Jeep®

TECHNICAL SERVICE MANUAL

FOREWORD

All information and specifications in this manual are based on the latest data available at the time of publication. Jeep Corporation reserves the right to discontinue models and change specifications or design without notice or incurring obligation.

Trade names mentioned in this manual are for convenience only and are not intended to be a recommendation to use a specific brand of product. They are indicative of a class or type and may be substituted by an equivalent product.

Proper service and repair are essential to the safe and reliable operation of a motor vehicle. This manual contains recommended methods for performing proper service and repair. Use of improper methods could cause personal injury and render the vehicle unsafe.

Detailed descriptions of standard workshop safety procedures are not included in this manual. This manual does contain WARNINGS for some service procedures that could cause personal injury, and CAUTIONS for some procedures that could damage the vehicle or its components. Please understand that these WARNINGS and CAUTIONS do not cover all conceivable ways which service might be done or all possible hazardous consequences of each conceivable way. Anyone using service procedures or tools (whether or not recommended by Jeep Corporation) must satisfy himself that neither personal nor vehicle safety will be jeopardized by the procedures or tools selected.

Jeep, CJ, Scrambler, Cherokee, and Wagoneer are registered trademarks of Jeep Corporation.

®, AMC are registered trademarks of American Motors Corporation.

In Canada, American Motors (Canada) Inc. is a licensed user.

PART 2
CHASSIS

CHAPTER INDEX

CLUTCH 2A

SECTION INDEX

GENERAL INFORMATION

GENERAL

Six- and Eight-Cylinder Models

The clutch assembly used in eight-cylinder Cherokee, Wagoneer and Truck models consists of a single dry-disc driven plate and a spring and lever-type clutch cover (fig. 2A-1). Two clutch cover styles are used. An 11.0-inch (27.9 cm) diameter semi-centrifugal cover is used on Cherokee, Wagoneer and Truck models with an eight-cylinder engine. An 10.5-inch (26.7 cm) diameter diaphragm-type clutch cover is used on six-cylinder CJ, Scrambler, Cherokee, Wagoneer and Truck models.

Four-Cylinder CJ and Scrambler Models

The clutch assembly used in four-cylinder CJ and Scrambler models consists of a diaphragm-type clutch cover and a single dry-disc driven plate. The cover consists of a one-piece diaphragm spring with integral release fingers (fig. 2A-2). The driven plate consists of a steel hub with four integral cushion springs and the friction material which is riveted to the hub (fig. 2A-3). The clutch cover and driven plate diameter is 9.250 inches (23.5 cm).

Clutch Hydraulic System—Four-Cylinder CJ and Scrambler Models

A hydraulic-clutch operating system is used on CJ and Scrambler models equipped with the 2.5 liter four-cylinder engine (fig. 2A-4). The system consists of a clutch cylinder, a slave cylinder, and an interconnecting hydraulic line. The clutch cylinder is mounted on the dash panel next to the brake master cylinder. The slave cylinder is mounted on the clutch housing. The clutch cylinder is connected directly to the clutch pedal. The slave cylinder is connected to the throwout lever.

Clutch Hydraulic System Operation

When the clutch pedal is pressed down, hydraulic fluid from the clutch cylinder flows into the slave cylinder causing the slave cylinder push rod to extend. Since the push rod is connected to the throwout lever, the lever moves the throwout bearing into contact with the clutch cover release fingers to disengage the clutch.

NOTE: *On four-cylinder CJ and Scrambler models with the clutch hydraulic operating system, the clutch pedal must be fully depressed before complete clutch disengagement will occur.*

Clutch Hydraulic Fluid

The hydraulic fluid that operates the clutch hydraulic mechanism is contained in the clutch cylinder reservoir. When adding fluid to, or refilling the system after service operations, use AMC/Jeep brake fluid, or equivalent, marked SAE J-1703 or DOT 3 only. Do not use any type of mineral or paraffin base oils in the system. These fluids will damage the rubber parts in the clutch and slave cylinders.

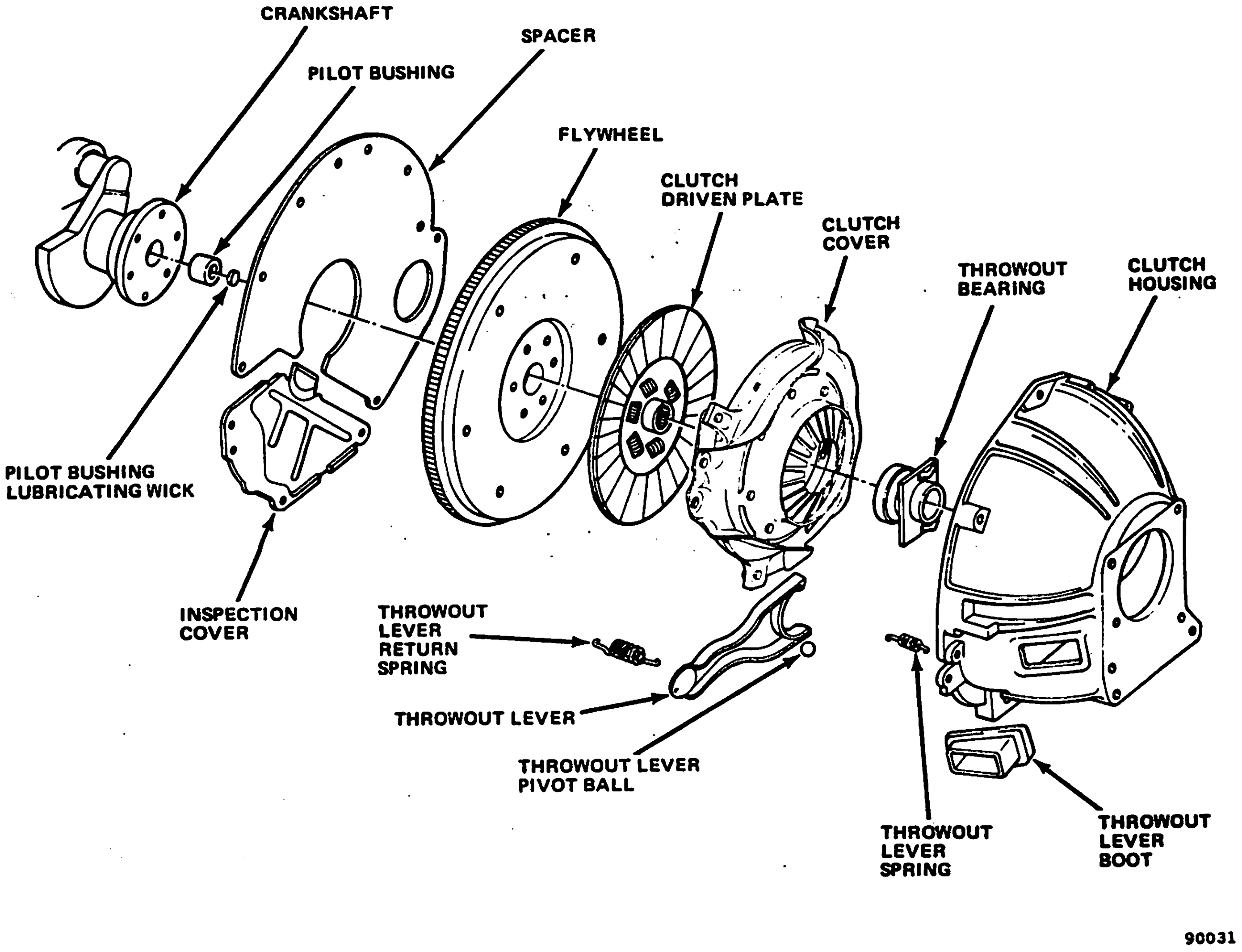

Fig. 2A-1 Clutch Assembly—Six- and Eight-Cylinder Models

Clutch Hydraulic Fluid Level

The desired fluid level is indicated on the side of the clutch cylinder. When refilling the system, fill the cylinder reservoir to the level indicated on the side of the reservoir only. Do not overfill the reservoir.

Throwout Bearing

CJ and Scrambler models equipped with the 2.5 liter four-cylinder engine use a throwout bearing that is similar to the bearing used on six-cylinder CJ and Scrambler, and six- and eight-cylinder Cherokee, Wagoneer and Truck models. The four-cylinder throwout bearing contact face is slightly crowned. The six- and eight-cylinder throwout bearing contact face is flat.

CLUTCH SERVICE

On four-cylinder CJ and Scrambler models, the components that form the clutch hydraulic system are fully serviceable. Refer to the Clutch Service—Four-Cylinder CJ and Scrambler Models section for all necessary service procedures.

On all models the clutch cover, driven plate and throwout bearing are serviced as assemblies only. Do not attempt to disassemble any of these components to effect repairs. If any of these components are damaged or severely worn, replace the component as an assembly only.

SERVICE DIAGNOSIS

General

Clutch problems can generally be assigned to one of the following categories defined as:

- Clutch chatter
- Clutch slippage or inadequate clutch pedal free play
- Clutch drag or inadequate clutch release
- Clutch pedal pulsation
- Clutch-related vibration
- Clutch area noises

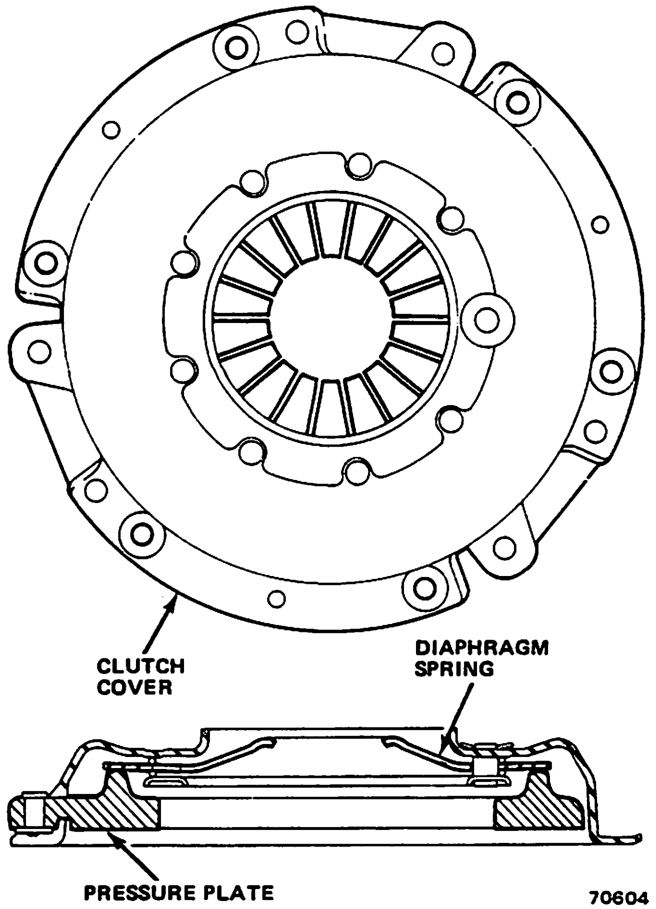

Fig. 2A-2 Clutch Cover—Four-Cylinder CJ and Scrambler Models

Each category is described in common complaint language and followed by simplified diagnosis and repair procedures.

NOTE: *Before performing any of the following diagnosis and repair procedures, adjust pedal free play on vehicles with six- and eight-cylinder engines and be sure the clutch pedal returns to the pedal stop completely. On four-cylinder CJ and Scrambler models, check the hydraulic cylinders and connecting line for damage and leakage.*

Clutch Chatter

Clutch chatter can be described as a shaking or shuddering sensation felt throughout the vehicle. Chatter usually develops when the clutch cover pressure plate makes initial contact with the driven plate and ceases when the clutch is fully engaged (clutch pedal released). Check clutch operation as follows:

WARNING: *The following test requires clutch engagement to the point of vehicle movement. Do not allow anyone to stand at the front or rear of the vehicle during this test.*

(1) Start engine, press clutch pedal to floor and shift transmission into first gear.

(2) Increase engine speed to 1200/1500 rpm and slowly release clutch pedal. When pressure plate makes initial contact with driven plate, note clutch operation. Press clutch pedal to floor and release accelerator pedal.

(3) Shift transmission into reverse and repeat procedure outlined in step (2).

(4) If clutch chatter does not develop in either gear range, increase engine speed to 1700/2200 rpm and repeat steps (2) and (3).

(5) If clutch chatter does not develop after performing tests outlined in steps (1) through (4), problem may be improper operation by owner. If clutch chatter does develop, proceed to next step.

(6) Raise vehicle on hoist.

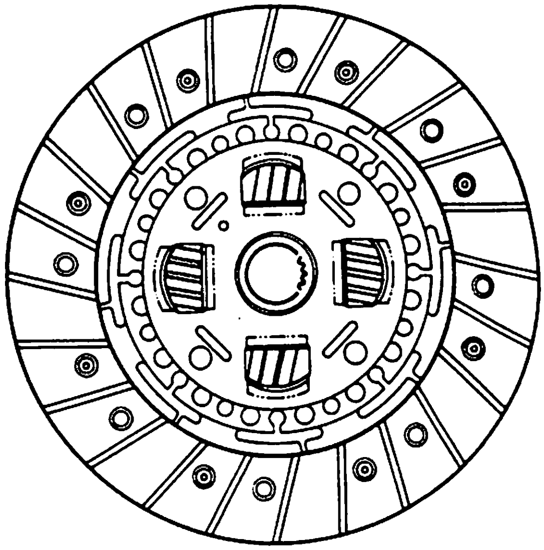

Fig. 2A-3 Clutch Driven Plate—Four-Cylinder CJ and Scrambler Models

(7) Check for loose or broken front or rear engine support cushions. Tighten or replace as necessary. Check for loose clutch housing-to-engine or housing adapter-to-transmission attaching bolts. Tighten as necessary. Refer to torque specifications in this section. Check for binding, worn, bent or broken clutch linkage components. Lubricate or replace as necessary.

(8) If components inspected are in good condition, proceed to next step. If one or more problems were discovered and corrected, lower vehicle and repeat step (1). If chatter is still evident, proceed to next step.

(9) Remove transmission and clutch components as outlined in this chapter.

NOTE: *Whenever the clutch components are removed, also remove the pilot bushing lubricating wick, soak the wick in engine oil and reinstall the wick before assembly.*

(10) Check for oil or grease contamination of driven plate. If contaminated, correct cause of contamination and replace driven plate.

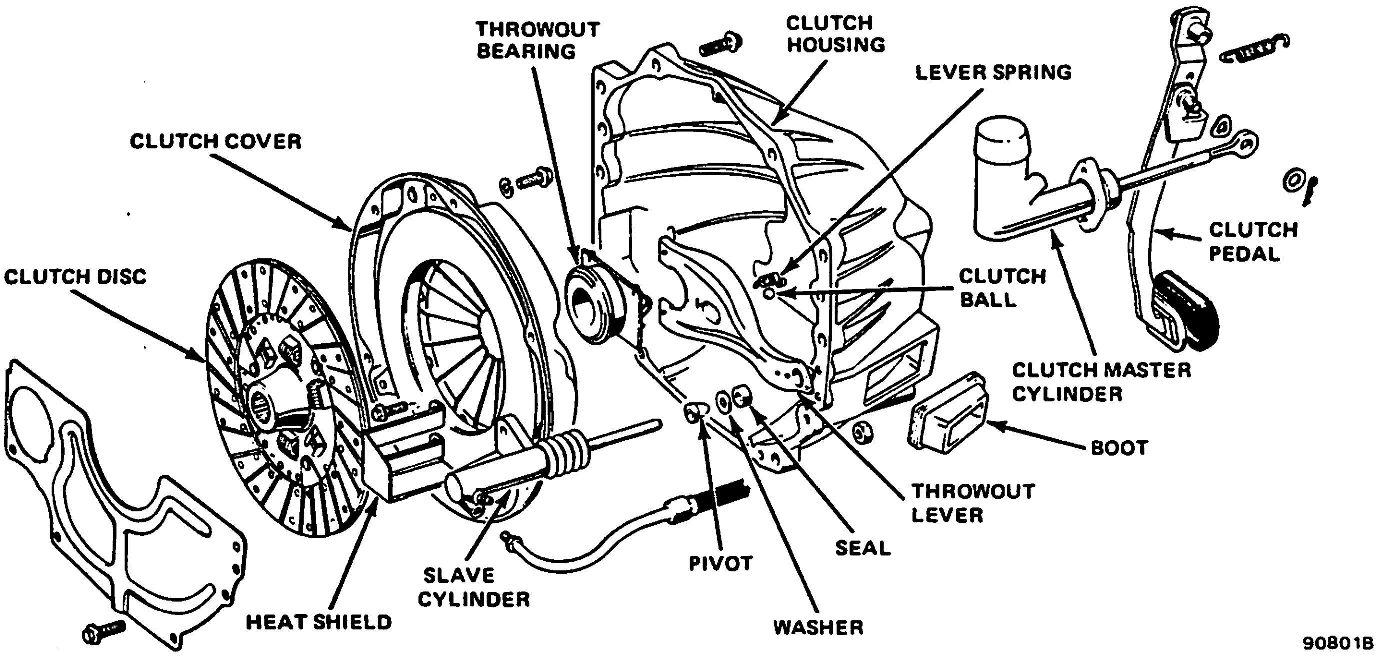

Fig. 2A-4 Clutch Assembly—Four-Cylinder CJ and Scrambler Models

(11) Check clutch cover for broken or collapsed apply springs and inspect surface of pressure plate for deep scoring, cracks, heat checking, or warping (check surface with straightedge). Replace clutch cover if it exhibits any of these conditions. Do not replace clutch cover if cover is in good condition.

(a) Clean oil and dirt from cover with mineral spirits and allow to air dry.

(b) Sand pressure plate surface lightly with fine emery cloth.

(c) Lubricate release lever pivots and check release lever height. Adjust height if necessary.

CAUTION: *Apply lubricant to pivots sparingly. Excessive lubrication could result in grease contamination of the pressure plate and driven plate surfaces.*

(12) Inspect crankshaft pilot bushing. Replace bushing if worn, deeply scored, or discolored.

NOTE: *Soak replacement bushing in engine oil before installation.*

(13) Inspect condition of splines on transmission clutch shaft and in driven plate hub. If splines are worn, galled, chipped or broken, replace clutch shaft or driven plate. Remove corrosion, rust, or burrs from splines using oilstone or fine-tooth file. Install driven plate on clutch shaft. Plate must move freely on shaft.

(14) If all clutch components are in good condition, proceed to next step. If one or more components were determined to be faulty, repair as necessary and proceed to next step.

(15) Check clutch housing alignment as outlined in this chapter. Correct alignment if necessary and proceed to next step.

(16) Apply thin film of chassis lubricant to transmission clutch shaft splines. Do not apply lubricant to shaft pilot hub.

(17) Install pilot bushing lubricating wick and install clutch components and transmission. Refer to Clutch Installation.

NOTE: *Do not replace the throwout bearing unless it is defective or damaged. Refer to Clutch Area Noises.*

Clutch Slippage Or Inadequate Clutch Linkage Free Play

Clutch slippage can be described as a condition in which the engine overspeeds but does not generate any increase in torque supplied to the wheels. Clutch slippage occurs when the driven plate is not gripped firmly between the flywheel and clutch cover pressure plate and rotates or slips between them at high torque. Clutch slippage can occur during initial acceleration or during subsequent shifts. Check clutch operation as follows:

(1) Block wheels and apply parking brake.

(2) Operate engine until it reaches normal operating temperature.

(3) Shift transmission into third gear and increase engine speed to 2000 rpm.

WARNING: *Do not permit anyone to stand in front of the vehicle during this test.*

(4) Slowly release clutch pedal until clutch is fully engaged.

CAUTION: *Do not allow the clutch to be engaged for more than 5 seconds at a time as the clutch components could be damaged.*

(5) If engine stalls within 5 seconds, clutch is not defective. If engine continues to run, proceed to next step.

(6) Raise vehicle on hoist. Check clutch linkage for binding, worn, broken, or bent components. Lubricate or replace as necessary. If all components inspected are in good operating condition, proceed to next step.

(7) If one or more problems were discovered and corrected during inspection in previous step, repeat steps (1) through (4). If clutch slippage is corrected, stop repair. If slippage persists, proceed to next step.

(8) Remove transmission and clutch components. Refer to Clutch Removal.

NOTE: *Whenever the transmission is removed, also remove the pilot bushing lubricating wick, soak the wick in engine oil, and reinstall the wick before assembly.*

(9) Inspect driven plate. If 1/16 inch (2 mm) or less friction material remains above rivet heads, or plate is severely glazed or contaminated with oil or grease, replace driven plate.

NOTE: *If the driven plate is contaminated, determine the cause and make correction before proceeding.*

(10) Inspect clutch cover. If cover is heat-checked, has broken or collapsed springs, or exhibits signs of overheating (e.g., has blue coloration), replace cover. If cover does not exhibit any of these conditions, do not replace it.

(a) Clean oil and dirt from cover using mineral spirits and allow cover to air dry.

(b) Sand pressure plate surface lightly using fine emery cloth.

(c) Lubricate cover release lever pivots and check and adjust release lever height as necessary.

CAUTION: *Apply lubricant to the pivots sparingly. Excessive lubrication could result in grease contamination of the driven plate and pressure plate surfaces.*

(11) Check throwout bearing mounting surface of transmission front bearing cap for galling, deep scores, or roughness. Install throwout bearing on bearing cap and check for smooth fore/aft movement. Replace bearing or bearing cap as necessary if bind occurs. Fill throwout bearing groove with chassis grease and apply thin coat of grease to bearing mounting surface of front bearing cap.

CAUTION: *The throwout bearing has retaining springs which position the bearing on the throwout lever. Check these springs for distortion, loss of tension, or for being bent or broken. Replace the bearing if these springs are damaged.*

NOTE: *Do not replace the throwout bearing unless it is actually defective or damaged. Refer to Clutch Area Noises.*

(12) Apply thin film of chassis grease to transmission clutch shaft splines. Do not apply grease to shaft pilot hub.

(13) Install pilot bushing and lubricating wick.

(14) Install clutch components and transmission. Refer to Clutch Installation.

(15) Lower vehicle.

Clutch Drag Or Inadequate Release

Clutch drag can be described as a condition in which the clutch driven plate, and consequently the transmission clutch shaft, does not come to a complete stop after the clutch pedal is depressed (clutch disengaged). Clutch drag can cause gear clash when shifting into reverse or hard or difficult shifting. Check clutch operation as follows.

NOTE: *Occasionally, the clutch driven plate and clutch shaft will require approximately 5 seconds to lose momentum and come to a complete stop after initial clutch disengagement. This is normal and should not be mistaken for clutch drag.*

(1) Start engine, depress clutch pedal fully, and shift transmission into first gear.

(2) Shift transmission into neutral but **do not** release clutch pedal.

(3) Wait 5 to 10 seconds and shift transmission into reverse. If shift is smooth with no gear clash, clutch operation is normal. If shifting into reverse produces gear clash, proceed to next step.

(4) Raise vehicle on hoist. Check clutch linkage for binding, worn, broken or bent components. Lubricate or replace as necessary. If components are in good operating condition, proceed to next step. If one or more problems were discovered and repaired, lower vehicle and repeat steps (1) through (3). If clutch now operates correctly, stop repair. If clutch drag persists, proceed to next step.

(5) Remove transmission and clutch components. Refer to Clutch Removal.

NOTE: *Whenever the transmission is removed, also remove the pilot bushing lubricating wick, soak the wick in engine oil, and reinstall the wick before assembly.*

(6) Observe wear pattern on driven plate. If wear pattern is uneven (e.g., two areas heavily worn on one side, two only partially worn on opposite side), or has opposing wear patterns on front and reverse side, the driven plate is warped and should be replaced.

(7) Inspect clutch cover assembly. If clutch cover assembly has worn, bent, or broken release levers or lever pivots, is heavily scored, or warped, replace clutch cover assembly. If cover assembly does not exhibit any of these conditions, do not replace it.

(a) Clean oil and dirt from clutch cover with solvent and allow cover to air dry.

(b) Sand pressure plate surface lightly using fine emery cloth.

(c) Lubricate cover release lever pivots with chassis grease.

NOTE: *Apply lubricant to pivots sparingly. Excessive lubricant could result in grease contamination of pressure plate and driven plate surfaces.*

(8) Check and adjust clutch cover release lever height as necessary.

NOTE: *If the release lever height cannot be adjusted, the release lever(s) are bent. Replace the clutch cover.*

(9) Inspect crankshaft pilot bushing for heavy scoring, angular wear pattern, or discoloration. Replace as necessary. Be sure to soak bushing in engine oil before installation.

NOTE: *If the pilot bushing displays an angular-type wear pattern, check and correct clutch housing alignment before proceeding. Refer to Clutch Housing Alignment.*

(10) Inspect condition of splines on transmission clutch shaft and in driven plate hub. If severely worn, galled, or corroded, replace clutch shaft or driven plate. Corrosion, rust, or burrs can be removed from splines using an oilstone or fine-tooth file. Install driven plate on clutch shaft. Driven plate must move freely on shaft.

(11) If components inspected in previous steps are in good condition, proceed to next step. If one or more problems were discovered during inspection procedure, repair as necessary and proceed to next step.

(12) Check clutch housing alignment. Refer to Clutch Housing Alignment. Correct alignment if necessary and proceed to next step.

(13) Apply thin film of chassis grease to transmission clutch shaft splines. Do not apply grease to shaft pilot hub.

(14) Install pilot bushing lubricating wick.

(15) Install transmission and clutch components. Refer to Clutch Installation.

(16) Lower vehicle.

NOTE: *Do not replace the throwout bearing unless actually defective. Refer to Clutch Area Noises.*

Clutch Pedal Pulsation

Clutch pedal pulsation can be described as a rapid up-and-down or pumping-type movement of the pedal that is not accompanied by any noise. In most cases, pedal movement is slight and cannot be observed but can be felt by the driver. However, on occasion, pedal movement will be great enough to be visually observed and cause a noticeable vibration.

Clutch pedal pulsation occurs when the throwout bearing makes initial contact with the clutch cover release levers (clutch partially disengaged), or at any time the bearing is in contact with the release levers. Pulsation is usually caused by incorrect clutch release lever height or clutch housing misalignment. Check clutch operation as follows.

(1) Start engine, slowly depress clutch pedal until throwout bearing makes initial contact with clutch release levers, and check for pulsation.

NOTE: *Some minor pulsation is normal.*

(2) Continue to depress clutch pedal while checking for pulsation until pedal is fully depressed.

(3) If pulsation is not evident or is minor, stop repair. If pulsation is very rapid and can be felt throughout vehicle, refer to Clutch-Related Vibrations. If vehicle displays pulsation symptoms, proceed to next step.

(4) Remove transmission and clutch components. Refer to Clutch Removal.

(5) Remove pilot bushing lubricating wick and soak wick in engine oil.

(6) Inspect clutch cover release levers. If levers are bent or excessively worn, replace clutch cover and proceed to step (8). If release levers are in good condition, clean oil and dirt from clutch cover assembly using mineral spirits, allow assembly to air dry and proceed to next step.

(7) Sand clutch cover pressure plate surface lightly using fine emery cloth.

(8) Lubricate clutch cover release lever pivots lightly with chassis grease.

NOTE: *Apply lubricant to the pivots sparingly. Excessive lubrication could result in grease contamination of the driven plate and pressure plate surface.*

(9) Check and adjust clutch cover release lever height if necessary.

NOTE: *If release lever height cannot be adjusted, the levers are bent and the cover must be replaced.*

(10) Check clutch housing alignment. Refer to Clutch Housing Alignment. Correct alignment if necessary and proceed to next step.

(11) Apply thin film of chassis grease to transmission clutch shaft splines but do not apply grease to shaft pilot hub.

(12) Install pilot bushing lubricating wick.

(13) Install clutch components and transmission. Refer to Clutch Installation.

Clutch Related Vibrations

Clutch related vibrations differ from pedal pulsations in frequency and magnitude. They usually occur at relatively high engine speeds (over 1500 rpm), are not affected by clutch pedal position, and can be felt throughout the vehicle.

Although clutch related vibrations are usually caused by clutch component imbalance, this condition occurs very infrequently because the clutch cover and driven plate are balanced as a unit during assembly. At this time, the cover and plate are installed on the crankshaft/flywheel assembly and given a final fine-tune balance before installation in the vehicle.

Replacement of clutch components to correct vibrations should be performed only after exhausting all other possibilities. Check clutch operation as follows.

(1) Raise vehicle on hoist and check engine front support cushion interlocks for grounding. Repair as necessary. Check other engine components (e.g., exhaust manifold, valve cover, etc.) for grounding on body or frame. If one of these components is grounded, repair and check for vibration. If vibration ceases, stop repair. If vibration continues, lower vehicle and proceed to next step.

(2) Disconnect accessory drive belts one at a time, start engine, and check for vibration. If vibration stops after removal of a drive belt, cause of vibration is related to accessory driven by belt or by belt itself. Repair as necessary. If vibration persists after checking all belts and accessories, proceed to next step.

(3) Raise vehicle on hoist and remove transmission and clutch housing. Refer to Clutch Removal.

(4) Support engine firmly.

(5) Check for loose flywheel mounting bolts. Tighten bolts to 105 foot-pounds (142 N•m) torque if necessary and operate engine. If vibration ceases, stop repair. If vibration is still evident, proceed to next step.

(6) Check flywheel face runout while holding crankshaft end play to zero. If runout is 0.005 inch (0.12 mm) or less, proceed to next step. If runout exceeds 0.005 inch (0.12 mm), replace flywheel and operate engine. If vibration ceases, stop repair. If vibration is still evident, proceed to next step.

(7) Check for damaged crankshaft vibration dampener. If dampener is in good condition, proceed to next step. If dampener is damaged, replace dampener and operate engine. If vibration ceases, stop repair. If vibration is still evident, proceed to next step.

(8) Check clutch cover imbalance as follows:

(a) Remove clutch cover and driven plate from flywheel.

(b) Start and operate engine at speed where vibration occurred.

(c) If vibration ceases, replace clutch cover and recheck operation. If now OK, install clutch housing and transmission. Refer to Clutch Installation.

(9) Lower vehicle.

Clutch Noises

Throwout Bearing Noise

Throwout bearing noises can be described as whirring, grating, or grinding noises that occur when the clutch pedal is depressed (clutch disengaged). These noises usually continue until the clutch pedal is fully released (clutch engaged) and the bearing is no longer in contact with the clutch cover release levers.

Throwout bearing noise is corrected by replacing the bearing as outlined in this chapter.

NOTE: *The throwout bearing should not be replaced as a matter of course when servicing the clutch cover or driven plate. Replace the bearing only if defective.*

Transmission Clutch Shaft or Countershaft Bearing Noise

Transmission clutch shaft or countershaft bearing noises can be described as whirring, grating, or grinding noises which cease when the clutch pedal is depressed (clutch disengaged) or when the transmission is shifted into gear. These noises are most noticeable when the clutch pedal is fully released and the transmission is in neutral. Correction of these noises will require transmission removal and replacement of the problem bearing(s).

Crankshaft Pilot Bushing Noise

Pilot bushing noises can be described as squealing, howling, or elephant-type trumpeting noises which are most noticeable when the engine is cold. These noises occur during the first few inches of clutch pedal travel as the pedal is being released (partial clutch engagement) with the transmission in gear. It can also occur in very cold weather when the pedal is fully depressed (clutch disengaged) and the engine is started with the transmission in neutral. To correct pilot bushing noise, replace bushing as outlined in this section.

CLUTCH ADJUSTMENTS

Four-Cylinder CJ and Scrambler Models

The clutch hydraulic mechanism is self-adjusting. Free play adjustments are not required nor is there any provision for such an adjustment.

Six- and Eight-Cylinder Models

There are two clutch adjustments required: clutch pedal free play and clutch cover release lever height.

Clutch pedal freeplay should be checked and adjusted at the intervals specified in the Mechanical Maintenance Schedule, Chapter B, or whenever diagnosis indicates adjustment is needed. Refer to Clutch Pedal Free Play Adjustment in this section.

Clutch cover release lever height should be checked and adjusted whenever the cover is removed or replaced during service operations, or whenever diagnosis indicates adjustment is needed. Refer to the Clutch Service—Six- and Eight-Cylinder Models section in this chapter.

Clutch Pedal Free Play Adjustment

(1) Lift clutch pedal upward and against pedal stop (fig. 2A-1).

(2) Raise vehicle.

(3) On Cherokee, Wagoneer and Truck models, adjust clutch push rod lower ball pivot assembly in-or-out on push rod (fig. 2A-5) until bellcrank inner lever is parallel to front face of clutch housing. Lever should be slightly forward from vertical.

(4) On all models, loosen release rod adjuster jamnut.

(5) Turn release rod adjuster in or out to obtain specified clutch pedal free play.

(6) Tighten release rod jamnut.

(7) Lower vehicle.

CLUTCH LINKAGE

The suspended-type clutch pedal is connected to the throwout lever through the clutch push rod, bellcrank outer and inner levers, and release rod (figs. 2A-5 and 2A-6). The throwout bearing is mounted on the transmission front bearing cap and acts directly against the clutch cover release levers to engage and disengage the clutch. The bearing is actuated by a throwout lever mounted in the clutch housing. The lever pivots on a steel ball mounted inside the clutch housing.

The bellcrank pivots on ball studs mounted in the inner and outer support brackets (figs. 2A-5 and 2A-6). Idler bushings, installed in each end of the bellcrank provide bearing surfaces for the ball studs.

Clutch Linkage Lubrication

The clutch linkage ball studs are the only linkage components that require periodic lubrication. The studs should be lubricated at the intervals specified in the Mechanical Maintenance Schedule, Chapter B.

Lubrication Procedure

The bellcrank has a lubrication fitting to facilitate ball stud lubrication. Whenever lubrication is necessary, proceed as follows:

(1) Raise vehicle.

(2) Fill lube gun with lithium-base chassis grease.

(3) Connect lube gun nozzle to bellcrank fitting and lubricate ball studs.

(4) Remove lube gun and lower vehicle.

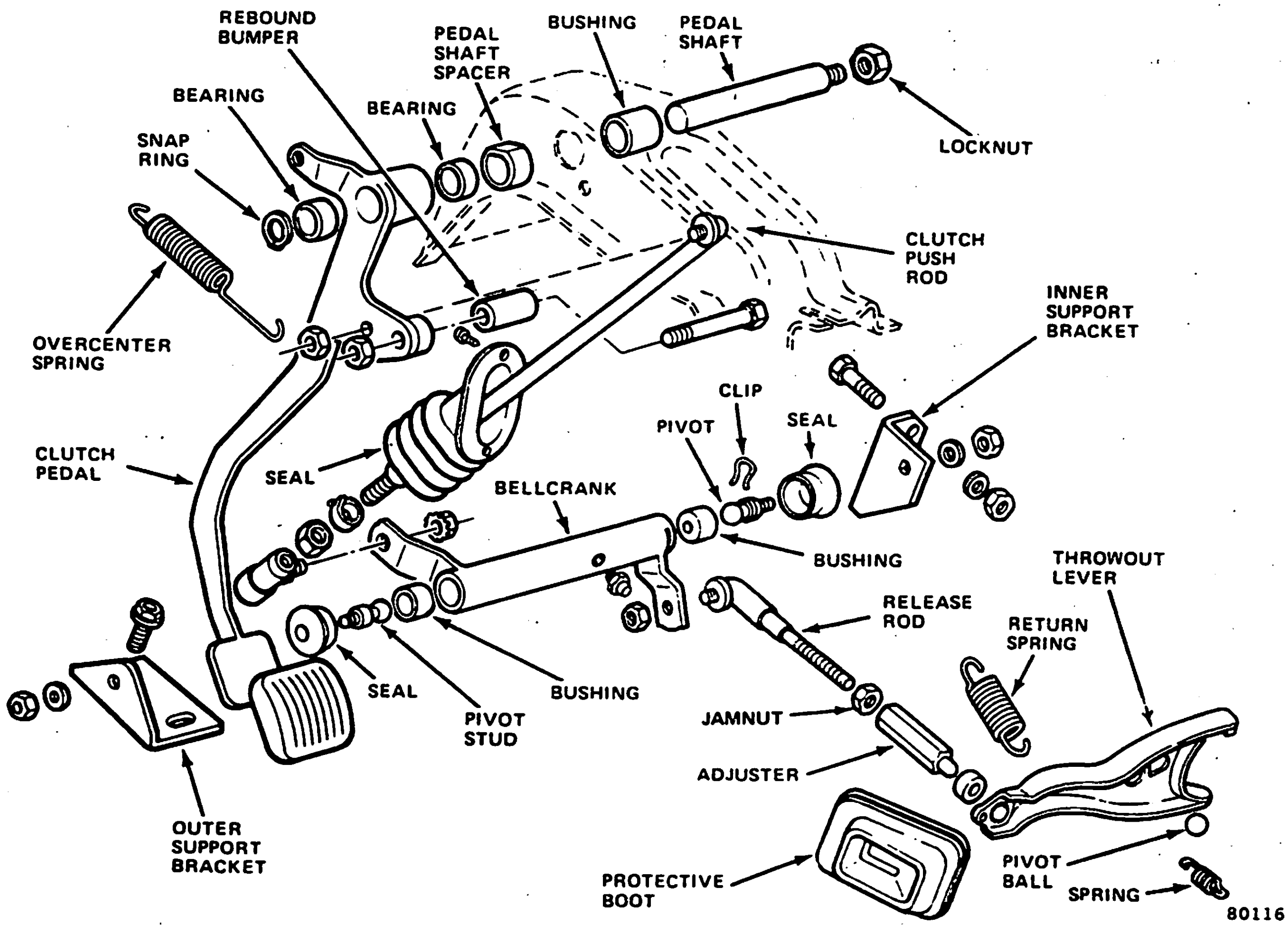

Fig. 2A-5 Clutch Linkage—Cherokee and Truck Models

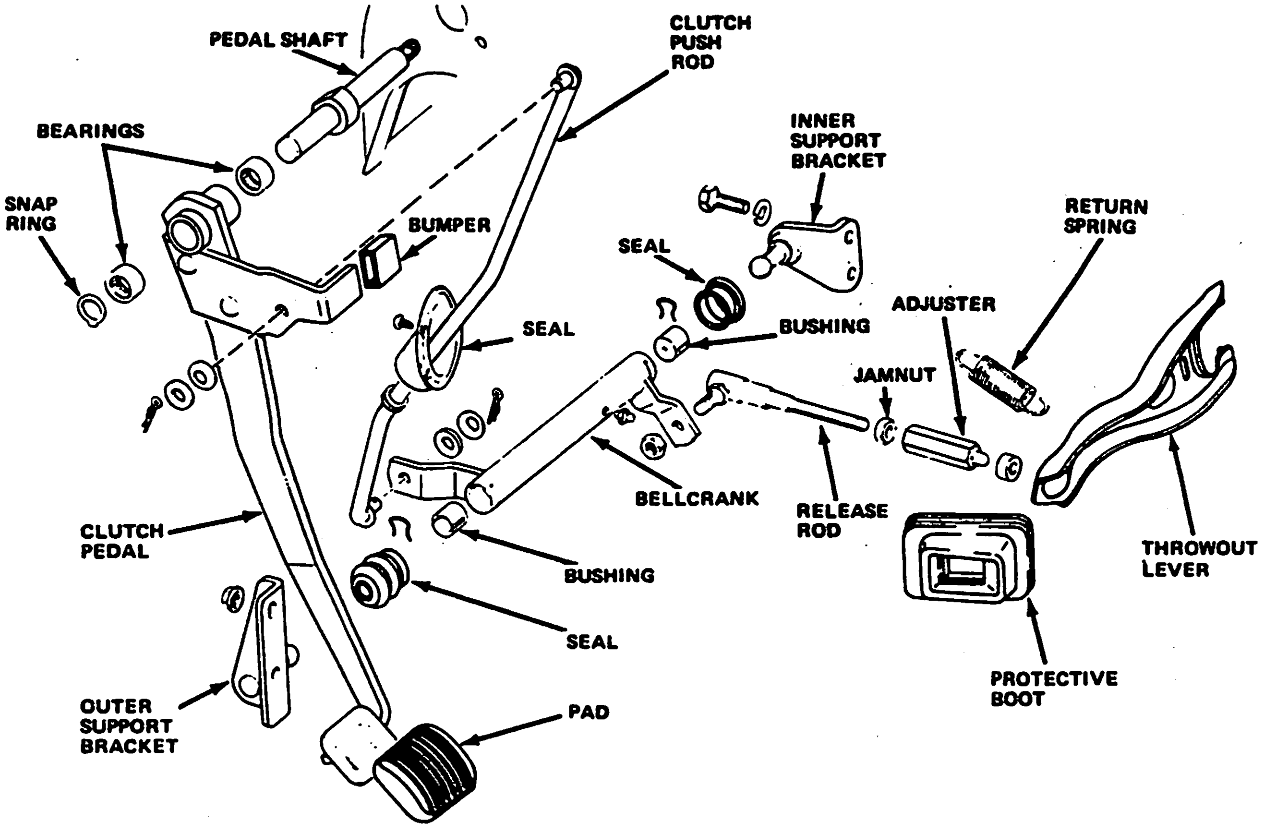

Fig. 2A-6 Clutch Linkage—Six-Cylinder CJ and Scrambler Models

CLUTCH SERVICE— FOUR-CYLINDER CJ-SCRAMBLER MODELS

CLUTCH REMOVAL

(1) Remove screws attaching transmission shift lever boot to floorpan and slide boot upward on lever.

(2) Remove bolts attaching transmission shift lever housing to transmission (fig. 2A-7). Lift shift lever and housing upward and secure assembly to floorpan with wire.

(3) Raise vehicle.

(4) Mark rear propeller shaft and transfer case yoke for assembly alignment reference.

(5) Disconnect rear propeller shaft at transfer case. Move shaft aside and secure to underbody.

(6) Position safety stand under engine to support engine.

(7) Remove bolts/nuts attaching rear crossmember to frame rails and rear support cushion and remove crossmember.

Fig. 2A-7 Shift Lever Removal—Models T-4, T-5

(8) Remove bolts attaching slave cylinder to clutch housing. Disengage cylinder push rod from throwout lever and move cylinder aside. Secure cylinder to underbody with wire, if necessary.

(9) Drain transfer case and disconnect speedometer cable.

(10) Disconnect backup lamp switch wire.

(11) Disconnect parking brake cable, if necessary.

(12) Disconnect transfer case vent hose at transfer case and disconnect 4WD indicator switch wire.

(13) Remove starter motor.

(14) Mark front propeller shaft and transfer case yoke for assembly alignment reference.

(15) Disconnect front propeller shaft from transfer case yoke. Move shaft aside and secure to underbody with wire.

(16) Remove transfer case shift lever as follows: Remove shifter shaft retaining nut. Remove cotter pins that retain shift control link pins in shift rods and remove pins. Remove shifter shaft and disengage shift lever from shift control links. Slide lever upward in boot to move lever out of way.

NOTE: *On some models, the shifter shaft is threaded into the shift lever and must be unthreaded to remove it. On other models, the shaft is removed simply by sliding it out of the lever.*

(17) Support transmission-transfer case assembly with transmission jack. Use safety chain to secure assembly on jack.

(18) Remove bolts attaching transmission to clutch housing and remove transmission-transfer case assembly.

(19) Remove throwout bearing from throwout lever.

(20) Remove bolts attaching clutch housing to engine and remove clutch housing.

(21) Mark position of clutch cover on flywheel for assembly alignment reference.

(22) Loosen clutch cover attaching bolts one or two turns at a time and in rotation to relieve spring tension on cover.

CAUTION: *The clutch cover bolts must be loosened evenly and in rotation to avoid distorting the cover. The cover is a steel stamping and could be warped if removed improperly. If warped, the cover will cause clutch chatter after assembly.*

(23) Remove clutch cover bolts and remove cover and driven plate from flywheel.

(24) Remove pilot bushing lubricating wick from bushing bore in crankshaft and soak wick in clean engine oil.

(25) Remove bolts attaching transfer case to transmission adapter housing and remove transfer case from transmission.

CLUTCH INSTALLATION

(1) Install pilot bushing lubricating wick.

(2) Insert Clutch Alignment Tool J-5824-01 in driven plate hub and position plate on flywheel. Be sure alignment tool is fully seated in pilot bushing.

NOTE: *Be sure the driven plate side marked flywheel side is positioned against the flywheel.*

(3) Position clutch cover on flywheel and over driven plate.

(4) Align driven plate and clutch cover using alignment tool and install cover attaching bolts finger-tight only.

(5) Tighten clutch cover bolts alternately and evenly to 23 foot-pounds (31 N•m) torque.

CAUTION: *To avoid warping the clutch cover, tighten the cover attaching bolts a few turns at a time only.*

(6) Install clutch housing on engine and install housing attaching bolts. Tighten bolts to 54 foot-pounds (73 N•m) torque.

(7) Install throwout bearing in throwout lever. Center bearing over clutch cover release fingers.

(8) Shift transmission into gear using long handle screwdriver.

(9) Install transmission. Be sure to align transmission clutch shaft and driven plate splines before installation.

(10) Install and tighten transmission-to-clutch housing bolts to 54 foot-pounds (73 N•m) torque.

(11) Install transfer case on transmission. Raise transfer case using transmission jack. Align transmission output and transfer case input shaft splines by rotating output shaft yoke.

(12) Install and tighten transfer case attaching bolts to 30 foot-pounds (41 N•m) torque, and remove transmission jack.

(13) Position transfer case shift lever and shifter shaft. Install shaft retaining nut and tighten nut securely.

(14) Install transfer case shift control link assembly and install link retaining pins through links and shift rods. Use new cotter keys to retain link pins. Be sure shift lever is properly aligned in control link assembly.

(15) Connect vent hose to transfer case vent.

(16) Connect backup light switch and 4WD indicator switch wires.

(17) Connect speedometer cable to transfer case.

(18) Connect front and rear propeller shafts to transfer case yokes. Be sure to align shafts and yokes using assembly reference marks made previously. Tighten U-joint clamp strap bolts to 15 foot-pounds (20 N•m) torque.

(19) Install rear crossmember. Tighten crossmember attaching nuts to 30 foot-pounds (41 N•m) torque.

(20) Connect parking brake cable if cable was disconnected.

(21) Install slave cylinder on clutch housing. Be sure cylinder push rod is properly seated in throwout lever.

(22) Fill transfer case to correct level with specified lubricant. Refer to Chapter 2D.

(23) Remove stand used to support engine and lower vehicle.

(24) Install transmission shift lever assembly.

(25) Install screws attaching transmission shift lever boot to floorpan.

PILOT BUSHING REPLACEMENT

Removal

(1) Remove clutch assembly. Refer to Clutch Removal in this section.

(2) Obtain and lubricate replacement pilot bushing with engine oil.

(3) Remove pilot bushing lubricating wick and soak wick in engine oil.

(4) Remove old bushing using Tool J-5822 or, pack bushing bore with grease, insert clutch alignment tool into bushing, and tap tool with mallet. Hydraulic pressure of grease will force bushing out.

(5) Clean crankshaft bore if grease was used to remove old bushing.

Installation

(1) Install pilot bushing lubricating wick in bushing bore in crankshaft.

(2) Install replacement pilot bushing in crankshaft bushing bore using Clutch Alignment Tool J-5824-01.

CAUTION: *Do not allow the bushing to become cocked during installation. The bushing and installer tool must be kept parallel with the crankshaft centerline during installation.*

(3) Remove bushing installer tool.

(4) Install clutch, transmission, and transfer case assemblies. Refer to Clutch Installation in this section.

THROWOUT BEARING AND LEVER

Removal

(1) Remove transmission-transfer case assembly. Refer to Clutch Removal in this section.

(2) Remove throwout lever boot.

(3) Disconnect throwout lever spring (fig. 2A-5).

(4) Remove throwout lever and bearing as assembly.

(5) Remove throwout bearing from lever.

Installation

(1) Fill slots in inner groove of replacement throwout bearing with AMC/Jeep chassis lubricant, or equivalent.

(2) Position throwout lever on pivot ball in clutch housing and connect lever spring to lever.

(3) Install throwout lever boot.

(4) Install throwout bearing in lever. Be sure bearing retaining springs are engaged in lever.

(5) Install transmission-transfer case assembly. Refer to Clutch Installation in this section.

FLYWHEEL REPLACEMENT

Removal

(1) Remove clutch, transmission, and transfer case assemblies. Refer to Clutch Removal in this section.

(2) Remove bolts attaching flywheel to crankshaft flange and remove flywheel.

Installation

(1) Mount flywheel on crankshaft flange and install attaching bolts finger-tight.

(2) Tighten flywheel attaching bolts alternately and evenly to 65 foot-pounds (88 N•m) torque.

(3) Clean surface of replacement flywheel with alcohol to remove all traces of oil, grease, or other protective substances.

(4) Install clutch, transmission, and transfer case assemblies. Refer to Clutch Installation in this section.

TRANSMISSION CLUTCH SHAFT

If the transmission clutch shaft requires replacement, remove and disassemble the transmission and replace the shaft. Refer to Chapter 2B—Manual Transmission for the necessary service procedures.

CLUTCH HOUSING ALIGNMENT

The clutch housing alignment procedure for four-cylinder CJ models is the same as for six-cylinder models without transmission adapters. Refer to Clutch Housing Alignment—Alignment Check without Transmission Adapter in the Six- and Eight-Cylinder Model Clutch service section.

CLUTCH CYLINDER SERVICE

Removal

(1) Disconnect hydraulic line at clutch cylinder (fig. 2A-8). Use flarenut wrench to loosen and remove fitting as fitting hex may be damaged by open end wrench.

(2) Cap hydraulic line and cylinder opening to prevent dirt entry.

(3) Remove cotter pin and washer that retain cylinder push rod on clutch pedal and slide rod off pedal pivot.

(4) Remove nuts attaching clutch cylinder to mounting studs on dash panel and remove cylinder.

Disassembly

(1) Remove reservoir cap and rubber cover. Place cap and cover on clean, lint free paper or cloth.

NOTE: *It is not necessary to remove the rubber outer cover from the reservoir cap unless the cover is damaged.*

(2) Remove push rod dust cover. Use screwdriver to pry cover off cylinder. Discard cover after removal.

(3) Remove snap ring that retains push rod in cylinder. Use needlenose pliers to compress ends of snap ring and remove ring from cylinder bore. Discard snap ring after removal.

(4) Remove push rod, retaining washer and seal as assembly (fig. 2A-9). Remove and discard push rod seal.

(5) Remove plunger, valve spring, and valve stem assembly from cylinder bore (fig. 2A-9). Tap cylinder body lightly on wood block to dislodge assembly from bore.

(6) Compress valve spring slightly and pry tab of valve stem retainer upward to release retainer, spring, and stem assembly from plunger (fig. 2A-10).

NOTE: *The retainer tab is located in the rectangular slot in the side of the stem retainer (fig. 2A-10). Use a small, thin blade screwdriver to pry the tab upward.*

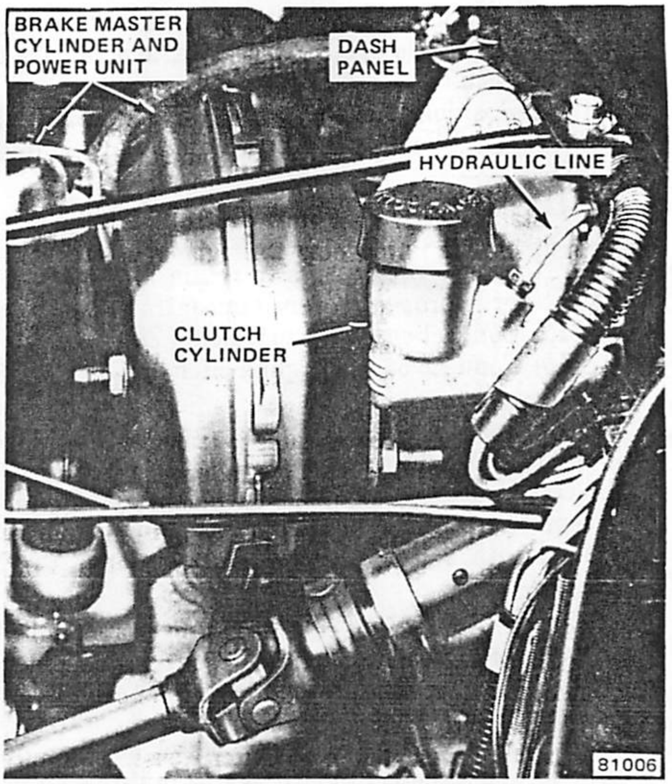

Fig. 2A-8 Clutch Cylinder Location

(7) Remove seal from plunger (fig. 2A-9). Discard seal after removal.

(8) Remove spring retainer and valve stem from valve spring.

(9) Remove valve stem from retainer and remove spring washer and stem tip seal from end of valve stem (fig 2A-9). Discard stem tip seal and spring washer.

(10) Clean all parts thoroughly with brake fluid or brake cleaning solvent only.

(11) Inspect cylinder bore for cracks, porosity, wear, deep scoring or nicks, and severe corrosion or pitting. If bore exhibits any of these conditions, replace cylinder.

Assembly

(1) Lubricate cylinder bore with brake fluid.

(2) Install replacement seals on plunger and valve stem. Be sure lip of plunger seal faces stem end of plunger. Also be sure stem tip seal is installed so that seal shoulder fits in undercut at end of valve stem.

(3) Install new spring washer on valve stem. Install plastic spring retainer on valve stem and over spring washer. Be sure large end of retainer is facing end of stem (fig. 2A-10).

(4) Install valve spring over stem and seat spring on stem retainer.

(5) Install assembled valve spring, retainer, and stem assembly on plunger (fig. 2A-10). Compress spring against plunger. When end of valve stem passes through

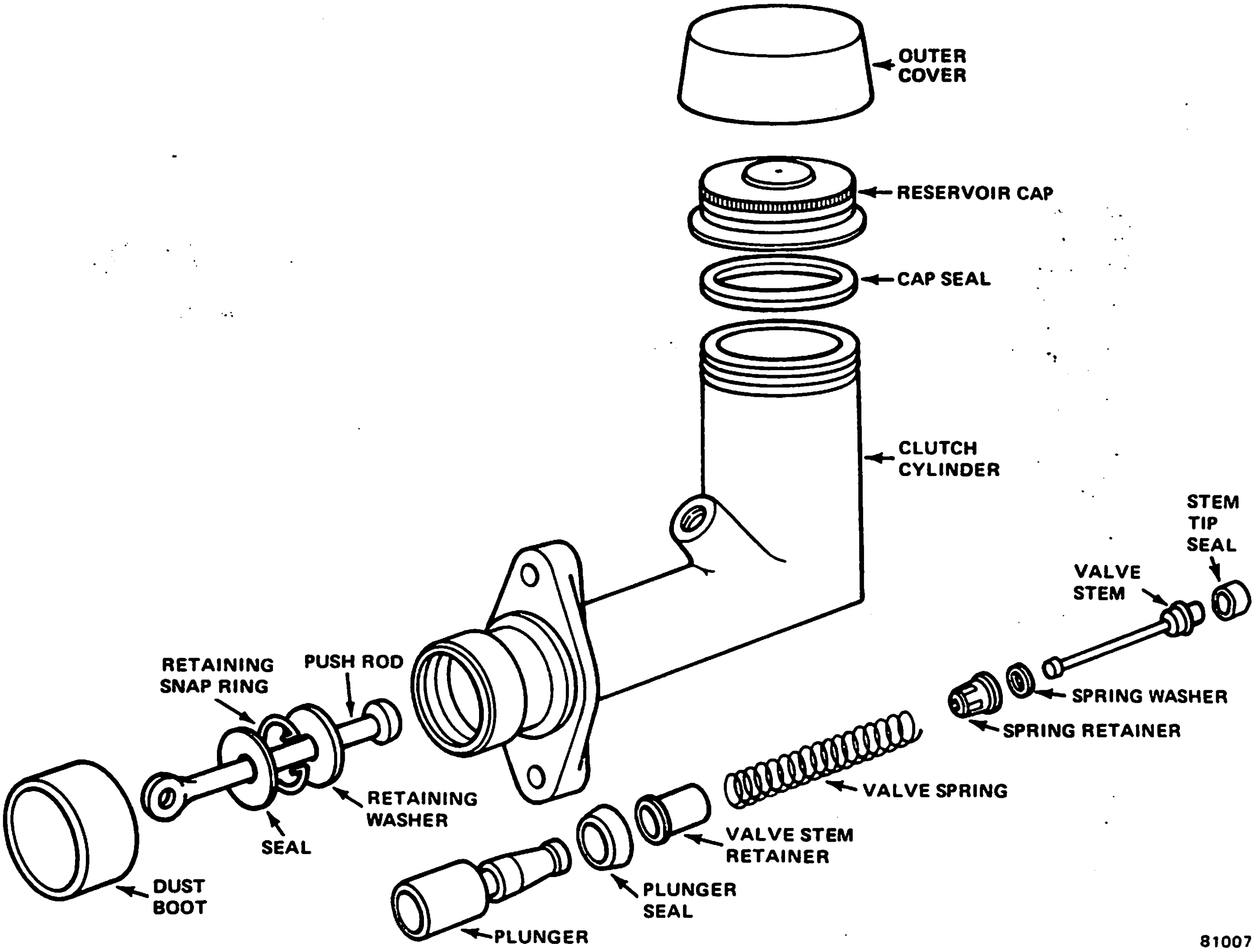

Fig. 2A-9 Clutch Cylinder Assembly

stem retainer and seats in small bore in end of plunger, bend retainer tab downward to lock stem and retainer on plunger.

(6) Lubricate spring and plunger assembly with brake fluid and insert assembly (spring end first) into cylinder bore.

(7) Install new seal and dust cover on push rod.

(8) Lubricate ball-end of push rod, seal, and lip of dust cover with lubricant supplied in cylinder overhaul kit.

(9) Insert push rod and push rod retainer into cylinder bore. Secure push rod and retainer in bore using replacement snap ring supplied in overhaul kit.

(10) Slide push rod seal up against push rod retainer and install dust cover on end of cylinder. Be sure cover lip is seated in undercut on end of cylinder.

(11) Remove and discard old seal from filler cap and install new seal supplied in kit.

(12) Install rubber outer cover on filler cap, if removed.

Installation

(1) Install clutch cylinder on dash panel mounting studs. Tighten cylinder attaching nuts to 11 foot-pounds (15 N•m) torque.

(2) Connect hydraulic line to clutch cylinder.

(3) Install cylinder push rod on clutch pedal pivot and install retaining washer and cotter pin.

(4) Fill clutch cylinder reservoir with brake fluid to level indicated on side of reservoir. Use AMC/Jeep brake fluid, or equivalent, marked SAE J-1703 or DOT 3 only to fill reservoir.

(5) Install reservoir cap and bleed clutch hydraulic system. Refer to Clutch Hydraulic System Bleeding.

SLAVE CYLINDER SERVICE

Removal

(1) Raise vehicle.

(2) Disconnect hydraulic line at cylinder.

(3) Remove throwout lever-to-cylinder push rod retaining spring.

(4) Remove bolts attaching cylinder to clutch housing and remove cylinder and heat shield, and throwout lever pivot, washer, and seal.

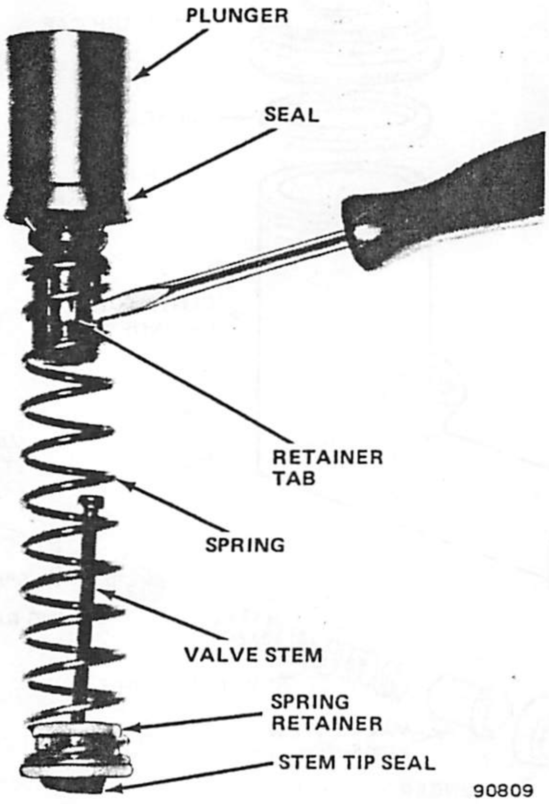

Fig. 2A-10 **Removing Valve Spring and Stem from Plunger**

Disassembly

(1) Clean cylinder exterior thoroughly.

(2) Remove boot from cylinder.

(3) Remove cylinder push rod, boot, plunger and spring as assembly (fig. 2A-11).

(4) Remove spring and seal from plunger.

(5) Remove snap ring that retains push rod in plunger and remove push rod and boot.

(6) Remove boot from push rod.

(7) Clean parts with brake fluid.

Assembly

(1) Install new boot on push rod.

(2) Install push rod in plunger and install new push rod retaining snap ring.

(3) Install spring on plunger.

(4) Lubricate cylinder bore and seal with brake fluid.

(5) Install assembled plunger, spring and push rod in cylinder.

(6) Install and secure boot on cylinder.

(7) Install pivot, washer and seal on end of push rod.

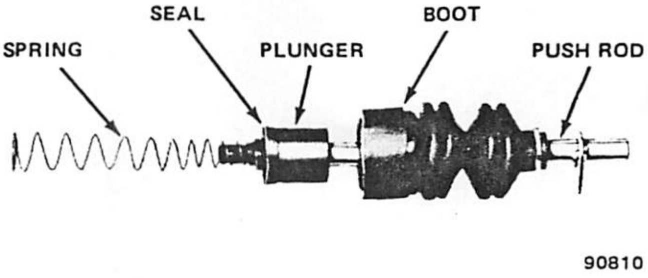

Fig. 2A-11 **Slave Cylinder Push Rod, Plunger, and Spring Assembly**

Installation

(1) Position heat shield on cylinder.

(2) Lubricate throwout lever socket with chassis lubricant.

(3) Align push rod with throwout lever, position cylinder on clutch housing and install cylinder attaching bolts. Tighten bolts securely.

(4) Connect throwout lever spring to cylinder push rod.

(5) Connect hydraulic line to cylinder.

(6) Lower vehicle.

(7) Fill reservoir with brake fluid and bleed hydraulic system. Refer to Clutch Hydraulic System Bleeding.

CLUTCH HYDRAULIC SYSTEM BLEEDING

(1) Fill reservoir with brake fluid.

(2) Raise vehicle.

(3) Compress slave cylinder plunger by pushing throwout lever forward as far as possible.

(4) Attach one end of rubber hose to slave cylinder bleed screw. Place opposite end of hose in glass container 1/2 full of brake fluid. Be sure hose end is submerged in fluid.

(5) Loosen bleed screw and hold throwout lever forward.

(6) Have helper press and hold clutch pedal to floor. Tighten bleed screw and release pedal. Repeat bleeding operation until fluid entering container is free of bubbles.

NOTE: *Do not allow the reservoir to run out of fluid during the bleeding operation.*

(7) Lower vehicle.

(8) Adjust reservoir fluid level to level indicated on reservoir after completing bleeding operations.

SPECIFICATIONS

Torque Specifications

Service Set-To Torques should be used when assembling components. Service In-Use Recheck Torques should be used for checking a pre-tightened item.

	USA (ft-lbs)		Metric (N•m)	
	Service Set-To Torque	In-Use Recheck Torque	Service Set-To Torque	In-Use Recheck Torque
Clutch Cover Bolts: Four-Cylinder	23	20-26	31	27-35
Clutch Housing-to-Engine Bolts: Four-Cylinder — All	54	46-62	73	62-84
Clutch Housing-to-Transmission Bolts: Four-Cylinder	54	46-62	73	62-84
Starter Motor-to-Clutch Housing Bolts: Four-Cylinder	54	46-62	73	62-84
Clutch Housing Inspection Cover Screws: Four-Cylinder	30	25-35	41	34-47
Flywheel-to-Crankshaft Bolts: Four-Cylinder	65	59-71	88	80-96
Rear Crossmember Stud Nuts: Four-Cylinder	35	30-40	47	41-54
Transmission Support Cushion-to-Crossmember Bolts: Four-Cylinder	25	20-30	34	27-41

All Torque values given in foot-pounds and newton•meters with dry fits unless otherwise specified.

80072B

CLUTCH SERVICE— SIX- AND EIGHT-CYLINDER MODELS

CLUTCH REMOVAL

(1) Remove transmission as outlined in Chapter 2B.

(2) Remove starter motor.

(3) Remove throwout bearing.

(4) Remove clutch housing.

(5) Mark position of clutch cover on flywheel for assembly alignment reference.

(6) Loosen clutch cover attaching bolts one or two turns at a time and in rotation to relieve spring tension on cover.

CAUTION: *The clutch cover bolts must be loosened evenly and in rotation to avoid cover distortion. The cover is a steel stamping and could be warped if improperly removed resulting in clutch chatter when installed.*

(7) Remove clutch cover bolts and remove cover and driven plate from flywheel.

NOTE: *Observe which side of the driven plate faces the flywheel before removing the plate. Paint or chalk alignment marks on the plate for assembly reference.*

(8) Remove pilot bushing lubricating wick and soak wick in engine oil.

(9) Inspect and service clutch components as outlined under Clutch Component Inspection.

CLUTCH INSTALLATION

(1) Check and correct clutch cover release lever height if necessary. Lubricate release lever pivots sparingly. Do not over lubricate pivots.

(2) Install pilot bushing lubricating wick in crankshaft bore.

(3) Insert Clutch Alignment Tool J-5824-01 (Cherokee, Wagoneer and Truck), Alignment Tool J-5824-01 (CJ and Scrambler), or spare clutch shaft in driven plate hub and mount assembled plate and tool on flywheel. Be sure alignment tool is fully seated in pilot bushing.

CAUTION: *Be sure the correct side of the driven plate faces the flywheel. Refer to the reference marks placed on the driven plate during clutch removal.*

(4) Position clutch cover on flywheel and over driven plate and alignment tool. Align cover and flywheel according to reference marks made during clutch removal and install cover attaching bolts finger-tight only.

(5) Tighten cover attaching bolts alternately and evenly to 40 foot-pounds (54 N•m) torque. Be sure to maintain cover-to-plate alignment while tightening bolts.

CAUTION: *The cover attaching bolts must be tightened alternately and evenly to avoid distorting the cover.*

(6) Install clutch housing and tighten housing attaching bolts to specified torque. Refer to Specifications.

(7) Install starter motor.

(8) Install throwout bearing. On CJ and Scrambler models, be sure bearing tension springs are engaged in throwout lever.

(9) Install transmission as outlined in Chapter 2B.

CLUTCH INSPECTION AND SERVICE

Driven Plate

Inspect the friction material for excessive wear, or charred, cracked, broken or loose friction material. Check the driven plate steel hub and cushion springs for distortion, cracks, or breakage. Replace the driven plate if it exhibits any of these conditions.

NOTE: *Do not replace the driven plate if the cushion springs only appear loose. This is a normal condition when the plate is removed from the vehicle and the springs are not under load.*

Clutch Cover

Inspect the cover for cracks, distortion, broken or collapsed apply springs and for broken, bent, loose, or excessively worn release levers. Inspect the pressure plate surface for deep scores, cracks, heat checking or discoloration, and for evidence of warping (use a straightedge to check pressure plate surface flatness). Replace the cover as an assembly if it exhibits any of these conditions.

NOTE: *The centrifugal rollers in the clutch cover may rattle when the cover is removed and not under load. Do not replace the cover if this occurs, it is a normal condition.*

Throwout Bearing

A simple throwout bearing design is used on Jeep vehicles. The bearing is retained on the throwout lever by tension springs.

CAUTION: *The throwout bearings used on Jeep vehicles are permanently lubricated during manufacture. Do not wash or immerse the bearings in solvent as the bearing lubricant could be dissolved. Clean the bearing by wiping it with shop towels.*

Inspect the bearing for excessive wear and deep scoring on the release lever contact surface, looseness on the sleeve, or discoloration which indicates overheating. Check the sleeve bore for excessive wear or burrs which could cause it to bind on the front bearing cap. Rotate the bearing on the sleeve. The bearing must rotate freely and not bind. When rotating the bearing, also listen for grinding or grating sounds which indicate that the internal rollers are worn or damaged. Check the bearing tension springs for distortion or breakage. Replace the bearing if it exhibits any of these conditions.

Transmission Front Bearing Cap

Inspect the bearing cap for deep scoring or excessive wear. Replace the bearing cap if worn or scored and inspect the throwout bearing sleeve for burrs, wear or other damage which could cause a bind condition. Replace the bearing cap or throwout bearing if either exhibits these conditions.

Crankshaft Pilot Bushing

Inspect the bushing for excessive wear, deep scoring, cracks, or looseness. Replace the bushing if worn or damaged.

Bushing Replacement

(1) Obtain replacement bushing and soak bushing in engine oil.

(2) Remove bushing lubricating wick.

(3) Fill crankshaft bore and pilot bushing with chassis grease.

(4) Insert clutch aligning tool into bushing and tap end of tool with lead hammer. Hydraulic pressure generated by compressed grease will force bushing out of crankshaft bore.

NOTE: *If the bushing proves difficult to remove using the hydraulic method, remove the bushing using Puller Tool J-5822 and Slide Hammer J-2619-01.*

(5) Remove all grease from crankshaft bore and clean bore thoroughly.

(6) Install replacement pilot bushing on Clutch Alignment Tool J-5824-01.

(7) Install bushing in crankshaft bore using clutch alignment tool as bushing driver. Keep bushing straight during installation and be sure it is fully seated.

(8) Install bushing lubricating wick.

Flywheel

Inspect the flywheel surfaces for cracks, deep scoring, excessive wear, heat checking, discoloration, and excessive face runout or distortion. Check face runout using a dial indicator. Runout must not exceed 0.005 inch (0.12 mm) with the crankshaft end play held to zero. Use a straightedge to check surface flatness. Inspect the ring gear teeth for cracks, breakage, or excessive wear. If the ring gear teeth are severely milled (worn), also check the starter motor drive teeth for similar wear or damage. Check the flywheel attaching bolt torque and tighten the bolts to 105 foot-pounds (142 N•m) torque if necessary. Replace the flywheel if it exhibits any of the conditions just described.

Transmission Clutch Shaft

Install the driven plate on the clutch shaft. The driven plate must move freely on the shaft splines. If the splines have burrs, remove them using a file or oilstone. If the driven plate does not move freely on the splines, incomplete clutch release will occur resulting in hard shifting. Replace the clutch shaft if worn or damaged. Refer to Chapter 2B for procedure.

CLUTCH HOUSING ALIGNMENT

Clutch housing misalignment is caused by excessive face or bore runout of the clutch housing or housing-to-transmission adapter. Misalignment will cause improper clutch release, driven plate failure, front transmission bearing failure, premature crankshaft pilot bushing wear, and clutch noise and vibration. In severe cases, misalignment will also cause gear jump-out on deceleration. If these malfunctions occur, the rear face and bore of the clutch housing or housing-to-transmission adapter must be checked for excessive runout.

Alignment Check—Without Transmission Adapter

NOTE: *Use the following procedure when the vehicle is not equipped with a clutch housing-to-transmission adapter.*

(1) Remove transmission as outlined in Chapter 2B.

(2) Remove clutch housing, clutch cover, and driven plate.

(3) Remove one flywheel attaching bolt.

(4) Obtain 1/2-20 x 9-inch bolt and 1/2-20 nut for use as dial indicator support.

(5) Thread nut onto bolt until 10 or 12 bolt threads are exposed.

(6) Thread bolt into crankshaft attaching bolt hole and tighten nut to secure bolt.

(7) Install clutch housing on engine and tighten housing attaching bolts to specified torque. Refer to Specifications.

(8) Mount dial indicator on 9-inch bolt. Indicator stylus must contact rear face of clutch housing approximately 1/8 inch from edge of bore (fig. 2A-12).

(9) Rotate crankshaft and check face runout of housing. Face runout must not exceed 0.010 inch (0.25 mm) total indicator reading at any point throughout 360 degrees rotation.

NOTE: *Crankshaft end play must be held to zero to obtain an accurate face runout reading. Move and hold the crankshaft forward or rearward using a pry bar to remove end play.*

(10) If face runout is over specified limits, correct runout as follows:

(a) Move dial indicator aside and loosen clutch housing attaching bolts.

(b) Insert shims between housing and engine-to-housing spacer as required to correct runout (fig. 2A-13). Install shims at points A to align top of housing with bottom of housing. Install shims at points B, D, C, or E to correct runout at either side of clutch housing. Shims installed at points D and E will also align housing from bottom to top.

(c) Tighten housing attaching bolts to specified torque.

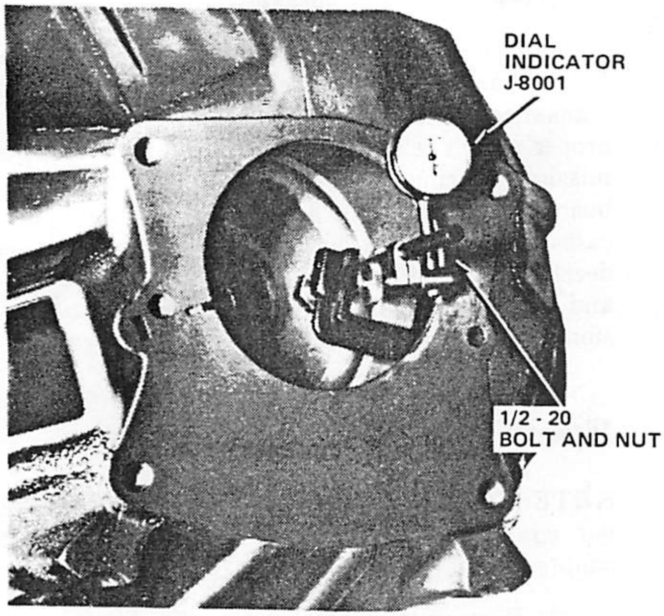

Fig. 2A-12 Mounting Dial Indicator

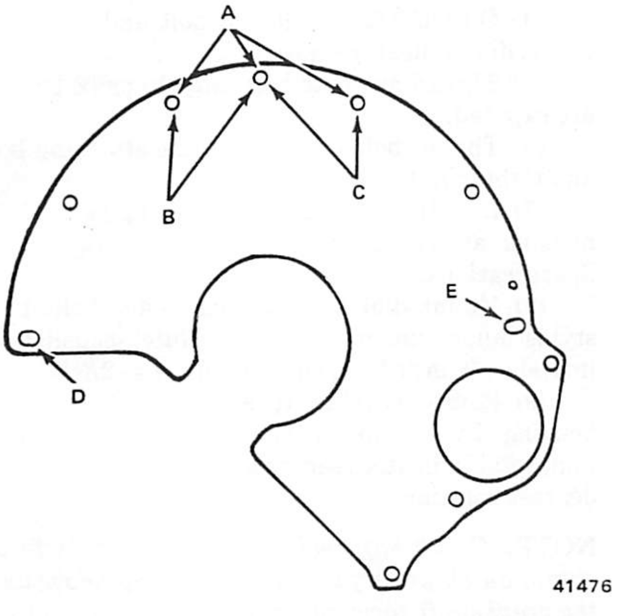

Fig. 2A-13 Shim Placement (Six-Cylinder Engine Shown)

(d) Reposition dial indicator stylus on housing face and recheck face runout.

(e) Total face runout of clutch housing must not exceed 0.010 inch (0.25 mm). Relocate shims as necessary to correct runout.

(11) Check clutch housing bore alignment by positioning dial indicator stylus on inside diameter of housing bore.

(12) Hold crankshaft end play to zero, rotate crankshaft and note dial indicator reading at four equally spaced points. Bore runout must not exceed 0.010 inch (0.25 mm) total indicator reading at any point.

NOTE: *Any change in face alignment will also change bore alignment. In some cases, it is possible to correct bore alignment simply by correcting face alignment. Where it is impossible to correct bore alignment to a maximum of 0.010 inch (0.25 mm) runout (after changing face alignment), replace the clutch housing.*

Alignment Check—With Transmission Adapter

Use the following procedure to check clutch housing-to-transmission adapter alignment.

(1) Remove transmission as outlined in Chapter 2B.

(2) Remove clutch housing and adapter as assembly. Do not remove adapter from housing.

(3) Remove clutch cover and driven plate.

(4) Remove one flywheel attaching bolt.

(5) Obtain 1/2-20 x 15-inch bolt and 1/2-20 nut for use as dial indicator support.

(6) Thread nut onto bolt until 10 to 12 threads are exposed.

(7) Thread bolt into flywheel attaching bolt hole and tighten nut to secure bolt.

(8) Install clutch housing and adapter assembly and tighten housing bolts to specified torque.

(9) Mount dial indicator on bolt. Position indicator so stylus contacts transmission mating face of adapter about 1/8 inch from edge of adapter bore.

(10) Zero dial indicator, rotate crankshaft 360 degrees, and observe adapter face runout. Runout must not exceed 0.010 inch (0.25 mm) total indicator reading at any point through 360 degrees of rotation.

CAUTION: *Crankshaft end play must be held to zero to obtain an accurate face runout reading. Move and hold the crankshaft forward or rearward using a pry bar to eliminate end play.*

(11) Check bore runout of adapter. Position dial indicator so stylus contacts adapter bore at approximate center of bore.

(12) Zero dial indicator, rotate crankshaft 360 degrees, and observe runout of adapter bore. Runout must not exceed 0.010 inch (0.25 mm) at any point through 360 degrees of rotation.

NOTE: *Crankshaft end play must be held to zero to obtain an accurate runout reading. Move and hold the crankshaft forward or rearward using a pry bar to eliminate end play.*

(13) If adapter runout is above specified limits, correct adapter misalignment as outlined in following steps.

(14) If adapter bore runout is within limits but out of tolerance at face, shim clutch housing as required to obtain runout of 0.010 inch (0.25 mm) or less. Shim housing as outlined under Alignment Check—Without Transmission Adapter.

(15) If adapter face runout is within limits but out of tolerance at bore, proceed as follows:

(a) Loosen adapter-to-clutch housing bolts one or two turns.

(b) Move adapter up, down, or side-to-side as required to obtain runout of 0.010 inch (0.25 mm) or less. Tap adapter with hammer to reposition it.

(c) When runout is corrected, tighten adapter bolts to 35 foot-pounds (47 N•m) torque.

(d) Recheck runout and adjust adapter position again if necessary.

(16) If adapter face or bore runout cannot be brought within tolerance, replace adapter and clutch housing.

(17) If adapter and housing are replaced, install dial indicator and check runout of replacement parts.

(18) After checking and correcting adapter alignment, remove dial indicator and remove clutch housing with adapter attached. Do not remove adapter or disturb adapter position if runout was corrected.

CAUTION: *If the clutch housing was shimmed, mark the location of the shims for assembly reference before removing the housing.*

(19) Remove 1/2-20 bolt and nut from flywheel and install flywheel bolt removed previously. Tighten bolt to 105 foot-pounds (142 N•m) torque.

(20) Install driven plate and clutch cover. Tighten clutch cover bolts to 40 foot-pounds (54 N•m) torque.

(21) Install clutch housing and adapter assembly and clutch housing alignment shims as necessary.

(22) Tighten clutch housing bolts to specified torque. Refer to Specifications.

(23) Install transmission as outlined in Chapter 2B.

CLUTCH COVER RELEASE LEVER ADJUSTMENT

NOTE: *Always check and correct the release lever height adjustment, if necessary, before installing an original or replacement clutch cover.*

(1) Install Gauge Plate Tool J-1048, on flywheel in position normally occupied by driven plate (fig. 2A-14).

(2) Position clutch cover over gauge plate. Cover release levers must be directly over machined lands of gauge plate and gauge plate hub must be centered between ends of release levers.

(3) Install clutch cover on flywheel. Tighten cover attaching bolts in rotation, one or two turns at a time to avoid distorting cover.

(4) Compress each release lever several times to seat levers in operating position (fig. 2A-15). Use hammer handle to compress levers.

(5) Measure height of each lever relative to gauge hub using Clutch Lever Height Gauge Tool J-23330 (fig. 2A-16). Gauge tool has four different dimensional settings which can be used for measuring above and below hub.

(6) Adjust release levers by turning lever height adjusting nuts until lever is at desired height.

(7) After each lever has been adjusted, work lever down and up several times and recheck adjustment. If adjustment is correct, stake nut with punch to secure it.

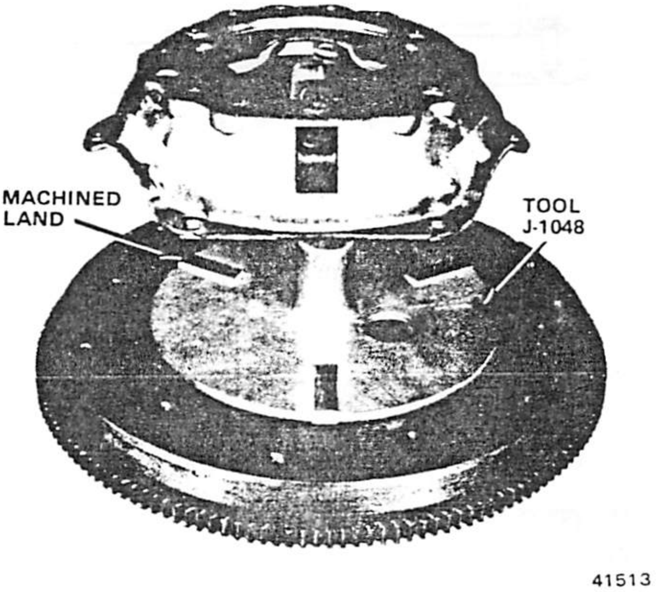

Fig. 2A-14 Mounting Gauge Plate J-1048

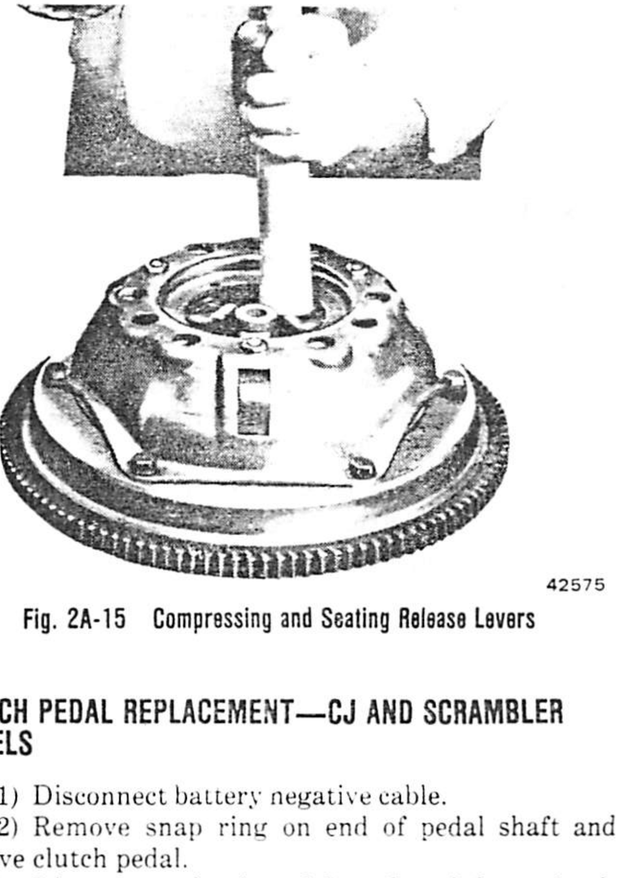

Fig. 2A-15 Compressing and Seating Release Levers

CLUTCH PEDAL REPLACEMENT—CJ AND SCRAMBLER MODELS

(1) Disconnect battery negative cable.

(2) Remove snap ring on end of pedal shaft and remove clutch pedal.

(3) Disconnect clutch pedal push rod from clutch pedal and remove clutch pedal.

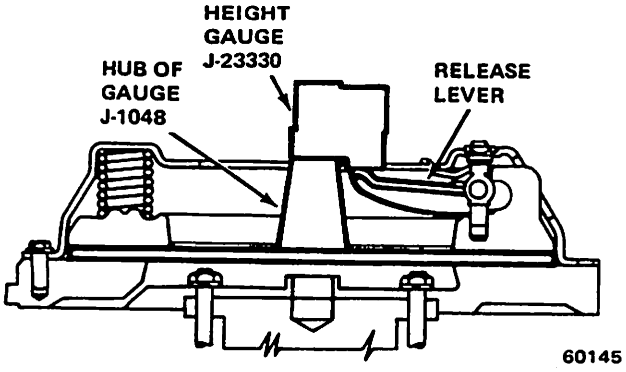

Fig. 2A-16 Measuring Release Lever Height

(4) Lubricate bushings in replacement clutch pedal with Lubriplate, or equivalent lubricant.

(5) Connect clutch pedal push rod to replacement clutch pedal.

(6) Install clutch pedal on pedal shaft and install snap ring on end of shaft.

(7) Connect clutch pedal push rod to bellcrank.

(8) Connect battery negative cable.

(9) Check and adjust clutch pedal free play, if necessary.

CLUTCH PEDAL AND OVERCENTER SPRING REPLACEMENT—CHEROKEE-WAGONEER-TRUCK

Overcenter Spring

Removal

(1) On vehicles with air conditioning, remove left side duct extension.

(2) Disconnect clutch push rod at clutch pedal.

(3) Remove clutch pedal stop.

(4) Press clutch pedal halfway down to spread overcenter spring coils slightly and insert thin shims between overcenter spring coils.

(5) Raise clutch pedal until pedal stops against lower edge of instrument panel.

(6) Disconnect and remove overcenter spring from pedal and support bracket.

Installation

(1) Insert thin shims between overcenter spring coils.

(2) Install overcenter spring on support bracket and clutch pedal.

(3) Remove shims from overcenter spring coils.

(4) Connect clutch push rod to clutch pedal.

(5) Install clutch pedal stop.

(6) Check clutch release rod position. Be sure rod has not become disengaged from throwout lever.

(7) Check and adjust clutch pedal free play, if necessary.

Clutch Pedal

Removal

(1) Disconnect battery negative cable.

(2) Remove bolt attaching engine compartment wiring harness to dash panel connector.

(3) Disconnect engine compartment wiring harness out of dash panel connector.

(4) On vehicles with air conditioning, remove left side duct extension.

(5) Disconnect clutch push rod at clutch pedal.

(6) Remove clutch pedal stop.

(7) Remove overcenter spring. Refer to Clutch Pedal Overcenter Spring Replacement—Cherokee-Wagoneer-Truck.

(8) Remove fuse panel attaching screws and remove fuse panel.

(9) Remove snap ring from clutch pedal end of pedal shaft using snap ring pliers with 90 degree tips.

(10) Remove clutch pedal from pedal shaft.

Installation

(1) Install clutch pedal on pedal shaft.

(2) Install retaining snap ring on clutch pedal end of pedal shaft. Be sure ring is fully seated.

(3) Install fuse panel.

(4) Install overcenter spring. Refer to Clutch Pedal Overcenter Spring Replacement—Cherokee-Wagoneer-Truck.

(5) Install clutch pedal stop.

(6) Connect clutch push rod to clutch pedal.

(7) On vehicles with air conditioning, install left side duct extension.

(8) Connect engine compartment wiring harness to dash panel connector and install connector attaching screw.

(9) Install battery negative cable.

(10) Check and adjust clutch pedal free play, if necessary.

SPECIFICATIONS

Clutch Specifications

Model	Engine (CID)	Clutch Diameter	Release Lever Height (Above Gauge Hub)	Pedal Free Play
CJ-5/CJ-7 Scrambler	151	9-1/8 (23.5 cm)	1.595 to 1.720 (40.5to43.7mm)	N/A
	258*	10-1/2 in. (26.7 cm)	2.04 to 2.16 (51.8 to 68.6 mm)	1 to 1-1/4 in. (25.4 to 31.7mm)
Cherokee, Wagoneer, Truck	258*	10-1/2 in. (26.7 cm)		1 to 1-1/4 in. (25.4 to 31.7mm)
	360	11 (27.9 cm)	3/16 (4.7 mm)	3/8 to 5/8 (9.5 to 15.8 mm)

*With .305 Gauge

60567

Clutch Housing Alignment Specifications

Clutch Housing Bore to Crankshaft Centerline .	0.010 max. (0.25 mm)
Clutch Housing Transmission Mounting Face to Crankshaft Centerline.	0.010 max. (0.25 mm)
Clutch Housing to Transmission Adapter Bore to Crankshaft Centerline.	0.010 max. (0.25 mm)
Clutch Housing to Transmission Adapter Face to Crankshaft Centerline.	0.010 max. (0.25 mm)
Flywheel Runout at Face	0.005 max. (0.12 mm)

60569

Torque Specifications

Service Set-To Torques should be used when assembling components. Service In-Use Recheck Torques should be used for checking a pre-tightened item.

	USA (ft-lbs)		Metric (N·m)	
	Service Set-To Torque	In-Use Recheck Torque	Service Set-To Torque	In-Use Recheck Torque
Clutch Bellcrank Bracket to Frame Rail Bolt (Cke., Wag., Trk.)	14	12-16	19	16-22
Clutch Bellcrank Pivot	35	30-40	47	41-54
Clutch Housing Inspection Cover Screws:				
Four-Cylinder	30	25-35	41	34-47
Clutch Housing Spacer to Block Bolt (Eight-Cylinder Engines)	15	12-17	20	16-23
Clutch Housing to Engine Block Bolt				
Six-Cylinder Engines				
Top	35	30-40	47	41-54
Bottom.	45	40-50	61	54-68
Eight-Cylinder Engines				
Top	30	25-35	41	34-47
Bottom.	30	25-35	41	34-47
Clutch Housing-to-Engine Bolts:				
Four-Cylinder — All	54	46-62	73	62-84
Clutch Housing to Engine Dowel Bolt Nut (6- and 8-Cylinder)	45	40-50	61	54-68
Clutch Housing-to-Transmission Bolts:				
Four-Cylinder	54	46-62	73	62-84
Clutch, Hydraulic Fluid Line Fitting to Master Cylinder.	132 in-lbs		120-144 in-lbs	
Clutch, Hydraulic Fluid Line Fitting to Slave Cylinder.	190 in-lbs		160-220 in-lbs	
Clutch Pedal Rebound Bumper, Bolt, Nut, and Lockwasher Assembly to Pedal	40	35-45	54	47-61
Clutch Pedal Shaft Locknut	33	30-36	45	41-49
Flywheel-to-Crankshaft Bolts:				
Four-Cylinder	65	59-71	88	80-96
Rear Crossmember Stud Nuts:				
Four-Cylinder	35	30-40	47	41-54
Starter Motor-to-Clutch Housing Bolt:				
Four-Cylinder	54	46-62	73	62-84
Six- and Eight-Cylinder.	18	12-25	24	16-34
Transmission Case to Clutch Housing Bolt.	55	50-60	74	68-81
Transmission Support Cushion-to-Crossmember Bolt:				
Four-Cylinder	25	20-30	34	27-41

All Torque values given in foot-pounds and newton-meters with dry fits unless otherwise specified. Refer to Standard Torque Specifications and Capscrew Markings Chart in Section A of this manual for any torque specifications not listed above.

60568

Tools

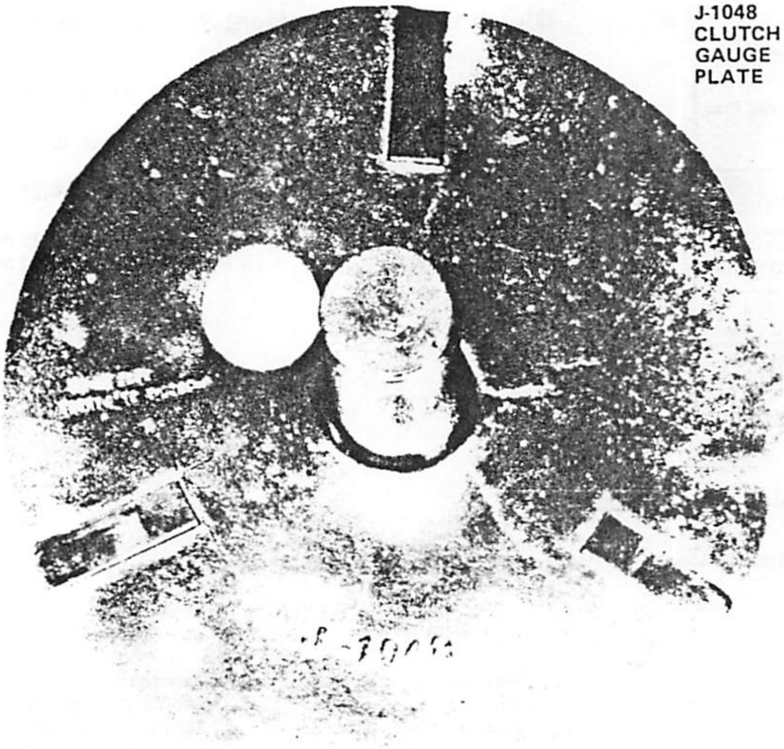

J-1048
CLUTCH
GAUGE
PLATE

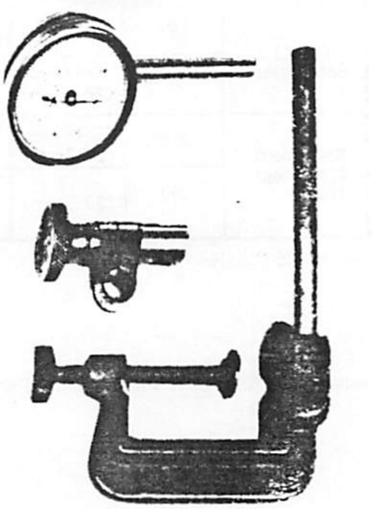

J-8001
DIAL
INDICATOR
SET

J-5824-01
ALIGNING
TOOL

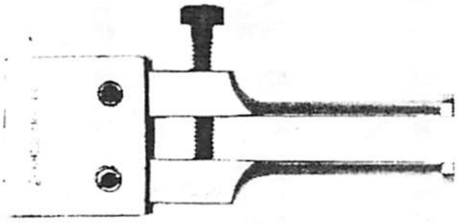

REMOVER TOOL
J-5822

SLIDE HAMMER
J-2619-01

J-23330
CLUTCH LEVER
HEIGHT GAUGE

42578

MANUAL TRANSMISSION 2B

SECTION INDEX

GENERAL INFORMATION

GENERAL

Four manual transmission models are used in Jeep vehicles; they are Models T4, T5, T-176, and T-18A.

Models T4 and T-176 are 4-speed, constant mesh units providing synchromesh engagement in all forward gear ranges. The Model T5 is a 5-speed constant mesh unit providing synchromesh engagement in all forward gear ranges. Model T-18A is a 4-speed, constant mesh unit providing synchromesh engagement in second, third, and fourth gear ranges only. First (low) gear is not synchronized in this transmission.

Model T4 is used with four- and six-cylinder engines. Model T5 is optional on four- and six-cylinder models except six-cylinder CJ-5 vehicles. Model T-176 is used with four-, six- and eight-cylinder engines. Model T-18A is used in J-20 Truck models only.

All four transmission models are floor shift units. Column shift units are not available in any Jeep model.

The shift mechanism on all transmission models is located within the shift control housing which also serves as the transmission top cover. The shift mechanism does not require adjustment and can be serviced independently of the transmission.

GEARSHIFT PATTERNS

The gearshift pattern for each transmission model is shown in the Gearshift Pattern Chart. The four forward gear ranges for each model are in a standard "H" configuration.

BACKUP LAMP SWITCH

A spring and plunger-type backup lamp switch is used on all models. The switch is located in the transmission case and is actuated by the reverse shift rail. The switch does not require adjustment and is serviced as an assembly only.

IDENTIFICATION

An identification tag displaying the Jeep part number is attached on T4 and T5 models to the right side of the adapter housing by an adapter housing-to-transmission case bolt. On T-176 and T-18 transmissions, the identification tag is bolted to the shift control lever housing near its left rear corner. The information on this tag is necessary to obtain correct replacement parts should replacement become necessary. Be sure the tag is securely attached in the original location after completing all service operations.

TRANSMISSION GEAR RATIOS

Refer to the Transmission Gear Ratio Chart at the end of this chapter for ratio applications.

Service Diagnosis

Condition	Possible Cause	Correction
TRANSMISSION SHIFTS HARD	(1) Clutch adjustment incorrect	(1) Adjust clutch.
	(2) Clutch linkage or cable binding	(2) Lubricate or repair as necessary.
	(3) Shift rail binding	(3) Check for mispositioned selector arm roll pin, loose cover bolts, worn shift rail bores, worn shift rail, distorted oil seal, or extension housing not aligned with case. Repair as necessary.
	(4) Internal bind in transmission caused by shift forks, selector plates, or synchronizer assemblies	(4) Remove, disassemble and inspect transmission. Replace worn or damaged components as necessary.
	(5) Clutch housing misalignment	(5) Check runout at rear face of clutch housing. Correct runout as outlined in Chapter 2A.
	(6) Incorrect lubricant	(6) Drain and refill transmission.
	(7) Block rings and/or cone seats worn	(7) Blocking ring to gear clutch tooth face clearance must be 0.030 inch or greater. If clearance is correct it may still be necessary to inspect blocking rings and cone seats for excessive wear. Repair as necessary.
GEAR CLASH WHEN SHIFTING FROM ONE GEAR TO ANOTHER	(1) Clutch adjustment incorrect	(1) Adjust Clutch.
	(2) Clutch linkage or cable binding	(2) Lubricate or repair as necessary.
	(3) Clutch housing misalignment	(3) Check runout at rear of clutch housing. Correct runout as outlined in Chapter 2A
	(4) Lubricant level low or incorrect lubricant	(4) Drain and refill transmission and check for lubricant leaks if level was low. Repair as necessary.
	(5) Gearshift components, or sychronizer assemblies worn or damaged	(5) Remove, disassemble and inspect transmission. Replace worn or damaged components as necessary.
TRANSMISSION NOISY	(1) Lubricant level low or incorrect lubricant	(1) Drain and refill transmission. If lubricant level was low, check for leaks and repair as necessary.
	(2) Clutch housing-to-engine, or transmission-to-clutch housing bolts loose	(2) Check and correct bolt torque as necessary.
	(3) Dirt, chips, foreign material in transmission	(3) Drain, flush, and refill transmission.
	(4) Gearshift mechanism, transmission gears, or bearing components worn or damaged	(4) Remove, disassemble and inspect transmission. Replace worn or damaged components as necessary.
	(5) Clutch housing misalignment	(5) Check runout at rear face of clutch housing. Correct runout as outlined in Chapter 2A.

70065A

Gearshift Pattern Chart

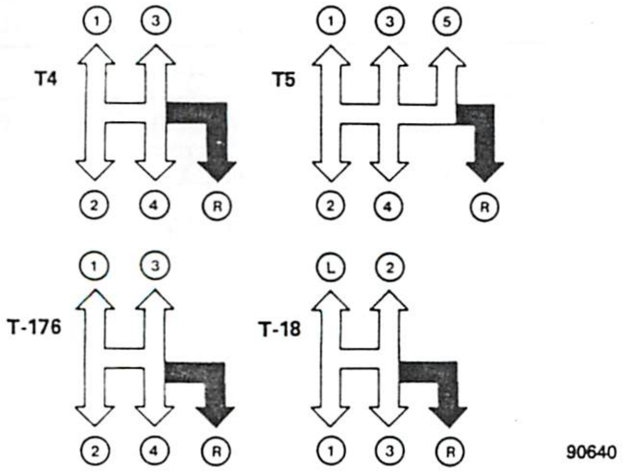

TRANSMISSION LUBRICANTS

The recommended lubricant for T4 and T5 transmission models is AMC/Jeep Automatic Transmission Fluid or equivalent labeled Dexron®. The recommended lubricant for T-176 and T-18 transmission models is SAE 85W-90, A.P.I. classification GL-5 Gear Lubricant. This lubricant grade should be used during all service and maintenance operations.

NOTE: *Do not use gear lubricants containing lead, chlorine, or sulphur compounds in T-176 and T-18 transmissions.*

When refilling or adding lubricant to the transmission, fill the transmission until the lubricant level is at the lower edge of the fill plug hole only. Lubricant capacities for the four transmission models are:

- T4—3.5 Pints (1.7 liters).
- T5—4.0 Pints (1.9 liters).
- T-176—3.5 Pints (1.7 liters)
- T-18A—6.5 Pints (3.07 liters).

TRANSMISSION REMOVAL

(1) Remove screws attaching transmission shift lever boot to floorpan and slide boot upward on lever.

(2) On models with the T4 or T5 transmission, remove bolts attaching transmission shift lever housing to transmission and remove lever and housing (fig. 2B-1).

(3) On models with T-18A transmission, unthread shift lever cap and remove cap, gasket, spring seat, spring and shift lever as assembly. Remove shift lever locating pin from housing. (fig. 2B-2).

(4) On models with T-176 transmission, press and turn transmission shift lever retainer counterclockwise to release lever. Remove lever, boot, spring and seat as assembly. (fig. 2B-3).

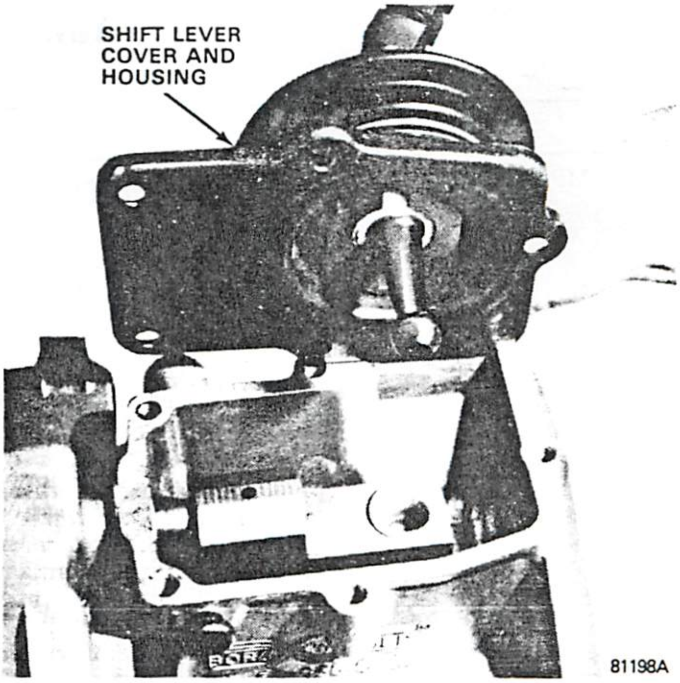

Fig. 2B-1 Shift Lever and Housing Removal/Installation—Models T4 and T5

(5) Raise vehicle.

(6) Mark rear propeller shaft and transfer case yoke for assembly alignment reference.

(7) Disconnect rear propeller shaft at transfer case yoke. Move shaft aside and secure to underbody with wire.

(8) On Cherokee Wagoneer and Truck models, disconnect front parking brake cable at equalizer. Remove clip that retains rear cable to rear crossmember and move cable aside.

(9) Position safety stand under clutch housing to support engine.

(10) Remove nuts and bolts attaching rear crossmember to frame rails and rear support cushion and remove crossmember.

(11) Disconnect speedometer cable.

(12) Disconnect backup lamp switch wire.

(13) Disconnect four-wheel drive indicator switch wire.

(14) Disconnect transfer case vent hose at transfer case.

(15) Mark front propeller shaft and transfer case yoke for assembly alignment reference.

(16) Disconnect front propeller shaft from transfer case yolk. Move shaft aside and secure to underbody with wire.

(17) On CJ and Scrambler models, remove transfer case shift lever as follows: Remove shifter shaft retaining nut. Remove cotter pins that retain shift control link pins in shift rods and remove pins. Remove shifter shaft and disengage shift lever from shift control links. Slide lever upward in boot to move lever out of way.

Service Diagnosis (Continued)

Condition	Possible Cause	Correction
JUMPS OUT OF GEAR	(1) Clutch housing misalignment	(1) Check runout at rear face of clutch housing. Correct runout as outlined in Chapter 2A.
	(2) Gearshift lever loose	(2) Check lever for worn fork. Tighten loose attaching bolts.
	(3) Offset lever nylon insert worn or lever attaching nut loose	(3) Remove gearshift lever and check for loose offset lever nut or worn insert. Repair or replace as necessary.
	(4) Gearshift mechanism, shift forks, selector plates, interlock plate, selector arm, shift rail, detent plugs, springs or shift cover worn or damaged	(4) Remove, disassemble and inspect transmission cover assembly. Replace worn or damaged components as necessary.
	(5) Clutch shaft or roller bearings worn or damaged	(5) Replace clutch shaft or roller bearings as necessary.
	(6) Gear teeth worn or tapered, synchronizer assemblies worn or damaged, excessive end play caused by worn thrust washers or output shaft gears	(6) Remove, disassemble, and inspect transmission. Replace worn or damaged components as necessary.
	(7) Pilot bushing worn	(7) Replace pilot bushing.
WILL NOT SHIFT INTO ONE GEAR	(1) Gearshift selector plates, interlock plate, or selector arm, worn, damaged, or incorrectly assembled	(1) Remove, disassemble, and inspect transmission cover assembly. Repair or replace components as necessary.
	(2) Shift rail detent plunger worn, spring broken, or plug loose	(2) Tighten plug or replace worn or damaged components as necessary.
	(3) Gearshift lever worn or damaged	(3) Replace gearshift lever.
	(4) Synchronizer sleeves or hubs, damaged or worn	(4) Remove, disassemble and inspect transmission. Replace worn or damaged components.
LOCKED IN ONE GEAR — CAN NOT BE SHIFTED OUT	(1) Shift rail(s) worn or broken, shifter fork bent, setscrew loose, center detent plug missing or worn	(1) Inspect and replace worn or damaged parts.
	(2) Broken gear teeth on countershaft gear, clutch shaft, or reverse idler gear	(2) Inspect and replace damaged part.
	(3) Gearshift lever broken or worn, shift mechanism in cover incorrectly assembled or broken, worn damaged gear train components	(3) Disassemble transmission. Replace damaged parts or assemble correctly.

70065B

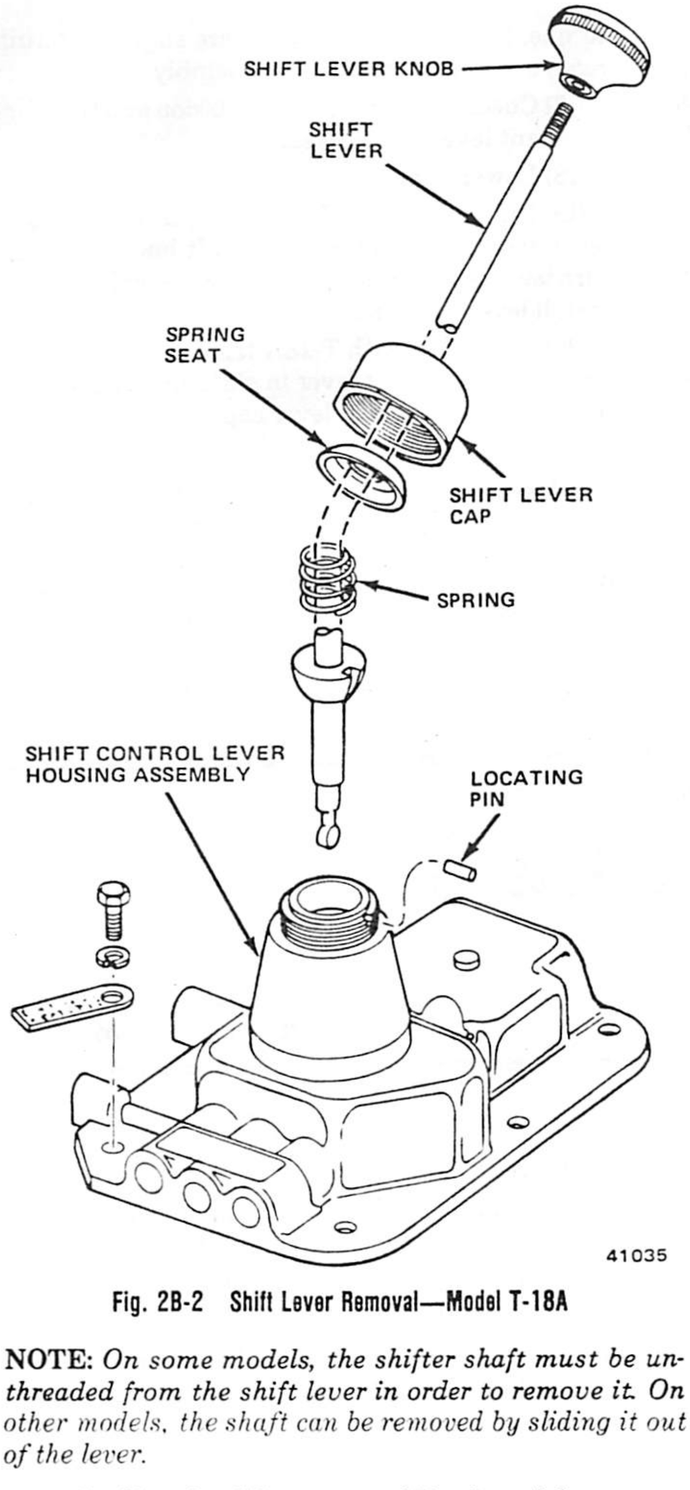

Fig. 2B-2 Shift Lever Removal—Model T-18A

NOTE: *On some models, the shifter shaft must be unthreaded from the shift lever in order to remove it. On other models, the shaft can be removed by sliding it out of the lever.*

(18) On Cherokee Wagoneer and Truck models, remove cotter pin and washers that connect link to shift lever and disconnect link from shift lever.

(19) Support transmission-transfer case assembly with transmission jack. Use safety chain to secure assembly on jack.

(20) Remove bolts attaching transmission to clutch housing and remove transmission-transfer case assembly.

(21) Remove bolts attaching transfer case to transmission and remove transfer case.

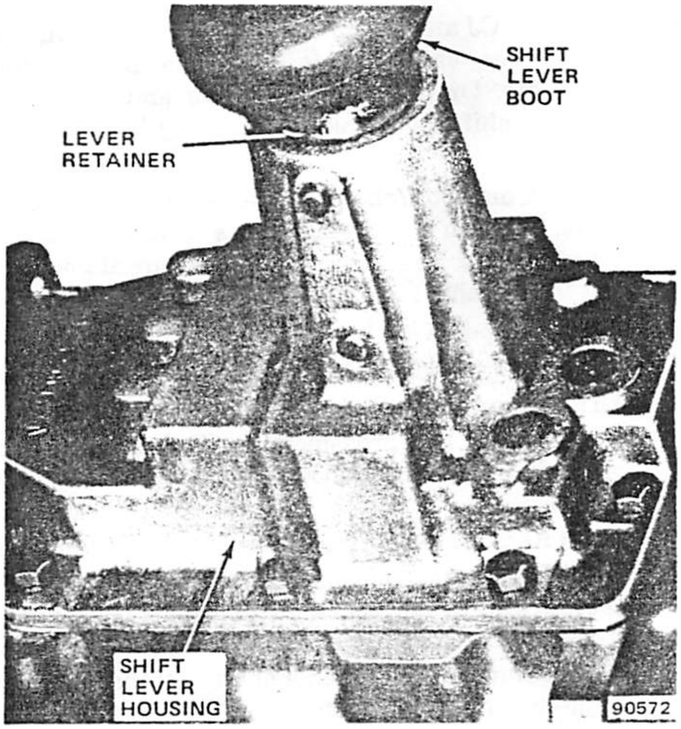

Fig. 2B-3 Shift Lever Removal—Model T-176

(22) Clean old gasket material and sealer from mating surfaces of transmission and transfer case.

(23) Remove pilot bushing lubricating wick from bushing and soak wick in engine oil. Use long needlenose pliers to remove wick from bushing.

TRANSMISSION INSTALLATION

(1) Install pilot bushing lubricating wick and align throwout bearing with splines in driven plate hub.

(2) Shift transmission into gear using shift lever or long screwdriver. This prevents clutch shaft from rotating during installation and makes clutch shaft-to-driven plate spline alignment easier.

(3) Mount transmission on transmission jack. Raise transmission and align transmission clutch shaft with splines in driven plate hub.

(4) Install transmission. When transmission is seated on clutch housing, install and tighten transmission-to-clutch housing bolts to 55 foot-pounds (75 N•m) torque.

(5) Apply Permatex Number 3 sealer, or equivalent, to both sides of replacement transmission-to-transfer case gasket and position gasket on transfer case.

(6) Mount transfer case on transmission jack. Raise transfer case and align transmission output shaft and transfer case input shaft splines.

(7) Install transfer case on transmission. On CJ and Scrambler models, install and tighten transfer case attaching bolts to 30 foot-pounds (41 N•m) torque. On Cherokee Wagoneer and Truck models, install and tighten transfer case attaching stud nuts to 40 foot-pounds (54 N•m) torque.

(8) On CJ and Scrambler models, install transfer case shift lever, shifter shaft, link pins and control link assembly. On Cherokee Wagoneer and Truck models, connect shift lever link to operating lever on transfer case.

(9) Connect front propeller shaft to transfer case yoke. Tighten clamp strap bolts to 15 foot-pounds (20 N•m) torque. Be sure shaft and yoke are aligned according to reference marks made at disassembly.

(10) Connect vent hose to transfer case.

(11) Connect wire to four-wheel drive indicator switch.

(12) Connect speedometer cable.

(13) Install rear crossmember. Tighten crossmember attaching nuts and bolts to 30 foot-pounds (41 N•m) torque.

(14) Remove safety stand used to support engine.

(15) On Cherokee Wagoneer and Truck models, connect parking brake rear cable to clip that retains cable on crossmember, and connect front cable to equalizer.

(16) Connect rear propeller shaft to transfer case yoke. Tighten clamp strap bolts to 15 foot-pounds (20 N•m) torque. Be sure shaft and yoke are aligned according to reference marks made at disassembly.

(17) Check and correct transmission and transfer case lubricant levels, if necessary.

(18) Lower vehicle.

(19) On models with T-176 transmission, install shift lever assembly. Seat lever in shift housing, press and turn lever retainer clockwise to lock lever in housing and install lever boot on housing.

(20) On models with T-18A transmission, install shift lever assembly. Seat lever in shift housing, seat gasket on housing and thread lever cap onto housing. Tighten cap securely.

(21) On models with the T4 or T5 transmission, install shift lever and housing on transmission and tighten housing bolts to 10 foot-pounds (14 N•m) torque. Use RTV sealant, or equivalent to seal the housing to the transmission case. Be sure shift lever is properly engaged with offset lever before tightening housing bolts.

(22) Position shift lever boot on floorpan and install boot attaching screws.

MODEL T4
4-SPEED TRANSMISSION

TRANSMISSION DISASSEMBLY

CAUTION: *Except for the gearshift lever attaching bolts and fill plug, all threaded holes and bolts used in the Model T4 Transmission case have metric threads. If replacement bolts are required during service, use only those of the same size and length as the originals.*

(1) Remove drain plug on transmission case and drain lubricant (fig. 2B-4).

(2) Using pin punch and hammer, remove roll pin attaching offset lever to shift rail (fig. 2B-5).

(3) Remove adapter housing-to-transmission case bolts and remove housing and offset lever as assembly (fig. 2B-6).

CAUTION: *Do not attempt to remove the offset lever while the adapter housing is still bolted in place. The lever has a positioning lug engaged in the housing detent plate which prevents moving the lever far enough rearward for removal.*

(4) Remove detent ball and spring from offset lever and remove roll pin from extension/adapter housing or offset lever (fig. 2B-7).

(5) Remove and retain countershaft rear thrust bearing and bearing race (fig. 2B-8).

(6) Remove transmission cover and shift fork assembly attaching bolts and remove cover (fig. 2B-9).

NOTE: *Two shift control housing cover bolts are dowel-type alignment bolts. Note the location of these bolts for assembly reference.*

(7) Remove C-clip attaching reverse lever to reverse lever pivot bolt (fig. 2B-10).

(8) Remove reverse lever pivot bolt and remove reverse lever and reverse lever fork as assembly (fig. 2B-11).

(9) Mark position of front bearing cap on transmission case using center punch, remove front bearing cap bolts and remove front bearing cap.

(10) Remove front bearing race and end play shims from front bearing cap (fig. 2B-12). Remove oil seal from bearing cap using screwdriver.

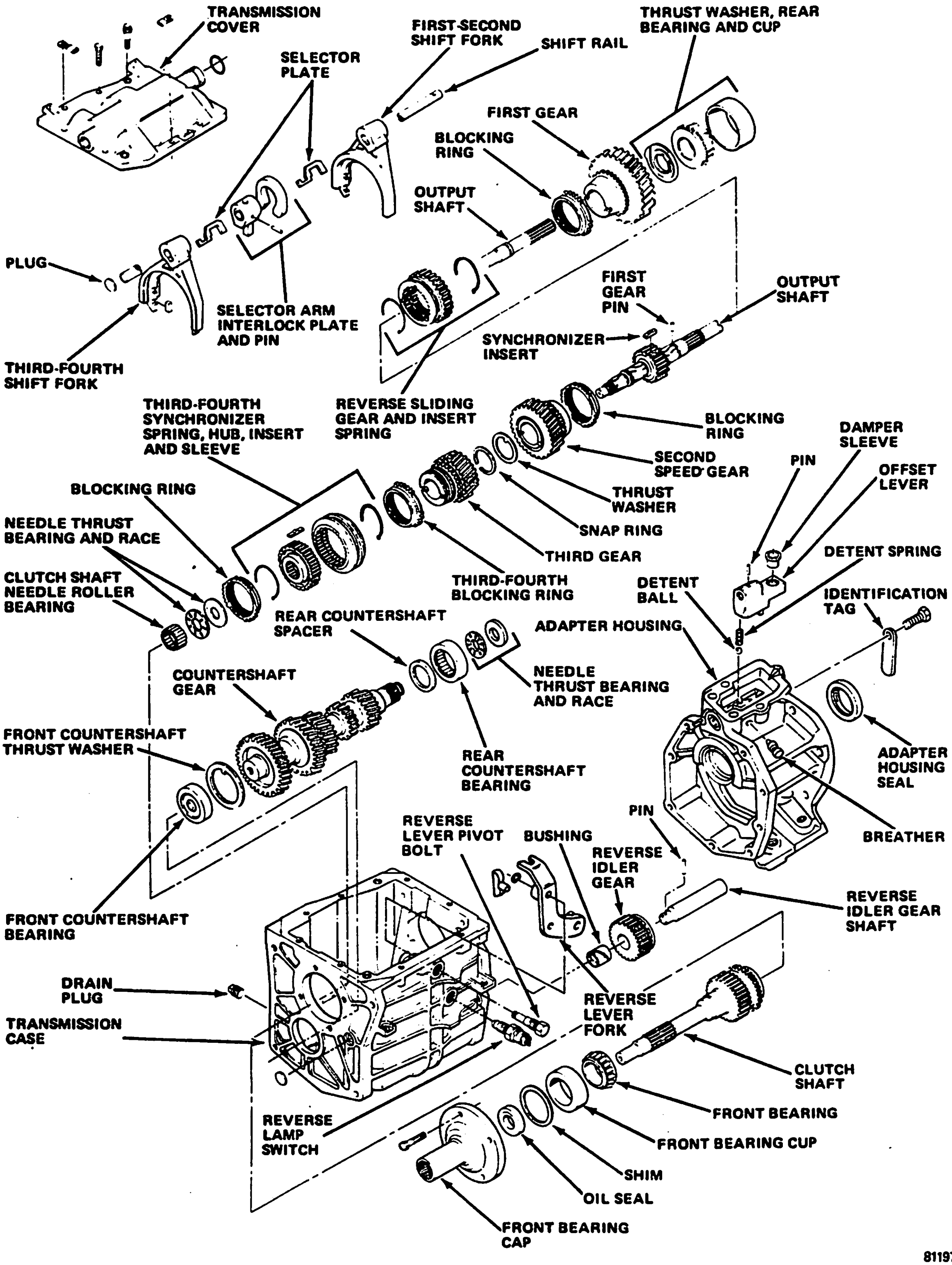

Fig. 2B-4 T4 Four-Speed Transmission

(11) Rotate clutch shaft until flat on gear teeth is facing countershaft and remove shaft (fig. 2B-13).

(12) Remove thrust bearing and 15 roller bearings from clutch shaft (fig. 2B-14).

(13) Remove output shaft bearing race (fig. 2B-15). Tap front of output shaft with rubber or plastic mallet, if necessary.

(14) Tilt output shaft assembly upward and remove from transmission case (fig. 2B-16).

(15) Remove countershaft rear bearing using brass drift and arbor press (fig. 2B-17). Note position of bearing for assembly reference. Bearing identification numbers face outward when bearing is correctly installed.

(16) Move countershaft rearward, tilt shaft upward and remove shaft from case. Remove countershaft front thrust washer from case, noting position of washer for assembly reference.

(17) Remove countershaft rear bearing spacer (fig. 2B-18).

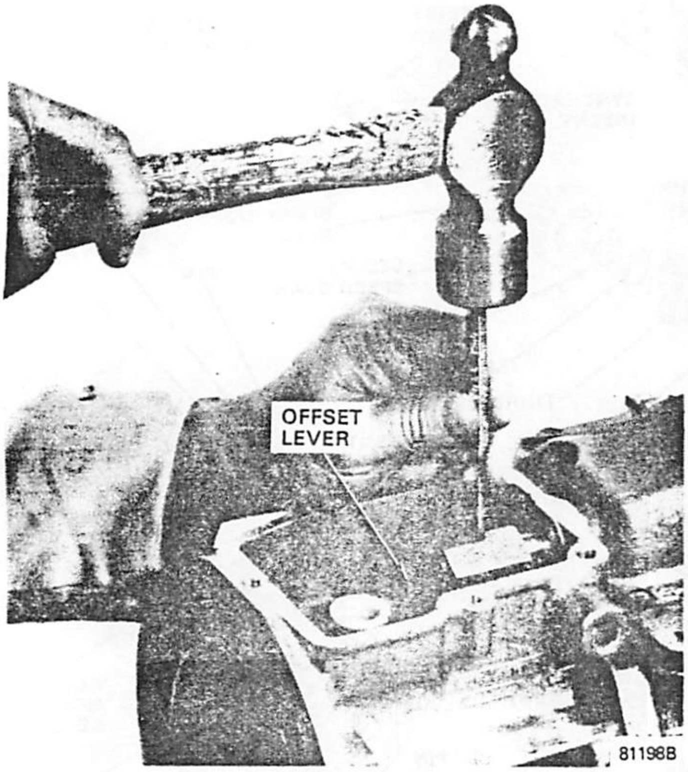

Fig. 2B-5 Offset Lever Pin Removal

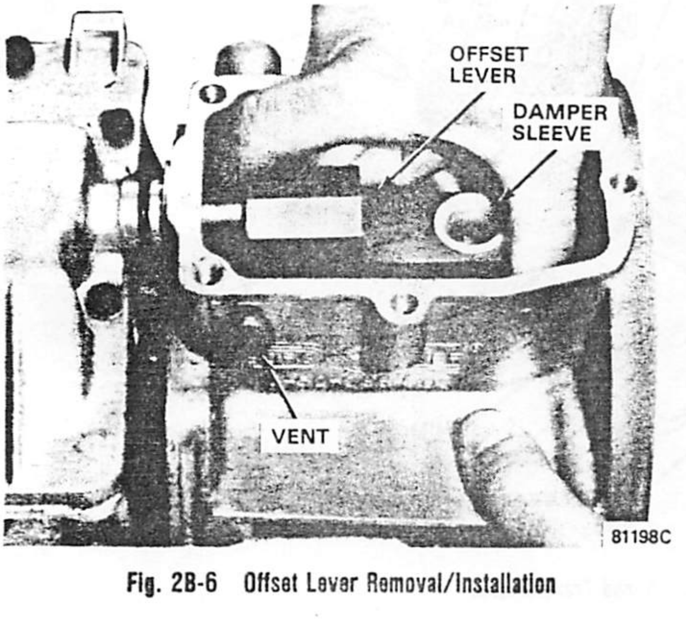

Fig. 2B-6 Offset Lever Removal/Installation

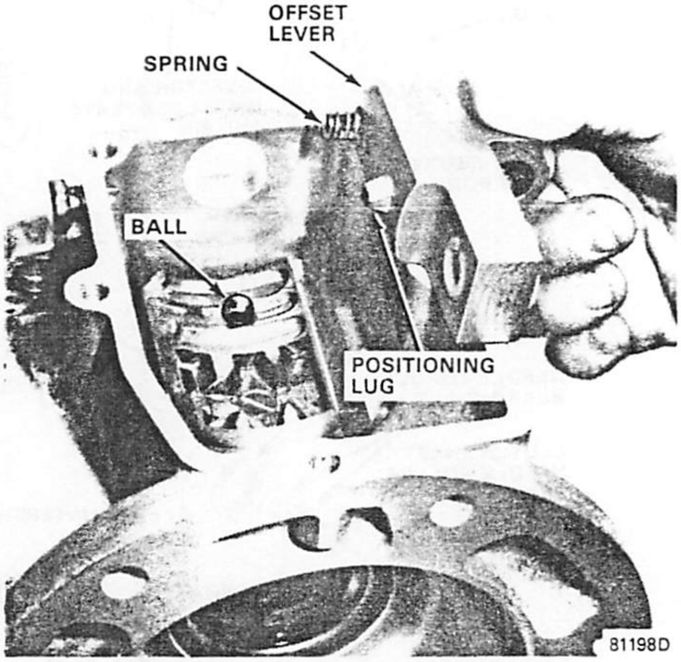

Fig. 2B-7 Offset Lever Spring and Ball

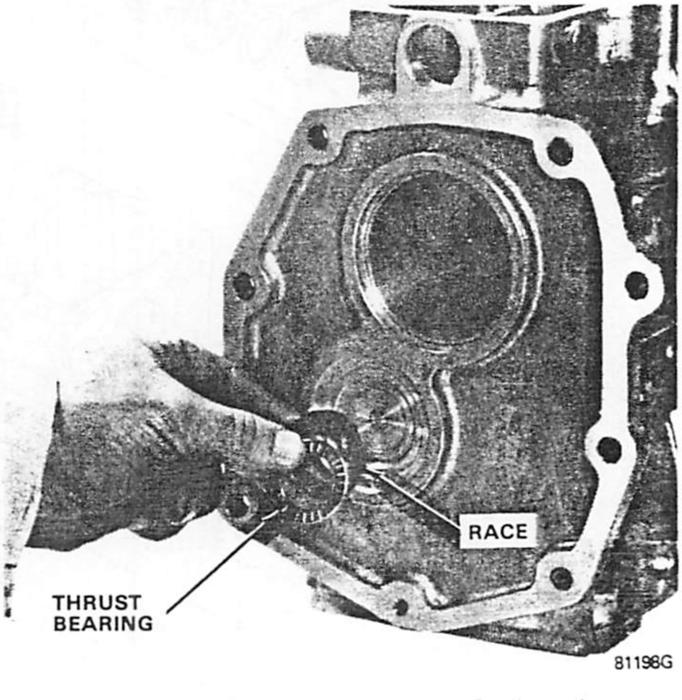

Fig. 2B-8 Countershaft Rear Thrust Bearing and Race Removal/Installation

(18) Remove reverse idler shaft roll pin using hammer and pin punch (fig. 2B-19).

(19) Remove reverse idler shaft and gear (fig. 2B-19). Note position of gear for assembly reference.

(20) Remove countershaft front bearing using arbor press.

(21) Remove clutch shaft front bearing using Bearing Removal Tool J-29721 and J-22912 (fig. 2B-20).

(22) Remove rear adapter housing seal using flat drift and hammer.

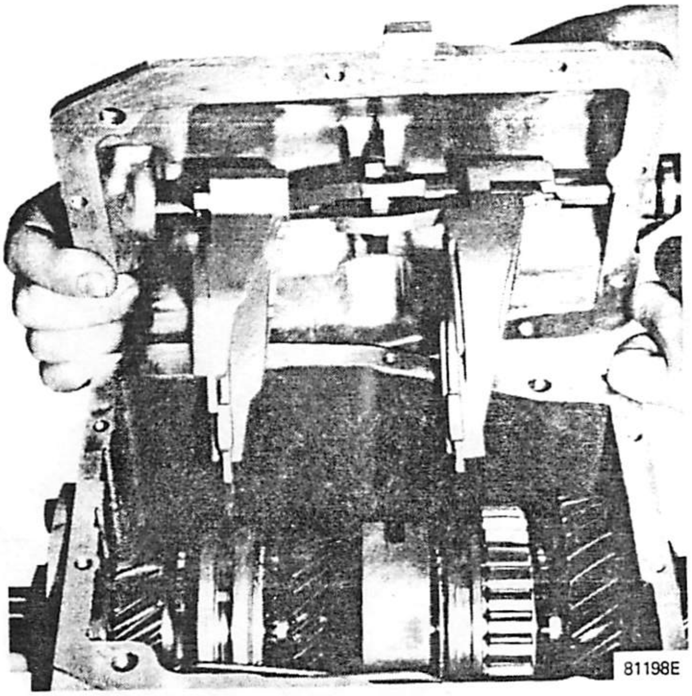

Fig. 2B-9 Transmission Cover Removal/Installation

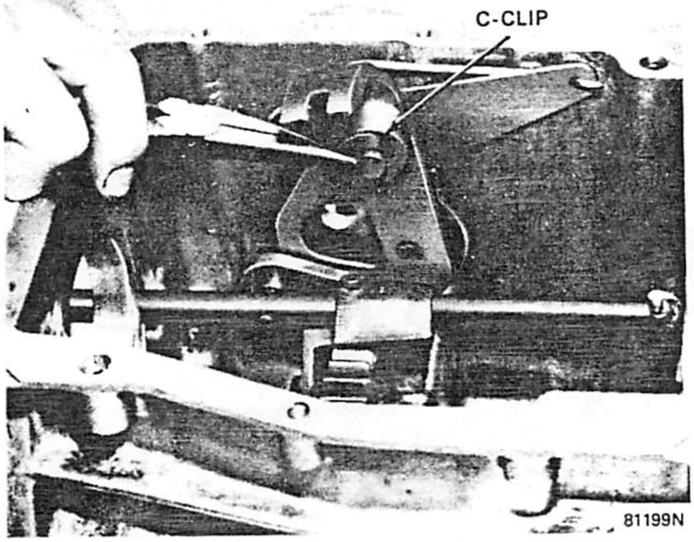

Fig. 2B-10 Reverse Lever C-Clip Removal/Installation

(23) Remove backup lamp switch from transmission case.

Disassembly—Output Shaft Geartrain

(1) Remove thrust bearing washer from front end of output shaft.

(2) Scribe alignment marks on third-fourth synchronizer hub and sleeve for assembly reference (fig. 2B-21).

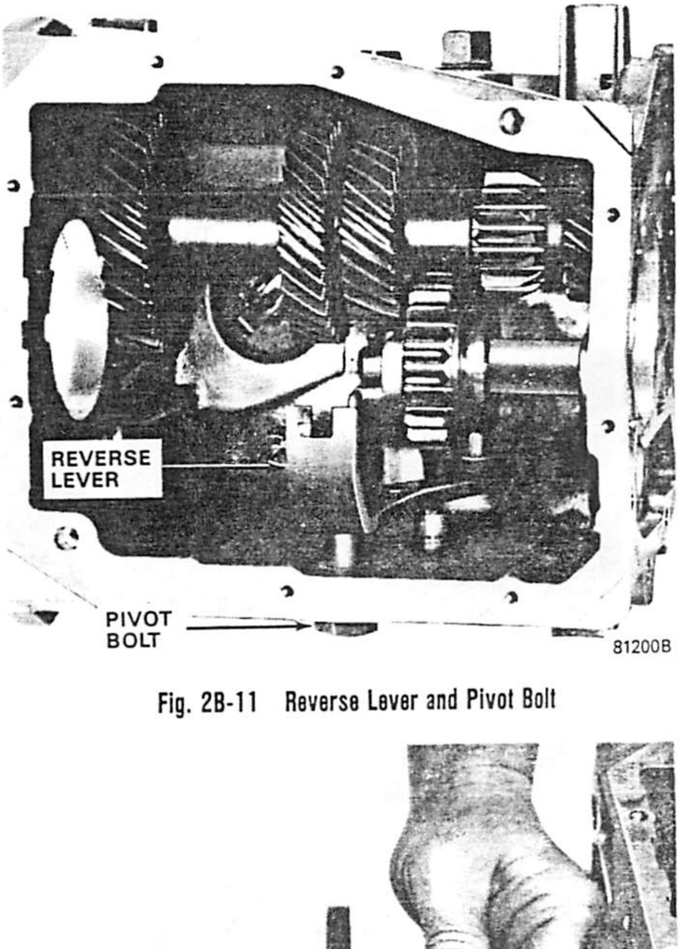

Fig. 2B-11 Reverse Lever and Pivot Bolt

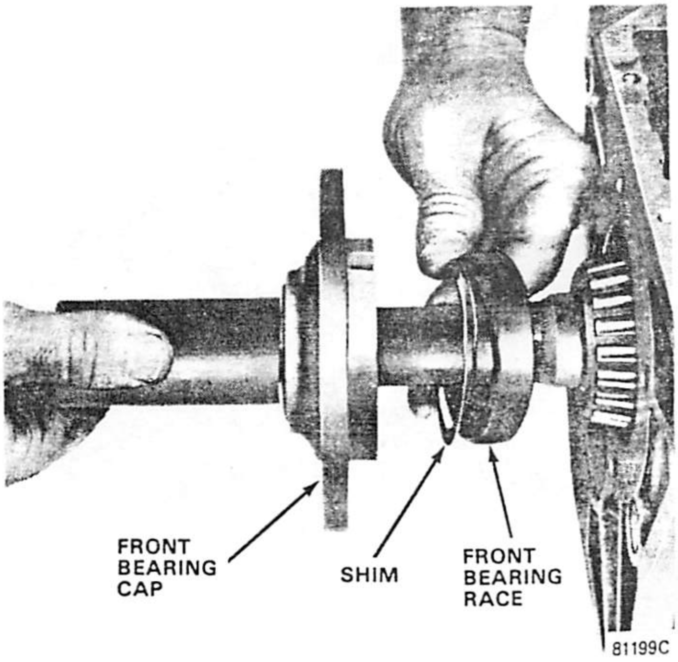

Fig. 2B-12 Front Bearing Cap, Shim and Race Removal/Installation

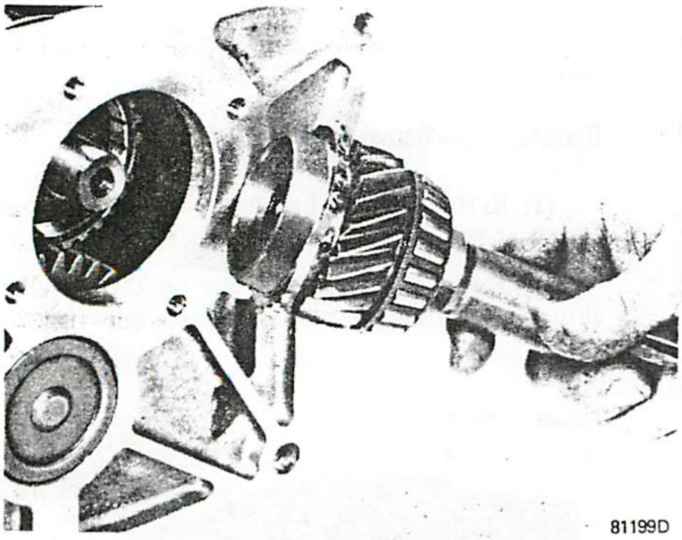

Fig. 2B-13 Clutch Shaft Removal/Installation

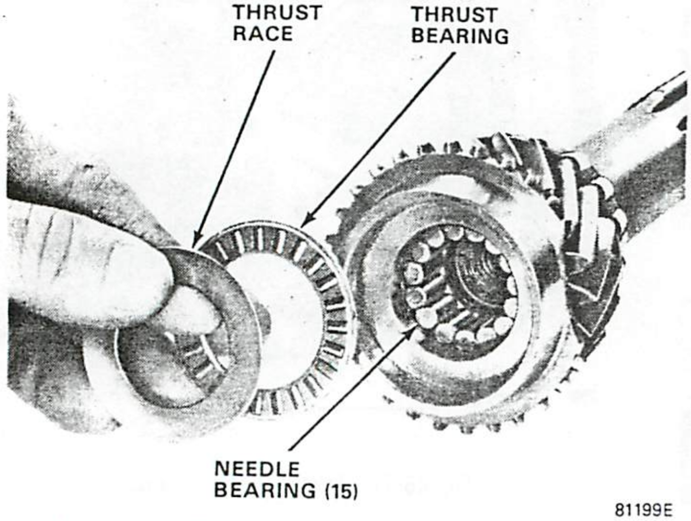

Fig. 2B-14 Clutch Shaft Roller Bearing, Thrust Bearing and Race Removal/Installation

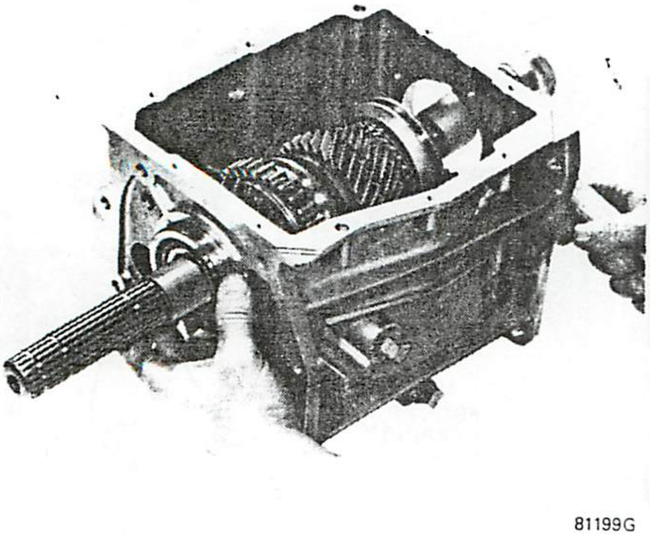

Fig. 2B-15 Output Shaft Bearing Race Removal

(3) Remove third-fourth synchronizer blocking ring, sleeve and hub as assembly. Note position of hub and sleeve for assembly reference.

(4) Remove third-fourth synchronizer, insert springs, remove inserts and remove sleeve from hub.

(5) Remove third gear from *shaft.*

(6) Remove snap ring retaining second gear on shaft (fig. 2B-22) and remove tabbed second gear thrust washer and second gear (fig. 2B-23).

(7) Remove output shaft bearing using Puller Set J-29721 and adapters 293-39 (fig. 2B-24).

(8) Remove first gear thrust washer, first gear roll pin, first gear and blocking ring (fig. 2B-25). Use diagonal cutters to remove roll pin.

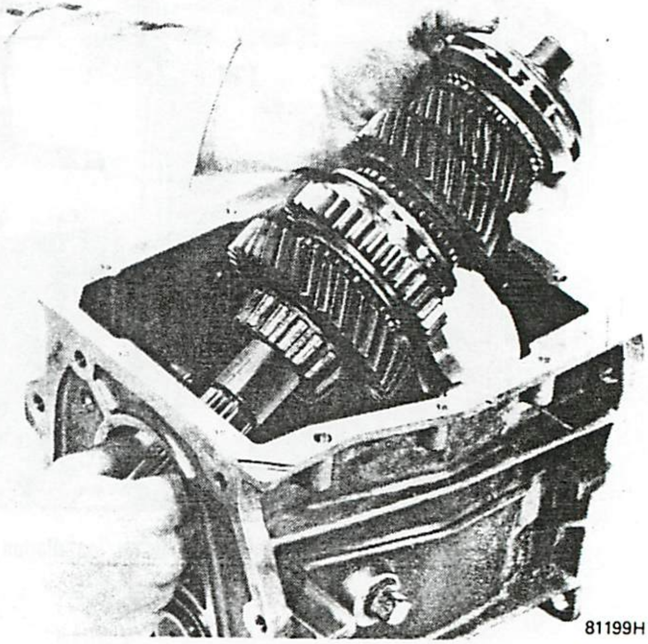

Fig. 2B-16 Output Shaft Removal/Installation

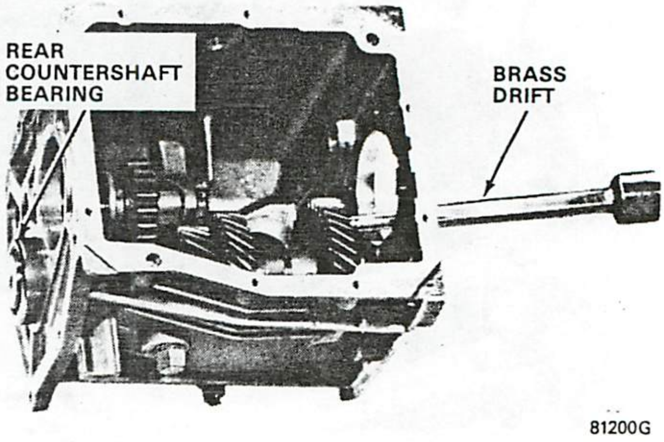

Fig. 2B-17 Countershaft Rear Bearing Removal

(9) Scribe alignment marks on first-second gear synchronizer sleeve and output shaft hub for assembly reference (fig. 2B-21).

(10) Remove insert spring and inserts from first-reverse sliding gear and remove gear from output shaft hub.

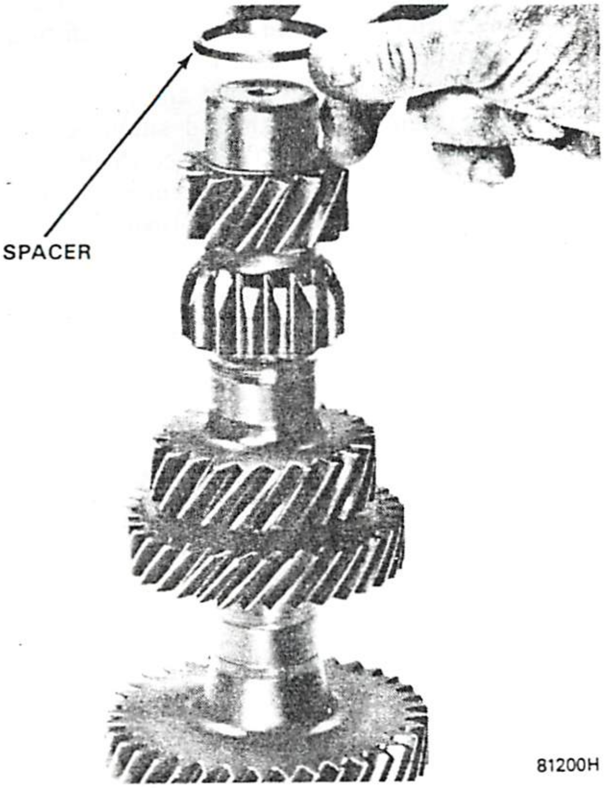

Fig. 2B-18 Countershaft Rear Spacer Removal/Installation

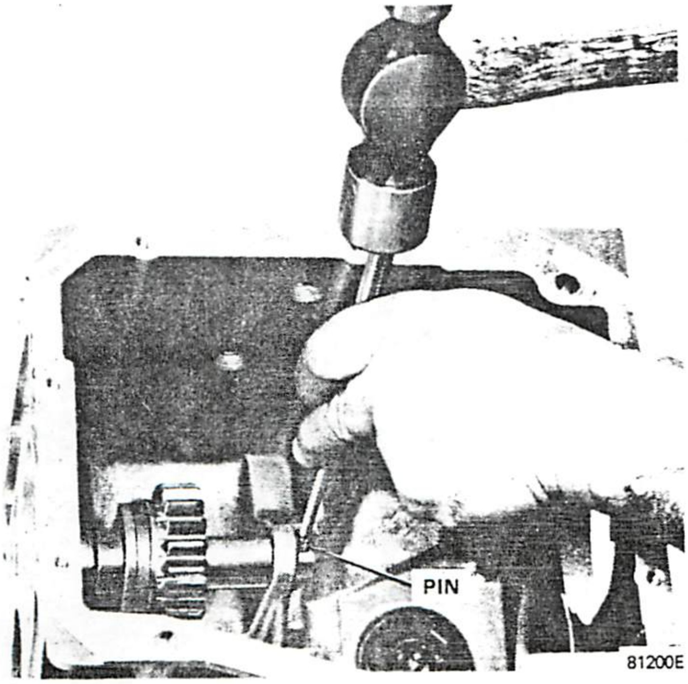

Fig. 2B-19 Reverse Idler Gear Shaft Removal/Installation

CAUTION: *Do not attempt to remove the first-second-reverse hub from the output shaft. The hub and shaft are assembled and machined as a matched set during manufacture to insure concentricity.*

Disassembly—Transmission Cover Assembly

(1) Place selector arm plates and shift rail in neutral position (centered).

(2) Rotate shift rail counterclockwise until selector arm disengages from selector arm plates and selector arm roll pin is accessible (fig. 2B-26).

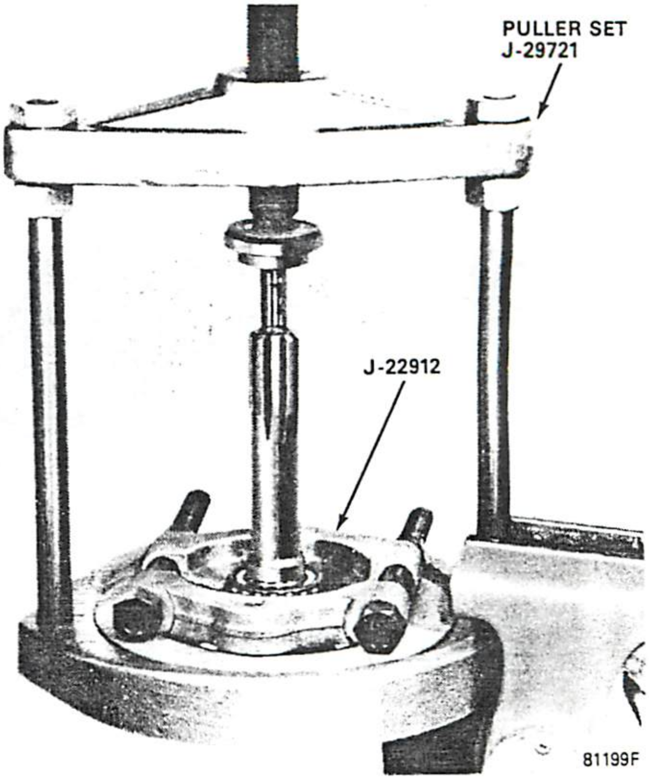

Fig. 2B-20 Clutch Shaft Bearing Removal

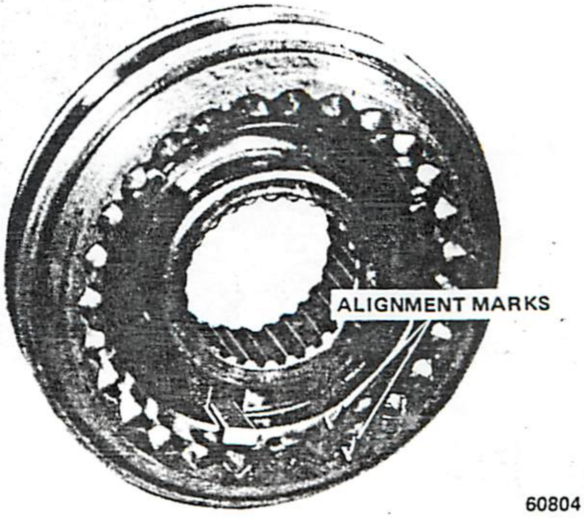

Fig. 2B-21 Marking Synchronizer Assembly

(3) Pull shift rail rearward until selector contacts first-second shift fork.

(4) Remove selector arm roll pin using 3/16 inch (5 mm) diameter pin punch and remove shift rail (fig. 2B-26).

(5) Remove shift forks, selector arm plates, selector arm and roll pin and interlock plate.

(6) Remove shift rail oil seal and O-ring using screwdriver (fig. 2B-27).

(7) Remove shift rail plug using hammer and punch.

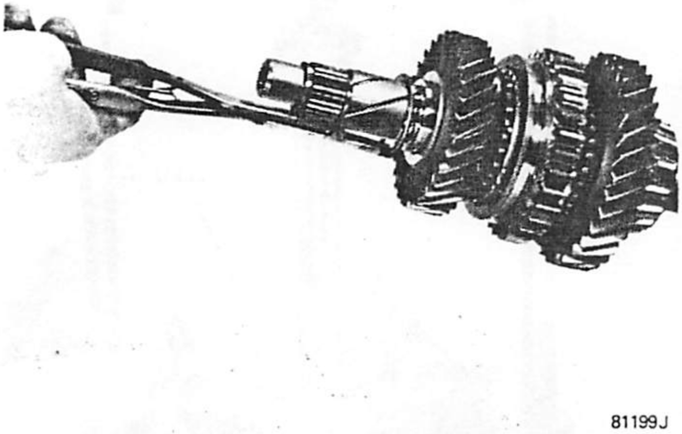

Fig. 2B-22 Second Gear Snap Ring Removal/Installation

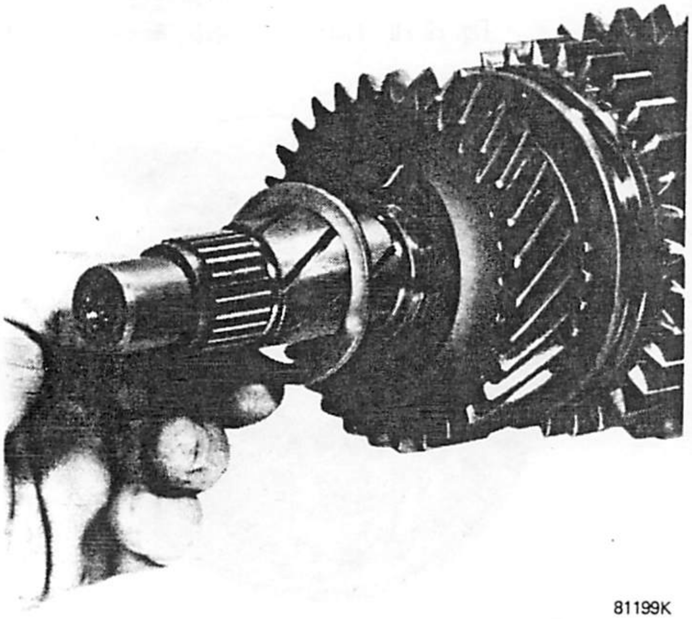

Fig. 2B-23 Second Gear Thrust Washer Removal/Installation

(8) Remove nylon inserts and selector arm plates from shift forks. Note position of inserts and plates for assembly reference.

CLEANING AND INSPECTION

Thoroughly wash all parts in solvent and dry them with compressed air. Do not dry the front or rear bearing with compressed air. Allow them to air dry or wipe them dry with a clean shop cloth.

Clean the needle thrust and roller bearings by wrapping them in a cloth and submerging the cloth and bearings in solvent. Or, place them in a shallow parts cleaning tray and cover them with solvent. Allow the bearings to air dry or wipe them dry with a clean shop cloth.

Inspect the transmission case, cover and extension housing. Replace any of these parts if they exhibit the following conditions:

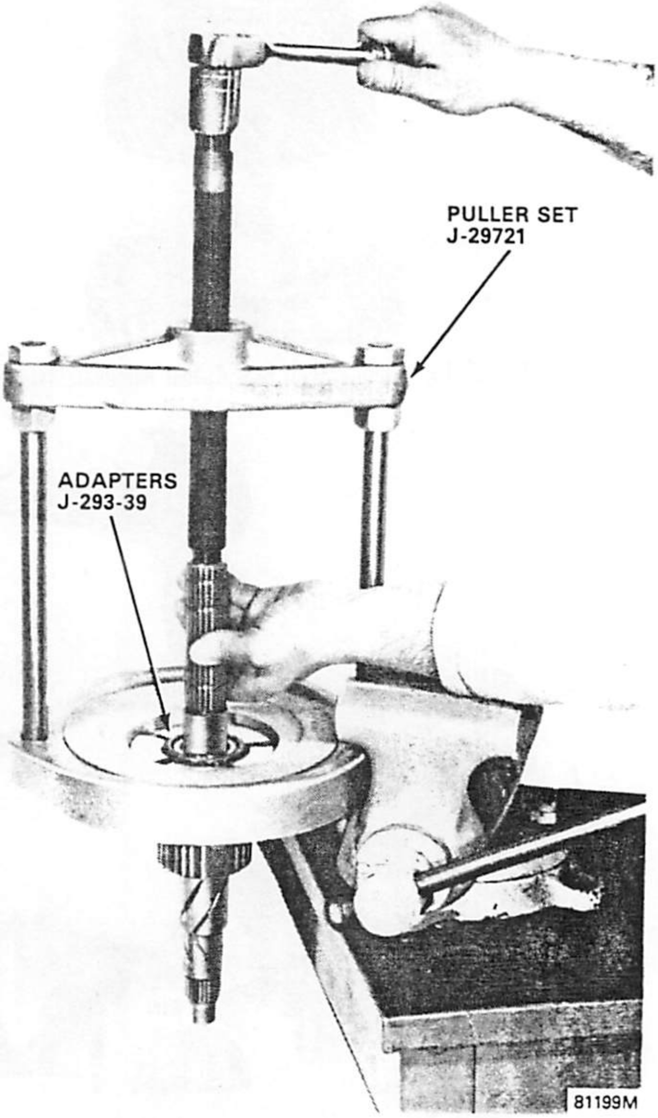

Fig. 2B-24 Output Shaft Bearing Removal

- Cracks in bores, sides, bosses or at bolt holes.
- Stripped threads in bolt holes.
- Nicks, burrs, rough surfaces in shaft bores or on gasket surfaces.

Inspect the geartrain and shift mechanism. Replace any parts that exhibit the following conditions:

- Broken, chipped or worn gear teeth.
- Bent or broken inserts.
- Weak or broken insert springs.
- Damaged roller thrust or needle bearings, or bearing bores in countershaft gear or clutch shaft.

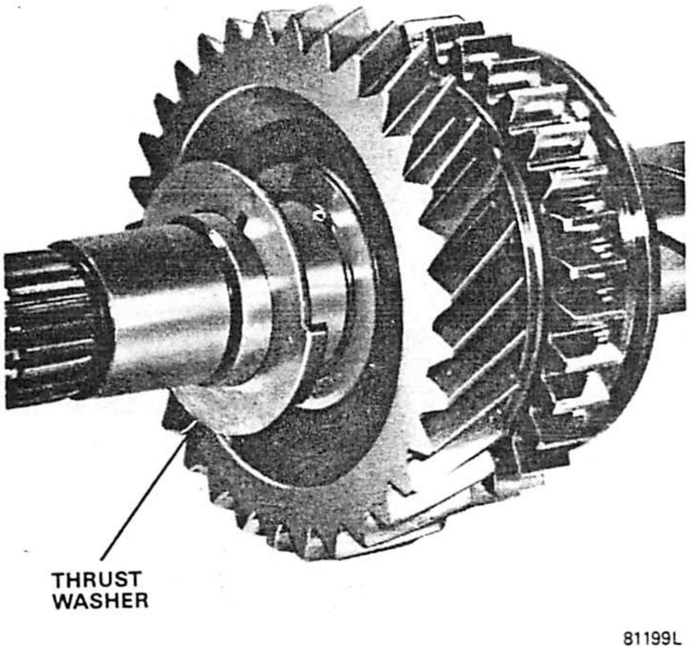

Fig. 2B-25 First Gear Thrust Washer Removal/Installation

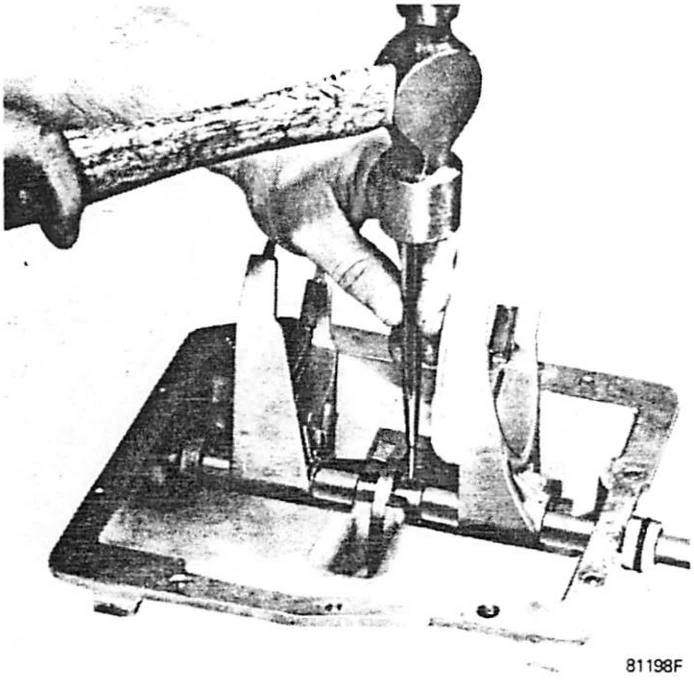

Fig. 2B-26 Roll Pin Removal

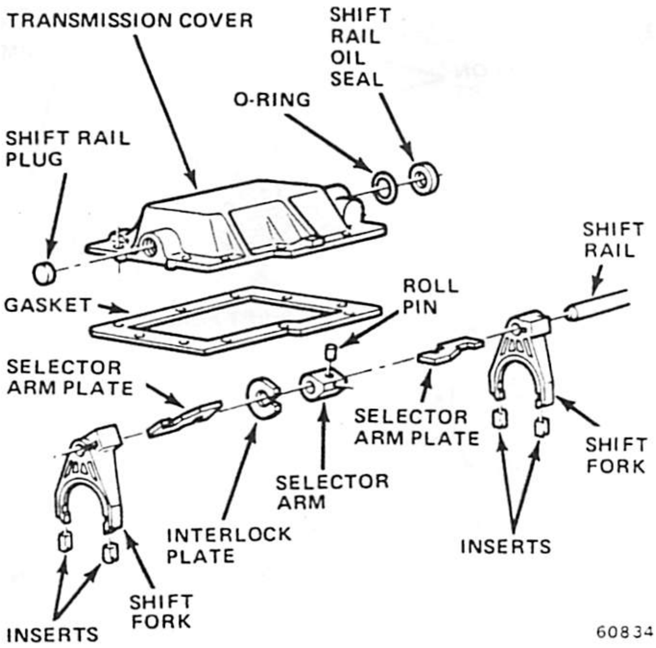

Fig. 2B-27 Shift Control Housing Assembly

- Worn or galled countershaft and hub, clutch shaft or reverse idler gear shaft.
- Worn thrust washers.
- Nicked, broken or worn output or clutch shaft splines.
- Bent, distorted, or weak snap rings.
- Worn bushing in reverse idler gear.
- Rough, galled, or broken front or rear bearing.
- Worn shift fork inserts.
- Broken, cracked, or worn shift forks.
- Bent, worn, or galled shift rail.
- Worn, bent, or broken selector arms, plates, or interlock.
- Worn, bent, broken or stripped offset lever or worn lever insert.

TRANSMISSION ASSEMBLY

Assembly—Transmission Cover

(1) Install nylon inserts and selector arm plates in shift forks (fig. 2B-28).

(2) Install shift rail plug. Coat edges of plug with sealer before installing.

(3) Coat shift rail and shift rail bores with petroleum jelly and insert shift rail in cover. Install rail until end of rail is flush with inside edge of cover.

(4) Position first-second shift fork in cover with fork offset facing rear of cover and push shift rail through fork.

NOTE: *The first-second shift fork is the larger of the two forks.*

(5) Position selector arm and C-shaped interlock plate in cover and insert shift rail through arm. Widest

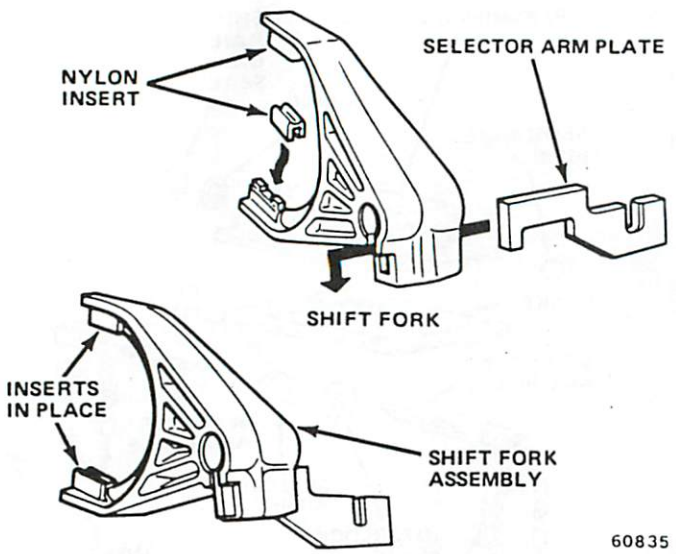

Fig. 2B-28 Assembling Shift Forks and Selector Arm Plates

part of interlock plate must face away from cover, and selector arm roll pin hole must face downward and toward rear of cover.

(6) Position third-fourth shift fork in cover with fork offset facing rear of cover. Third-fourth shift fork selector arm plate must be positioned under first-second shift fork selector arm plate.

(7) Insert shift rail through third-fourth shift fork and into front shift rail bore in cover.

(8) Rotate shift rail until selector arm plate at forward end of rail faces away from, but is parallel to cover.

(9) Align roll pin holes in selector arm and shift rail and install roll pin. Be sure roll pin is installed flush with surface of selector arm to prevent pin from contacting selector arm plates during shifts.

(10) Install O-ring in groove of shift rail oil seal.

(11) Install shift rail oil seal as follows:

(a) Install Oil Seal Protector Tool J-26628-2 over threaded end of shift rail (fig. 2B-29, View A).

(b) Lubricate lip of oil seal with petroleum jelly and slide seal over protector and onto shift rail.

(c) Seat oil seal in transmission cover using Oil Seal Installer Tool J-26628-1 (fig. 2B-29, View B).

Assembly—Output Shaft Geartrain

NOTE: *If any output shaft gear is replaced, the countershaft gear must also be replaced to maintain proper gear mesh and avoid noisy operation.*

(1) Coat output shaft and gear bores with transmission lubricant.

(2) Install and align first-second synchronizer sleeve on output shaft hub using reference marks made at disassembly.

(3) Install three first-second synchronizer inserts and two insert springs in first-reverse synchronizer sleeve. Engage tang end of each insert spring in same synchronizer insert but position open ends of springs to face 180 degrees from one another (fig. 2B-30). Be sure sleeve and hub are aligned using assembly reference marks.

(4) Install blocking ring and second gear on mainshaft.

(5) Install tabbed thrust washer and second gear snap ring on mainshaft (figs. 2B-22 and 2B-23). Be sure washer tab is properly seated in mainshaft notch.

(6) Install blocking ring and first gear on output shaft.

(7) Install first gear roll pin in output shaft (fig. 2B-31).

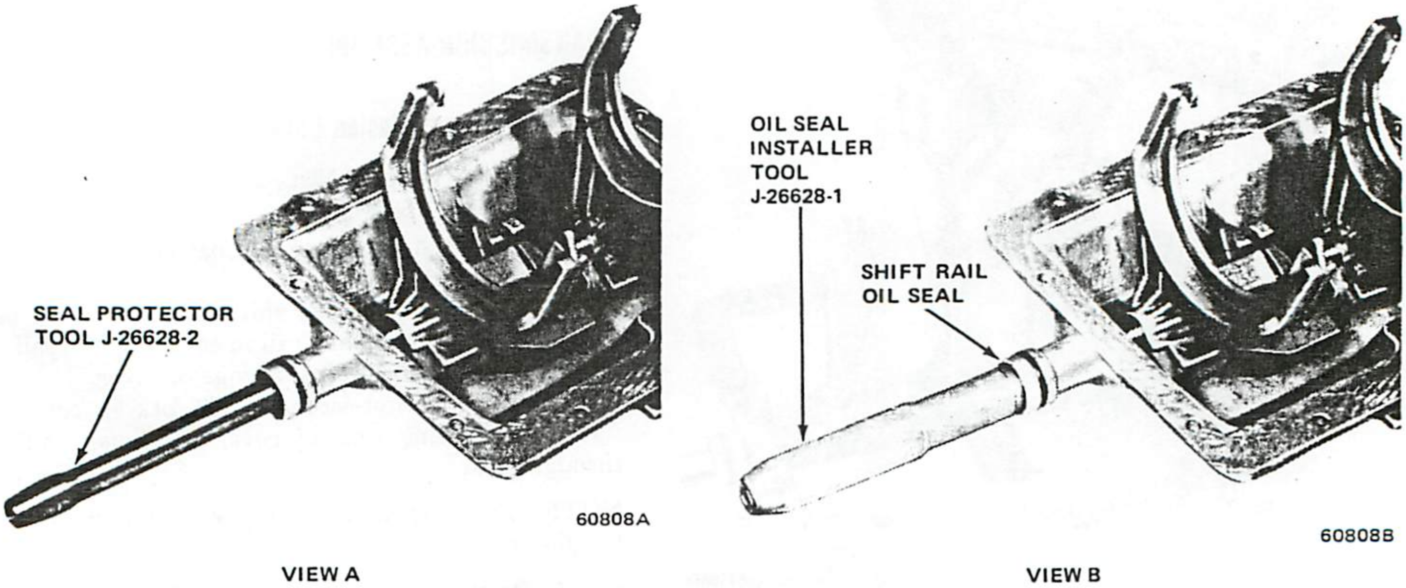

VIEW A

VIEW B

Fig. 2B-29 Shift Rail Oil Seal Installation

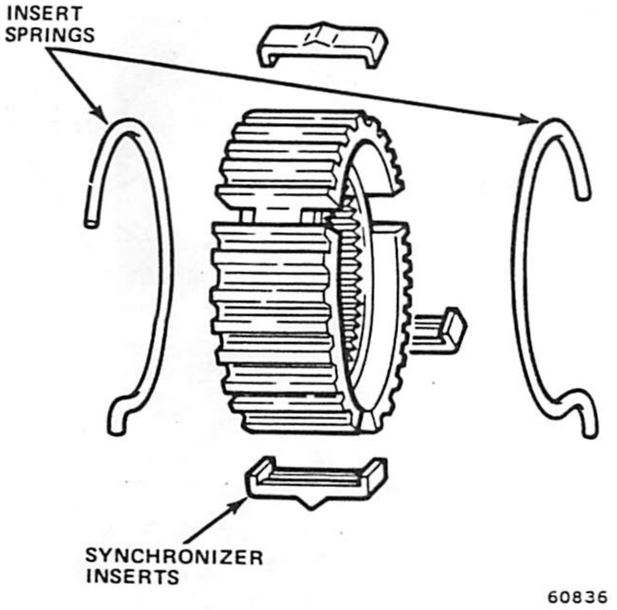

Fig. 2B-30 Synchronizer Insert Spring Installation

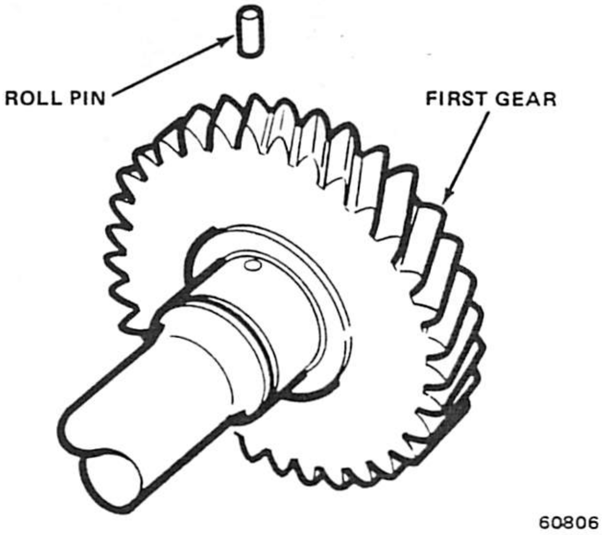

Fig. 2B-31 First Gear Roll Pin Location

(8) Install first gear thrust washer.

(9) Install rear bearing on output shaft using Tool J-2995 and press (fig. 2B-32).

(10) Install third gear, third and fourth gear synchronizer hub inserts and sleeve on shaft. Hub offset must face forward.

(11) Install thrust bearing washer on forward end of output shaft.

Assembly—Transmission Case

CAUTION: *Except for the gearshift lever attaching bolts and fill plug, all threaded holes and bolts used in the Model T4 Transmission are metric sizes. Do not attempt to substitute a different thread-type bolt if the original ones are lost.*

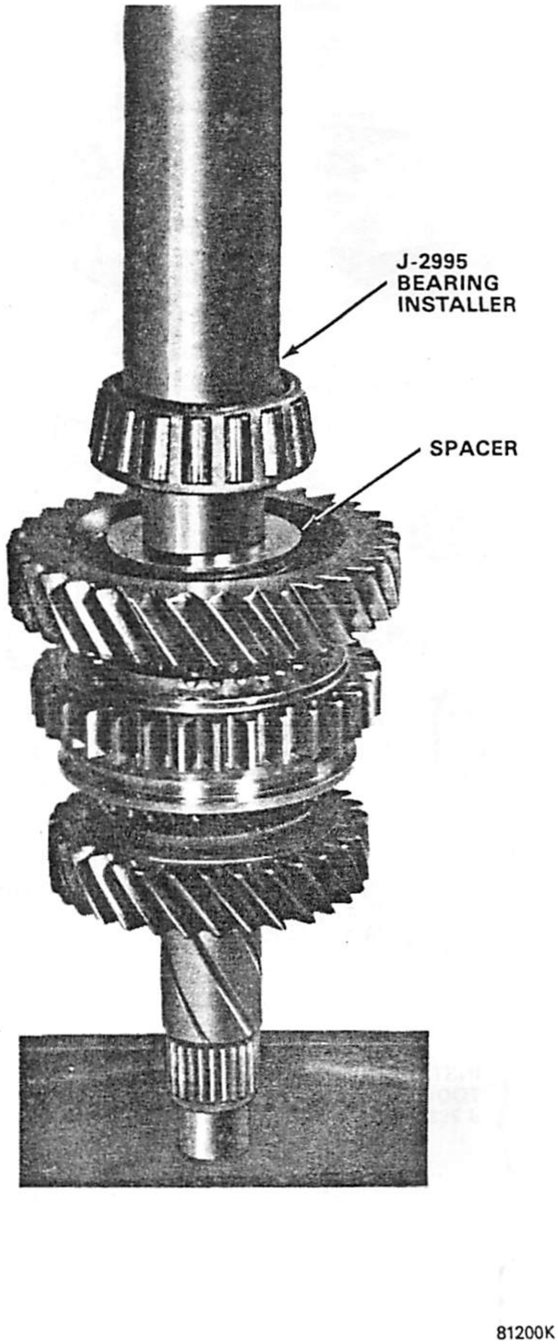

Fig. 2B-32 Rear Output Shaft Bearing Installation

(1) Coat countershaft front bearing outer cage with Loctite 601, or equivalent, and install countershaft front bearing flush with case using arbor press (fig. 2B-33).

(2) Coat countershaft tabbed thrust washer with petroleum jelly. Install thrust washer so tab engages corresponding depression in case.

(3) Tip case on end and install countershaft in front bearing bore.

(4) Install countershaft rear bearing spacer (fig. 2B-18).

(5) Coat countershaft rear bearing with petroleum jelly and install bearing using installer Tool J-29895 and mallet (fig. 2B-34).

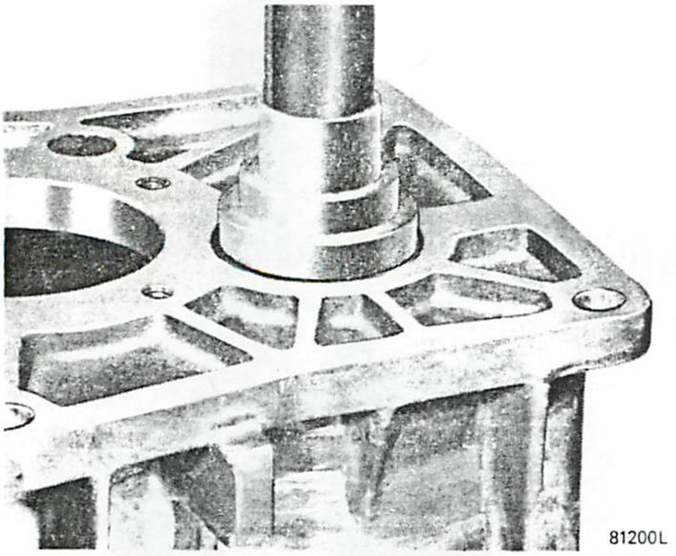

Fig. 2B-33 Front Countershaft Bearing Installation

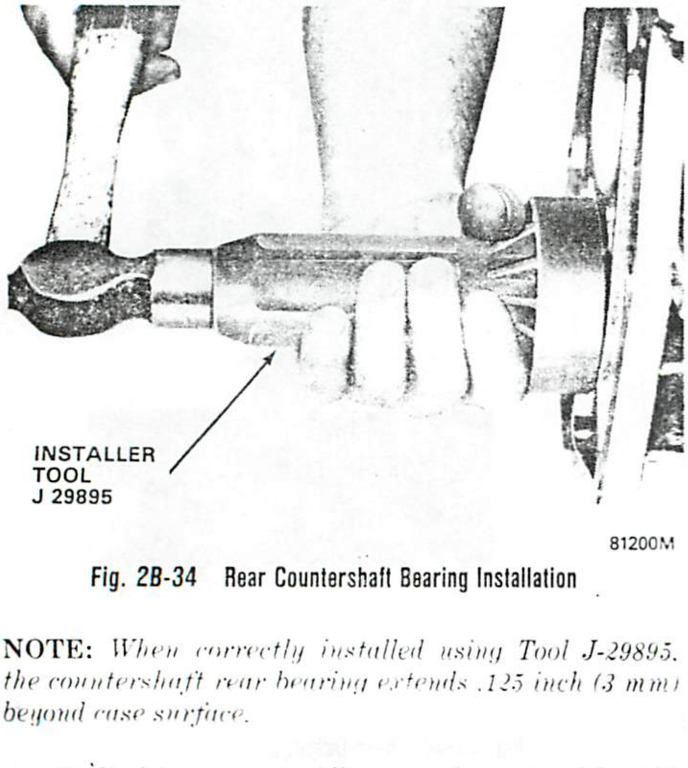

Fig. 2B-34 Rear Countershaft Bearing Installation

NOTE: *When correctly installed using Tool J-29895, the countershaft rear bearing extends .125 inch (3 mm) beyond case surface.*

(6) Position reverse idler gear in case with shift lever groove facing rear of case. Install reverse idler shaft from rear of case and install retaining roll pin in shaft (fig. 2B-19).

(7) Install assembled output shaft in case.

(8) Install front clutch shaft bearing on clutch shaft using Tool J-2995 and arbor press (fig. 2B-35).

(9) Coat 15 pilot roller bearings with petroleum jelly and install in clutch shaft (fig. 2B-14).

(10) Install thrust bearing and race in clutch shaft (fig. 2B-14).

(11) Install fourth gear blocker ring on output shaft.

(12) Install rear output shaft bearing race.

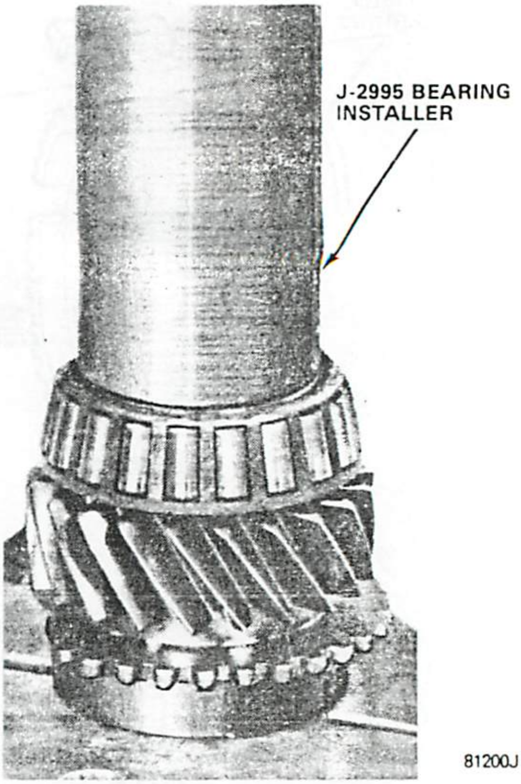

Fig. 2B-35 Clutch Shaft Bearing Installation

(13) Install clutch shaft in case and engage shaft in third-fourth synchronizer sleeve and blocking ring.

(14) Install replacement oil seal in front bearing cap using Tool J-26625 (fig. 2B-36).

(15) Install replacement oil seal in rear adapter housing using Tool J-29184 (fig. 2B-37).

(16) Install front bearing race in front bearing cap. Do not install shims at this time.

(17) Install front bearing cap. Do not apply sealer at this time.

(18) Install reverse lever, pivot pin and retaining C-clip. Coat pivot pin threads with sealer. Be sure reverse lever fork is engaged in reverse idler gear.

(19) Coat countershaft rear bearing race and thrust bearing with petroleum jelly and install in extension/adapter housing.

(20) Temporarily install adapter housing. Do not seal housing to case or tighten bolts to final torque values at this time.

(21) Turn transmission case on end (fig. 2B-38). Mount dial indicator on adapter housing with indicator stylus on end of output shaft.

(22) Rotate clutch and output shaft and zero dial indicator.

(23) Pull upward on output shaft until end play is removed. Read end play dimension on dial indicator.

NOTE: *To completely eliminate output shaft and clutch shaft end play, bearings must be preloaded from .001 to .005 inch (0.03 to 0.13 mm).*

(24) Select shim pack measuring .001 to .005 inch (0.03 to 0.13 mm) **thicker** than the end play measured in Step 23.

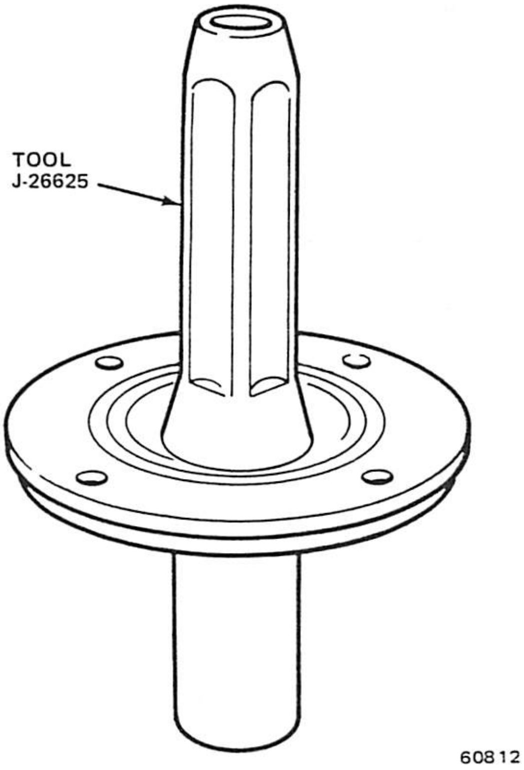

Fig. 2B-36 Front Bearing Cap Seal Installation

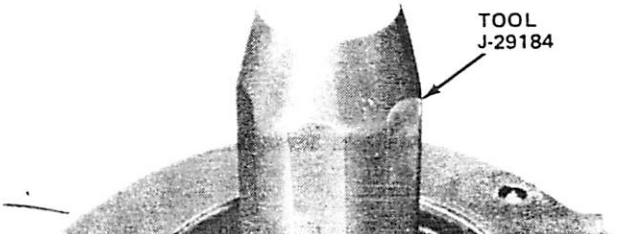

Fig. 2B-37 Adapter Housing Oil Seal Installation

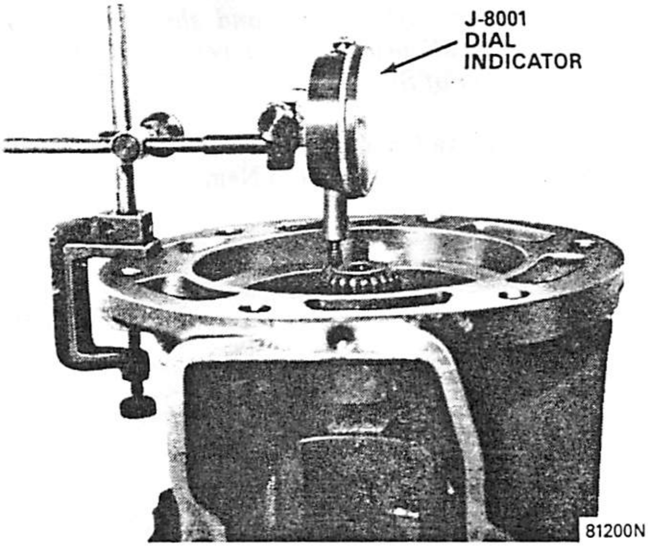

Fig. 2B-38 Measuring End Play

(25) Place transmission horizontally on workbench and remove front bearing cap and front bearing race.

(26) Add shims to bearing cap to obtain necessary preload and install clutch shaft bearing race in cap.

(27) Apply bead of RTV sealant, or equivalent, on case mating surface of front bearing cap. Install front bearing cap using reference marks made during disassembly and tighten retaining bolts to 15 foot-pounds (20 N•m) torque.

(28) Recheck end play. There must be no end play.

(29) Remove dial indicator from adapter housing.

(30) Remove adapter housing.

(31) Move shift forks on transmission cover and synchronizer rings inside transmission to the neutral position.

(32) Apply bead of RTV sealant, or equivalent, to cover mating surface of transmission.

(33) Lower cover assembly, at slightly off center attitude, onto case while aligning *shift forks* and synchronizer sleeves. Center cover on case to engage reverse relay lever and install two dowel bolts in cover. Install remaining bolts and tighten all cover bolts to 9 foot-pounds (12 N•m) torque.

NOTE: *The offset lever-to-shift rail roll pin hole is in a vertical position when Steps 30 and 32 are performed correctly.*

(34) Apply bead of RTV sealant, or equivalent, to adapter housing-to-transmission case mating surface.

(35) Install adapter housing over output shaft and shift rail to a position where shift rail just enters shift cover opening.

(36) Install detent spring into offset lever. Place steel ball in neutral guide plate detent (fig. 2B-7). Apply pressure on steel ball with detent spring and offset lever and slide offset lever on shift rail and seat adapter housing against transmission case.

NOTE: *The offset lever and shift rail roll pin holes should be aligned and in a vertical position following completion of Step 35.*

(37) Install and tighten adapter housing retaining bolts to 25 foot-pounds (34 N•m) torque.

(38) Install roll pin in offset lever and shift rail (fig. 2B-5).

(39) Install damper sleeve in offset lever.

(40) Coat backup lamp switch threads with RTV sealant, or equivalent, and install switch in case.

SPECIFICATIONS

Transmission Specifications Model T4

Lubrication	
Level	to bottom of fill hole
Inspect Correct Fill Levels	5,000 mi/5 mo/8 000 km initially, then every 7,500 mi/7½ mo/12 000 km thereafter
Recommended Lubricants	AMC/Jeep Automatic Transmission Fluid or equivalent labeled Dexron II®
Lubricant Capacity	
U.S. Measure	3.5 pints
Imperial Measure	2.9 pints
Metric Measure	1.7 liters

60790

Torque Specifications Model T4

Service Set-To Torques should be used when assembling components. Service In-Use Recheck Torques should be used for checking a pre-tightened item.

	USA (ft-lbs)		Metric (N·m)	
	Service Set-To Torque	Service In-Use Recheck Torque	Service Set-To Torque	Service In-Use Recheck Torque
Backup Lamp Switch	15	12-18	20	16-24
Adapter Housing Bolt	13	11-15	18	15-20
Fill Plug	20	15-25	27	20-34
Front Bearing Cap Bolt	13	11-15	18	15-20
Reverse Lever Pivot Bolt	20	15-25	27	20-34
Shift Control Housing Bolt	10	7-12	14	9-16
Transmission Cover Bolt	7	5-9	10	7-12
Transmission-to-Clutch Housing Bolt	55	45-65	75	61-65
Universal Joint Clamp Strap Bolt	14	12-18	19	16-24

All Torque values given in foot-pounds and newton meters with dry fits unless otherwise specified.

60791

MODEL T5 5-SPEED TRANSMISSION

TRANSMISSION DISASSEMBLY

CAUTION: *Except for the gearshift lever attaching bolts and fill plug, all threaded holes and bolts used in the Model T5 Transmission case have metric threads. If replacement bolts are required during service, use only those of the same size and length as the originals.*

(1) Remove drain bolt on transmisson case and drain lubricant (fig. 2B-39).

(2) Using pin punch and hammer, remove roll pin attaching offset lever to shift rail (fig. 2B-5).

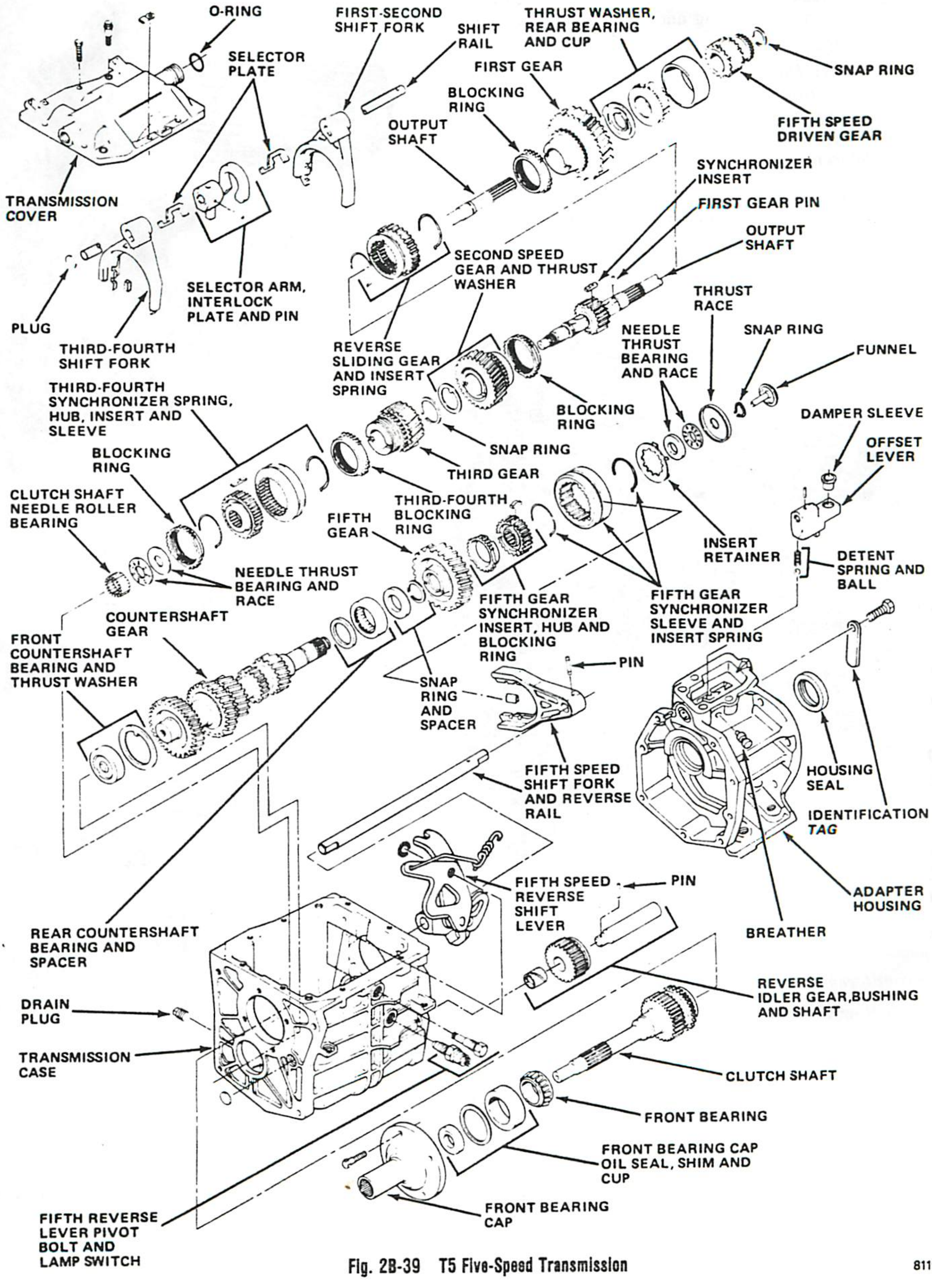

Fig. 2B-39 T5 Five-Speed Transmission

81197B

(3) Remove adapter housing-to-transmission case bolts and remove housing and offset lever as assembly (fig. 2B-6).

CAUTION: *Do not attempt to remove the offset lever while the adapter housing is still bolted in place. The lever has a positioning lug engaged in the housing detent plate which prevents moving the lever far enough forward for removal.*

(4) Remove detent ball and spring from offset lever and remove roll pin from adapter housing or offset lever (fig. 2B-7).

(5) Remove plastic funnel, thrust bearing race and thrust bearing from rear of countershaft (figs. 2B-40 and 2B-41).

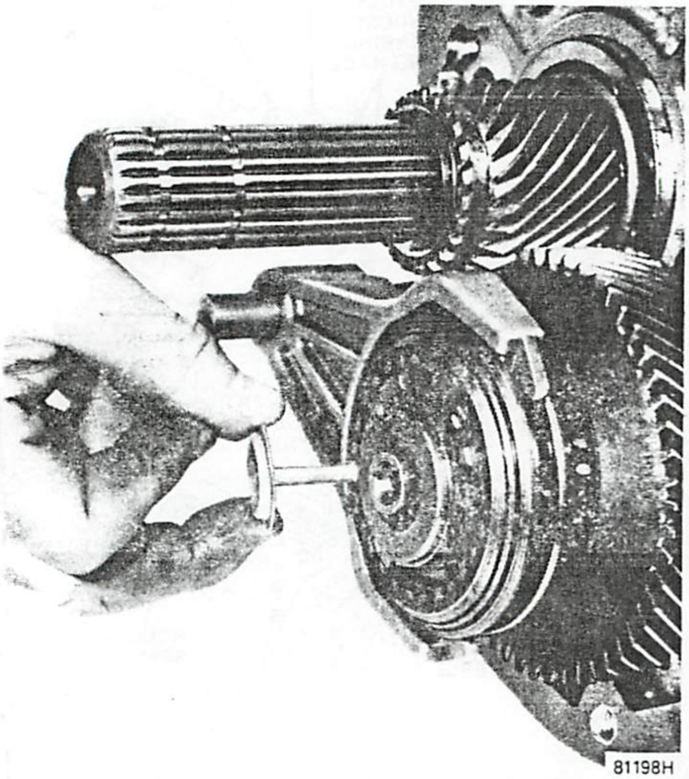

Fig. 2B-40 Funnel Removal/Installation

NOTE: *The countershaft rear thrust bearing, bearing washer and plastic funnel may be found on the end of the countershaft or inside the adapter housing.*

(6) Remove bolts attaching transmission cover and shift fork assembly and remove cover (fig. 2B-9).

NOTE: *Two of the transmission cover attaching bolts are alignment-type dowel bolts. Note the location of these bolts for assembly reference.*

(7) Remove roll pin from fifth gear shift fork using hammer and punch (fig. 2B-42).

CAUTION: *Place wood block under the fifth gearshift fork during roll pin removal to prevent damage to fifth gear/reverse shift rail.*

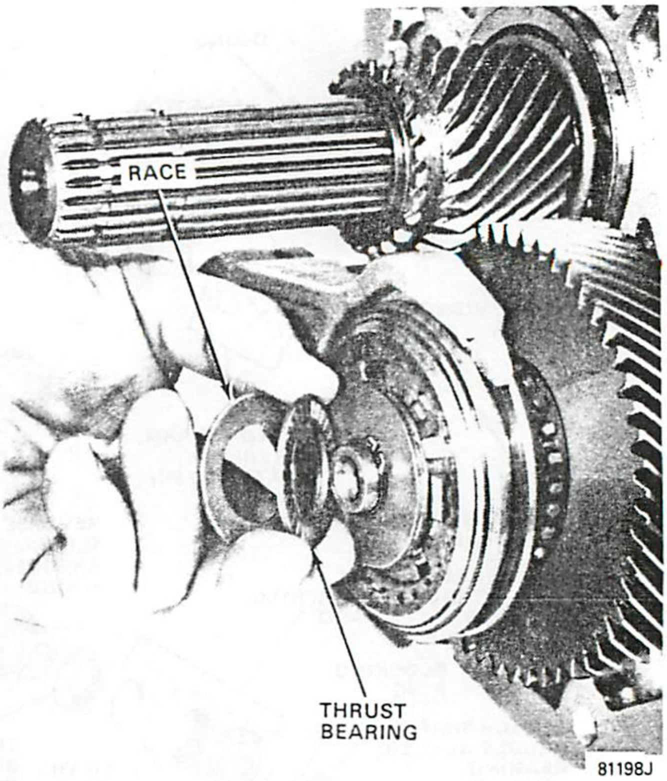

Fig. 2B-41 Countershaft Thrust Bearing and Race Removal/Installation

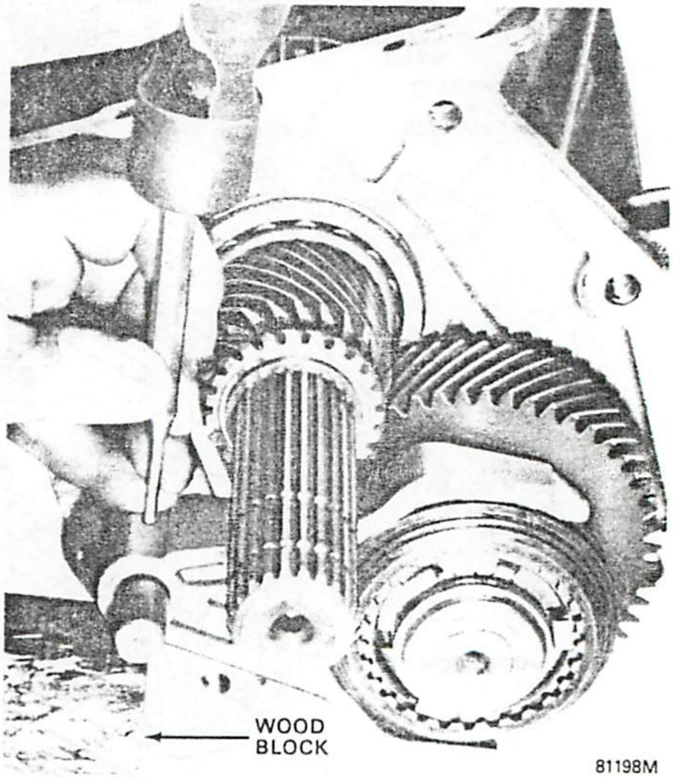

Fig. 2B-42 Fifth Gearshift Fork Roll Pin Removal/Installation

(8) Remove fifth synchronizer gear snap ring, shift fork, fifth gear synchronizer sleeve, blocking ring and fifth speed drive gear from rear of countershaft (figs. 2B-43 and 2B-44).

(9) Remove fifth gear insert retainer synchronizer springs and inserts from sleeve and hub. Mark position of hub and sleeve for assembly reference.

(10) Remove snap ring and remove fifth speed driven gear from rear of output shaft using Puller Assembly J-25215 (figs. 2B-45 and 2B-46).

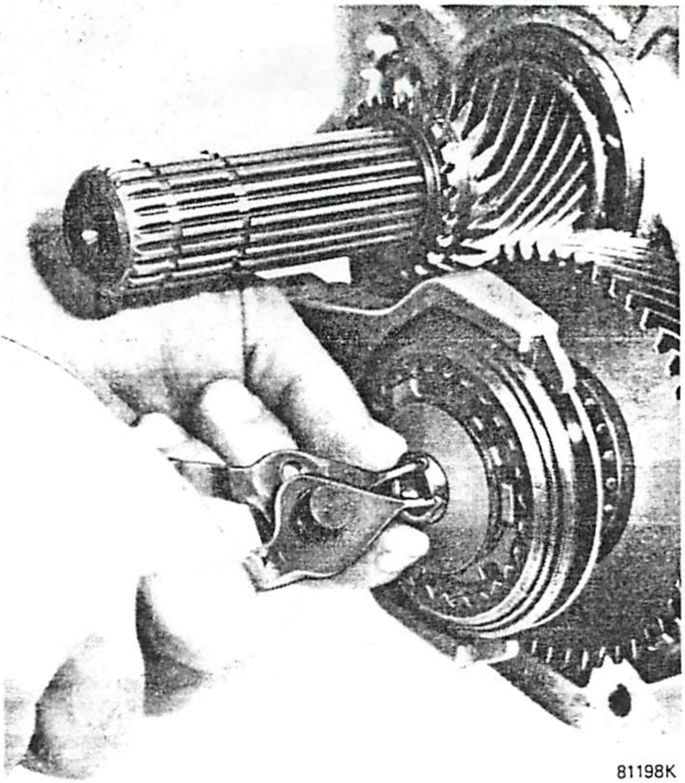

Fig. 2B-43 Fifth Gear Synchronizer Snap Ring Removal/Installation

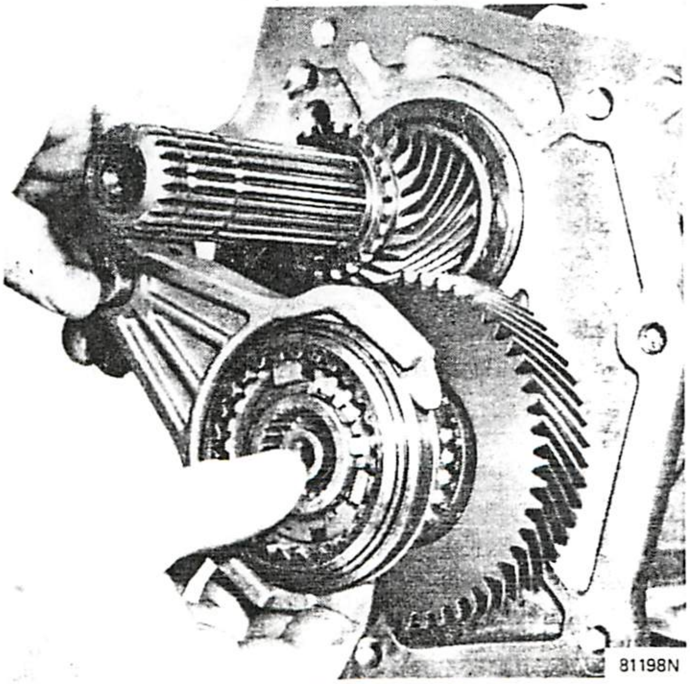

Fig. 2B-44 Fifth Gear, Shift Fork and Synchronizer Sleeve Removal/Installation

(11) For assembly reference, mark position of front bearing cap on front of transmission case. Use hammer and punch to mark both bearing cap and case.

(12) Remove front bearing cap bolts and remove front bearing cap.

(13) Remove front bearing race and end play shim(s) from front bearing cap (fig. 2B-12). Remove oil seal from bearing cap using screwdriver.

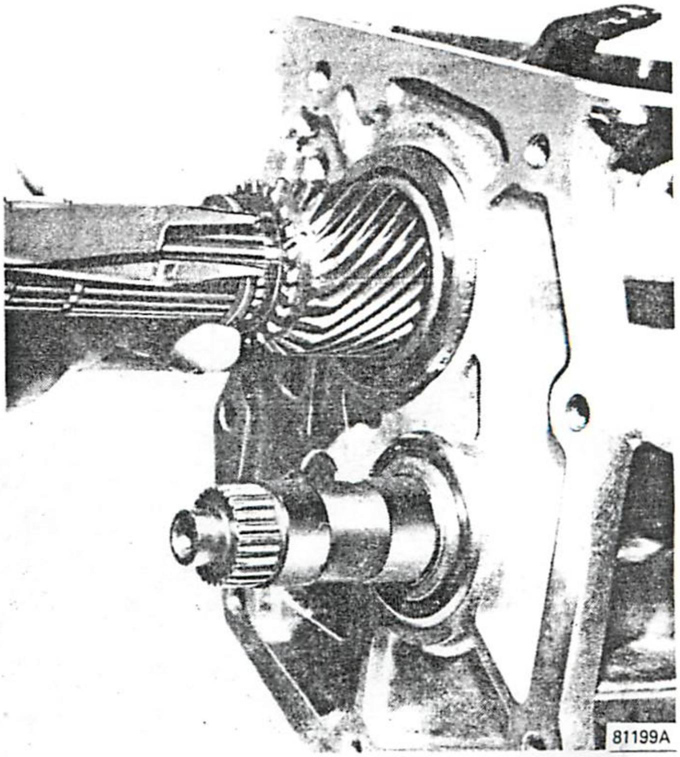

Fig. 2B-45 Fifth Speed Driven Gear Snap Ring Removal/Installation

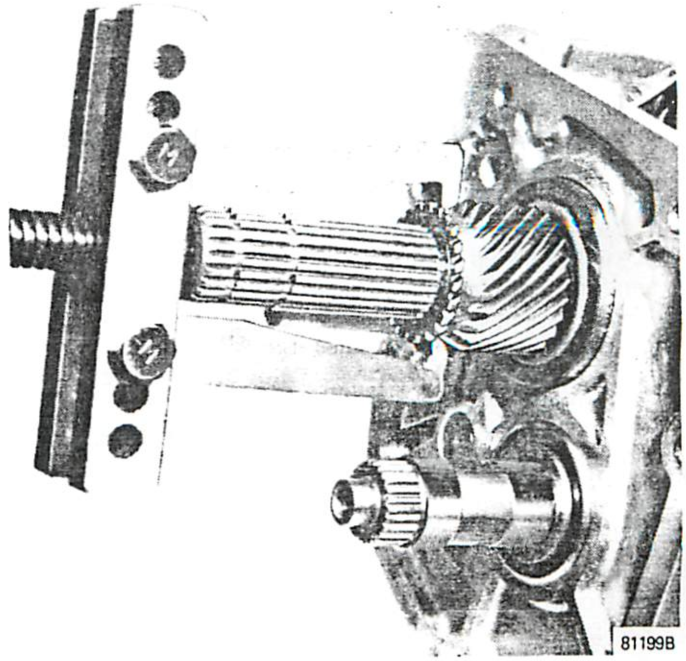

Fig. 2B-46 Fifth Speed Driven Gear Removal

(14) Rotate clutch shaft until flat surface on main drive gear faces countershaft and remove clutch shaft from transmission case (fig. 2B-14). Remove 15 clutch shaft needle bearings, thrust bearing and race.

(15) Remove output shaft rear bearing race and tilt output shaft assembly upward and remove assembly from transmission case (figs. 2B-15 and 2B-16).

(16) Unhook overcenter link spring from rear of transmission case (fig. 2B-47).

NOTE: *Using mechanic's wire or welding rod, fabricate spring remover tool similar to that shown in figure 2B-47.*

(17) Remove C-clip attaching reverse lever and fork assembly-to-reverse lever pivot pin (fig. 2B-10).

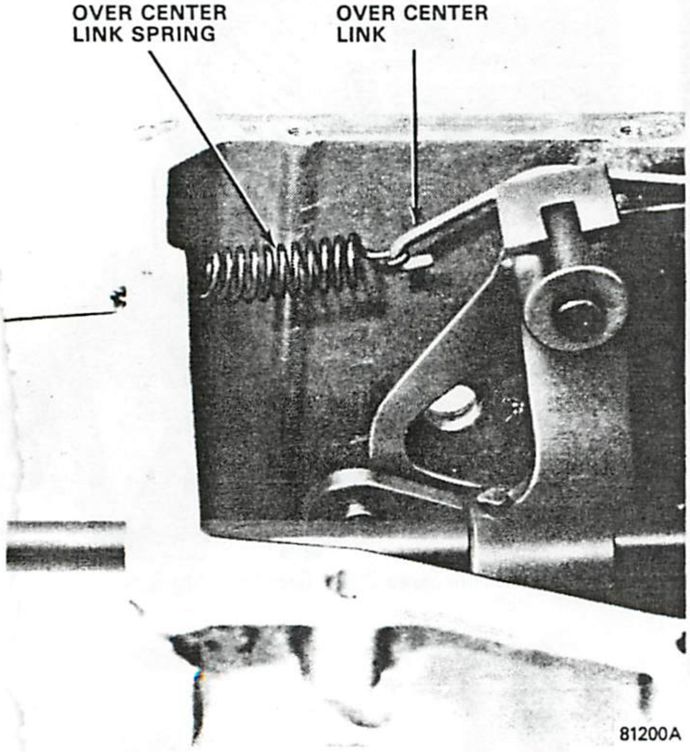

Fig. 2B-47 Reverse Lever Overcenter Link Spring Removal/Installation

(18) Rotate fifth gear-reverse shift rail clockwise (when viewed from top of transmission case) to disengage rail from reverse lever assembly. Remove rail from rear of transmission case (fig. 2B-48).

(19) Remove reverse lever and fork assembly pivot pin, detach reverse lever from reverse idler gear and remove reverse lever and fork assembly from transmission case (fig. 2B-49).

(20) Remove rear countershaft snap ring and spacer (fig. 2B-50).

(21) Insert brass drift through clutch shaft opening in front of transmission case and, using arbor press, carefully press countershaft assembly rearward to remove rear countershaft bearing (fig. 2B-17).

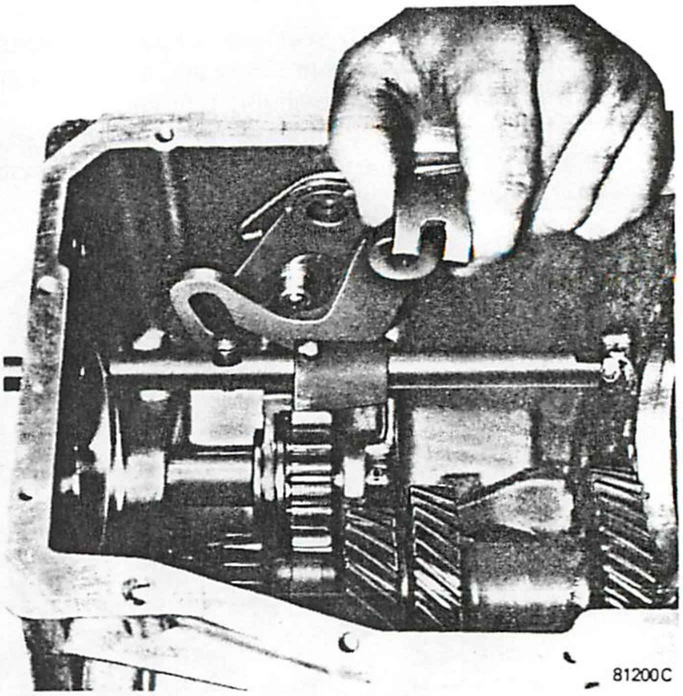

Fig. 2B-48 Reverse Rail Removal/Installation

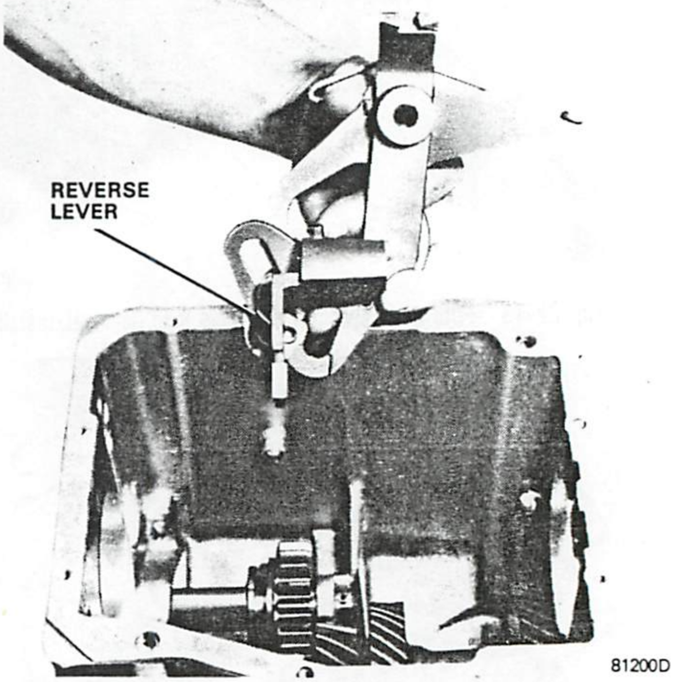

Fig. 2B-49 Reverse Lever Assembly

NOTE: *For assembly reference, bearing identification numbers face outward when bearing is correctly installed.*

(22) Move countershaft assembly rearward inside transmission case, tilt assembly upward and remove from case. Note position of front countershaft thrust washer in case for assembly reference and remove front thrust washer.

(23) Remove countershaft rear bearing spacer (fig. 2B-18).

- Bent or broken inserts.
- Weak or broken insert springs.
- Damaged roller thrust or needle bearings, or bearing bores in countershaft gear or clutch shaft.
- Worn or galled countershaft and hub, clutch shaft or reverse idler gear shaft.
- Worn thrust washers.
- Nicked, broken or worn output or clutch shaft splines.
- Bent, distorted, or weak snap rings.
- Worn bushing in reverse idler gear.
- Rough, galled, or broken front or rear bearing.
- Worn shift fork inserts.
- Broken, cracked, or worn shift forks.
- Bent, worn, or galled shift rail.
- Worn, bent, or broken selector arms, plates, or interlock.
- Worn, bent, broken or stripped offset lever or worn lever insert.

TRANSMISSION ASSEMBLY

Assembly—Transmission Cover

(1) Install nylon inserts and selector arm plates in shift forks (fig. 2B-28).

(2) Install shift rail plug. Coat edges of plug with sealer before installing.

(3) Coat shift rail and shift rail bores with petroleum jelly and insert shift rail in cover. Install rail until end of rail is flush with inside edge of cover.

(4) Position first-second shift fork in cover with fork offset facing rear of cover and push shift rail through fork.

NOTE: *The first-second shift fork is the larger of the two forks.*

(5) Position selector arm and C-shaped interlock plate in cover and insert shift rail through arm. Widest part of interlock plate must face away from cover, and selector arm roll pin hole must face downward and toward rear of cover.

(6) Position third-fourth shift fork in cover with fork offset facing rear of cover. Third-fourth shift fork selector arm plate must be positioned under first-second shift fork selector arm plate.

(7) Insert shift rail through third-fourth shift fork and into front shift rail bore in cover.

(8) Rotate shift rail until selector arm plate at forward end of rail faces away from, but is parallel to cover.

(9) Align roll pin holes in selector arm and shift rail and install roll pin. Be sure roll pin is installed flush with surface of selector arm to prevent pin from contacting selector arm plates during shifts.

(10) Install O-ring in groove of shift rail oil seal.

(11) Install shift rail oil seal as follows:

(a) Install Oil Seal Protector Tool J-26628-2 over threaded end of shift rail (fig. 2B-29, View A).

(b) Lubricate lip of oil seal with petroleum jelly and slide seal over protector and onto shift rail.

(c) Seat oil seal in transmission cover using Oil Seal Installer Tool J-26628-1 (fig. 2B-29, View B).

Assembly—Output Shaft Geartrain

NOTE: *If any output shaft gear is replaced, the countershaft gear must also be replaced to maintain proper gear mesh and avoid noisy operation.*

(1) Coat output shaft and gear bores with transmission lubricant.

(2) Install and align first-second synchronizer sleeve on output shaft hub using reference marks made at disassembly.

(3) Install three first-second synchronizer inserts and two insert springs in first-reverse synchronizer sleeve. Engage tang end of each insert spring in same synchronizer insert but position open ends of springs to face 180 degrees from one another (fig. 2B-30). Be sure sleeve and hub are aligned using assembly reference marks.

(4) Install blocking ring and second gear on mainshaft.

(5) Install tabbed thrust washer and second gear retaining snap ring on mainshaft (fig. 2B-22 and 23). Be sure washer tab is properly seated in mainshaft notch.

(6) Install blocking ring and first gear on output shaft.

(7) Install first gear roll pin in output shaft (fig. 2B-31).

(8) Install first gear thrust washer.

(9) Install rear bearing on output shaft using Tool J-2995 and press (fig. 2B-32).

(10) Install third gear, third and fourth gear synchronizer hub inserts and sleeve on shaft. Hub offset must face forward.

(11) Install thrust bearing washer on forward end of output shaft.

Assembly—Transmission Case

CAUTION: *Except for the gearshift lever attaching bolts and fill plug, all threaded holes and bolts used in the Model T5 Transmission are metric sizes. Do not attempt to substitute a different thread-type bolt if the original ones are lost.*

(1) Coat countershaft front bearing outer cage with Loctite 601, or equivalent, and install countershaft front bearing flush with case using arbor press (fig. 2B-33).

(2) Coat countershaft tabbed thrust washer with petroleum jelly and install washer so tab engages corresponding depression in case.

(34) Select shim pack measuring .001 to .005 inch (0.03 to 0.13 mm) **thicker** than the end play measured in Step 33.

(35) Place transmission horizontally on workbench and remove front bearing cap and front bearing race.

(36) Add shims to bearing cap to obtain necessary preload and install clutch shaft bearing race in cap.

(37) Apply bead of RTV sealant, or equivalent, on case mating surface of front bearing cap. Install front bearing cap using reference marks made during disassembly and tighten retaining bolts to 15 foot-pounds (20 N•m) torque.

(38) Recheck end play. There must be no end play.

(39) Remove dial indicator from adpater housing.

(40) Remove extension/adapter housing and install adapter housing rear seal using Tool J-29184 (fig. 2B-37).

(41) Move shift forks on transmission cover and synchronizer rings inside transmission to the neutral position.

(42) Apply bead of RTV sealant, or equivalent, to cover mating surface of transmission.

(43) Lower cover assembly, at slightly off center attitude, onto case while aligning shift forks and synchronizer sleeves. Center cover on case to engage reverse relay lever and install two dowel bolts in cover. Install remaining bolts and tighten all cover bolts to 9 foot-pounds (12 N•m) torque.

NOTE: *The offset lever-to-shift rail roll pin hole is in a vertical position when Steps 40 and 42 are performed correctly.*

(44) Apply bead of RTV sealant, or equivalent, to extension/adapter housing-to-transmission case mating surface.

(45) Install extension/adapter *housing* over output shaft and shift rail to a position where shift rail just enters shift cover opening.

(46) Install detent spring into offset lever. Place steel ball in neutral guide plate detent (fig. 2B-7). Apply pressure on steel ball with detent spring and offset lever and slide offset lever on shift rail and seat extension/adapter housing against transmission case.

NOTE: *The offset lever and shift rail roll pin holes should be aligned and in a vertical position following completion of Step 45.*

(47) Install and tighten adapter housing retaining bolts to 25 foot-pounds (34 N•m) torque.

(48) Install roll pin in offset lever and shift rail (fig. 2B-5).

(49) Install damper sleeve in offset lever.

(50) Coat backup lamp switch threads with RTV sealant, or equivalent, and install switch in case.

SPECIFICATIONS

Transmission Specifications Model T5

Lubrication	
Level	to bottom of fill hole
Inspect Correct Fill Levels	5,000 mi/5 mo/8 000 km initially, then every 7,500 mi/7½ mo/12 000 km thereafter
Recommended Lubricants	AMC/Jeep Automatic Transmission Fluid or equivalent labeled Dexron II®
Lubricant Capacity	
U.S. Measure	4.0 pints
Imperial Measure	3.7 pints
Metric Measure	1.9 liters

60790

Torque Specifications Model T5

Service *Set-To* Torques should be used when assembling components. Service In-Use Recheck Torques should be used for checking a pre-tightened item.

	USA (ft-lbs)		Metric (N·m)	
	Service Set-To Torque	Service In-Use Recheck Torque	Service Set-To Torque	Service In-Use Recheck Torque
Backup Lamp Switch	15	12-18	20	16-24
Adapter Housing Bolt	13	11-15	18	15-20
Fill Plug	20	15-25	27	20-34
Front Bearing Cap Bolt	13	11-15	18	15-20
Reverse Lever Pivot Bolt	20	15-25	27	20-34
Shift Control Housing Bolt	10	7-12	14	9-16
Transmission Cover Bolt	7	5-9	10	7-12
Transmission-to-Clutch Housing Bolt	55	45-65	75	61-65
Universal Joint Clamp Strap Bolt	14	12-18	19	16-24

All Torque values given in foot-pounds and newton meters with dry fits unless otherwise specified.

60791

MODEL T-176
4-SPEED TRANSMISSION

DISASSEMBLY

(1) Remove bolts attaching transfer case to transmission and remove transfer case.

(2) Remove shift control housing.

NOTE: *Two of the housing attaching bolts are dowel-type alignment bolts. Note the location of these bolts for assembly reference.*

(3) Drain lubricant from transmission case if not drained during removal.

(4) Remove countershaft using Arbor Tool J-29342 (fig. 2B-52). Tap countershaft out rear of case.

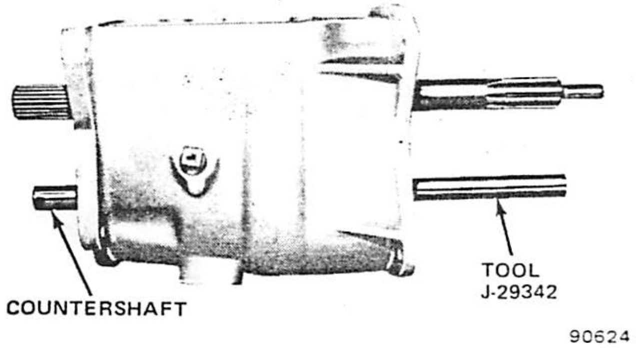

Fig. 2B-52 Countershaft Removal/Installation

(5) Remove locating ring and retaining snap ring from rear bearing.

(6) Remove rear bearing using Puller Set J-25152 (fig. 2B-53).

(7) Scribe or punch alignment reference marks in front bearing cap and transmission case.

(8) Remove front bearing cap and gasket.

(9) Remove and discard front bearing cap oil seal. Use screwdriver to pry seal out of cap.

(10) Remove locating ring and retaining snap ring from front bearing (fig. 2B-54).

(11) Remove clutch shaft and front bearing using Adapter J-29344 and Puller Set J-25152 (fig. 2B-55).

(12) Remove third-fourth blocking ring from clutch shaft or synchronizer hub.

(13) Remove front bearing from clutch shaft using Puller Set J-25152 (fig. 2B-56).

(14) Remove mainshaft pilot bearing rollers from clutch shaft (fig. 2B-54).

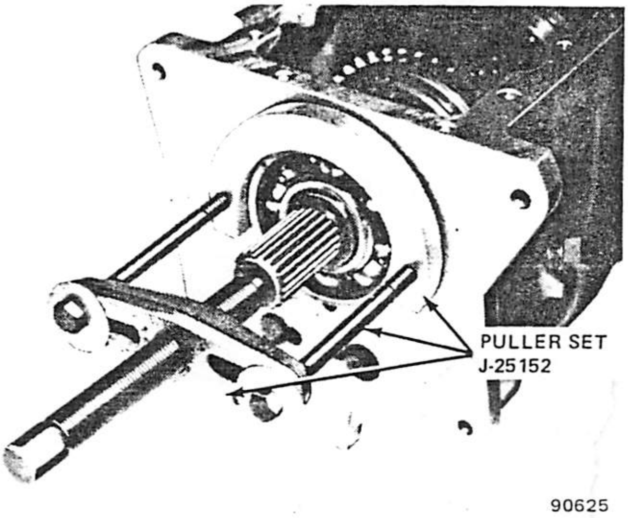

Fig. 2B-53 Rear Bearing Removal

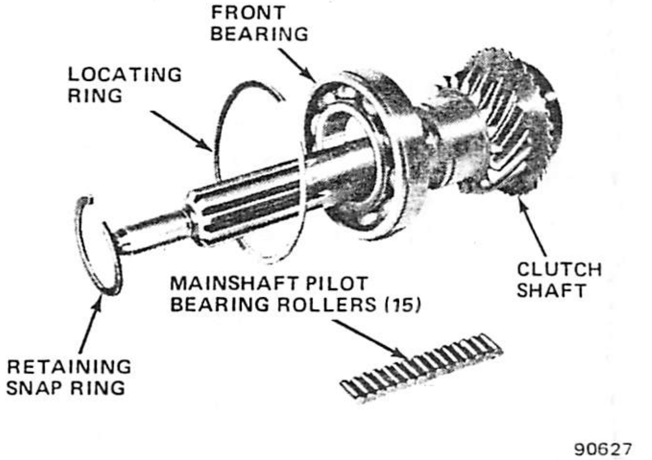

Fig. 2B-54 Clutch Shaft and Front Bearing Assembly

(15) Remove mainshaft and geartrain assembly. Move third-fourth synchronizer sleeve rearward (to third gear position). Tilt rear end of shaft downward and lift front end of shaft upward and out of case.

(16) Remove countershaft gear and arbor tool as assembly.

(17) Remove countershaft gear thrust washers and any mainshaft pilot bearing rollers that may have fallen into case during clutch shaft removal.

(18) Remove reverse idler gear assembly. Tap idler gear shaft out rear of case (fig. 2B-57). Remove gear assembly thrust washers.

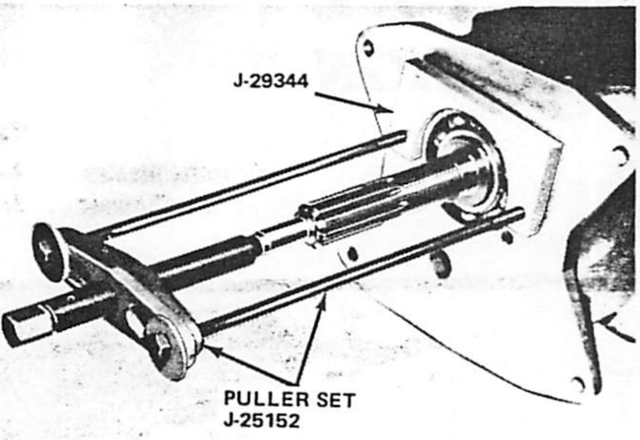

90626

Fig. 2B-55 Clutch Shaft Front Bearing Removal

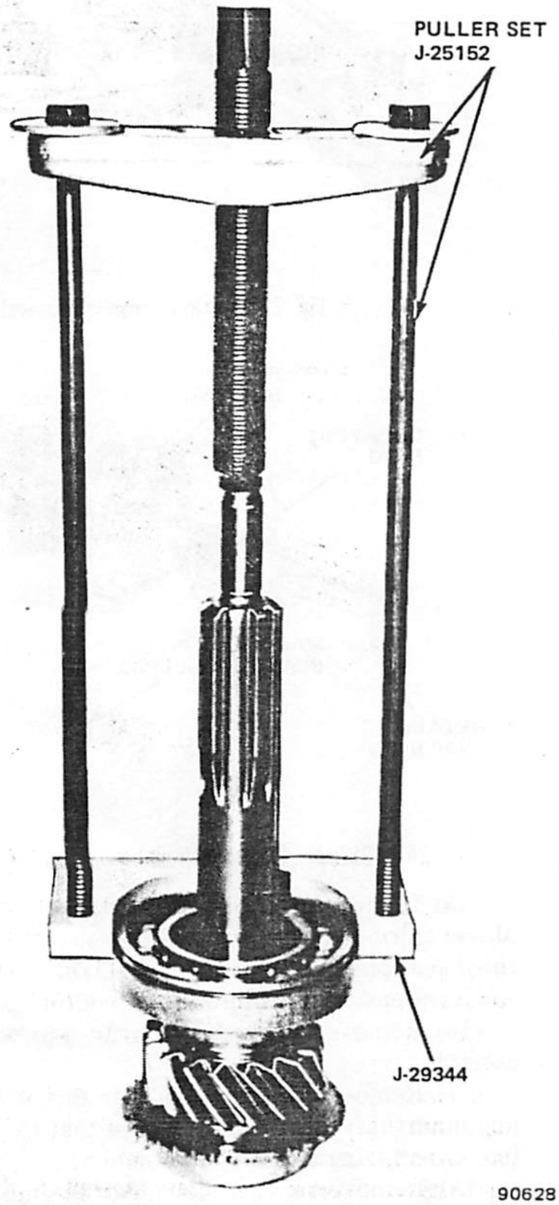

90628

Fig. 2B-56 Removing Front Bearing from Clutch Shaft

(19) Remove needle bearings and bearing retainers from gear assembly (fig. 2B-58). Remove sliding gear from idler gear. Note position of sliding gear for assembly reference.

(20) Remove arbor tool from countershaft gear and remove needle bearings and bearing retainers (fig. 2B-59).

Disassembly Mainshaft Geartrain

(1) Remove third-fourth synchronizer snap ring from front end of mainshaft (fig. 2B-60).

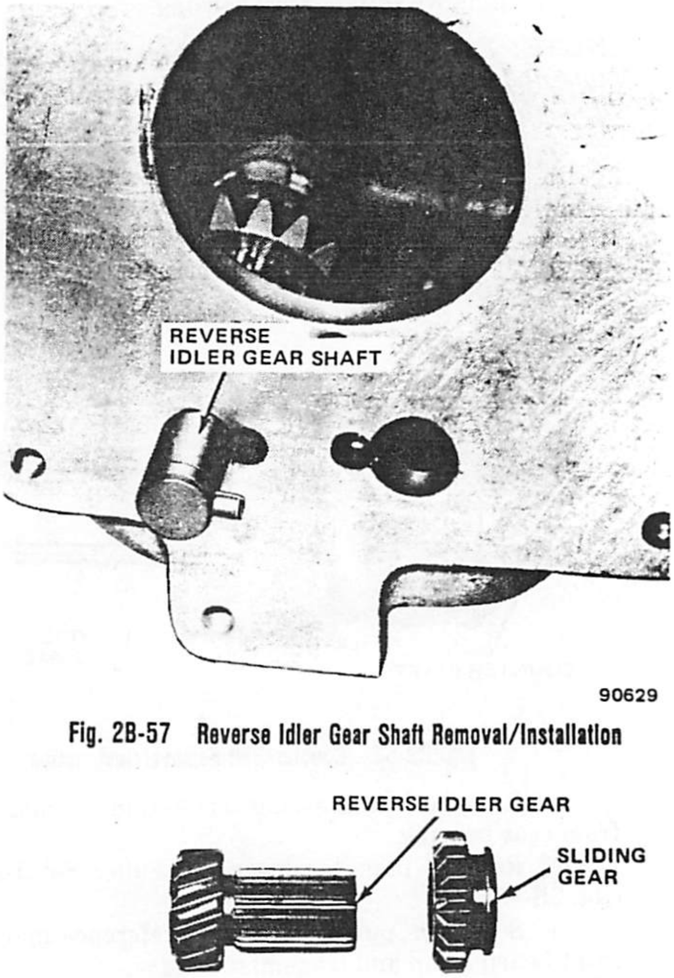

90629

Fig. 2B-57 Reverse Idler Gear Shaft Removal/Installation

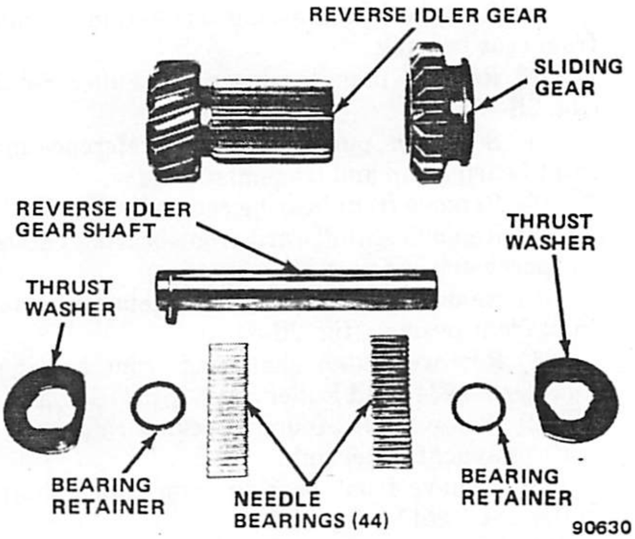

90630

Fig. 2B-58 Reverse Idler Gear Assembly

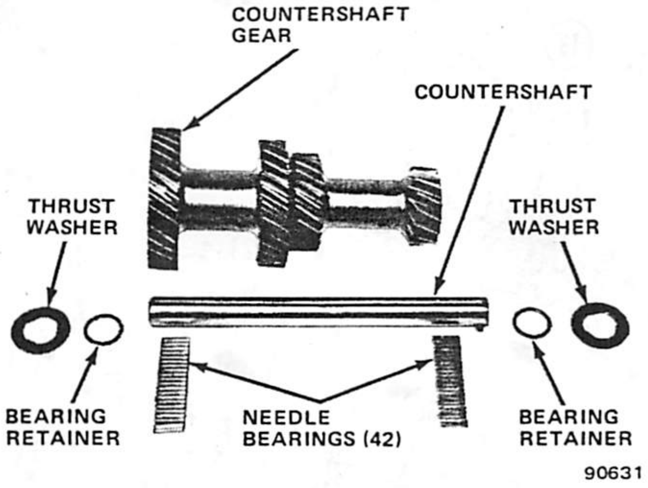

Fig. 2B-59 Countershaft Gear Assembly

(2) Remove third-fourth synchronizer assembly from mainshaft. Slide hub out of sleeve. Remove insert springs and three inserts and blocking ring. Note position of insert springs for assembly reference.

(3) Remove third gear from mainshaft.

(4) Remove second gear snap ring from mainshaft and remove second gear and blocking ring.

(5) Remove tabbed thrust washer from mainshaft (fig. 2B-60).

(6) Remove snap ring from first-second synchronizer hub. Remove hub and reverse gear and sleeve as assembly. Mark hub and sleeve for assembly reference. Remove insert springs from hub, remove three inserts, and remove sleeve and gear from hub.

(7) Remove first gear thrust washer from rear of shaft and remove first gear and blocking ring (if ring was not removed previously).

CLEANING AND INSPECTION

Cleaning

Thoroughly wash all parts in solvent and dry using compressed air. However, do not dry the bearings with compressed air. Air dry the bearings or wipe them dry using a clean shop cloth only.

Clean the needle and clutch shaft roller bearings by wrapping the bearings in a clean cloth and submerging them in solvent. Or, place the bearings in a shallow parts cleaning tray and cover them with solvent. Allow the bearings to air dry on a clean cloth.

Inspection

Inspect the transmission components. Replace any components that exhibit the following conditions:

Case

- Cracks in bores, sides, bosses or at bolt holes.
- Stripped threads in bolt holes.
- Nicks, burrs, rough surfaces in shaft bores or on gasket surfaces.

Gear, Shaft and Synchronizer Assemblies

- Broken, chipped or worn gear teeth.
- Damaged splines on mainshaft, synchronizer hubs, or sleeves.
- Broken or worn teeth or excessive wear or damage of blocking rings.
- Bent or broken synchronizer inserts.
- Damaged needle bearings or bearing bores in reverse idler or countershaft gear.
- Wear or galling of mainshaft, countershaft, clutch shaft or idler gear shafts.
- Worn thrust washers.
- Nicked, broken, or worn mainshaft or clutch shaft splines.
- Bent, distorted, broken or weak snap rings.
- Rough, galled, worn, or broken front or rear bearing.

ASSEMBLY

(1) Lubricate reverse idler gear shaft bore and sliding gear with transmission lubricant. Install sliding gear on reverse idler gear (fig. 2B-58).

(2) Install Arbor Tool J-29343 in reverse idler gear and install 22 needle bearings and one bearing retainer at each end of gear (fig. 2B-61).

(3) Coat reverse idler gear thrust washer surfaces with petroleum jelly and install thrust washers in case.

NOTE: *The thrust washers have flats on them. Be sure to install the washers so these flats will face the mainshaft. Also, be sure to engage the thrust washer locating tabs in the case locating slots.*

(4) Install reverse idler gear assembly (fig. 2B-62). Align gear bore, thrust washers, case bores, and install reverse idler gear shaft from rear of case. Be sure to seat roll pin in shaft, align roll pin with counterbore in case and push shaft into rear of case (fig. 2B-57).

(5) Measure reverse idler gear end play by inserting feeler gauge between thrust washer and gear. End play should be 0.004 to 0.018 inch (0.10 to 0.45 mm). If end play exceeds 0.018 inch (0.45 mm), remove idler gear and replace thrust washers.

(6) Coat counter shaft gear bore, needle bearings and bearing bores in gear with petroleum jelly. Insert arbor tool in bore of gear and install 21 needle bearings and one retainer in each end of gear.

(7) Coat countershaft gear thrust washer surfaces with petroleum jelly and position thrust washers in case.

NOTE: *Be sure to engage the locating tabs on the thrust washers in the locating slóts in the case.*

(8) Insert countershaft into rear case bore just far enough to hold rear thrust washer in position. This will

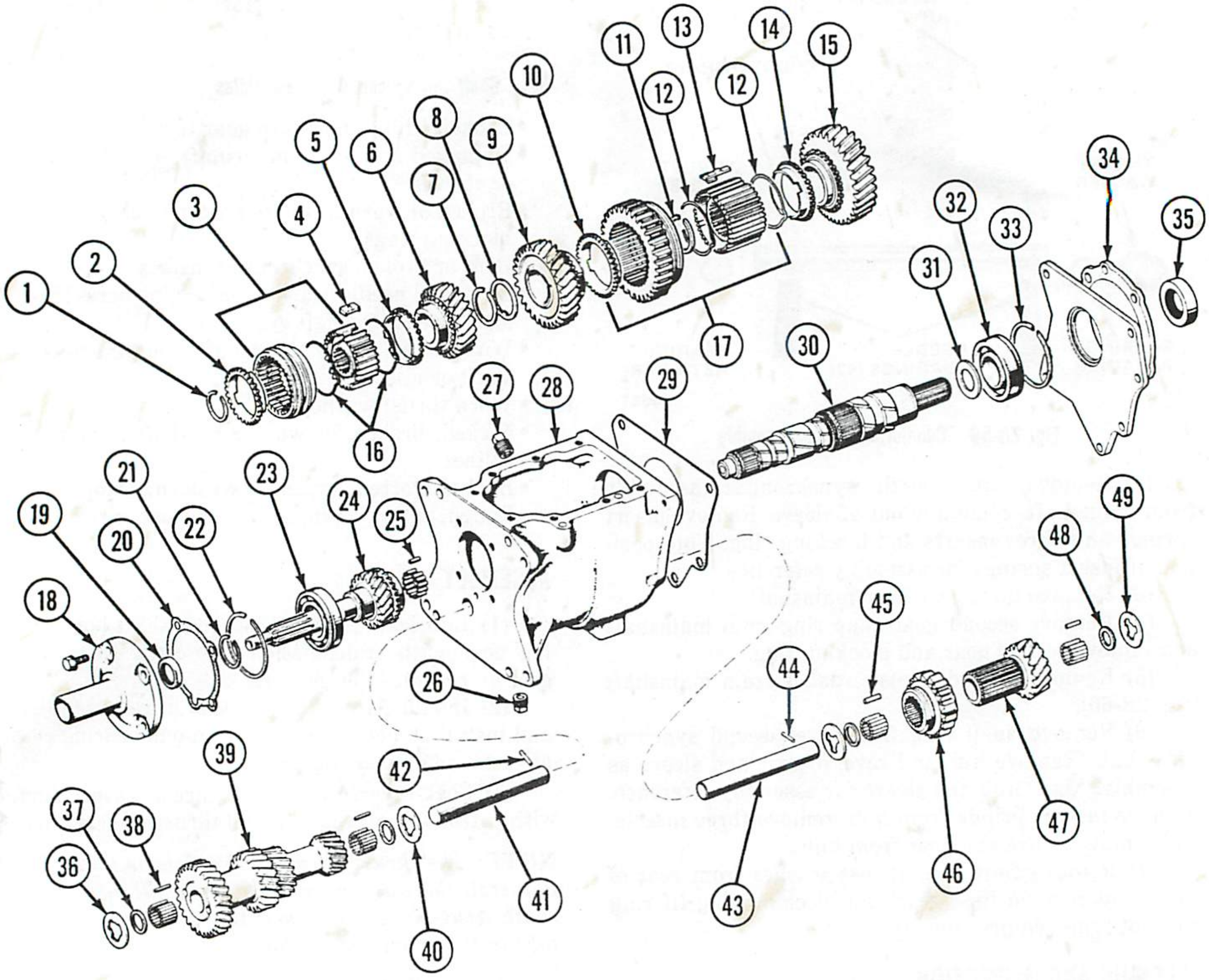

1. THIRD-FOURTH GEAR SNAP RING
2. FOURTH GEAR SYNCHRONIZER RING
3. THIRD-FOURTH GEAR CLUTCH ASSEMBLY
4. THIRD-FOURTH GEAR PLATE
5. THIRD GEAR SYNCHRONIZER RING
6. THIRD SPEED GEAR
7. SECOND GEAR SNAP RING
8. SECOND GEAR THRUST WASHER
9. SECOND SPEED GEAR
10. SECOND GEAR SYNCHRONIZER RING
11. MAIN SHAFT SNAP RING
12. FIRST-SECOND SYNCHRONIZER SPRING
13. LOW-SECOND PLATE
14. FIRST GEAR SYNCHRONIZER RING
15. FIRST GEAR
16. THIRD-FOURTH SYNCHRONIZER SPRING
17. FIRST-SECOND GEAR CLUTCH ASSEMBLY
18. FRONT BEARING CAP
19. OIL SEAL
20. GASKET
21. SNAP RING
22. LOCK RING
23. FRONT BALL BEARING
24. CLUTCH SHAFT
25. ROLLER BEARING
26. DRAIN PLUG
27. FILL PLUG
28. CASE
29. GASKET
30. SPLINE SHAFT
31. FIRST GEAR THRUST WASHER
32. REAR BALL BEARING
33. SNAP RING
34. ADAPTER PLATE
35. ADAPTER SEAL
36. FRONT COUNTERSHAFT GEAR THRUST WASHER
37. ROLLER WASHER
38. REAR ROLLER BEARING
39. COUNTERSHAFT GEAR
40. REAR COUNTERSHAFT THRUST WASHER
41. COUNTERSHAFT
42. PIN
43. IDLER GEAR SHAFT
44. PIN
45. IDLER GEAR ROLLER BEARING
46. REVERSE IDLER SLIDING GEAR
47. REVERSE IDLER GEAR
48. IDLER GEAR WASHER
49. IDLER GEAR THRUST WASHER

Fig. 2B-60 Model T-176 Four-Speed Transmission

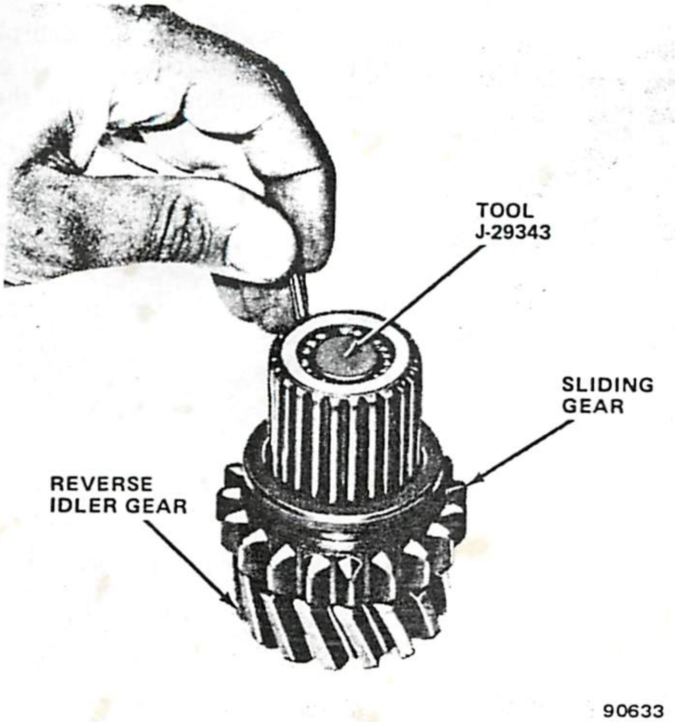

Fig. 2B-61 Reverse Idler Gear Needle Bearing Installation

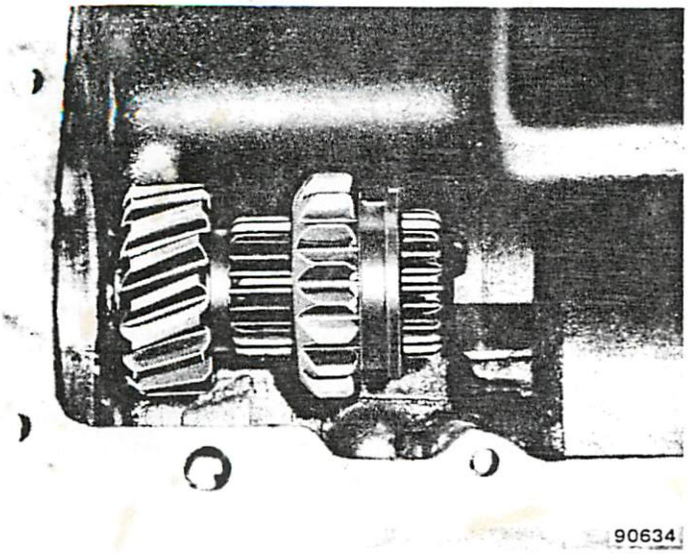

Fig. 2B-62 Reverse Idler Gear Installation

prevent washer from being displaced when countershaft gear is installed.

(9) Install countershaft gear. Align gear bore, thrust washers, bores in case, and install countershaft part-way into case. Be sure arbor tool enters shaft bore at front of case.

NOTE: *Do not remove the countershaft arbor tool completely.*

(10) Measure countershaft gear end play by inserting feeler gauge between washer and gear. End play should be 0.004 to 0.018 inch (0.10 to 0.45 mm). If end play exceeds 0.018 inch (0.45 mm), remove gear and replace thrust washers. After correct end play has been tained, reinstall arbor tool in countershaft gear allow gear to remain at bottom of case. Leave coun shaft in rear case bore to hold rear thrust washe place.

NOTE: *The countershaft gear must remain at the tom of the case to provide sufficient clearance for ins lation of the mainshaft and clutch shaft assemblies.*

(11) Lubricate mainshaft, synchronizer assemb and gear bores with transmission lubricant.

(12) Assemble first-second synchronizer hub and verse gear and sleeve (fig. 2B-60):

(a) Install gear and sleeve on hub and p assembly flat on workbench.

(b) Drop inserts into hub slots.

(c) Install insert spring. Position loop-end spring in one insert, compress spring ends and ins spring ends under lips of remaining two inserts. Be s spring is under lip of each insert (fig. 2B-63).

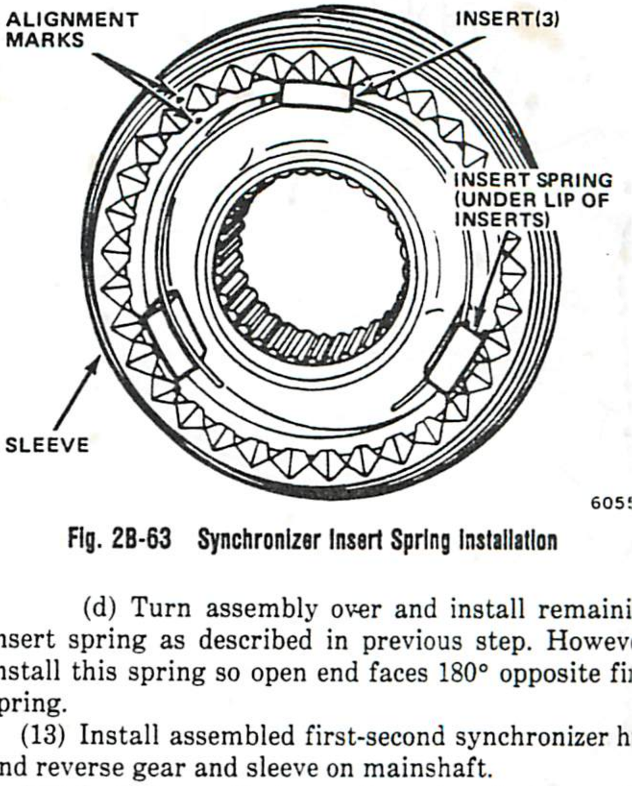

Fig. 2B-63 Synchronizer Insert Spring Installation

(d) Turn assembly over and install remaini insert spring as described in previous step. Howev install this spring so open end faces 180° opposite fi spring.

(13) Install assembled first-second synchronizer h and reverse gear and sleeve on mainshaft.

(14) Install new first-second synchronizer snap ri on mainshaft (fig. 2B-60).

(15) Install first gear and blocking ring on rear mainshaft and install first gear thrust washer (fig. 2 64).

(16) Install new tabbed thrust washer on mainsha Be sure washer tab is seated in mainshaft tab bore (f 2B-65).

(17) Install second gear and blocking ring on mai shaft and install new second gear snap ring.

(18) Install third gear and blocking ring mainshaft.

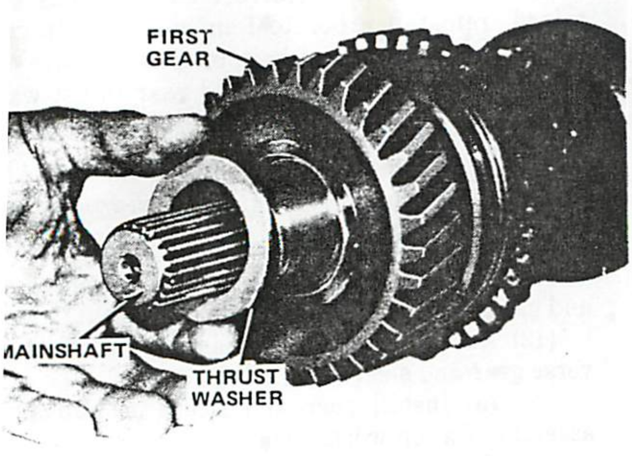

Fig. 2B-64 First Gear and Thrust Washer Installation

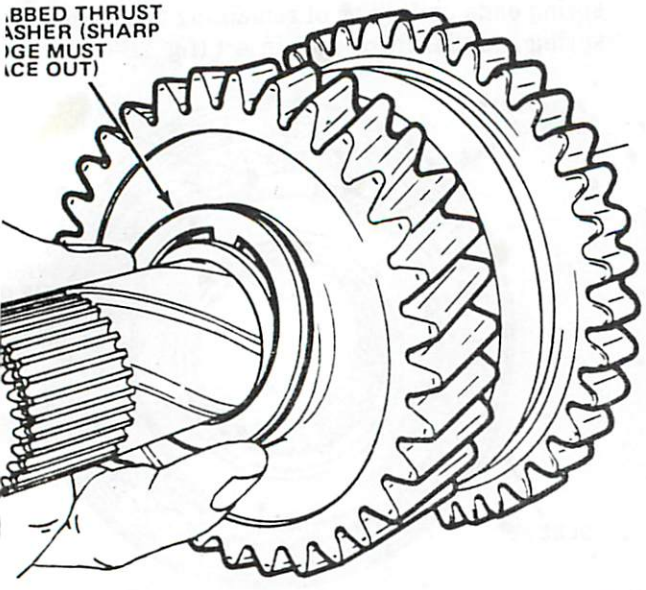

Fig. 2B-65 Tabbed Thrust Washer Installation

19) Assemble third-fourth synchronizer (fig. 2B-60).

(a) Install sleeve on synchronizer hub. Align ts using reference marks.

(b) Place assembled hub and sleeve flat on kbench.

(c) Drop inserts into hub slots.

(d) Install insert spring. Position loop-end of ng in one insert, compress spring ends and insert ng ends under lips of remaining two inserts (fig. 2B-

(e) Turn assembly over and install remaining ert spring as described in previous step. However, ition this spring so open end faces 180° opposite first ing.

20) Install assembled third-fourth synchronizer as- bly on mainshaft.

21) Install new third-fourth synchronizer retaining ring on mainshaft and measure end play between synchronizer hub and snap ring (fig. 2B-66). End play should be 0.004 to 0.014 inches (0.10 to 0.35 mm). If end play exceeds limits, replace mainshaft thrust washers and snap rings.

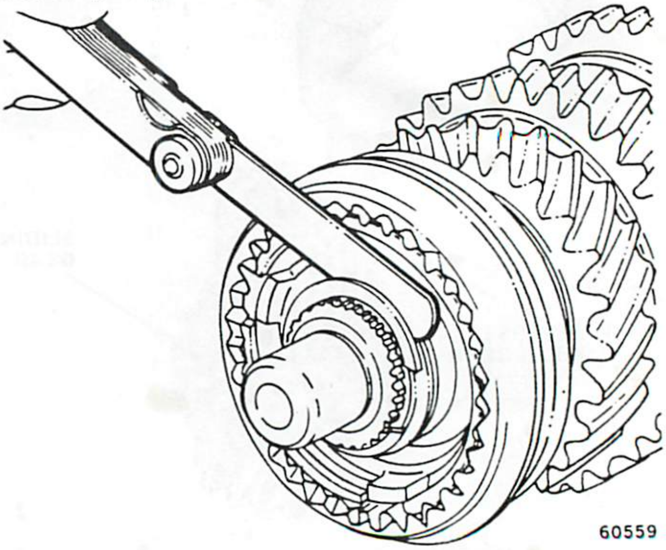

Fig. 2B-66 Checking Mainshaft Geartrain End Play

(22) Install mainshaft geartrain assembly in case. Be sure synchronizers are in neutral position so sleeves will clear top of case when assembly is installed.

(23) Install locating snap ring on front bearing and install front bearing part-way onto clutch shaft.

NOTE: *Do not install the bearing completely at this time as the shaft will not clear the countershaft gear and prevent installation.*

(24) Coat bearing bore in clutch shaft and mainshaft pilot roller bearings with petroleum jelly. Install 15 roller bearings in clutch shaft bearing bore.

CAUTION: *Do not use chassis grease or a similar "heavy" grease in the clutch shaft bore. Use petroleum jelly only. Heavy grease will plug the lubrication holes in the shaft and prevent proper lubrication of the roller bearing.*

(25) Coat blocking ring surface of clutch shaft with transmission lubricant and position blocking ring on shaft.

(26) Support mainshaft assembly and insert clutch shaft through front bearing bore in case. Seat mainshaft pilot hub in clutch shaft roller bearings and tap front bearing and clutch shaft into case using rawhide mallet.

(27) Install front bearing cap and tighten cap bolts finger-tight only.

(28) Position rear bearing on mainshaft. Do not install bearing locating ring at this time. Start bearing into shaft and into case bore using Tool J-29345. Remove tool and complete bearing installation using rawhide mallet. When bearing is fully seated on shaft, install bearing retaining snap ring.

NOTE: *In order to seat the rear bearing on the mainshaft, the bearing must be tapped into the case deeper than the locating snap ring would allow. For this reason, do not install the locating snap ring until after the bearing is fully seated on the shaft and the retaining snap ring is installed.*

(29) Remove front bearing cap, seat front bearing fully on clutch shaft and install bearing retaining snap ring.

(30) Apply thin film of sealer to front bearing cap gasket and position gasket on case. Be sure gasket notch is aligned with oil return hole in case.

(31) Remove front bearing cap oil seal using screwdriver and install replacement oil seal using Tool J-25233 (fig. 2B-67).

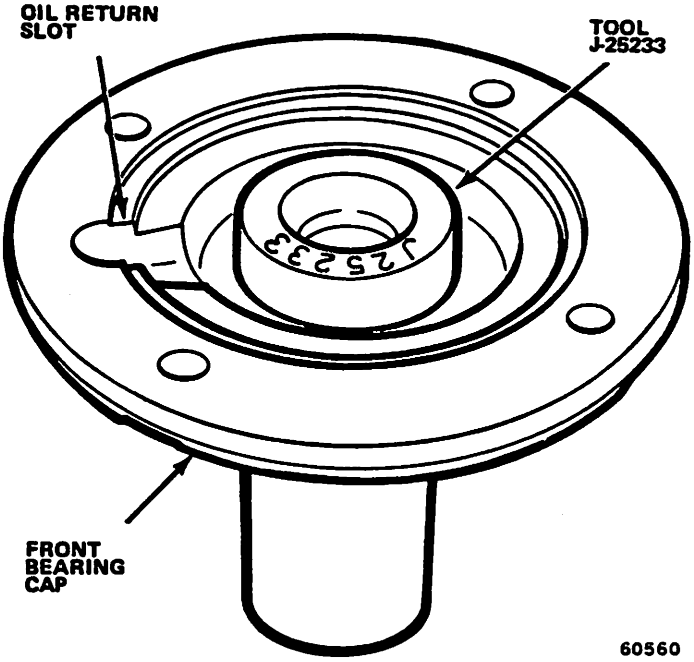

Fig. 2B-67 Front Bearing Cap Seal Installation

(32) Install front bearing cap. Tighten cap bolts to 12 foot-pounds (16 N•m) torque.

(33) Install locating ring on rear bearing. If necessary, reseat bearing in case using rawhide mallet.

(34) Install countershaft as follows:

(a) Turn transmission case on end. Position case at edge of workbench with clutch shaft pointing downward. Be sure countershaft bore in front of case is accessible.

(b) Have helper hold case in position.

(c) Align countershaft gear bores with thrust washers and case bores and tap shaft into place. Do not let arbor tool drop onto floor as shaft is installed.

CAUTION: *Do not damage the thrust washers during countershaft installation. Be sure they are aligned with the case bores and gear bores before tapping the countershaft into place.*

(35) Shift synchronizer sleeves into all gear positions and check operation. If clutch shaft and mainshaft appear to bind in Neutral position, check for blocking rings sticking on tapered portion of gears. Use screwdriver to free any sticking blocking rings.

(36) Fill transmission with 3.5 pints (1.7 liters) of SAE 85W-90 gear lubricant.

(37) Position new shift control housing gasket on case and install control housing. Tighten housing bolts to 12 foot-pounds (16 N•m) torque.

(38) Install transmission on transfer case.

SHIFT CONTROL HOUSING

Disassembly

(1) Remove shift lever cover, control housing cap, retainer and remove shift lever and spring.

(2) Position transmission case cover in vise so shift forks are facing upward. Use wood blocks to protect cover from vise jaws and do not overtighten vise.

(3) Place all shift forks in neutral position.

(4) Remove shift rail support plate attaching bolts and tabbed washers and remove support plates (fig. 2B-68).

(5) Remove first-second shift rail.

(6) Remove third-fourth shift rail, shift lug and interlock pin.

(7) Remove reverse shift rail.

(8) Remove poppet balls.

(9) Remove shifter interlock rings.

(10) Remove poppet springs.

(11) Remove fulcrum pins.

(12) Remove cover from vise.

(13) Clean all components in solvent and dry using compressed air.

(14) Inspect all components. Replace any components that are nicked, cracked, broken or excessively worn.

Assembly

(1) Clamp transmission case cover in vise using protective wood blocks and install fulcrum pins in cover.

CAUTION: *To avoid damaging the cover do not overtighten the vise jaws.*

(2) Lubricate shift rails and shift rail grooves in cover with petroleum jelly.

(3) Install poppet springs in transmission case cover bores.

(4) Install poppet balls (one on each spring).

(5) Position reverse gear shift rail and fork on reverse rocker arm in transmission case cover.

NOTE: *Be sure the notch on the shift rail is positioned over the reverse poppet ball and that reverse rocker arm is engaged in the reverse fork slot.*

(6) Install third-fourth shift rail and shift fork assembly in transmission case cover.

NOTE: *Be sure the interlock pin is in position in the shift rail before further assembly.*

(7) Install first-second shift rail and fork assembly. Be sure shift rail notch is over poppet ball in transmission case cover.

(8) Install shifter interlock rings in cover and between poppet balls.

(9) Press downward on shift rails to compress poppet balls and springs. Use wood block long enough to contact all three shift rails to press rails downward evenly.

(10) While holding shift rails downward, position shift rail retaining plates on housing and install plate attaching bolts and tabbed washers finger-tight.

(11) Remove wood block and tighten shift rail retaining bolts to 12 to 15 foot-pounds (16 to 19 N•m) torque. Be sure tabbed washers are in correct position before bending washer tabs.

(12) Check shift rail operation. Each rail must slide smoothly in cover groove. Be sure it is not possible to overshift into another gear position. After checking shift operation, place forks in third gear position.

(13) Install shift lever, spring, spring retainer and control housing cap (fig. 1). Push cap downward and turn lever retainer clockwise to install and seat.

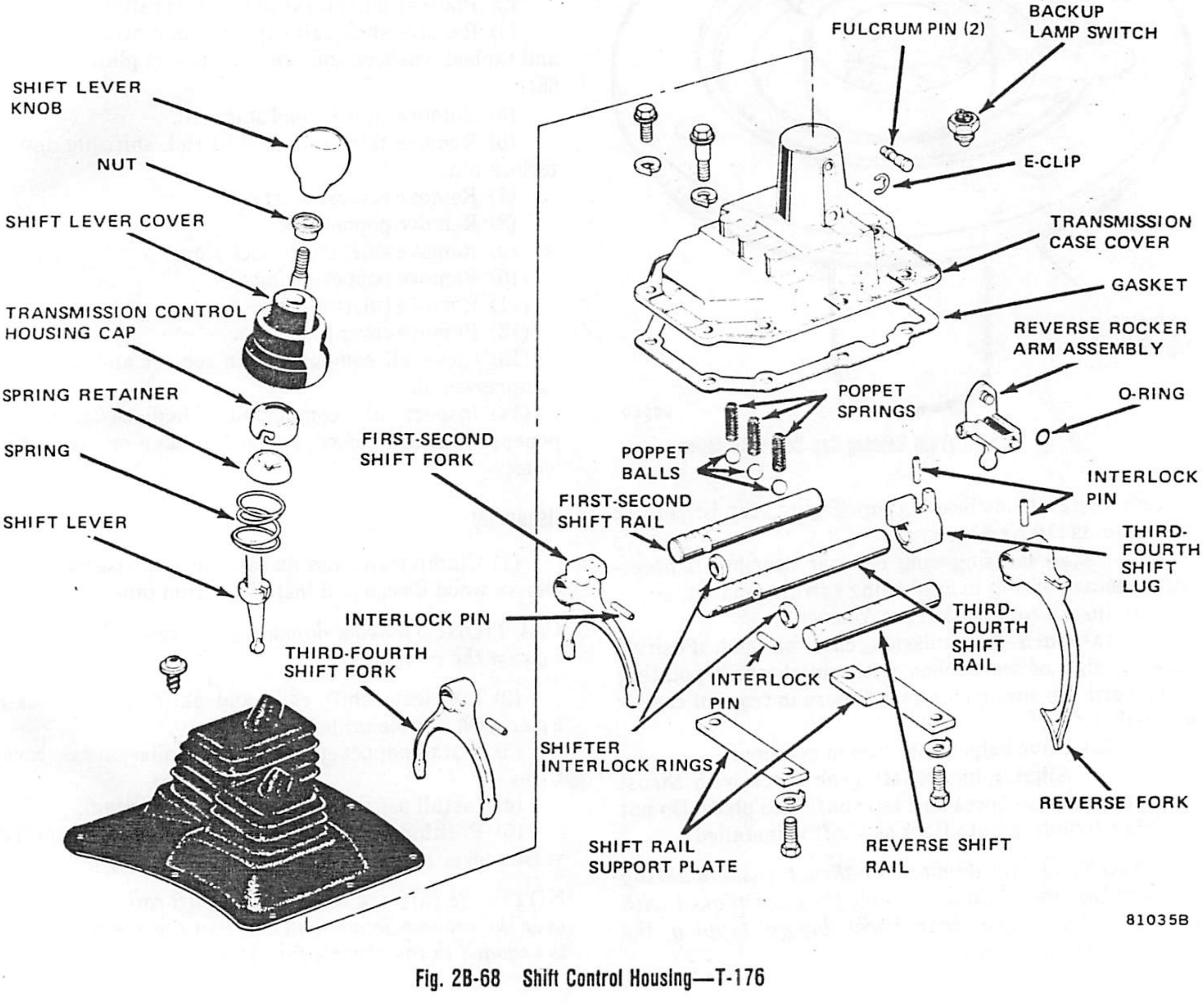

Fig. 2B-68 Shift Control Housing—T-176

SPECIFICATIONS

Lubricant Capacity and End Play Tolerances — Model T-176

End Play Tolerances:	
Countershaft Gear to Case	0.004 to 0.018 inch (0.10 to 0.45 mm)
Reverse Idler Gear to Case	0.004 to 0.018 inch (0.10 to 0.45 mm)
Mainshaft Gear Train	0.004 to 0.018 inch (0.10 to 0.45 mm)
Lubricant Capacity	3.5 pints (1.7 liters)
Lubricant Type	SAE 85W-90, API GL5

90637

Torque Specifications — Model T-176

Service Set-To Torques should be used when assembling components. Service In-Use Recheck Torques should be used for checking a pre-tightened item.

	USA (ft-lbs)		Metric (N·m)	
	Service Set-To Torque	Service In-Use Recheck Torque	Service Set-To Torque	Service In-Use Recheck Torque
Backup Lamp Switch	15	10-20	20	14-27
Drain and Fill Plugs	15	10-20	20	14-27
Front Bearing Cap Bolts	13	11-15	18	15-20
Shift Housing-to-Transmission Case Bolts	13	11-15	18	15-20
Support Plate Bolts	18	15-20	24	20-27

All torque values given in foot-pounds and newton-meters with dry fits unless otherwise specified.

90638

MODEL T-18A 4-SPEED TRANSMISSION

DISASSEMBLY

(1) Remove transmission-to-transfer case adapter stud nuts, and remove transmission from transfer case.

(2) Remove and discard transmission-to-transfer case gasket (fig. 2B-69).

(3) Position shift lever in reverse, remove case cover bolts, remove shift control housing.

(4) Punch alignment marks on the front bearing cap, remove capscrews and bearing cap.

(5) Remove front bearing lock ring and snap ring.

(6) Remove front bearing from clutch shaft using Puller J-25152 (fig. 2B-70).

(7) Remove front bearing retainer washer from clutch shaft.

(8) Remove rear adapter housing retaining bolts and housing.

(9) Remove rear bearing lock ring and snap ring.

(10) Install front bearing cap temporarily.

(11) Remove rear bearing using Puller Set J-25152.

NOTE: *If the bearing puller plates will not seat in the bearing snap ring groove, tap the end of the clutch shaft with a lead hammer to move the mainshaft rearward and expose the bearing groove fully.*

(12) Remove front bearing cap.

(13) Rotate clutch shaft until flat area of fourth speed gear is in line with the countershaft gear.

(14) Move mainshaft to rear of case and separate clutch shaft from mainshaft by pulling toward front bearing bore. 22 needle bearings will be displaced.

NOTE: *On six-cylinder models the clutch shaft will come out of front bearing bore. On eight-cylinder models the clutch shaft is removed from inside the case after mainshaft assembly removal.*

(15) Remove bearing roller spacer from mainshaft pilot hub (fig. 2B-69).

(16) Remove mainshaft assembly through top of case.

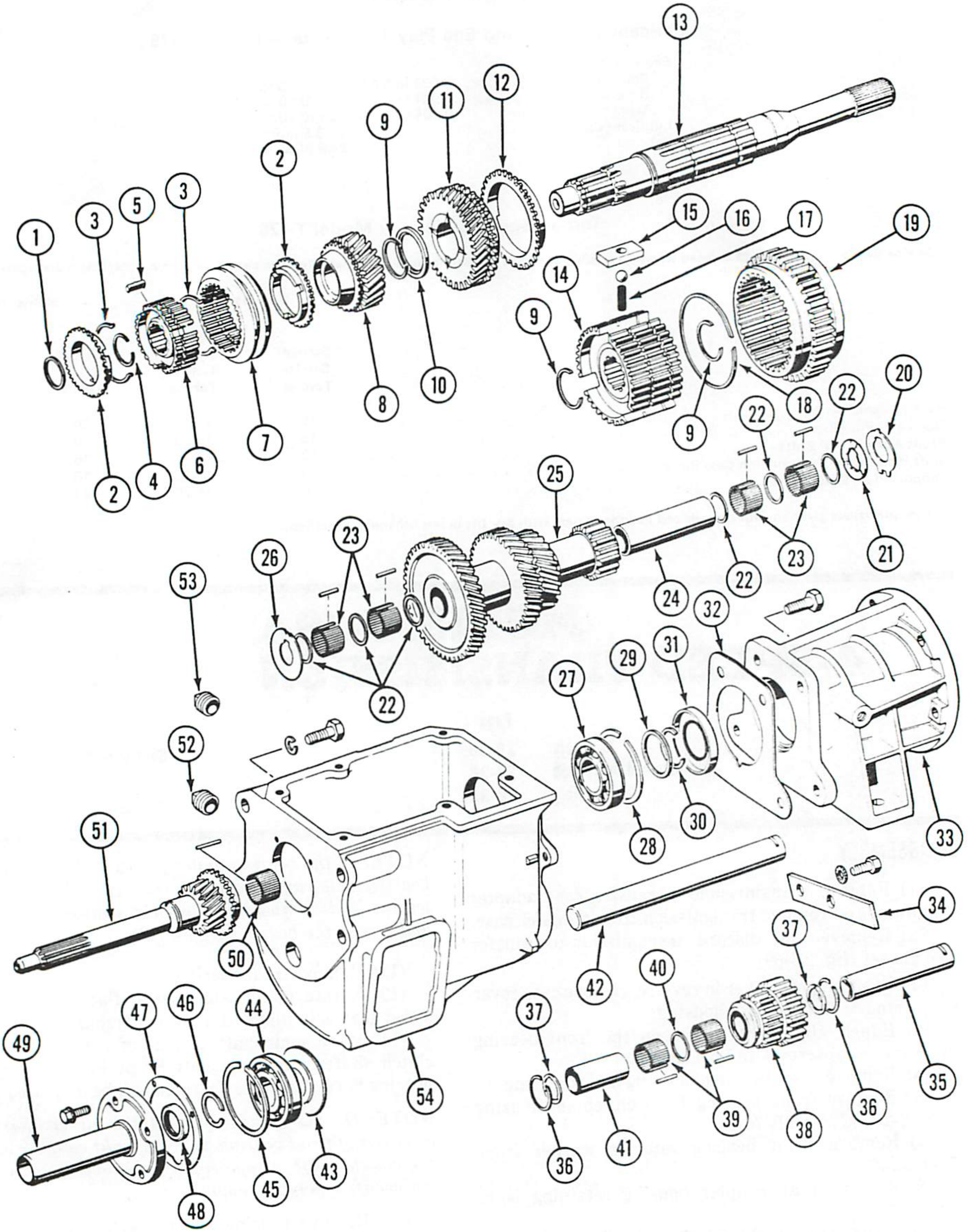

Fig. 2B-69 Model T-18A—4-Speed Transmission

1. MAINSHAFT PILOT BEARING ROLLER SPACER
2. THIRD-FOURTH BLOCKING RING
3. THIRD-FOURTH RETAINING RING
4. THIRD-FOURTH SYNCHRONIZER SNAP RING
5. THIRD-FOURTH SHIFTING PLATE (3)
6. THIRD-FOURTH CLUTCH HUB
7. THIRD-FOURTH CLUTCH SLEEVE
8. THIRD GEAR
9. MAINSHAFT SNAP RING
10. SECOND GEAR THRUST WASHER
11. SECOND GEAR
12. SECOND GEAR BLOCKING RING
13. MAINSHAFT
14. FIRST-SECOND CLUTCH HUB
15. FIRST-SECOND SHIFTING PLATE (3)
16. POPPET BALL
17. POPPET SPRING
18. FIRST-SECOND INSERT RING
19. FIRST-SECOND CLUTCH SLEEVE
20. COUNTERSHAFT GEAR THRUST WASHER (STEEL) (REAR)
21. COUNTER SHAFT GEAR THRUST WASHER (STEEL BACKED BRONZE) (REAR)
22. COUNTERSHAFT GEAR BEARING WASHER
23. COUNTERSHAFT GEAR BEARING ROLLERS (88)
24. COUNTERSHAFT GEAR BEARING SPACER
25. COUNTERSHAFT GEAR
26. COUNTERSHAFT GEAR THRUST WASHER (FRONT)
27. REAR BEARING
28. REAR BEARING LOCATING SNAP RING
29. REAR BEARING SPACER RING
30. REAR BEARING SNAP RING
31. ADAPTER PLATE SEAL
32. ADAPTER PLATE TO TRANSMISSION GASKET
33. ADAPTER TO TRANSMISSION
34. COUNTERSHAFT-REVERSE IDLER SHAFT LOCKPLATE
35. REVERSE IDLER GEAR SHAFT
36. REVERSE IDLER GEAR SNAP RING
37. REVERSE IDLER GEAR THRUST WASHER
38. REVERSE IDLER GEAR
39. REVERSE IDLER GEAR BEARING ROLLERS (74)
40. REVERSE IDLER GEAR BEARING WASHER
41. REVERSE IDLER SHAFT SLEEVE
42. COUNTERSHAFT
43. FRONT BEARING RETAINER WASHER
44. FRONT BEARING
45. FRONT BEARING LOCATING SNAP RING
46. FRONT BEARING LOCK RING
47. FRONT BEARING CAP GASKET
48. FRONT BEARING CUP SEAL
49. FRONT BEARING CAP
50. MAINSHAFT PILOT BEARING ROLLERS (22)
51. CLUTCH SHAFT
52. DRAIN PLUG
53. FILLER PLUG
54. TRANSMISSION CASE

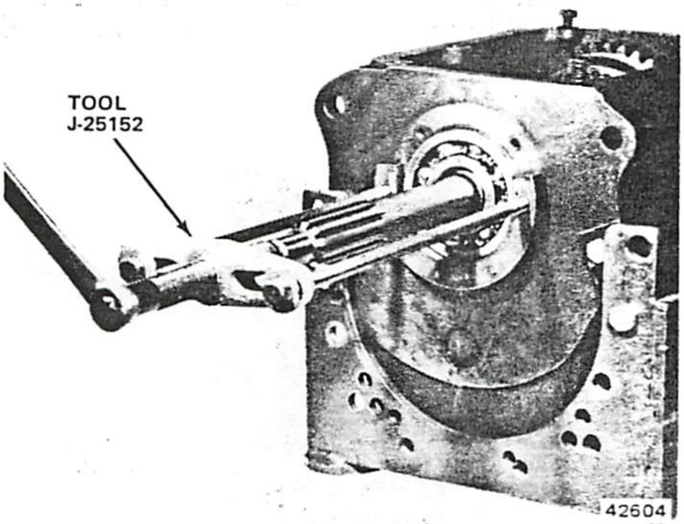

Fig. 2B-70 Front Bearing Removal

(17) Remove clutch shaft through top of case.

(18) Remove lock plate retaining bolt from countershaft and reverse idler gear shaft, and remove lock plate.

(19) Tap countershaft toward rear of case using brass drift and hammer. Stop when end of shaft is approximately even with front inside edge of case bore.

(20) Complete countershaft removal as follows:

(a) Make arbor tool from steel rod 1.115 inches (2.83 cm) in diameter by 9.85 inches (25.01 cm) long.

(b) After making tool, remove all burrs or sharp edges using file.

(c) Insert tool into shaft bore at front of case and drive countershaft out rear of case. Keep tool in constant contact with shaft to avoid displacing bearing rollers or washers.

(21) Tip case on side and remove countershaft gear and arbor tool as assembly.

(22) Remove countershaft gear thrust washers and any mainshaft pilot bearing rollers that may have fallen into case during mainshaft removal.

(23) Remove reverse idler gear shaft using brass drift through front bearing opening in case (fig. 2B-69).

(24) Remove arbor tool from countershaft gear and remove bearing rollers, washers and spacer.

(25) Remove snap rings, bearing rollers, washers and sleeve from reverse idler gear.

(26) Remove fill plug, drain plug and 22 clutch shaft needle bearings from case.

(27) Remove front bearing cap seal and rear adapter seal.

Mainshaft Geartrain Disassembly

(1) Scribe alignment marks on mainshaft splines and clutch hubs for assembly reference.

(2) Remove pilot bearing spacer from front of mainshaft (fig. 2B-69).

(3) Remove third-fourth synchronizer snap ring and remove third-fourth synchronizer assembly and third gear (fig. 2B-69).

(4) Remove first-second synchronizer snap ring and remove first-second synchronizer assembly (fig. 2B-69).

(5) Remove second gear snap ring and remove thrust washer and second gear.

(6) Scribe alignment marks on clutch hubs and sleeves for assembly reference.

(7) Remove insert springs and shifting plates from third-fourth clutch sleeve and remove sleeve from hub. Observe position of springs and plates for assembly reference.

(8) Place first-second synchronizer assembly on workbench and wrap cloth around clutch sleeve. Cloth is necessary to prevent losing shift plate lock balls during disassembly.

(9) Remove clutch sleeve from hub.

(10) Remove cloth from sleeve and remove lock balls, insert spring and shift plates from hub.

CLEANING AND INSPECTION

Clean and inspect the transmission case and all components thoroughly. If any transmission gear requires replacement, also replace the gear with which it meshes. Use new gaskets, oil seals and snap rings during assembly.

Inspect the transmission case for cracks, worn or scored bearing bosses. Examine the ball bearings for cracked races, excessive wear, looseness and for tight fit in the case bores. Inspect all gear teeth for cracks, chips, or spots where gear hardening has worn through. Mainshaft gears must not bind on the shaft and should not exhibit excessive play. Inspect the synchronizer blocking rings for cracks, excessive wear, or pitting in the tapered area of the ring. If thrust washer condition is doubtful, replace them.

Check all bearing rollers for flat spots, pitting, cracks or other damage. Replace rollers as required. Inspect the countershaft and reverse idler shafts for pitting, wear, scores, nicks, cracks and flat spots. Small nicks or scores can be reduced using crocus cloth or a fine-tooth file. Replace shafts if severely worn or damaged. Inspect the mainshaft and synchronizer hubs and sleeves for damaged or worn splines, cracks, worn mainshaft pilot hub and damaged mainshaft threads. Replace parts as required. Check reverse shifting arm and pivot pin for wear or other damage, and replace if necessary.

ASSEMBLY

NOTE: *Prelubricate all components with petroleum jelly during assembly.*

Reverse Idler Gear

(1) Install snap ring in one end of reverse idler gear.

(2) Install thrust washer in gear bore against snap ring.

(3) Insert sleeve in gear bore.

(4) Install 37 roller bearings in one end of gear and install bearing spacer (fig. 2B-69).

(5) Install remaining 37 roller bearings in opposite end of gear and install remaining thrust washer and snap ring.

Countershaft Gear Assembly

(1) Install bearing spacer sleeve in gear and insert arbor tool into gear and through sleeve.

(2) Slide one bearing spacer onto arbor tool and seat spacer against sleeve.

(3) Insert 22 roller bearings into gear bore and seat bearings against spacer just installed.

(4) Slide second bearing spacer onto arbor tool and seat spacer against bearings.

(5) Install 22 more roller bearings in gear bore and seat bearings against second spacer.

(6) Install third bearing spacer on arbor tool and seat spacer against bearings.

(7) Repeat spacer/bearing installation procedure at opposite end of gear.

First-Second Synchronizer Assembly

NOTE: *The third-fourth clutch hub is used to help assemble the first-second synchronizer assembly.*

(1) Place third-fourth clutch hub on workbench.

(2) Install insert spring in first-second clutch hub spring groove.

(3) Position first-second clutch hub on top of third-fourth hub so lock ball holes in first-second hub are in uppermost position (fig. 2B-71).

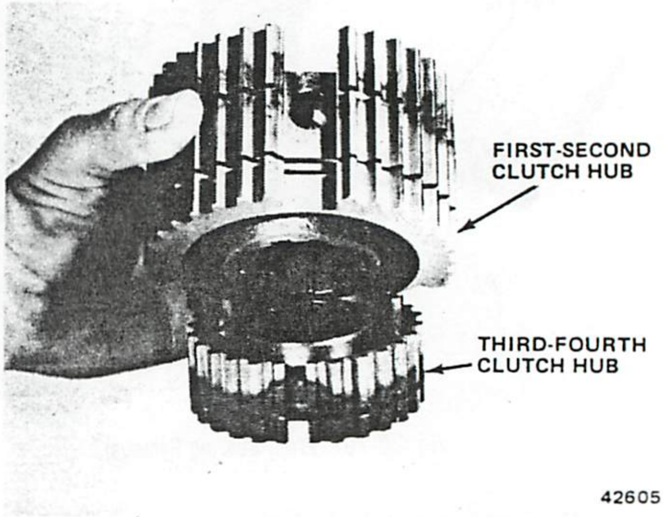

Fig. 2B-71 Supporting First-Second Clutch Hub

(4) Align scribe marks on first-second hub and sleeve and install sleeve on hub (fig. 2B-72). Allow sleeve to bottom against workbench.

(5) Install each shifting plate, poppet spring and lock ball assembly one at a time as follows (fig. 2B-72):

(a) Install shifting plate in hub slot.

(b) Insert poppet spring through plate.

(c) Position lock ball on poppet spring, and compress ball and spring (fig. 2B-72).

NOTE: *To ease lock ball installation use 7/32-inch socket and 1/4-inch drive extension to press lock ball into place.*

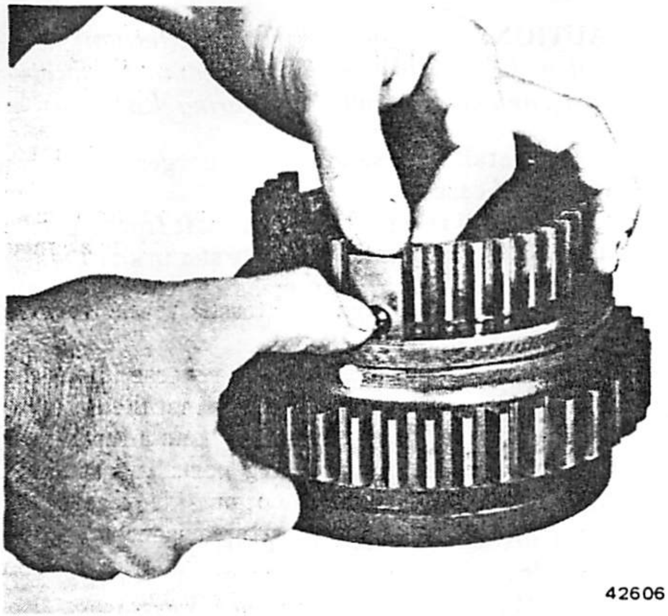

Fig. 2B-72 Assembling First-Second Synchronizer

(d) Maintain pressure on ball and spring and slide shifting plate downward in hub slot until ball is held in position by clutch sleeve.

(6) Install remaining shift plates, poppet springs and lock balls as described in previous step.

(7) Complete synchronizer assembly by pressing down on hub and pulling up on sleeve.

Third-Fourth Synchronizer Assembly

(1) Align and assemble third-fourth clutch hub and sleeve using reference marks made at disassembly.

(2) Insert shifting plates in hub slots.

(3) Install insert springs so one end of each spring is hooked into same shifting plate (fig. 2B-73).

Clutch Shaft Assembly

(1) Lubricate mainshaft bearing rollers and clutch shaft bore with generous quantity of petroleum jelly.

(2) Install 22 bearing rollers in clutch shaft bore. Use additional petroleum jelly to help retain rollers in bore if necessary.

(3) Coat blocking ring with petroleum jelly and install ring on clutch shaft.

Mainshaft and Geartrain Assembly

(1) Install second gear from front of mainshaft (fig. 2B-74).

(2) Install second gear thrust washer so step bore in washer faces front end of mainshaft.

(3) Install second gear snap ring. Be sure thrust washer step bore fits over snap ring.

(4) Install second gear rear snap ring, blocking ring, first-second synchronizer assembly and snap ring from rear of mainshaft.

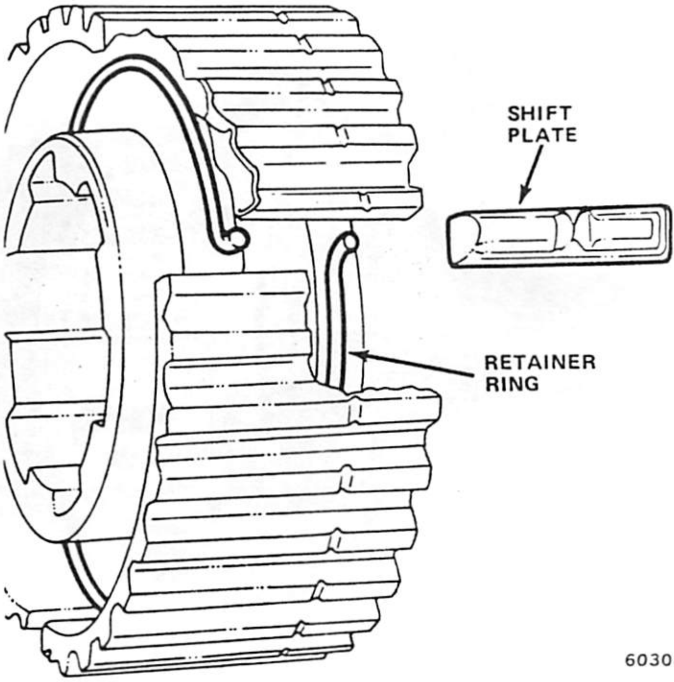

Fig. 2B-73 Third-Fourth Synchronizer Shifting Plate and Retaining Ring Installation

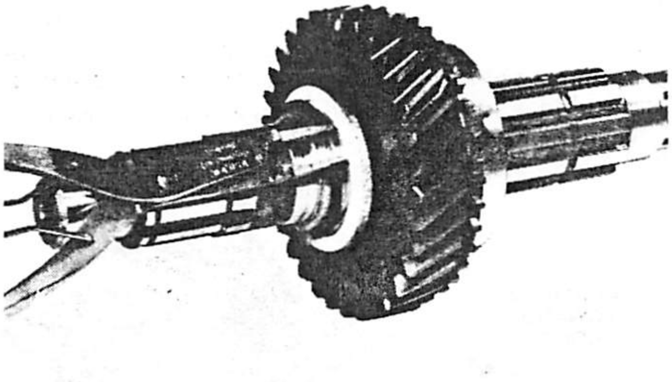

Fig. 2B-74 Second Gear and Thrust Washer Installation

NOTE: *The first-second synchronizer clutch sleeve shift fork groove must face the rear of the mainshaft (fig. 2B-75).*

(5) Install third gear on mainshaft and install blocking ring on gear.

(6) Install third-fourth synchronizer assembly on mainshaft (fig. 2B-69).

NOTE: *The third-fourth synchronizer must be installed with the chamfered side of the hub facing the front of the mainshaft (fig. 2B-76).*

(7) Install third-fourth synchronizer retaining ring (fig. 2B-69).

(8) Install mainshaft bearing roller spacer on shaft pilot hub (fig. 2B-69).

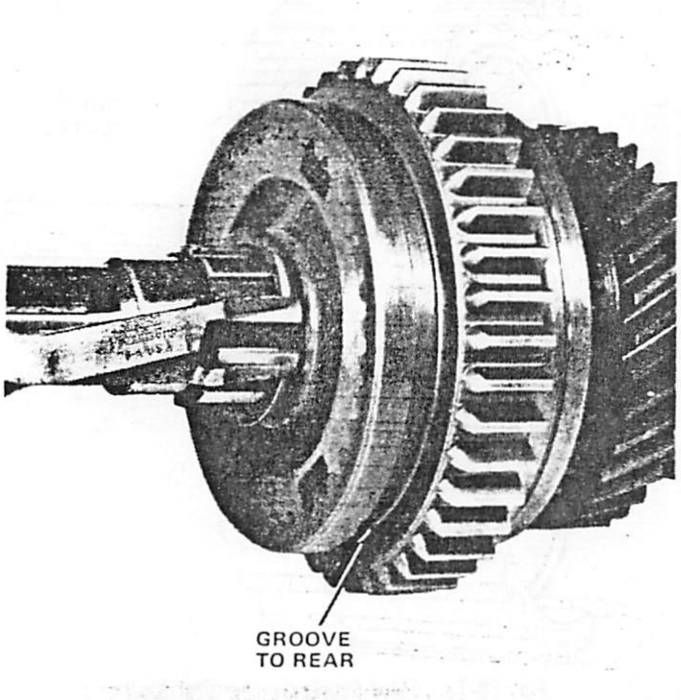

Fig. 2B-75 First-Second Synchronizer Installation

Transmission Case Assembly

(1) Coat countershaft thrust washers with petroleum jelly and install washers in case. Index tab on large, bronze-faced washer in locating recess in front of case. Index notch in smaller, steel washer with locating lug at rear of case.

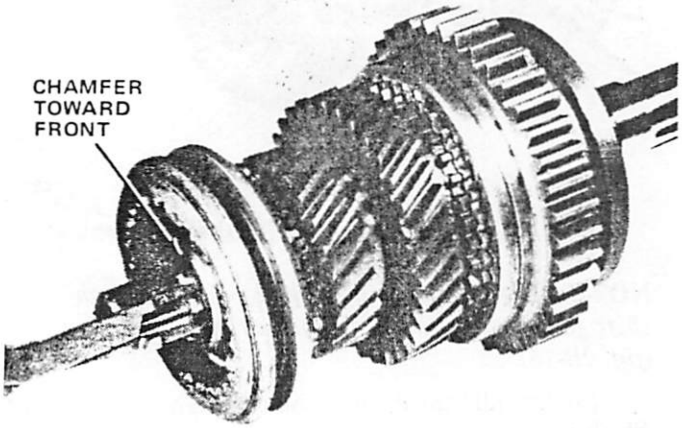

Fig. 2B-76 Third-Fourth Synchronizer Installation

(2) Install countershaft gear assembly.

(3) Install remaining countershaft thrust washer between rear of countershaft gear and smaller, steel thrust washer.

(4) Install countershaft from rear of case but do not install shaft completely. Stop installation when shaft just starts into case front bore.

CAUTION: *When installing the countershaft, keep the shaft and arbor tool in constant contact to avoid displacing any bearing rollers or bearing washers.*

(5) Install reverse idler gear. Larger gear end must face rear of case.

(6) Install reverse idler gear shaft from rear of case. Tap shaft forward until lock plate slot in shaft is aligned with lock plate slot in countershaft.

(7) Install lock plate in countershaft and reverse idler gear shaft slots.

(8) Tap ends of countershaft and reverse idler gear shafts alternately until shafts are fully installed.

(9) Insert assembled clutch shaft and fourth gear blocking ring in case front bearing bore. Insert shaft from case interior, not from front or outside of case.

(10) Install mainshaft and geartrain assembly.

(11) Install mainshaft pilot bearing roller spacer on mainshaft pilot hub if not installed previously.

(12) Insert mainshaft pilot hub in clutch shaft bore. Be sure bearing rollers in clutch shaft are not displaced and that fourth gear blocking ring notches are aligned with shifting plates.

(13) Install front bearing cap temporarily to support clutch shaft.

(14) Install retaining snap ring on rear bearing and drive bearing onto mainshaft and into case rear bore. Seat snap ring against case.

CAUTION: *During rear bearing installation avoid wedging each blocking ring on its mating tapered surface.*

(15) Install replacement oil seal in transfer case adapter plate.

CAUTION: *The adapter plate oil seal must be installed correctly to prevent lubricant flow from the transfer case into the transmission. When correctly positioned, the seal lip will face the transfer case (fig. 2B-77).*

(16) Coat lip of adapter plate oil seal with petroleum jelly.

(17) Position replacement transmission-to-adapter gasket on transmission and install adapter plate. Apply nonhardening sealer to adapter plate attaching bolts and install bolts.

(18) Remove front bearing cap and install front bearing retaining washer on clutch shaft with dished side of washer facing mainshaft.

(19) Slide front bearing onto clutch shaft and tap bearing into case bore using section of pipe or driver sleeve (fig. 2B-78). Be sure to seat bearing against clutch shaft gear shoulder and front bearing retainer washer.

CAUTION: *During front bearing installation avoid wedging each blocking ring on its mating tapered surface.*

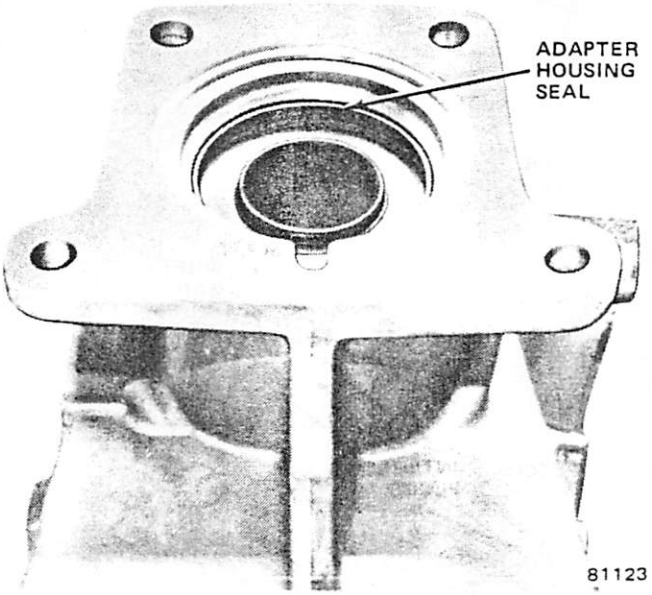

Fig. 2B-77 Adapter Plate Oil Seal Position

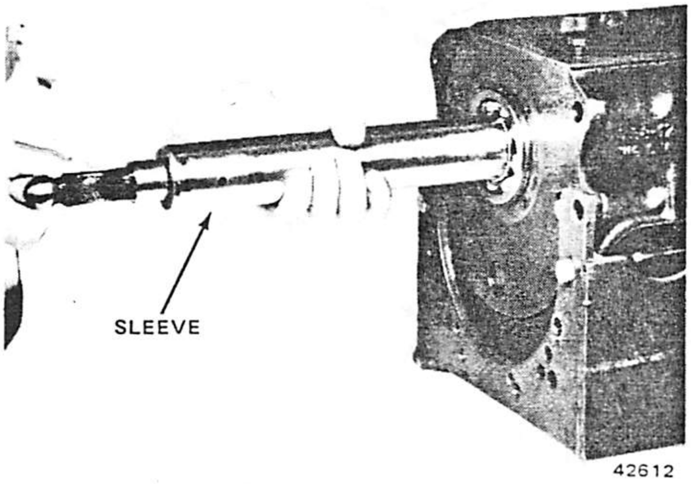

Fig. 2B-78 Front Bearing Installation

(20) Install thickest front bearing lock ring in clutch shaft ring groove.

NOTE: *The front bearing lock rings are available in four thicknesses.*

(21) Pull clutch shaft and front bearing forward just far enough to expose locating snap ring groove in bearing. Install locating snap ring and push clutch shaft rearward until locating snap ring seats against case.

(22) Position front bearing cap gasket on front bearing cap. Coat threads of bearing cap attaching bolts with nonhardening sealer. Align oil return holes in cap, gasket and case, and install attaching bolts. Tighten bolts to 15 foot-pounds (20 N•m) torque.

(23) Check all synchronizer blocking rings for free movement. If blocking rings were wedged onto the tapered hubs of the clutch shaft, third and second speed gears during bearing installation, pry them free using screwdriver.

(24) Move synchronizer sleeves to Neutral position.

(25) Install fill and drain plugs and pour two pints of gear lubricant over all gears while rotating mainshaft.

(26) Coat shift control housing with RTV sealer, or equivalent, and install housing on case. Be sure shift forks engage synchronizer sleeves and that reverse shift arm engages flat on reverse shift rail.

(27) Coat shift lever housing attaching bolts with nonhardening sealer and install bolts. Tighten bolts to 12 foot-pounds (16 N•m) torque.

(28) Shift gears through all positions to check operation.

(29) Assemble transfer case and transmission and tighten attaching bolts to 30 foot-pounds (41 N•m) torque.

SHIFT CONTROL HOUSING

Disassembly

(1) Unthread shift lever cap and remove cap, gasket if equipped, spring seat, spring and shift lever as assembly (fig. 2B-79).

(2) Remove shift lever locating pins from housing (fig. 2B-79).

(3) Mount housing in vise with shift forks facing upward.

(4) Remove backup lamp switch.

(5) Remove shift rail bore plugs using hammer and punch.

(6) Move shift rails to Neutral position.

(7) Remove roll pins attaching shift forks and shift gates to shift rails. Use hammer and pin punch to remove pins.

(8) Cover poppet ball holes in housing with tape to prevent ball or spring loss during removal.

(9) Remove shift rails. Tap rails out of housing using hammer and brass punch.

(10) Remove interlock pin from third-fourth shift rail.

(11) Remove shift forks and shift gates. Be sure to mark or note position of forks and gates for assembly reference before removal.

(12) Remove poppet balls and springs from housing.

(13) Remove interlock plungers from housing.

(14) Remove retaining clip from reverse shift gate and remove spring and plunger from gate.

(15) Inspect housing breather. Remove breather if damaged or restricted in any way.

Assembly

(1) Install replacement breather in housing, if removed.

(2) Install spring and plunger in reverse shift gate. Compress plunger and install plunger retaining clip.

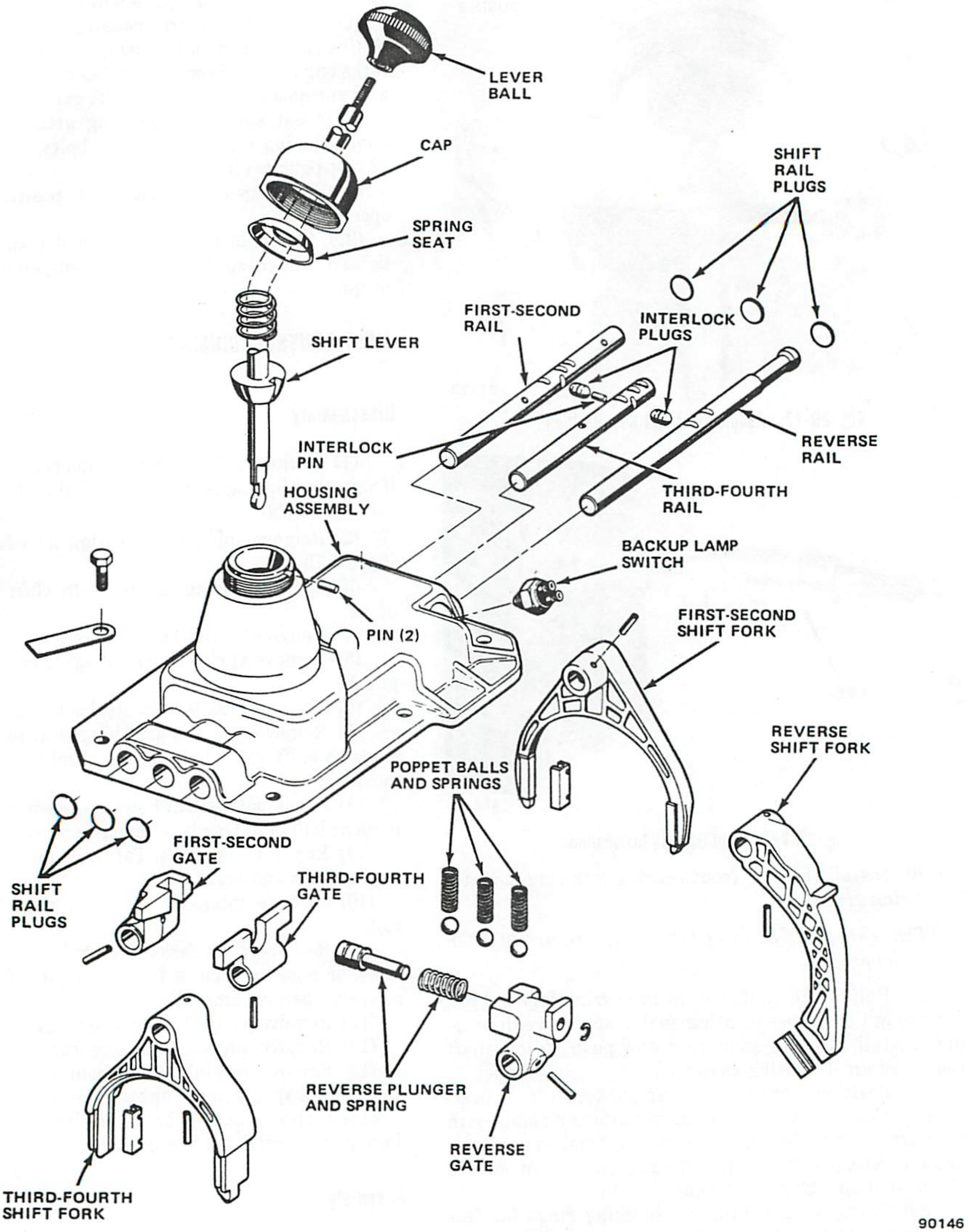

Fig. 2B-79 Shift Control Housing—Transmission Model T-18A

(3) Insert reverse shift rail into housing. Install reverse shift fork on rail and slide rail up to but not into shift rail poppet bore.

(4) Install poppet spring and ball in reverse shift rail poppet bore. Compress ball and spring using punch and slide rail through bore.

(5) Install reverse shift gate on opposite end of shift rail and slide rail into housing until poppet ball engages in rail notch. Install shift gate so plunger pin boss faces rear of housing (fig. 2B-80).

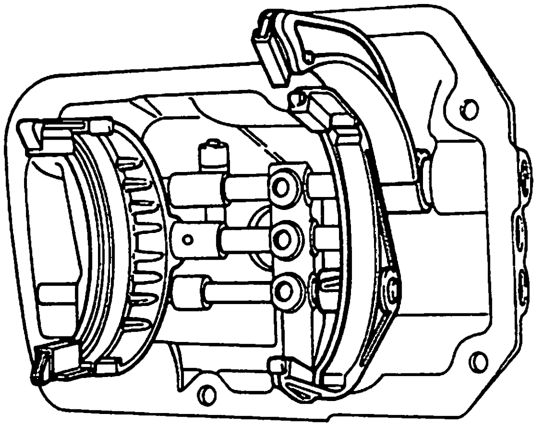

Fig. 2B-80 Shift Fork/Shift Gate Position

(6) Align and install roll pins that fasten reverse shift fork and shift gate to shift rail.

(7) Install interlock plungers in pockets located between housing shift rail poppet bores.

(8) Insert first-second shift rail into housing. Install first-second shift fork on rail so fork offset faces rear of housing (fig. 2B-80). Slide shift rail up to but not into shift rail poppet bore.

(9) Install poppet spring and ball in first-second shift rail poppet bore. Compress ball and spring using punch and slide shift rail through bore.

(10) Install first-second shift gate on opposite end of shift rail and slide rail into housing until poppet ball engages in rail notch.

(11) Align and install roll pins that fasten first-second shift fork and shift gate to shift rail.

(12) Insert third-fourth shift rail through center bore in housing. Install third-fourth shift gate on rail so flat tang on gate faces front of housing (fig. 2B-80).

(13) Coat interlock pin with petroleum jelly (to hold it in place) and install pin in third-fourth shift rail pin bore.

(14) Install poppet spring and ball in third-fourth shift rail poppet bore. Compress ball and spring using punch and slide rail through bore.

(15) Install third-fourth shift fork on shift rail and slide rail into housing until poppet ball engages in rail notch.

(16) Align and install roll pins that fasten third-fourth shift fork and shift gate to shift rail.

NOTE: *To avoid hard shifting after assembly, be sure the third-fourth shift gate roll pin is installed so it is flush with the bottom of the shift gate notch.*

SPECIFICATIONS

Transmission Specifications — Model T-18A

Model	T18A
Type	Synchromesh
Speeds	4 Forward, 1 Reverse
Gear Ratios:	
First (Low)	6.32:1
Second	3.09:1
Third	1.69:1
Fourth	1.00:1
Reverse	7.44:1
End Play Tolerances	All end play controlled by selective thickness snap rings. Use thickest snap rings available.
Lubricant Capacity	6-1/2 Pints (3.07 liters)
Lubricant Type	SAE 85W-90 Gear Lubricant

80122

Torque Specifications — Model T-18A

Service Set-To Torques should be used when assembling components. Service In-Use Recheck Torques should be used for checking a pre-tightened item.

	USA (ft-lbs)		Metric (N·m)	
	Service Set-To Torque	Service In-Use Recheck Torque	Service Set-To Torque	Service In-Use Recheck Torque
Backup Lamp Switch	18	15-20	24	20-27
Drain Plug	15	10-20	20	14-27
Fill Plug	15	10-20	20	14-27
Front Bearing Cap Bolt	15	12-18	20	16-24
Shift Control Housing-to-Case Bolt	12	10-15	16	14-20
Transfer Case Drive Gear Locknut	150	145-155	203	197-210
Transfer Case-to-Transmission Case Bolt	30	25-35	41	34-47
TCS Switch	18	15-20	24	20-27

All torque values given in foot-pounds and newton-meters with dry fits unless otherwise specified.

Refer to the Standard Torque Specifications and Capscrew Marking chart in Chapter A for torque values not listed above.

80123

Transmission Gear Ratios

ENGINE-VEHICLE MODEL	T4					T5					
	1st	2nd	3rd	4th	REV.	1st	2nd	3rd	4th	5th	REV.
4-Cylinder CJ-5, CJ-7, Scrambler	4.03:1	2.37:1	1.50:1	1.00:1	3.76:1						
4-Cylinder CJ-5, CJ-7, Scrambler*						4.03:1	2.37:1	1.50:1	1:00:1	0.76:1	3.76:1
4-Cylinder CJ-5, CJ-7, Scrambler**						4.03:1	2.37:1	1.50:1	1:00:1	0.86:1	3.76:1
6-Cylinder CJ-7, Scrambler	4.03:1	2.37:1	1.50:1	1.00:1	3.76:1						
6-Cylinder Cherokee, Wagoneer, J-10 Truck						4.03:1	2.37:1	1.50:1	1.00:1	0.76:1	3.76:1

* with 4.09 axle ratio
** with 3.54 axle ratio

ENGINE-VEHICLE MODEL	T-176					T-18A				
	1st	2nd	3rd	4th	REV.	1st	2nd	3rd	4th	REV.
6-Cylinder CJ-5, CJ-7, Scrambler	3.82:1	2.29:1	1.46:1	1.00:1	3.82:1					
6-Cylinder Cherokee, Wagoneer, J-10 Truck	3.82:1	2.29:1	1.46:1	1.00:1	3.82:1					
8-Cylinder Cherokee, Wagoneer, J-10 Truck	3.52:1	2.27:1	1.46:1	1.00:1	3.52:1					
J-20 Truck						6.32:1	3.09:1	1.69:1	1.00:1	7.44:1

90577

AUTOMATIC TRANSMISSION 2C

SECTION INDEX

GENERAL INFORMATION

GENERAL

The automatic transmissions used in Jeep vehicles are fully automatic, three speed, hydraulically operated units with a compound planetary gear system. A three element torque converter is used for all applications. A manually operated column gearshift linkage is used to select the desired gear range. Transmission shift points are controlled by an externally mounted throttle linkage. The transmission case and converter housing consists of a one-piece aluminum casting. An aluminum adapter housing is used to connect the transmission to the various transfer case models.

Transmission Applications

Two automatic transmission models are used. They are models 999 and 727 (fig. 2C-1). Model 999 transmissions are used with six-cylinder engines in CJ-7 and Scrambler models and Cherokee, Wagoneer and J-10 Trucks with a 2.73 axle ratio with a six-cylinder engine. This transmission has a wide ratio gear set with a low gear ratio of 2.74 to 1. The model 727 transmission is used in Cherokee, Wagoneer and Truck models with six- or eight-cylinder engines. An automatic transmission is not available in CJ-5 models or any Jeep model with a four-cylinder engine.

Lockup Torque Converter

CJ-7 and Scrambler models with six-cylinder engine and Cherokee, Wagoneer and Truck models with six- or eight-cylinder engine use a lockup torque converter (fig. 2C-2). The lockup torque converter is similar to a conventional unit in that a turbine, impeller, and stator are employed. However, unlike a conventional unit, the lockup converter has an internal mechanism for locking the turbine and impeller in direct drive (third gear). In a conventional converter, there is always some slippage between turbine and impeller in direct drive. By locking these components, slippage is eliminated resulting in improved fuel economy and reduced fluid operating temperatures.

The lockup system consists of a lockup mechanism within the converter, a lockup module attached to the valve body, and a switch valve in the valve body. The switch valve is actually the converter control valve which has been modified for lockup system use.

The converter internal lockup mechanism consists of a sliding clutch piston, torsion springs, and clutch friction material. The friction material is attached to the front cover, the clutch piston is mounted in the turbine, and the torsion springs are located on the forward side of the

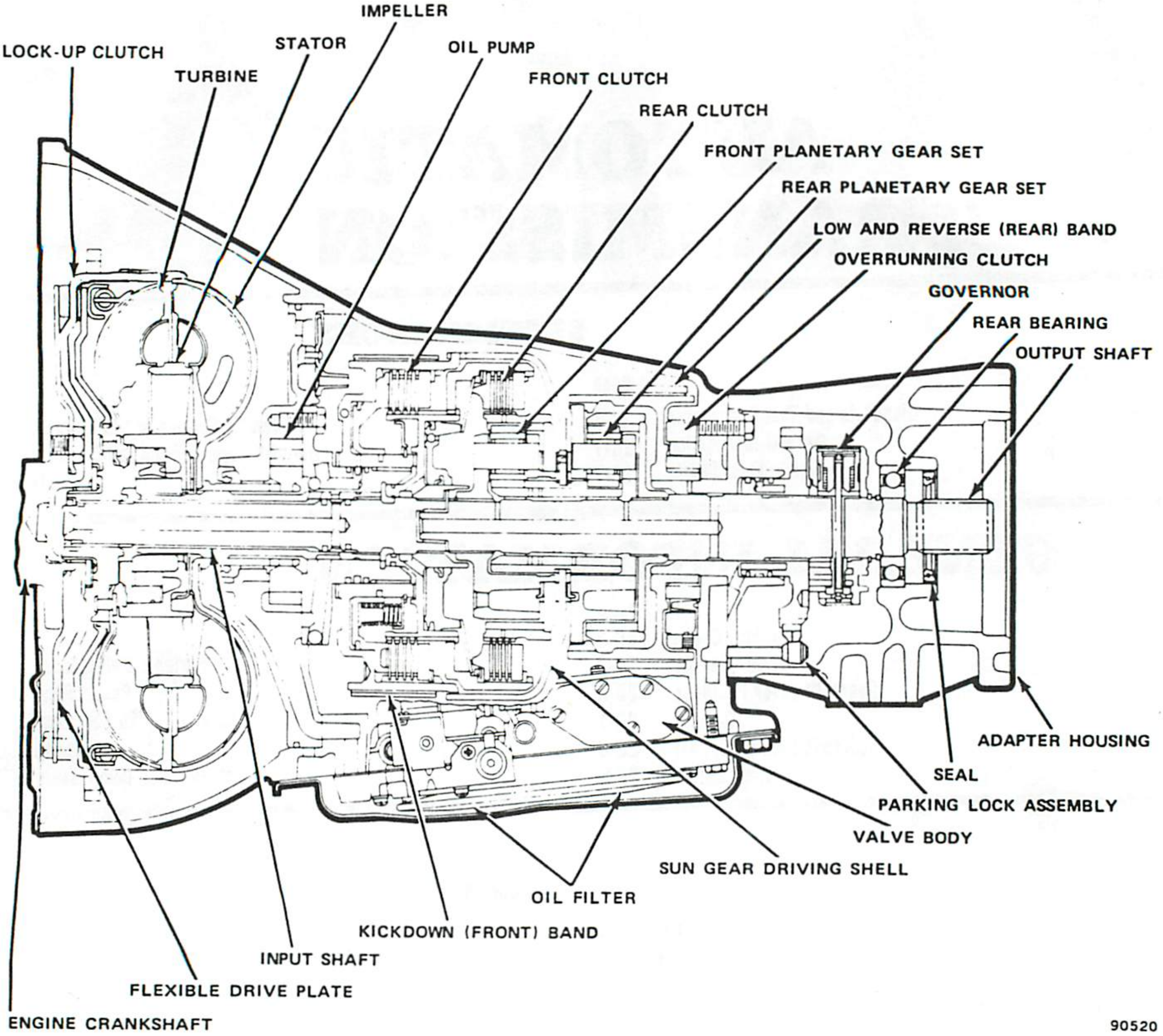

Fig. 2C-1 Automatic Transmission Models 999/727

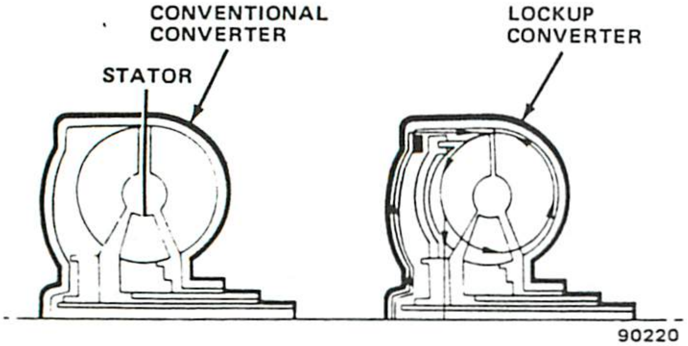

Fig. 2C-2 Lockup Torque Converter Cross Section

turbine. The torsion springs dampen engine firing impulses and absorb shock loads that occur during lockup.

When the transmission shifts into direct drive and vehicle speed reaches approximately 42 mph (68 km/h), transmission fluid is channeled through the input shaft and into the area between the clutch piston and turbine. At this point, fluid pressure extends the piston pressing it against the front cover friction material locking the turbine to the impeller (fig. 2C-3). When vehicle speed drops below 42 mph (68 km/h) or the transmission shifts out of direct drive, fluid pressure is released, the clutch piston retracts, and the converter operates in a conventional manner again.

Torque Converter Service

The torque converter is a welded assembly and is not

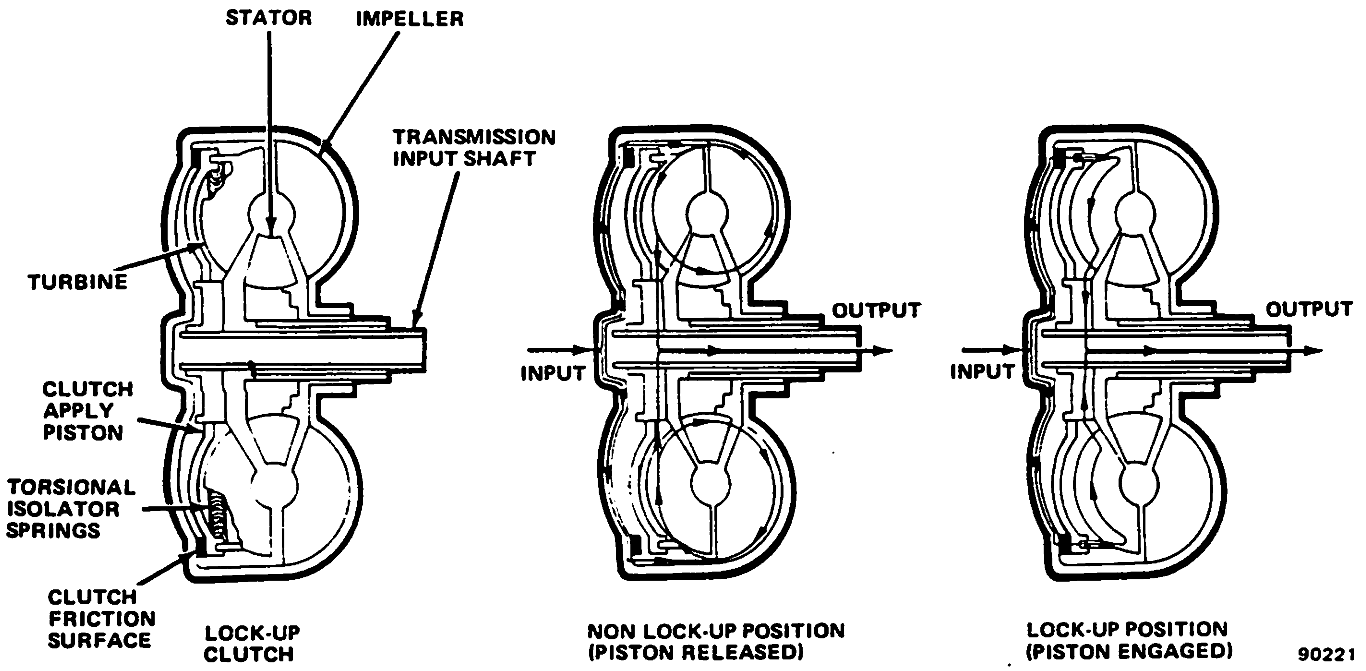

Fig. 2C-3 Lockup Torque Converter Operation

serviceable. If diagnosis indicates a malfunction has occurred or if the converter becomes contaminated with foreign material, replace the converter as an assembly only. Do not attempt to repair or flush the unit. In addition, never attempt to interchange lockup and conventional converters. The transmission input shaft and valve body required for lockup operation are markedly different.

Lockup Converter Control System

The system controls consist of a lockup module attached to the valve body and a switch valve located within the valve body. The switch valve is actually the converter control valve which has been modified for lockup system use. The lockup module contains a fail safe valve and a lockup valve and is used for lockup converter applications only.

The lockup valve reacts to governor pressure and directs the switch valve to move in or out of lockup position (fig. 2C-4). The switch valve controls fluid flow to the converter clutch piston. The fail safe valve is a protective device in that it permits lockup only in direct drive and only if front clutch apply pressure (as received from the 2-3 shift valve) is sufficient.

The lockup control system is operative in direct drive only and system components are calibrated to produce lockup at a vehicle speed and governor pressure of approximately 42 mph (68 km/h) and 38 psi (263 kPa). In operation, governor pressure reaches lockup point and overcomes lockup valve spring tension which moves the valve to the left (fig. 2C-4). This allows line pressure from the rear clutch circuit to enter the fail safe valve. As the lockup valve moves left, governor pressure against the 2-3 governor plug also moves the 2-3 shift valve into direct drive position. At this point, line pressure is channeled from the 2-3 shift to the shuttle valve, is further directed into and past the lockup valve, and to the right-side of the fail safe valve; this overcomes throttle and spring pressure moving the fail safe valve to the left. As soon as the fail safe valve moves left, line pressure is directed to the top of the switch valve moving the valve downward. As the valve moves downward, fluid flows past the valve, into the input shaft fluid channels, and into the converter where it applies the clutch piston producing lockup.

Fluid Capacity

The fluid capacities stated for each transmission model reflect the combined or total amount required for both transmission and torque converter.

• Model 999	17 pints (8 liters)
• Model 727	17 pints (8 liters)

AUXILIARY COOLER

A transmission auxiliary cooler is standard equipment on all J-20 Truck models and on all Cherokee, Wagoneer and J-10 Truck models equipped with a snow plow or trailer tow package. The auxiliary cooler augments the transmission cooler in the radiator lower tank to prevent fluid overheating during heavy-duty operation. The auxiliary cooler is located behind the grille. It is mounted on the grille face panel assembly in front of the A/C condenser and radiator (fig. 2C-5).

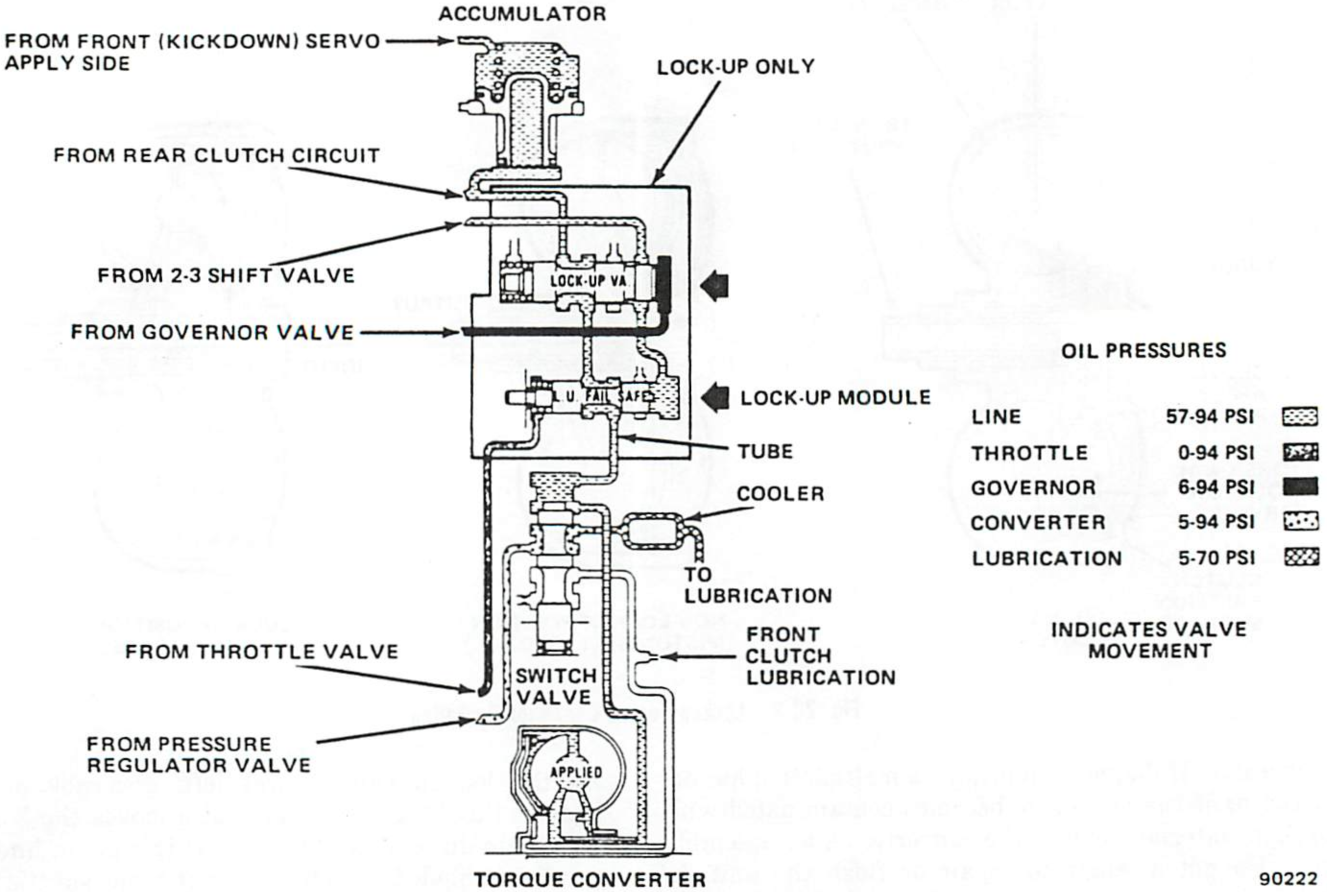

Fig. 2C-4 Lockup Torque Converter Control System

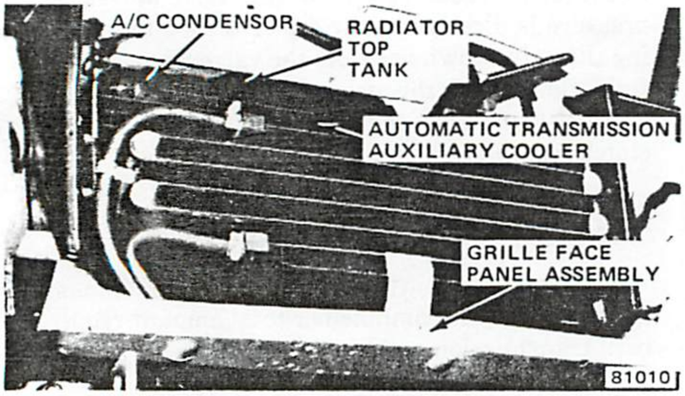

Fig. 2C-5 Auxiliary Cooler Mounting

Auxiliary Cooler Service

If it becomes necessary to overhaul the transmission to correct a malfunction that generated sludge or heavy accumulations of metal particles or friction material, the auxiliary cooler and cooler hoses must also be flushed thoroughly along with the radiator cooler.

The radiator cooler flushing procedure is outlined in this chapter. Refer to Flushing Oil Cooler and Cooler Lines.

If the auxiliary cooler must be removed and installed for servicing or for access to another component, refer to the following procedure.

Auxiliary Cooler Removal

(1) Remove screws and washers attaching grille panel to grille face panel assembly.

(2) Remove grille panel.

(3) Tag cooler hoses for assembly reference.

(4) Position drain pan under cooler.

(5) Loosen clamps attaching cooler hoses to cooler fittings (fig. 2C-6).

(6) Slide cooler hoses off cooler fittings. Cover hose ends to prevent entry of dirt.

(7) Remove screws attaching cooler to grille face panel and remove cooler.

Auxiliary Cooler Installation

(1) Position cooler on grille face panel and install cooler attaching screws.

(2) Remove protective covering from ends of cooler hoses and install hoses on cooler fittings.

(3) Tighten cooler hose clamps securely.

(4) Position grille panel on grille face panel and install grille panel attaching screws.

(5) Check and correct transmission fluid level.

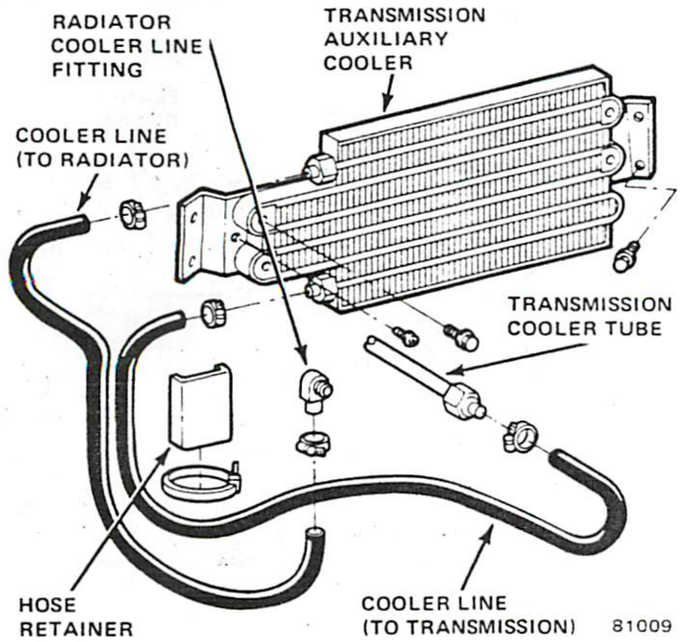

Fig. 2C-6 Auxiliary Cooler Assembly

TRANSMISSION COMPONENTS

Clutch-Band-Gear System

Transmission models 999 and 727 each have two multiple disc clutches, two bands and actuating servos, an overrunning clutch and two planetary gear sets, all of which combine to provide one reverse and three forward gear ranges. The planetary gear sets are connected by a common sun gear. The sun gear is interconnected to the multiple disc clutches through the driving shell which is splined to the sun gear and front clutch retainer.

The model 999 transmission has a wide ratio planetary gear set. Ratios are:

• 1st Gear	2.74:1
• 2nd Gear	1.55:1
• 3rd Gear	1.00:1
• Reverse	2.20:1

Hydraulic System

The hydraulic system consists of a single oil pump, a valve body containing the pressure regulating shift control, and lockup control valves, a governor valve assembly, two band actuating servos and an accumulator.

Fluid Cooling and Filtration

The transmission fluid is cooled by circulating the fluid through an external cooler built into the radiator lower tank.

Transmission fluid is filtered by a Dacron element filter attached to the valve body. The filter is a serviceable component and can be replaced whenever diagnosis or service requirements indicate the need.

Transmission Venting

The transmission is vented through a passage drilled into the upper portion of the oil pump housing.

IDENTIFICATION

The model 999 transmission has a double wrap rear band and external characteristics that will readily identify it. The 999 model has reinforcing ribs cast into the top of the rear servo boss on the case.

The 727 model is physically larger, being designed for use with eight-cylinder engines or for heavy-duty applications. Major internal differences between the 727 and 999 models are in the rear clutch, valve body, kickdown servo, planetary gear assemblies and end play adjustments. The 727 has an external characteristic that distinguishes it from 999 models: the slope of the converter housing is much more gradual.

Lockup Torque Converter Identification

Because the lockup mechanism is completely enclosed within the converter and not visible, lockup converters have an identifying decal attacched to the front cover.

The decal is circular in shape and states converter type and stall ratio such as, Lockup and LS (low stall) or HS (high stall).

Transmission Code and Part Numbers

A seven-digit transmission part number is stamped on the left side of the case just above the oil pan mating surface (fig. 2C-7). This number is followed by a four-

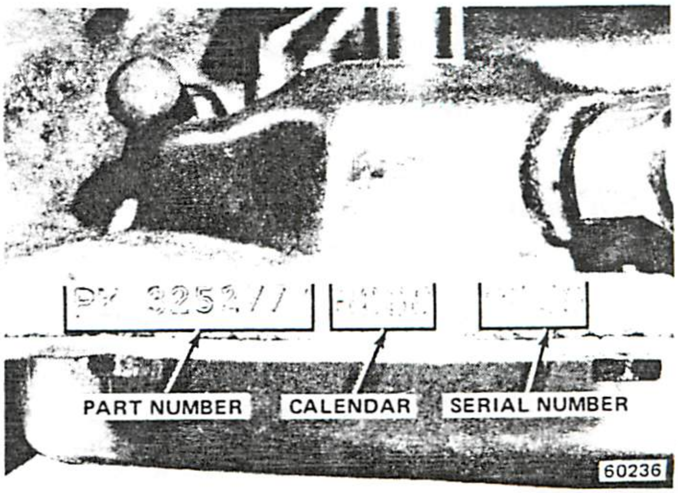

Fig. 2C-7 Transmission Code and Part Numbers digit code number which indicates date of manufacture. The final four-digit number group stamped on the case represents the transmission serial number (fig. 2C-7).

POWER FLOW

The torque converter front cover and impeller, which is welded to the cover, are connected to the engine crankshaft by a drive plate and to the transmission input shaft by the converter overrunning clutch. In operation, power flow is as follows: Engine torque is transmitted to the torque converter front cover through the drive plate which connects the crankshaft and converter. The converter multiplies engine torque and transmits this torque directly to the input shaft and subsequently to the multiple disc clutches in the transmission.

The clutches then transfer engine torque through the two planetary gear sets and to the transmission output shaft. However, the actual torque flow path through the planetary gear sets is dependent on the clutch/band combination in effect at that point in transmission operation. Refer to the Clutch and Band Application Chart for details.

The torque transmitted through the planetary gear sets is applied to the transmission output shaft. Torque is then transferred through the transfer case and to the axles by the propeller shafts to complete the torque transfer cycle.

Torque Flow

Neutral-Park Position

In Neutral and Park positions, none of the transmission clutches or bands are applied (fig. 2C-8).

With the engine running, torque is transmitted to the front clutch hub/rear clutch retainer by the input shaft. However, since clutch—band application has not occurred, torque flow stops at the rear clutch retainer. The rear clutch plates which are splined to the rear clutch retainer, rotate with the retainer at engine speed and direction of rotation. The rear clutch discs, which are splined to the front annulus gear, remain stationary.

Drive-First Gear

In Drive-first gear, the rear clutch is applied and the overrunning clutch holds the rear planetary gear carrier.

When shifted into Drive, the valve body directs fluid at operating pressure into the rear clutch retainer. Fluid pressure locks the rear clutch lined discs against the steel plates applying the clutch. Since the lined discs are splined to the front annulus gear, the rear clutch retainer and annulus gear are locked together (figs. 2C-8 and 2C-9). Engine torque is now transmitted through the rear clutch retainer to the front annulus gear, turning the gear at engine speed and direction of rotation. The front planetary gears, which are meshed with the front annulus gear, also rotate at engine speed and direction of rotation.

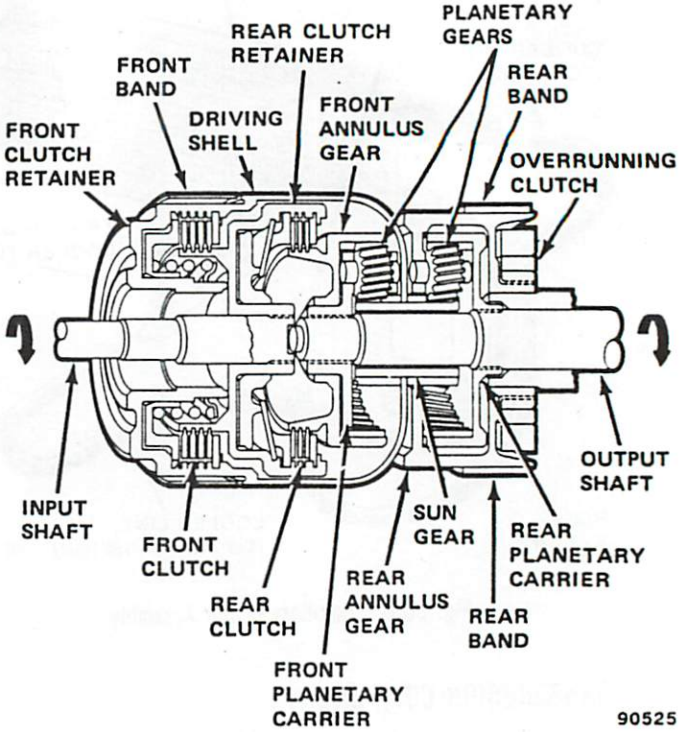

Fig. 2C-8 Clutch, Band and Gear System

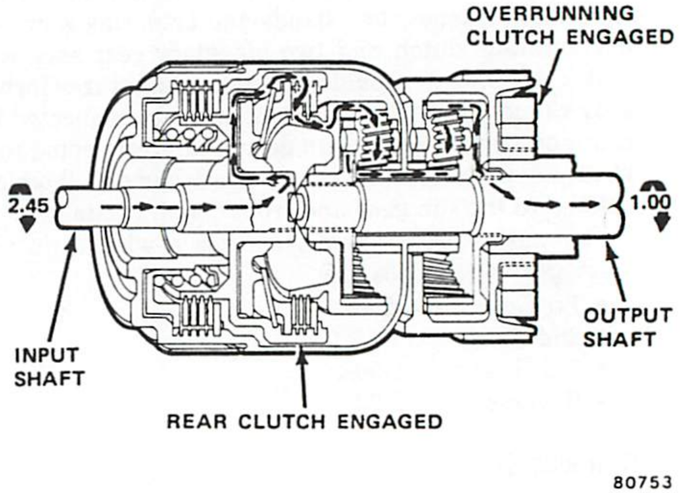

Fig. 2C-9 Torque Flow in Drive-First Gear

Both front and rear planetary gears are in mesh with the sun gear (fig. 2C-9). The sun gear has a reverse helix which causes it to revolve opposite engine rotation when turned by the front planetary gears. However, as a result of this helix, the sun gear causes the rear planetary gears to revolve in the same direction as engine rotation.

At this point, torque flow is through the rear clutch and front annulus gear, into the front planetary gears and to the rear planetary gears through the counter-rotating sun gear (fig. 2C-9).

The rear annulus gear is splined to the output shaft. The rear planetary gear carrier is locked to the low-reverse drum which in turn is splined to the overrunning clutch inner race. The overrunning clutch permits carrier/drum rotation in the direction of engine rotation only; the clutch locks up if turned opposite engine rotation.

With the rear annulus gear stationary, the action of the revolving rear planetary gears on the rear annulus gear causes the rear planetary carrier and low/reverse drum to rotate opposite engine direction. However, because the low/reverse drum is splined to the overrunning clutch, the clutch locks up preventing both drum and carrier from turning in a direction opposite to engine rotation.

Because the rear planetary carrier and low/reverse drum are held stationary by the overrunning clutch, torque is then transferred to the output shaft through the rear annulus gear which is splined to the shaft.

Drive-Second Gear

In Drive-second gear, the front band is applied in addition to the rear clutch which remains applied from Drive-first gear. The overrunning clutch is not employed in this gear and free wheels.

In response to increasing speed and pressure signals from the governor and throttle linkage, the transmission upshifts to second gear. The front servo is charged with fluid at operating pressure to apply the front band and complete the 1-2 upshift.

When the front band is applied, it holds the front clutch retainer preventing the retainer from turning. Because the retainer is locked to the driving shell, the shell and sun gear which is splined to the driving shell are also held stationary (fig. 2C-10).

Since the rear clutch is still applied, engine torque continues to flow through the rear clutch retainer to the front annulus gear turning the gear at engine speed and direction of rotation. However, because the sun gear is now stationary, front annulus gear rotation causes the front planetary gears to revolve in engine direction of rotation. This action causes the front planetary carrier to also rotate in engine direction but at a reduced speed.

Engine torque is then transferred directly to the output shaft through the front planetary carrier which is splined to the shaft (fig. 2C-10). Note that torque flow occurs through the front planetary gears only in Drive-second gear. The rear planetary gears are in an idling condition and the low/reverse drum is freewheeling with the overrunning clutch. Although the rear annulus gear revolves with the output shaft, it does so only because it is splined to the shaft.

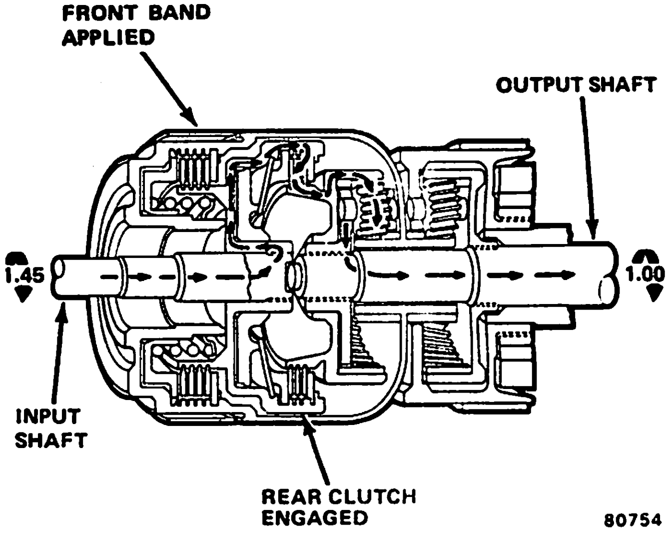

Fig. 2C-10 Torque Flow In Drive-Second Gear

Drive-Third Gear

In Drive-third gear, the front clutch is applied in addition to the rear clutch which remains applied from Drive-second gear.

When vehicle speed reaches 2-3 upshift range, front servo fluid is evacuated releasing the front band. At the same time, the front clutch retainer is charged applying the clutch.

Now that both clutches are applied, engine torque is transmitted through the front clutch retainer in addition to the rear clutch retainer and front annulus gear (fig. 2C-11). Since the rear clutch retainer is always locked to the driving shell, torque is also transferred through the sun gear which is splined to the shell. This causes the sun gear to revolve at engine speed and direction of rotation.

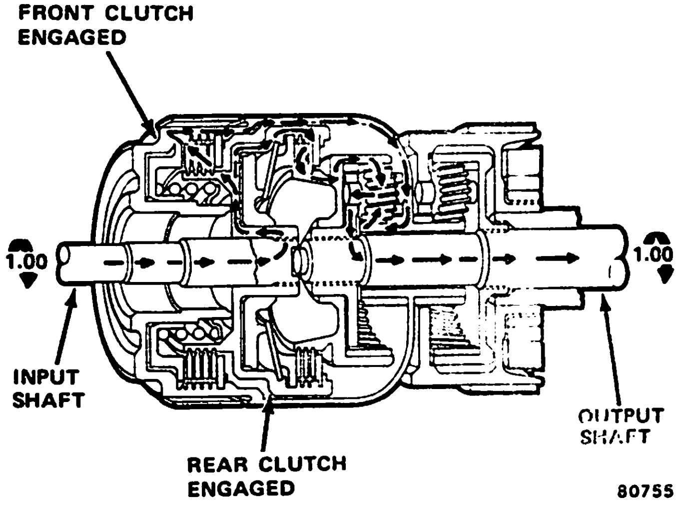

Fig. 2C-11 Torque Flow In Drive-Third Gear

Because torque is still transmitted through the rear clutch retainer, front annulus gear and front planetary gear carrier, the front planetary gears transmit torque to the output shaft through the front planetary carrier which is splined to the shaft. The rear planetary gears are locked to the sun gear and the rear annulus gear and low/reverse drum rotate with the output shaft but do not transmit torque.

The front and rear planetary gears are not rotating in Drive-third gear. The only rotation present is the input from the engine and the output shaft. All other connected parts rotate as one common unit.

Manual First Gear 1 Position

Torque flow in manual first gear is the same as in Drive-first gear except an additional element is employed. Along with the rear clutch, the rear band is also applied to provide engine braking action. The transmission will not upshift in manual first gear 1 position.

Torque flow is from the input shaft to the rear clutch retainer and front annulus gear (fig. 2C-12). The annulus gear revolves at engine speed and direction of rotation causing the front planetary gears to also rotate at engine speed and direction.

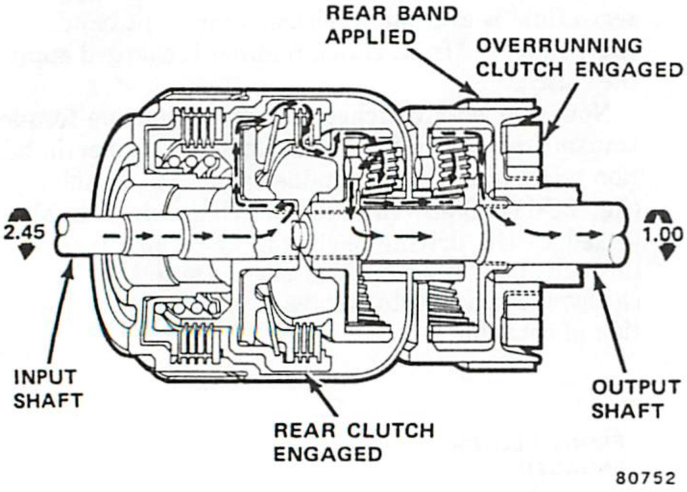

Fig. 2C-12 Torque Flow In Manual First Gear 1 Position

The front planetary carrier, which is splined to the output shaft, is held stationary momentarily. This constition causes the front planetary gears to turn the sun gear and driving shell opposite engine rotation. Sun gear rotation then causes the rear planetary gears to rotate in engine direction. Since the rear planetary carrier is locked to the low/reverse drum, the rear band and overrunning clutch prevent the drum and carrier from rotating opposite engine direction. Rear planetary gear action causes the rear annulus gear to rotate in engine direction. Torque is transferred directly to the output shaft by the annulus gear which is splined to the shaft.

Manual Second Gear 2 Position

Torque flow and transmission elements employed in manual second gear are the same as described for drive-second gear. However, in this position, a 2-3 upshift does not occur. The transmission will perform a 1-2 upshift only. Refer to Drive-Second Gear and figure 2C-12 for a description of torque flow.

Reverse

In Reverse, the front clutch and rear band are applied. Engine torque input flows from the front clutch retainer to the driving shell which is locked to the retainer at all times (fig. 2C-13). Since the driving shell is also splined to the sun gear, it consequently turns the sun gear in engine rotation direction. Sun gear rotation then causes the planet pinions to rotate opposite engine direction.

The rear planetary gear carrier is held stationary by the rear band, as a result, torque is transmitted directly to the output shaft through the rear annulus gear which is splined to the shaft (fig. 2C-13).

In reverse, the front planetary gears are in an idling condition and all torque flows through the rear planetary gears.

HYDRAULIC CONTROL SYSTEM

The hydraulic control system provides fully automatic operation of the transmission. The system performs five basic functions, which are:

- Pressure Supply
- Pressure Regulation
- Flow Control
- Clutch and Band Application
- Lubrication

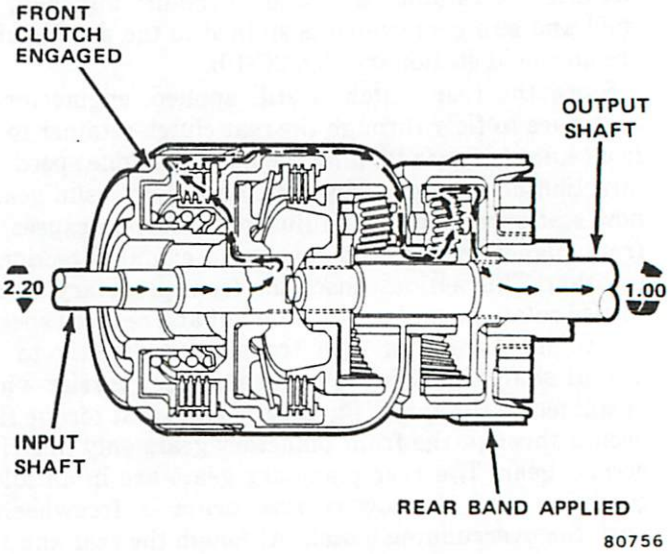

Fig. 2C-13 Torque Flow In Reverse

Pressure Supply System

The single oil pump develops fluid pressure for operation and lubrication. The pump is driven by the engine through the torque converter.

Pressure Regulating System

The pressure regulator valve maintains transmission line pressure, however, the amount of line pressure developed is controlled by governor pressure which is dependent on the degree of throttle opening. The converter control valve maintains both converter operating pressure and transmission lubrication pressure. The pressure regulator and converter control valves are located in the valve body.

The governor valve is operated by the output shaft and controls line pressure and shift speeds. Since the governor is operated by the output shaft, governor pressure increases in almost direct proportion to vehicle speed.

The throttle valve also controls upshift and downshift speeds by regulating pressure in conjunction with throttle position.

Shift Valves

The manual valve is actuated by the gearshift linkage and provides the drive ranges selected by the operator. The 1-2 shift valve provides automatic 1-2 or 2-1 shifts. The 2-3 shift valve provides automatic 2-3 and 3-2 shifts. The kickdown valve provides forced 3-2 or 3-1 downshifts depending on vehicle speed. Downshifts occur when the throttle is opened beyond downshift detent position, which is just before wide open throttle.

The 2-3 shift valve throttle pressure plug provides 3-2 downshifts with varying throttle openings depending on vehicle speed. On 999 models, the 1-2 shift control valve sends 1-2 shift control pressure to the accumulator piston to control front band capacity on 1-2 upshifts and 3-2 downshifts. The limit valve controls the maximum speed at which a 3-2 part throttle downshift can be made.

The shuttle valve has two independent functions. First is fast front band release and smooth front clutch engagement during "lift foot" 2-3 upshifts. Second is to regulate front servo and band application during 3-2 downshifts.

Clutches, Bands, Servos, Accumulator

The front and rear clutch pistons and servo pistons are actuated by line pressure. When line pressure is removed, the pistons are released by spring tension.

On 2-3 upshifts, the front servo piston is released by spring tension and hydraulic pressure. The accumulator controls hydraulic pressure on the apply side of the front servo during 1-2 shifts and serves to cushion front band application at all throttle openings.

GEARSHIFT LEVER POSITIONS

Park (P)

In Park position the transmission output shaft is mechanically locked by the internal parking linkage. The vehicle must be completely stopped before engaging the transmission in Park.

CAUTION: *Internal damage to the transmission could result by shifting the transmission into Park position while the vehicle is moving, or by moving the vehicle with the transmission engaged in Park position.*

Reverse (R)

When shifted to the R position, the reverse gears are engaged providing the reverse direction of movement necessary for backing and parking maneuvers.

Neutral (N)

In Neutral position, forward or reverse movement will not occur. The engine can be started in Neutral as well as Park. However, the transmission is not locked mechanically in Neutral as it is in Park position.

D—Forward Range

The D position provides automatically shifted forward ranges which are: 1-2 and 2-3 upshifts and 3-2 and 3-1 downshifts. The 3-2 and 3-1 downshifts occur at various vehicle speeds depending on throttle opening. Approximate shift speeds for various modes of operation are shown in the Automatic Shift Speed and Governor Pressure Chart.

For extra acceleration in D position third gear, above approximately 30 mph (48 km/h) and below approximately 70 mph (113 km/h), completely depress the accelerator. This forces a 3-2 downshift. The transmission will remain in second gear until full throttle automatic upshift speed is attained or the accelerator pedal is released. If the accelerator pedal completely depressed while in third gear below approximately 30 mph (48 km/h), a 3-1 downshift should occur. Upshifts to second and third gears occur at full throttle automatic upshift speeds or when the accelerator pedal is released.

2—Forward Range

The 2 position provides automatic 1-2 and 2-1 shifts. Automatic 1-2 upshift speeds in 2 position are the same as for D position except that 2-3 upshifts should not occur.

If the gearshift lever is moved from D to 2 position while in D third gear, the transmission will downshift to second gear and remain in that gear until the gearshift lever is moved back to D position.

1—Forward Range

The 1 position permits no automatic upshifts. If 1 position is selected initially, the transmission will remain in first gear until the gearshift lever is moved to another range.

If the gearshift lever is moved from D or 2 to 1 while the vehicle is in second gear at a speed below the full throttle 1-2 upshift point, the transmission will downshift to first gear. If vehicle speed is above 1-2 full throttle shift point, the transmission will remain in second gear until speed is reduced to the 1-2 full throttle shift point.

If the gearshift lever is moved from D to 1 position at speeds below appproximately 30 mph (48 km/h), the transmission will downshift to first gear.

PERIODIC MAINTENANCE

For normal operation, the automatic transmission should be serviced every 27.5 months or 27,500 miles (44 000 km). Service should include changing the transmission fluid and filter and if necessary, adjusting the band. For heavy-duty operation such as trailer towing, the transmission fluid and filter should be changed and the bands adjusted, if necessary, at 12.5 months or 12,500 mile (20 000 km) intervals.

TOWING

Emergency Towing

If the vehicle is to be towed with the front or rear wheels raised, towing speed must be limited to 30 mph (48 km/h) and the vehicle towed for a distance no greater than 15 miles (24 km).

Manual Transmission with Model 208 and Model 300 Transfer Case

Ignition Key Available: Shift transmission and transfer case into Neutral. Vehicle can now be towed with all four wheels on the ground or with front or rear wheels raised. Turn selective drive hubs to the 4 x 4/LOCK position. Turn ignition key to Off position to unlock steering.

Ignition Key Not Available and Vehicle is Unlocked: Shift transmission and transfer case into Neutral and tow vehicle with front wheels raised.

Ignition Key Not Available and Vehicle is Locked: Place dolly under rear wheels and tow vehicle with front end raised. Or, disconnect rear propeller shaft at rear axle yoke (be sure to mark the prop shaft and yoke for proper alignment at reassembly), secure shaft to underside of vehicle and tow with front end raised.

Automatic Transmission with Model 208 and Model 300 Transfer Case

Ignition Key Available: Turn ignition key to Off position to unlock steering column and gearshift selector linkage. Move gearshift lever to Park and transfer case shift lever to Neutral.

Ignition Key Not Available: Place dolly under rear wheels and tow vehicle with front end raised. Or, disconnect rear propeller shaft at rear axle yoke (index mark for correct assembly later), secure shaft to underside of vehicle and tow with front wheels raised.

Automatic Transmission with Quadra-Trac®

Ignition Key Available: Vehicle can be towed with all four wheels on the ground without disconnecting propeller shafts. Turn ignition key to Off position to unlock steering wheel. Move gearshift lever to Park and shift transfer case shift lever to Neutral position.

Recreational Towing

Jeep vehicle can be towed behind a recreational vehicle such as a motor home, however, the following instructions must be followed explicitly in order to avoid damaging drive line components. In addition, be sure to check and comply with federal, state and local requirements/ordinances regarding vehicle lighting, tow bars and trailer hitches.

With Manual Transmission and Model 208 or Model 300 Transfer Case

(1) Turn ignition switch to Off position to unlock steering wheel.

(2) Shift transmission into gear and the transfer case into Neutral.

(3) Turn front drive hubs to 4 x 4 or LOCK position, for axle lubrication.

With Automatic Transmission and Model 208 or Model 300 Transfer Case

(1) Turn ignition switch to Off position to unlock steering wheel.

(2) Shift automatic transmission into Park.

(3) Shift Transfer Case into Neutral position.

(4) Turn front drive hubs to 4 x 4 or LOCK position for axle lubrication.

With Automatic Transmission and Quadra-Trac®

(1) Turn ignition switch to Off position to unlock steering wheel.

(2) Shift automatic transmission into Park.

(3) Shift Transfer Case into Neutral position.

DIAGNOSIS AND TEST PROCEDURES

GENERAL

Automatic transmission malfunctions are usually the result of poor engine performance, incorrect fluid level, incorrect linkage, band or hydraulic control pressure adjustments, hydraulic system malfunctions or mechanical component malfunctions.

In all automatic transmission repair, the logical and proper procedure is diagnosis before disassembly. A systematic diagnosis procedure is important in avoiding repair delays caused by incorrect or unnecessary repairs. The diagnosis and test procedures outlined in this section should be performed in the following sequence to realize maximum effect: (1) preliminary diagnosis, (2) road test, (3) hydraulic pressure test, (4) air pressure test, (5) stall test, (6) analyze test results and consult diagnosis guides and charts for cause of malfunction.

PRELIMINARY DIAGNOSIS

Two basic procedures are required. One procedure for vehicles that are driveable and an alternate procedure for vehicles that will not back up or move forward.

Vehicle Is Driveable

(1) Check fluid level and condition.

(2) Adjust throttle and gearshift linkage before road testing if complaint was based on delayed, erratic, or harsh shifts.

(3) Perform stall test if complaint was based on sluggish, low-speed acceleration or abnormal throttle opening requirements to maintain highway speeds with engine in good tune.

(4) Road test vehicle and analyze results.

(5) Perform hydraulic pressure tests.

(6) Perform air pressure test to check clutch and band operation.

Vehicle Will Not Back Up or Move Forward

(1) Check fluid level and condition.

(2) Check for broken or disconnected throttle linkage.

(3) Check for broken cooler lines and loose or missing pressure port plugs.

(4) Raise vehicle, start engine, shift transmission into gear and note following:

(a) If propeller shafts turn but wheels do not, problem is in differential or axle shafts.

(b) If propeller shafts do not turn and transmission is noisy, stop engine, remove oil pan, and check for debris. If debris is not found, remove transmission and check for broken drive plate or drive plate-to-converter bolts, broken converter hub, broken input or output shaft or broken oil pump.

(c) If propeller shafts do not turn and transmission is not noisy, perform hydraulic pressure test to determine if problem is malfunction of hydraulic or mechanical component.

FLUID LEVEL AND CONDITION

Check fluid level and condition as follows:

(1) Drive vehicle until transmission fluid is at normal operating temperature of approximately 175°F (79.4°C).

NOTE: *To avoid false readings, which could result in an over or under-fill condition, do not check the fluid level until the fluid is at operating temperature.*

(2) Shift transmission into Neutral.

NOTE: *The transmission fluid level is checked in Neutral because the converter fills more rapidly in this position.*

(3) Apply parking brake.

(4) Operate engine at idle speed.

(5) Wipe dirt from filler cap and tube before removing dipstick.

WARNING: *Be sure to keep hands or loose articles of clothing away from the fan, accessory drive belts, or other rotating engine parts. Contact with these components or hot engine components can result in personal injury.*

(6) Remove dipstick and check fluid level. Fluid level is correct when between ADD ONE PINT and FULL marks on dipstick.

(7) Add or drain fluid as necessary to bring fluid to correct level. If level was low, check transmission for leaks.

(8) Check condition of fluid.

(a) Fluid should be dark red in color and free of dirt or debris.

(b) If fluid is discolored or smells burnt, but transmission operation is OK, fluid and filter should be replaced.

(c) If fluid is badly discolored, smells burnt, contains metal or frictional material particles and transmission problems were experienced, transmission may require overhaul.

A low fluid level allows the pump to take in air along with the fluid. As in any hydraulic system, aerated fluid will cause hydraulic pressures to be low and develop slower than normal.

If the transmission is overfilled, the gears churn the fluid into foam aerating the fluid and causing the same conditions that occur with a low fluid level. In either case, air bubbles cause fluid overheating, oxidation and varnish buildup which interferes with valve, clutch and servo operation. Foaming can also result in fluid escaping from the transmission vent where it may be mistaken for a leak.

Along with fluid level, it is also important to check fluid condition. When the fluid is dark, smells burnt or is contaminated with metal or frictional material particles, an overhaul may be necessary. Examine the fluid on the dipstick closely. If there is any doubt about its condition, drain out a sample for further inspection.

After checking fluid level and condition, seat the dipstick fully to seal out water and dirt.

NOTE: *After completing any repairs that required draining the transmission fluid, add 8 pints (4.5 liters) of Jeep, Dexron, or equivalent automatic transmission fluid to the transmission before starting the engine.*

FLUSHING OIL COOLER AND COOLER LINES

If a transmission or lockup clutch failure has contaminated the fluid, the oil cooler(s) should be reverse flushed to insure that metal particles or sludged oil are not later transferred back into the reconditioned transmission.

(1) Disconnect both cooler lines at radiator.

(2) Dislodge any foreign material at inlet side of cooler with small screwdriver.

(3) Reverse flush cooler with combination of mineral spirits and pulsating air under pressure (shop air).

(4) Treat cooler lines separately and insure they are clear by flowing mineral spirits or automatic transmission fluid through them.

(5) Remove leftover mineral spirits from cooler and cooler lines by flowing automatic transmission fluid through them.

(6) Cooler flow should now be checked by connecting cooler tubes and placing rear cooler tube into 1 quart container. Overfill transmission by 1 quart. Watching a clock, start engine (run at curb idle) and run in neutral for exactly 20 seconds. If cooler flow is less than 1 quart in 20 seconds, replace radiator or have radiator bottom cooler professionally reconditioned.

THROTTLE LINKAGE

The throttle linkage adjustment is important to proper operation. This adjustment positions a valve which controls shift speed, shift quality, and part throttle downshift sensitivity. If the setting is too short, early shifts and slippage between shifts may occur. If the linkage setting is too long, shifts may be delayed and part throttle downshifts may be very sensitive.

This adjustment is so critical that the use of a throttle lever holding spring is necessary to remove slack in the linkage during adjustment. Refer to Throttle Linkage Adjustment in In-Vehicle Service and Adjustment.

GEARSHIFT LINKAGE

The gearshift linkage adjustment is important because the linkage positions the manual valve in the valve body. Incorrect adjustment will result in creeping in Neutral, premature clutch wear, delayed engagement in any gear or a no-start in Park or Neutral condition.

Proper operation of the neutral start switch will provide a quick check of linkage adjustment as follows:

(1) Insert key in ignition lock and turn lock to On position to unlock column and gearshift lever.

(2) Move gearshift lever slowly upward until it clicks into Park detent in shift selector gate.

(3) Turn ignition lock cylinder to Start position and start engine. If starter operates, Park position is correct.

(4) Stop engine.

(5) Move gearshift lever slowly toward Neutral until lever engages in edge of Neutral detent in shift selector gate.

(6) Turn ignition lock cylinder to Start position and start engine. If starter operates, Neutral position is correct and linkage is properly adjusted.

(7) If starter failed to operate in Park or Neutral, or if gearshift lever had to be moved back and forth to achieve start in either position, linkage adjustment is required. Refer to Gearshift Linkage Adjustment in In-Vehicle Service and Adjustment section.

ROAD TEST

Before road testing, be sure fluid level, throttle and gearshift linkage adjustments have been checked and corrected if necessary.

Observe engine performance during the test. An engine malfunction will have an adverse effect on transmission operation. In addition, operate the transmission in all gearshift positions to check for slippage and shift variations. Note whether the shifts are harsh or spongy, and check the speeds at which upshifts and downshifts occur.

Watch closely for slippage or engine speed flare-up which usually indicates clutch, band or overrunning clutch problems. If the condition is advanced, an overhaul may be necessary to restore normal operation.

In most cases, a slipping clutch or band can be determined by noting transmission operation in all gearshift lever positions and by comparing which internal units are applied in those positions. The Clutch and Band Application Chart provides a basis for analyzing road test results.

Clutch and Band Application Chart

Drive Elements	Gearshift Lever Position								
	P	R	N	D			2		1
				1	2	3	1	2	
Front Clutch		●				●			
Front Band					●			●	
Rear Clutch				●	●	●	●	●	●
Rear Band		●							●
Overrunning Clutch				●			●		●

60230

Analyzing the Road Test

Refer to the Clutch and Band Application Chart and note which elements are in use in the various gear ranges. The rear clutch is applied in all forward ranges (D, 2, 1). The overrunning clutch is applied in first gear D and 2 range only and the front band is applied in 1 and R range only.

For example, if slippage occurs in D and 2 range first gear but not in 1 range, the overrunning clutch is slipping. Similarly, if slippage occurs in any two forward gears, the rear clutch is slipping.

Applying the same method of analysis, note that both clutches are applied in D third gear only. If the transmission slips in third gear, either the front clutch or the rear clutch is slipping. By selecting another gear which does not use one of these units, the slipping clutch can be determined. For example, if the transmission also slips in reverse, the front clutch is slipping. If the transmission does not slip in reverse, the rear clutch is slipping.

This process of elimination can be used to determine the slipping unit and to check operation. The key is proper use of the Clutch and Band Application Chart.

Although road test analysis will help determine the slipping unit, the actual cause of a malfunction usually cannot be ascertained until hydraulic and air pressure tests are performed. Practically any condition can be caused by leaking hydraulic circuits or sticking valves.

Unless the condition is obvious, such as no drive in D range first gear only, do not disassemble the transmission until hydraulic and air pressure tests have been performed.

HYDRAULIC PRESSURE TESTS

The hydraulic pressure tests are performed using Test Set J-24027. The set consists of five color-coded pressure hoses, a 400 psi (2 758 kPa) capacity pressure gauge and a 100 psi (689 kPa) capacity pressure gauge (fig. 2C-14). The high pressure gauge is used to record rear servo pressure on R and 1 positions only and the low pressure gauge is used for all other readings. The test set permits simultaneous connection to all the pressure ports and allows sequential or independent pressure readings as desired.

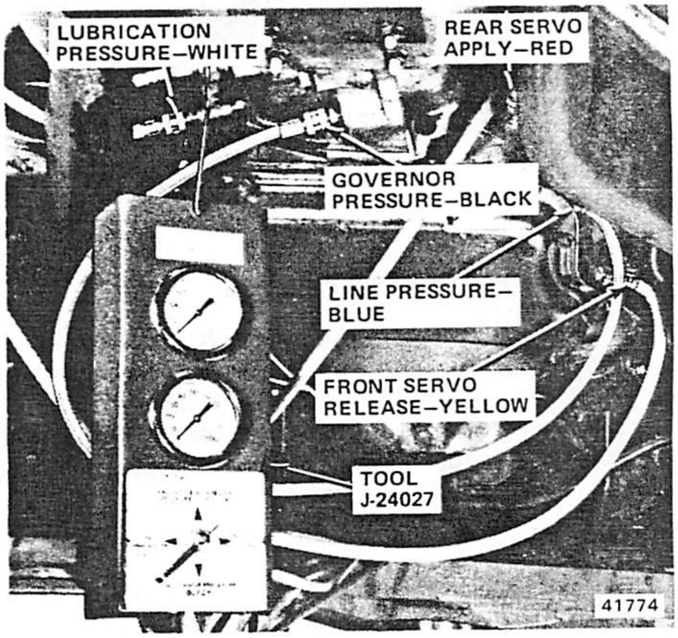

Fig. 2C-14 Pressure Test Set

Pressure Test Port Location

The accumulator line pressure port is located on the right side of the case between the front and rear servo castings just above the oil pan mating surface (fig. 2C-15).

The governor pressure port faces to the left side in the front lower center section of the adaptor housing (fig. 2C-16).

Lubrication pressure is measured by installing a T-fitting in the fluid cooler return line on the left side at the rear edge of the case halfway to the top of the case (fig. 2C-16). If inaccessible, use T-fitting at radiator cooler return line.

The front servo release pressure port is located on the right side of the case just behind the filler tube opening just above the oil pan mating surface (fig. 2C-15).

The rear servo apply pressure port is on the right rear side of the case, facing rearward and just above the oil pan mating surface (fig. 2C-16).

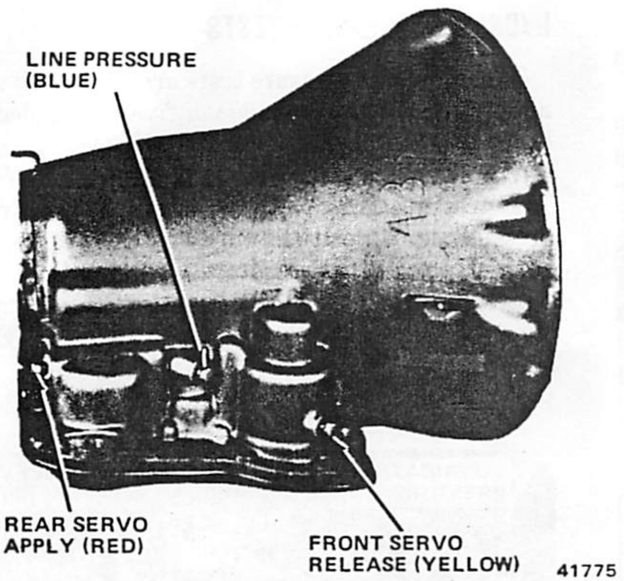

Fig. 2C-15 Pressure Port Locations

Hydraulic Pressure Test Procedure

Before the test, check and correct fluid level and control linkage adjustments, and connect a tachometer to the engine. Raise the vehicle on a hoist that will allow the wheels to rotate freely and connect the test gauge hoses to the appropriate transmission pressure ports.

Test One

This test checks pump output, pressure regulator valve operation, front/rear clutch and oil filter condition by measuring transmission operating pressure at the accumulator and front servo pressure ports in range.

(1) Turn test gauge selector handle to line pressure position.

(2) Start and operate engine at idle speed, move gearshift lever to D range and note line pressure.

(3) At idle, pressure should be 54 to 60 psi (372 to 414 kPa).

(4) Increase engine rpm to 1600 and slowly move valve body throttle lever fully forward then fully rearward. With throttle lever in forward position, pressure should be 54 to 60 psi (372 to 414 kPa) and gradually increase to 94 psi (648 kPa) when lever is moved rearward.

(5) Turn test gauge selector handle to front servo apply position.

(6) Operate engine at 1000 rpm, allow transmission to upshift into third gear, and note servo pressure. Pressure should not vary from previously noted line pressure by more than 3 psi (21 kPa).

(7) Slowly move throttle linkage to full throttle position and note servo pressures just prior to and after transmission downshifts. Servo pressure should increase then drop to 0 psi after downshift.

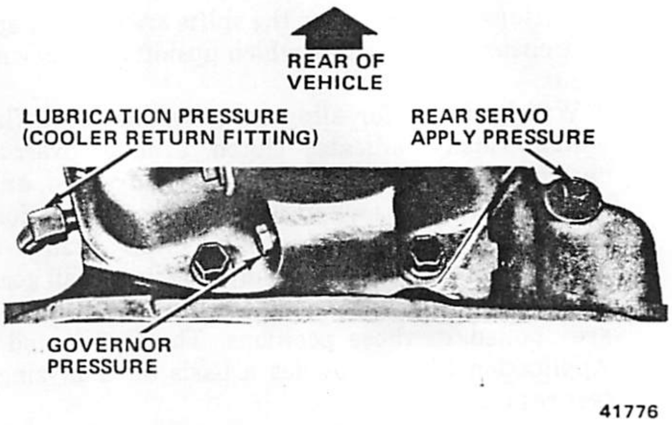

Fig. 2C-16 Pressure Port Locations

Test Two

This test checks pump output, pressure regulation, and front clutch/rear servo condition by measuring and comparing operating pressures at the rear servo and accumulator pressure ports in gear ranges 1 and 2.

(1) Turn test gauge selector handle to line pressure position.

(2) Move gearshift lever to 1 range, operate engine at 1000 rpm, and slowly move valve body throttle lever fully forward then fully rearward. With lever in forward position, pressure should be 54 to 60 psi (372 to 414 kPa) and gradually increase to 90 to 96 psi (621 to 662 kPa) as lever is moved rearward.

(3) Turn test gauge selector handle to rear servo apply position.

(4) Operate engine at 1000 rpm. Slowly move valve body throttle lever fully forward then fully rearward. Compare pressure registered at servo with line pressure recorded at accumulator port. Servo pressure should not vary from line pressure by more than 3 psi (21 kPa).

(5) Turn test gauge selector handle to line pressure position.

(6) Place gearshift lever in 2 range and operate engine at 1000 rpm.

(7) Slowly move valve body throttle lever fully forward then fully rearward and note pressures. With lever in forward position, pressure should be 54 to 60 psi (372 to 414 kPa) and gradually increase to 90 to 96 psi (621 to 662 kPa) as lever is moved rearward.

Test Three

This test checks pump output, pressure regulation, and front clutch/rear servo condition by measuring and comparing operating pressure at the rear servo pressure port in Reverse.

NOTE: *For this test, only the high pressure gauge in the test set is used. Since the gauge hose is connected directly to the rear servo, it is not necessary to move the test gauge selector handle to any specific position.*

(1) Operate engine at idle speed, move gearshift lever to Reverse, and note reading on high pressure gauge. Pressure should be approximately 160 psi (1 103 kPa) at idle.

(2) Slowly increase engine speed to 1600 rpm and note reading at high pressure gauge again. As engine speed is increased, pressure should also increase to approximately 270 psi (1 862 kPa).

(3) Operate engine at idle speed, move gearshift lever from Reverse to Drive, and note reading at high pressure gauge. Pressure should drop to 0 psi when gearshift lever is moved to Drive. This test checks for leakage into rear servo which can cause rear band burnout.

Test Four

This test checks governor operation by measuring governor pressure response to changes in engine speed. It is usually not necessary to check governor operation unless shift speeds are incorrect or if the transmission will not downshift.

(1) Turn test gauge selector handle to governor pressure position.

(2) Move gearshift lever to D range, operate engine at idle speed, and note pressure. Pressure should be 0 to 1-1/2 psi (10 kPa) maximum. If pressure exceeds maximum, governor valve or weights are sticking open.

(3) Slowly increase engine speed and observe speedometer and test gauge pressure. Governor pressure should increase in proportion to vehicle speed (approximately 1 psi per 1 mph). Pressure rise should be smooth and drop back to 0 to 1-1/2 psi (10 kPa) when throttle is closed.

Test Five

This test checks lubrication pressure which is measured by connecting the white test gauge hose to a T-fitting that has been inserted in the left-side cooler line. This test is especially important when the transmission is noisy, or unexplained rear clutch failure has occurred, or when fluid is forced out the fill tube and fluid level was known to be correct.

(1) Install T-fitting in transmission cooler line.

(2) Connect white test gauge hose to T-fitting and turn test gauge selector handle to lubrication pressure position.

(3) Start and operate engine at idle speed, move gearshift lever to D range, and note pressure.

(4) Pressure at idle speed should be 5 to 15 psi (35 to 103 kPa).

(5) Increase engine speed to 1000 rpm and slowly move valve body throttle lever fully forward and then fully rearward. With lever forward, pressure should be 5 to 15 psi (35 to 103 kPa) 10 to 30 psi (68 to 207 kPa) with lever rearward.

AIR PRESSURE TEST

Air pressure testing is used as a diagnostic tool before transmission removal and also as a method of confirming proper clutch, band and servo operation after repair. The tests involve substituting air pressure for fluid pressure by applying air pressure to the appropriate case passages after the valve body has been removed (fig. 2C-17).

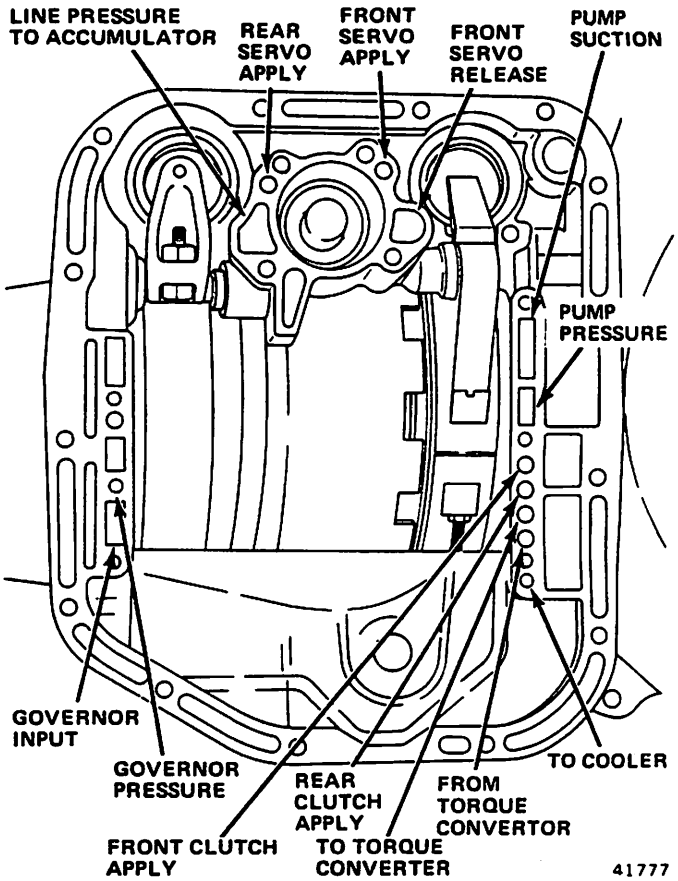

Fig. 2C-17 Transmission Case Channels

CAUTION: *Use dry, filtered compressed air only when performing air pressure tests. Pressures of 30 to 100 psi (207 to 689 kPa) are required to perform the tests.*

Front Clutch Test

Place one or two fingers on the clutch housing and apply air pressure to the front clutch apply passage. Movement of the piston can be felt and a soft thud may be heard as the clutch applies. While air pressure is applied, check for excessive air leakage.

Rear Clutch Test

Place one or two fingers on the clutch housing and apply air pressure to the rear clutch apply passage. Movement of the piston can be felt and a soft thud may be heard as the clutch applies. While air pressure is applied, check for excessive or unusual air leakage.

Front Servo Test

Apply air pressure to the front servo apply passage. The servo rod should extend and cause the band to tighten around the drum. While are pressure is applied, check for excessive air leakage. Spring tension should release the servo when air pressure is removed.

Rear Servo Test

Apply air pressure to the rear servo apply passage. The servo rod should extend and cause the band to tighten around the drum. While air pressure is applied, check for excessive air leakage. Spring tension should release the servo when air pressure is removed.

CONVERTER HOUSING FLUID LEAK DIAGNOSIS

When diagnosing converter housing fluid leaks, two facts must be established before attempting repair. First, it must be verified that a leak condition does actually exist and second, the real source of the leak must be determined. Failure to establish these facts beforehand can result in incorrect or unnecessary repairs.

In some cases, suspected converter housing fluid leaks may not be leaks at all. They may be the result of residual fluid in the converter housing or excess fluid spilled during factory filling or initial transmission operation. These conditions may be incorrectly diagnosed as fluid leaks.

Converter housing area leaks may have several sources. Through careful observation, it is possible to pinpoint the leak source before removing the transmission. The paths various types of fluid leaks follow are shown in figure 2C-18 and are described below.

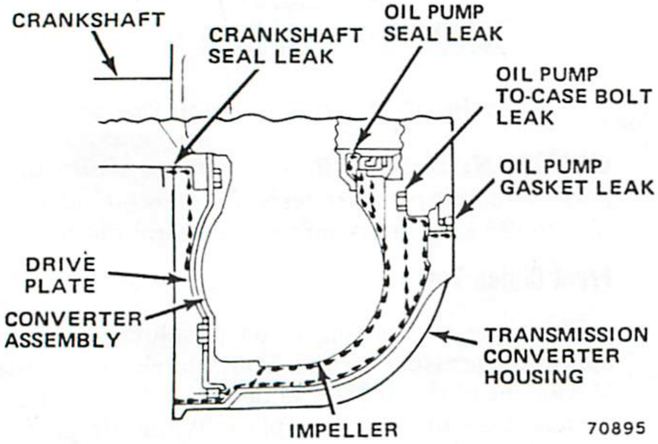

Fig. 2C-18 Converter Housing Fluid Leak Diagram

- Oil Pump Seal—leaks past the seal lip tend to move along the drive hub and onto the rear of the converter housing. However, if total seal failure occurs, fluid will be deposited inside the converter housing only, near the outside diameter of the housing.
- Oil Pump Body—leaks past the pump body follow the same path as an oil pump seal leak or fluid may travel down the pump face into the converter housing.
- Oil Pump-to-Case Bolt—leaks past any one of these bolts are deposited on the inside of the converter housing only and not on the converter itself.
- Oil Pump-to-Case Gasket—leaks past the gasket are deposited inside the converter housing only.
- Front Band Lever Pin Plug—leaks past the plug threads are deposited inside the housing and not on the converter.

Leak Diagnosis Procedure

(1) Check fluid level and condition. If fluid level is high or low, adjust to proper level.

(2) Raise and support vehicle.

(3) Inspect transmission and correct any external leaks from oil pan gasket, filler tube, governor line to TCS switch, if equipped, cooler line fittings, pressure test port plugs and case-to-adaptor housing gasket.

(4) Remove converter housing spacer plate.

(5) Wipe all fluid from converter housing area.

(6) Operate engine at 2000 rpm for 2 minutes and observe converter housing for fluid accumulation pattern.

(7) If fluid accumulation pattern is not evident, proceed to next step.

(8) If a circular pattern develops, it indicates a defective or damaged torque converter. Correct leak by replacing converter.

(9) If a trickle develops, it indicates an oil pump leak caused by one or more of the following conditions:

- Pump drainback hole obstructed.
- Pump housing vent obstructed.
- Pump bushing or converter hub scored, nicked, pitted or burred.
- Defective oil pump O-ring, gasket, or seal.
- Front band lever pin plug loose or plug threads in case are stripped.

(10) Correct these conditions as outlined in following steps.

(a) Remove transmission and converter.

(b) Tighten front band adjusting screw until band is tight around front clutch retainer. This will prevent front clutch assembly from also coming out when oil pump is removed and prevent damaging clutch discs.

(c) Remove oil pump and oil seal.

(d) Inspect pump housing drainback and vent holes for obstructions. If drainback hole cannot be opened using thin wire, replace pump housing. Check vent hole by blowing solvent through vent. If vent cannot be opened, replace pump housing.

(e) Inspect condition of pump housing and converter hub. If bushing is scored, replace it and polish hub using fine sandpaper.

(f) Install replacement oil pump seal, O-ring, gasket and oil pump.

(g) Loosen kickdown lever pin plug two turns.

(h) Apply small quantity of No. 2 Permatex, or equivalent sealer, to plug threads and tighten plug to 150 inch-pounds (17 N•m) torque.

(i) Adjust front band.

(11) Install transmission and converter.

(12) Install converter housing spacer plate.

(13) Remove supports and lower vehicle.

GOVERNOR

Governor operational problems should be diagnosed using the road test and hydraulic pressure test procedures.

STALL TEST

Stall testing determines the maximum engine rpm obtainable at full throttle with the rear wheels locked and the transmission in Drive. Stall testing also checks the holding ability of the converter-stator overrunning clutch and both transmission clutches. When stall testing is completed, refer to the Stall Speed Specifications Chart and diagnosis guides.

WARNING: *Never allow anyone to stand in front of the vehicle when performing a stall test. In addition, always block the front wheels and have the parking and service brakes fully applied during the test.*

(1) Connect tachometer to engine.

(2) Check and adjust transmission fluid level as necessary.

(3) Start and operate engine until transmission fluid reaches operating temperature.

(4) Block front wheels.

(5) Fully apply parking brakes.

(6) Fully apply service brakes.

(7) Open throttle completely and record maximum engine rpm registered on tachometer.

CAUTION: *Do not hold the throttle open any longer than necessary and never longer than five seconds at a time. If more than one stall test is required, operate the engine at 1000 rpm with the transmission in Neutral for at least 20 seconds to cool the transmission fluid.*

(8) If engine speed exceeds maximum shown in stall speed chart, release accelerator immediately. This indicates that transmission clutch slippage is occurring.

(9) Shift transmission into Neutral, operate engine for 20 seconds, stop engine, shift transmission into Park, and release brake.

(10) Compare test results with stall speed chart and refer to stall test diagnosis.

Stall Test Diagnosis

Stall Speed Too High

If stall speed exceeds specifications by more than 200 rpm, transmission clutch slippage is indicated.

Stall Speed Too Low

Low stall speeds with a properly tuned engine indicate a torque converter stator clutch problem. The condition should be confirmed by road testing prior to converter replacement. If stall speeds are 250-350 rpm below the minimum specified in the chart, and the vehicle operates properly at highway speeds but has poor low speed acceleration, the stator overrunning clutch is slipping and the torque converter should be replaced.

Stall Speed Normal

If stall speeds are normal but road testing shows that abnormally high throttle opening is required to maintain highway speeds even though low speed acceleration is normal, the stator overrunning clutch is seized and the torque converter must be replaced.

Noise

A whining or siren-like noise caused by fluid flow is normal during a stall test. Loud metallic noises from loose internal parts or interference within the assembly indicates a defective torque converter. To confirm that a noise is originating from within the converter, operate the vehicle at light throttle in Drive and Neutral on a hoist and listen for noise coming from the torque converter housing.

When the stall test is completed, compare the test speeds recorded with those listed in the Stall Speed Specifications Chart.

Stall Speed Specifications Chart

Transmission Model	Engine RPM
258-999	1850-2150
258-727	1950-2250
300-727	1700-2000

60232

SERVICE DIAGNOSIS

General

The diagnosis charts provide a quick reference for transmission diagnosis. A step-by-step approach to diagnosing and correcting transmission malfunctions is used.

The In-Vehicle Procedures chart lists problem conditions that can be corrected with the transmission in the vehicle. The Out-Of-Vehicle Procedures chart lists problems that require transmission removal and disassembly.

The In-Vehicle Procedures should always be performed first. Do not remove the transmission unless the In-Vehicle Procedures fail to correct the problem.

How to Use the Charts

The *Condition* columns in each chart describes the most frequently encountered malfunctions. Each problem condition is cross-referenced to the necessary service procedures.

The code letters in the boxes at the top of each chart identify the individual service procedures. These code letters correspond to descriptions of the various procedures, which appear on the pages immediately following the charts.

Capital letters A through T denote In-Vehicle Procedures. Lower case letters a through j denote Out-Of-Vehicle Procedures.

The numbers in the boxes adjacent to the *Condition* column cross-reference each problem *condition* to the necessary service procedures. These numbers also show the order in which the various service procedures should be performed.

As an example, assume that the problem condition is Harsh Engagement in R-D-2-1. First, locate the problem

Service Diagnosis

OUT OF VEHICLE PROCEDURES

CONDITIONS	a	b	c	d	e	f	g	h	i	j
HARSH ENGAGEMENT R, D, 2, 1				1	2					
SLOW TO ENGAGE N, R, D, 2, 1		1		2	3					4
NO UPSHIFT, STUCK IN LOW GEAR		1		2						
DELAYED, ERRATIC SHIFTS (HARSH AT TIMES)		1								
SLIPS IN FORWARD DRIVE RANGES		1		2	3		4			5
SLIPS IN REVERSE ONLY		1		2			3			
SLIPS IN LOW GEAR "D" ONLY BUT NOT IN "1" POSITION								1		
WILL NOT MOVE IN FORWARD OR REVERSE	1	2				3				
REVERSE OK, WILL NOT MOVE FORWARD IN D, 2, 1					1					
NO REVERSE				1			2			
MOVES IN NEUTRAL POSITION (CREEPS IN "N")					1					
DRAGS OR LOCKS UP				1	2	3	4	5		
GROWLING, GRATING OR SCRAPING NOISES	1	2		3		4		5	6	
BUZZING NOISE		1							2	
OIL BLOWS OUT FILLER TUBE		1	2							
OVERHEATS	1									
SLUGGISH ACCELERATION, EXCESSIVE THROTTLE NEEDED TO MAINTAIN SPEED					2				1	

80086B

description in the *Condition* column; then note which service procedures are indicated. As shown in the chart, procedures B, D, E, G, N, Q are required. Next, note the numbers which indicate the sequence in which these procedures are to be performed. In this case, the correct order will be D, B, E, G, Q, N. Finally, refer to the service procedure descriptions, which appear on the pages immediately following the charts, for details of each procedure.

Become familiar with both charts and the procedures required. Some conditions require in-vehicle service only, others require out-of-vehicle service only, and some require a combination of both.

In-Vehicle Procedures

A—Fluid Level and Condition: Fluid should be at full mark with engine idling. Fluid should not be milky, full of bubbles, or dark and burnt smelling. Use AMC, Dexron, or equivalent, transmission fluid only.

B—Throttle Linkage: Check for smooth travel. Clean, but do not lube, linkage pivot points as necessary, then adjust to specifications.

C—Gearshift Linkage: Adjust to specifications.

D—Engine Idle Adjustment: Set to specifications.

E—Hydraulic Pressures: Perform hydraulic pressure test to determine if operating pressures are within specifications. Repair hydraulic components as necessary. Check and correct throttle and line pressure settings if required.

F—Front Band: Adjust to specifications.

G—Rear Band: Adjust to specifications.

H—Neutral Start Switch: Check wires and connections. Test switch. See if valve body manual lever grounds switch in P and N positions. If not OK, check ground strip at valve body manual lever. If OK, check starting circuit.

I—Park Lock: Check condition of lock rod, lock rod ball, sprag reaction plug, governor support and sprag shaft. Replace parts as required.

J—Transmission Oil Cooler: Check lines and cooler for obstructions or leaks (look for transmission fluid in radiator coolant or milky colored transmission fluid which indicates coolant in fluid).

K—Output Shaft Bearing, Bushing or Seal: Remove extension housing, inspect parts, and replace parts as necessary.

L—Governor Valve: Clean and inspect all parts. Check weights, shaft and valve for burrs, nicks, scores or binding. Check spring for collapsed or distorted coils and snap rings for distortion. Check filter for dirt and debris. Inspect body for cracks or warpage. Check torque on governor and output shaft support bolts.

M—Oil Filter: Inspect and replace if clogged.

N—Valve Body: Remove, disassemble, clean thoroughly, and inspect valves and plugs for nicks, scratches, burrs, and rounded edges on valve lands. Check bores for scratches, springs for collapsed coils, and all mating surfaces for nicks, burrs or warpage. Reassemble and install, tightening all screws to exact specifications.

O—Front Servo and Linkage: Inspect piston for wear, cracks, and worn or broken seal rings. Check springs for collapsed or broken coils. Check servo bore for scratches, nicks or wear. Check lever, strut, and band for damage. Check lever shaft for wear, being loose in case, or for leaking O-ring.

P—Rear Servo and Linkage: Inspect piston for wear, cracks, worn or broken seal ring or damaged seal. Check springs for collapsed or broken coils. Check servo bore for scratches, nicks or wear. Check lever and band for damage. Check lever shaft for wear or being loose in case.

Q—Accumulator: Clean and inspect for broken seal rings, scratched bore, broken or collapsed spring. Check piston for cracks or evidence of piston cocking in bore.

R—Air Pressure Test: Remove valve body and use air pressure to apply clutches and bands to check operation.

S—Engine Tune and Performance: Verify proper engine operation. Be sure compression meets specifications and fuel and ignition systems are functioning properly.

T—Stall Test: Perform stall test to check holding ability of converter and transmission clutches.

Out-Of-Vehicle Procedures

a—Converter Drive Plate: Check plate for flatness, cracks at mounting bolt holes, loose attaching bolts or damaged ring gear teeth. Broken drive plate may indicate engine-to-transmission caused by loose, missing or misaligned dowels.

b—Oil Pump: Clean pump and check all clearances. Inspect rotors for scoring and the seal and bushings for wear. Inspect pump housing and reaction shaft support mating surfaces for flatness.

c—Transmission Vent: Make sure vent is open and not obstructed.

d—Front Clutch: Clean and inspect all parts. Examine retainer and piston for scores and scratches, discs and plates for wear, return springs for collapsed coils, and the seal rings for damage. The vent check ball in the retainer must operate freely.

e—Rear Clutch: Inspect all rear clutch parts as outlined under front clutch procedure.

f—Planetary Gear Set: Clean and inspect annulus gear, planet pinion carrier assembly, and sun gear for worn thrust washers, damaged gear teeth, and excessive pinion end clearance. Examine the bushings in the sun gear for excessive wear.

g—Rear Band: Inspect the band for wear and for good bond of lining to band. Inspect lining for burn marks, glazing, uneven wear patterns, flaking, or if band grooves are worn away at any portion of band. Replace band if it exhibits any of these conditions.

h—Overrunning Clutch: Clean and inspect clutch parts for brinnelled clutch rollers or cam, or improperly assembled rollers or springs. Check for collapsed springs and bent spring retainer tabs.

i—Torque Converter: If the converter hub seal surface or drive slots are damaged or if the converter contains foreign material, burnt-oxidized fluid or debris, replace the converter. Do not attempt to clean or flush the converter.

j—Seal Rings: Inspect seal rings on reaction shaft support and governor support for wear, cracks or breakage. Inspect ring grooves on both support assemblies for nicks, burrs or distortion. Inspect bores in front clutch retainer and output shaft support for nicks, grooves, wear, cracks or scratches.

Service Diagnosis

IN VEHICLE PROCEDURES

CONDITIONS	A	B	C	D	E	F	G	H	I	J	K	L	M	N	O	P	Q	R	S	T
HARSH ENGAGEMENT R, D, 2, 1		2		1	3		4							6			5			
SLOW TO ENGAGE N, R, D, 2, 1	1		2	3	4		6						5	9			8	7		
NO UPSHIFT, STUCK IN LOW GEAR	1	2	3		4	7						5		6	8			9		
NO LOW GEAR MOVES IN 2ND or 3RD GEAR												1		2						
NO KICKDOWN OR NORMAL DOWNSHIFT	1	2	3		5	4						6		7	8			9		
DELAYED ERRATIC SHIFTS (HARSH AT TIMES)	1	2	3		4	5						6	7	8	9	10				
SLIPS IN FORWARD DRIVE RANGES	1	2	3		4	5								6	7	8	9	10		
SLIPS IN REVERSE ONLY	1		2		3		4							5		6		7		
WILL NOT MOVE IN FORWARD OF REVERSE	1		2		3								4	5				6		
REVERSE OK, WILL NOT MOVE FORWARD IN D, 2, 1			1		2									3				4		
NO REVERSE			1		2		3									4		5		
MOVES IN NEUTRAL POSITION (CREEPS IN "N")			1											2						
DRAGS OR LOCKS UP					1	2	3		4					5	6	7	8			
GROWLING, GRATING OR SCRAPING NOISES	1								2		3		4							
BUZZING NOISE	1											2		3				4		
OIL BLOWS OUT FILLER TUBE	1									2			3	4						
OVERHEATS	1			2	5	4	7			3			6	8						
WILL NOT START IN N OR P POSITION			1					2						4					3	
SLUGGISH ACCELERATION, EXCESSIVE THROTTLE NEEDED TO MAINTAIN SPEED	1	3			5														2	4

80086A

SPECIFICATIONS

Hydraulic Pressure Test Specifications

Lube Pressure	Closed throttle Full throttle	5-30 psi (34-207 kPa) 5-30 psi (34-207 kPa)
Line Pressure	Closed throttle 1000 rpm	54-60 psi (372-414 kPa) 57-94 psi (393-648 kPa)
Front Servo Release	Third gear only	No more than 3 psi (21 kPa) lower than line pressure
Rear Servo Apply	1 Range R Range	No more than 3 psi (21 kPa) lower than line pressure 160 psi (1103 kPa) at idle, builds to 270 psi (1862 kPa) at 1600 RPM.
Governor	D Range Closed throttle	Pressure should respond smoothly to changes in MPH and return to 0 to 1-1/2 PSI (0-7 kPa) when stopped with transmission in D, 1, 2. Pressure above 1-1/2 PSI (7 kPa) at standstill will prevent transmission from downshifting.

70125

Hydraulic Pressure Test Diagnosis

Condition	Indication
Line pressure OK during any one test	Pump and regulator valve OK
Line pressure OK in R but low in D, 2, 1	Leakage in rear clutch area (servo, clutch seals, governor support seal rings)
Pressure OK in 1, 2 but low in D3 and R	Leakage in front clutch area (servo, clutch seals, retainer bore, pump seal rings)
Pressure OK in 2 but low in R and 1	Leakage in rear servo
Front servo pressure in 2	Leakage in servo; broken servo ring or cracked servo piston
Pressure low in all positions	Clogged filter, stuck pressure regulator valve, worn or defective pump
Governor pressure high at idle (over 0 to 1-1/2 psi)	Governor valve sticking open
Governor pressure zero or below specifications at all mph figures	Governor valve sticking in closed position
Lubrication pressure low at all throttle positions	Clogged oil cooler or lines, seal rings leaking, output shaft plugged with debris, worn bushings in pump or clutch retainer

70126

Lockup Torque Converter Service Diagnosis

Condition	Possible Cause	Correction
NO LOCKUP	(1) Faulty oil pump.	(1) Replace oil pump.
	(2) Sticking governor valve.	(2) Repair or replace as necessary.
	(3) Valve body malfunction. (a) Stuck switch valve. (b) Stuck lockup valve. (c) Stuck fail-safe valve.	(3) Repair or replace valve body or its internal components as necessary.
	(4) Faulty torque converter.	(4) Replace torque converter.
	(5) Failed locking clutch.	(5) Replace torque converter.
	(6) Leaking turbine hub seal.	(6) Replace torque converter.
	(7) Faulty input shaft or seal ring.	(7) Repair or replace as necessary.
WILL NOT UNLOCK	(1) Sticking governor valve.	(1) Repair or replace as necessary.
	(2) Valve body malfunction. (a) Stuck switch valve. (b) Stuck lockup valve. (c) Stuck fail-safe valve.	(2) Repair or replace valve body or its internal components as necessary.
STAYS LOCKED UP AT TOO LOW A SPEED IN DIRECT	(1) Sticking governor valve.	(1) Repair or replace as necessary.
	(2) Valve body malfunction. (a) Stuck switch valve. (b) Stuck lockup valve. (c) Stuck fail-safe valve.	(2) Repair or replace valve body or its internal components as necessary.
LOCKS UP OR DRAGS IN LOW OR SECOND	(1) Faulty oil pump.	(1) Replace oil pump.
	(2) Valve body malfunction. (a) Stuck switch valve. (b) Stuck fail-safe valve.	(2) Repair or replace valve body or its internal components as necessary.
SLUGGISH OR STALLS IN REVERSE	(1) Faulty oil pump.	(1) Replace oil pump as necessary.
	(2) Plugged cooler, cooler lines or fittings.	(2) Flush or replace cooler and flush lines and fittings.
	(3) Valve body malfunction. (a) Stuck switch valve. (b) Faulty input shaft or seal ring.	(3) Repair or replace valve body or its internal components as necessary.

81127A

Lockup Torque Converter Service Diagnosis (cont.)

Condition	Possible Cause	Correction
LOUD CHATTER DURING LOCKUP ENGAGEMENT (COLD)	(1) Faulty torque converter.	(1) Replace torque converter.
	(2) Failed locking clutch.	(2) Replace torque converter.
	(3) Leaking turbine hub seal.	(3) Replace torque converter.
VIBRATION OR SHUDDER DURING LOCKUP ENGAGEMENT	(1) Faulty oil pump.	(1) Repair or replace oil pump as necessary.
	(2) Valve body malfunction.	(2) Repair or replace valve body or its internal components as necessary.
	(3) Faulty torque converter.	(3) Replace torque converter.
	(4) Engine needs tune-up.	(4) Tune engine.
VIBRATION AFTER LOCKUP ENGAGEMENT	(1) Faulty torque converter.	(1) Replace torque converter.
	(2) Exhaust system strikes underbody.	(2) Align exhaust system.
	(3) Engine needs tune-up.	(3) Tune engine.
	(4) Throttle linkage misadjusted.	(4) Adjust throttle linkage.
VIBRATION WHEN REVVED IN NEUTRAL	(1) Torque converter out of balance.	(1) Replace torque converter.
OVERHEATING: OIL BLOWS OUT OF DIP STICK TUBE OR PUMP SEAL	(1) Plugged cooler, cooler lines or fittings.	(1) Flush or replace cooler and flush lines and fittings.
	(2) Stuck switch valve.	(2) Repair switch valve in valve body or replace valve body.
SHUDDER AFTER LOCKUP ENGAGEMENT	(1) Faulty oil pump.	(1) Replace oil pump.
	(2) Plugged cooler, cooler lines or fittings.	(2) Flush or replace cooler and flush lines and fittings.
	(3) Valve body malfunction.	(3) Repair or replace valve body or its internal components as necessary.
	(4) Faulty torque converter.	(4) Replace torque converter.
	(5) Fail locking clutch.	(5) Replace torque converter.
	(6) Exhaust system strikes underbody.	(6) Align exhaust system.
	(7) Engine needs tune-up.	(7) Tune engine.
	(8) Throttle linkage misadjusted.	(8) Adjust throttle linkage.

81127B

Torque Specifications

Service Set-To Torques should be used when assembling components. Service In-Use Recheck Torques should be used for checking a pre-tightened item.

	USA (ft-lbs)		Metric (N·m)	
	Service Set-To Torque	Service In-Use Recheck Torque	Service Set-To Torque	Service In-Use Recheck Torque
Cooler Line Fitting	160 in-lb	120-200 in-lb	18	14-23
Cooler Line Nut	150 in-lb	130-180 in-lb	17	15-20
Converter Drive Plate to Crankshaft Bolts - 4 Cylinder	58	50-56	79	68-89
Converter Drive Plate to Crankshaft Bolts - 6 Cylinder	105	95-120	142	129-163
Converter Drive Plate to Torque Converter Bolts - 4 Cylinder	40	35-40	54	47-54
Converter Drive Plate to Torque Converter Bolts - 6 Cylinder	26	22-30	35	30-44
Adapter Housing-to-Transmission Case Bolt	24	—	33	—
Governor Body Bolt	100 in-lb	—	11	—
Front Band Adjusting Screw Locknut	35	—	47	—
Kickdown Lever Shaft Plug	150 in-lb	—	17	—
Rear Band Adjusting Screw Locknut	35	—	47	—
Neutral Starter Switch	24	—	33	—
Oil Filler Tube Bracket Bolt	150 in-lb	—	17	—
Oil Pan Bolt	150 in-lb	9-13	17	12-18
Oil Pump Housing-to-Transmission Case Bolt	175 in-lb	—	20	—
Output Shaft Support Bolt	150 in-lb	—	17	—
Overrunning Clutch Cam Setscrew	40 in-lb	—	4	—
Pressure Test Port Plug	110 in-lb	—	12	—
Reaction Shaft Support to Oil Pump Bolt	160 in-lb	—	18	—
Transmission-to-Engine Bolt	28	22-30	38	30-41
Valve Body Screw	35 in-lb	—	4	—
Valve Body-to-Transmission Case Screw	100 in-lb	—	11	—

All torque values given in foot-pounds and newton-meters with dry fits unless otherwise specified.

70121

Fluid Level

Fill to "Add One Pint" mark on dipstick. Use Jeep, Dexron II®, or equivalent Automatic transmission fluid.

NOTE: Check fluid level with gearshift selector lever in N (neutral) position and with fluid at normal operating temperature.

70129

Fluid Capacity and Gear Ratios

Fluid Capacity — Transmission and Torque Converter	
999	17 pints (8 liters)
727	17 pints (8 liters)
Cooling Method	Water-Heat Exchanger in Radiator Lower Tank
Fluid Pressure and Lubrication — All Models	Rotor-Type Pump
Gear Ratios — 727	
First	2.45:1
Second	1.45:1
Third	1.00:1
Reverse	2.20:1
Gear Ratios — 999	
First	2.74:1
Second	1.55:1
Third	1.00:1
Reverse	2.20:1

80069

IN-VEHICLE SERVICE AND ADJUSTMENT

GEARSHIFT LINKAGE ADJUSTMENT

(1) Raise vehicle.

(2) Loosen shift rod trunnion jamnuts.

(3) Remove lockpin retaining shift rod trunnion to bellcrank and disengage trunnion and shift rod at bellcrank

(4) Place gearshift lever in Park position and lock steering column.

(5) Move valve body manual lever rearward into Park detent. Be sure lever is moved rearward as far as possible. Park detent is last rearward detent.

(6) Check for positive engagement of park lock by attempting to rotate propeller shaft. Shaft will not rotate if park lock pawl is fully engaged in park gear.

(7) Adjust shift rod trunnion to obtain free pin fit in bellcrank arm and tighten trunnion jamnuts. Prevent shift rod from turning while tightening jamnuts.

NOTE: *Gearshift linkage lash must be eliminated in order to obtain a proper adjustment. Eliminate lash by pulling downward on the shift rod and pressing upward on the outer bellcrank.*

(8) Move gearshift lever to Park and Neutral positions and check engine starting. Engine should start in these positions only. Engine must not start in any gear position other than Park or Neutral. If engine does not start or starts in R, D, 2, or 1, adjustment is incorrect or neutral switch is defective.

(9) Check steering lock for ease of operation.

(10) Lower vehicle.

FRONT BAND ADJUSTMENT

The front band adjusting screw is located on the left side of the transmission case just above the manual valve and throttle control levers (fig. 2C-19).

Adjustment Procedure

(1) Raise vehicle.

(2) Loosen adjusting screw locknut and back off locknut five turns.

(3) Check adjusting screw rotation. Screw must turn freely in case. Lubricate adjusting screw threads if screw binds.

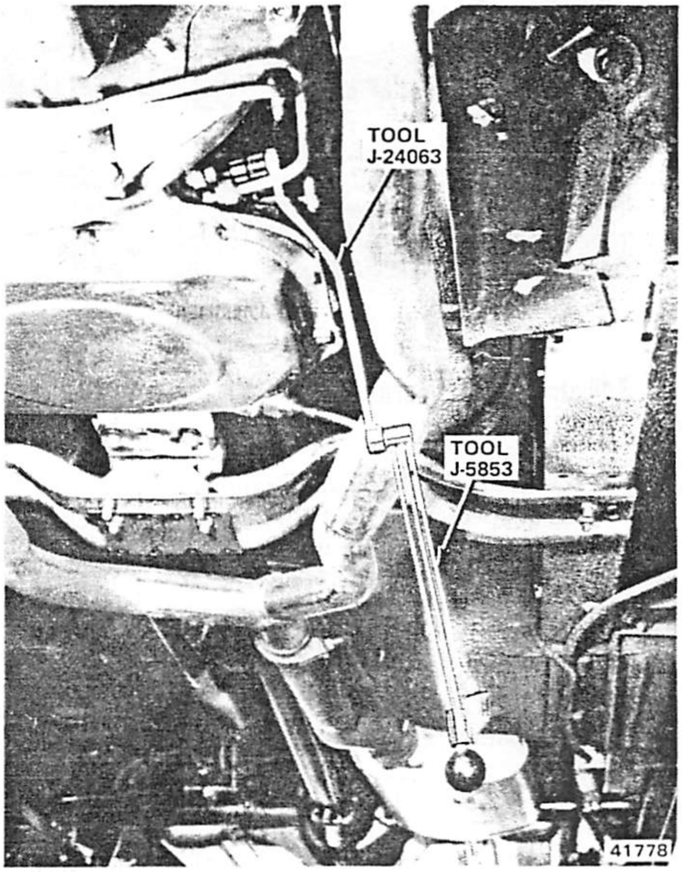

Fig. 2C-19 Front Band Adjustment

(4) Tighten adjusting screw to 36 inch-pounds (4 N•m) torque using Torque Wrench J-5853, Adapter Tool J-24063 and 5/16 square socket (fig. 2C-19).

CAUTION: *If Adapter Tool J-24063 is not used, the band adjusting screw must be tightened to 72 inch-pounds (8 N•m) torque.*

(5) Back off adjusting screw 2-1/2 turns.

(6) Tighten adjuster screw locknut to 35 foot-pounds (47 N•m) torque. Do not allow adjuster screw to rotate when tightening locknut.

(7) Lower vehicle.

REAR BAND ADJUSTMENT

The rear band adjustment is an internal adjustment. The transmission oil pan must be removed to gain access to the band adjusting screw (fig. 2C-20).

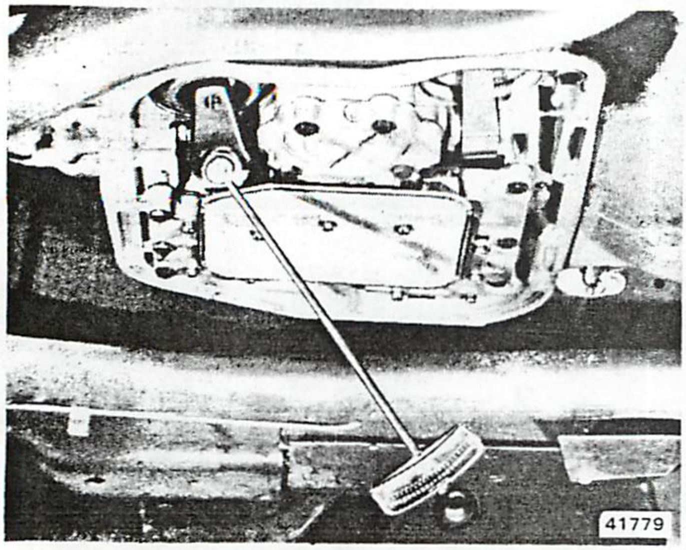

Fig. 2C-20 Rear Band Adjustment

Adjustment Procedure

(1) Raise vehicle.

(2) Remove oil pan and drain fluid.

(3) Inspect fluid and filter for heavy accumulation of friction material or metal particles which indicate worn or damaged parts. However, a very light accumulation of this material is normal.

(4) Adjust band as follows (fig. 2C-20):

(a) Remove adjusting screw locknut.

(b) Tighten adjusting screw to 41 inch-pounds (5 N•m) using torque wrench and 1/4 hex-head socket wrench.

(c) On Model 999, back off adjusting screw four turns.

(d) On Model 727, back off adjusting screw two turns.

(e) Hold adjusting screw in position and install locknut. Tighten locknut to 35 foot-pounds (47 N•m) torque.

(5) Install oil pan and replacement pan gasket. Tighten oil pan bolts to 150 inch-pounds (17 N•m) torque.

(6) Lower vehicle.

(7) Fill transmission with Jeep, Dexron, or equivalent automatic transmission fluid. Refer to Fluid Level and Condition for refill procedure.

OIL FILTER REPLACEMENT

(1) Raise vehicle.

(2) Remove oil pan and drain fluid.

(3) Inspect fluid and filter for heavy accumulation of friction material or metal particles which indicate worn or damaged parts.

(4) Remove three screws attaching filter to valve body and remove filter.

(5) Install replacement filter and tighten filter attaching screws to 35 inch-pounds (4 N•m) torque.

(6) Clean and install oil pan and replacement pan gasket. Tighten pan bolts to 150 *inch-pounds* (17 N•m) torque.

(7) Lower vehicle

(8) Fill transmission with Jeep, Dexron, or equivalent automatic transmission fluid. Refer to Fluid Level and Condition for refill procedure.

VALVE BODY SERVICE

Removal

(1) Raise vehicle.

(2) Remove oil pan and drain fluid.

(3) Loosen clamp bolts and remove throttle and manual valve control levers from valve body shafts.

(4) Remove neutral switch from case.

(5) Remove valve body attaching screws (fig. 2C-21).

(6) Lower valve body, pull valve body forward to disengage park lock rod, and remove valve body.

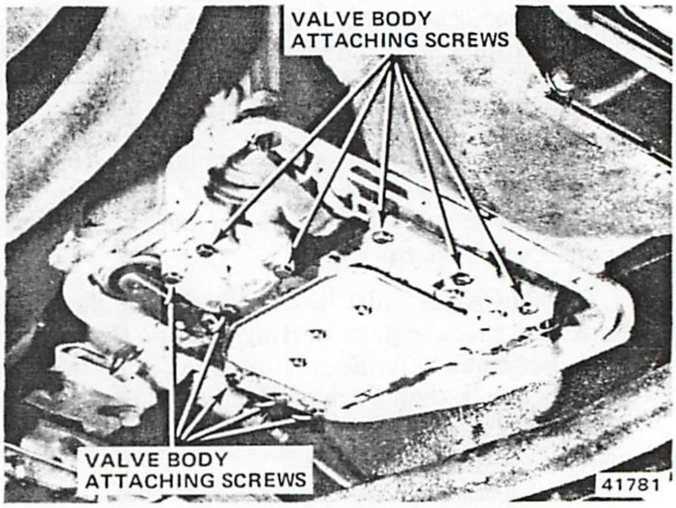

Fig. 2C-21 Valve Body Attaching Screw Location

NOTE: *It may be necessary to rotate the output shaft before the park lock rod will clear the park sprag.*

(7) Remove oil filter.

(8) Mount valve body on Support Stand J-24043.

(9) Refer to Out-of-Vehicle Service and Overhaul section for valve body service procedures.

Valve Body Hydraulic Control Pressure Adjustments

There are two hydraulic control pressure adjustments that can be performed on the valve body, they are: Line Pressure and Throttle Pressure adjustment.

Because line and throttle pressure are interdependent (each affects shift quality and timing), both adjustments must be performed properly and in the correct sequence which is; line pressure adjustment first—throttle pressure adjustment last.

Line Pressure Adjustment

(1) Measure distance from valve body to inner edge of adjusting screw using accurate steel scale (fig. 2C-22).

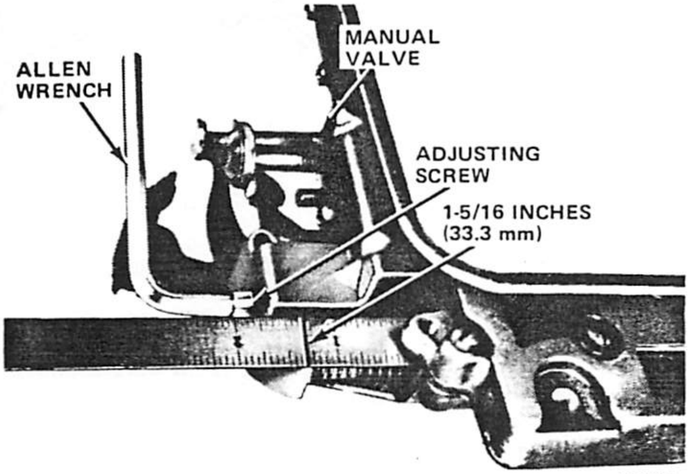

Fig. 2C-22 Line Pressure Adjustment

(2) Distance measured should be 1-5/16 inches (33.4 mm).

(3) If adjustment is required, turn adjusting screw in or out to obtain 1-5/16 inch (33.4 mm) setting.

NOTE: *The 1-5/16 inch (33.4 mm) setting is an approximate setting. Because of manufacturing tolerances, it may be necessary to vary from this dimension to obtain the desired pressure. One complete turn of the adjusting screw changes line pressure approximately 1-2/3 psi (9 kPa). Turning the adjusting screw counterclockwise increases pressure while turning the screw clockwise decreases pressure.*

Throttle Pressure Adjustment

(1) Insert Gauge Tool J-24031 between throttle lever cam and kickdown valve (fig. 2C-23).

(2) Push gauge tool inward to compress kickdown valve against spring and to bottom throttle valve in valve body.

(3) Maintain pressure against kickdown valve spring and turn throttle lever stop screw until screw head touches throttle lever tang and throttle lever cam touches gauge tool.

NOTE: *The kickdown valve spring must be fully compressed and the kickdown valve completely bottomed in the valve body to obtain a correct adjustment.*

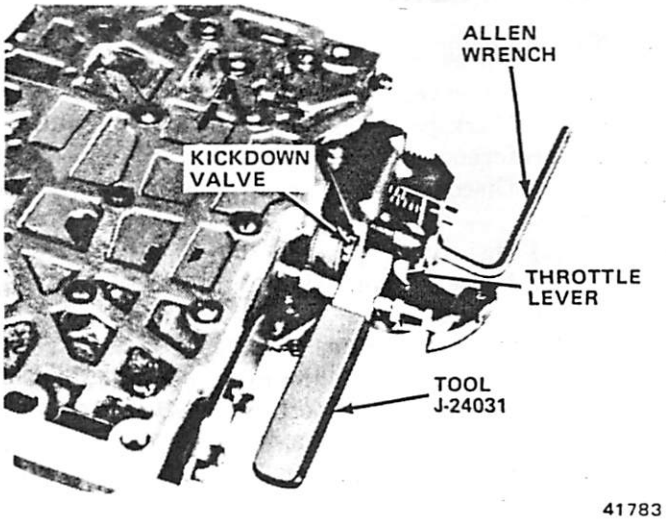

Fig. 2C-23 Throttle Pressure Adjustment

Installation

(1) Clean all mating surfaces. Be sure burrs are removed from transmission case and valve body steel plate surfaces.

(2) Position accumulator spring on valve body.

(3) Insert park lock rod through opening in rear of case.

(4) Position knob on end of lock rod against reaction plug in sprag and exert rearward pressure on rod to move rod past sprag. Rotate output shaft, if necessary.

(5) Align and install valve body. Install attaching screws finger-tight only.

(6) Install neutral switch.

(7) Move manual valve (in valve body) to neutral position. Align valve body as necessary to align neutral finger of manual lever with neutral switch plunger.

(8) Tighten valve body attaching screws alternately and evenly to 100 inch-pounds (11 N•m) torque.

(9) Install oil filter. Tighten attaching screws to 35 inch-pounds (4 N•m) torque.

(10) Install manual and throttle valve control levers and tighten clamp bolts. Check both shafts for binding after tightening bolts.

(11) Install oil pan and replacement gasket. Tighten oil pan bolts to 150 inch-pounds (17 N•m) torque.

(12) Lower vehicle.

(13) Fill transmission with Jeep, Dexron, or equivalent automatic transmission fluid. Refer to Fluid Level and Condition for refill procedure.

(14) Adjust gearshift and throttle linkage.

Front and Rear Servos

The front and rear servos may be removed, reconditioned and installed with the transmission in the vehicle.

For removal, inspection and installation procedures, refer to Out-Of-Vehicle Service and Overhaul section.

GOVERNOR VALVE SERVICE

Removal

(1) Raise vehicle.

(2) Mark propeller shaft yokes for assembly alignment reference.

(3) Disconnect front-rear propeller shafts at transfer case.

(4) Disconnect speedometer cable at transfer case.

(5) Place support stand under transmission converter housing.

(6) Remove rear crossmember.

(7) Disconnect parking brake cable at equalizer and disconnect exhaust pipe support brackets, if necessary.

(8) Remove bolts attaching transfer case to transmission adapter housing and remove transfer case.

(9) Remove bolts attaching adapter housing to transmission and remove adapter housing.

(10) Rotate transmission output shaft until governor weight faces downward (fig. 2C-24).

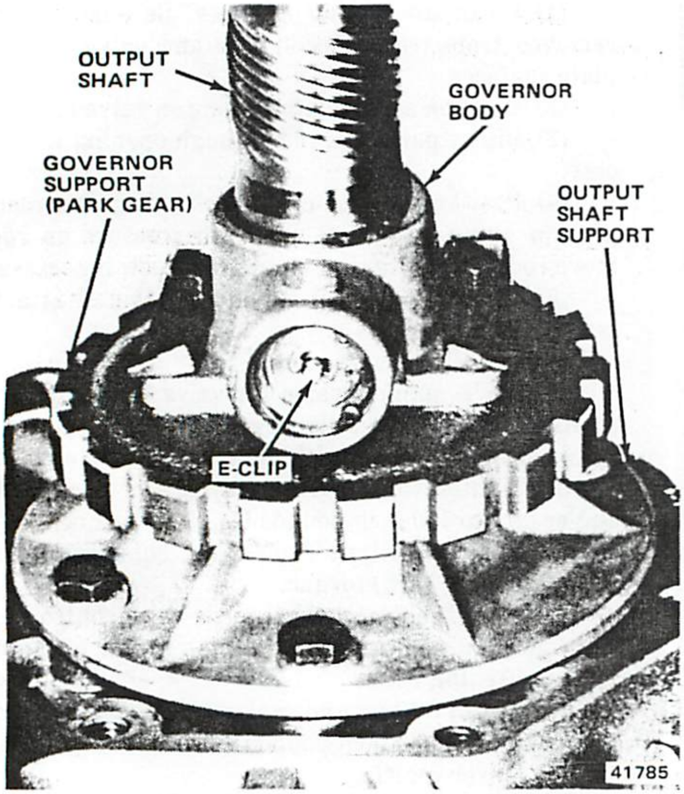

Fig. 2C-24 Governor Weight E-Clip Location

(11) Remove E-clip from weight end of governor valve shaft (fig. 2C-24).

(12) Remove governor valve and shaft from governor body (fig. 2C-25).

(13) Remove snap ring that retains governor body-park gear assembly on output shaft.

(14) Remove governor body-park gear assembly from output shaft.

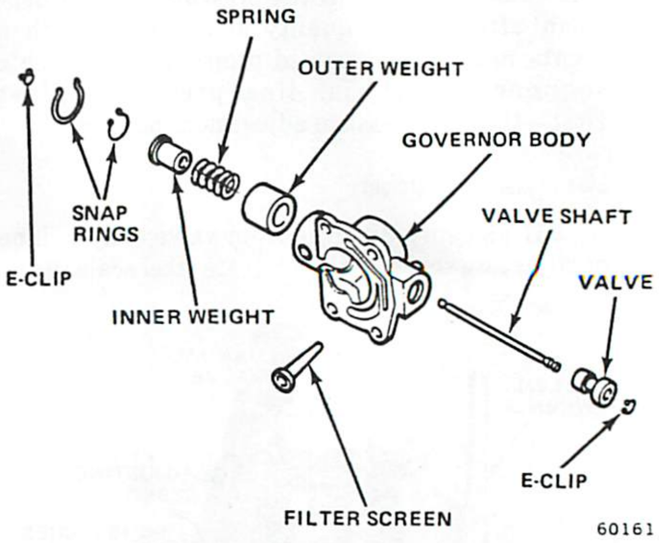

Fig. 2C-25 Governor Valve Assembly

Disassembly

(1) Remove large snap ring from weight end of governor body (fig. 2C-25).

(2) Remove weight assembly.

(3) Remove snap ring from governor weight assembly.

(4) Separate inner weight, spring, and outer weight. Identify spring with tag.

(5) If park gear or governor body is to be replaced, straighten lock tabs and remove bolts attaching body to gear.

(6) Remove governor filter.

Cleaning and Inspection

Thoroughly clean all governor parts in a suitable cleaning solution but do not use any type of caustic cleaning solution.

The weights and valves should fall freely in their bores when clean and dry. Rough surfaces and burrs may be polished using crocus cloth.

Inspect the governor weight spring for distortion. Replace the spring, if damaged.

Clean the filter in solvent and dry it with compressed air. Replace the filter, if damaged.

Inspect the park gear for chipped or worn gear teeth or damaged ring grooves. Replace the gear, if damaged.

Check the bolt torque on the output shaft support attaching bolts. If loose, cross-leakage and loss of governor pressure can occur.

Assembly

(1) If governor body was separated from park gear, install filter, assemble body and support, and install attaching bolts finger-tight.

NOTE: *Do not tighten the bolts to specified torque until the assembly is installed on the output shaft.*

(2) Install governor weights and spring inside of outer weight and install snap ring.

(3) Install weight assembly in body.

(4) Install snap ring.

Installation

(1) Position park gear-governor body assembly on output shaft.

(2) Align governor valve shaft hole in body with hole in output shaft and install assembly.

(3) Install snap ring in governor body.

(4) Install body-to-gear attaching bolts and tighten to 100 inch-pounds (11 Nm) torque.

(5) Bend ends of lock tabs against bolt heads.

(6) Install governor valve on valve shaft.

(7) Insert assembly into body and through governor weights.

(8) Install retaining E-clip.

(9) Install and tighten adapter housing bolts to 24 foot-pounds (32 N•m) torque.

(10) Install transfer case.

(11) Install rear crossmember.

(12) Connect speedometer cable.

(13) Connect exhaust support brackets and brake cable, if removed.

(14) Connect propeller shafts. Align assembly reference marks and tighten clamp bolts to 14 foot-pounds (19 N•m) torque.

(15) Adjust gearshift and throttle linkage.

(16) Lower vehicle.

(17) Fill transmission with Jeep, Dexron, or equivalent transmission fluid. Refer to Fluid Level and Condition for refill procedure.

PARK LOCK COMPONENT REPLACEMENT

Disassembly

(1) Remove adapter housing and transfer case as outlined in Governor Valve Service.

(2) Slide shaft out of housing and remove park sprag and spring (fig. 2C-23).

(3) Remove snap ring and slide reaction plug and pin assembly out of housing.

(4) To replace park lock control rod, refer to Valve Body in Out-of-Vehicle Service and Overhaul section.

Inspection

Check the sprag shaft for scores and for free movement in the housing and sprag. Check the sprag and control rod springs for loss of tension or distortion. Check the square lug on the sprag for broken edges. Check the lugs on the governor support (park gear) for broken edges. Check the knob on the end of the control rod for nicks, burrs, and free turning.

Assembly

(1) Install reaction plug and pin assembly in housing and install snap ring (fig. 2C-26).

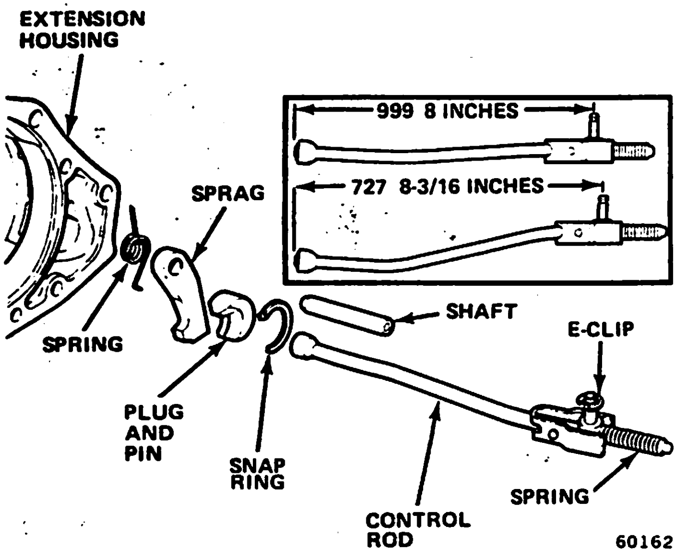

Fig. 2C-26 Park Lock Components

(2) Position sprag and spring in housing and install shaft. Be sure square lug on sprag is facing park gear and that spring is positioned so it moves sprag away from gear.

(3) Install transfer case and adapter housing as outlined in Governor Valve Service.

NEUTRAL START AND BACKUP LAMP SWITCH

The neutral starting section of the switch is contained in the center terminal of the three terminal switch. It provides a ground for the starter solenoid circuit through the gearshift lever in Park and Neutral positions only.

The two outside terminals of the neutral switch are for the backup lamp switch circuit (fig. 2C-27). Refer to the wiring diagrams at the end of this volume for switch circuitry.

Test and Replacement Procedure

Neutral Start Circuit

(1) Remove wiring connector from switch and test for continuity between center terminal pin and transmission case. Continuity should exist only when transmission is in Park or Neutral.

(2) If tests show switch may be defective, check gearshift linkage adjustment before replacing switch.

(3) Remove switch from transmission. Allow transmission fluid to drain into container.

(4) Move gearshift lever to Park and Neutral positions. Inspect switch operating lever fingers and manual

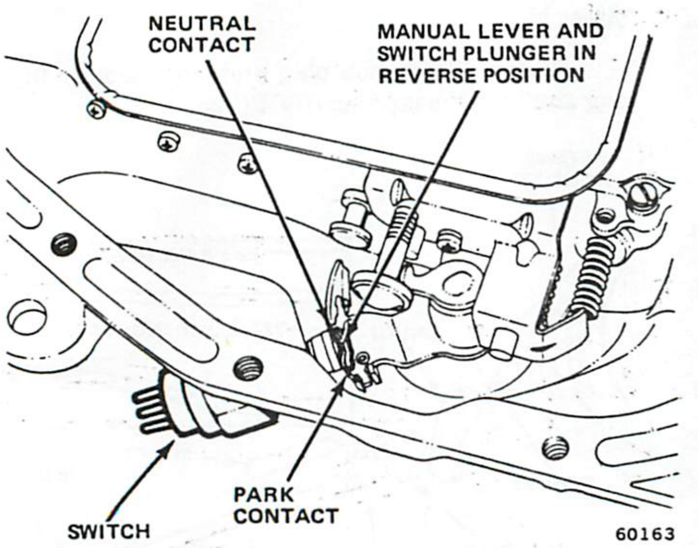

Fig. 2C-27 Neutral Start and Backup Lamp Switch

lever and shaft for proper alignment with switch opening in case.

(5) Install switch and switch seal in transmission case. Tighten switch to 24 foot-pounds (33 N•m) torque.

(6) Test switch continuity.

(7) Correct transmission fluid level as required. Refer to Fluid Level and Condition for refill procedure.

Backup Lamp Circuit

(1) Remove wiring connector from switch and test for continuity between two outside pins.

(2) Continuity should exist when transmission is in reverse only.

(3) Continuity should not exist from either pin to transmission case in reverse.

(4) Replace switch if tests prove switch is defective.

THROTTLE LINKAGE ADJUSTMENT

Six-Cylinder CJ-7-Scrambler-Cherokee-Wagoneer and J-10 Truck Models with 999 Transmission and 2.73 Axle Ratio

(1) Disconnect throttle control rod spring.

(2) Use throttle control rod spring to hold adjusting link in forward position against nylon washer (fig. 2C-28).

(3) Block choke open and set carburetor throttle off fast idle cam.

(4) Raise vehicle.

(5) Loosen **both** retaining bolts on throttle control adjusting link. DO NOT REMOVE SPRING CLIP AND NYLON WASHER.

(6) Use spare throttle return spring to hold transmission throttle lever forward against stop. Hook one end of spring on throttle lever and other end in cast boss on side of torque converter housing (fig. 2C-29).

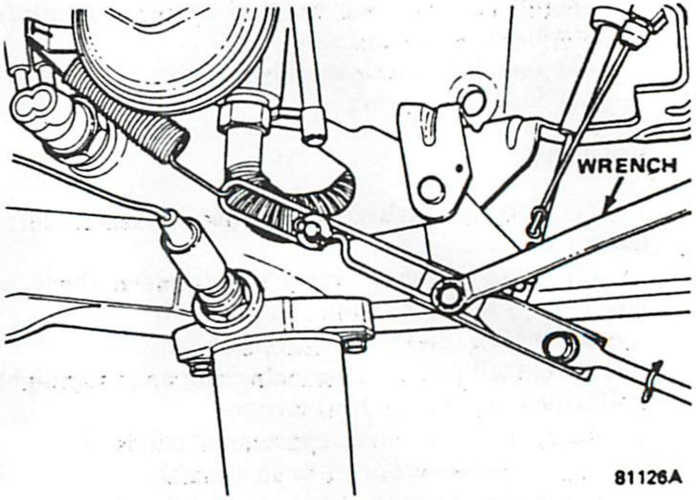

Fig. 2C-28 Throttle Linkage Adjustment—Six-Cylinder Engine

(7) Push on end of link to eliminate lash and pull clamp **rearward** so bolt in rod bottoms in rear of slot in rod. Tighten clamp to link using forward bolt.

(8) Pull throttle control rod rearward so bolt in rod bottoms in front of slot in rod. Tighten rearward retaining bolt.

(9) Remove spare throttle return spring from throttle lever.

(10) Lower vehicle.

(11) Remove throttle control rod spring from adjusting link and install on control rod.

Six-Cylinder Cherokee-Wagoneer and Truck Models with 727 Transmission and 3.31 Axle Ratio

(1) Disconnect throttle control rod spring at carburetor.

(2) Raise vehicle.

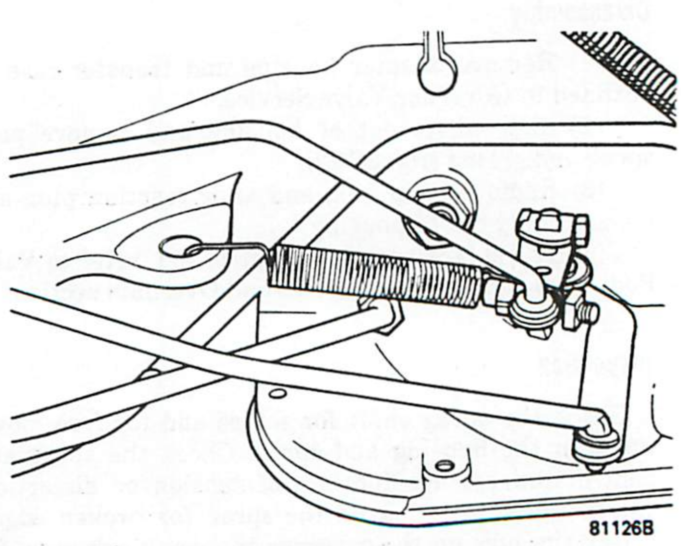

Fig. 2C-29 Installing Throttle Control Lever Spring—Six-Cylinder Engine

(3) Use throttle control rod spring to hold transmission throttle control lever forward against stop (fig. 2C-30). Hook one end of spring on throttle control lever and other end on throttle linage bellcrank bracket attached to converter housing.

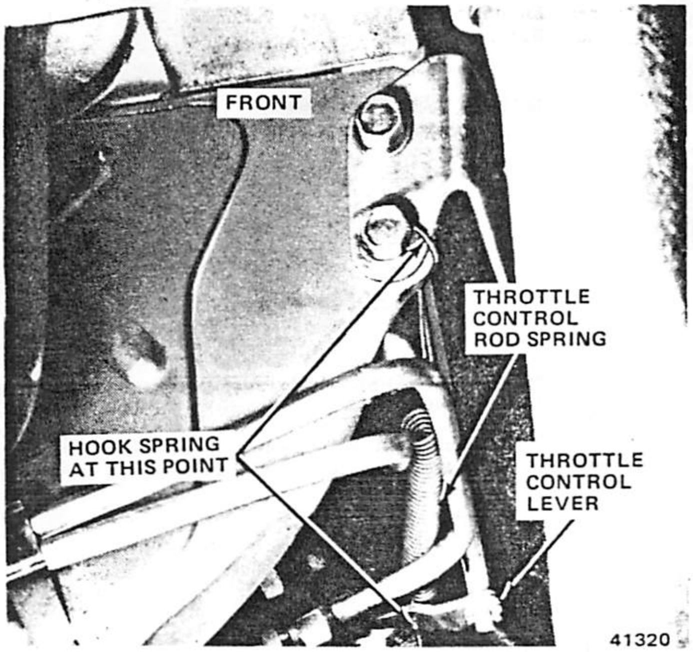

Fig. 2C-30 Installing Throttle Control Lever Spring—Six-Cylinder Engine

(4) Block choke open and set carburetor throttle off fast idle cam.

NOTE: *On carburetors equipped with a throttle operated solenoid valve, turn the ignition lock to the ON position to energize the solenoid. Then open the throttle halfway to allow the solenoid to lock and return the carburetor to idle position.*

(5) Loosen retaining bolt on throttle control adjusting link. **Do not remove spring clip and nylon washer.**

(6) Pull on end of link to eliminate lash and tighten link retaining bolt (fig. 2C-31).

(7) Remove throttle control rod spring from linkage and install it on control rod.

(8) Lower vehicle.

Throttle Linkage Adjustment—Eight-Cylinder Engine

(1) Disconnect throttle control rod spring at carburetor.

(2) Raise vehicle.

(3) Use throttle control rod spring to hold transmission throttle valve control lever forward against stop.

(4) Block choke open and set carburetor throttle off fast idle cam.

NOTE: *On carburetors equipped with throttle operated solenoid valve, turn ignition lock to ON position to energize solenoid. Then open throttle halfway to allow solenoid to lock and return carburetor to idle position.*

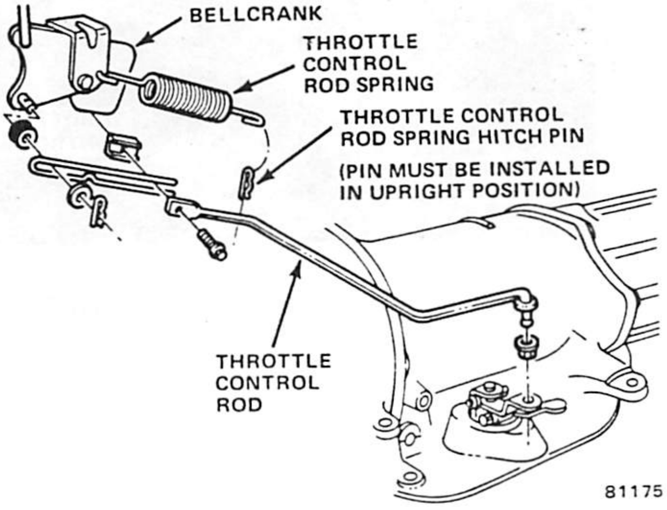

Fig. 2C-31 Throttle Control Assembly—Six-Cylinder Engine

(5) Loosen retaining bolt on throttle control rod adjusting link. Remove spring clip and move nylon washer to rear of link.

(6) Push on end of link to eliminate lash and tighten link retaining bolt (fig. 2C-32).

(7) Install nylon washer and spring clip (fig. 2C-33).

(8) Remove throttle control rod spring from linkage and install it on rod.

(9) Lower vehicle.

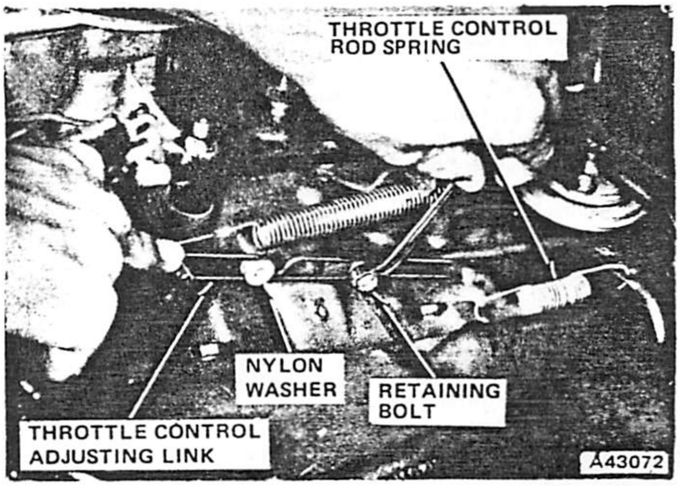

Fig. 2C-32 Tightening Link Retaining Bolt—Eight-Cylinder Engine

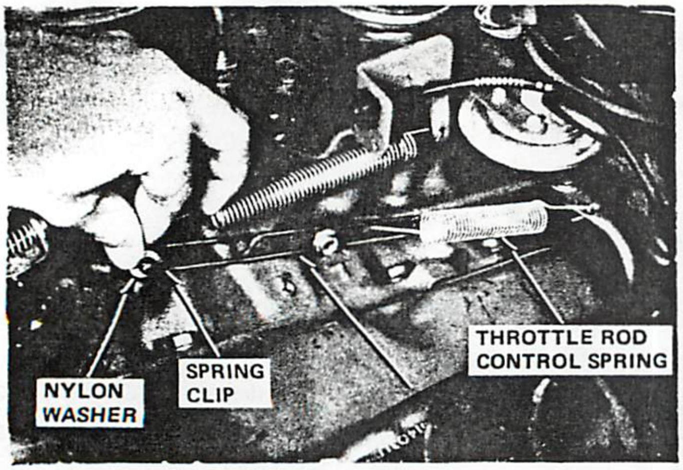

Fig. 2C-33 Installing Nylon Washer and Spring Clip—Eight-Cylinder Engine

SPECIFICATIONS

Band Adjustments

	999	727
Front Band Turns*	2	2-½
Rear Band Turns*	4	2

NOTE: * 999/727 models backed off from 72 in-lb (8 N.m).

70130

Fluid Levels

Fill to "Add One Pint" mark on dipstick. Use Jeep, Dexron II®, or equivalent Automatic transmission fluid.

NOTE: Check fluid level with gearshift selector lever in N (neutral) position and with fluid at normal operating temperature.

70129

Torque Specifications

Service Set-To Torques should be used when assembling components. Service In-Use Recheck Torques should be used for checking a pre-tightened item.

	USA (ft-lbs)		Metric (N·m)	
	Service Set-To Torque	Service In-Use Recheck Torque	Service Set-To Torque	Service In-Use Recheck Torque
Cooler Line Fitting	160 in-lb	120-200 in-lb	18	14-23
Cooler Line Nut	150 in-lb	130-180 in-lb	17	15-20
Converter Drive Plate to Crankshaft Bolts - 4 Cylinder	58	50-56	79	68-89
Converter Drive Plate to Crankshaft Bolts - 6 Cylinder	105	95-120	142	129-163
Converter Drive Plate to Torque Converter Bolts - 4 Cylinder	40	35-40	54	47-54
Converter Drive Plate to Torque Converter Bolts - 6 Cylinder	26	22-30	35	30-44
Adapter Housing-to-Transmission Case Bolt	24	—	33	—
Governor Body Bolt	100 in-lb	—	11	—
Front Band Adjusting Screw Locknut	35	—	47	—
Kickdown Lever Shaft Plug	150 in-lb	—	17	—
Rear Band Adjusting Screw Locknut	35	—	47	—
Neutral Starter Switch	24	—	33	—
Oil Filler Tube Bracket Bolt	150 in-lb	—	17	—
Oil Pan Bolt	150 in-lb	9-13	17	12-18
Oil Pump Housing-to-Transmission Case Bolt	175 in-lb	—	20	—
Output Shaft Support Bolt	150 in-lb	—	17	—
Overrunning Clutch Cam Setscrew	40 in-lb	—	4	—
Pressure Test Port Plug	110 in-lb	—	12	—
Reaction Shaft Support to Oil Pump Bolt	160 in-lb	—	18	—
Transmission-to-Engine Bolt	28	22-30	38	30-41
Valve Body Screw	35 in-lb	—	4	—
Valve Body-to-Transmission Case Screw	100 in-lb	—	11	—

All torque values given in foot-pounds and newton-meters with dry fits unless otherwise specified.

70121

OUT-OF-VEHICLE SERVICE AND OVERHAUL

TRANSMISSION REMOVAL

(1) Disconnect fan shroud, if equipped.

(2) Disconnect transmission fill tube at upper bracket.

(3) Raise vehicle.

(4) Remove inspection cover from converter housing.

(5) Remove transmission fill tube.

(6) Remove starter.

(7) Mark propeller shafts and axle yokes for assembly alignment reference.

(8) Disconnect propeller shafts at transfer case yokes. Secure shafts to frame rails with wire.

(9) On eight-cylinder vehicles, disconnect exhaust pipes at exhaust manifolds.

(10) Drain transfer case lubricant from Cherokee, Wagoneer and Truck models and disconnect speedometer cable at transfer case.

(11) Disconnect gearshift and throttle linkage.

(12) Disconnect wires at neutral start switch.

(13) Mark converter drive plate and converter for assembly alignment reference.

(14) Remove bolts attaching converter to drive plate. Rotate crankshaft and drive plate using ratchet handle and socket on crankshaft front pulley bolt to gain access to drive plate bolts.

(15) Support transmission-transfer case assembly using transmission jack. Retain transmission on jack with safety chain.

(16) Remove bolts attaching rear crossmember to transmission.

(17) Remove rear crossmember.

(18) Lower transmission slightly and disconnect oil cooler lines at transmission.

(19) Remove bolts attaching transmission to engine.

(20) Move transmission and converter rearward to clear crankshaft.

(21) Hold converter in position and lower transmission assembly until converter housing clears engine.

(22) Remove transfer case from transmission.

(23) If necessary, the following items can now be serviced:

- Torque Converter
- Torque Converter Drive Plate
- Oil Pump Seal (figs. 2C-34 and 2C-35)
- Engine Core Hole Plugs
- Engine Oil Galley Plugs

CAUTION: *If the transmission was removed to correct a malfunction that generated sludge or heavy accumulations of metal particles or friction material, the oil cooler and cooler lines must be flushed thoroughly and the torque converter replaced. Do not attempt to flush the converter if it is contaminated. Refer to Diagnosis—Test Procedures in this chapter for procedure for flushing oil cooler and lines.*

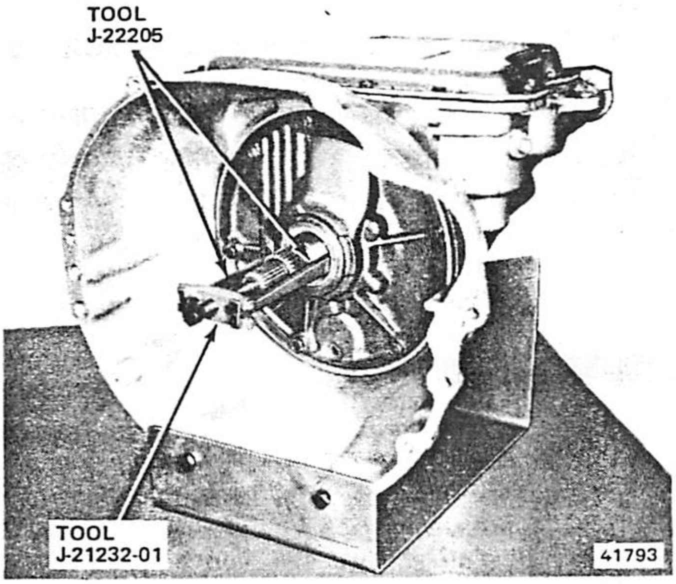

Fig. 2C-34 Oil Pump Seal Removal

TRANSMISSION INSTALLATION

(1) Install transfer case on transmission.

(2) If torque converter was removed, insert Pump Aligning Tool J-24033 (Model 999) or J-24045 (Model 727) in pump rotor until rotor drive lugs engage slots in tool.

(3) Rotate tool until drilled hole in tool is vertical and remove tool.

(4) Rotate converter until pump drive slots in converter hub are vertical and carefully insert converter hub into pump. Be sure drive lugs of pump inner rotor are properly engaged in drive slots of converter hub.

(5) Raise transmission and align converter with drive plate. Refer to assembly alignment marks.

(6) Move transmission forward.

(7) Raise, lower or tilt transmission to align converter housing pilot holes with dowels in engine.

(8) Install two converter housing lower attaching bolts and tighten bolts to pull housing to engine.

(9) Install drive plate-to-converter attaching bolts.

(10) Install remaining converter housing-to-engine attaching bolts. Tighten all bolts to 28 foot-pounds (38 N•m) torque.

(11) Connect oil cooler lines.

(12) Install rear support cushion on transmission.

(13) Raise transmission and install rear crossmember.

(14) Remove transmission jack.

(15) Install speedometer cable.

(16) Install inspection cover.

(17) Install exhaust pipes and support brackets, if removed.

(18) Install starter.

(19) Connect wires to neutral switch.

(20) Connect gearshift and throttle linkage.

(21) Install propeller shafts. Refer to alignment marks made during removal.

(22) Connect front exhaust pipes and catalytic converter support bracket bolts, if removed.

(23) Fill transfer case to correct level with specified lubricant.

(24) Lower vehicle.

(25) Fill transmission to correct level as described in Fluid Level and Condition.

(26) Adjust gearshift linkage.

(27) Road test to check transmission operation.

TRANSMISSION DISASSEMBLY

CAUTION: *Cleanliness during disassembly and assembly is necessary to avoid a further malfunction after assembly. Before removing any of the transmission subassemblies, plug all openings and thoroughly clean the transmission exterior. Steam cleaning equipment is preferable for this purpose. During disassembly, clean all parts in a suitable solvent and dry each part using compressed air. Do not use cloth or paper towels to dry any parts after cleaning, use compressed air only.*

End Play Measurement

NOTE: *Measuring end play before disassembly will indicate whether a thrust washer change is required and save time at assembly.*

(1) Mount transmission in Holding Fixture J-24026 (fig. 2C-36).

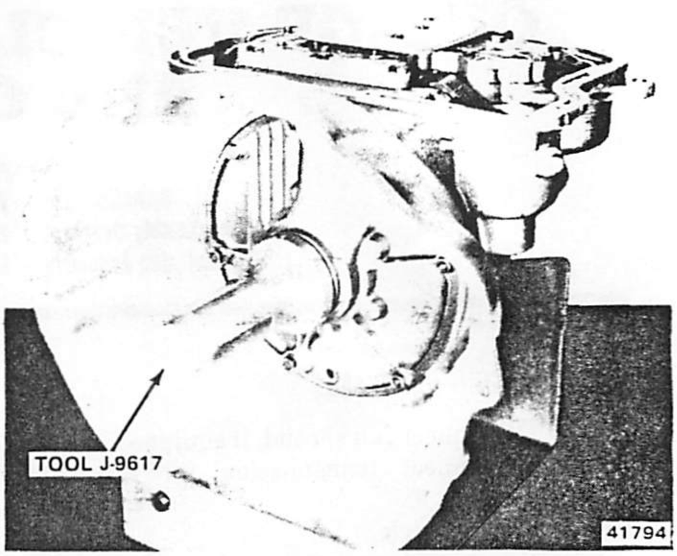

Fig. 2C-35 Oil Pump Seal Installation

(2) Remove one pump attaching bolt and thread Dial Indicator Support Rod J-5864 into bolt hole.

(3) Attach Dial Indicator J-8001 to rod.

(4) Position indicator stylus against forward end of input shaft (fig. 2C-37).

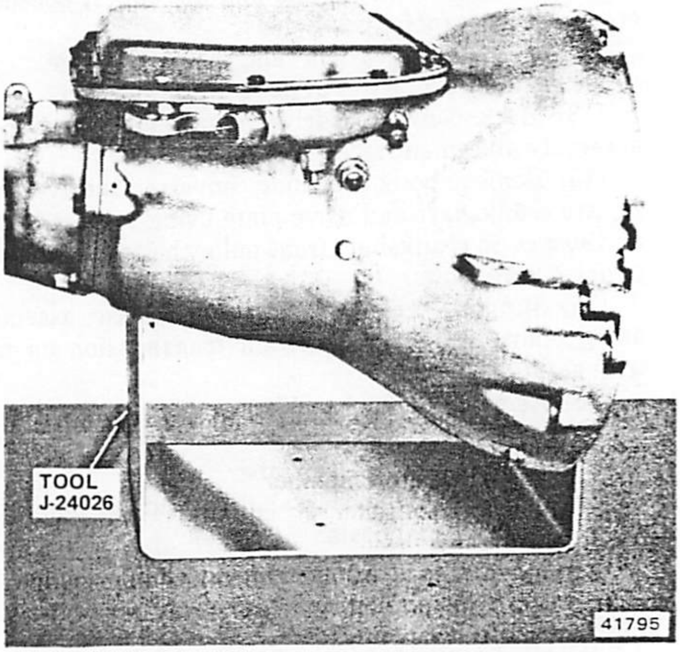

Fig. 2C-36 Transmission Holding Fixture

(5) Move input shaft rearward and set dial indicator at zero.

(6) Pull input shaft forward to obtain end play reading.

(7) Record reading for assembly reference.

(8) Remove dial indicator and rod.

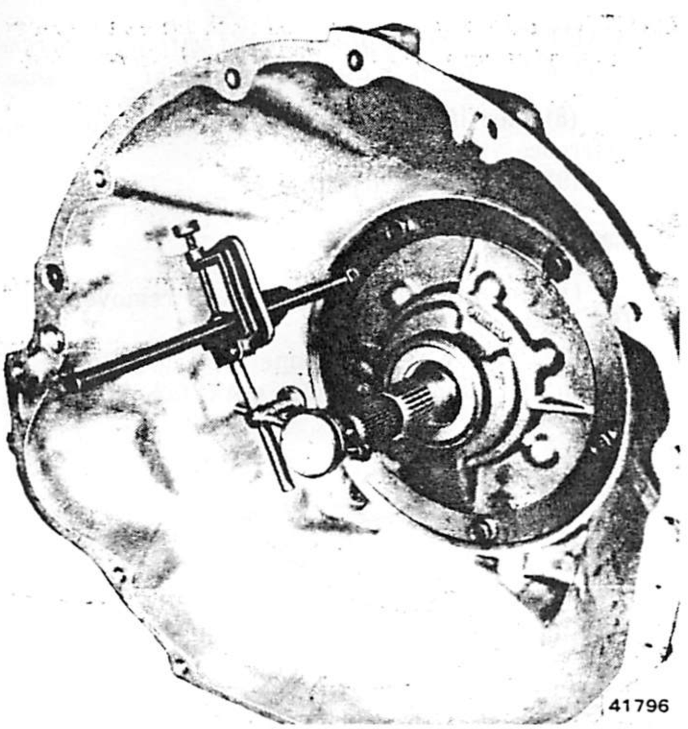

Fig. 2C-37 Measuring End Play

Oil Pan

Remove pan attaching bolts and remove oil pan and gasket. Be sure that any dirt which remained around bolts does not fall into transmission.

Valve Body

(1) Loosen clamp bolts and remove throttle and gear selector levers from shafts.

(2) Remove neutral start switch.

(3) Remove valve body attaching screws.

(4) Remove valve body. Lift valve body from case and pull park lock rod forward out of case at same time.

NOTE: *If necessary, rotate the output shaft to allow the park lock rod to clear the sprag.*

(5) Mount valve body on Support Stand J-24043.

Accumulator Piston and Spring

(1) Remove spring from piston.

(2) Identify spring with tag for assembly reference.

(3) Remove piston from case.

Governor and Support

(1) Remove E-clip from weight end of governor valve (fig. 2C-24).

(2) Remove valve and shaft from governor body.

(3) Rotate output shaft until governor weight faces downward.

(4) Remove snap ring retaining governor on output shaft.

(5) Remove governor body and park gear from output shaft.

Oil Pump and Reaction Shaft Support

(1) Tighten front band adjusting screw until band is tight around front clutch retainer. This prevents front clutch assembly from coming out with pump and damaging clutch discs.

(2) Remove oil pump attaching bolts.

(3) Install Slide Hammer Tool J-6585-1 on Slide Hammer Bolts Tool J-7004-3 (fig. 2C-38).

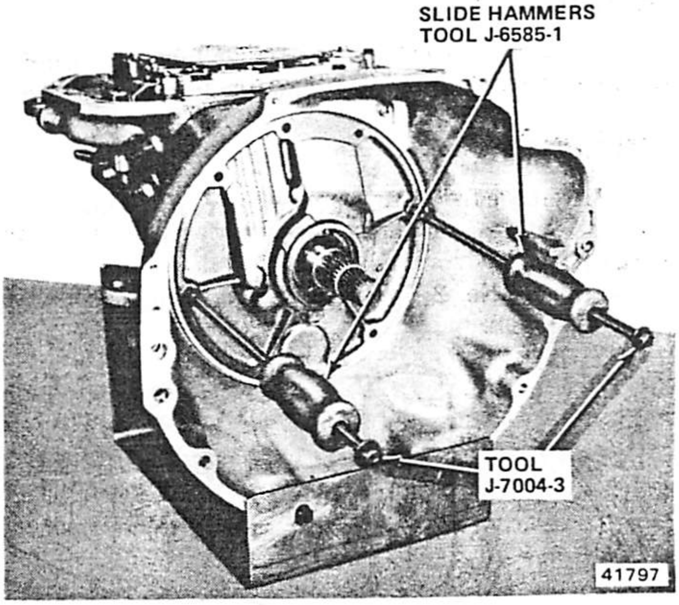

Fig. 2C-38 Oil Pump Removal

(4) Thread bolts into holes in oil pump housing flange.

(5) Bump outward evenly with slide hammers to remove pump and reaction shaft support.

Front Band and Front Clutch

(1) Loosen front band adjusting screw and remove band strut and band.

(2) Remove front clutch assembly.

Input Shaft and Rear Clutch

(1) Remove input shaft and rear clutch assembly by grasping input shaft and pulling assembly straight out of case.

NOTE: *Do not lose the thrust washer located between the rear end of the input shaft and the front end of the output shaft.*

Output Shaft—Planetary Gears

(1) Carefully remove driving shell and output shaft assembly.

CAUTION: *Be very careful to protect the machined surfaces on the output shaft during removal.*

Rear Band and Drum

(1) Pull drum forward and out of case.
(2) Loosen band adjusting screw.
(3) Thread 1/4-inch (6 mm) bolt into actuating lever pivot pin.
(4) Grip bolt with pliers and remove pivot pin.
(5) Remove lever, linkage and band.

Overrunning Clutch

Carefully remove clutch hub, rollers and springs, and store parts where they will not be lost or damaged.

Front Servo

(1) Remove front servo pressure port plug.
(2) Compress servo piston rod guide until it bottoms in case bore.
(3) Insert No. 2 Phillips screwdriver into pressure port (fig. 2C-39).

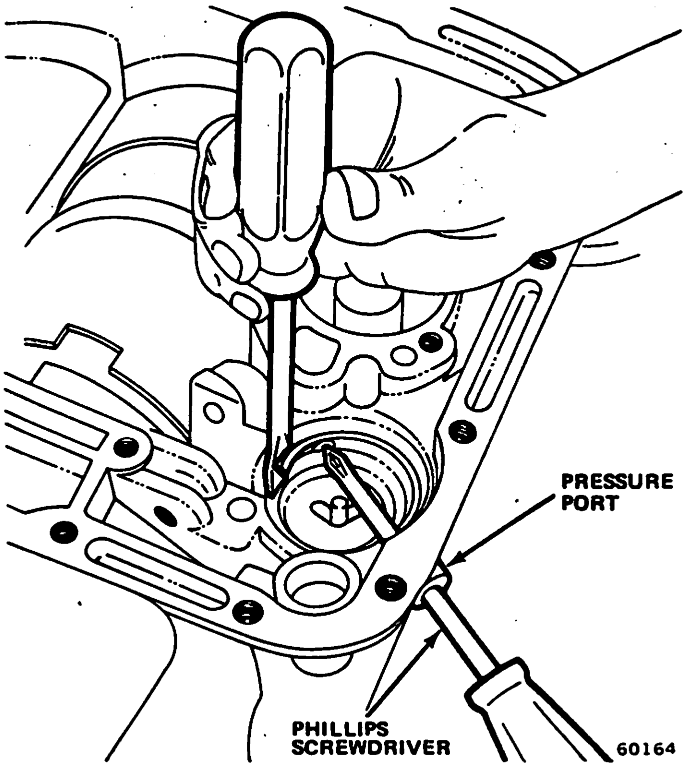

Fig. 2C-39 Front Servo Removal

(4) Slowly release rod guide against screwdriver (fig. 2C-39).
(5) Remove servo retaining snap ring.
(6) Compress rod guide and remove screwdriver.
(7) Slowly release rod guide and remove rod guide, springs and piston rod.

CAUTION: *Do not grasp the rod with pliers to remove it. If the rod sticks in the case, tap it gently to release it.*

(8) Identify servo spring(s) with tag(s) for assembly reference.
(9) Remove servo piston.

Rear Servo

(1) Compress piston spring and remove snap ring (fig. 2C-40).
(2) Remove spring retainer, spring, piston and plug assembly. Identify spring with tag for assembly reference.

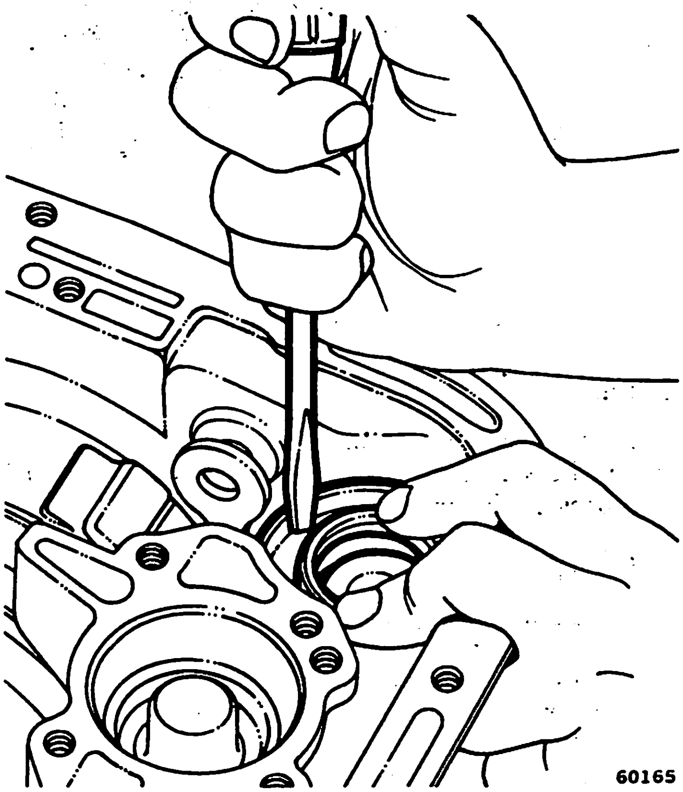

Fig. 2C-40 Rear Servo Spring and Snap Ring Removal

SUBASSEMBLY OVERHAUL

Valve Body

Disassembly

CAUTION: *Do not clamp any part of the valve body or transfer plate in a vise. Any slight distortion of the body or plate will cause sticking valves or excessive leakage or both. When removing and installing valves or plugs, slide them in or out very carefully. Do not use force to remove or install valves.*

(1) Mount valve body on Repair Stand Tool J-24043.

NOTE: *When disassembling the valve body, identify all valve springs with a tag for assembly reference.*

(2) Remove oil filter attaching screws and oil filter (fig. 2C-41).

NOTE: *Oil filter screws are longer than transfer plate screws.*

(3) Remove screws attaching lockup module to valve body (fig. 2C-42).

(4) Slide lockup module oil tube out of valve body and remove tube and module as an assembly.

(5) Remove end plate from module.

(6) Remove lockup valve and spring.

(7) Remove fail-safe valve and spring.

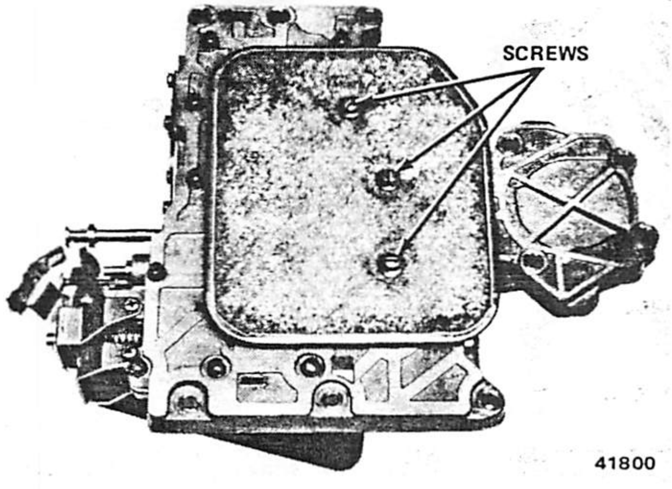

Fig. 2C-41 Oil Filter Removal

NOTE: *Tag springs and valves for reassembly reference.*

(8) Remove upper and lower screws from spring retainer and adjustment screw bracket (fig. 2C-43). Hold spring retainer firmly against spring force while removing last screw.

(9) Remove spring retainer, line and throttle pressure adjusting screws. Do not disturb screw settings. Remove line pressure and torque converter valve regulator springs. Tag springs for assembly reference.

(10) Remove line pressure regulator and torque converter control valves (fig. 2C-43).

(11) Remove transfer plate assembly retaining screws and remove transfer plate assembly.

(12) Remove screws attaching separator plate to transfer plate and separate these parts (fig. 2C-44).

(13) Remove rear clutch check ball from transfer plate and remove pressure regulator valve screen from separator plate.

(14) Remove check balls and spring from valve body (fig. 2C-45). Tag spring for assembly identification.

(15) Turn valve body over and remove shuttle valve cover plate (fig. 2C-46).

(16) Remove governor plug end plate (fig. 2C-47), shuttle valve throttle plug and spring, and 1-2 and 2-3 shift valve governor plugs.

(17) Remove shuttle valve E-clip, shuttle valve secondary spring, spring guides, and shuttle valve.

(18) Install Detent Ball Retainer Tool J-24044 around detent ball casing (fig. 2C-48).

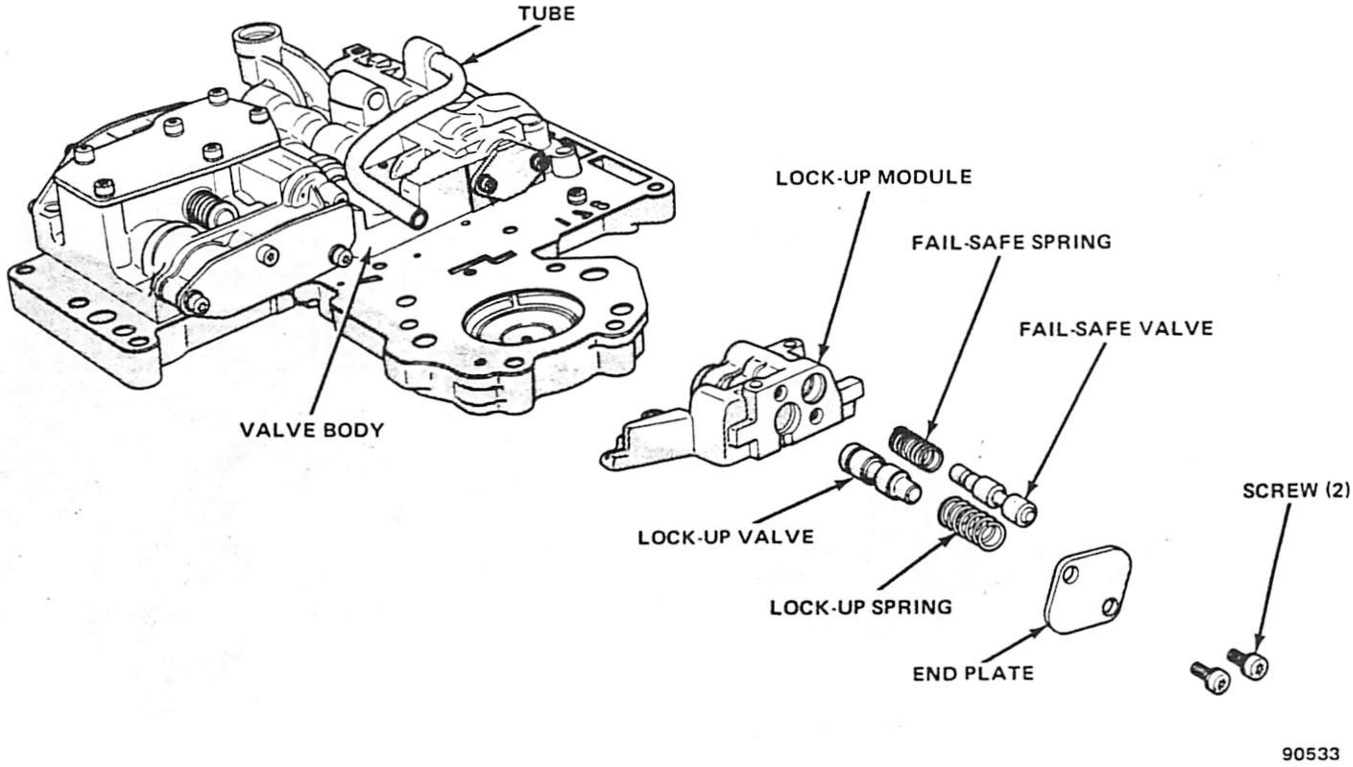

Fig. 2C-42 Lockup Module—Models 999/727

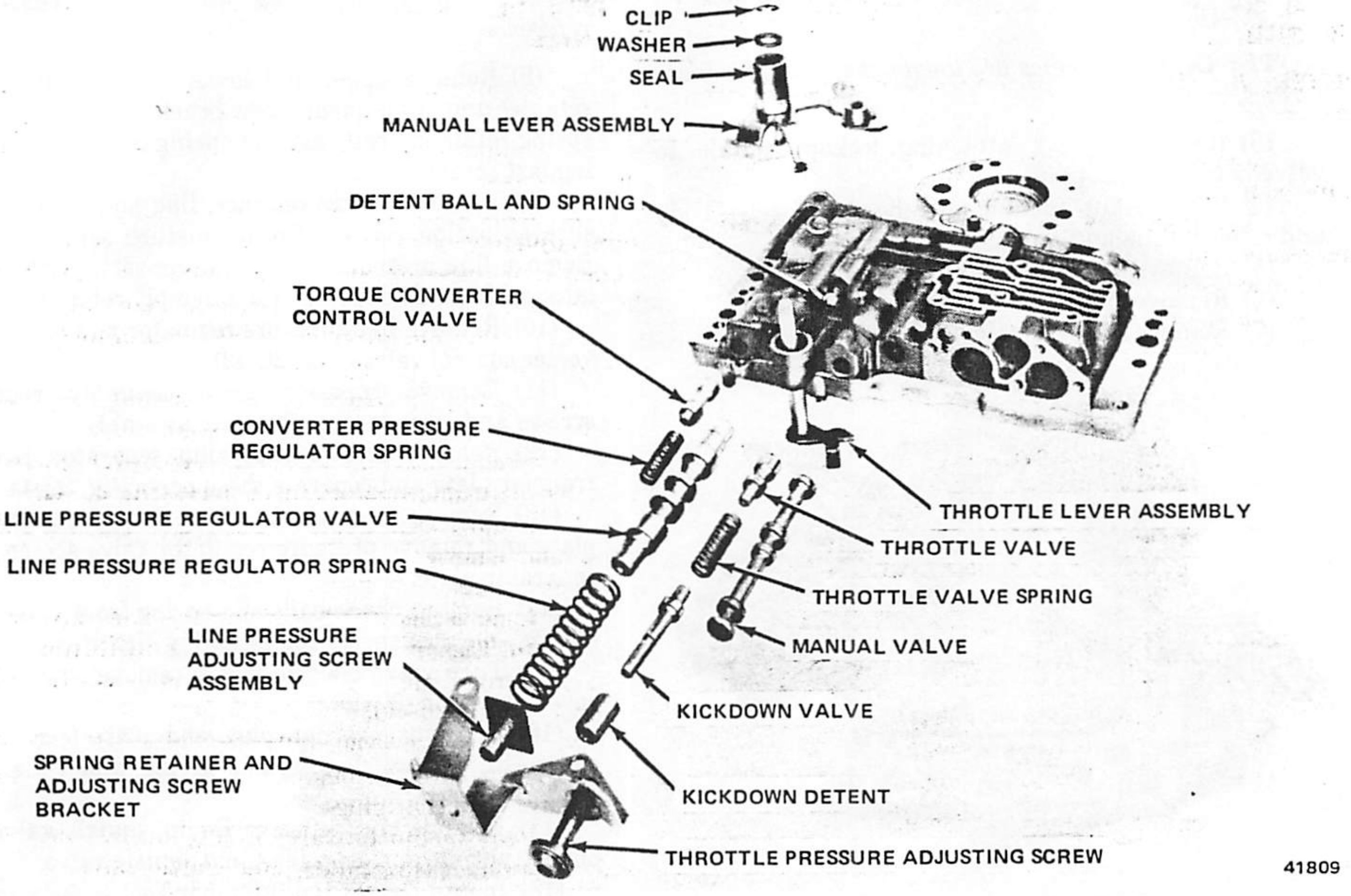

Fig. 2C-43 Pressure Regulator and Manual Controls

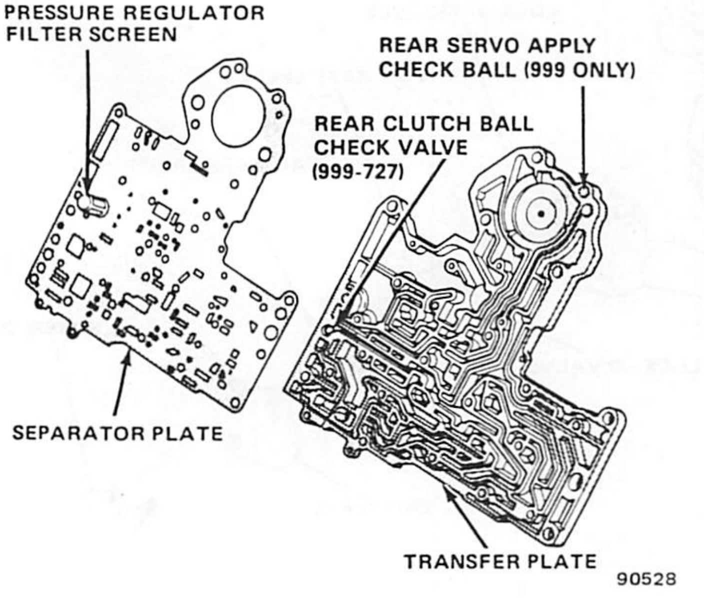

Fig. 2C-44 Transfer Plate Assembly

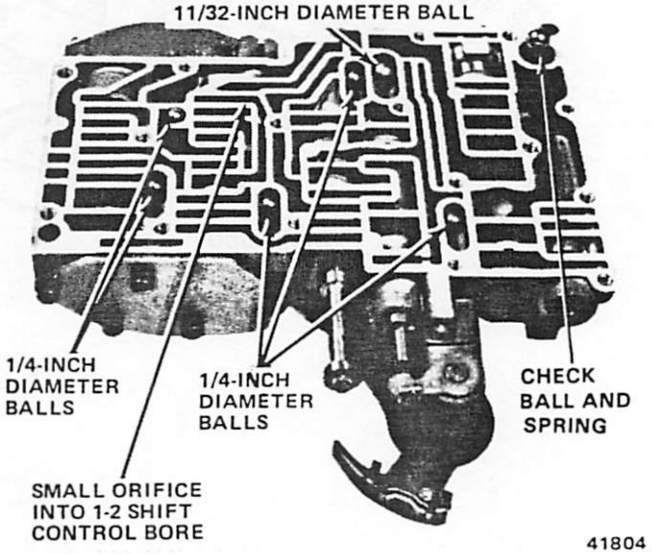

Fig. 2C-45 Check Ball Location

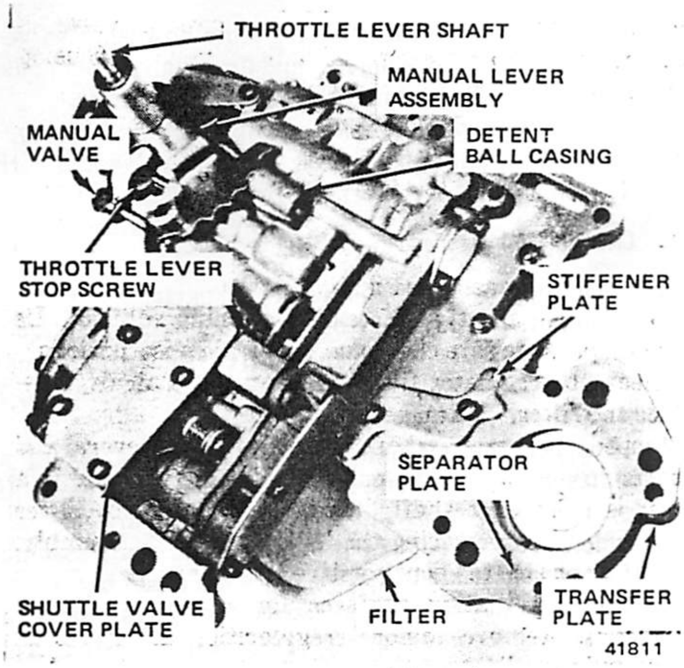

Fig. 2C-46 Valve Body Controls

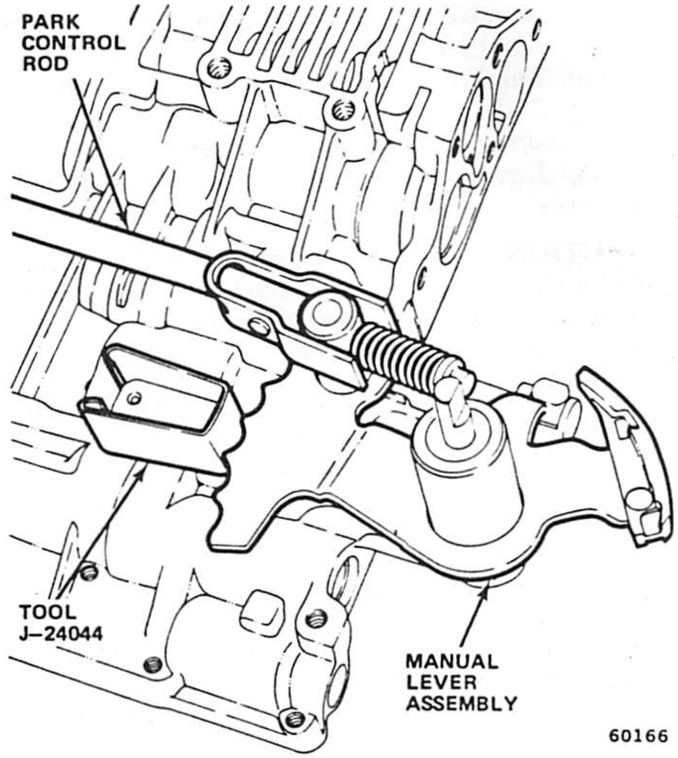

Fig. 2C-48 Installing Detent Ball Retaining Tool

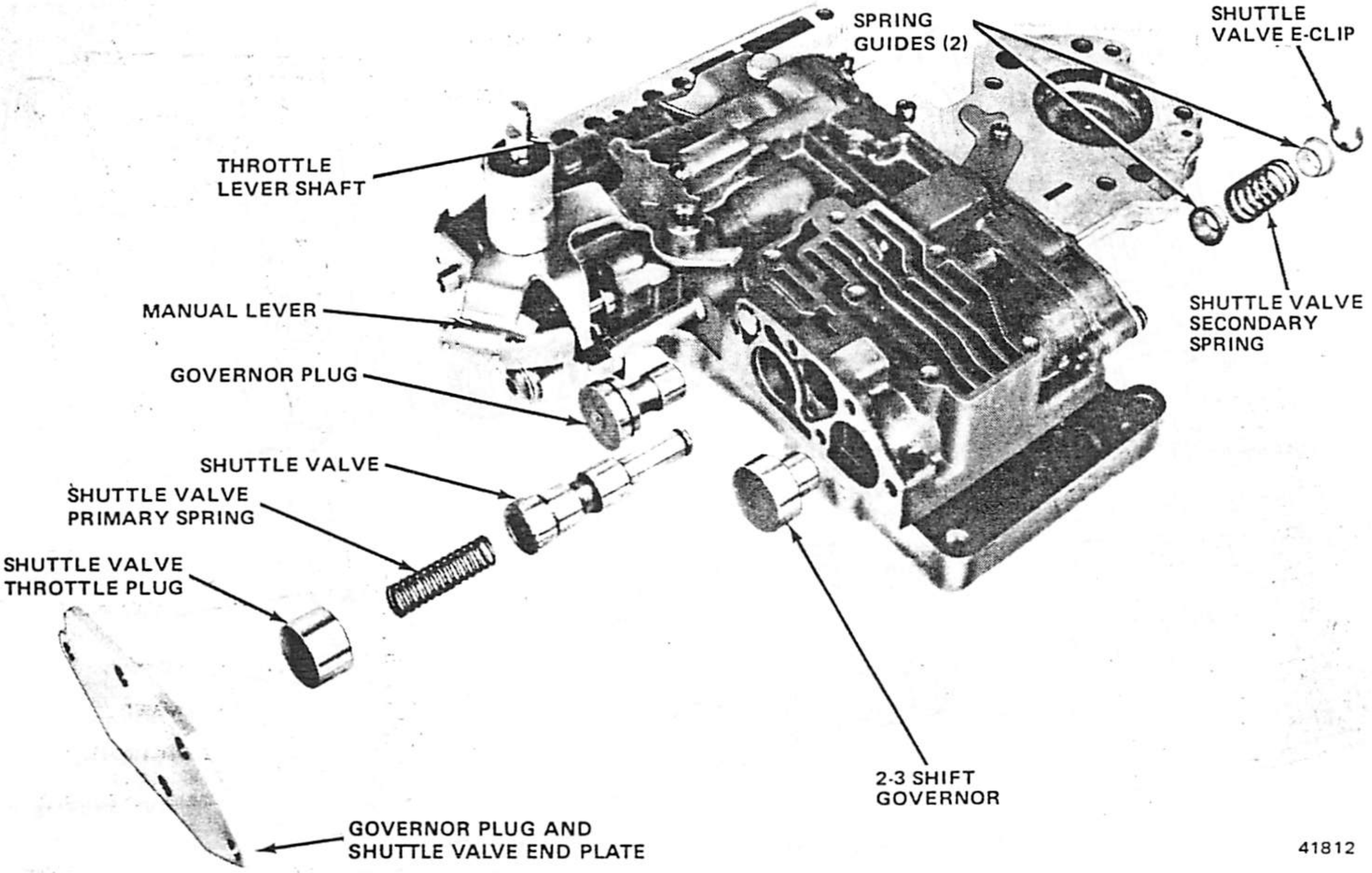

Fig. 2C-47 Shuttle Valve and Governor Plugs

(19) Remove E-clip, washer, and seal from throttle valve lever shaft (fig. 2C-47).

(20) Remove burrs on shaft with crocus cloth.

(21) Slide manual lever assembly off throttle lever shaft and remove throttle lever assembly.

(22) Remove E-clip and park control rod from manual lever.

CAUTION: *The detent ball retainer tool is holding the ball under spring pressure. Shield the ball casing area with one hand before removing the retainer tool and detent ball.*

(23) Remove retainer tool, detent ball, and spring. Tag spring for assembly reference.

(24) Remove manual valve.

(25) Remove kickdown detent, kickdown valve, throttle valve spring, and throttle valve (fig. 2C-47). Tag spring for assembly reference.

(26) Remove line pressure regulator valve end plate (fig. 2C-49).

(27) Remove sleeve, line pressure regulator valve plug, and throttle pressure regulator valve plug.

(28) On model 999, remove downshift valve housing end plate.

(29) On model 727 only, remove downshift valve housing, remove throttle plug from downshift valve retainer, and remove spring, and limit valve from housing (fig. 2C-49). Tag spring for assembly reference.

(30) Remove 1-2 shift control valve and spring, 1-2 shift valve and spring, and 2-3 shift valve and spring. Tag all springs for assembly reference.

Cleaning and Inspection

Thoroughly wash and air dry all parts.

Do not use any type of caustic cleaning solution. Be sure all passages are clean and free from obstructions.

Clean the regulator filter in solvent and air dry. Replace the filter, if damaged.

Inspect the manual and throttle valve levers and shafts for being bent, worn or excessively loose. If a lever is loose on a shaft, it may be repaired by silver soldering or by replacing the lever and shaft assembly. If a lever or shaft is bent, replace the assembly.

Inspect all mating surfaces for burrs, nicks and scratches. Remove minor irregularities using crocus cloth and very light pressure.

Use a straightedge and inspect all mating surfaces for warpage or distortion. Very slight warpage or distortion may be corrected by abrading the surface on a sheet of crocus cloth. Position the cloth on a surface plate or flat

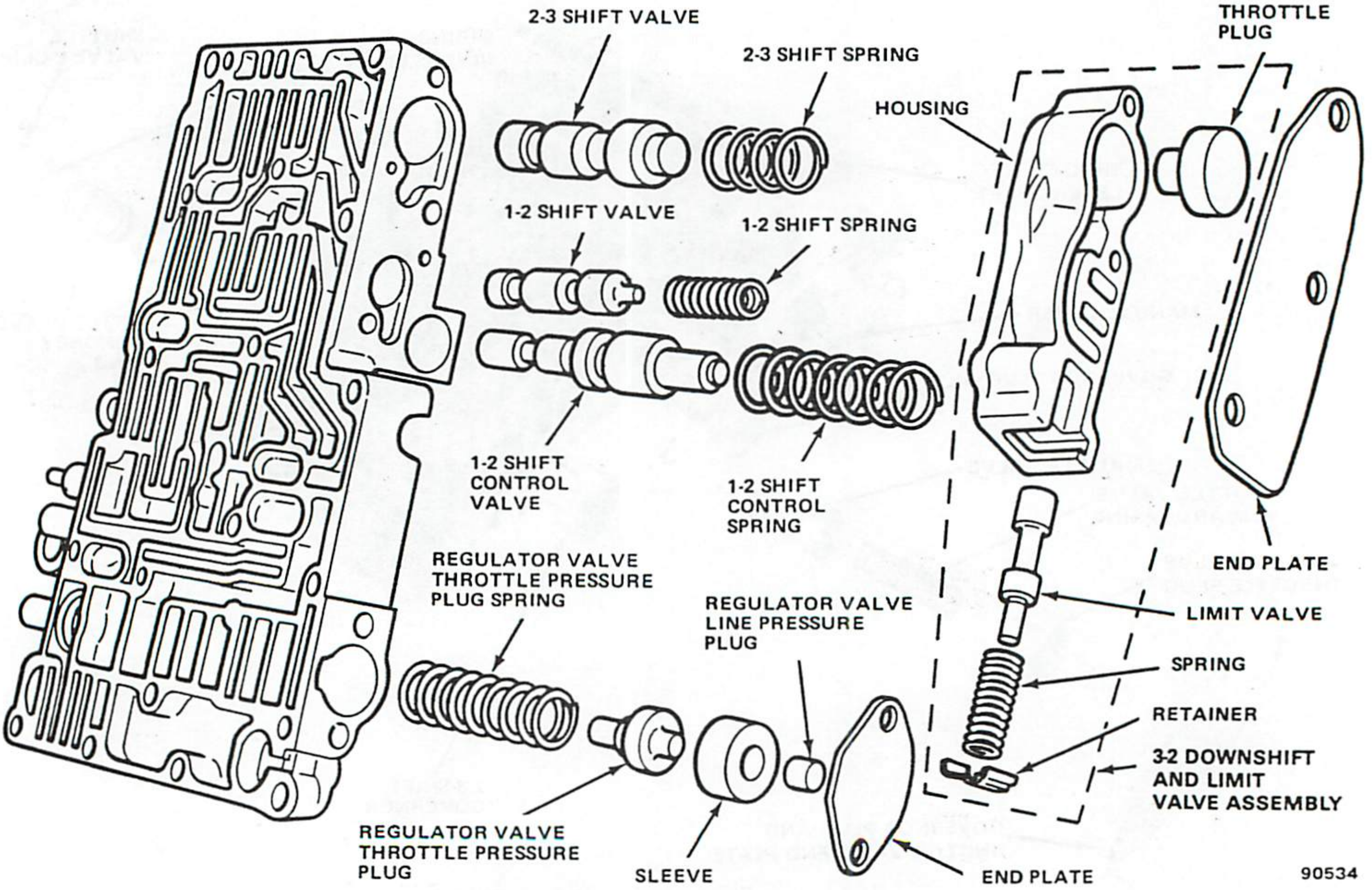

Fig. 2C-49 Shift Valves and Pressure Regulator Valves piece of glass and use very light pressure.

Be sure all metering holes in the separator plate and valve body are open. Use a penlight to inspect the bores in the valve body for corrosion, scores, burrs, scratches, pits, and other irregularities.

Inspect all valve springs for distortion or collapsed coils.

Inspect all valves and plugs for burrs, nicks, and scores. Remove slight irregularities using crocus cloth but do not round off the sharp edges. The sharpness of these edges is vitally important because it prevents foreign matter from lodging between the valve and the body bore.

Inspect all valves and plugs for freedom of operation in the valve body bores. When the bores, valves, and plugs are clean and dry, the valves and plugs fall freely in the bores. Make sure the orifice into the 1-2 shift control bore in the valve body is open (fig. 2C-43). Verify this by inserting a 1/32-inch (.79 mm) diameter drill through the orifice and into the 1-2 shift control bore.

NOTE: *A valve body that functioned properly when the vehicle was new will operate correctly after cleaning, reconditioning, assembly, and adjustment if:*

- *all mating surfaces are flat.*
- *bores, plugs, and valves are smooth.*
- *metering holes are open.*
- *springs are not damaged.*
- *valves and plugs slide freely in their bores.*

There is no need to replace a valve body unless it is damaged in handling.

Assembly

(1) Install 1-2 and 2-3 shift valves and springs, and 1-2 shift control valve and spring in valve body (fig. 2C-49).

(2) On model 727, assemble and install downshift housing assembly in following sequence:

(a) Install limit valve and spring.

(b) Slide spring retainer into groove.

(c) Insert throttle plug in bore.

(d) Position downshift housing end plate in housing and insert retaining screws.

(e) Position downshift housing assembly against shift valve springs. Be sure all springs are in proper alignment. Install and tighten retaining screws to 35 inch-pounds (4 N•m) torque.

(3) Install throttle valve, valve spring, kickdown valve and detent (fig. 2C-43).

(4) Install manual valve.

(5) Insert detent ball and spring in valve body. Install Retainer Tool J-24044 around detent ball casing to retain ball and spring (fig. 2C-48).

(6) Install throttle lever assembly (fig. 2C-43).

(7) Install manual lever assembly on throttle lever shaft. Position manual lever assembly so it engages manual valve and detent ball.

(8) Install seal, washer, and E-clip on throttle lever shaft.

(9) Remove detent ball retainer tool.

(10) Install 1-2 and 2-3 shift valve governor plugs (fig. 2C-47).

(11) Install shuttle valve, primary spring and throttle plug.

(12) Install governor plug end plate and tighten screws to 35 inch-pounds (4 N•m) torque.

(13) Install spring guides, shuttle valve secondary spring, and E-clip.

(14) Install shuttle valve cover plate (fig. 2C-47) and tighten screws to 35 inch-pounds (4 N•m) torque.

(15) Install check balls and spring in valve body (fig. 2C-45).

(16) Install rear clutch check ball in transfer plate and install pressure regulator valve screen in separator plate (fig. 2C-43).

(17) Position separator plate on transfer plate and stiffener plate on separator plate.

(18) Install stiffener and separator plate-to-transfer plate retaining screws. Tighten screws to 35 inch-pounds (4 N•m) torque.

(19) Position transfer plate assembly on valve body and install retaining screws finger-tight.

NOTE: *Before tightening retaining screws be sure the pressure regulator filter screen and 3/8-inch (10 mm) diameter check ball are properly aligned.*

(20) Starting at center and working outward, tighten transfer plate assembly retaining screws to 35 inch-pounds (4 N•m) torque.

(21) Install line pressure adjusting screw assembly on spring retainer bracket and position on valve body.

(22) Attach bracket to side of valve body and tighten retaining screws only after starting both the top and bottom bracket screws. Tighten screws to 35 inch-pounds (4 N•m) torque.

NOTE: *When installing retainer and bracket, be sure all parts are properly aligned before tightening the screws.*

(23) Install E-clip and park control rod on manual lever assembly.

(24) Install oil filter.

(25) Measure throttle and line pressure settings. Refer to In-Vehicle Service and Adjustment—Valve Body—Hydraulic Control Pressure Adjustments. Correct settings as required.

NOTE: *If pressures were satisfactory before disassembly, do not change line or throttle pressure adjusting screw settings.*

Accumulator Piston and Spring—Inspection

Inspect the piston for nicks, burrs, scores, and wear. Be sure the rings turn freely in the piston grooves.

Inspect the case bore for scores or other damage.

Inspect the spring for cracks or distortion. Replace damaged or worn parts.

Adapter Housing Bearing and Seal Replacement

(1) Remove seal from extension housing using screwdriver or punch.

(2) Remove snap rings and remove bearing from housing.

(3) Install replacement bearing in housing and install snap rings.

(4) Install replacement seal in housing. Seat seal flush with edge of seal bore in housing.

Park Lock Sprag

Disassembly

(1) Remove pivot shaft from adapter housing (fig. 2C-26).

(2) Remove park sprag and spring.

(3) Remove snap ring and reaction plug and pin assembly from housing.

Inspection

Inspect the pivot shaft for scores and free movement in the housing and sprag. Inspect the control rod and sprag springs for distortion and loss of tension. Inspect the sprag and gear for cracks and broken edges on the engagement lugs. Inspect the knob at the end of the control rod for excessive wear, nicks, burrs, and free turning.

If necessary, replace the park gear as outlined under Governor and Support—Disassembly and Assembly.

Assembly

(1) Install reaction plug and pin assembly in housing and install snap ring.

(2) Install sprag and spring in housing.

NOTE: *The square lug on the sprag must face the park gear.*.

(3) Position spring so it moves sprag away from gear.

(4) Install pivot pin.

Governor

Disassembly

(1) Remove large snap ring from weight end of governor body (fig. 2C-25).

(2) Remove weight assembly.

(3) Remove snap ring from governor weight assembly.

(4) Separate inner weight, spring, and outer weight.

NOTE: *If park gear or governor body are to be replaced, straighten the lock tabs and remove the four attaching bolts.*

Inspection

Thoroughly clean and dry all governor parts and check for free movement. Do not use a caustic cleaning solution.

The weights and valve should fall freely in their bores when clean and dry. Rough surfaces and burrs may be polished with crocus cloth.

Inspect the governor weight spring for distortion.

Inspect the park gear and governor support for chipped or worn gear teeth and damaged ring grooves.

Clean the filter in solvent and air dry. Replace it if damaged or defective.

Assembly

(1) If governor body was separated from park gear, assemble parts and install attaching bolts finger-tight.

NOTE: *The bolts must not be tightened to specified torque until the assembly is installed on the output shaft.*

(2) Install governor weights and spring in outer weight, and install snap ring.

(3) Install weight assembly into body.

(4) Install snap ring.

Oil Pump and Reaction Shaft Support—Model 999

Disassembly

(1) Remove bolts attaching pump to support and remove support.

(2) Mark pump rotors with chalk for assembly reference.

(3) Remove rotors (fig. 2C-50).

(4) Remove O-ring seal using blunt punch.

(5) Remove front clutch seal rings from support.

Inspection

Inspect the front clutch seal ring grooves for burrs, nicks, or cracked edges. Inspect the front clutch retainer-to-reaction shaft support thrust washer for wear. The washer should be 0.043 to 0.045 inch (1.09 to 1.14 mm) thick. Inspect all machined surfaces on the pump housing and support for nicks and burrs. Inspect the pump body and reaction shaft support bushings for wear and scores. Inspect the pump rotors for scores or pits.

Install the pump rotors in the pump body. Place a straightedge across the rotor faces and pump body. Using a feeler gauge, measure the clearance between the straightedge and pump rotors. Clearance limits are

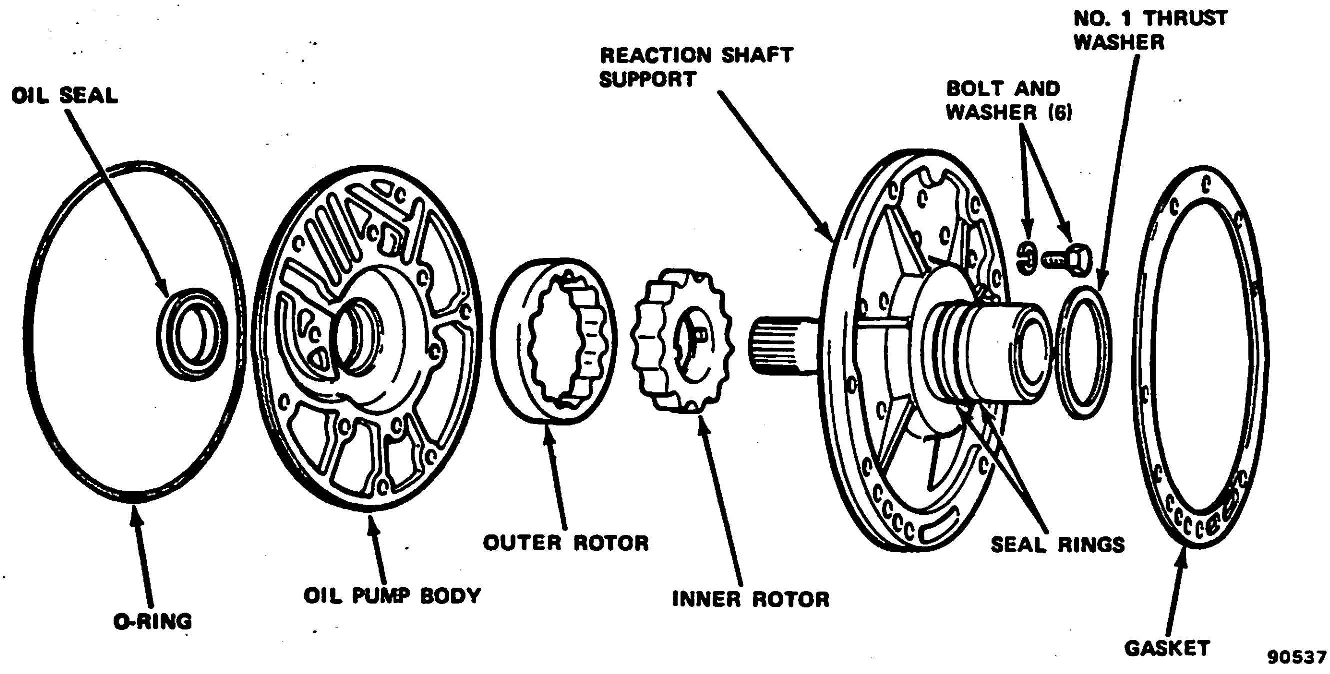

Fig. 2C-50 Oil Pump Assembly—Model 999

0.001 to 0.003 inch (0.02 to 0.07 mm) (fig. 2C-51).

Position the inner and outer rotors so that the center of one tooth on each rotor is aligned. Measure the clearance between the tips of the teeth. Make four measurements. Rotate the inner rotor approximately 1/4 turn (90°) between measurements. Rotor tip clearance should be 0.005 to 0.010 inch (0.13 to 0.25 mm) (View A, fig. 2C-52).

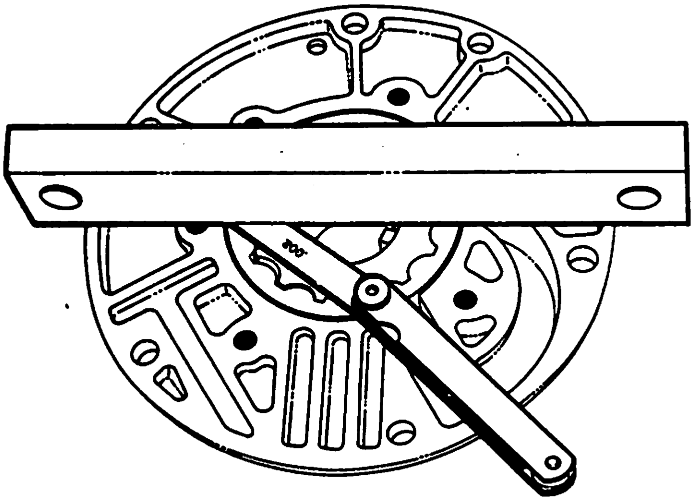

Fig. 2C-51 Measuring Pump Rotor End Clearance—Model 999

Measure the clearance between the outer surface of the outer rotor and the pump bore. The clearance should be 0.004 to 0.008 inch (0.10 to 0.20 mm) (View B, fig. 2C-48).

Pump Bushing Replacement

(1) Position pump housing, with reaction shaft support mating surface facing downward, on flat, level surface.

(2) Remove bushing using Remover and Installer Tool J-24049 and Driver Handle J-8092 (fig. 2C-53).

NOTE: *Be careful to keep the tool straight in the bore during removal.*

(3) Position replacement bushing on Installer Tool J-24049.

(4) Turn pump housing over and install bushing straight into housing until edge of bushing is flush with bore (fig. 2C-54).

(5) Stake bushing in two places (to retain it) using blunt punch (fig. 2C-55).

(6) Use knife, with narrow blade only, to remove burrs or high points at stake points (fig. 2C-55). Do not use file or other tool that will remove more metal than is necessary.

Reaction Shaft Bushing Replacement

NOTE: *If the reaction shaft bushing requires replacement, be sure to inspect the support for wear at the input shaft and rear clutch retainer seal ring lands. If the lands are worn or grooved, replace the entire support assembly.*

CAUTION: *Do not clamp any part of the reaction shaft or support in a vise.*

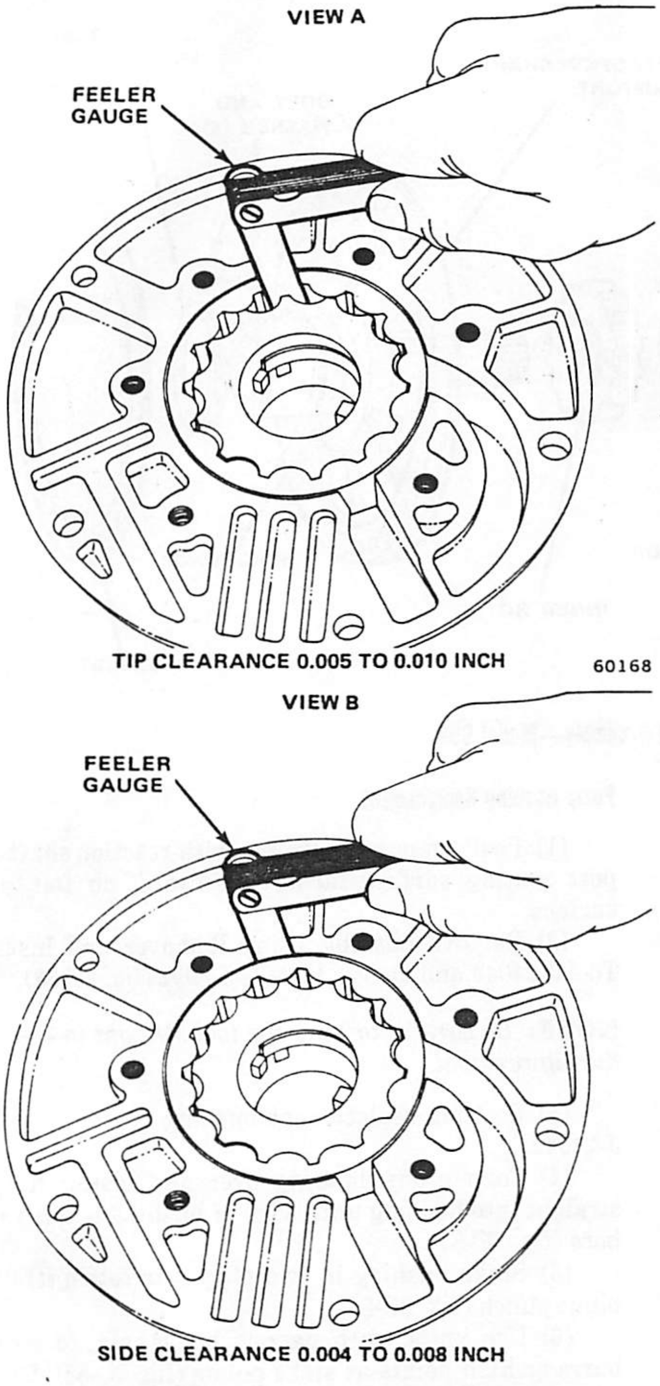

Fig. 2C-52 Measuring Rotor Clearance—Model 999

(1) Thread Bushing Remover Tool J-24036 straight into bushing as far as possible by hand (fig. 2C-56).

(2) Using wrench, thread remover tool into bushing three or four additional turns to fully engage threads of tool in bushing.

(3) Install Slide Hammer Tools J-7004-3 and J-6585-1 in remover tool (fig. 2C-56).

(4) Bump outward with slide hammers to remove bushing.

(5) Clean chips from reaction shaft support assembly.

(6) Grip old bushing with pliers and remove it from Tool J-24036.

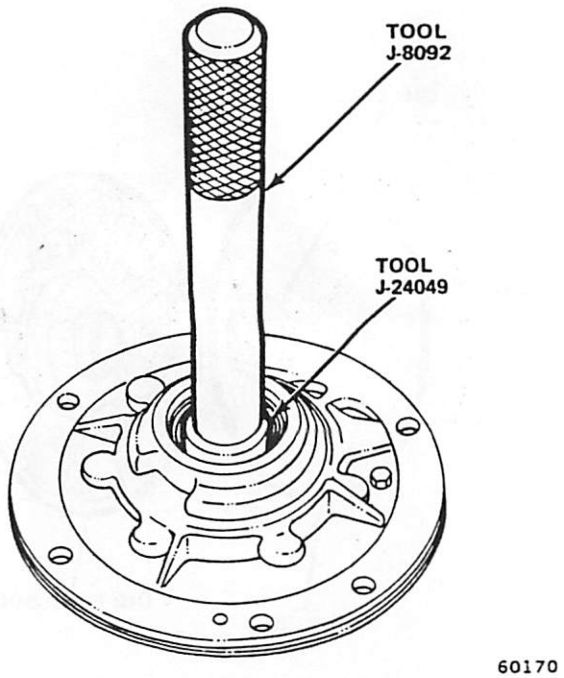

Fig. 2C-53 Pump Bushing Removal—Model 999

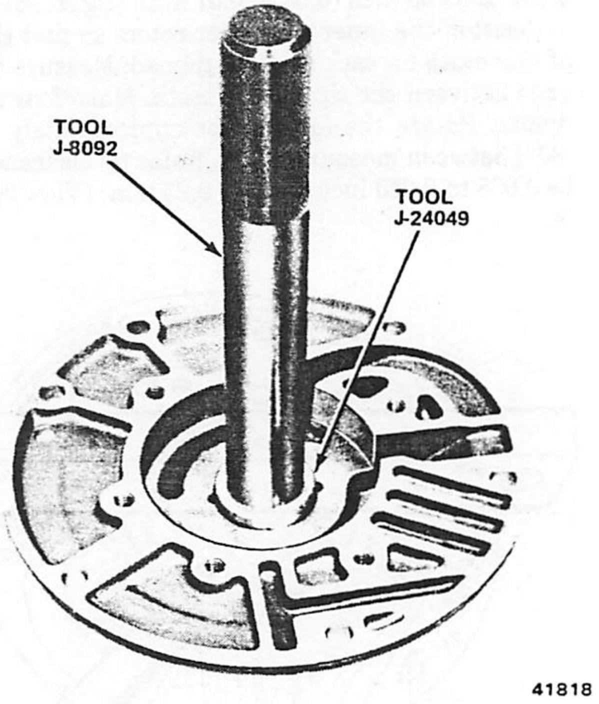

Fig. 2C-54 Pump Bushing Installation—Model 999

CAUTION: *Be sure to protect the remover tool threads when using the tool.*

(7) Thread Bushing Installer Tool J-24032 onto Driver Handle J-8092 (fig. 2C-57).

(8) Position replacement bushing on installer tool and install bushing straight into shaft bore until tool bottoms (fig. 2C-57).

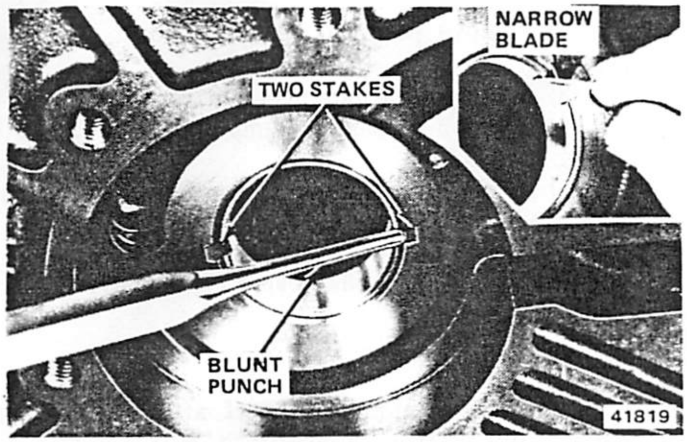

Fig. 2C-55 Staking Oil Pump Bushing

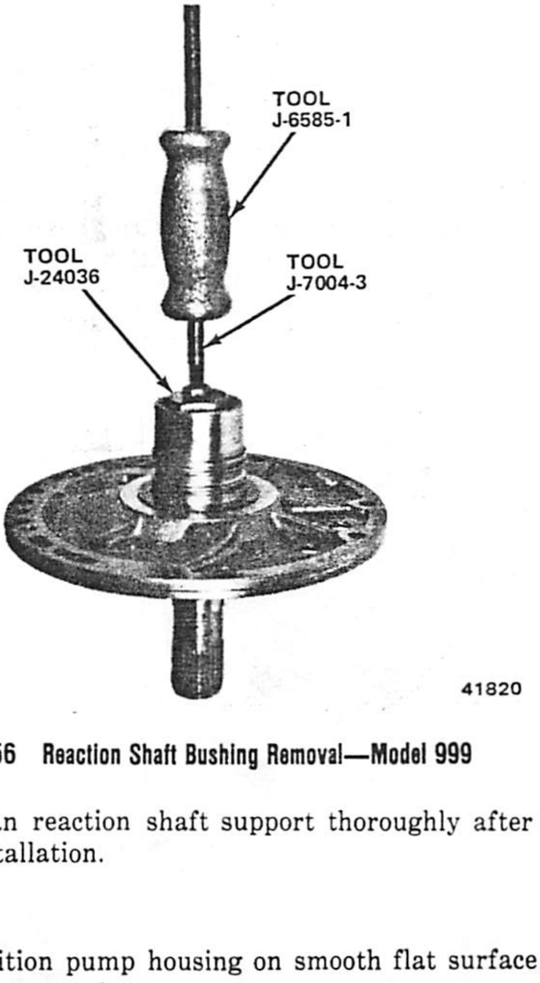

Fig. 2C-56 Reaction Shaft Bushing Removal—Model 999

(9) Clean reaction shaft support thoroughly after bushing installation.

Assembly

(1) Position pump housing on smooth flat surface and install pump rotors.

NOTE: *New rotors may be installed with either face up. Used rotors must be installed as removed. Refer to reference chalk marks made during disassembly.*

(2) Align and install reaction shaft support on pump housing and finger-tighten attaching bolt.

(3) Insert two Slide Hammers J-6585-1 and Bolts J-7004-3, from back to front, into threaded reaction shaft support holes (fig. 2C-58). Bolts should be threaded into support until ends of bolts are 1/16-inch (1.6 mm) below front machined surface of pump housing.

(4) Install one Pilot Stud Tool J-3387-2 into case pump opening (fig. 2C-59).

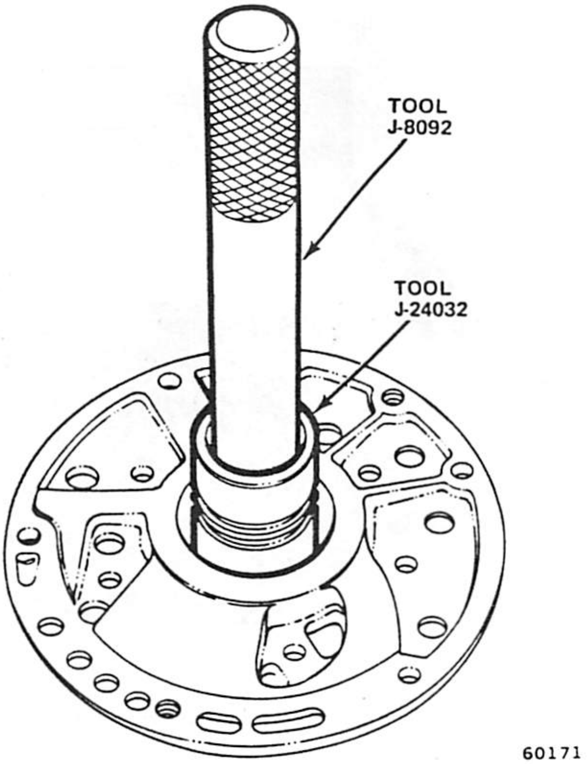

Fig. 2C-57 Reaction Shaft Bushing Installation—Model 999

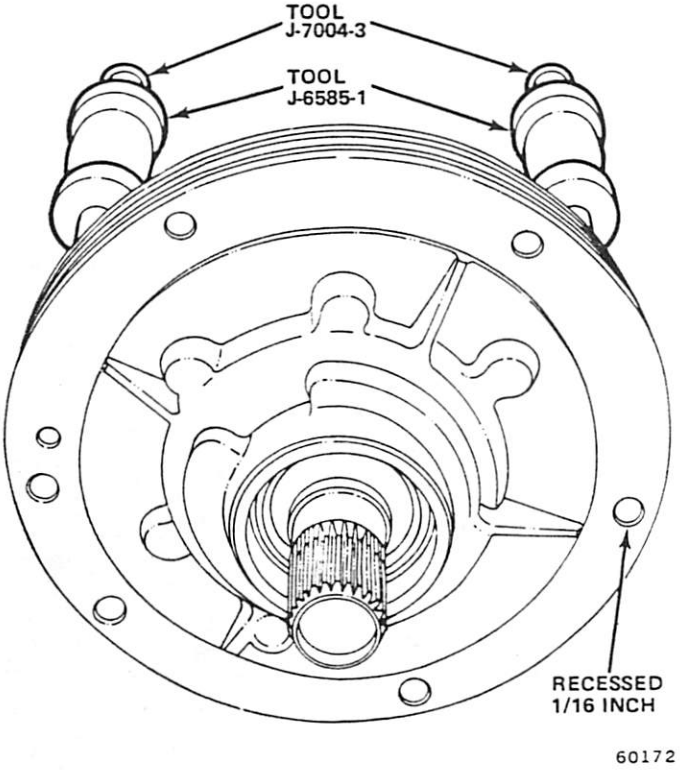

Fig. 2C-58 Installing Slide Hammer Bolts

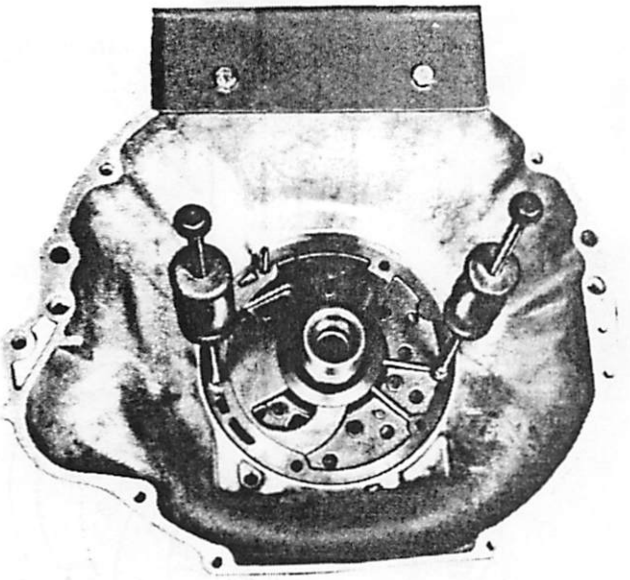

Fig. 2C-59 Pump Alignment—Model 999

(5) Install pump assembly **backward** into case opening. Tap pump gently to seat it in case.

(6) Tighten bolts attaching reaction shaft support to pump housing to 160 inch-pounds (19 N•m) torque.

(7) Remove pump and reaction shaft support assembly from case.

(8) Remove slide hammer tools from pump.

(9) Position oil seal in pump housing with seal lip facing inward.

(10) Install seal using Installer Tool J-9617. Install seal into housing until tool bottoms.

Oil Pump and Reaction Shaft Support—Model 727

Disassembly

(1) Remove pump-to-support attaching bolts and remove support from pump (fig. *2C-60*).

(2) Mark rotors with chalk for assembly alignment reference.

(3) Remove rotors

(4) Remove O-ring seal.

(5) Remove O-ring seal from pump body flange.

(6) Remove front oil seal using blunt punch.

(7) Remove front clutch seal rings from support.

Inspection

Inspect the front clutch seal ring grooves for burrs, nicks, or cracked edges. Inspect all machined surfaces on the pump housing for nicks and burrs. Inspect the pump body and reaction shaft support bushings for wear and

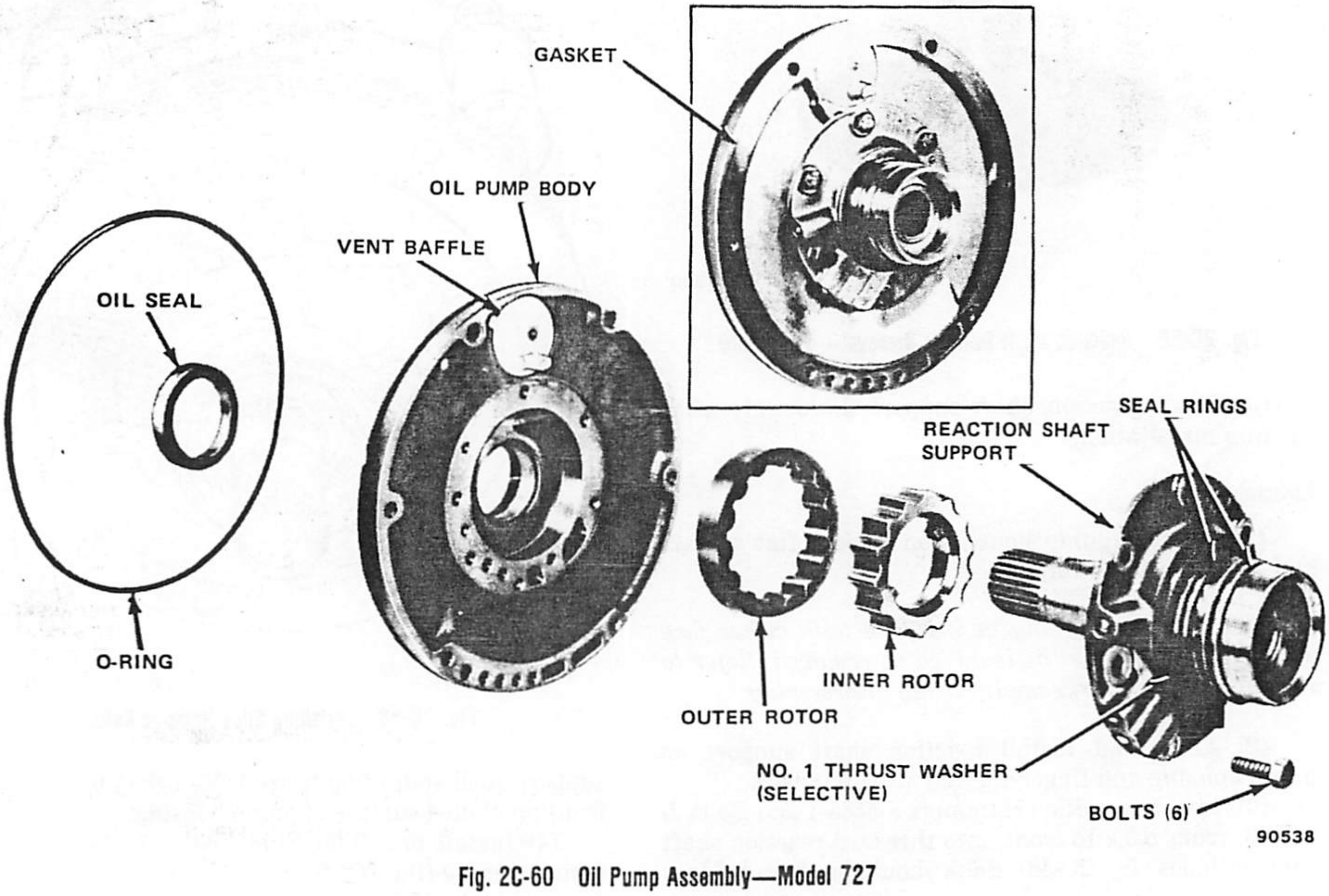

Fig. 2C-60 Oil Pump Assembly—Model 727

scores. Inspect the pump rotors for scores and pits.

Install the pump rotors in the pump body. Position a straightedge across the rotor faces and pump body and use a feeler gauge to measure the clearance between the straightedge and rotors. Clearance limits are 0.001 to 0.003 inch (0.02 to 0.07 mm) (fig. 2C-61).

Position the inner and outer rotors so that the center of one tooth on each rotor is aligned and measure the clearance between the tips of the teeth. Make four measurements. Rotate the inner rotor approximately 1/4 turn (90°) between measurements. Rotor tip clearance should be 0.005 to 0.010 inch (0.13 to 0.20 mm) (View A, fig. 2C-62).

Measure the clearance between the outer surface of the outer rotor and the pump bore. Clearance should be 0.004 to 0.008 inch (0.10 to 0.20 mm) (View B, fig. 2C-62).

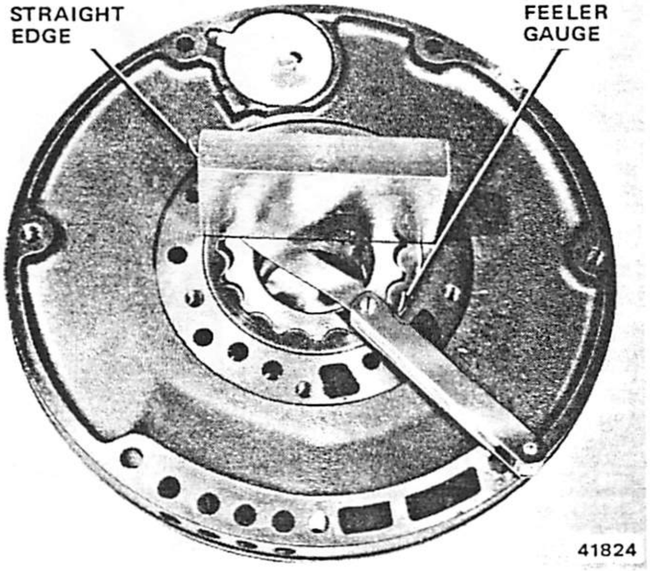

Fig. 2C-61 Measuring Rotor End Clearance—Model 727

Pump Bushing Replacement

(1) Place pump housing, with reaction shaft support mating surface facing downward, on flat, level surface.

(2) Remove bushing using Remover/Installer Tool J-24055 and Driver Handle J-8092 (fig. 2C-63).

(3) Install replacement bushing on Remover/Installer Tool J-24055 (fig. 2C-64).

(4) Turn pump housing over and install bushing straight into housing until edge of bushing is flush with bore.

(5) Stake bushing in two places to retain it using blunt punch (fig. 2C-55).

(6) Use knife, with narrow blade only, to remove burrs or high spots at stake points.

NOTE: *Do not use a file or similar tool that might remove more metal than is necessary.*

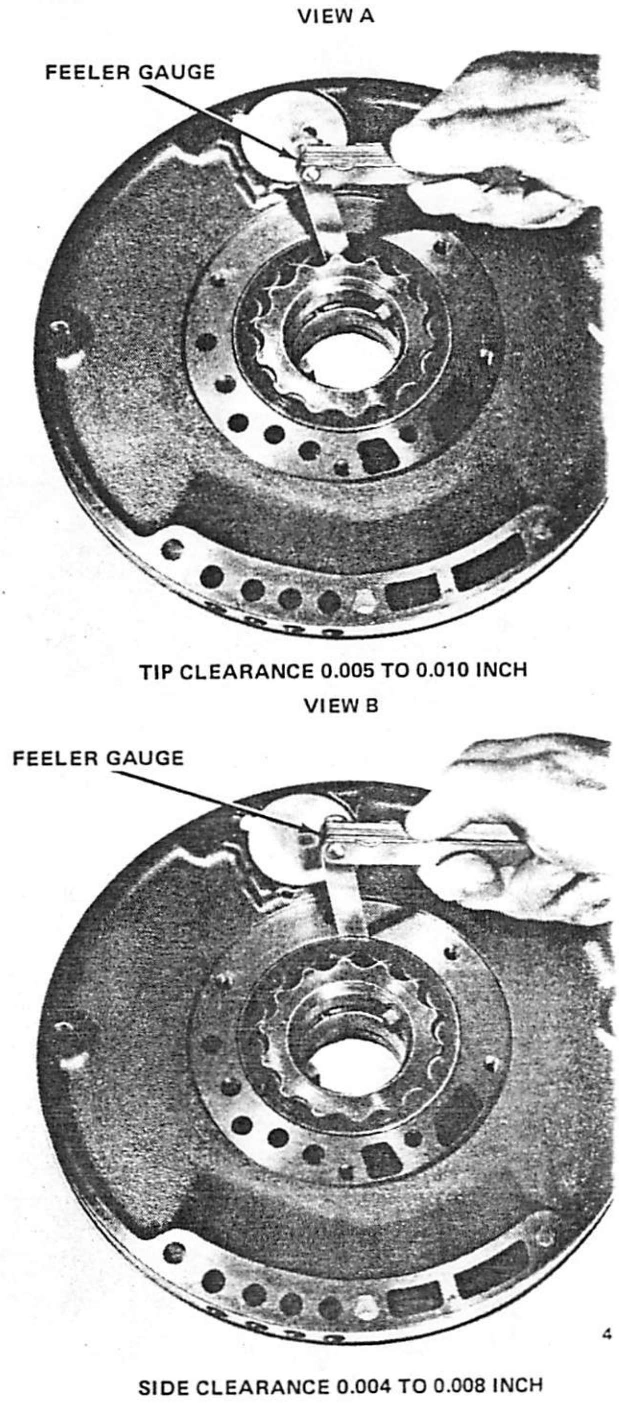

Fig. 2C-62 Measuring Rotor Clearance—Model 727 (View A and View B)

(7) Clean pump housing thoroughly after bu installation.

Reaction Shaft Bushing Replacement

NOTE: *If the reaction shaft bushing requires rep ment, also inspect the shaft and support bore for caused by the input shaft seal ring lands. If the b worn or grooved, replace the entire support assem*

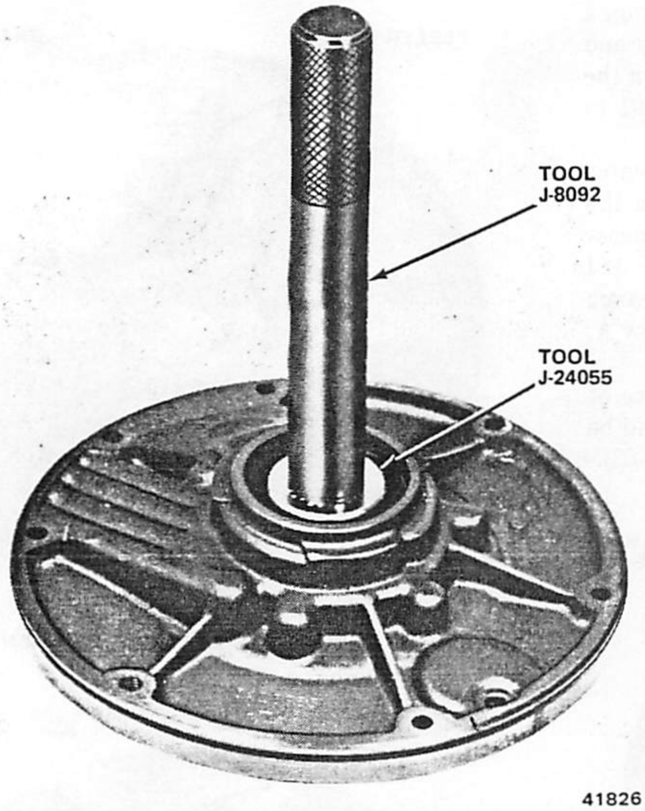

Fig. 2C-63 Pump Bushing Removal—Model 727

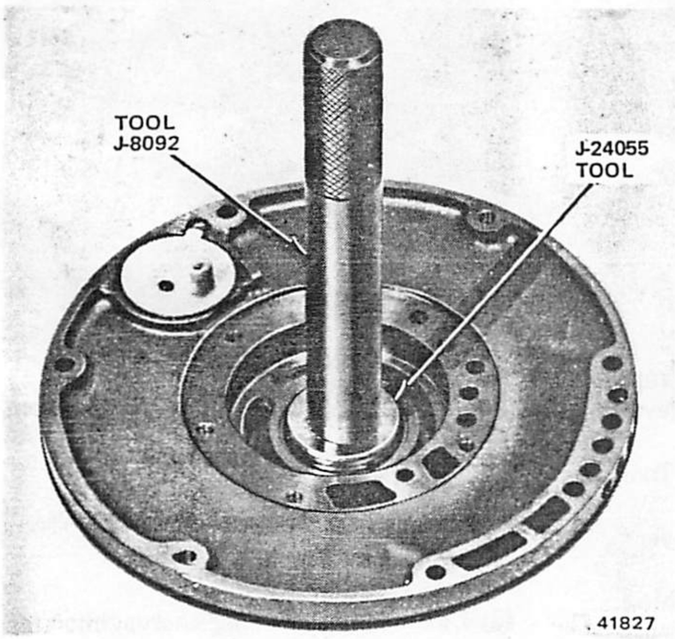

Fig. 2C-64 Pump Bushing Installation—Model 727

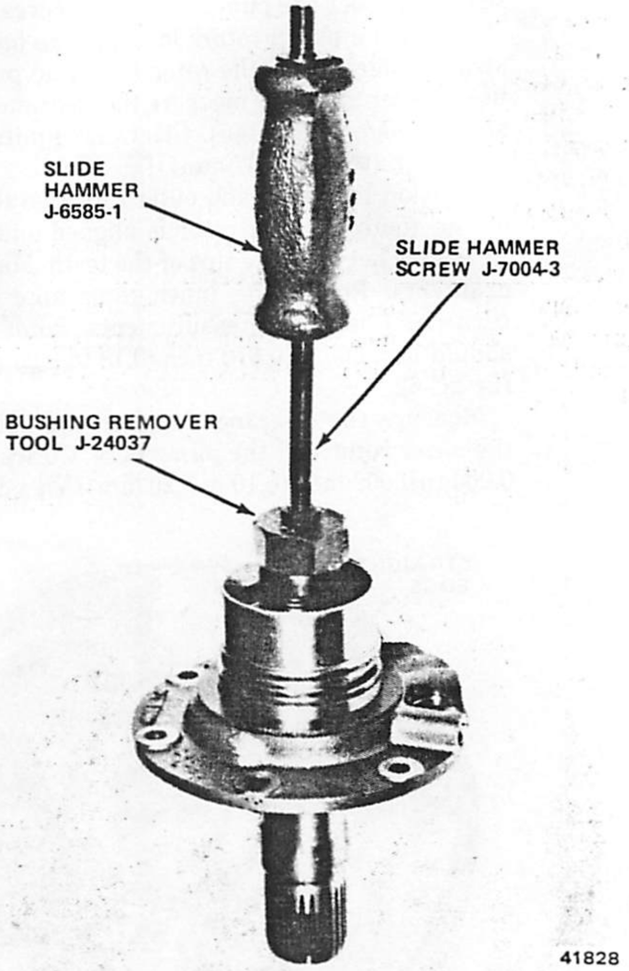

Fig. 2C-65 Reaction Shaft Bushing Removal—Model 727

CAUTION: *Do not clamp any part of the reaction shaft or support in a vise.*

(8) Thread Bushing Remover Tool J-24037 into bushing as far as possible by hand (fig. 2C-65).

(9) Using wrench, thread remover tool into bushing three to four additional turns to fully engage threads of tool in bushing.

(10) Install Slide Hammer Bolts Tool J-7004-3 and J-6585-1 into remover tool (fig. 2C-65). Bump outward with slide hammers to remove bushing.

(11) Thoroughly clean reaction shaft support assembly after bushing removal.

(12) Grip old bushing with pliers and remove it from Tool J-24037.

NOTE: *Be sure to protect the threads on the remover tool when using the tool.*

(13) Thread Bushing Installer Tool J-24038 onto Driver Handle J-8092 (fig. 2C-66).

(14) Position replacement bushing on installer tool and install bushing straight into shaft bore until tool bottoms.

Assembly

(1) Install pump rotors in housing.

(2) Install reaction shaft support and tighten attaching bolts to 160 inch-pounds (18 N•m) torque.

(3) Install O-ring seal around pump housing flange.

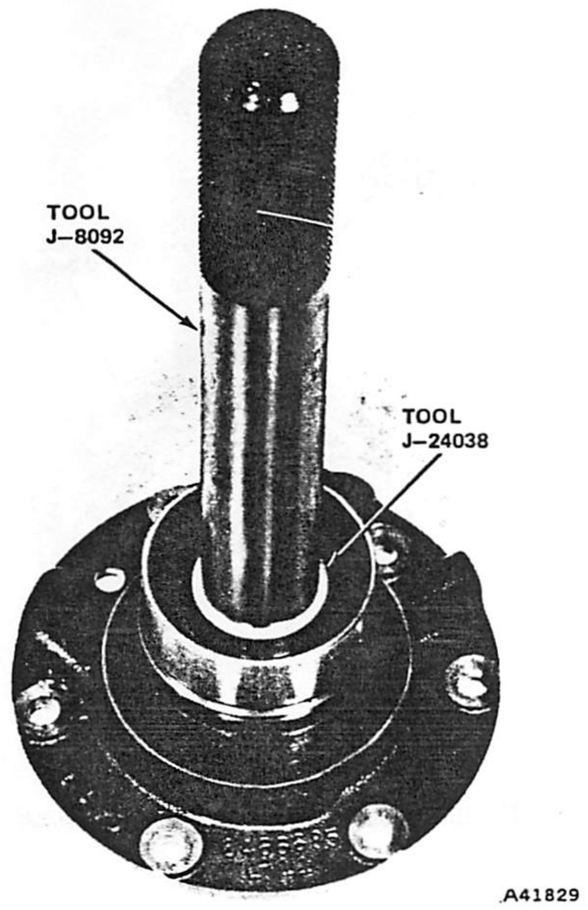

Fig. 2C-66 Reaction Shaft Bushing Installation—Model 727

(4) Install oil seal pump housing with seal lip facing inward.

(5) Install oil seal on Installer Tool J-21005. Install seal straight into housing until tool bottoms.

(6) Thoroughly clean reaction shaft support assembly.

Front Clutch—Model 999

Disassembly

(1) Remove large waved snap ring which secures pressure plate in clutch retainer (fig. 2C-67).

(2) Install Spring Compressor Tool J-5886-01 over piston spring retainer (fig. 2C-68).

(3) Compress piston springs and remove snap ring.

(4) Release compressor tool slowly until spring retainer is free of hub.

NOTE: *When releasing the compressor tool, do not allow the spring retainer to stick or bind in the snap ring groove.*

(5) Remove tool, retainer and spring.

(6) Turn clutch retainer over and bump on wood block to dislodge and remove piston.

(7) Remove seal rings from piston and clutch retainer hub.

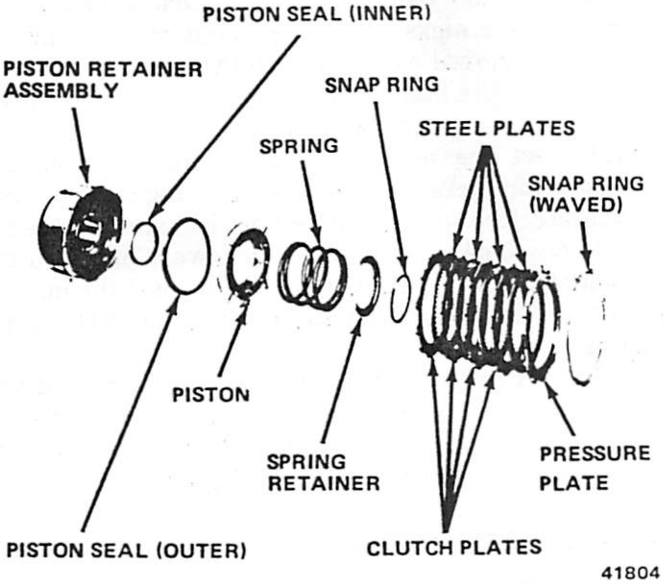

Fig. 2C-67 Front Clutch Assembly—Model 999

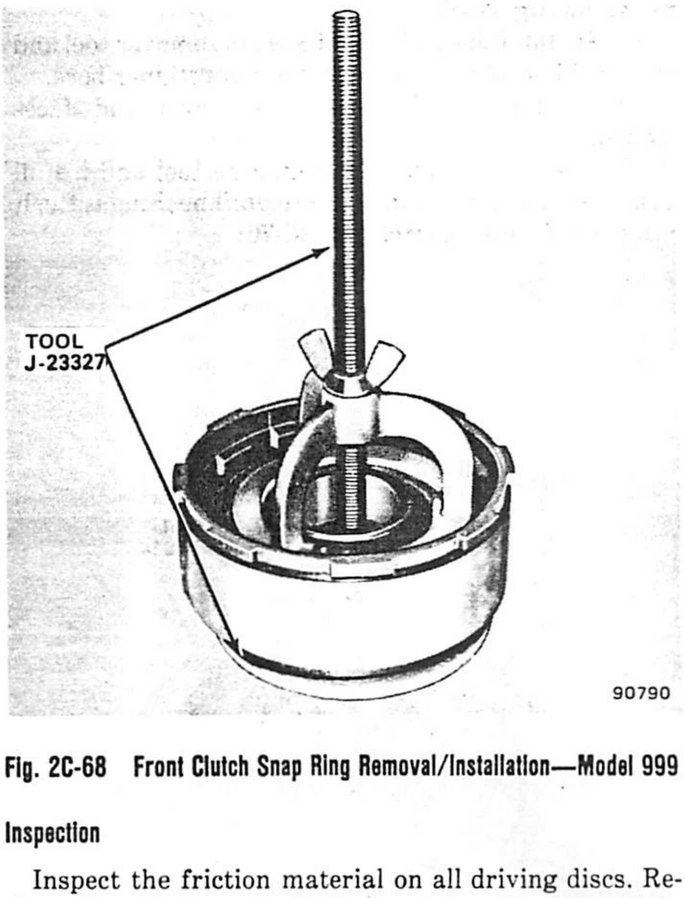

Fig. 2C-68 Front Clutch Snap Ring Removal/Installation—Model 999

Inspection

Inspect the friction material on all driving discs. Replace discs that are charred, glazed, heavily pitted, flaking or if the friction material can be scraped off easily.

Inspect the steel plates and pressure plate surfaces for overheating, scoring, and for damaged driving lugs. Replace any worn, damaged parts.

Inspect the steel plate lug grooves in the clutch retainer for smooth surfaces. The plates must slide freely in the grooves.

Inspect the band application surface on the clutch retainer for nicks and scores. Light scratches and nicks can be removed with crocus cloth.

Inspect the ball check in the clutch retainer. The ball should move freely in its cage.

Inspect the seal ring surfaces inside the clutch retainer for nicks or deep scratches. Light scratches will not interfere with sealing of the rings. Inspect the clutch retainer bushing for scores and wear and inspect the inner bore surface for wear and inspect the inner bore surface for wear from the reaction shaft support seal rings and lands.

Inspect the inside of the piston bore for score marks. Remove light scores with crocus cloth. Inspect the seal ring grooves for nicks and burrs. Inspect the piston spring, retainer, and snap ring for distortion.

Retainer Bushing Replacement

(1) Place clutch retainer, with open end facing down, on a clean, smooth surface.

(2) Insert Bushing Remover/Installer Tool J-24064 in bushing (fig. 2C-69).

(3) Install Driver Handle J-8092 in remover tool and drive bushing straight down and out of retainer bore.

(4) Position clutch retainer so open end faces upward.

(5) Install replacement bushing on tool and install bushing straight into retainer bore until bushing is flush with base of bore chamfer (fig. 2C-70).

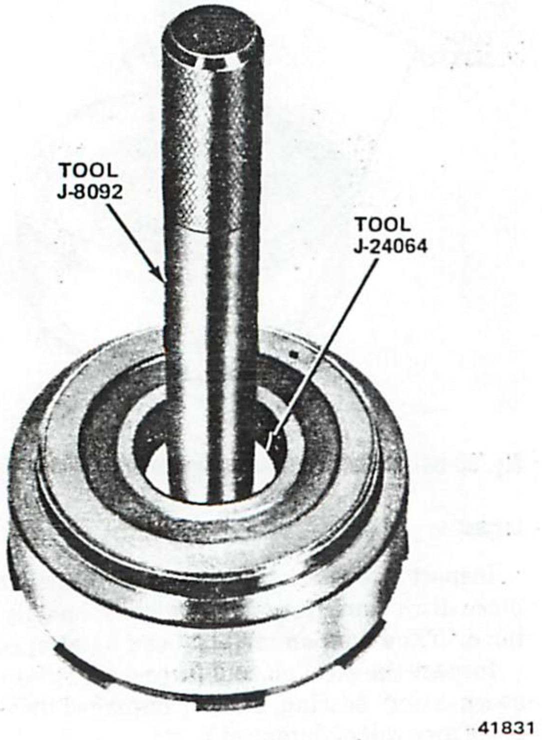

Fig. 2C-69 Clutch Retainer Bushing Removal—Model 999

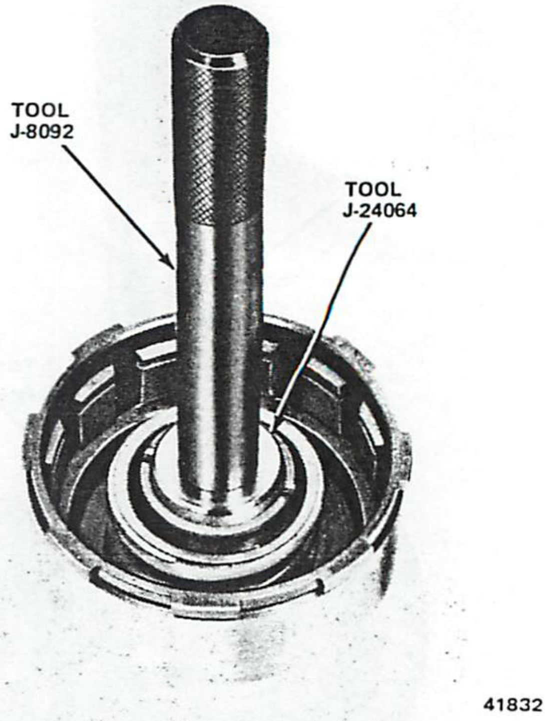

Fig. 2C-70 Clutch Retainer Bushing Installation—Model 999

Assembly

(1) Lubricate inner seal with petroleum jelly and install seal on hub of clutch retainer.

NOTE: *Be sure the seal lip is facing into the piston bore and that the seal is properly seated in the retainer groove.*

(2) Lubricate outer seal with petroleum jelly and install it on clutch piston so seal lip faces into piston bore.

(3) Install piston assembly in retainer using a twisting motion to seat piston at bottom of bore.

(4) Install spring on piston hub and spring retainer.

(5) Install snap ring over spring.

(6) Install Spring Compressor Tool J-5886-01 over retainer assembly.

(7) Compress spring and seat snap ring in clutch hub groove.

(8) Remove compressor tool.

(9) Lubricate clutch plates and discs with transmission fluid.

(10) Install one steel plate followed by a lined plate until proper number of plates are installed.

(11) Install pressure plate and waved snap ring.

NOTE: *Be sure snap ring is completely seated in groove.*

(12) Measure clutch pack clearance using feeler gauge.

(13) Insert gauge between pressure plate and snap ring (fig. 2C-71). Refer to Clutch Plate Clearance in Specifications for tolerances.

(14) If clutch plate clearance is not within specifications, disassemble clutch pack and measure thickness of line plate, steel plates and pressure plate. Thickness should be as follows:

Lined Plate	0.083 to 0.088 inch (2.11 to 2.24 mm)
Steel Plate..........	0.066 to 0.071 inch (1.68 to 1.80 mm)
Pressure Plate	0.214 to 0.218 inch (5.44 to 5.54 mm)

Any component not meeting the listed thickness specification must be replaced in order to obtain the correct clutch pack clearance.

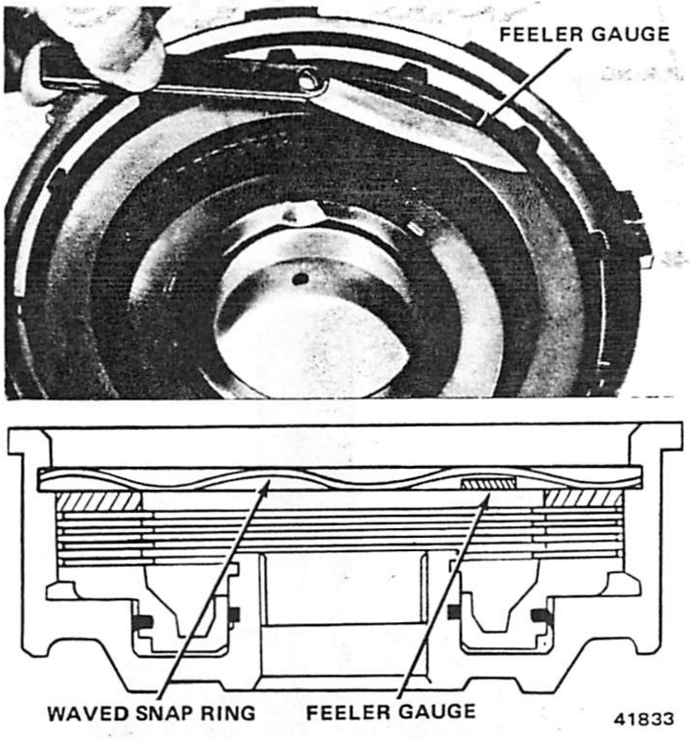

Fig. 2C-71 Measuring Front Clutch Pack Clearance

Front Clutch—Model 727

Disassembly

(1) Remove large waved snap ring that retains pressure plate in clutch piston retainer (fig. 2C-72).

(2) Remove pressure plate and clutch plates.

(3) Install Compressor Tool J-24042 over piston spring retainer (fig. 2C-73).

(4) Compress springs and remove snap ring.

(5) Slowly release compressor tool until spring retainer is free of hub.

NOTE: *Do not allow the spring retainer to stick or bind in the snap ring groove.*

(6) Remove compressor tool, retainer and springs.

(7) Turn clutch retainer over and bump on wood block to dislodge and remove piston.

(8) Remove seals from piston and retainer hub.

Inspection

Inspect the friction material on all driving discs. Replace discs that are charred, glazed, heavily pitted, flaking, or if the friction material can be scraped off easily. Inspect internal splines for wear or other damage.

Inspect the steel plates and pressure plate surfaces for overheating, scoring, and damaged driving lugs and replace as necessary.

Inspect the steel plate lug grooves in the clutch retainer for smooth surfaces. The plates must slide freely in the grooves.

Inspect the band application surface on the clutch retainer for nicks and scores. Remove light scratches and nicks with crocus cloth.

Inspect the check ball in the clutch retainer. The ball should move freely in its cage.

Inspect the seal ring surface inside the clutch retainer for nicks or deep scratches. Light scratches will not interfere with sealing of the rings. Inspect the clutch retainer bushing for scores and wear from the reaction shaft support sealing rings and lands.

Inspect the inner bore of the piston for score marks. Remove light scores with crocus cloth. Inspect the seal ring grooves for nicks and burrs. Inspect the piston springs, retainer, and snap ring for distortion.

Retainer Bushing Replacement

(1) Place clutch retainer, with open end facing downward, on clean, smooth surface.

(2) Insert Bushing Remover/Installer Tool J-24039 in bushing (fig. 2C-74).

(3) Install Drive Handle J-8092 in tool and tap bushing straight down and out of bore.

(4) Position clutch retainer so open end faces upward.

(5) Install replacement bushing on Tool J-24039 and install bushing straight into retainer bore until bushing is flush with base of bore chamfer (fig. 2C-75).

Assembly

(1) Lubricate inner seal with petroleum jelly and install it on hub of clutch retainer.

NOTE: *Be sure the seal lip faces into the piston bore and is properly seated in the seal groove.*

(2) Lubricate outer seal with petroleum jelly and install it on clutch piston with seal lip facing into piston bore.

(3) Install piston assembly in retainer and carefully seat piston at bottom of retainer bore.

(4) Install clutch piston springs on piston (fig. 2C-76). Install nine or eleven springs in clutch (according to original number in clutch).

(5) Install spring retainer and snap ring over springs.

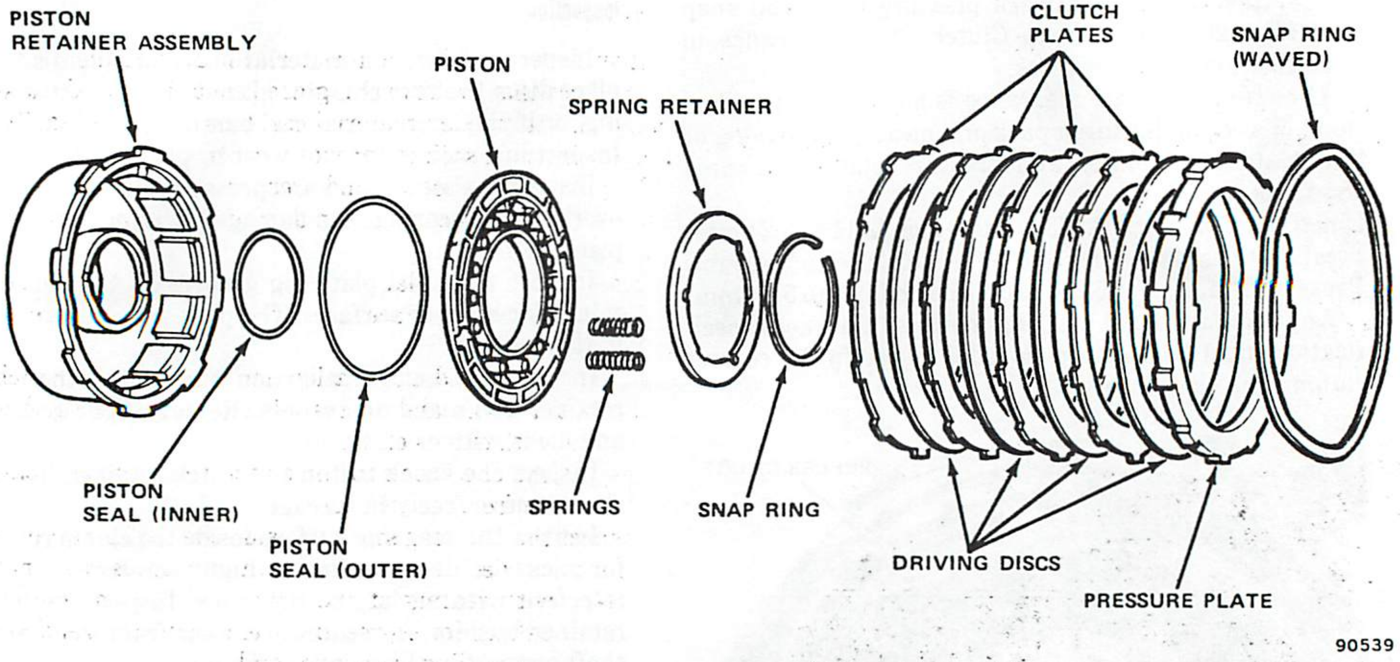

Fig. 2C-72 Front Clutch Assembly—Model 727

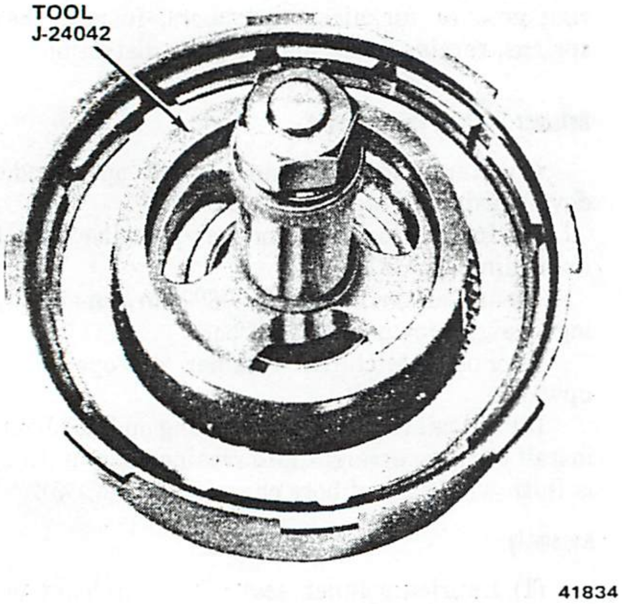

Fig. 2C-73 Front Clutch Spring Retainer Removal/Installation—Model 727

(6) Install Compressor Tool J-24042 over retainer assembly.

(7) Compress springs and seat snap ring in hub groove.

(8) Remove compressor tool.

(9) Lubricate clutch plates with transmission fluid.

(10) Install one steel plate followed by one lined plate until correct number of plates are installed.

(11) Install pressure plate and waved snap ring. Measure clutch pack clearance using feeler gauge (fig. 2C-71). Refer to clutch plate clearance in Specifications section for tolerances.

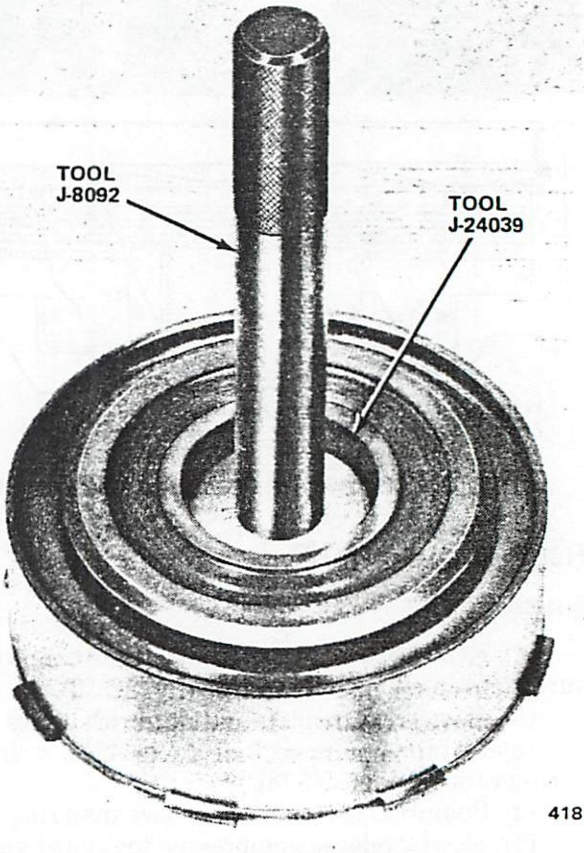

Fig. 2C-74 Front Clutch Retainer Bushing Removal—Model 727

(12) If clutch pack clearance is not within specifications, disassemble clutch pack and measure thickness of lined plates, steel plates, and pressure plate. Thickness should be as follows:

Lined Plate	0.090 to 0.095 inch (2.29 to 2.41 mm)
Steel Plate	.060 to 0.071 inch (1.52 to 1.80 mm)
Pressure Plate	0.278 to 0.282 inch (7.06 to 7.16 mm)

Any component not meeting listed thickness specification must be replaced in order to obtain correct clutch pack clearance.

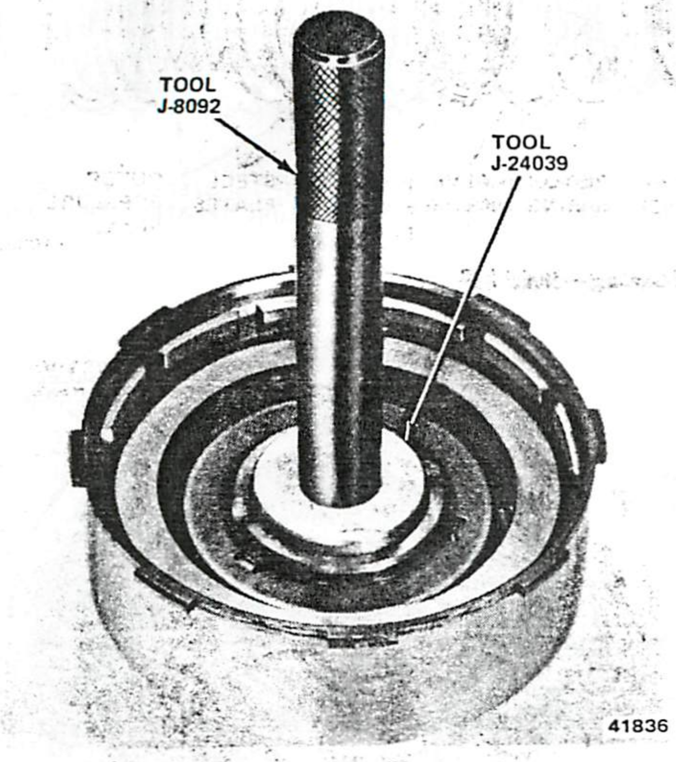

Fig. 2C-75 Front Clutch Retainer Bushing Installation—Model 727

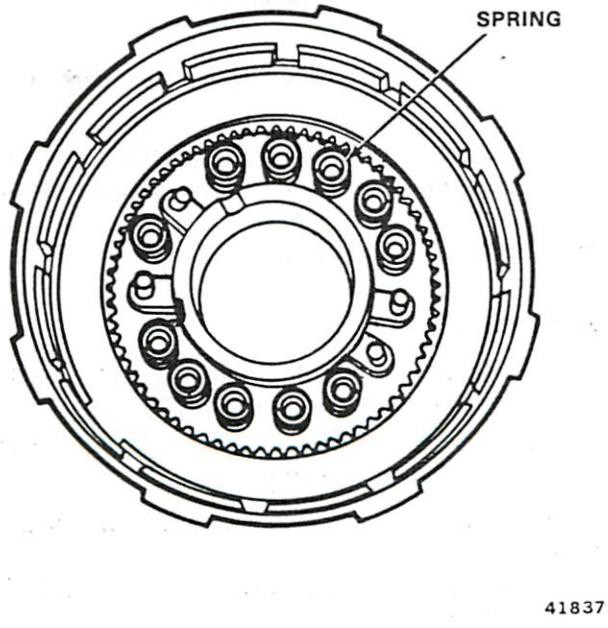

Fig. 2C-76 Front Clutch Piston Spring Location

Rear Clutch—Models 999

Disassembly

(1) Remove large snap ring that retains pressure plate in clutch piston retainer (fig. 2C-77).

NOTE: *This is a selective thickness snap ring and determines clutch pack clearance.*

(2) Lift pressure plate, clutch plates, and inner pressure plate out of retainer.

(3) Remove wave spring and clutch piston spring.

(4) Turn retainer over and bump it on wood block to remove piston.

(5) Remove piston seals.

NOTE: *If necessary, remove snap ring and press input shaft out of retainer.*

Inspection

Inspect the friction material on the driving discs. Replace discs that are charred, heavily pitted, flaking or if the driving disc inner splines are worn or damage.

Inspect the steel plates and pressure plate surfaces for overheating, scoring, and for damaged drive lugs. Inspect all discs and plates for flatness. Replace if necessary.

Inspect the steel plate lug grooves in the clutch retainer for smooth surfaces. The plates must slide freely in these grooves. Inspect the clutch piston ball check. The ball should move freely in its cage. Inspect the seal ring surfaces in the clutch retainer for nicks or deep scratches. Light scratches will not interfere with sealing. Inspect the piston spring and wave spring for distortion or breakage.

Inspect the seal ring grooves in the input shaft and piston retainer for nicks, burrs, and wear.

Inspect the rear clutch to front clutch thrust washer. The washer should be 0.043 to 0.045 inch (1.09 to 1.14 mm) thick.

Assembly

(1) Press input shaft into piston retainer (if removed) and install snap ring.

(2) Lubricate and install inner and outer seal rings on clutch piston.

NOTE: *Be sure that the lips of the seals face into the retainer bore and that the seals are properly seated in the piston grooves.*

(3) Install piston assembly into retainer using a twisting motion to seat piston at bottom of retainer bore. Install piston spring in retainer with spring fingers touching piston and with spring centered in retainer.

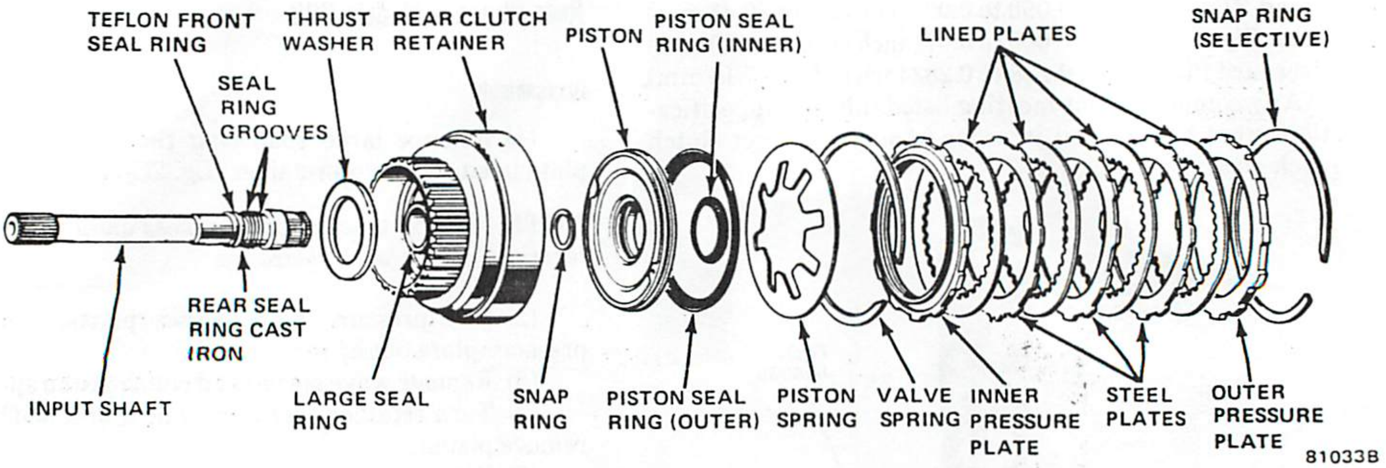

Fig. 2C-77 Rear Clutch Assembly—Model 999

(4) Install one end of wave spring into retainer groove (fig. 2C-78) and progressively push or tap spring into place until completely seated. If necessary, lightly tap piston spring to keep it centered.

(5) Install inner pressure plate. Raised side of plate should rest on piston spring and flat surface should face open end of retainer.

(6) Lubricate clutch plates with transmission fluid.

(7) Install a lined plate first and follow with a steel plate and a lined plate until correct number of plates are installed.

(8) Install outer pressure plate and selective thickness snap ring.

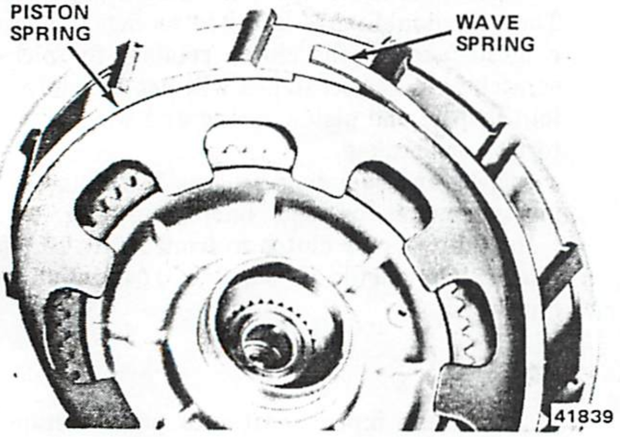

Fig. 2C-78 Piston Spring and Wave Spring Installation

(9) Measure rear clutch pack clearance. Press down firmly on outer pressure plate and insert feeler gauge between pressure plate and selective snap ring (fig. 2C-79).

(10) If necessary, adjust clearance using one of the following selective thickness outer snap rings. Snap rings are available in 0.060, 0.076 and 0.098-inch (1.52, 1.93 and 2.49 mm) thicknesses. Low limit clearance is desirable.

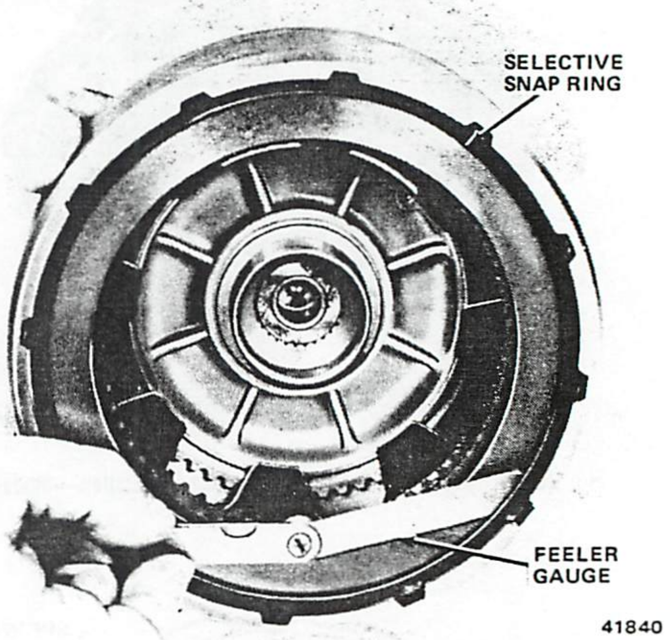

Fig. 2C-79 Measuring Rear Clutch Pack Clearance

NOTE: *Rear clutch pack clearance is very important in obtaining proper clutch engagement and shift quality.*

Rear Clutch—Model 727

Disassembly

(1) Remove large snap ring that retains pressure plate in clutch piston retainer (fig. 2C-80).

NOTE: *This is a selective thickness snap ring and determines clutch pack clearance.*

(2) Remove pressure plate, clutch plates, and inner pressure plate.

(3) Remove wave spring, spacer ring, and clutch piston spring.

(4) Turn retainer over and bump on wood block to remove piston.

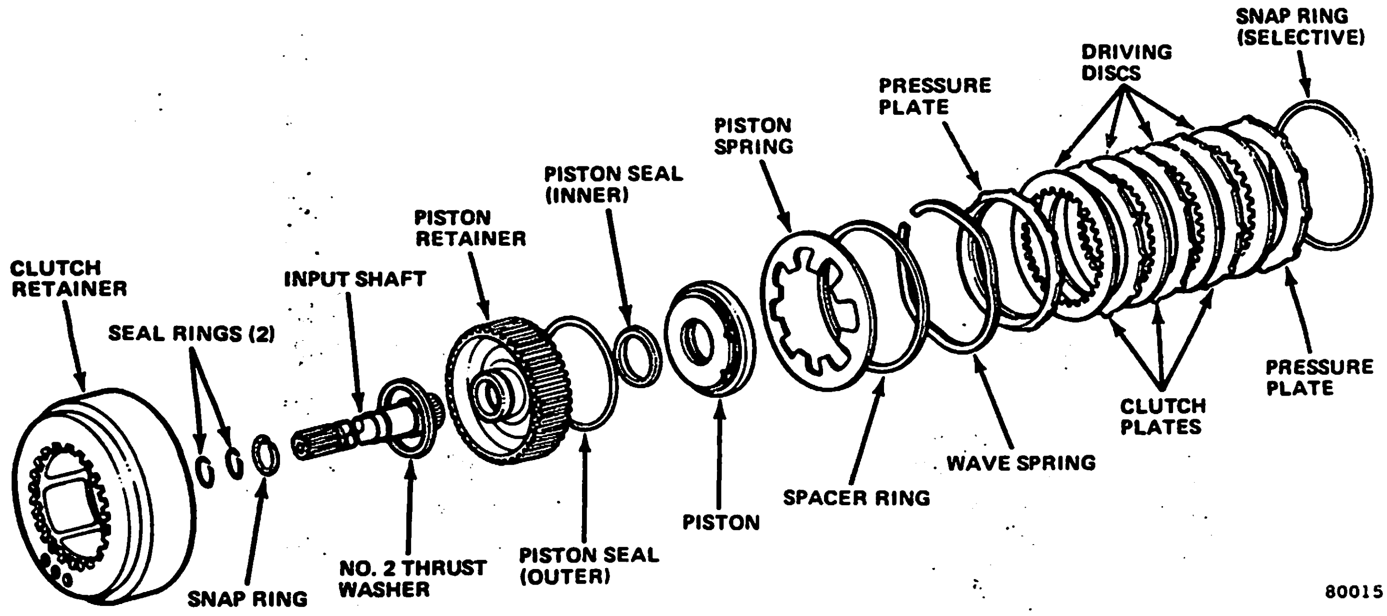

Fig. 2C-80 Rear Clutch Assembly—Model 727

(5) Remove piston inner and outer seals.

(6) Remove input shaft snap ring and press input shaft out of retainer, if necessary.

Inspection

Inspect friction material on driving discs. Replace discs that are charred, glazed, heavily pitted, flaking or if the friction material can be scraped off easily. Inspect the driving disc inner splines for wear or other damage.

Inspect the steel plates and pressure plate surfaces for over heating, scoring, and damaged driving lugs. Inspect all discs and plates for distortion. Replace warped or coned discs or plates.

Inspect the steel plate lug grooves in the retainer for smooth surfaces. The plates must slide freely in these grooves. Inspect the clutch piston ball check. The ball should move freely in its cage. Inspect the seal ring surfaces in the clutch retainer for nicks or deep scratches. Light scratches will not interfere with sealing. Inspect the piston spring, wave spring, and spacer for distortion or breakage.

Inspect the seal ring grooves in the input shaft and piston retainer for nicks, burrs, and wear.

Inspect the rear clutch to front clutch thrust washer. The washer should be 0.061 to 0.063-inches (1.55 to 1.60 mm) thick.

Input Shaft Bushing Replacement

(1) Clamp input shaft in a vise using brass protective jaws.

CAUTION: *Do not clamp the seal ring land or bearing journal.*

(2) Thread Bushing Remover Tool J-24041 straight into bushing as far as possible by hand.

(3) Using wrench, thread puller into bushing three to four additional turns to fully engage puller threads in bushing.

(4) Thread Slide Hammer Bolts Tool J-7004-3 into puller (fig. 2C-81).

(5) Bump outward with slide hammers to remove bushing.

(6) Thoroughly clean input shaft and remove chips generated by bushing removal.

(7) Grip old bushing with pliers and remove it from tool.

NOTE: *Be careful to protect the remover tool threads when using the tool.*

(8) Thread Bushing Installer Tool J-24040 onto Driver Handle J-8092 (fig. 2C-82).

(9) Position replacement bushing on installer tool and install bushing straight into shaft until tool bottoms.

(10) Clean assembly thoroughly.

Assembly

(1) Press input shaft into piston retainer and install snap ring, if removed.

(2) Lubricate inner and outer sealing rings with petroleum jelly and install on clutch piston.

NOTE: *Be sure that lips of seals face into retainer bore and that seals are properly seated in piston grooves.*

(3) Install piston assembly in clutch retainer.

(4) Seat piston at bottom of retainer bore using a twisting motion.

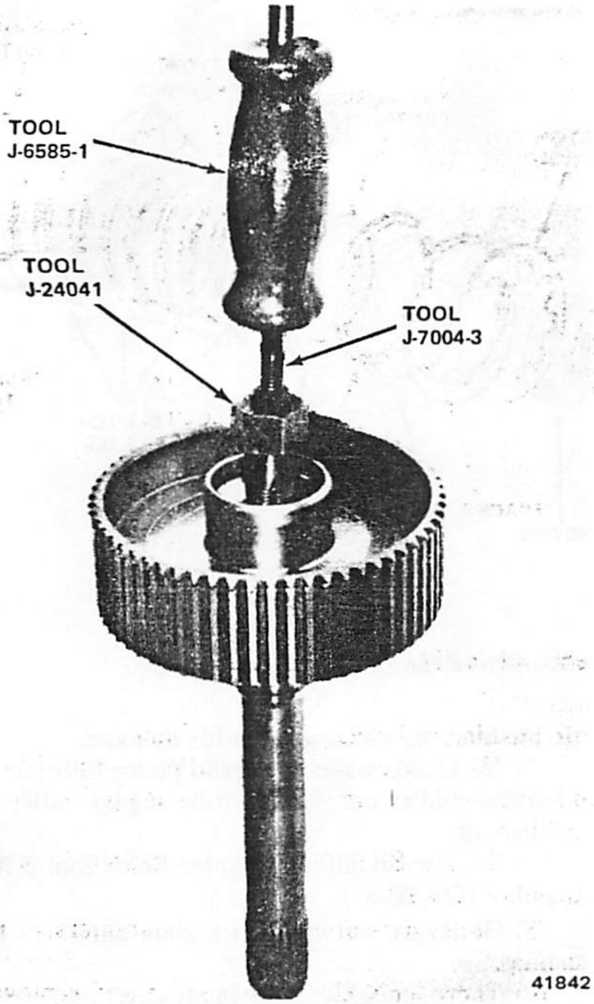

Fig. 2C-81 Input Shaft Bushing Removal—Model 727

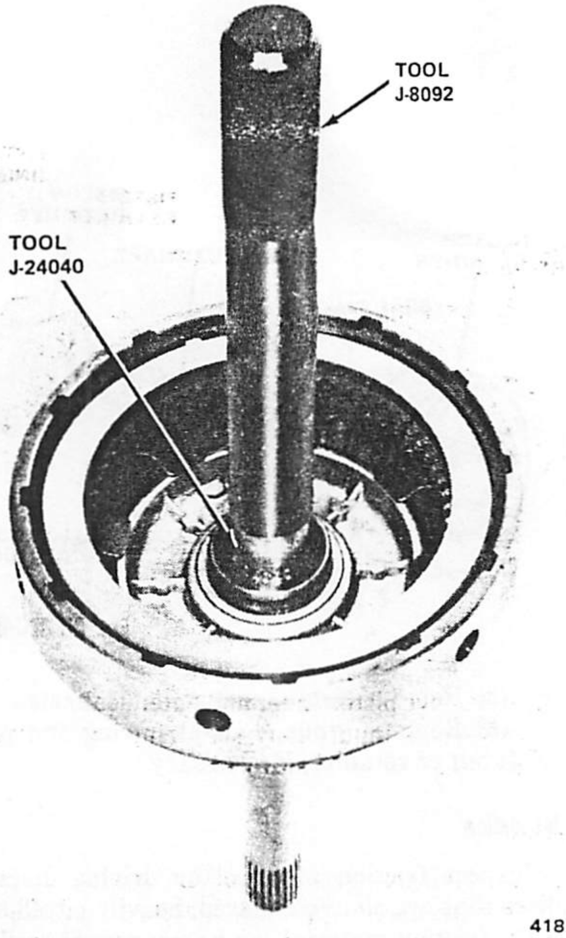

Fig. 2C-82 Input Shaft Bushing Installation—Model 727

(5) Position clutch retainer over piston retainer splines. Support assembly to maintain position of clutch retainer.

(6) Install piston spring in clutch retainer with spring fingers touching piston.

(7) Install spacer ring. Be sure piston spring and ring are centered in retainer recess.

(8) Install one end of wave spring in retainer groove: Progressively push or tap spring into plate until completely seated.

NOTE: *If necessary, gently tap the piston spring and spacer to keep them centered.*

(9) Install inner pressure plate in retainer. Raised side of plate should rest on piston spring and flat surface should face outward.

(10) Lubricate remaining clutch plates with transmission fluid and install in retainer. Alternately install lined plate followed by steel plate until correct number of lined and steel plates have been installed.

(11) Install outer pressure plate and selective thickness snap ring.

(12) Measure clutch pack clearance. Press down firmly on outer pressure plate and insert a feeler gauge between pressure plate and selective outer snap spring.

(13) If necessary, adjust clearance using one of the following selective thickness snap rings. Snap rings are available in 0.060, 0.074, 0.088 and 0.106-inch (1.52, 1.88 and 2.70 mm) thicknesses.

NOTE: *Rear clutch pack clearance is very important in obtaining proper clutch engagement and shift quality.*

Planetary Gear Assembly—Model 999

End Play Measurement

(1) Measure end play of planetary assembly before removing component parts from output shaft.

(2) Support front end of output shaft on wood block and position assembly in an upright position.

(3) Push rear annulus gear support downward on output shaft (fig. 2C-83).

(4) Insert feeler gauge between rear annulus support and shoulder on output shaft. Clearance should be 0.001 to 0.047 inch (0.02 to 1.19 mm). If clearance is not

within specifications, replace thrust washers, any worn parts, and selective thickness snap ring at assembly.

Disassembly

(1) Remove No. 3 thrust washer from forward end of output shaft (fig. 2C-84).

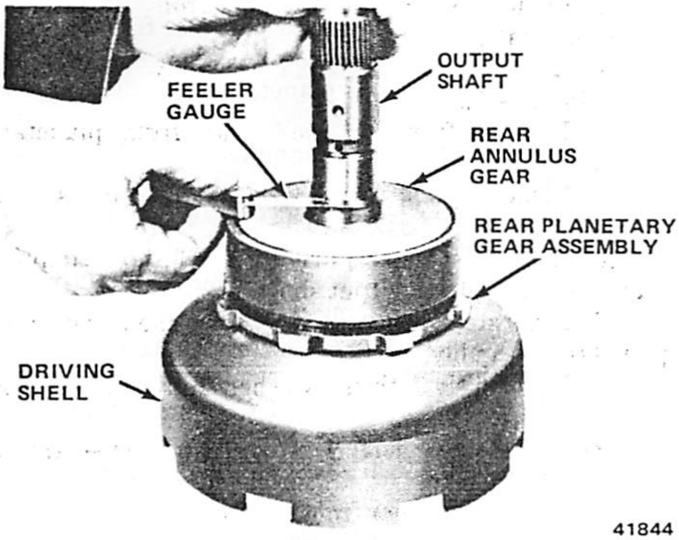

Fig. 2C-83 Measuring Planetary Gear Assembly End Play

(2) Remove selective snap ring from forward end of output shaft.

(3) Remove front planetary gear assembly.

(4) Remove snap ring and No. 4 thrust washer from forward hub of front planetary assembly.

(5) Remove front annulus gear and support from planetary gear assembly. If necessary, remove large snap ring from front annulus gear and separate support from gear.

(6) Remove No. 5 and No. 6 thrust washers from planetary gear assembly.

(7) Remove sun gear, driving shell, and rear planetary assembly from output shaft.

(8) Separate sun gear and driving shell from rear planetary assembly.

(9) Remove rear snap ring and No. 8 steel thrust plate from sun gear.

(10) Remove sun gear from driving shell.

(11) Remove remaining snap ring and No. 7 steel thrust plate from sun gear.

(12) Remove No. 9 thrust washer from forward side of rear planetary assembly.

(13) Remove planetary gear assembly and No. 10 thrust washer.

(14) If necessary, remove large snap ring from rear of annulus gear to separate support from gear.

Inspection

Inspect the bearing surfaces on the output shaft for nicks, burrs, scores or other damage. Light scratches, nicks or burrs can be removed with crocus cloth. Be sure all oil passages in the shaft are open and clean. Inspect the speedometer drive gear. Remove nicks and burrs with a sharp-edged stone.

Inspect the sun gear bushings for wear or scores. Replace the sun gear if the bushings are damaged.

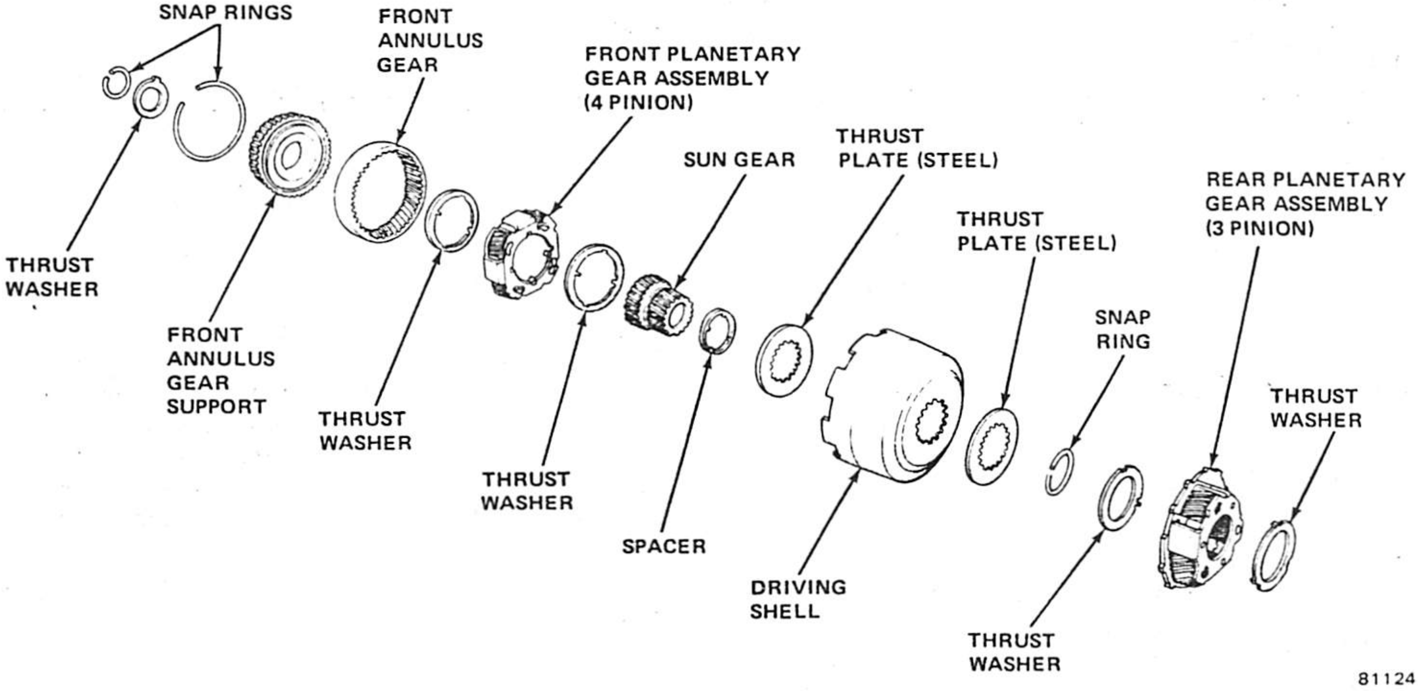

Fig. 2C-84 Wide Ratio Planetary Gear Assembly—Model 999

Inspect all thrust washers and plates. Replace if damaged or worn below thickness specifications.

Inspect gear assemblies for cracks, broken pinions, worn gear teeth, broken pinion shafts or lockpins and damaged thrust faces. Replace as required.

Inspect annulus gears for cracks and worn teeth.

Replace all distorted snap rings.

Assembly

(1) Install rear annulus gear support in annulus gear and install snap ring.

(2) Install rear annulus gear assembly on output shaft.

(3) Install No. 10 thrust washer on output shaft.

(4) Position rear planetary gear assembly in rear annulus gear. Install No. 9 thrust washer on front side of gear assembly.

(5) Install No. 7 steel thrust plate and snap ring on opposite end of sun gear.

(6) Insert sun gear through front side of driving shell, and install No. 8 steel thrust plate and snap ring on one end of sun gear.

(7) Install driving shell and sun gear onto output shaft, and engage sun gear teeth with rear planetary pinions.

(8) Install front annulus gear support in annulus gear and install large snap ring.

(9) Install No. 5 thrust at forward end of front planetary gear assembly, and insert assembly into front annulus gear.

(10) Position No. 6 thrust washer on rear side of front planetary gear assembly.

(11) Carefully work front planetary and annulus gear assembly onto output shaft and mesh planetary pinions with sun gear.

(12) Install No. 3 thrust washer on output shaft.

(13) Install selective snap ring and measure assembly end play.

NOTE: *If necessary, adjust clearance by using selective thickness snap rings. Snap rings are available in 0.042, 0.064 and 0.084-inch (1.06, 1.63 and 2.13 mm) thicknesses.*

Planetary Gear Assembly—Model 727

End Play Measurement

(1) Measure planetary assembly end play before removing component parts from output shaft.

(2) Support front end of output shaft on wood block and place assembly in upright position.

(3) Push rear annulus gear support downward on output shaft.

(4) Insert feeler gauge between rear annulus support and shoulder on output shaft (fig. 2C-83). Clearance should be 0.009 to 0.044-inch (0.22 to 1.12 mm). If clearance is not within specifications, replace thrust washers, any worn parts and selective thickness snap ring at assembly.

Disassembly

(1) Remove No. 3 thrust washer from forward end of output shaft.

(2) Remove front planetary assembly from output shaft (fig. 2C-85).

(3) Remove front annulus gear from planetary assembly.

(4) Remove No. 4 thrust washer from rear side of planetary gears.

(5) Remove sun gear, driving shell and rear planetary assembly from output shaft.

(6) Separate sun gear and driving shell from rear planetary assembly.

(7) Remove No. 5 thrust washer from inside of driving shell.

(8) Remove rear snap ring and No. 6 steel thrust plate from sun gear.

(9) Remove sun gear from driving shell.

(10) Remove remaining snap ring from sun gear, if necessary.

NOTE: *The forward end of the sun gear is longer than the rear.*

(11) Remove No. 7 thrust washer from forward side of rear planetary assembly.

(12) Remove gear assembly and No. 8 thrust plate from rear annulus gear.

Inspection

Inspect the bearing surfaces on the output shaft for nicks, burrs, scores, and other damage. Light scratches, nicks, or burrs can be removed with crocus cloth.

NOTE: *Be sure all oil passages in the output shaft are open and clean.*

Inspect the speedometer drive gear. Remove nicks and burrs with an oilstone.

Inspect the sun gear bushings for wear and scores. Replace the sun gear if the bushings are damaged.

Inspect all thrust washers and plates. Replace them if damaged or worn below thickness specifications.

Inspect the gear assemblies for cracks, broken pinions, worn gear teeth, broken pinion shafts or lockpins, or damaged thrust faces. Replace components as necessary.

Inspect the annulus gears for cracks and worn teeth. Replace any distorted snap rings.

Assembly

(1) Install rear annulus gear on output shaft (fig. 2C-85).

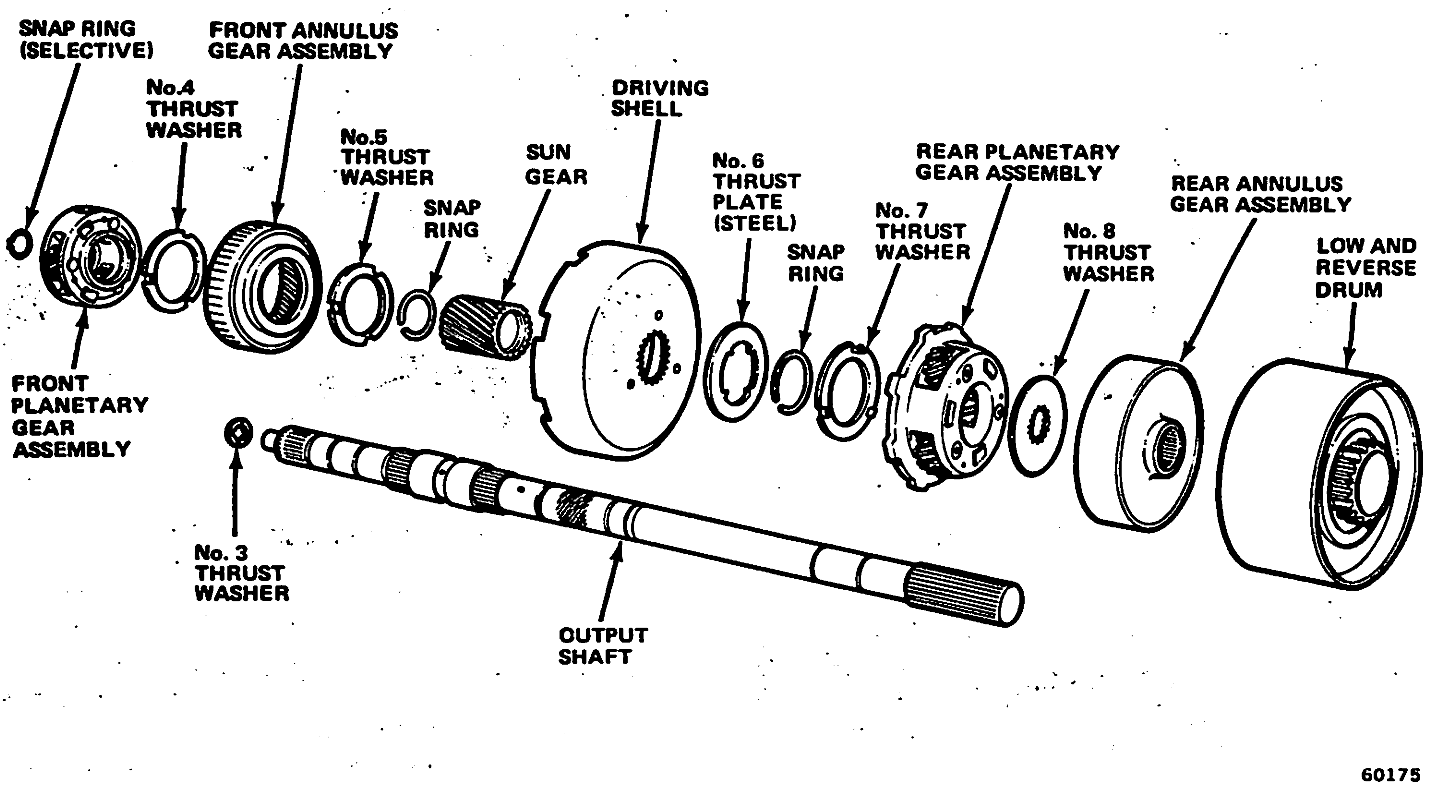

Fig. 2C-85 Planetary Gear Assembly—Model 727

(2) Apply thin coat of petroleum jelly on No. 8 thrust plate.

(3) Position plate on output shaft and in rear annulus gear.

NOTE: *Be sure teeth are engaged with output shaft splines.*

(4) Position rear planetary gear assembly in rear annulus gear and install No. 7 thrust washer on forward side of gear assembly.

(5) Install snap ring in forward groove of sun gear (long end of gear).

(6) Insert sun gear through forward side of driving shell and install steel thrust plate and snap ring on rear side of sun gear.

(7) Install snap ring in forward groove of sun gear. Install No. 5 thrust washer in driving shell over sun gear.

(8) Install driving shell and sun gear assembly on output shaft and engage sun gear teeth with rear planetary pinions.

(9) Position No. 4 thrust washer on rear hub of front planetary gear and engage planetary gear with front annulus gear.

(10) Install front planetary and annulus gear assembly onto output shaft and mesh planetary pinions with sun gear.

(11) Install selective snap ring and measure assembly end play.

NOTE: *If necessary, the clearance should be adjusted by using selective thickness snap rings. Snap rings are available in 0.048, 0.055 and 0.062-inch (1.22, 1.40 and 1.57 mm) thicknesses.*

Overrunning Clutch

Inspection

Inspect the clutch rollers for smooth, round surfaces. They must be free of flat spots and chipped teeth.

Inspect the roller contact surfaces in the cam and race for brinelling and inspect the springs for distortion, wear or other damage.

On model 727 transmission only, inspect the cam setscrew for tightness. If loose, tighten the setscrew and restake the case around the screw.

Cam Replacement—Model 999

If the overrunning clutch cam or spring retainer are damaged, they can be replaced with a service replacement cam, spring retainer and retaining screw (fig. 2C-86).

(1) Remove bolts attaching output shaft support to rear of case.

(2) Remove support from rear of case using woodblock and hammer.

(3) Centerpunch rivets **exactly** in center of each rivet head (fig. 2C-87).

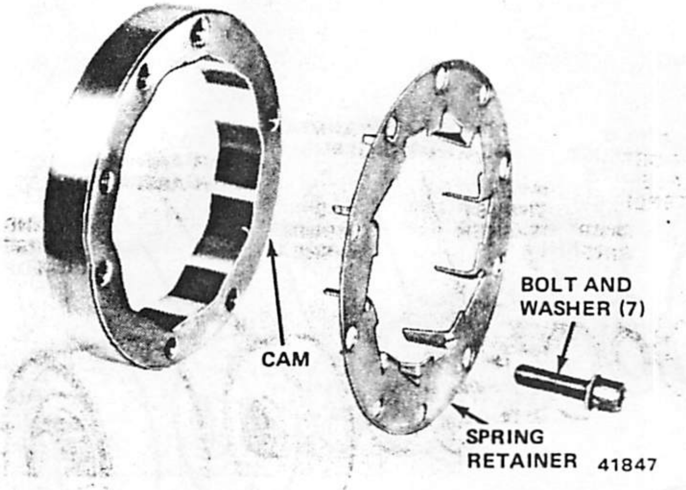

Fig. 2C-86 Cam and Spring Retainer

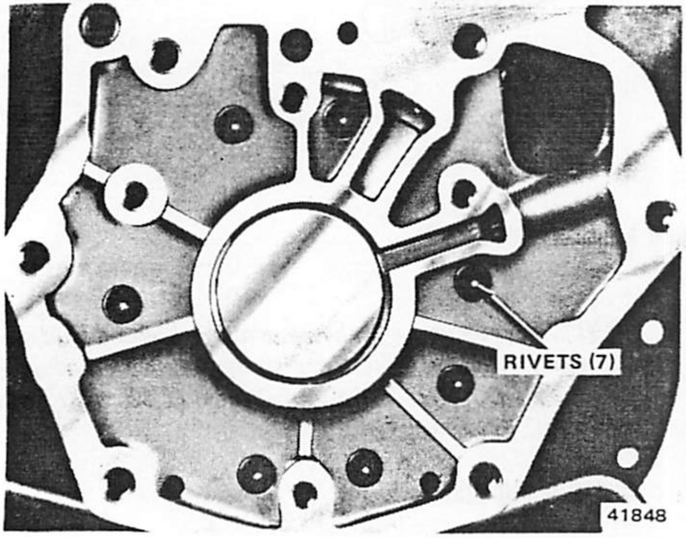

Fig. 2C-87 Cam Rivet Location

(4) Drill through each rivet head using 3/8-inch (10 mm) diameter drill.

CAUTION: *Do not drill into the transmission case.*

(5) Remove rivet heads using small chisel.

(6) Remove rivets and cam from case using blunt punch (fig. 2C-88).

NOTE: *Move punch from one rivet to another in clockwise direction after each punch stroke, to drive the cam out of the case evenly.*

(7) Enlarge rivet holes in case carefully using diameter 17/64-inch (7 mm) drill.

(8) Remove chips, burrs, and any foreign material from case and be sure cam area is free of burrs and chips.

(9) Install replacement cam and spring retainer in case with bolt holes in cam and retainer aligned with holes in case.

(10) Thread retaining screws and washers into cam.

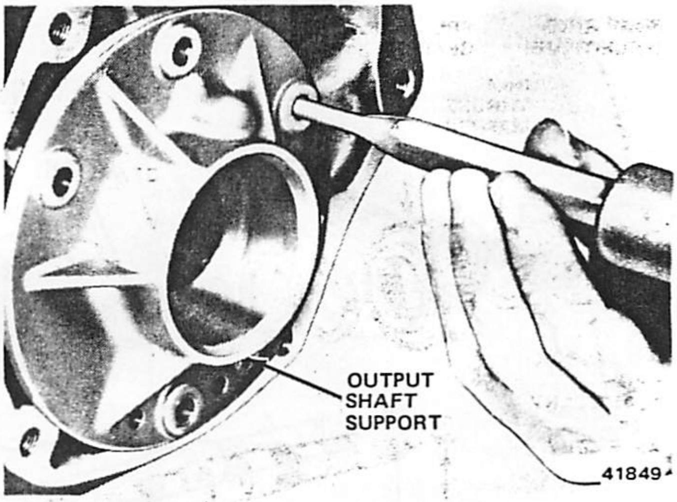

Fig. 2C-88 Overrunning Clutch Cam Removal

NOTE: *Install the washers on the screws so that the inner diameter of the washer contacts the screw head.*

(11) Install cam in case using brass hammer.

(12) Alternately and evenly tighten retaining screws to 100 inch-pounds (11 N•m) torque.

(13) Thread two Pilot Studs Tool J-3387-2 into case (fig. 2C-89).

(14) Position illuminated light bulb next to case to heat case.

CAUTION: *Do not use an open flame to heat the case.*

(15) Chill support with ice (preferably dry ice).

(16) Remove light, position support over pilot studs and install support in case using wood block and hammer.

(17) Install and tighten support attaching bolts to 150 inch-pounds (17 N•m) torque.

Cam Replacement—Model 727

The overrunning clutch cam and spring retainer should be removed only if replacement is necessary.

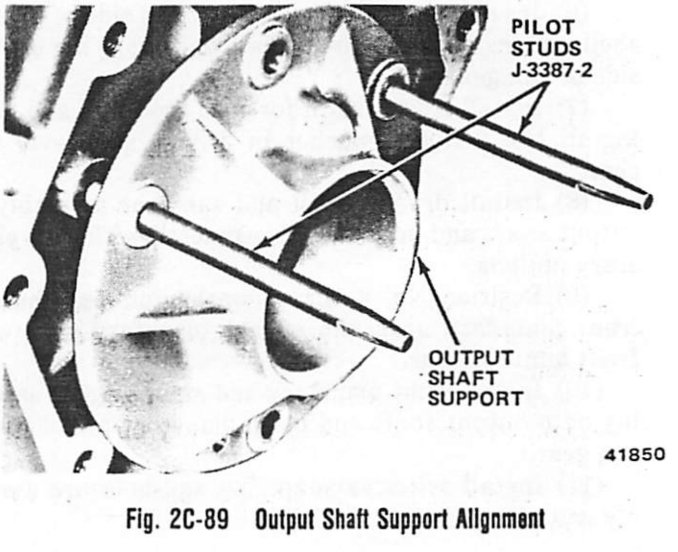

Fig. 2C-89 Output Shaft Support Alignment

(1) Remove setscrew from case.

(2) Remove bolts attaching output shaft support to rear of case.

(3) Insert punch through bolt holes and drive cam out of case (fig. 2C-88).

NOTE: *Move punch from one bolt hole to another in clockwise direction after each punch stroke to drive the cam out of the case evenly.*

CAUTION: *The output shaft support must be installed in the case before the overrunning clutch cam can be installed. If the support must be replaced drive it out the rear of the case using a wood block and hammer.*

(4) Thread two Pilot Stud Tools J-3387-2 into case (fig. 2C-89).

(5) Install support in case using wood block and hammer.

(6) Clean all burrs, chips, and foreign material from cam area in case.

(7) Position spring retainer on cam. Be sure retainer lugs snap firmly into cam notch.

(8) Align cam serrations with those in case.

(9) Install cam evenly into case as far as possible using brass hammer.

(10) Install Tool J-24042 (fig. 2C-90).

(11) Tighten tool nut to seat cam in case. Be sure cam is completely seated.

(12) Install cam retaining setscrew and stake case around setscrew.

(13) Remove Tool J-24042.

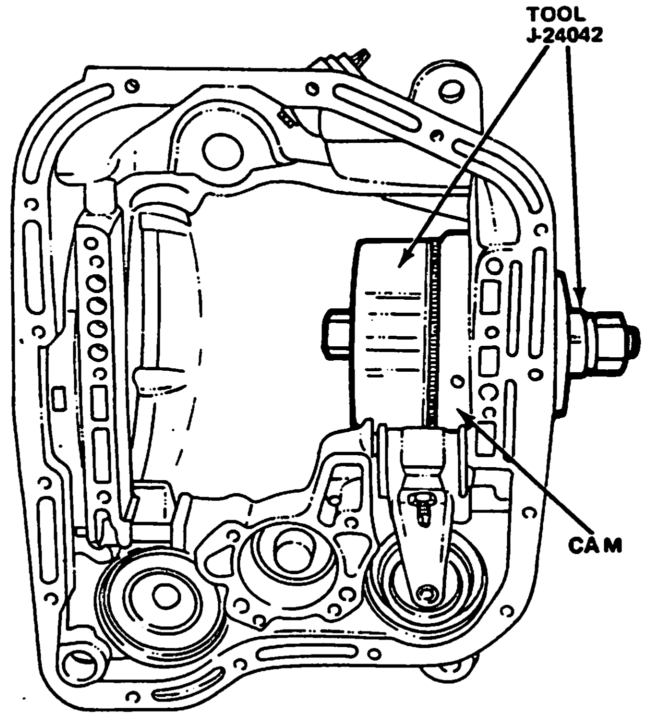

Fig. 2C-90 Overrunning Clutch Cam Installation—Model 727

(14) Install and tighten support retaining bolts to 150 inch-pounds (17 N•m) torque.

(15) Stake case around cam in twelve places using blunt chisel.

Front Servo and Band

Two front servo designs are used. Refer to figures 2C-91 and 2C-92 for assembly details.

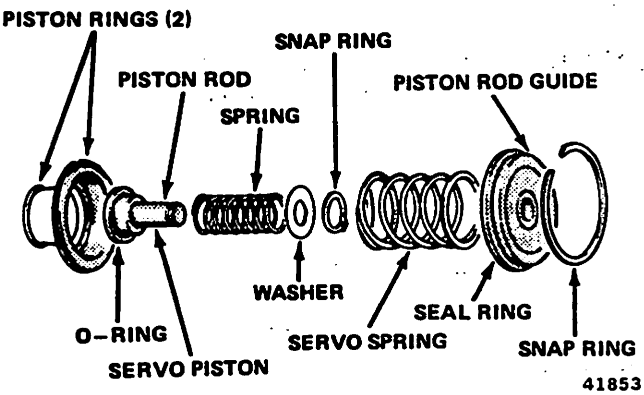

Fig. 2C-91 Kickdown Servo Front Servo Assembly

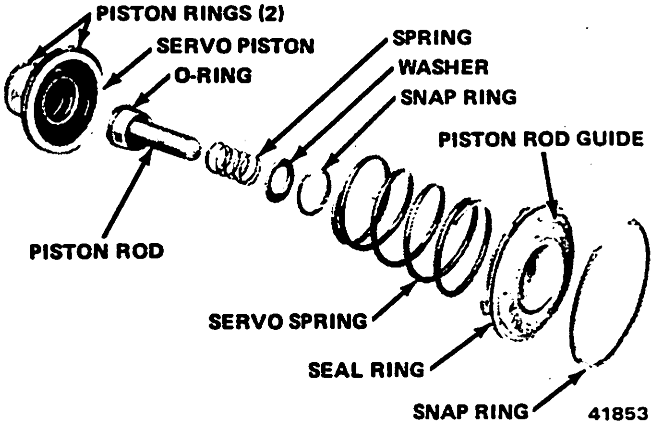

Fig. 2C-92 Front Servo Assembly—Model 727

Disassembly

NOTE: *The front servo in model 727 transmissions requires further disassembly after removal from the servo bore (fig. 2C-91).*

(1) Remove piston rod retaining snap ring from servo piston.

(2) Remove washer, piston rod spring, and piston-rod from servo piston.

Inspection

Inspect the piston for nicks, burrs, scores, and wear. Be sure the ring grooves are not damaged. Inspect the fit of the guide on the piston rod. Inspect the piston bore in the case for scores or other damage. Inspect the piston spring(s) for distortion. On model 727 transmissions, inspect the bore in the piston and the piston rod O-ring (fig. 2C-92).

Inspect the band lining for a poor bond to the band, burn marks, glazing, uneven wear pattern and flaking.

If the lining is so badly worn that the grooves are not visible at any portion of the band, replace the band. Inspect the band for distortion or cracked ends. Replace as necessary.

Assembly

CAUTION: *Do not use force to assemble any of the servo components. If they do not assemble easily, investigate and correct the cause before proceeding with assembly.*

(1) Apply petroleum jelly to piston rod O-ring and install piston rod in servo piston bore.

(2) Install piston rod spring on piston rod.

(3) Install washer.

(4) Compress spring and install piston rod retaining snap ring.

Rear Servo and Rear Band

Disassembly

(1) Compress piston plug spring and remove snap ring.

(2) Remove snap ring, piston plug, and plug spring (fig. 2C-93).

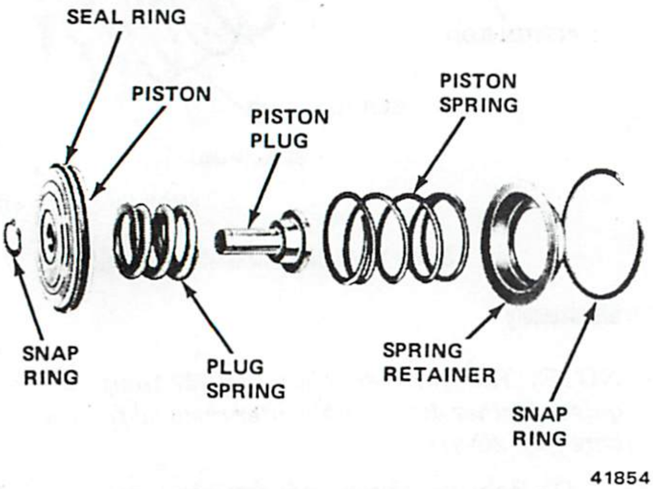

Fig. 2C-93 Rear Servo Assembly

Inspection

Inspect the piston and piston plug for nicks, burrs, scores, and wear. The plug must move freely in the piston. Inspect the piston bore in the case for scores or other damage. Inspect the springs for distortion.

Inspect the band lining for poor bonding to the band and for excessive wear. If the lining is so excessively worn that the grooves are not visible at any portion of the band, replace the band. Inspect the band for distortion or cracks and replace as necessary.

Assembly

(1) Lubricate piston plug and piston with petroleum jelly and insert piston plug through plug spring and into piston.

(2) Compress piston spring and install snap ring.

Torque Converter Service

If the transmission is being overhauled to correct a malfunction that generated sludge or heavy accumulations of metal particles or friction material, the oil cooler and cooler lines must be flushed thoroughly and the torque converter replaced. Do not attempt to clean or flush the converter.

The oil cooler and cooler lines can be flushed using solvent and compressed air.

Flushing Oil Cooler and Cooler Lines

(1) Place length of hose over cooler outlet line and secure end of hose in waste container.

(2) Place length of hose over cooler inlet line.

(3) Pump approximately one pint (0.47 liter) cleaning solvent into oil cooler through hose attached to inlet line.

(4) Insert compressed air gun nozzle into hose attached to cooler inlet line. Apply short blasts of compressed air to flush dirt and solvent from cooler and lines. Repeat flushing operation until drained fluid is clear.

(5) Pump approximately one pint (0.47 liter) of new transmission fluid into cooler and lines. Repeat flushing operation, using new transmisson fluid, to remove all traces of cleaning solvent and any residual dirt.

(6) Remove hoses from cooler lines when flushing operations are completed.

TRANSMISSION ASSEMBLY

NOTE: *Use automatic transmission fluid or petroleum jelly only to lubricate transmission components during assembly.*

Overrunning Clutch

(1) Place transmission case in upright position and install clutch cam and spring retainer.

(2) Install clutch springs and rollers so springs rest against retainer post and rollers rest against springs, and with both springs and rollers installed on counterclockwise side of spring retainer posts (fig. 2C-94).

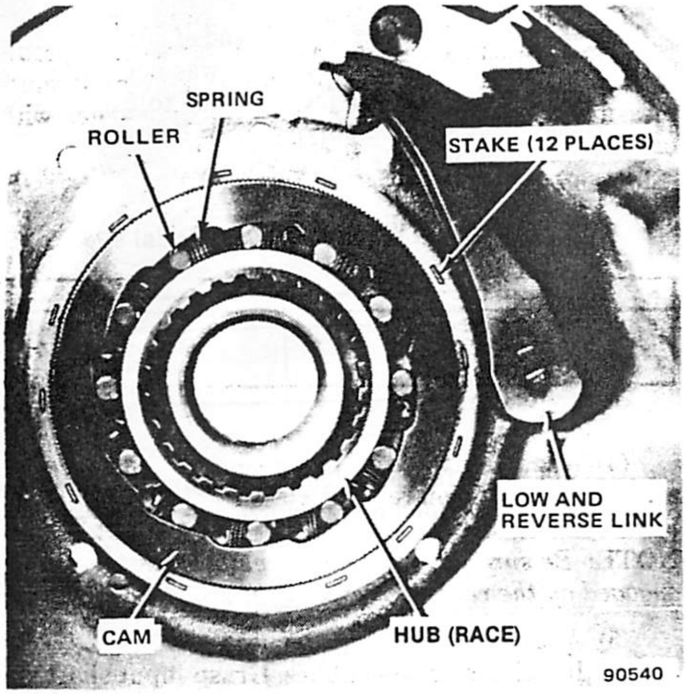

Fig. 2C-94 Overrunning Clutch and Rear Band Link

Rear Servo

Servo

(1) Install servo piston assembly in case bore with twisting motion.

(2) Place spring retainer and snap ring over piston (fig. 2C-93).

(3) Compress piston spring by hand and install snap ring.

Rear Band—Model 727

(1) Install rear band in case.

(2) Install short strut, and connect long link and anchor in band (fig. 2C-95).

(3) Thread band adjusting screw inward just enough to hold band strut in place.

(4) Be sure long link and anchor assembly is installed as shown in figure 2C-88 to provide clearance for rear band and drum.

(5) Install low-reverse drum in overrunning clutch hub and rear band.

Rear Band—Model 999

NOTE: *The model 999 transmission has a double wrap band supported at two points by a reaction pin mounted in the case. It is actuated at one point by the rear servo adjusting screw (fig. 2C-96).*

(1) Install replacement O-ring on reaction pin and insert pin into case until pin is flush with gasket surface.

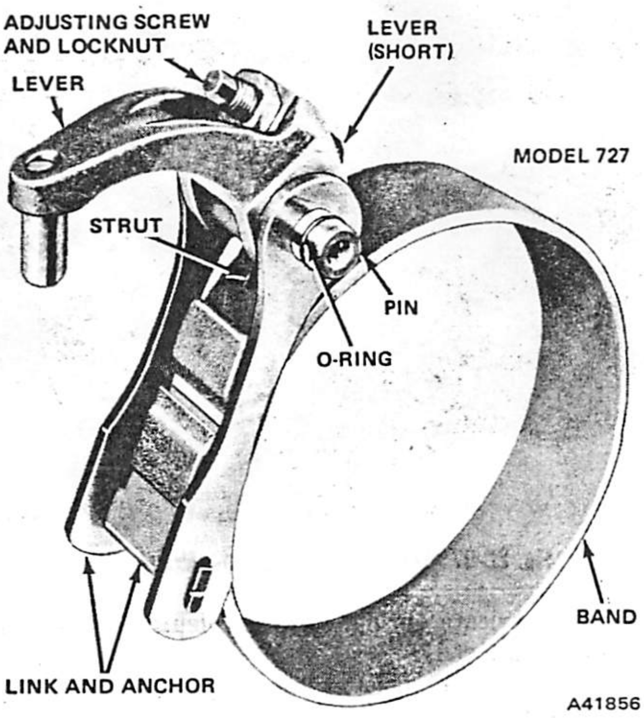

Fig. 2C-95 Rear Band—Model 727

(2) Position band in case so both band lugs rest against reaction pin.

(3) Install low-reverse drum in overrunning clutch hub and into rear band.

(4) Install band operating lever and pivot pin.

NOTE: *When installed, the lever adjusting screw should touch the center lug of the band and the pivot pin should be flush with the case (fig. 2C-97).*

Front Servo

NOTE: *On model 727 transmissions, the servo piston must be subassembled before installation.*

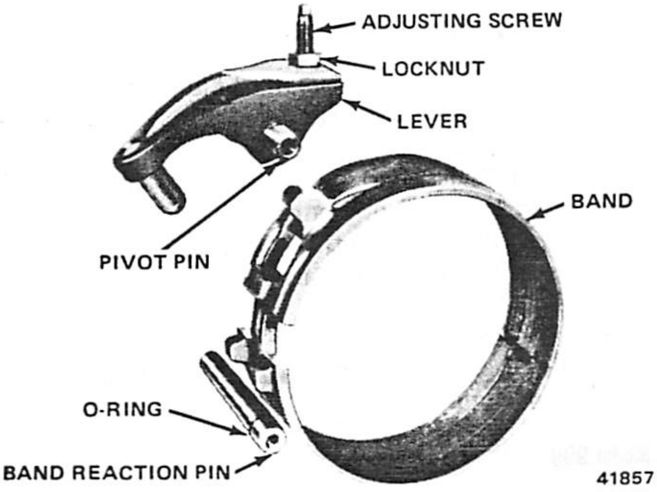

Fig. 2C-96 Rear Band—Model 999

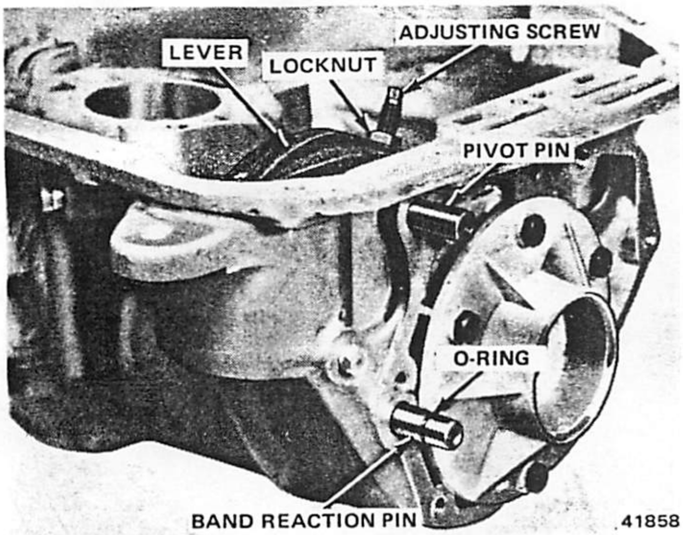

Fig. 2C-97 Rear Band Installation—Model 999

(1) Lubricate O-ring with petroleum jelly and install on piston rod.

(2) Install rod in piston.

(3) Install spring, flat washer and snap ring.

(4) Insert servo piston assembly into case bore.

(5) Install piston rod, spring(s) and guide.

(6) Compress piston spring(s) with large C-clamp and install snap ring.

(7) Remove C-clamp.

Planetary Gear Assembly and Output Shaft

CAUTION: *Protect all machined surfaces of the output shaft during installation.*

(1) Position and support gear and output shaft assembly in case and insert output shaft through rear support.

(2) Carefully work gear and shaft assembly rearward and engage rear planetary carrier lugs in low reverse drum slots.

Front and Rear Clutch Assemblies

The front and rear clutches, front band, oil pump and reaction shaft support are installed with the transmission in an upright position.

Cut a 3-1/2 inch (9 cm) diameter hole in a workbench, in the end of a small oil drum or a large wooden box strong enough to support the transmission. Cut or file notches at the edge of the hole to accommodate the output shaft.

Carefully insert the output shaft into the hole and support the transmission in an upright position on the output shaft support flange.

Model 999

(1) Apply thin coat of petroleum jelly to selective thrust washer.

(2) Install washer on front end of output shaft.

(3) If transmission end play was not within specifications (0.022 to 0.091 inch or 0.056 to 2.31 mm) when measured at disassembly, replace thrust washer with one that will provide proper end play.

Thrust Washer Chart—Model 999

Thickness (Inch)	Color
0.052 - 0.054	Natural (Brown)
0.068 - 0.070	Red
0.083 - 0.085	Black

60234

(4) Align front clutch inner splines and place assembly in position on rear clutch.

NOTE: *Be sure the front clutch plate splines are fully engaged on the rear clutch front hub.*

(5) Align rear clutch inner splines.

(6) Install clutch assemblies. Grasp input shaft and lower assemblies into case to install them.

(7) Install clutch assemblies using twisting motion and engage rear clutch splines over splines of front annulus gear.

NOTE: *Be sure the front clutch drive lugs are fully engaged in the driving shell slots.*

Model 727

(1) Apply thin coat of petroleum jelly to output shaft thrust washer.

(2) Install washer on front of output shaft.

(3) Align front clutch inner splines and place assembly in position on rear clutch.

NOTE: *Be sure the front clutch splines are fully engaged on the rear clutch front hub.*

(4) Align rear clutch inner splines.

(5) Install clutch assemblies. Grasp input shaft and lower clutch assemblies into case to install them.

(6) Install clutch assemblies using a twisting motion to engage rear clutch splines over splines of front annulus gear.

NOTE: *Be sure the front clutch drive lugs are fully engaged in the driving shell slots.*

Front Band

(1) Slide band over front clutch assembly.

(2) Install band strut. Also install band anchor on model 727 (fig. 2C-98).

(3) Tighten band adjusting screw enough to hold band and linkage in place.

Oil Pump and Reaction Shaft Support

If difficulty was encountered in removing the pump assembly due to an exceptionally tight fit in the case, it may be necessary to heat and expand the case in order to install the pump. If necessary, heat the pump area for a few minutes, using a heat lamp, before installing the pump and support assembly.

Model 999

(1) Install thrust washer on reaction shaft support hub.

(2) Thread two Pilot Studs J-3387-2 into case pump opening.

(3) Install gasket over studs.

(4) Install rubber seal ring in groove in outer flange of pump housing. Be sure seal is not twisted.

(5) Coat seal ring with petroleum jelly.

(6) Install pump assembly in case. If necessary, tap pump assembly lightly with rawhide mallet to install.

(7) Install four pump attaching bolts finger-tight.

(8) Remove pilot studs and install remaining pump attaching bolts finger-tight.

(9) Rotate input and output shafts to see if any binding exists.

(10) If shafts rotate freely, tighten all pump attaching bolts to 175 inch-pounds (20 N•m) torque.

(11) Recheck shafts for bind-free rotation. If bind exists, loosen bolts and tighten bolts alternately and evenly to 175 inch-pounds (20 N•m) torque.

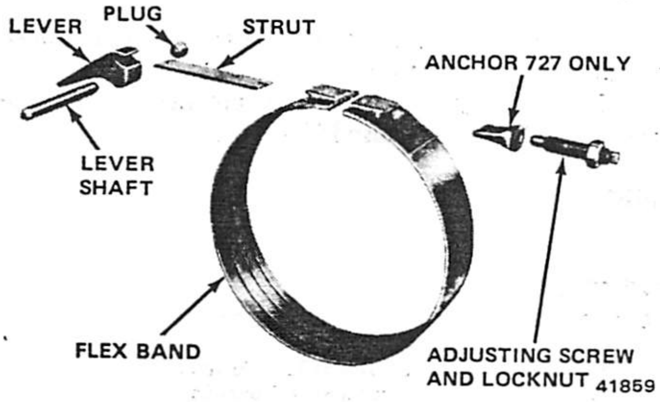

Fig. 2C-98 Front Band Arrangement

Model 727

(1) If transmission end play was not within specifications (0.036 to 0.084 inch or 0.91 to 2.13 mm) when measured at disassembly, replace thrust washer on reaction shaft support hub with one that will provide correct end play.

(2) Thread two Pilot Studs Tool J-3387-2 into case pump opening.

(3) Install gasket over studs.

Thrust Washer Chart—Model 727

Thickness (Inch)	Color
0.061 - 0.063	Natural (Brown)
0.084 - 0.086	Red
0.102 - 0.104	Yellow

60235

(4) Install rubber seal ring in groove in outer flange of pump housing. Be sure seal is not twisted.

(5) Coat seal ring with petroleum jelly.

(6) Install pump assembly in case. If necessary, tap pump assembly lightly with rawhide mallet to install.

(7) Position deflector, if equipped, over vent opening and install four pump attaching bolts finger-tight.

(8) Remove pilot studs and install remaining pump attaching bolts finger-tight.

(9) Rotate input and output shafts to see if any binding exists.

(10) If shafts rotate freely, tighten all pump attaching bolts to 175 inch-pounds (20 N•m) torque.

(11) Recheck shafts for free rotation. If bind exists, loosen bolts and tighten bolts alternately and evenly to 175 inch-pounds (20 N•m) torque.

Governor and Park Gear

(1) Install gear and governor body assembly on output shaft.

(2) Align assembly so governor valve shaft hole in governor body is aligned with hole in output shaft.

(3) Slide assembly into place and install snap ring behind governor body.

(4) Tighten governor body-to-gear attaching bolts to 100 inch-pounds (11 N•m) torque.

(5) Bend end of lock tabs against shoulders of bolt heads.

(6) Install governor valve on valve shaft.

(7) Insert assembly into body and through governor weights.

(8) Install valve shaft retaining E-clip.

Output Shaft Bearing and Adapter Housing

(1) Install bearing in adapter housing if not installed previously.

(2) Install seal in housing.

(3) Install bearing snap rings.

Valve Body and Accumulator Piston

(1) Before installing valve body, check operation of clutches and bands using air pressure test procedure to confirm proper operation.

(2) Clean all mating surfaces and remove any burrs from transmission case or valve body steel plate mating surfaces.

(3) Install accumulator piston assembly in case bore and install piston spring on piston (fig. 2C-99).

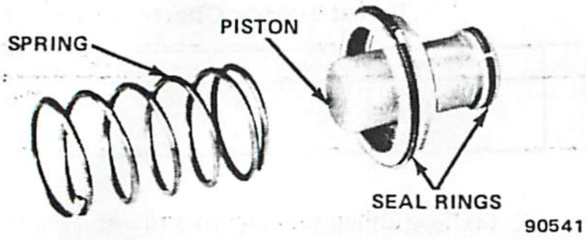

Fig. 2C-99 Accumulator Assembly

(4) Insert park lock rod through opening in rear of case.

(5) Position knob of lock rod against reaction plug and sprag.

(6) Move front end of rod toward centerline of transmission while exerting rearward pressure on rod to force it past sprag. Rotate output shaft, if necessary.

NOTE: *Before installing the valve body, be sure the neutral start switch has not yet been installed.*

(7) Place valve body manual lever in Drive position.

(8) Place valve body assembly in its approximate position in case.

(9) Align valve body in case and install attaching screws finger-tight.

(10) Install neutral start switch.

(11) Shift valve body manual lever to Neutral position.

(12) Relocate valve body if necessary to align manual lever neutral finger over neutral start switch plunger ball.

(13) Tighten valve body attaching screws to 100 inch-pounds (11 N•m) torque.

(14) Install gearshift control lever on manual lever shaft and tighten clamp bolt.

(15) Check lever shaft for binding in case by moving lever through all detent positions.

NOTE: *If binding exists, loosen the valve body attaching screws and align the valve body.*

(16) Install flat washer and throttle lever and tighten throttle lever clamp bolt.

Rear Band Adjustment

(1) Loosen locknut and back nut off five turns.

(2) Tighten band adjusting screw to 72 inch-pounds (8 N•m) torque.

CAUTION: *If Adapter Tool J-24063 is used to adjust the band, tighten the adjusting screw to 36 inch-pounds (4 N•m) torque only.*

(3) Back off adjusting screw four turns on 999 and two turns on 727.

(4) Hold adjusting screw in position and tighten locknut to 35 foot-pounds (47 N•m) torque.

(5) Install oil pan and gasket.

Front Band Adjustment

(1) Loosen locknut and back nut off five turns.

(2) Be sure band adjusting screw turns freely in case. Lubricate screw, if necessary.

(3) Tighten band adjusting screw to 72 inch-pounds (8 N•m) torque using Torque Wrench J-5853 and a 5/16 (8 mm) square socket.

CAUTION: *If Adapter Tool J-24063 is used to adjust the band, tighten the adjusting screw to 36 inch-pounds (4 N•m) torque only.*

(4) Back off adjusting screw two turns on 999 and two and one-half turns on 727.

(5) Hold adjusting screw in position and tighten locknut to 35 foot-pounds (47 N•m) torque.

SPECIFICATIONS

Transmission Specifications

	MODEL 999	MODEL 727
Clutch Plate Clearance		
Front Clutch	3 Disc 0.074 to 0.125 inch 4 Disc 0.067 to 0.134 inch 5 Disc 0.075 to 0.152 inch	3 Disc 0.070 to 0.129 inch 4 Disc 0.082 to 0.051 inch
Rear Clutch	3 and 4 Disc 0.032 to 0.55 inch	4 Disc 0.025 to 0.045 inch
Clutch Component Thickness Tolerance		
Front Clutch		
Lined Plate	0.083 to 0.088 inch	0.090 to 0.095 inch
Steel Plate	0.066 to 0.071 inch	0.066 to 0.071 inch
Pressure Plate	0.244 to 0.218 inch	0.278 to 0.282 inch
Rear Clutch		
Lined Plate	0.060 to 0.065 inch	0.060 to 0.065 inch
Steel Plate	0.066 to 0.071 inch	0.066 to 0.071 inch
Flat Pressure Plate	0.214 to 0.218 inch	0.278 to 0.282 inch
Formed Pressure Plate	0.409 to 0.413 inch	0.441 to 0.445 inch
Clutches		
Number of Front Clutch Plates	5	4
Number of Front Clutch Discs	5	4
Number of Rear Clutch Plates	3	3
Number of Rear Clutch Discs	4	4

70122A

Transmission Specifications (Continued)

	MODEL 999		MODEL 727	
	U.S. Measure	Metric Measure	U.S. Measure	Metric Measure
Torque Converter Diameter	10.75 inches			
Oil Capacity - Transmission and Torque Converter	17. pts.	7.9 liters	17 pts.	7.9 liters
Cooling Method - All Models	Water-Heat Exchanger (In Radiator Lower Tank)			
Lubrication - All Models	Rotor Type Pump			
Gear Ratios - All Models	First	Second	Third	Reverse
	2.45 to 1	1.45 to 1	1.00 to 1	2.20 to 1
Pump Clearances				
Outer Rotor to Case Bore	.004 to .008 inch			
Outer to Inner Tip	.005 to .010 inch			
End Clearance-Rotors	.001 to .003 inch		.001 to .002 inch	
Gear Train End Play	.001 to .047 inch		.009 to .044 inch	
Input Shaft End Play	.016 to .059 inch		.036 to .084 inch	
Snap Rings				
Front and Rear Clutches Rear Snap Ring (Selective)	.060 to .062 inch		.060 to .062 inch	
	.068 to .070 inch		.074 to .076 inch	
	.076 to .078 inch		.088 to .090 inch	
Output Shaft (Forward End)	.040 to .044 inch		.106 to .108 inch	
	.048 to .052 inch		.055 to .059 inch	
	.059 to .065 inch		.062 to .066 inch	

70122B

Band Adjustments

	999	727
Front Band Turns	2	2-1/2
Rear Band Turns	4	2

NOTE: 999/727 backed off from 72 inch-lb (8 N.m).

70130

Thrust Washer Chart

Thrust Washers	Thrust Washer No. and Transmission Model			
	999		727	
Reaction Shaft Support to Front Clutch Retainer	No. 1	.061 to .063	No. 1	Selective .061 to .063 – Natural .084 to .086 – Red .102 to .104 – Yellow
Rear Clutch to Front Clutch Retainer	No. 2	.061 to .063	No. 2	.061 to .063 – Natural
Output Shaft to Input Shaft	No. 3	Selective .052 to .054 – Tin .068 to .070 – Red .083 to .085 – Green	No. 3	.062 to .064
Front Annulus Support to Rear Clutch Retainer	No. 4	.121 to .125		——
Front Annulus Support to Front Planetary Gear	No. 5	.048 to .050	No. 4	.059 to .062
Driving Shell to Front Annulus Gear		——	No. 5	.060 to .062
Front Planetary Gear to Driving Shell	No. 6	.048 to .050		——
Sun Gear and Driving Shell Front Thrust Plate	No. 7	.050 to .052	No. 6	.034 to .036
Sun Gear and Driving Shell Rear Thrust Plate	No. 8	.050 to .052		——
Rear Planetary Gear to Driving Shell	No. 9	.048 to .050	No. 7	.059 to .062
Rear Planetary Gear to Rear Annulus Gear		——	No. 8	.034 to .036
Rear Planetary Gear to Rear Annulus Support	No. 10	.048 to .050		——

60517

Torque Specifications

Service Set-To Torques should be used when assembling components. Service In-Use Recheck Torques should be used for checking a pre-tightened item.

	USA (ft-lbs)		Metric (N·m)	
	Service Set-To Torque	Service In-Use Recheck Torque	Service Set-To Torque	Service In-Use Recheck Torque
Cooler Line Fitting	160 in-lb	120-200 in-lb	18	14-23
Cooler *Line Nut*	150 in-lb	130-180 in-lb	17	15-20
Converter Drive Plate to Crankshaft Bolts - 4 Cylinder	58	50-56	79	68-89
Converter Drive Plate to Crankshaft Bolts - 6 Cylinder	105	95-120	142	129-163
Converter Drive Plate to Torque Converter Bolts - 4 Cylinder	40	35-40	54	47-54
Converter Drive Plate to Torque Converter Bolts - 6 Cylinder	26	22-30	35	30-44
Adapter Housing-to-Transmission Case Bolt	24	–	33	–
Governor Body Bolt	100 in-lb	–	11	–
Front Band Adjusting Screw Locknut	35	–	47	–
Kickdown Lever Shaft Plug	150 in-lb	–	17	–
Rear Band Adjusting Screw Locknut	35	–	47	–
Neutral Starter Switch	24	–	33	–
Oil Filler Tube Bracket Bolt	150 in-lb	–	17	–
Oil Pan Bolt	150 in-lb	9-13	17	12-18
Oil Pump Housing-to-Transmission Case Bolt	175 in-lb	–	20	–
Output Shaft Support Bolt	150 in-lb	–	17	–
Overrunning Clutch Cam Setscrew	40 in-lb	–	4	–
Pressure Test Port Plug	110 in-lb	–	12	–
Reaction Shaft Support to Oil Pump Bolt	160 in-lb	–	18	–
Transmission-to-Engine Bolt	28	22-30	38	30-41
Valve Body Screw	35 in-lb	–	4	–
Valve Body-to-Transmission Case Screw	100 in-lb	–	11	–

All torque values given in foot-pounds and newton-meters with dry fits unless otherwise specified.

70121

Tools

J-24043
VALVE BODY
SUPPORT STAND

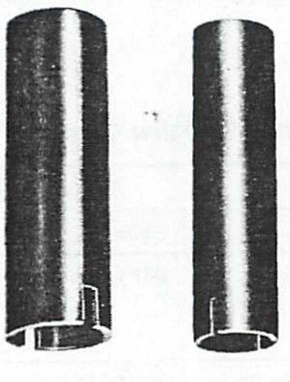

J-24045 (727) **J-24033 (999)**

PUMP ROTOR ALIGNMENT TOOLS

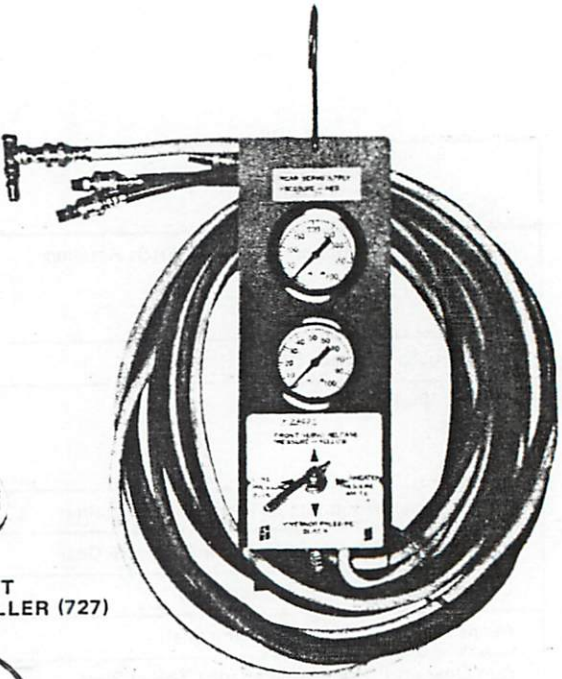

J-24027 PRESSURE TEST SET

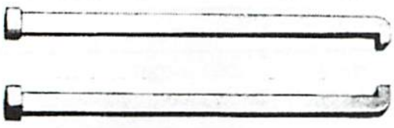

J-22205
FRONT PUMP OIL
SEAL REMOVER (LEGS)

J-24038
REACTION SHAFT
BUSHING INSTALLER (727)

J-24039
FRONT CLUTCH
RETAINER BUSHING
REMOVER AND
INSTALLER (727)

J-24031
KICKDOWN
VALVE GAUGE

J-24055
OIL PUMP BUSHING
REMOVER AND INSTALLER (727)

J-24044
DETENT BALL
RETAINER

Tools (Continued)

J-9617
FRONT PUMP OIL
SEAL INSTALLER (999)

J-21005
FRONT PUMP OIL
SEAL INSTALLER (727)

J-24040
INPUT SHAFT
BUSHING INSTALLER (727)

J-24064
FRONT CLUTCH BUSHING
REMOVER AND INSTALLER (999)

J-24049
OIL PUMP BUSHING
REMOVER AND INSTALLER (999)

J-23327 FRONT
CLUTCH SPRING
COMPRESSOR (999)

J-24063
KICKDOWN BAND
ADJUSTMENT ADAPTOR

J-24108 J-3387-2

PILOT STUDS

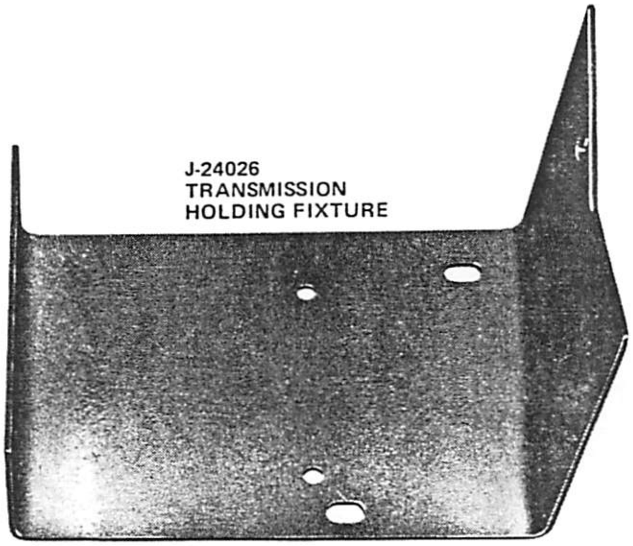

J-24026
TRANSMISSION
HOLDING FIXTURE

J-24036
REACTION SHAFT
BUSHING REMOVER (999)

J-24041
INPUT SHAFT
BUSHING REMOVER (727)

J-24037
REACTION SHAFT
BUSHING REMOVER (727)

J-24042
FRONT CLUTCH SPRING
COMPRESSOR AND
OVERRUNNING CLUTCH
CAM INSTALLER (727)

J-21232-01
FRONT PUMP OIL
SEAL REMOVER
(STEERING WHEEL
PULLER)

J-24036
REACTION SHAFT
BUSHING REMOVER (999)

J-24048
EXTENSION HOUSING
BUSHING REMOVER
AND INSTALLER (727)

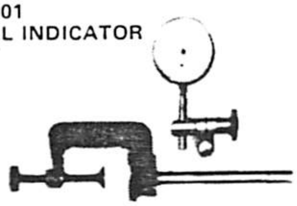

J-8001
DIAL INDICATOR
SET

41816

NOTES

NOTES

NOTES

HYDRAULIC FLOW CHARTS

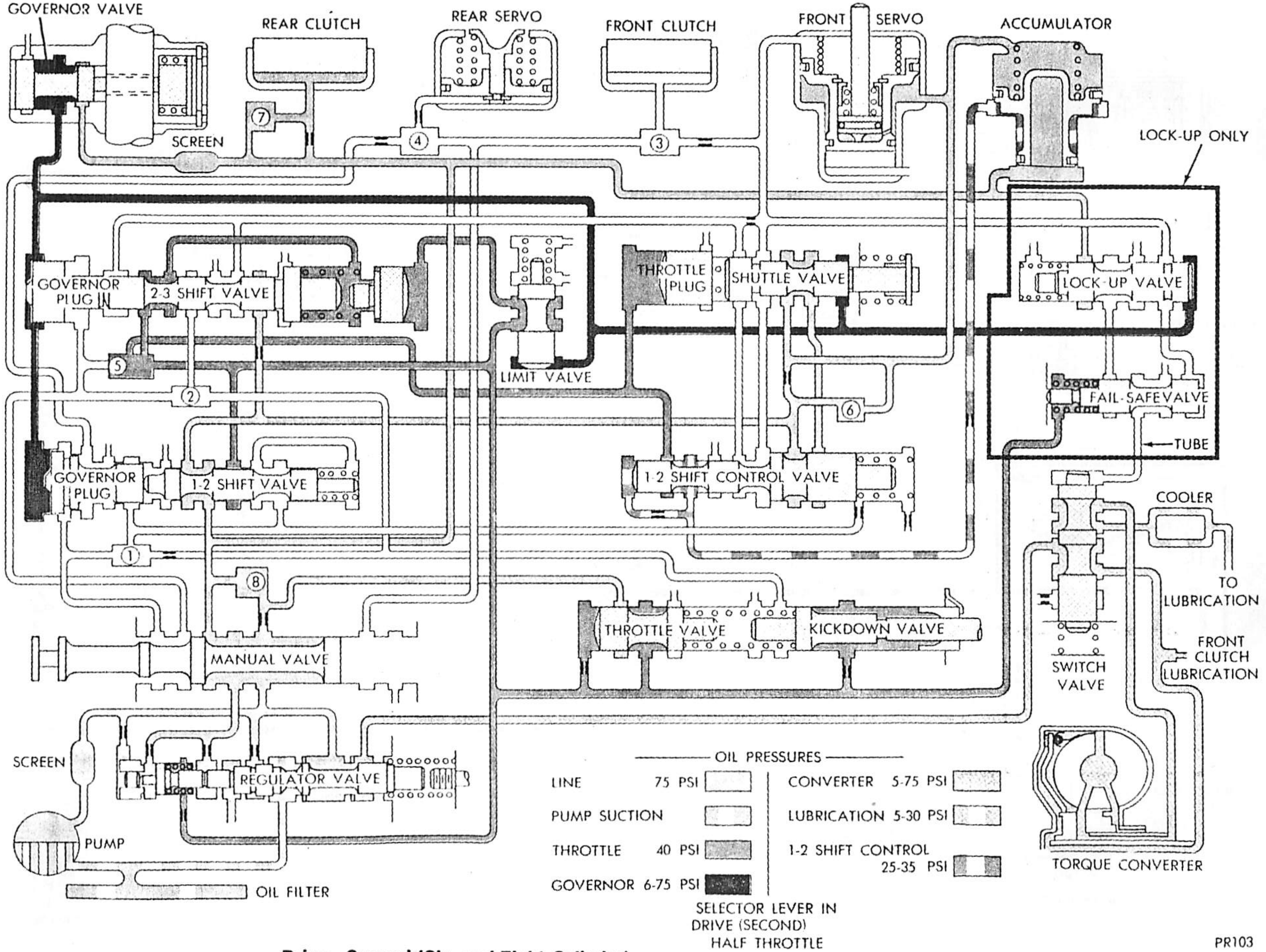

Drive—Second (Six- and Eight-Cylinder)

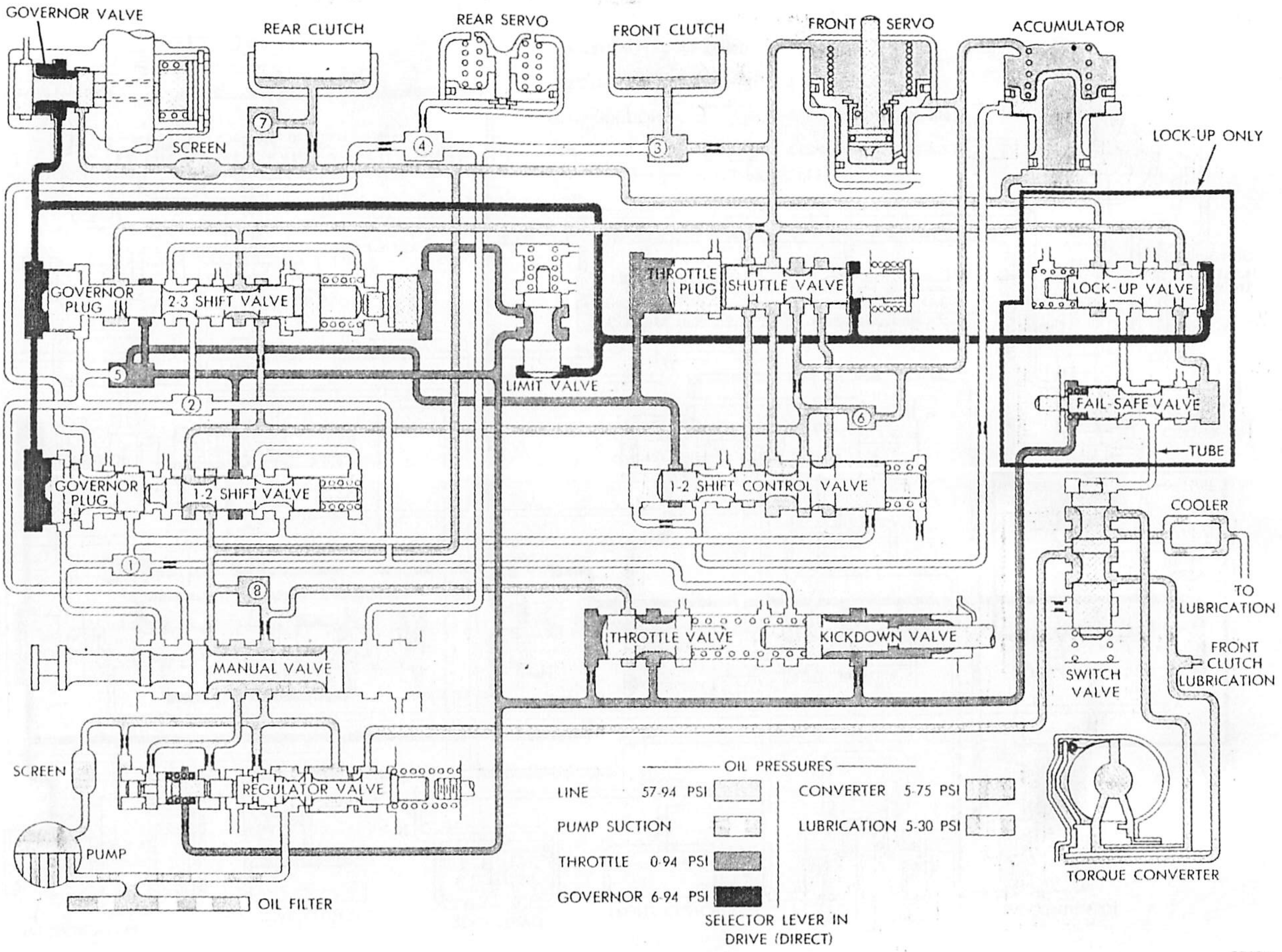

Drive—Direct (Six- and Eight-Cylinder)

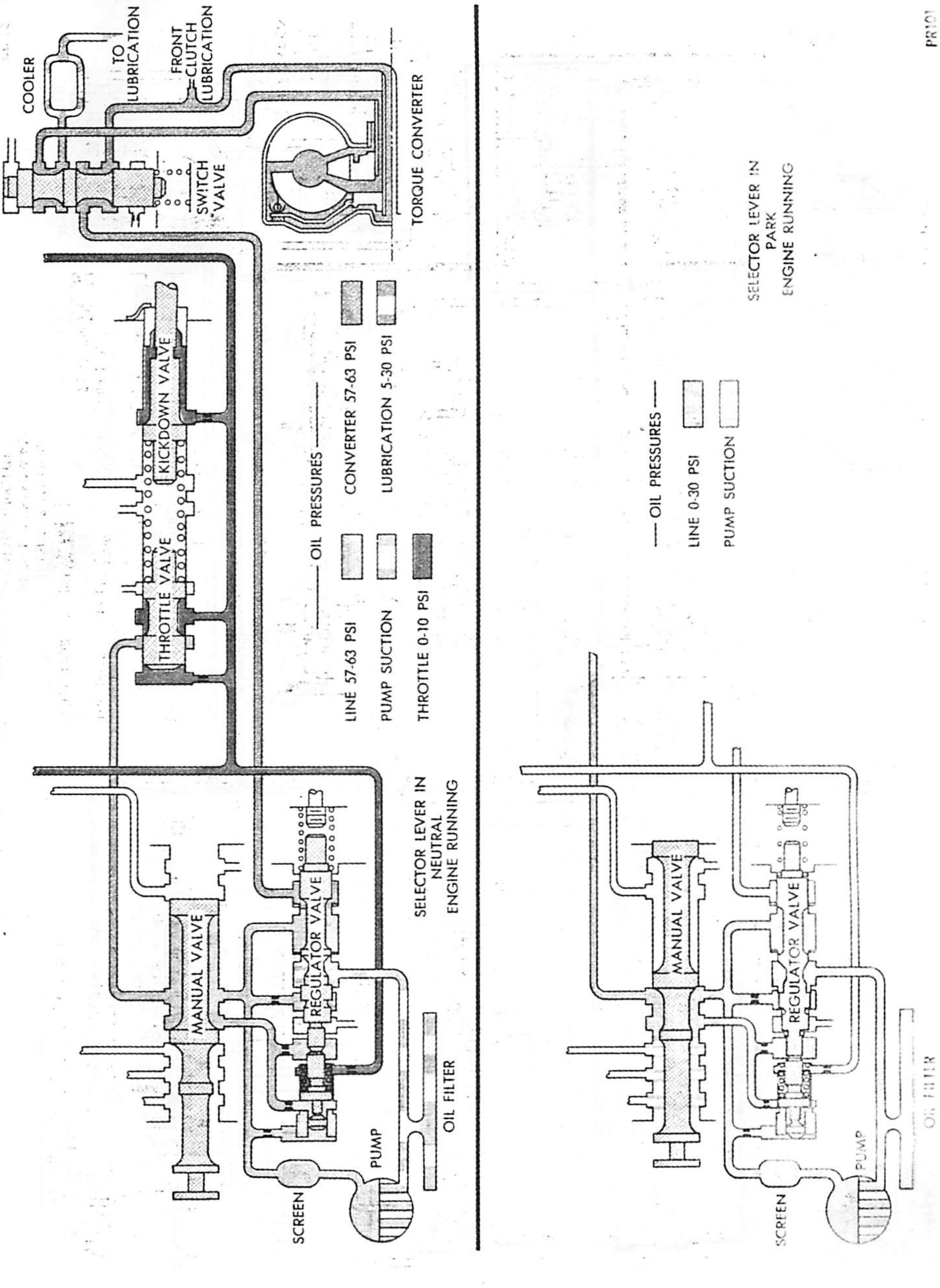

Park and Neutral (All)

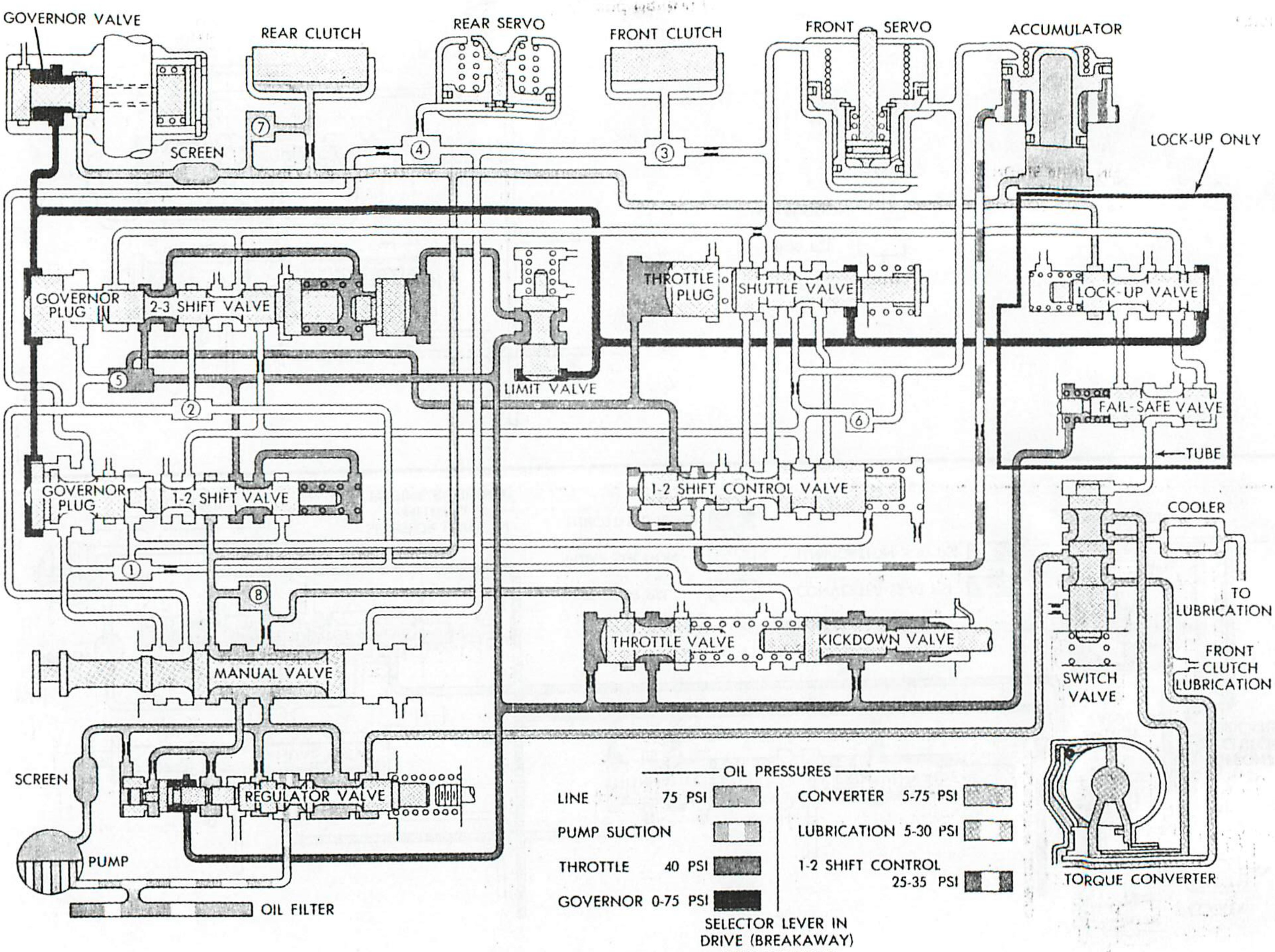

Drive—Breakaway (Six- and Eight-Cylinder)

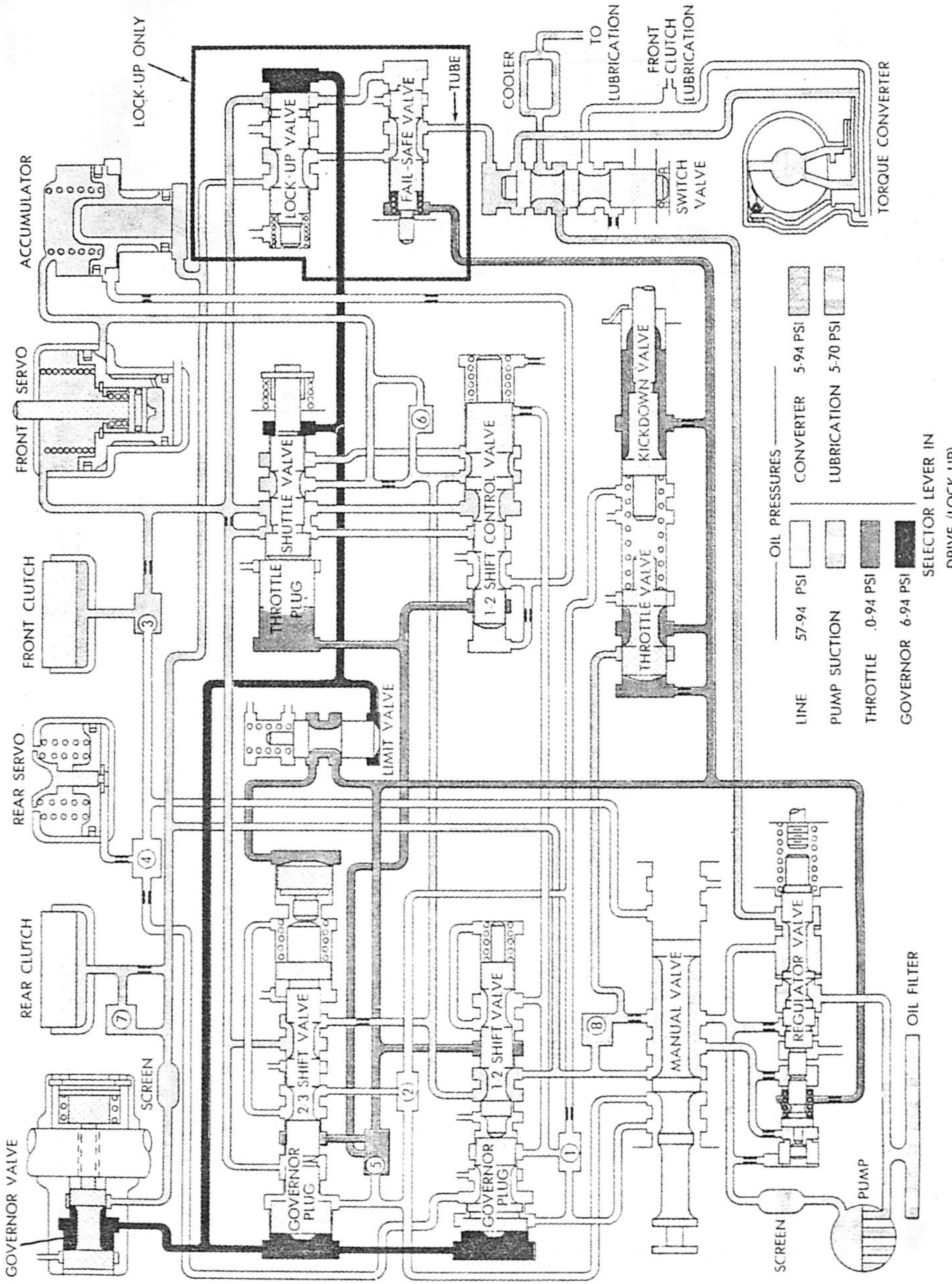

Drive—Direct Lockup (Six- and Eight-Cylinder)

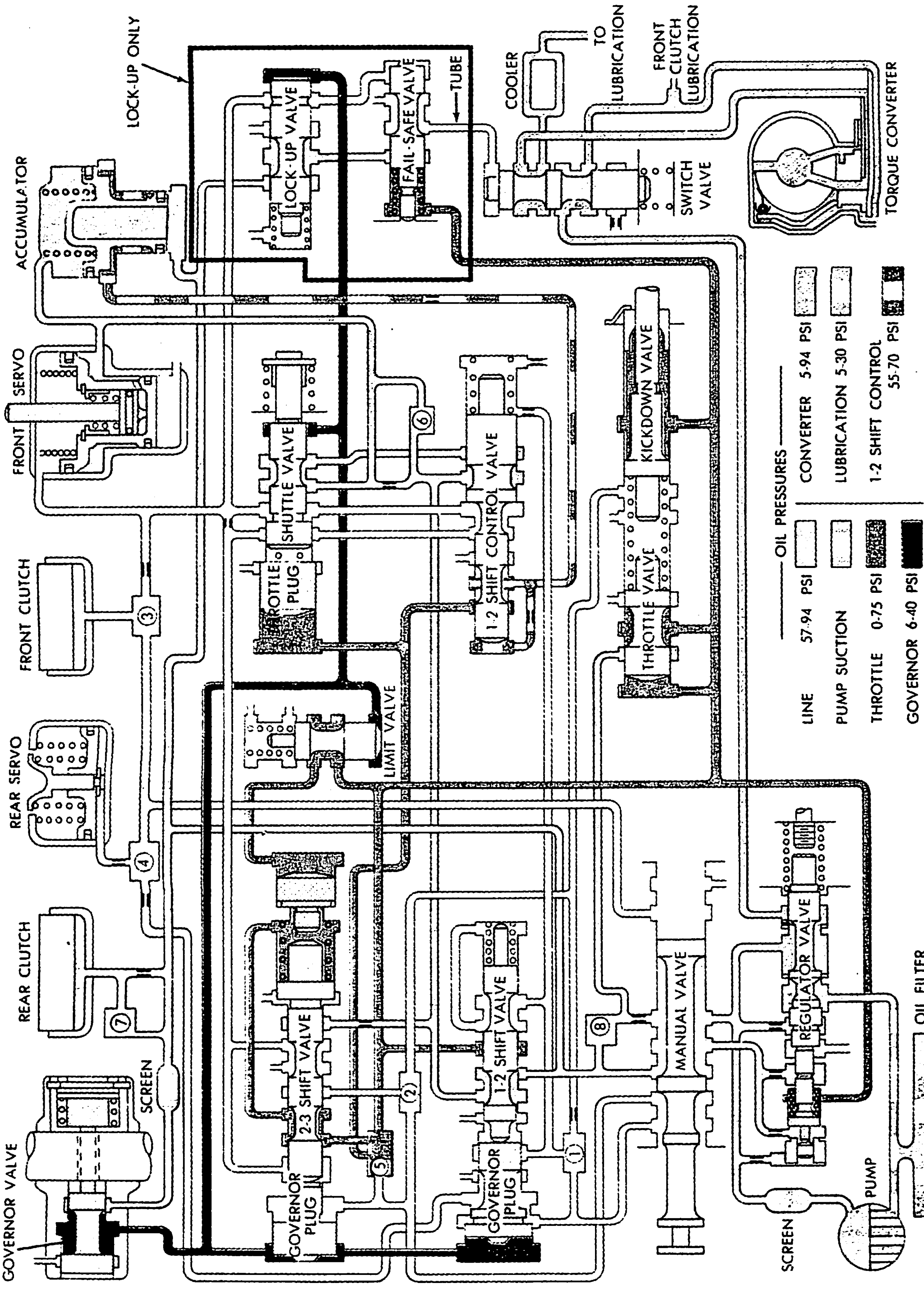

Drive—Part Throttle Kickdown (Six- and Eight-Cylinder)

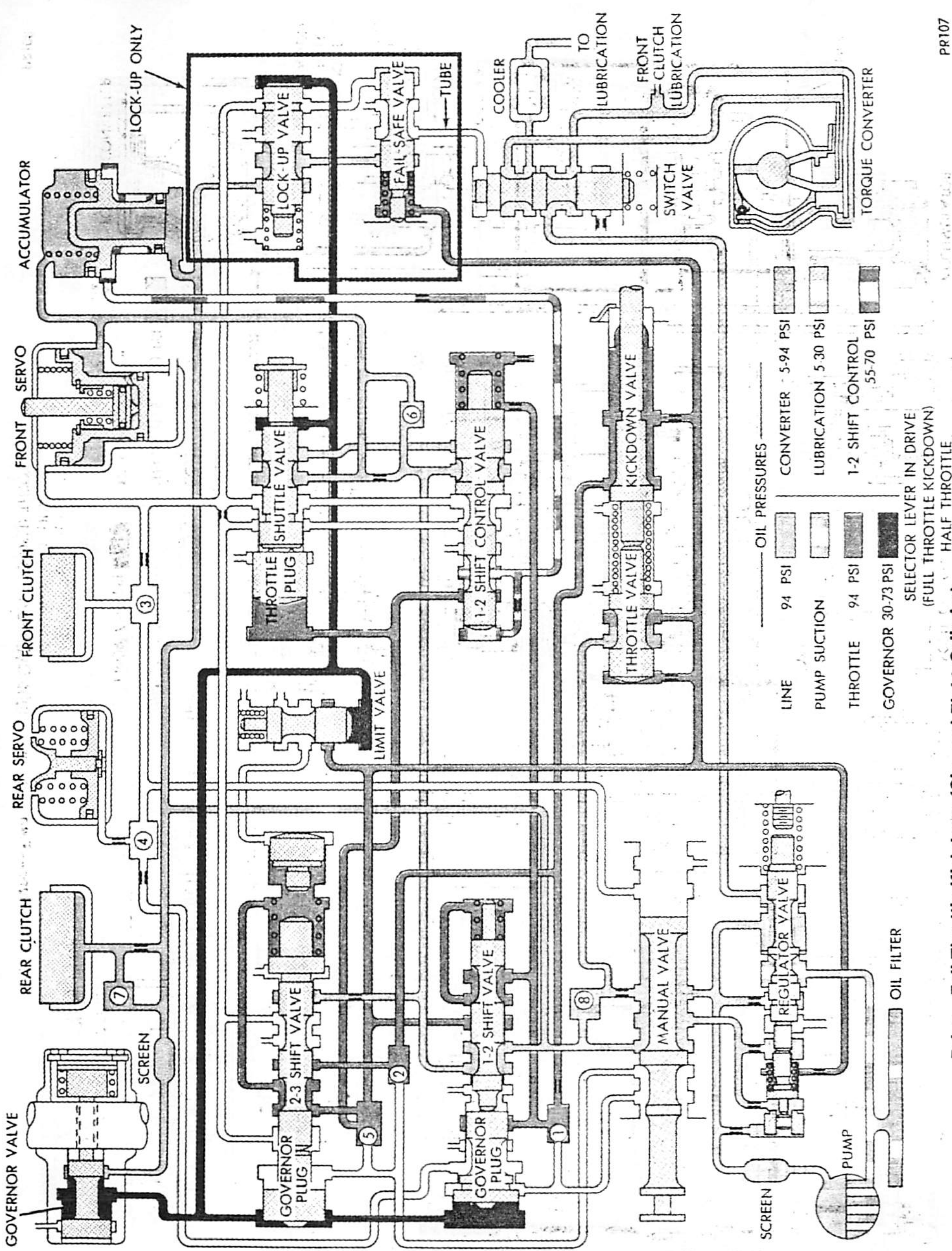

Drive—Full Throttle Kickdown (Six- and Eight-Cylinder)

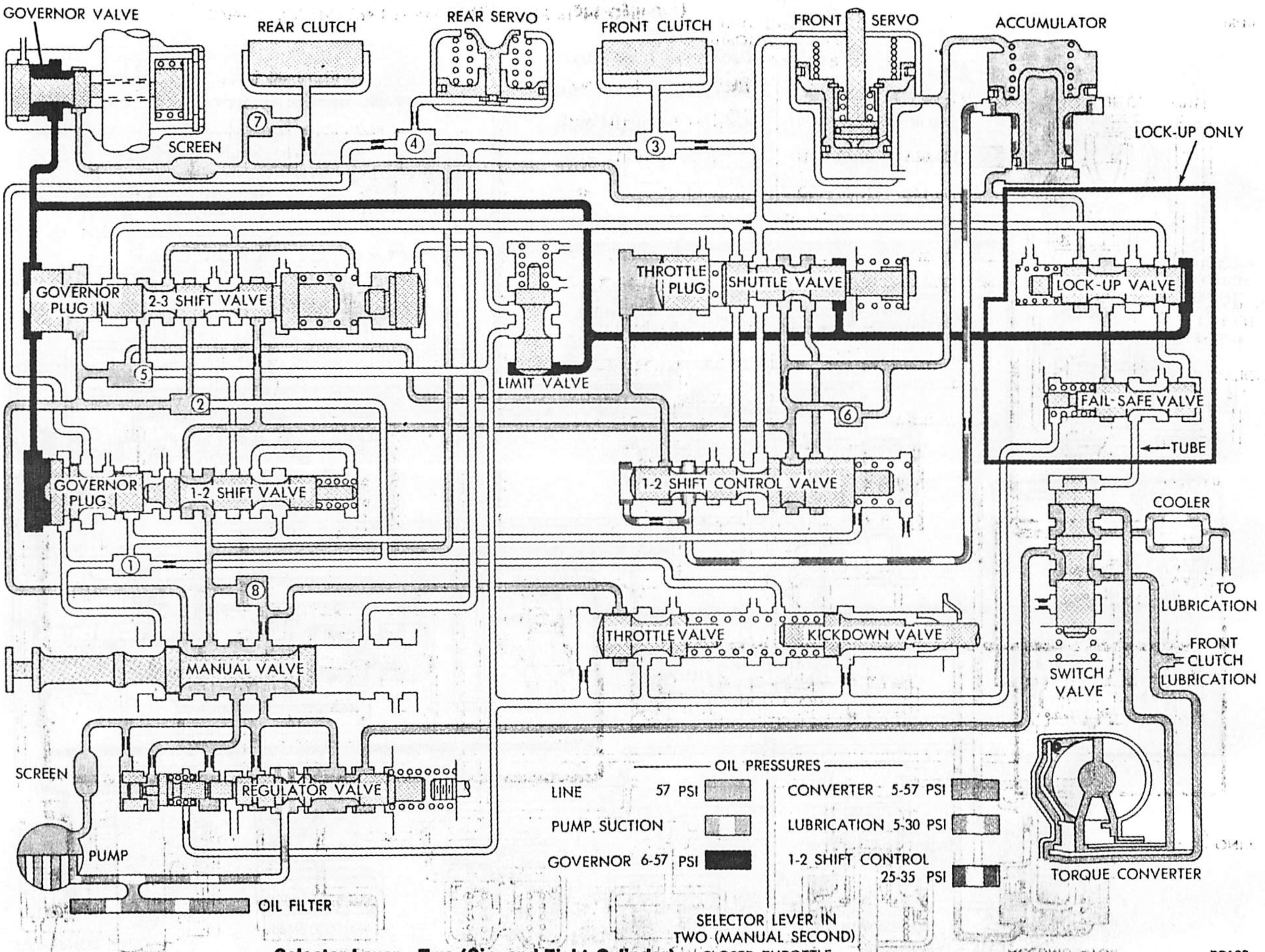

Selector Lever—Two (Six- and Eight-Cylinder)

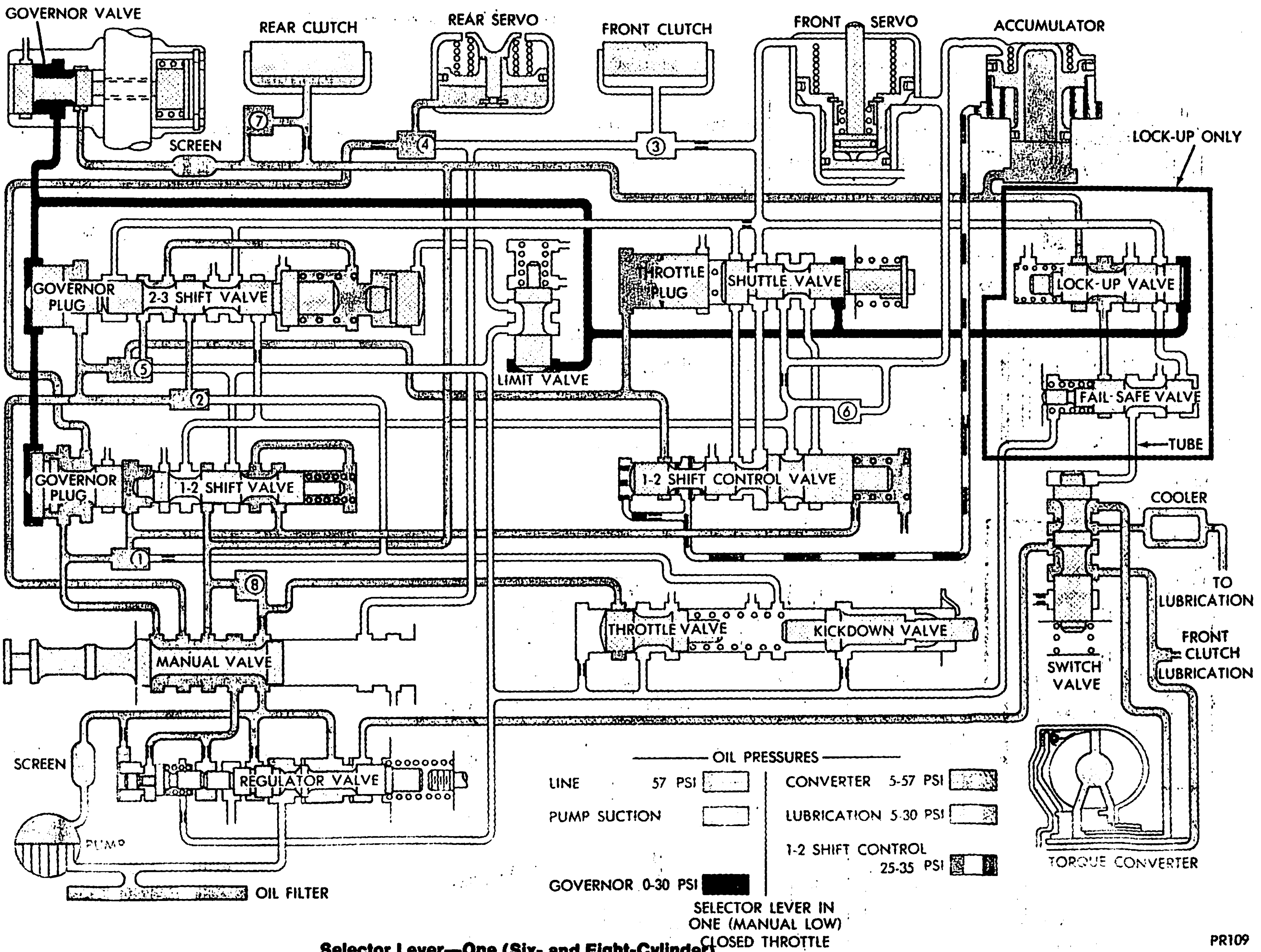

Selector Lever—One (Six- and Eight-Cylinder)

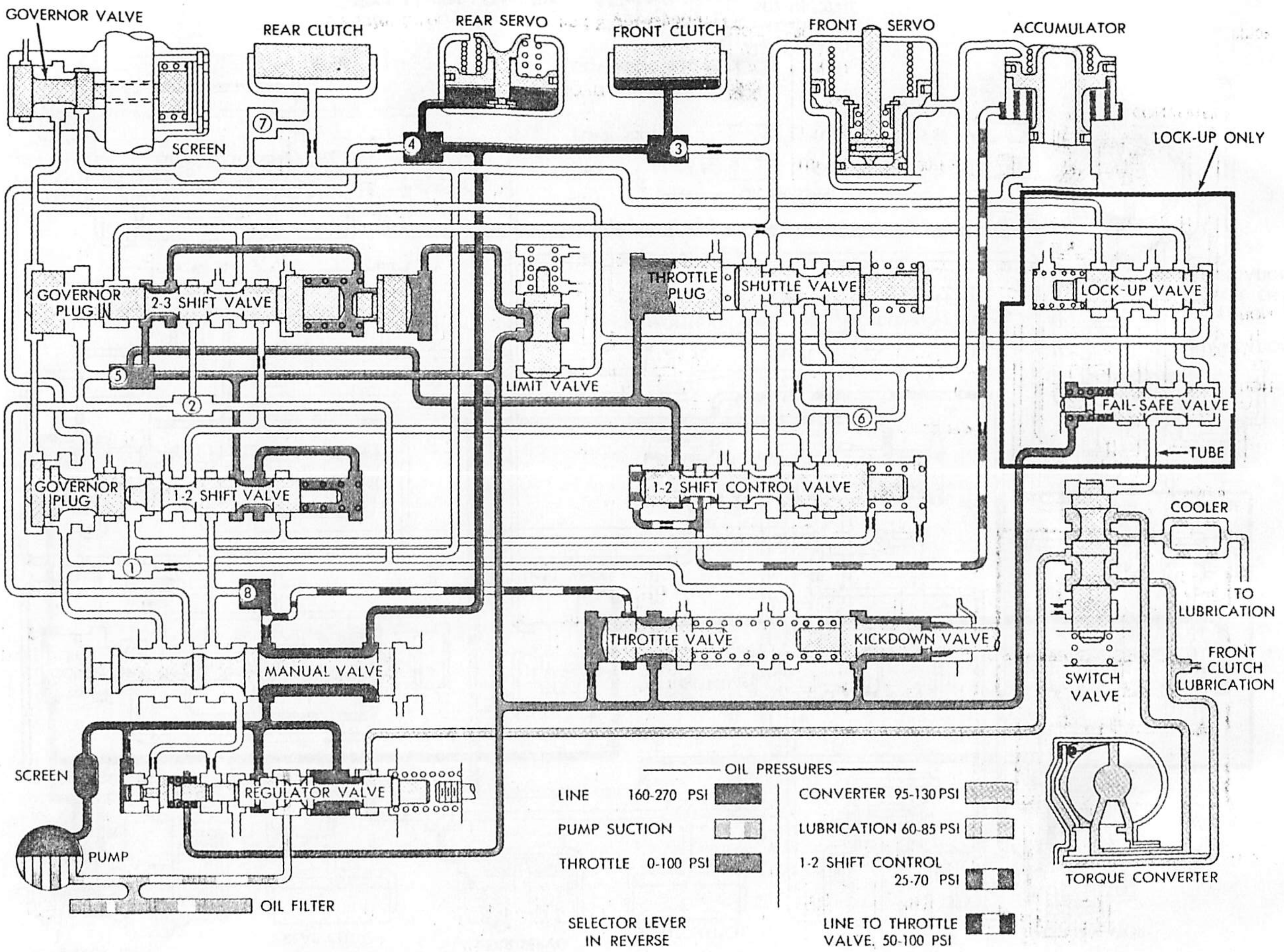

Reverse (Six- and Eight-Cylinder)

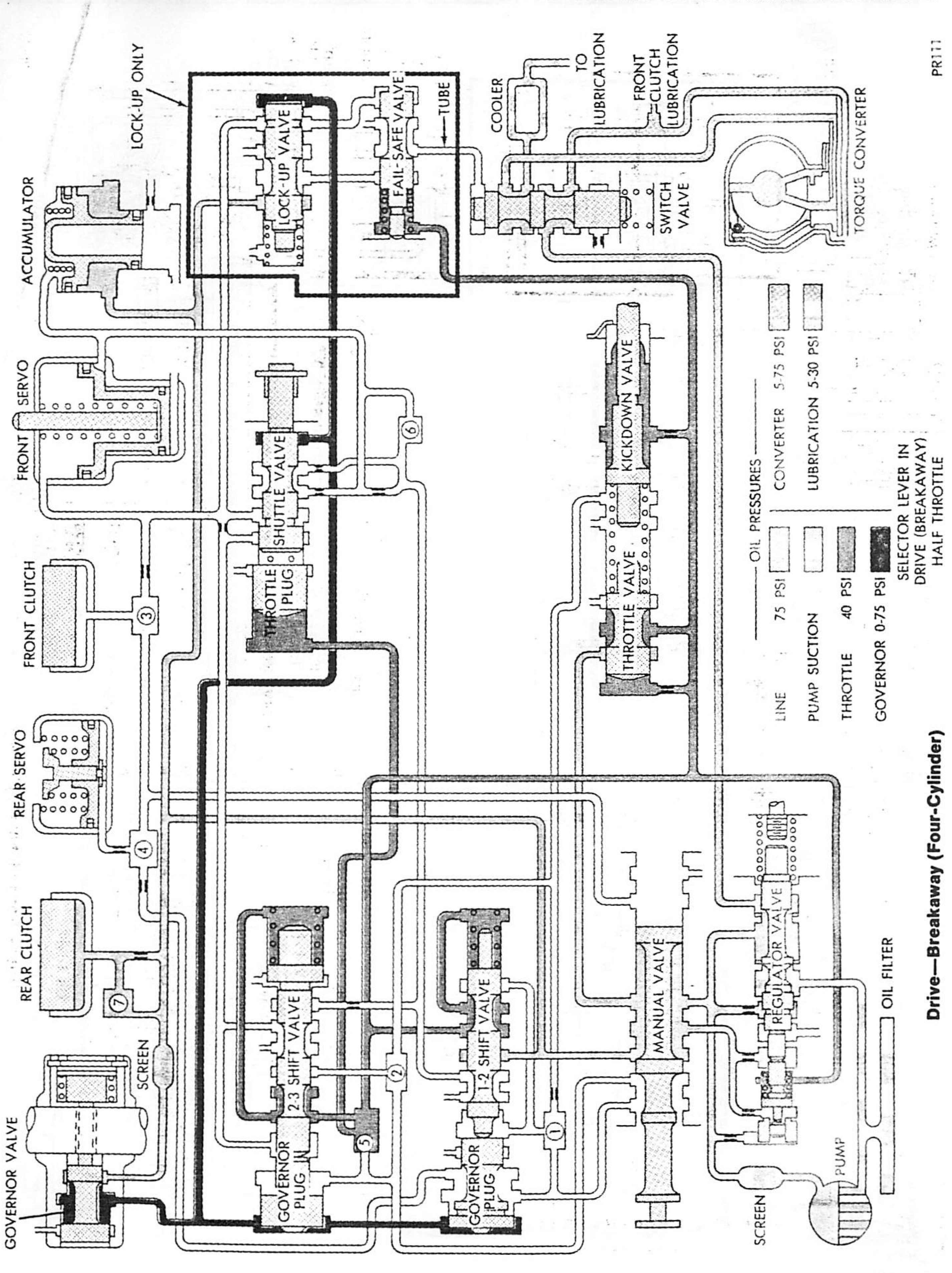

Drive—Breakaway (Four-Cylinder)

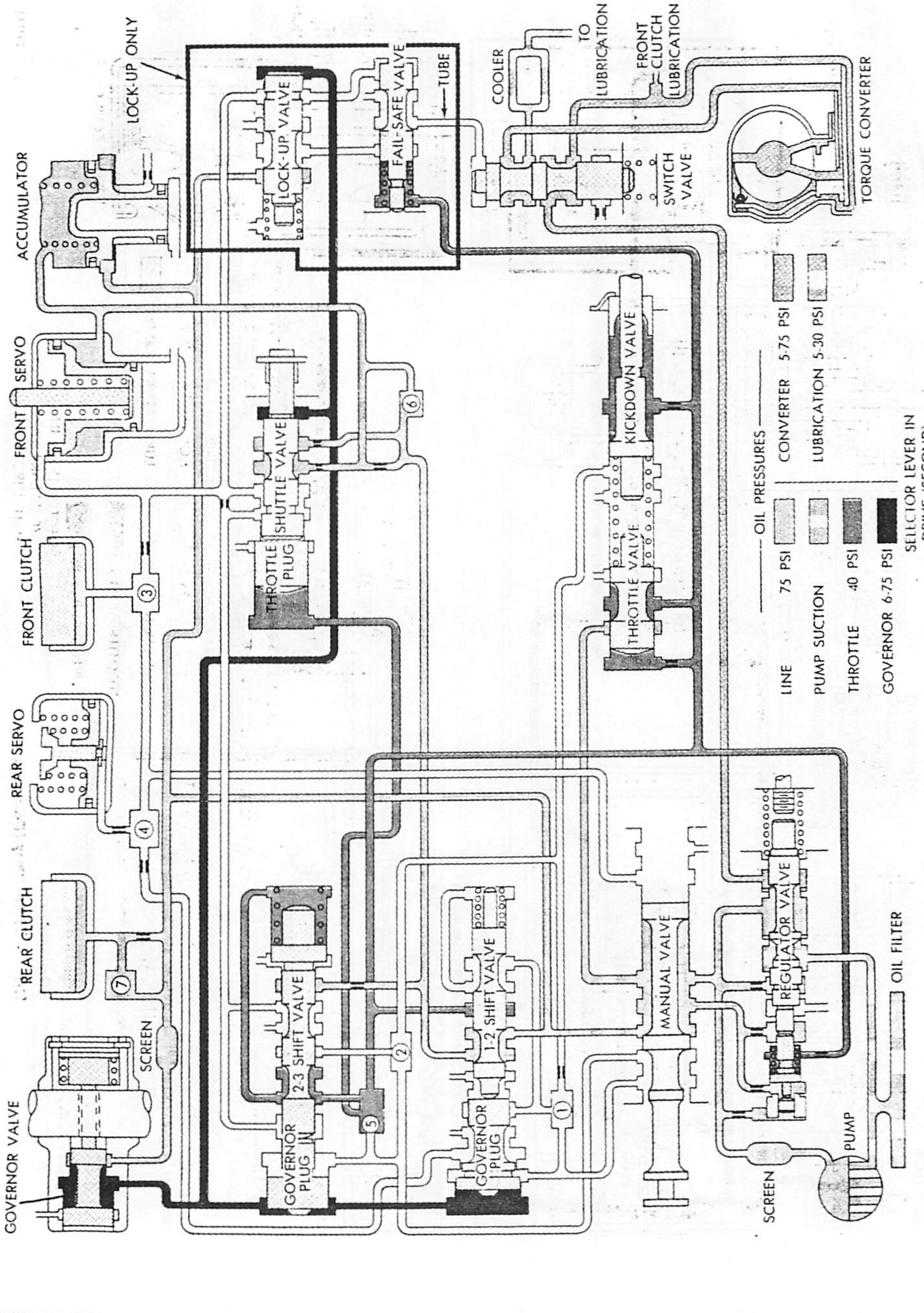

Drive—Second (Four-Cylinder)

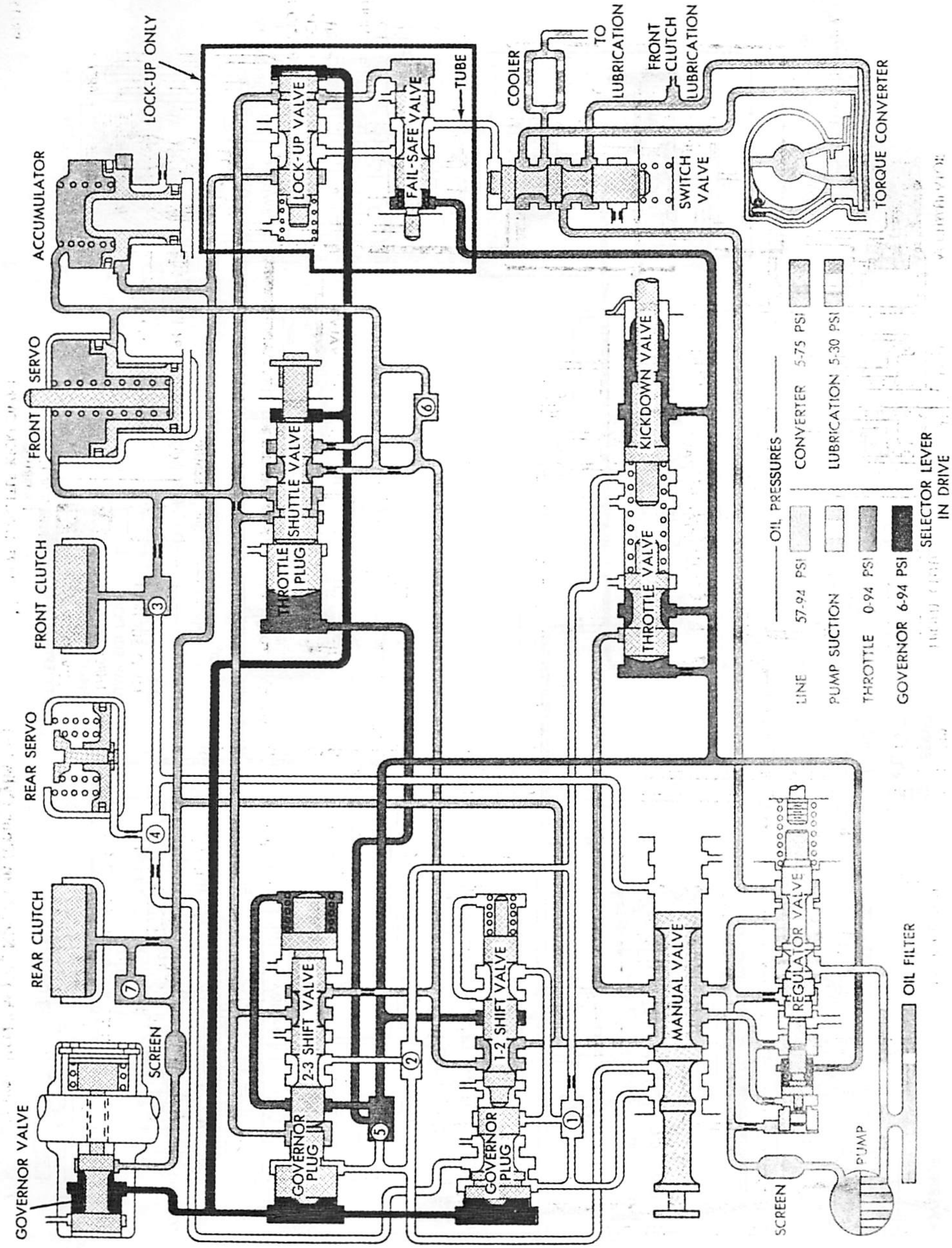

Drive—Direct (Four-Cylinder)

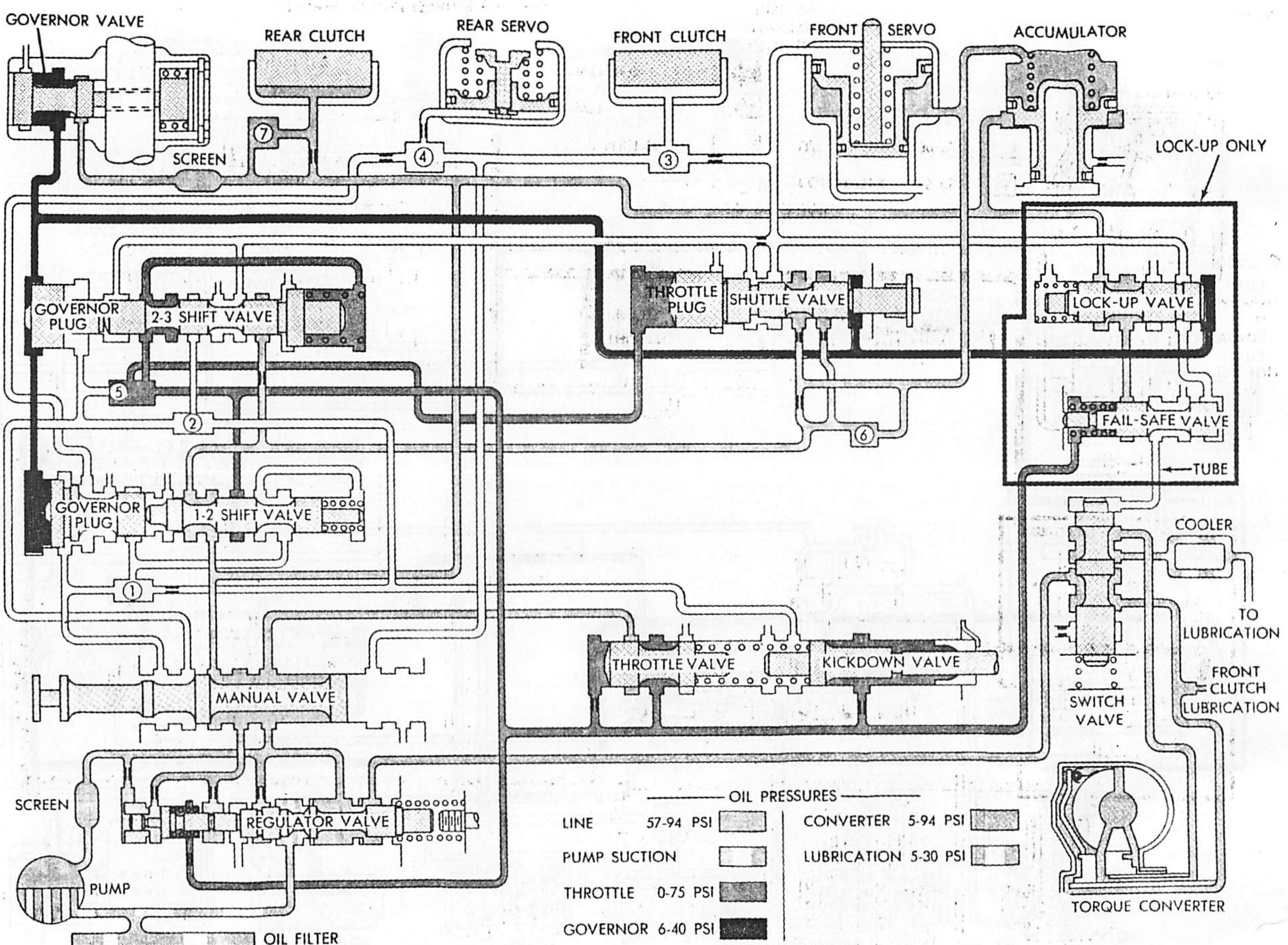

SELECTOR LEVER
IN DRIVE
(PART THROTTLE KICKDOWN)

Drive—Part Throttle Kickdown (Four-Cylinder)

PR115

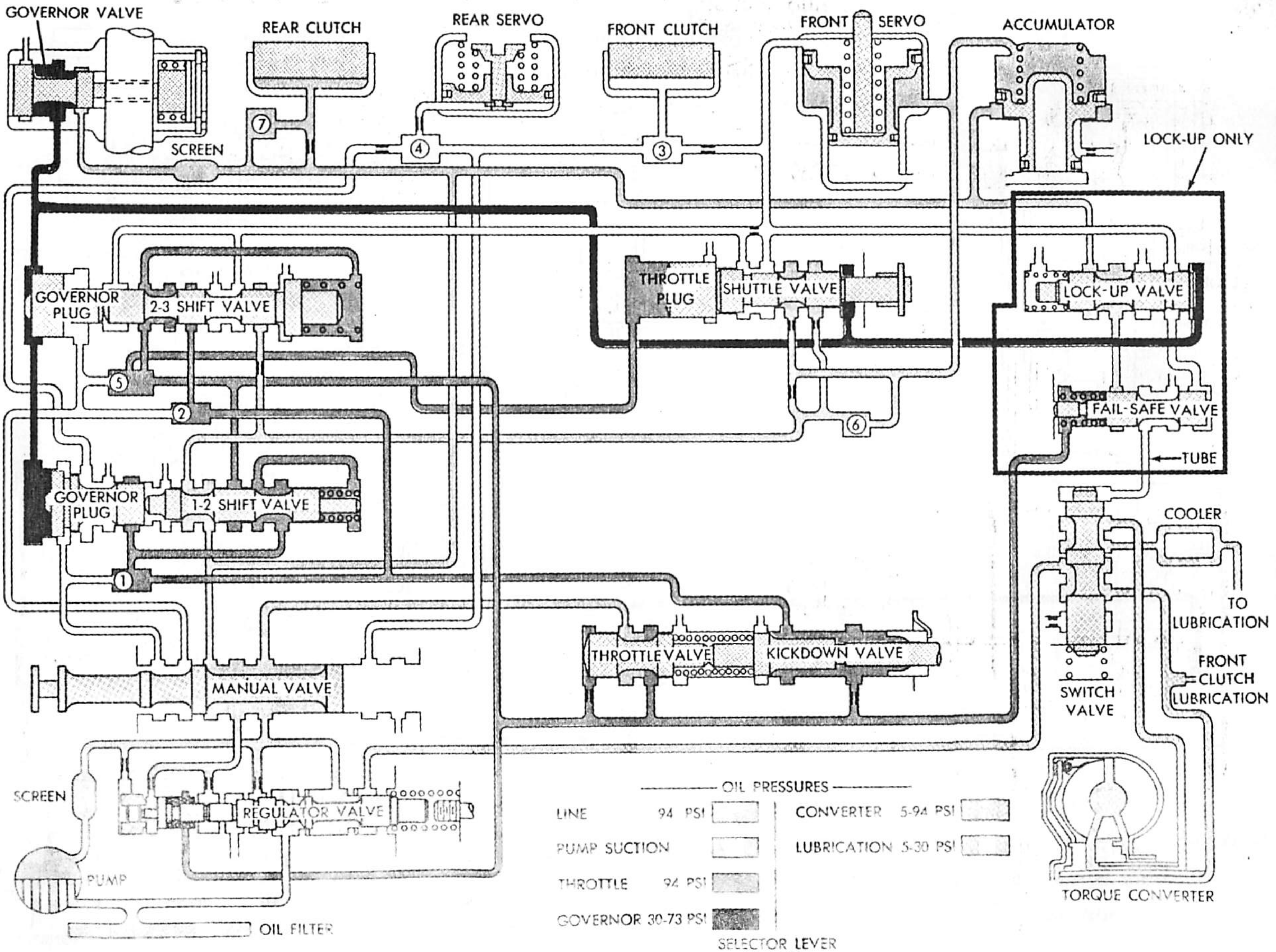

Drive—Full Throttle Kickdown (Four-Cylinder)

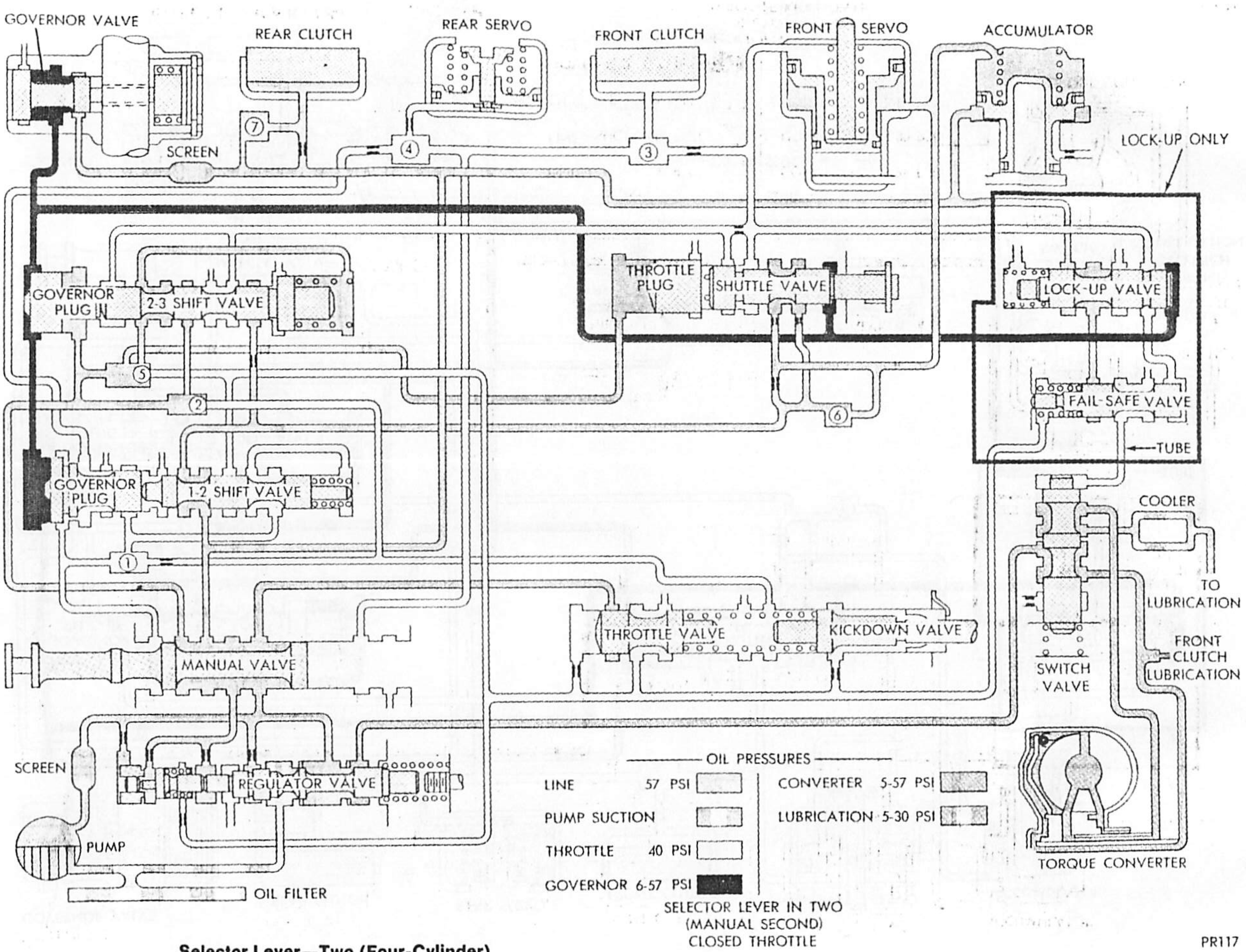

Selector Lever—Two (Four-Cylinder)

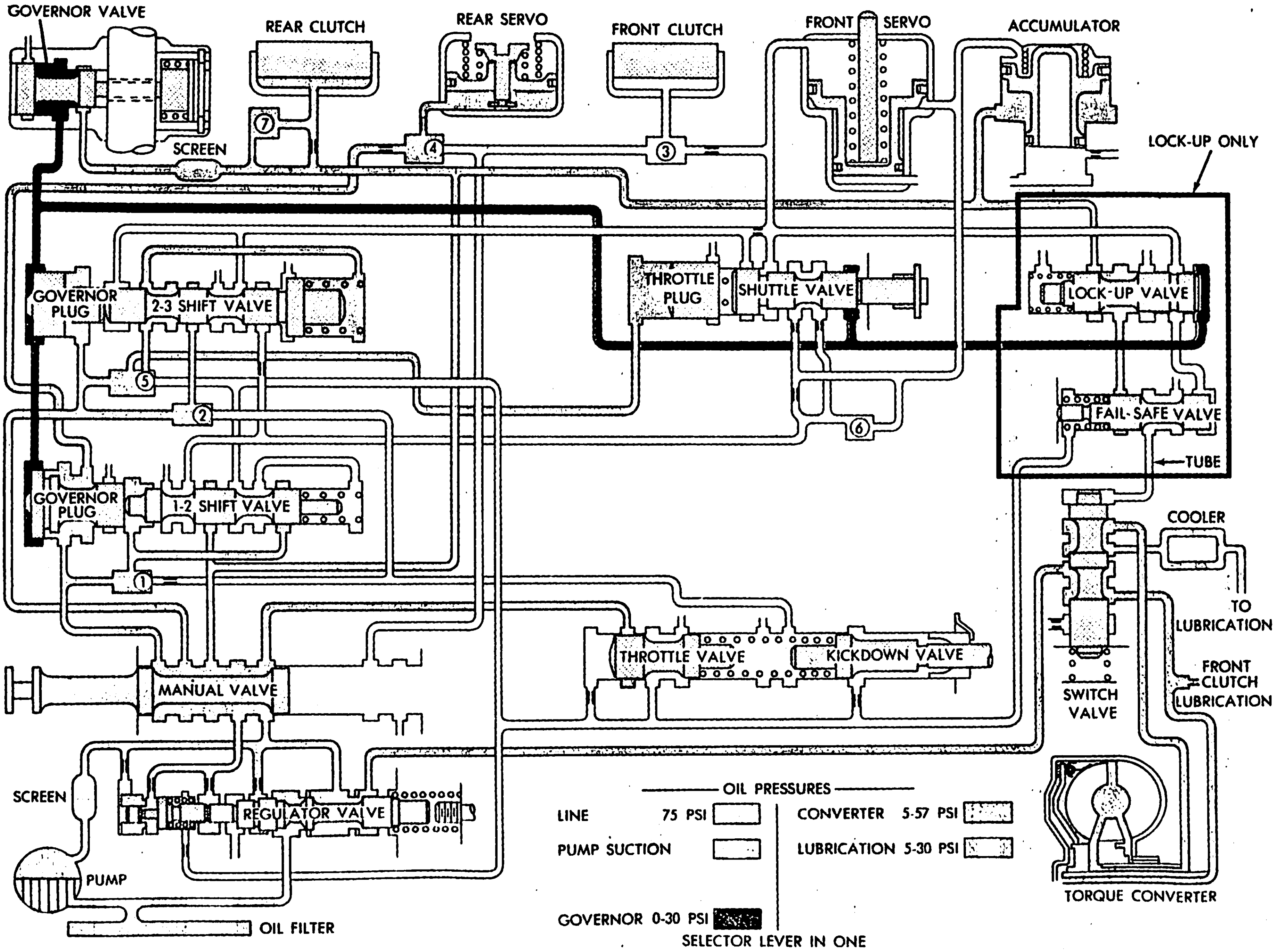

Selector Lever—One (Four-Cylinder)

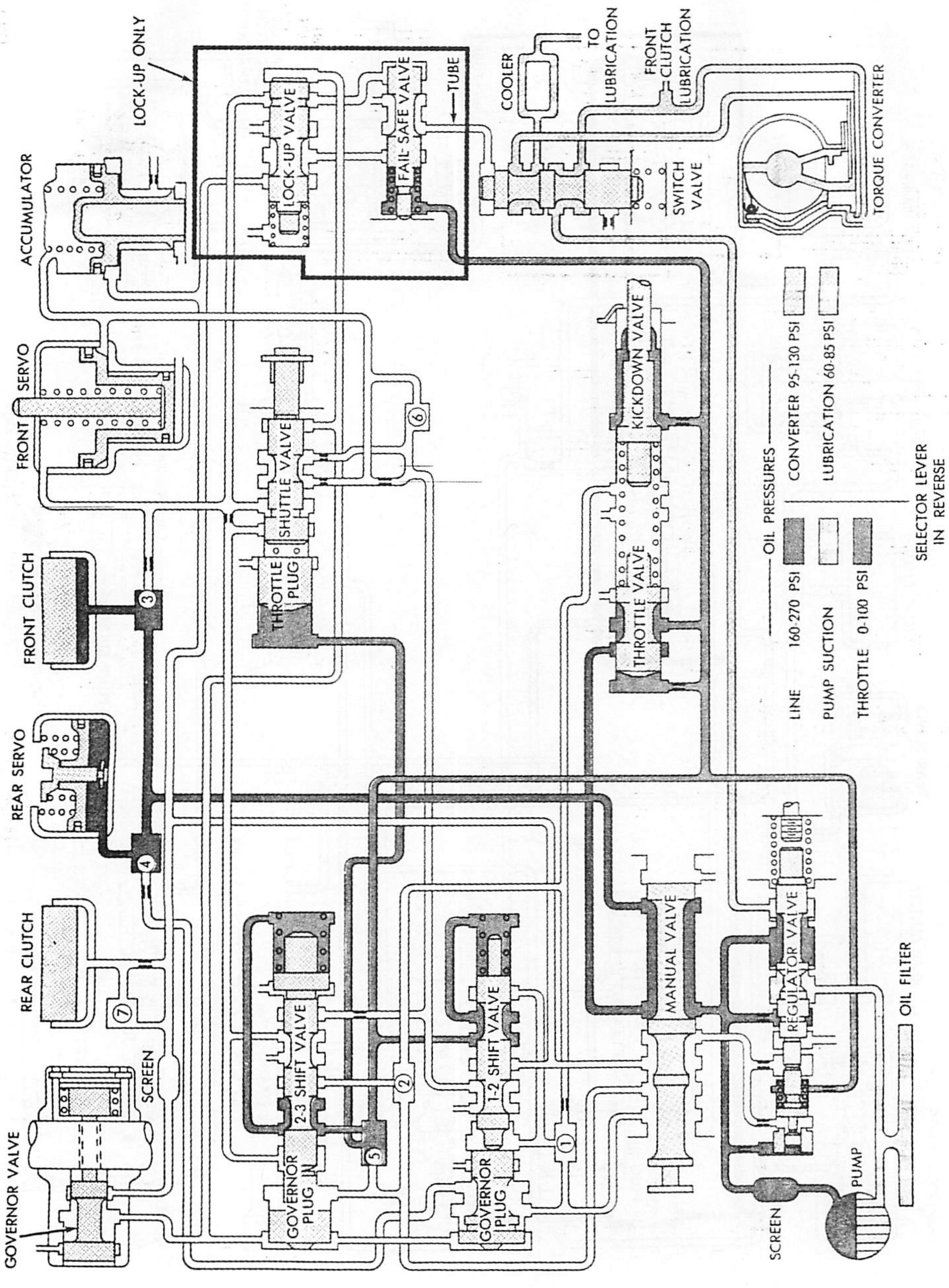

Reverse (Four-Cylinder)

TRANSFER CASE

2D

SECTION INDEX

GENERAL INFORMATION

GENERAL

Three transfer case models are used in Jeep vehicles. They are models 208, 219 and 300. Models 208 and 219 are aluminum case chain drive units and are used in Cherokee, Wagoneer and Truck models exclusively. Model 300 is a cast iron case gearbox type unit and is used in CJ and Scrambler models only. All three models have an integral four-wheel low range.

Model 208 is a four position unit providing four-wheel drive high and low ranges, a two-wheel high range and a neutral position. Model 208 is a part-time four-wheel drive unit. Torque input in four-wheel high and low ranges is undifferentiated. The range positions on the model 208 are selected by a floor mounted gearshift lever. Refer to the model 208 section for shift patterns. Model 208 is the standard equipment transfer case for Cherokee, Wagoneer and Truck models. Front drive hubs are also standard equipment on Jeep models equipped with this transfer case.

The model 219 Quadra-Trac, full time four-wheel drive transfer case is available as an option on Cherokee, Wagoneer and Truck models with automatic transmission only. This transfer case is also a four position unit providing four-wheel high and low ranges, a neutral position for towing and a four-high lock position for use only when the vehicle is immobile due to excessive wheel spin.

The model 219 provides fully differentiated operation in four-wheel high range. This is accomplished through a torque biasing viscous coupling.

The 219 is a chain drive unit employing two sprockets and an interconnecting drive chain. Th range positions are selected by a floor mounted gea lever. Refer to the model 219 section for shift patte

NOTE: *Front drive hubs are not available nor r mended for vehicles equipped with the mode Quadra-Trac transfer case.*

Model 300 is a cast iron case, four position ge type transfer case. It is used in CJ and Scrambler els only and provides four-wheel high and low ran neutral position and a two-wheel drive high r Model 300 is a part-time unit. Torque input in wheel high and low ranges is undifferentiated.

TOWING

Emergency Towing

If the vehicle is disabled and is to be towed wit front or rear wheels off the ground, towing speed s be limited to 30 mph (48 km/h) for a distance no gr than 15 miles (24 km).

Towing Vehicles with Manual Transmission and Model 208 or 30 Transfer Case

Ignition Key Available: Shift transmission and t fer case into Neutral. Vehicle can now be towed wi four wheels on the ground or with front or rear wheels raised. Turn front drive hubs to 4 x 4 or Lock position. Turn ignition key to Off position to unlock steering column.

Ignition Key Not Available and Vehicle is Unlocked: Shift transmission and transfer case into Neutral and tow vehicle with front wheels raised.

Ignition Key Not Available and Vehicle is Locked: Place dolly under rear wheels and tow vehicle with front end raised. Or, disconnect rear propeller shaft at rear axle yoke (be sure to mark the shaft and yoke for proper alignment at reassembly), secure shaft to underside of vehicle, and tow with front end raised.

NOTE: *On CJ and Scrambler models, when towing vehicle over 200 miles (300 km), stop towing every 200 miles (300 km). With the transfer case still in N (Neutral) and transmission in gear, start engine and rev engine for about one minute to circulate oil in the transfer case.*

Towing Vehicle with Automatic Transmission and Model 208 or 300 Transfer Case

Ignition Key Available: Turn ignition key to Off position to unlock steering column and gearshift selector linkage. Move gearshift lever to Park and transfer case shift lever to Neutral.

Ignition Key Not Available: Place dolly under rear wheels and tow vehicle with front end raised. Or, disconnect rear propeller shaft at rear axle yoke (index mark yoke for correct assembly), secure shaft to underside of vehicle, and tow with front wheels raised.

NOTE: *On CJ and Scrambler models, when towing vehicle over 200 miles (300 km), stop towing every 200 miles (300 km) and with the transfer case still in N (Neutral), start engine, place automatic transmission in D (Drive), and rev engine for about one minute to circulate oil in the transfer case.*

Towing Vehicle with Automatic Transmission and Model 219 Quadra-Trac Transfer Case

Ignition Key Available: Vehicle can be towed with all four wheels on the ground without disconnecting propeller shafts. Turn ignition key to Off position to unlock steering wheel. Move gearshift lever to Park and shift transfer case shift lever to Neutral position.

Ignition Key Not Available: Place dolly under rear wheels and tow vehicle with front wheels raised. Or, disconnect rear propeller shaft at rear axle (mark yoke for correct assembly), secure shaft to underside of vehicle, and tow with front wheels raised.

Recreational Towing

Jeep vehicles can be towed behind a recreational vehicle such as a motor home. but the following instructions must be followed to avoid damaging drive line components. Also be sure to check and comply with federal, state and local laws or ordinances regarding this type of towing.

With Manual Transmission and Model 208 or Model 300 Transfer Case

(1) Turn ignition switch to Off position to unlock steering wheel.

(2) Shift transmission into gear and the transfer case into Neutral.

(3) Turn selective drive hubs to 4 x 4 or Lock position, for axle lubrication.

With Automatic Transmission and Model 208 or Model 300 Transfer Case

(1) Turn ignition switch to Off position to unlock steering wheel.

(2) Shift automatic transmission into Park.

(3) Shift transfer case into Neutral position.

(4) Turn selective drive hubs to 4 x 4 or Lock position for axle lubrication.

With Automatic Transmission and Model 219 Quadra-Trac Transfer Case

(1) Turn ignition switch to Off position to unlock steering wheel.

(2) Shift automatic transmission into Park.

(3) Shift transfer case into Neutral position.

Trailer Towing and Campers

The Jeep Corporation new vehicle warranty includes conditions and limitations for vehicles used in towing trailers or campers or installation of slide-in campers on Jeep Trucks. The requirements and recommendations in this manual and other factory literature must be followed in order to maintain this coverage.

In addition to the vehicle maintenance and servicing requirements set forth in this manual, the GVW and GAW ratings are of special significance. When a Jeep vehicle is to be used for trailer or camper towing, or slide-in camper installations in Jeep Trucks, it is extremely important that the GVW or GAW ratings not be exceeded by the addition of:

- The tongue weight of a trailer.
- The weight transferred to a Truck model by the mounting of a fifth-wheel trailer.
- The weight of a slide-in camper or any other type of truck camper.
- The weight of any other type of vehicle put in or on the towing vehicle.

Remember that additional items placed in or on the trailer or mounted camper will add to the load.

CAUTION: *Jeep Corporation will not be responsible for brake performance if the Jeep vehicle and trailer hydraulic brake systems are interconnected in any way. A separate brake system is recommended, and actually required in some states, for all trailers weighing 1,000 pounds (454 kg) or more.*

TRANSFER CASE SERVICE

All three transfer case models are fully serviceable units and can be disassembled for cleaning, inspection, overhaul and adjustment procedures. In-vehicle and out-of-vehicle servicing procedures are outlined in this chapter. Refer to the necessary subsection for service diagnosis, principles of operation and all servicing, lubrication, and adjustment procedures.

TRANSFER CASE SHIFT LINKAGE

Cherokee-Wagoneer-Truck with Manual Transmission

Removal

(1) Raise vehicle.

(2) Disconnect shift lever link from operating lever and transfer case shift lever (fig. 2D-1). Do not lose washers, grommets, and bushings that retain link in levers.

(3) Lower vehicle.

(4) Remove screws attaching shift lever boot to floorpan and slide boot upward on shift lever.

(5) Remove screws attaching shift lever support bracket to floorpan (fig. 2D-1).

(6) Remove knob from transfer case shift lever.

(7) Slide shift lever out of boot and remove lever and support bracket as assembly.

(8) Remove shoulder bolt from support bracket and remove shift lever from bracket. Do not lose shift lever bushing or spring washer.

(9) Inspect lever, link, support bracket, shoulder bolt and bushings. Replace any component that is bent, cracked, broken, scored or excessively worn.

Installation

(1) Install shift lever bushing in shift lever (fig. 2D-1).

(2) Install shift lever in support bracket.

(3) Align lever bushing with holes in support bracket and install spring washer and shoulder bolt. Tighten bolt securely.

(4) Slide shift lever into boot and into floorpan hole.

(5) Position lever support bracket on floorpan and install bracket attaching screws.

(6) Install knob on shift lever.

(7) Raise vehicle.

(8) Install grommet in operating lever, if removed.

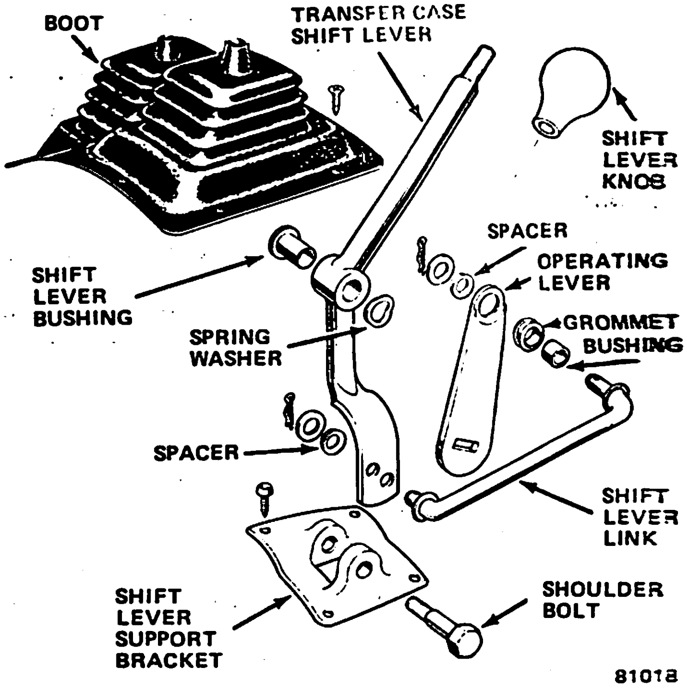

Fig. 2D-1 Transfer Case Shift Linkage—Cherokee-Wagoneer-Truck with Manual Transmission

(9) Install bushing on end of shift lever link that attaches to operating lever.

(10) Connect shift lever link to operating lever and shift lever using spacers and washers removed previously, and new cotter pins.

(11) Lower vehicle.

(12) Install screws that attach shift lever boot to floorpan.

Cherokee-Wagoneer-Truck with Automatic Transmission

Removal

(1) Remove screws attaching pivot bushing retainer assembly to floorpan (fig. 2D-2).

(2) Raise vehicle.

(3) Disconnect lower shift rod at operating lever (fig. 2D-2). Retain flat washer, wave washer and push-on retainer that attach rod end to lever.

(4) Disconnect upper shift rod at shift lever. Retain cotter pin, spacer, and washer that attach rod end to shift lever.

(5) Disconnect lower shift rod at bellcrank lever. Retain cotter pin, spacer and washer that attach lower shift rod trunnion to bellcrank (fig. 2D-2).

(6) Disconnect upper shift rod at bellcrank lever. Retain bushing, cotter pin, spacer, and washer that attach rod end to bellcrank.

(7) Remove bolt, nut and spring washer that attach bellcrank lever (fig. 2D-2). Remove lever and bushing.

(8) Lower vehicle.

(9) Remove shift lever, pivot bushing and bushing retainer as assembly.

(10) Separate pivot bushing retainer assembly and remove pivot bushing and lever.

(11) Clean and inspect shift linkage components. Replace any component that exhibits excessive wear, scoring, distortion, or is cracked, bent or broken.

Installation

(1) Assemble pivot bushing, shift lever and bushing retainer assembly.

(2) Install shift lever assembly in floorpan and install screws that attach pivot bushing retainer to floorpan.

(3) Raise vehicle.

(4) Install bushing in bellcrank lever (if removed) and install lever. Tighten lever attaching bolt and nut securely. Be sure spring washer is positioned on bolt before installing bolt.

(5) Connect upper shift rod to bellcrank lever. Be sure grommet is installed in lever and bushing on rod end before attaching rod to lever.

(6) Connect lower shift rod to operating lever.

(7) Connect lower shift rod trunnion to bellcrank lever.

(8) Connect upper shift rod to transfer case shift lever.

(9) Lower vehicle.

(10) Check linkage operation. If adjustment is necessary, adjust linkage at lower shift rod trunnion. Loosen trunnion jamnuts and position trunnion on rod as required to obtain desired adjustment.

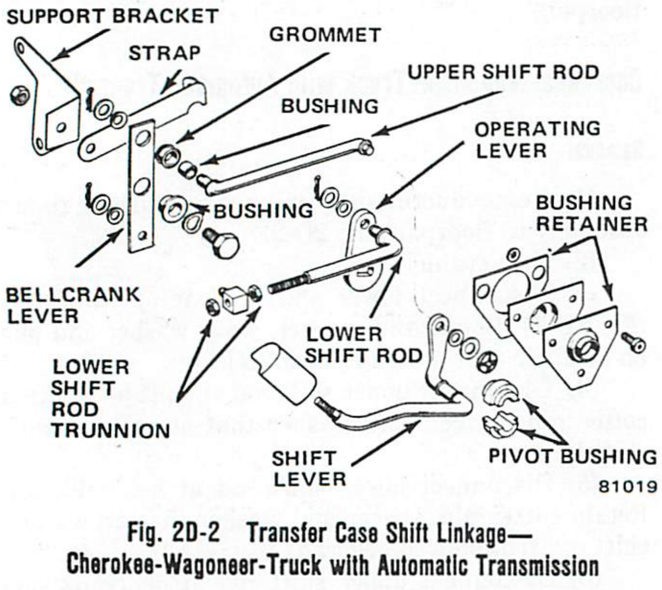

Fig. 2D-2 Transfer Case Shift Linkage—Cherokee-Wagoneer-Truck with Automatic Transmission

CJ and Scrambler Models—With Manual or Automatic Transmission

Removal

(1) Remove screws that attach shift lever boot to floorpan.

(2) Remove shift lever knob and slide boot up and off lever.

(3) Raise vehicle.

(4) Remove shifter shaft retaining nut (fig. 2D-3).

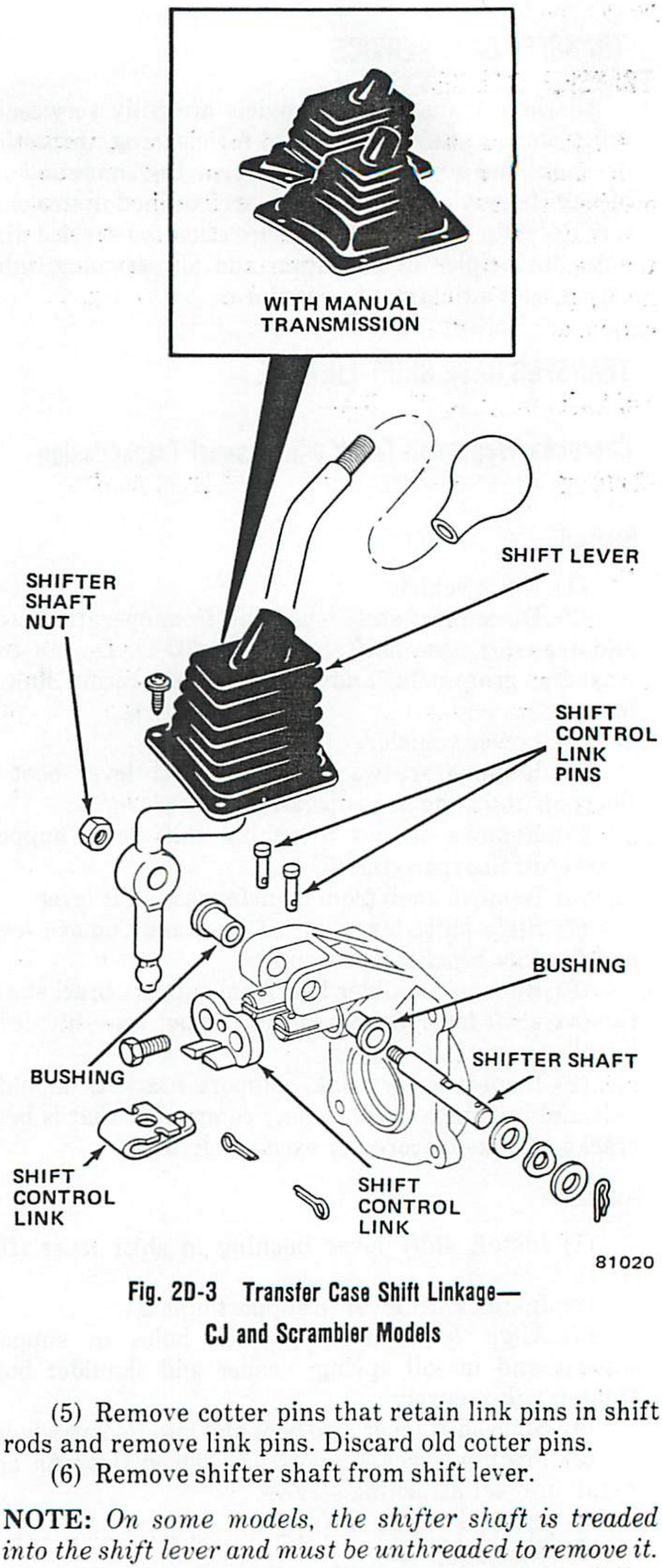

Fig. 2D-3 Transfer Case Shift Linkage—CJ and Scrambler Models

(5) Remove cotter pins that retain link pins in shift rods and remove link pins. Discard old cotter pins.

(6) Remove shifter shaft from shift lever.

NOTE: *On some models, the shifter shaft is treaded into the shift lever and must be unthreaded to remove it. On other models, the shaft is removed simply by sliding it out of the lever and front cover bosses.*

(7) Remove shift lever.

(8) Remove shift and shift control links from shift rods.

(9) Clean and inspect linkage components. Replace any component that is broken, bent, cracked, or excessively worn or scored.

Installation

(1) Install shift and shift control links.

(2) Install shift lever.

(3) Install shifter shaft in front cover bosses and shift lever.

(4) Install and tighten shifter shaft retaining nut.

(5) Install link pins in shift rods. Secure pins with new cotter pins.

(6) Lower vehicle.

(7) Install boot on shift lever.

(8) Install knob on shift lever.

(9) Position boot on floorpan and install boot attaching screws.

TRANSFER CASE REMOVAL

Cherokee-Wagoneer-Truck Models

(1) Raise vehicle.

(2) Drain lubricant from transfer case.

(3) Disconnect speedometer cable and indicator switch wires and disconnect transfer case shift lever link at operating lever.

(4) Place support stand under transmission and remove rear crossmember.

(5) Mark transfer case front and rear output shaft yokes and propeller shafts for assembly alignment reference.

(6) Disconnect front and rear propeller shafts at transfer case yokes. Secure shafts to frame rails with wire.

(7) Disconnect parking brake cable guide from pivot located on right frame rail, if necessary.

(8) Remove bolts attaching exhaust pipe support bracket-to-transfer case, if necessary.

(9) Remove transfer case-to-transmission bolts.

(10) Move transfer case assembly rearward until free of transmission output shaft and remove assembly.

(11) Remove all gasket material from rear of transmission adapter housing.

CJ and Scrambler Models

(1) On models with automatic transmission, remove shift lever knob, trim ring, and boot from transfer case shift lever.

(2) On models with manual transmission, remove shift lever knob, trim ring and boot from transmission and transfer case shift levers.

(3) Remove floor covering, if equipped, and remove transmission access cover from floorpan.

(4) Raise vehicle and drain lubricant from transfer case.

(5) Position support stand under clutch housing to support engine and transmission and remove rear crossmember.

(6) Disconnect front and rear propeller shafts at transfer case. Mark propeller shaft yokes for assembly reference.

(7) Disconnect speedometer cable at transfer case.

(8) If necessary, disconnect parking brake cable at equalizer. Disconnect exhaust pipe support bracket at transfer case, if equipped.

(9) Remove bolts attaching transfer case to transmission and remove transfer case.

TRANSFER CASE INSTALLATION

Cherokee-Wagoneer-Truck Models

(1) Align and install transfer case assembly on transmission. Be sure transfer case input gear splines are aligned with transmission output shaft. Align splines by rotating transfer case rear output shaft yoke, if necessary.

NOTE: *Do not install any transfer case attaching bolts until the transfer case is completely seated against the transmission.*

(2) Align and install transfer case attaching bolts. Tighten bolts to 40 foot-pounds (54 N•m) torque.

(3) Attach exhaust pipe support bracket to transfer case, if removed.

(4) Align and connect propeller shafts.

(5) Connect parking brake cable guide to pivot bracket on frame rail, if removed.

(6) Connect speedometer cable and indicator switch wires and connect transfer case shift lever link to operating lever.

(7) Install rear crossmember and remove transmission support stand.

(8) Fill transfer case with AMC/Jeep Automatic Transmission Fluid or equivalent labeled Dexron II®.

(9) Lower vehicle.

TRANSFER CASE INSTALLATION

CJ and Scrambler Models

(1) Shift transfer case to 4L position.

(2) Rotate transfer case output shaft (by turning yoke) until transmission output shaft gear engages

transfer case input shaft. Move transfer case forward until case seats against transmission.

CAUTION: *Be sure the transfer case is flush against the transmission. Severe damage to the transfer case will result if the attaching bolts are tightened while the transfer case is cocked or in a bind.*

(3) Install transfer case attaching bolts. Tighten bolts to 30 foot-pounds (41 N•m) torque.

(4) Fill transfer case with SAE 85W-90 gear lubricant.

(5) Connect speedometer driven gear to transfer case. Also connect transfer case shift lever and control links to transfer case shift rods.

(6) Connect front and rear propeller shafts to transfer case. Be sure to align shafts-to-yokes using reference marks made during removal. Tighten shaft-to-yoke clamp strap nuts to 16 foot-pounds (21 N•m) torque.

(7) Install rear crossmember and remove support stand from under clutch housing.

(8) Connect parking brake cable to equalizer and connect exhaust pipe support bracket to transfer case if disconnected.

(9) Lower vehicle.

(10) Install transmission access cover plate on floorpan. Install floor covering, if equipped.

(11) Install boots, trim rings, and shift knobs.

MODEL 208 TRANSFER CASE

GENERAL

The model 208 transfer case provides four-wheel high and low ranges, a two-wheel high range and a neutral position. The model 208 is used in Cherokee, Wagoneer and Truck models only. Models equipped with the 208 transfer case are also equipped with manual locking front drive hubs as standard equipment.

The model 208 is a chain drive unit consisting of a two-piece aluminum case containing front and rear output shafts, two drive sprockets, a shift mechanism and a planetary gear assembly. The drive sprockets are connected and operated by the drive chain. The planetary assembly which consists of a four pinion carrier and an annulus gear provide the four-wheel drive low range when engaged. Reduction ratio is 2.61:1 in low range.

Transfer Case Shift Pattern

A floor mounted shift lever is used to select the various operating ranges on all 208 models. The shift lever is located on the floorpan transmission tunnel adjacent to the transmission gearshift lever. Although the transfer case shift pattern is in a straight line for all 208 models, the range positions are different for manual and automatic transmission applications (figs. 2D-4 and 2D-5).

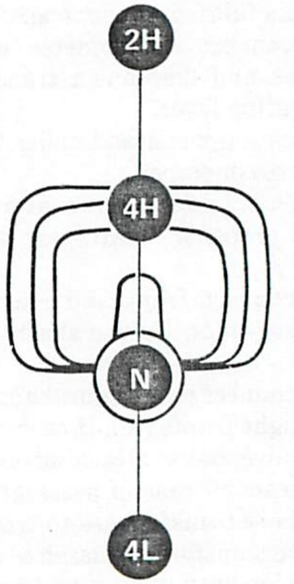

Fig. 2D-4 Model 208 Shift Pattern—Manual Transmission

Four-Wheel Drive Indicator Lamp

An indicator lamp is mounted in the instrument panel to alert the driver whenever the vehicle is being operated in four-wheel high range. The lamp is controlled by an indicator switch in the transfer case (fig. 2D-6). The switch is a ball and plunger unit that is activated by the transfer case range sector when four-wheel high range is selected. The indicator lamp is illuminated in the four-wheel high range position only.

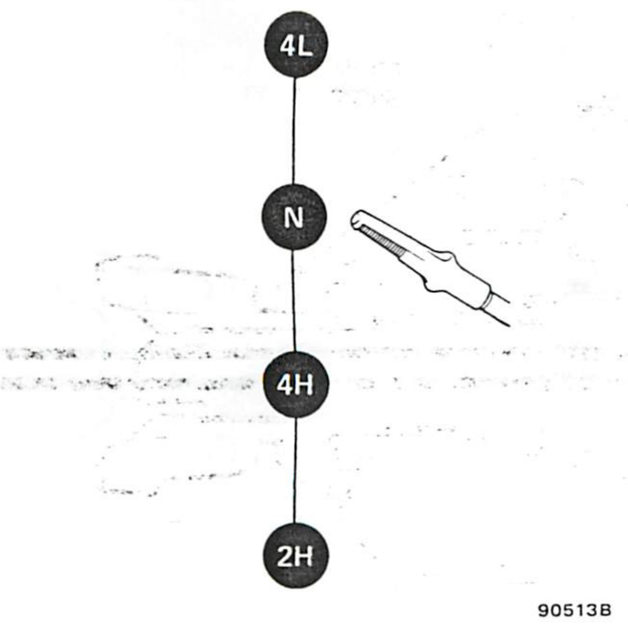

Fig. 2D-5 Model 208 Shift Pattern—Automatic Transmission

IDENTIFICATION

An identification tag is attached to the rear half of the transfer case (fig. 2D-6). This tag provides the transfer case model number, low range reduction ratio, and assembly number. The information on this tag is necessary for servicing information. If the tag is removed or becomes dislodged during service operations, it should be reattached using an adhesive sealant such as Loctite 312, or equivalent.

LUBRICATION

The model 208 transfer case lubricant should be changed at the intervals specified in the Maintenance Schedule. When adding lubricant to or refilling the transfer case after service, use AMC/Jeep Automatic Transmission Fluid or equivalent labeled Dexron II® only. Do not use any type of anti-friction type additives or similar substance. Use the specified grade of motor oil only. Refer to the In-Vehicle Service section for lubricant change procedures and fill level. Model 208 lubricant capacity is 6 pints (3 liters).

POWER FLOW

In all drive range positions input torque is transmitted to the transfer case geartrain through the transfer case input gear (fig. 2D-7).

In 2H range, torque flows from the input gear to the planetary assembly and annulus gear which rotate as a unit. Torque is transferred to the mainshaft through the planetary carrier which is splined to the mainshaft. Torque flow continues through the mainshaft and rear yoke which is splined to the mainshaft, and finally to the rear propeller shaft and axle. In 2H range, the sliding clutch remains in a neutral position and does not lock the drive sprocket to the mainshaft. As a result, torque is not transferred to the driven sprocket.

In 4H range, input torque from the input gear is transmitted through the planetary and annulus gear and through the mainshaft in exactly the same fashion as in 2H range. However, in 4H position, the sliding clutch is shifted forward and into engagement with the mainshaft clutch gear. This locks the drive sprocket to the mainshaft through the sliding clutch. Torque is now transmitted through the drive sprocket to the driven sprocket by the connecting drive chain. Since the front output shaft is splined to the driven sprocket, torque now flows through the front output shaft to the front propeller shaft and axle resulting in high range four-wheel drive.

In 4L range, the path of torque through the transfer case is exactly the same as in 4H range but with one major difference. In 4L range, the annulus gear is shifted forward and into engagement with the lockplate. Since the lockplate is fixed in the case, the annulus gear is held stationary and does not rotate. This causes the planetary pinions to rotate about the annulus gear internal teeth producing a gear reduction ratio of 2.61:1.

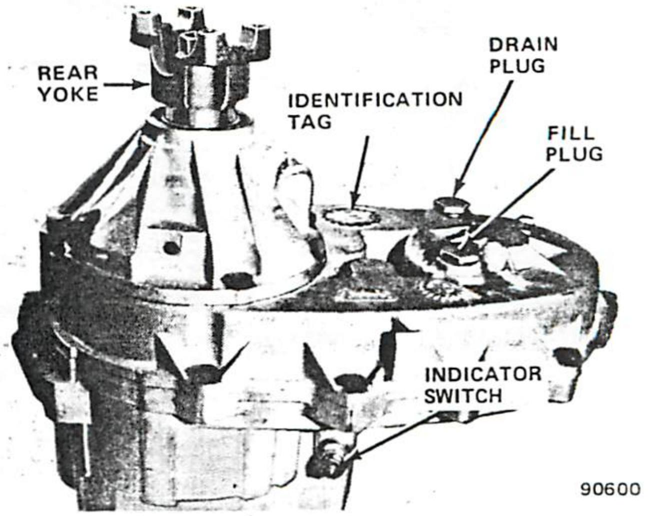

Fig. 2D-6 Model 208 Indicator Switch, Identification Tag and Drain and Fill Plug Location

SERVICE DIAGNOSIS

Before attempting to repair a suspected transfer case malfunction, check all other drive line components beforehand. The actual cause of a problem may be related to such items as the front hubs, axles, propeller shafts, wheels and tires, transmission, or clutch instead. If all other drive line components are in good condition and operating properly, refer to the Service Diagnosis charts for further information.

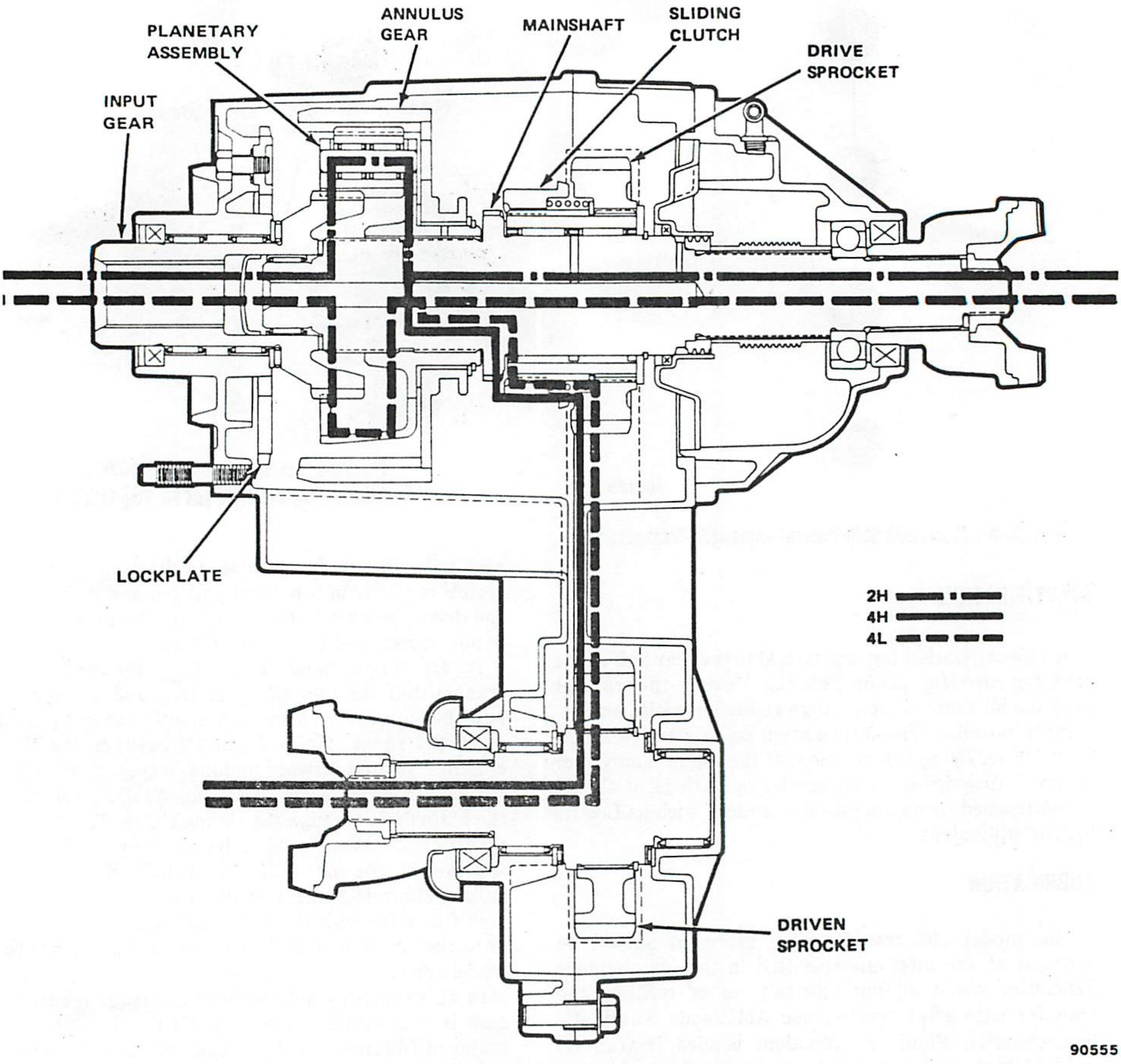

Fig. 2D-7 Power Flow—Model 208 Transfer Case

IN-VEHICLE SERVICE

Changing Lubricant

(1) Raise vehicle.

(2) Position drain pan under transfer case.

(3) Remove drain and fill plugs, and drain lubricant completely.

(4) Install drain plug. Tighten plug to 35 foot-pounds (47 N•m) torque.

(5) Remove drain pan.

(6) Fill transfer case to edge of fill plug opening with AMC/Jeep Automatic Transmission Fluid or equivalent labeled Dexron II®.

(7) Install fill plug. Tighten plug to 35 foot-pounds (47 N•m) torque.

(8) Lower vehicle.

Speedometer Gear, Shaft Seal, Rear Bearing and Retainer, Oil Pump and Pump Seal Replacement

NOTE: *The front and rear yokes, output shaft seals, rear retainer and bearing, oil pump, pump seal, and speedometer drive gear can all be serviced with the transfer case in the vehicle. The following combined procedure outlines removal and installation of these components.*

Removal

(1) Raise vehicle.

(2) Remove fill and drain plugs and drain oil from transfer case.

(3) Mark propeller shaft and transfer case yoke for assembly alignment reference.

(4) Disconnect propeller shaft. Secure shaft to underside of vehicle.

(5) Remove and discard transfer case yoke retaining nut and yoke seal washer. Use Tool J-8614-01 to hold yoke while removing nut.

(6) Remove yoke. If necessary, remove yoke using Tools J-8614-01, -02 and -03.

(7) Remove speedometer driven gear sleeve and driven gear from rear retainer.

(8) Mark rear retainer for assembly alignment reference.

(9) Remove retainer attaching bolts and remove retainer. Tap retainer with rawhide or plastic mallet to remove it.

CAUTION: *Do not attempt to pry the retainer off the rear case. Tap the retainer loose using a rawhide or plastic mallet only.*

(10) Remove speedometer drive gear.

(11) Remove pump housing from retainer and remove seal from housing (fig. 2D-8).

(12) If retainer or bearing are to be replaced, remove bearing retaining snap ring from rear retainer and tap bearing out of retainer using plastic mallet.

(13) Remove oil pump from mainshaft (fig. 2D-5).

(14) Remove output shaft seal if seal is to be replaced.

Installation

(1) Install oil pump on mainshaft.

(2) Install seal in pump housing. Be sure to install seal so lip faces case interior. Lubricate seal lip with petroleum jelly or 10W-30 motor oil before installation.

(3) Install speedometer driven gear.

(4) Install rear output bearing in rear retainer and install snap ring. Be sure shielded side of bearing faces interior of transfer case.

(5) Install pump housing in rear retainer.

(6) Apply Loctite 515, or equivalent sealant, to mating surface of rear retainer.

(7) Align retainer and case reference marks and install retainer on case.

(8) Install and tighten retainer attaching bolts to 23 foot-pounds (31 N•m) torque.

(9) Install output shaft seal.

(10) Install yoke, yoke seal washer and yoke nut. Tighten nut to 120 foot-pounds (163 N•m) torque.

(11) Install speedometer driven gear and sleeve.

(12) Install drain plug. Tighten plug to 35 foot-pounds (47 N•m) torque.

(13) Fill transfer case to edge of fill plug opening with AMC/Jeep Automatic Transmission Fluid or equivalent labeled Dexron II®.

(14) Install fill plug. Tighten plug to 35 foot-pounds (47 N•m) torque.

(15) Connect propeller shaft. Tighten clamp strap bolts to 16 foot-pounds (21 N•m) torque.

(16) Lower vehicle.

DISASSEMBLY

(1) Remove fill and drain plugs (fig. 2D-9).

(2) Remove front and rear yokes. Discard yoke seal washers and yoke nuts.

(3) Turn transfer on end and position front case on wood blocks. Cut "V" case notches in wood blocks to clear mounting studs in front case if necessary.

(4) Remove lock mode indicator switch and washer (fig. 2D-9).

(5) Remove detent bolt, spring and ball (fig. 2D-10).

(6) Mark rear retainer and case for assembly alignment reference.

(7) Remove rear retainer attaching bolts and remove retainer and pump housing as assembly (fig. 2D-8). Tap retainer from case using plastic mallet only. Do not pry.

(8) Remove pump housing from retainer and remove pump seal from housing (fig. 2D-8). Discard seal.

(9) Remove speedometer drive gear from mainshaft.

(10) Remove oil pump from mainshaft. Note position of pump for assembly reference. Side facing case interior has recess in it (fig. 2D-11).

(11) Remove bolts attaching rear case to front case and remove rear case.

CAUTION: *To remove the rear case, insert screwdrivers into the slots cast in the case ends and gently pry upward. Do not attempt to wedge the case halves apart at any point on the mating surfaces.*

(12) Remove front output shaft rear thrust bearing assembly (fig. 2D-12). Note position of bearing and races for assembly reference.

(13) Remove driven sprocket retaining snap ring (fig. 2D-13).

(14) Remove drive sprocket retaining snap ring and remove thrust washer and spacer washer, if equipped (fig. 2D-14).

(15) Remove drive and driven sprockets and drive chain as assembly (fig. 2D-15). Lift evenly on both sprockets to remove assembly.

(16) Remove front output shaft and front thrust bearing assembly (fig. 2D-16).

(17) Remove sprocket carrier stop ring (fig. 2D-17).

(18) Remove clutch spring (fig. 2D-17).

(19) Remove sliding clutch, mode fork, mode fork spring and bracket as assembly (fig. 2D-18). Remove shift rail.

Service Diagnosis

Condition	Possible Cause	Correction
TRANSFER CASE DIFFICULT TO SHIFT OR WILL NOT SHIFT INTO DESIRED RANGE	(1) Vehicle speed too great to permit shifting.	(1) Stop vehicle and shift into desired range. Or reduce speed to 2-3 mph (3-4 km/h) before attempting to shift.
	(2) If vehicle was operated for extended period in 4H mode on dry paved surface, driveline torque load may cause difficult shifting.	(2) Stop vehicle, shift transmission to neutral, shift transfer case to 2H mode and operate vehicle in 2H on dry paved surfaces.
	(3) Transfer case external shift linkage binding.	(3) Lubricate or repair or replace linkage, or tighten loose components as necessary.
	(4) Insufficient or incorrect lubricant.	(4) Drain and refill to edge of fill hole with Jeep, Dextron II Automatic transmission fluid only.
	(5) Internal components binding, worn, or damaged.	(5) Disassemble unit and replace worn or damaged components as necessary.
TRANSFER CASE NOISY IN ALL DRIVE MODES	(1) Insufficient or incorrect lubricant.	(1) Drain and refill to edge of fill hole with Jeep, Dextron II Automatic transmission fluid only. Check for leaks and repair if necessary. Note: If unit is still noisy after drain and refill, disassembly and inspection may be required to locate source of noise.
NOISY IN — OR JUMPS OUT OF FOUR WHEEL DRIVE LOW RANGE	(1) Transfer case not completely engaged in 4L position.	(1) Stop vehicle, shift transfer case in Neutral, then shift back into 4L position.
	(2) Shift linkage loose or binding.	(2) Tighten, lubricate, or repair linkage as necessary.
	(3) Range fork cracked, inserts worn, or fork is binding on shift rail.	(3) Disassemble unit and repair as necessary.
	(4) Annulus gear or lockplate worn or damaged.	(4) Disassemble unit and repair as necessary.

90770A

Service Diagnosis (Continued)

Condition	Possible Cause	Correction
LUBRICANT LEAKING FROM OUTPUT SHAFT SEALS OR FROM VENT	(1) Transfer case overfilled.	(1) Drain to correct level.
	(2) Vent closed or restricted.	(2) Clear or replace vent if necessary.
	(3) Output shaft seals damaged or installed incorrectly.	(3) Replace seals. Be sure seal lip faces interior of case when installed. Also be sure yoke seal surfaces are not scored or nicked. Remove scores, nicks with fine sandpaper or replace yoke(s) if necessary.
ABNORMAL TIRE WEAR	(1) Extended operation on dry hard surface (paved) roads in 4H range.	(1) Operate in 2H on hard surface (paved) roads.

90770B

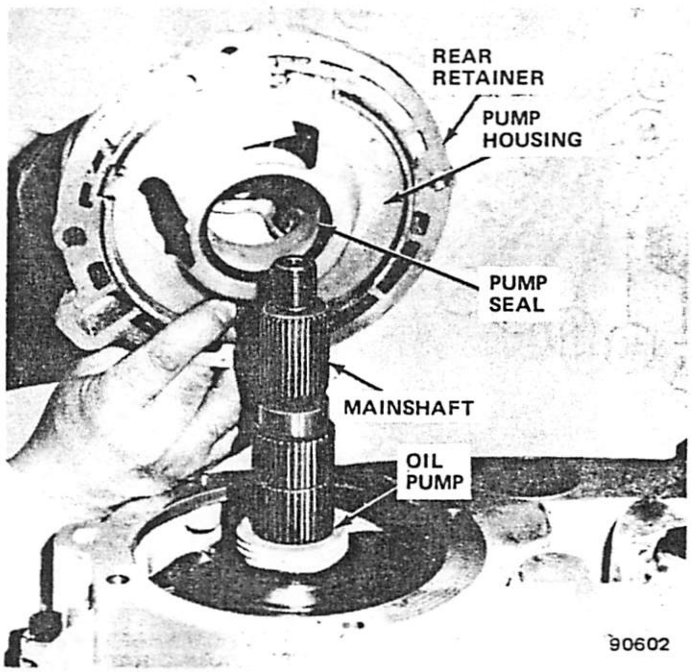

Fig. 2D-8 Rear Retainer Removal/Installation

(20) Remove sprocket carrier, needle bearing upper retainer, thrust washer and mainshaft needle bearings as assembly (fig. 2D-19).

(21) Remove mainshaft (fig. 2D-20).

(22) Remove annulus gear retaining ring and thrust washer (fig. 2D-20).

(23) Remove annulus gear and range fork as assembly. Turn fork counterclockwise to disengage fork lug from range sector and lift assembly out of case (fig. 2D-21).

(24) Remove planetary thrust washer and remove planetary assembly (fig. 2D-22).

(25) Remove mainshaft thrust bearing from input gear (fig. 2D-23) and remove input gear. Lift gear straight up and out of case.

(26) Remove input gear thrust bearing and race (fig. 2D-24). Note position of bearing and race for assembly reference.

(27) Remove range sector operating lever attaching nut and washer. Remove lever and remove sector shaft seal and seal retainer (fig. 2D-9).

(28) Remove range sector.

(29) Inspect lockplate (fig. 2D-24). If lockplate is loose or is worn, broken or cracked, remove lockplate. Refer to replacement procedure in Subassembly Overhaul section.

(30) Remove output shaft seals from front and rear case seal bores.

CLEANING AND INSPECTION

Wash all parts thoroughly in clean solvent. Be sure all old lubricant, metallic particles, dirt, or foreign material are removed from the surfaces of every part. Apply compressed air to each oil feed port and channel in each case half to remove any obstructions or cleaning solvent residue.

Inspect all gear teeth for signs of excessive wear or damage and check all gear splines for burrs, nicks, wear or damage. Remove minor nicks or scratches on oil stone. Replace any part exhibiting excessive wear or damage.

Inspect all snap rings and thrust washers for evidence of excessive wear, distortion, or damage. Replace any of these parts if they exhibit these conditions.

Inspect the two case halves for cracks, porosity, damaged mating surfaces, stripped bolt threads, or distortion. Replace any part that exhibits these conditions.

Inspect the low range lockplate in the front case. If the lockplate teeth or the plate hub is cracked, broken, chipped, or excessively worn, replace the lockplate and the lockplate attaching bolts. Refer to the Low Range Lockplate Replacement procedure in the Subassembly Overhaul section.

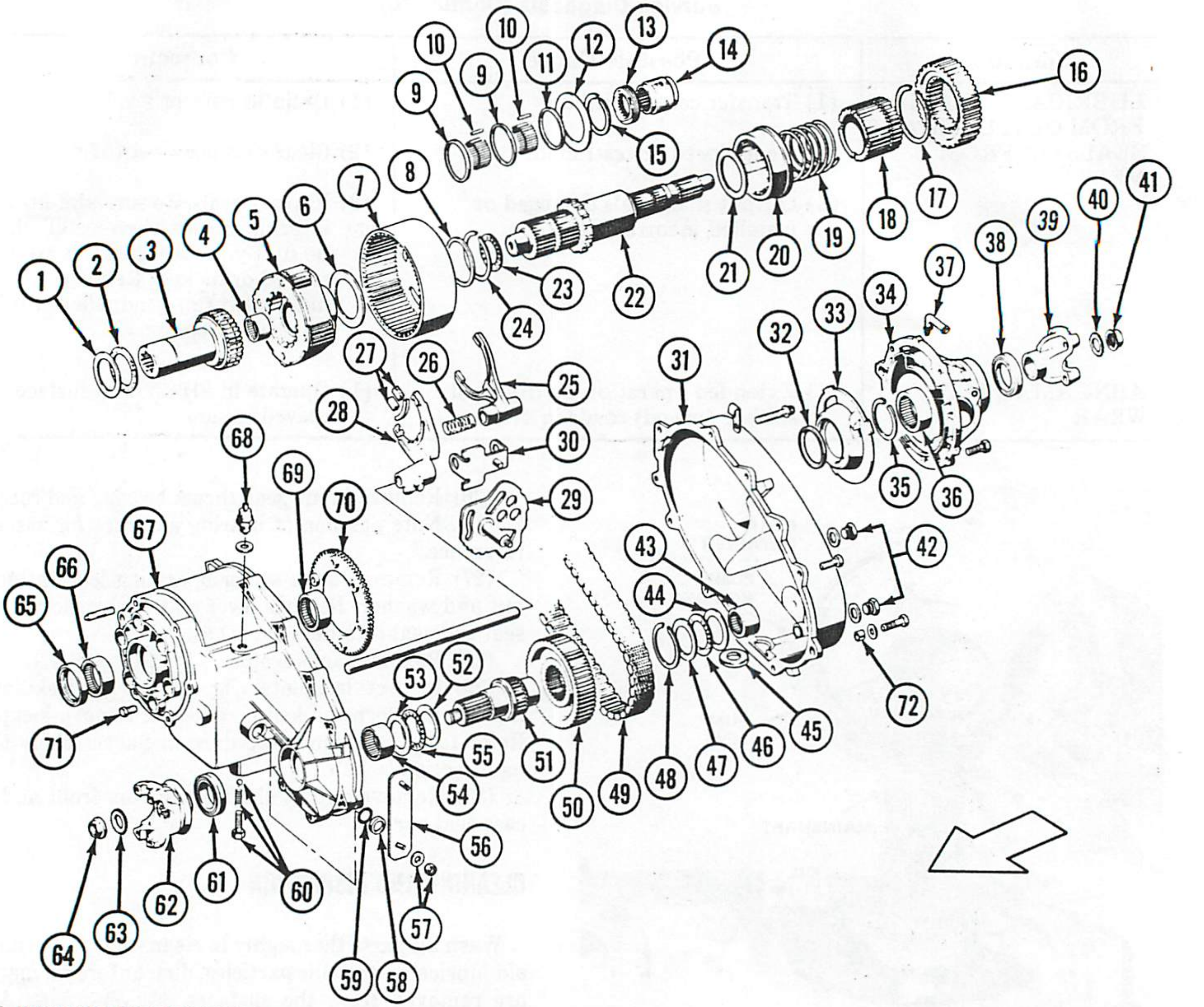

1. INPUT GEAR THRUST WASHER
2. INPUT GEAR THRUST BEARING
3. INPUT GEAR
4. MAINSHAFT PILOT BEARING
5. PLANETARY ASSEMBLY
6. PLANETARY THRUST WASHER
7. ANNULUS GEAR
8. ANNULUS GEAR THRUST WASHER
9. NEEDLE BEARING SPACERS
10. MAINSHAFT NEEDLE BEARINGS (120)
11. NEEDLE BEARING SPACER
12. THRUST WASHER
13. OIL PUMP
14. SPEEDOMETER GEAR
15. DRIVE SPROCKET RETAINING RING
16. DRIVE SPROCKET
17. SPROCKET CARRIER STOP RING
18. SPROCKET CARRIER
19. CLUTCH SPRING
20. SLIDING CLUTCH
21. THRUST WASHER
22. MAINSHAFT
23. MAINSHAFT THRUST BEARING
24. ANNULUS GEAR RETAINING RING
25. MODE FORK
26. MODE FORK SPRING
27. RANGE FORK INSERTS
28. RANGE FORK
29. RANGE SECTOR
30. MODE FORK BRACKET
31. REAR CASE
32. SEAL
33. PUMP HOUSING
34. REAR RETAINER
35. REAR OUTPUT BEARING
36. BEARING SNAP RING
37. VENT TUBE
38. REAR SEAL
39. REAR YOKE
40. YOKE SEAL WASHER
41. YOKE NUT
42. DRAIN AND FILL PLUGS
43. FRONT OUTPUT SHAFT REAR BEARING
44. FRONT OUTPUT SHAFT REAR THRUST BEARING RACE (THICK)
45. CASE MAGNET
46. FRONT OUTPUT SHAFT REAR THRUST BEARING
47. FRONT OUTPUT SHAFT REAR THRUST BEARING RACE (THIN)
48. DRIVEN SPROCKET RETAINING RING
49. DRIVE CHAIN
50. DRIVEN SPROCKET
51. FRONT OUTPUT SHAFT
52. FRONT OUTPUT SHAFT FRONT THRUST BEARING RACE (THIN)
53. FRONT OUTPUT SHAFT FRONT THRUST BEARING RACE (THICK)
54. FRONT OUTPUT SHAFT FRONT BEARING
55. FRONT OUTPUT SHAFT FRONT THRUST BEARING
56. OPERATING LEVER
57. WASHER AND LOCKNUT
58. RANGE SECTOR SHAFT SEAL RETAINER
59. RANGE SECTOR SHAFT SEAL
60. DETENT BALL, SPRING AND RETAINER BOLT
61. FRONT SEAL
62. FRONT YOKE
63. YOKE SEAL WASHER
64. YOKE NUT
65. INPUT GEAR OIL SEAL
66. INPUT GEAR FRONT BEARING
67. FRONT CASE
68. LOCK MODE INDICATOR SWITCH AND WASHER
69. INPUT GEAR REAR BEARING
70. LOCKPLATE
71. LOCKPLATE BOLTS
72. CASE ALIGNMENT DOWELS

Fig. 2D-9 Model 208 Transfer Case

90601

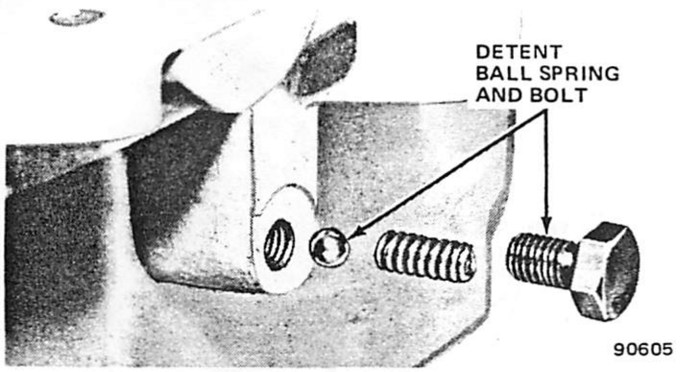

Fig. 2D-10 Detent Ball, Spring and Bolt Removal/Installation

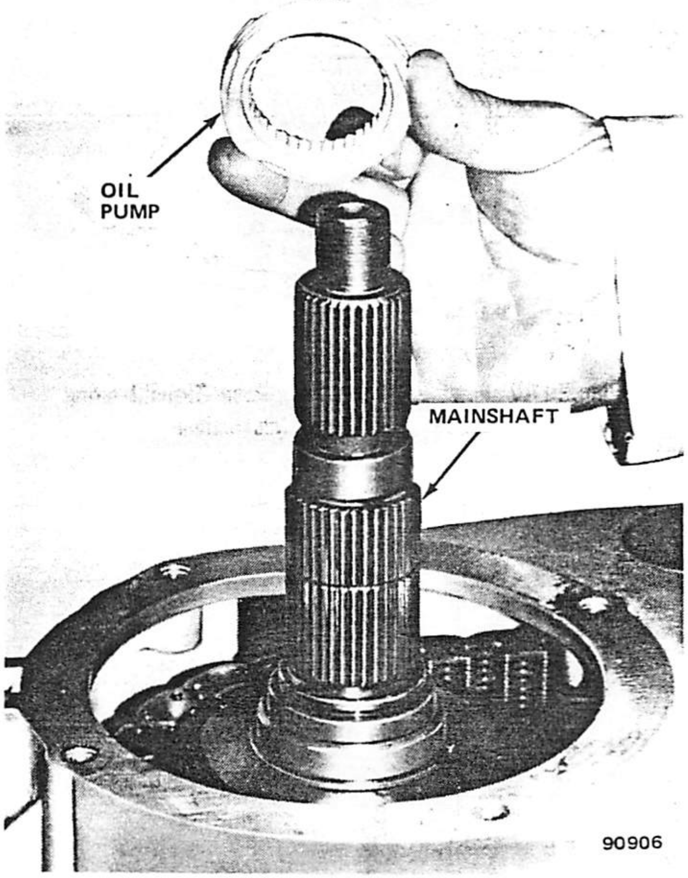

Fig. 2D-11 Oil Pump Removal/Installation

Inspect the condition of all needle, roller, ball and thrust bearings in the front and rear case halves and the input gear. Also check the condition of the bearing bores in both cases and in the input gear, rear output shaft, side gear, and rear retainer. Replace any part that exhibits signs of excessive wear or damage. If the case or input gear bearings require replacement, refer to Bearing Replacement in the Subassembly Overhaul section.

SUBASSEMBLY OVERHAUL

Lockplate Replacement

(1) Remove and discard lockplate attaching bolts.

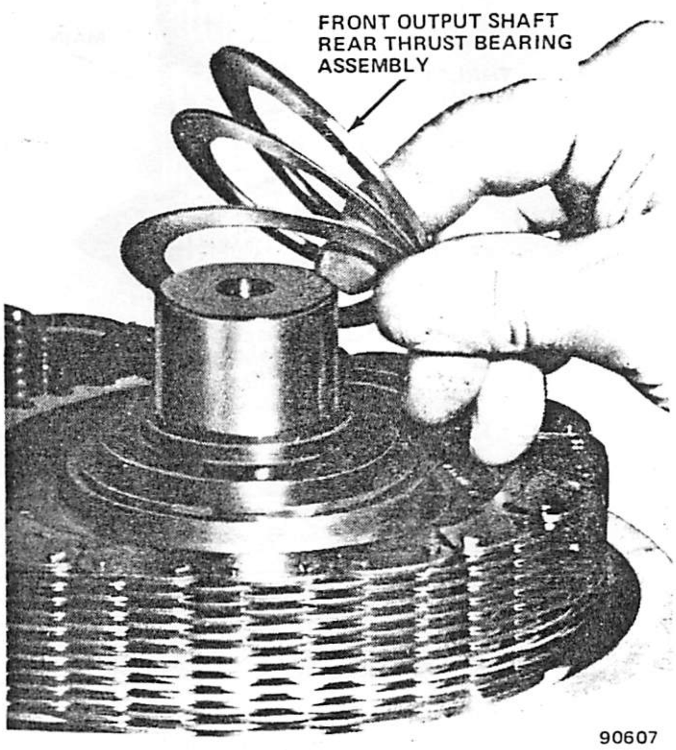

Fig. 2D-12 Front Output Shaft Rear Thrust Bearing Assembly Removal/Installation

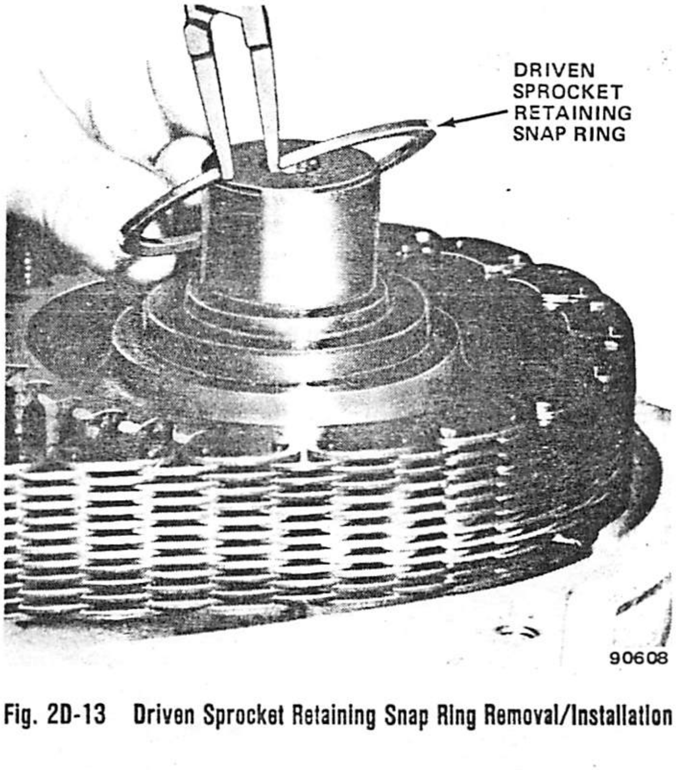

Fig. 2D-13 Driven Sprocket Retaining Snap Ring Removal/Installation

(2) Remove lockplate from case.

(3) Coat case and lockplate surfaces around bolt holes with Loctite 515, or equivalent sealant.

(4) Position new lockplate in case and align bolt holes in lockplate and case.

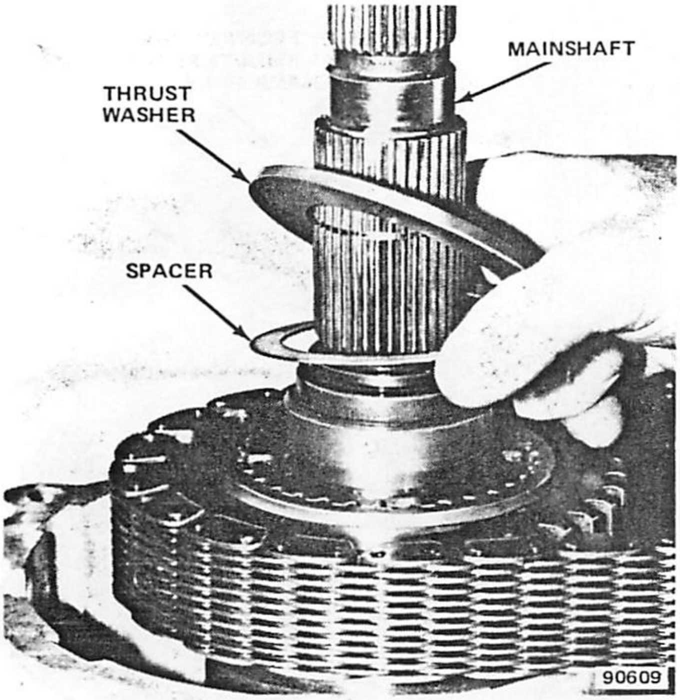

Fig. 2D-14 Drive Sprocket Thrust Washer and Spacer Removal/Installation

(5) Coat new lockplate attaching bolts with Loctite 271, or equivalent adhesive sealant.

(6) Install and tighten lockplate attaching bolts to 30 foot-pounds (41 N•m) torque.

Bearing/Bushing Replacement

CAUTION: *All of the bearings used in the transfer case must be correctly positioned to avoid covering the bearing oil feed holes. After replacing any bearings check the bearing position to be sure the feed hole is not obstructed or blocked by the bearing.*

Rear Output Bearing and Rear Seal Replacement

(1) Remove bearing retaining snap ring and tap bearing out of retainer using mallet or brass drift.

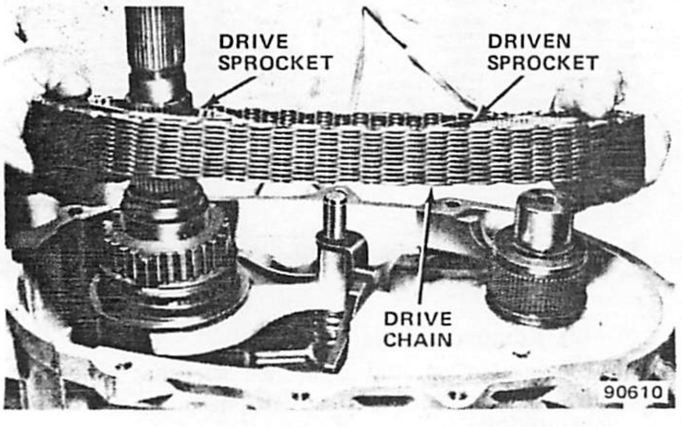

Fig. 2D-15 Sprocket and Chain Removal/Installation

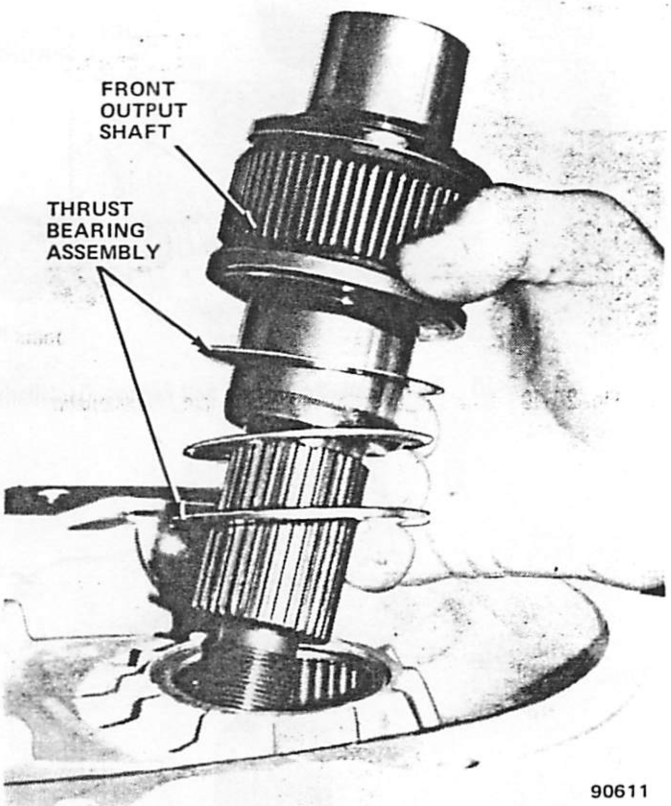

Fig. 2D-16 Front Output Shaft and Front Thrust Bearing Assembly — Removal/Installation

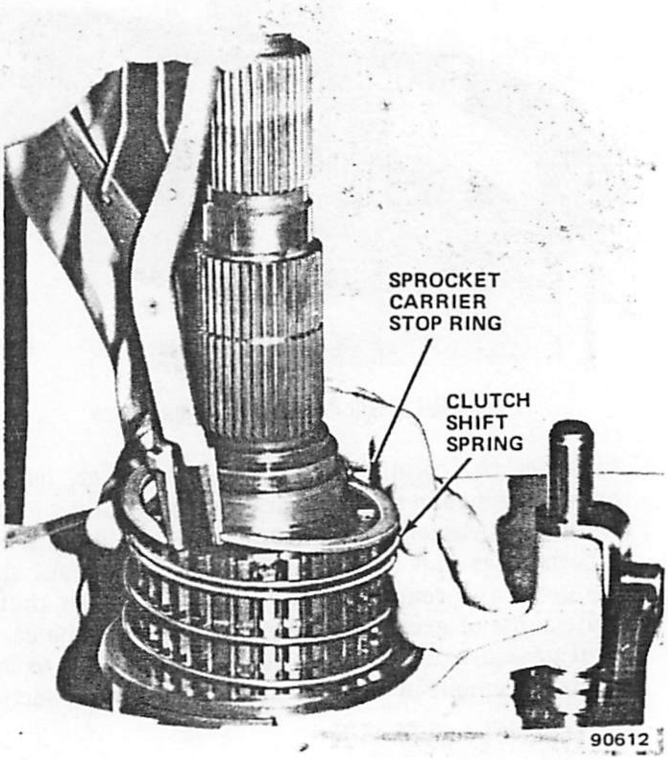

Fig. 2D-17 Sprocket Carrier Stop Ring and Clutch Spring Removal/Installation

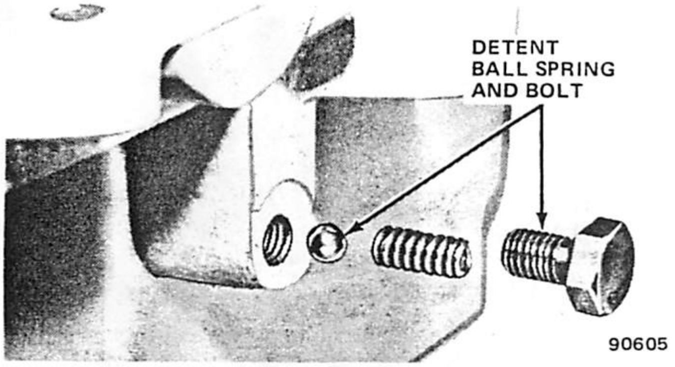

Fig. 2D-10 Detent Ball, Spring and Bolt Removal/Installation

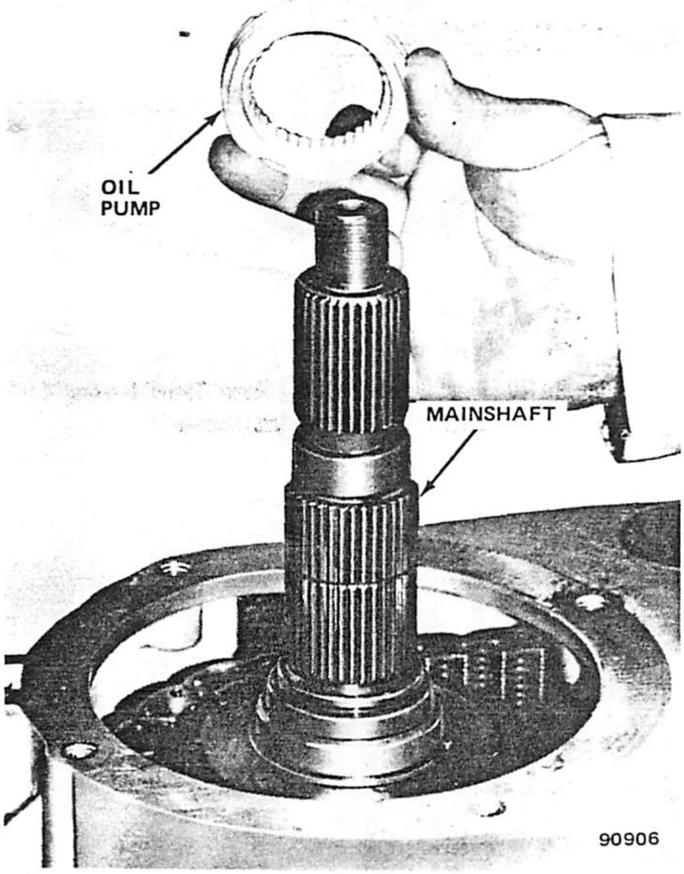

Fig. 2D-11 Oil Pump Removal/Installation

Inspect the condition of all needle, roller, ball and thrust bearings in the front and rear case halves and the input gear. Also check the condition of the bearing bores in both cases and in the input gear, rear output shaft, side gear, and rear retainer. Replace any part that exhibits signs of excessive wear or damage. If the case or input gear bearings require replacement, refer to Bearing Replacement in the Subassembly Overhaul section.

SUBASSEMBLY OVERHAUL

Lockplate Replacement

(1) Remove and discard lockplate attaching bolts.

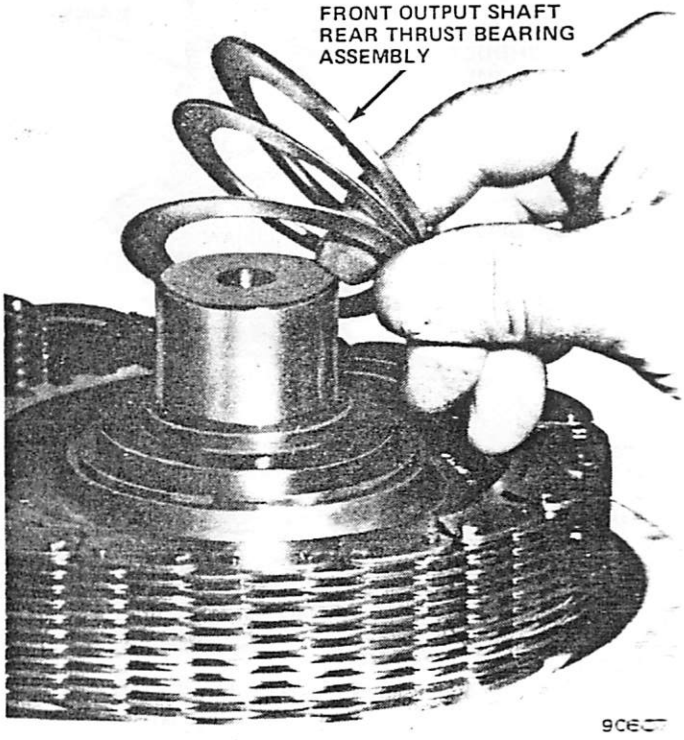

Fig. 2D-12 Front Output Shaft Rear Thrust Bearing Assembly Removal/Installation

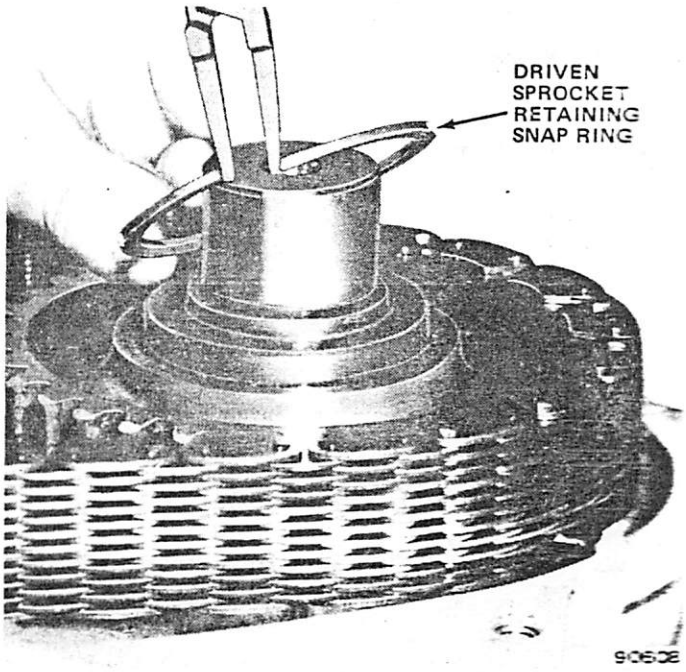

Fig. 2D-13 Driven Sprocket Retaining Snap Ring Removal/Installation

(2) Remove lockplate from case.

(3) Coat case and lockplate surfaces around bolt holes with Loctite 515, or equivalent sealant.

(4) Position new lockplate in case and align bolt holes in lockplate and case.

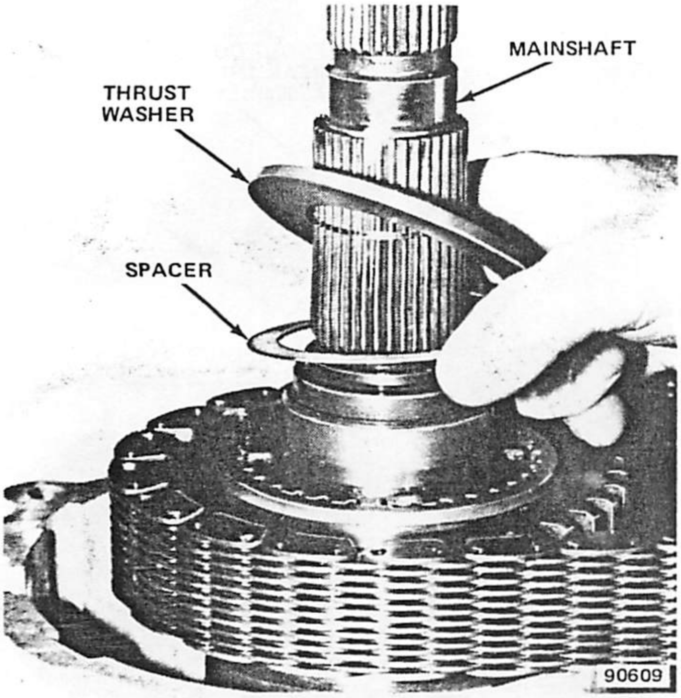

Fig. 2D-14 Drive Sprocket Thrust Washer and Spacer Removal/Installation

(5) Coat new lockplate attaching bolts with Loctite 271, or equivalent adhesive sealant.

(6) Install and tighten lockplate attaching bolts to 30 foot-pounds (41 N•m) torque.

Bearing/Bushing Replacement

CAUTION: *All of the bearings used in the transfer case must be correctly positioned to avoid covering the bearing oil feed holes. After replacing any bearings check the bearing position to be sure the feed hole is not obstructed or blocked by the bearing.*

Rear Output Bearing and Rear Seal Replacement

(1) Remove bearing retaining snap ring and tap bearing out of retainer using mallet or brass drift.

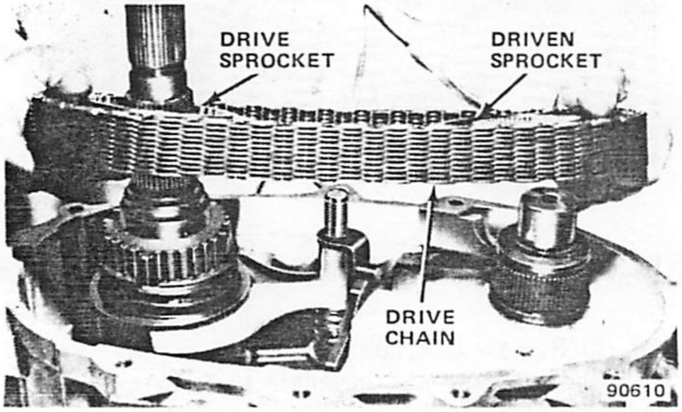

Fig. 2D-15 Sprocket and Chain Removal/Installation

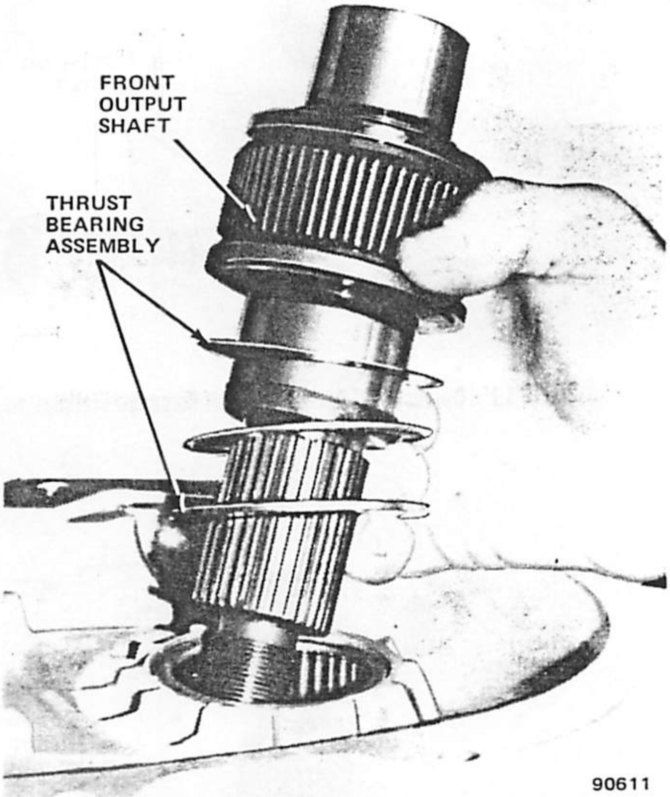

Fig. 2D-16 Front Output Shaft and Front Thrust Bearing Assembly— Removal/Installation

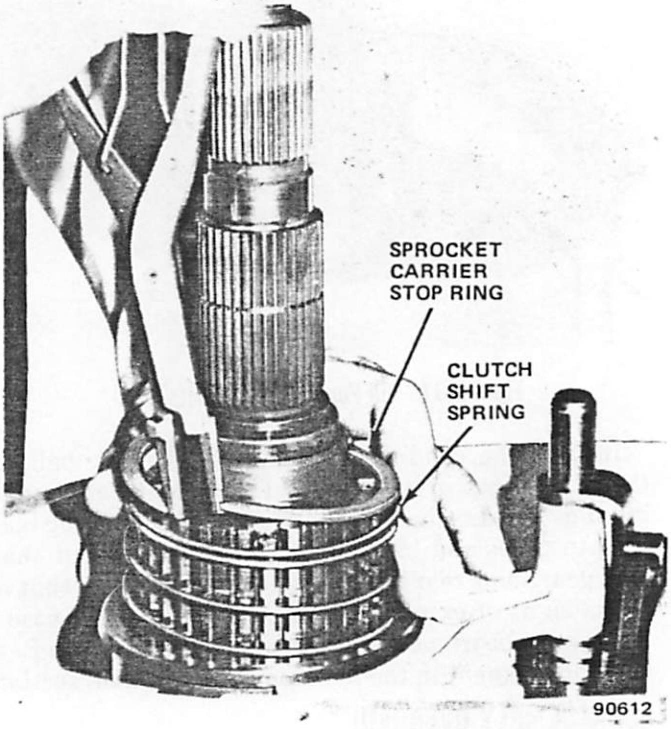

Fig. 2D-17 Sprocket Carrier Stop Ring and Clutch Spring Removal/Installation

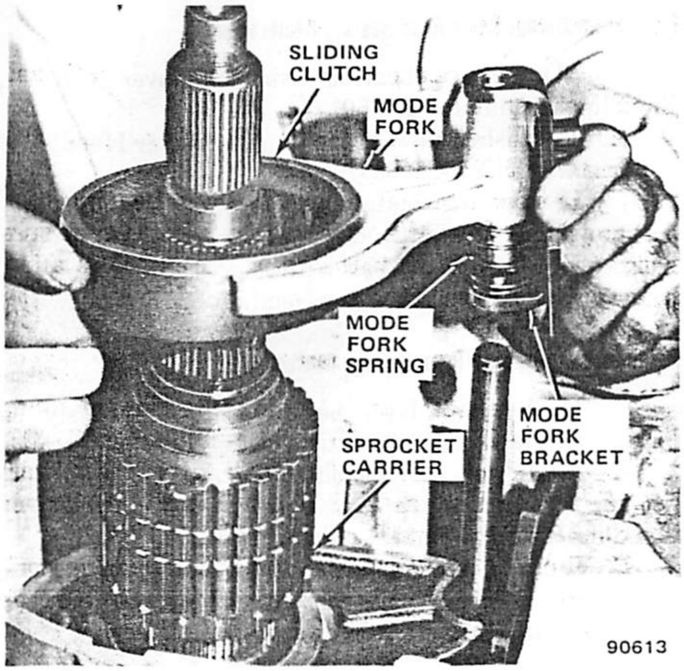

Fig. 2D-18 Mode Fork, Spring, Bracket and Sliding Clutch Removal/Installation

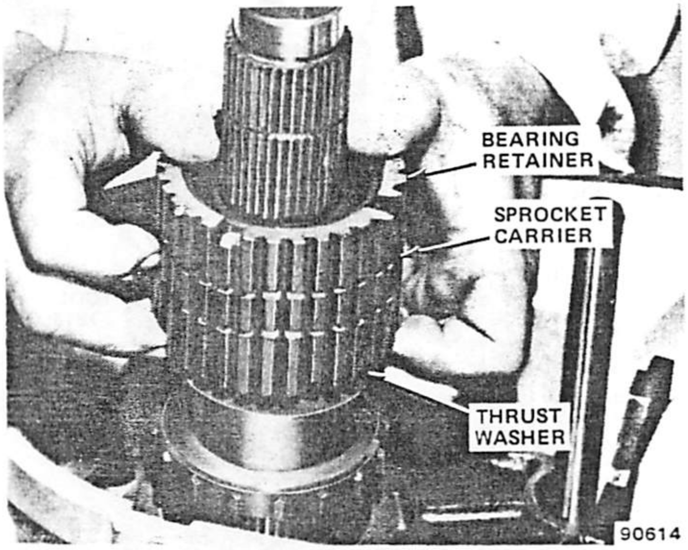

Fig. 2D-19 Sprocket Carrier, Bearing Retainers, Thrust Washer and Needle Bearing Removal

(2) Remove rear seal using screwdriver or brass drift.

(3) Install new bearing using Tool J-7818 (fig. 2D-25). Be sure shielded side of bearing faces interior of case.

(4) Install bearing retaining snap ring.

(5) Install new rear seal using Tools J-8092 and J-29162 (fig. 2D-26).

Front Output Shaft Front Bearing Replacement

(1) Remove bearing using Tools J-8092 and J-29168 (fig. 2D-27).

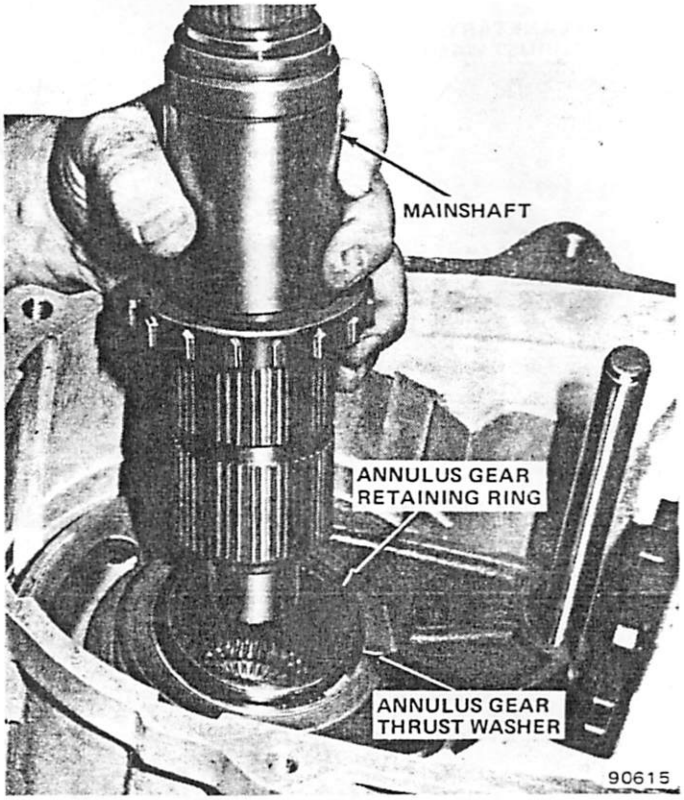

Fig. 2D-20 Mainshaft Removal/Installation

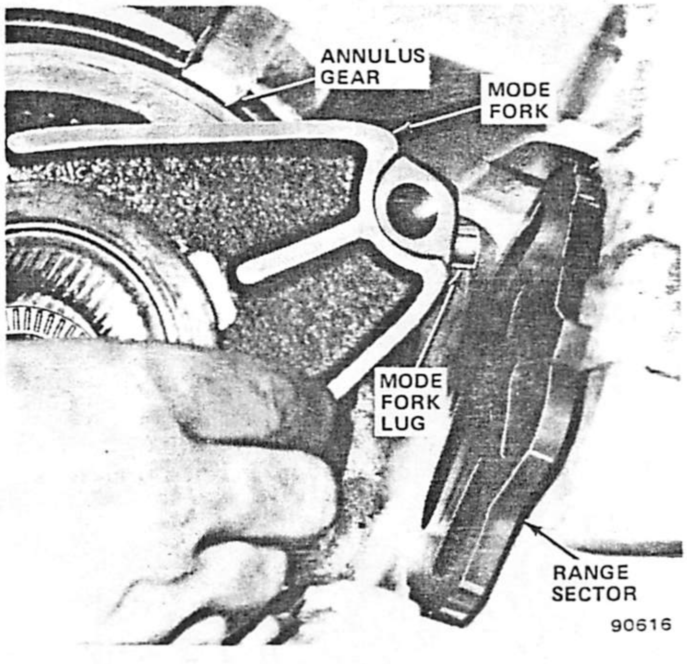

Fig. 2D-21 Annulus Gear and Mode Fork Removal/Installation

(2) Install new bearing using Tools J-8092 and J-29167 (fig. 2D-28).

(3) Remove installer tools and check bearing position to be sure oil feed hole is not covered.

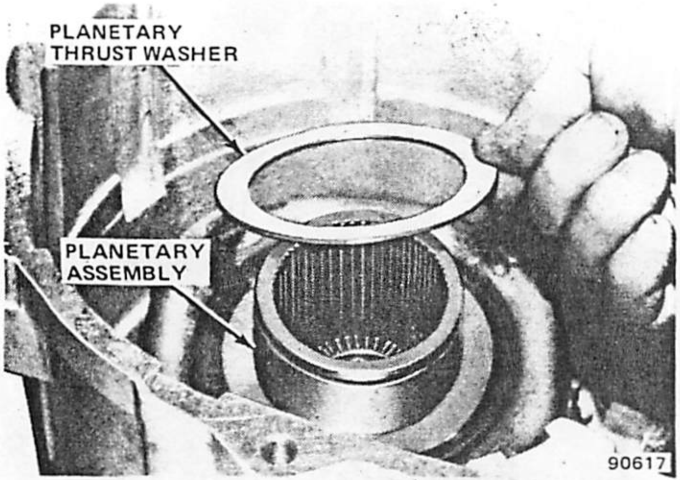

Fig. 2D-22 Planetary Thrust Washer and Planetary Assembly

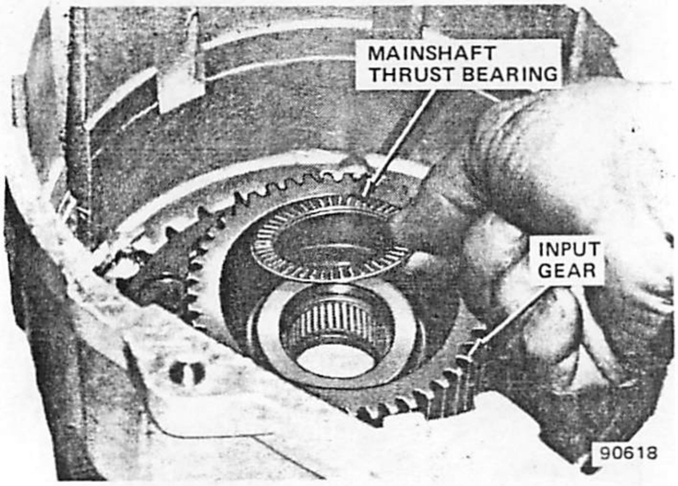

Fig. 2D-23 Mainshaft Thrust Bearing and Input Gear

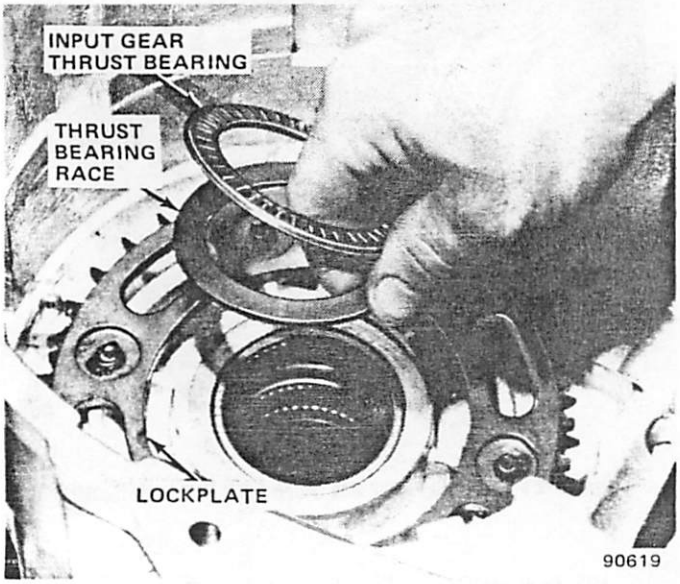

Fig. 2D-24 Input Gear Thrust Bearing and Race Removal—Installation

Front Output Shaft Rear Bearing Replacement

(1) Remove bearing using Remover J-26941 and Slide Hammer J-2619-01 (fig. 2D-29).

(2) Install new bearing using Driver Handle J-8092 and Installer J-29163 (fig. 2D-30).

(3) Remove installer tools and check bearing position to be sure oil feed hole is not covered. Also be sure bearing is seated flush with edge of case bore to allow room for thrust bearing assembly.

Input Gear Front/Rear Bearing Replacement

(1) Remove both bearings simultaneously using Driver Handle J-8092 and Remover J-29170 (fig. 2D-31).

(2) Install new bearings one at a time. Install rear bearing first; then install front bearing. Use Driver Handle J-8092 and Installer J-29169 (fig. 2D-32).

(3) Remove installer tools and check bearing position to be sure oil feed holes are not covered. Also be sure bearings are flush with case bore surfaces.

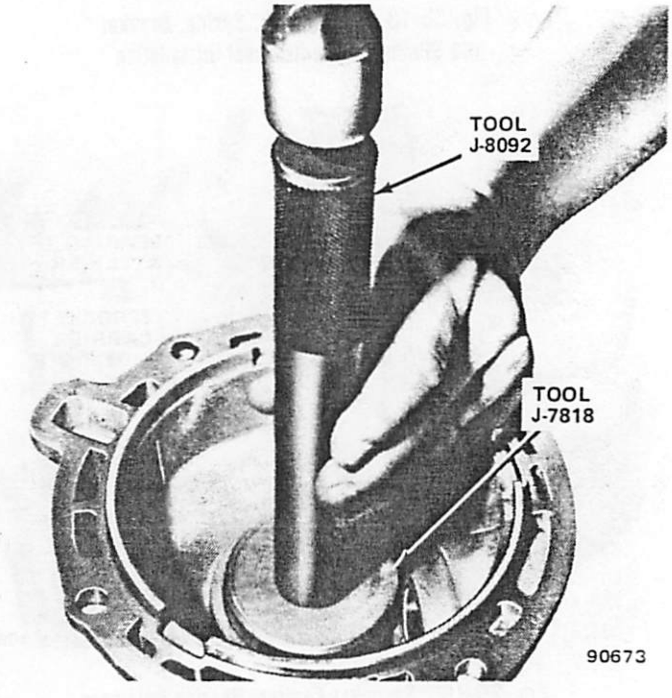

Fig. 2D-25 Rear Output Bearing Installation

Mainshaft Pilot Bearing Replacement

(1) If bearing cannot be removed by hand, remove it using Slide Hammer J-2619-01 and Remover J-29369-1 or similar internal type blind hole bearing puller (fig. 2D-33).

(2) If necessary, install new bearing using Driver Handle J-8092 and Installer J-29174 (fig. 2D-34).

(3) If bearing was seated using installer tools, check bearing position to be sure hole feed hole is not covered. Also be sure bearing is seated flush with edge of bearing bore.

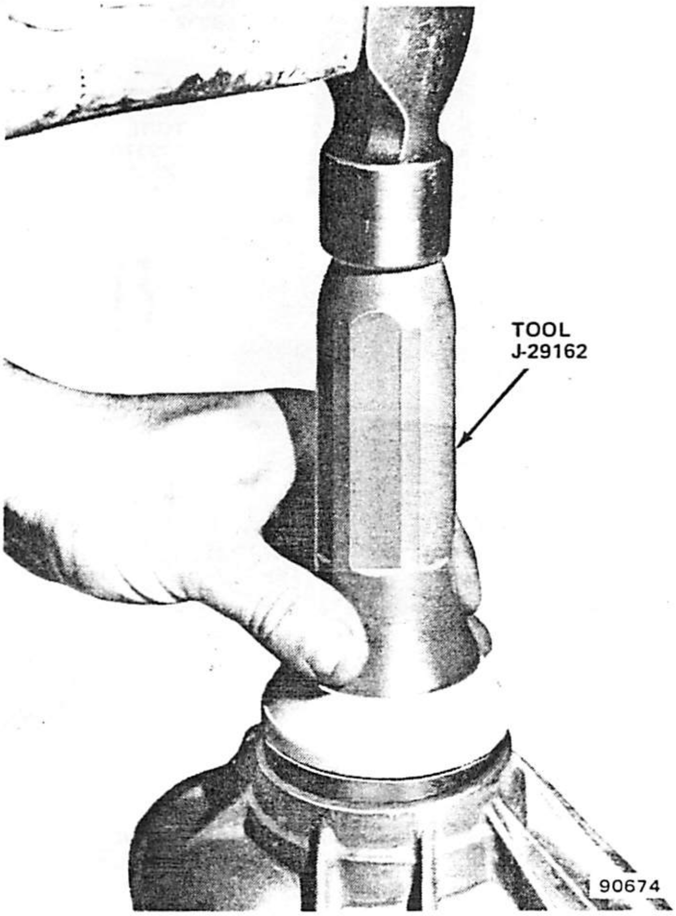

Fig. 2D-26 Rear Seal Installation

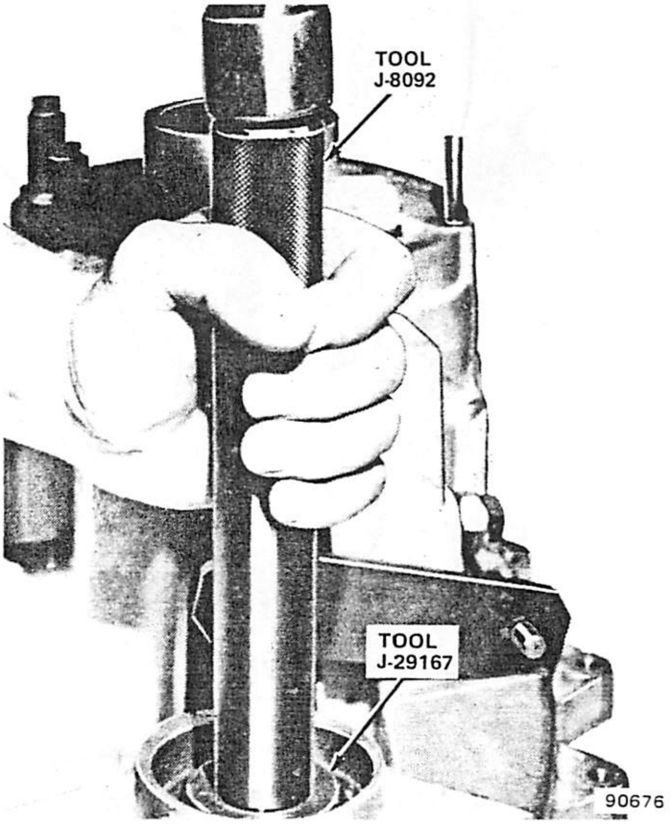

Fig. 2D-28 Front Output Shaft Front Bearing Installation

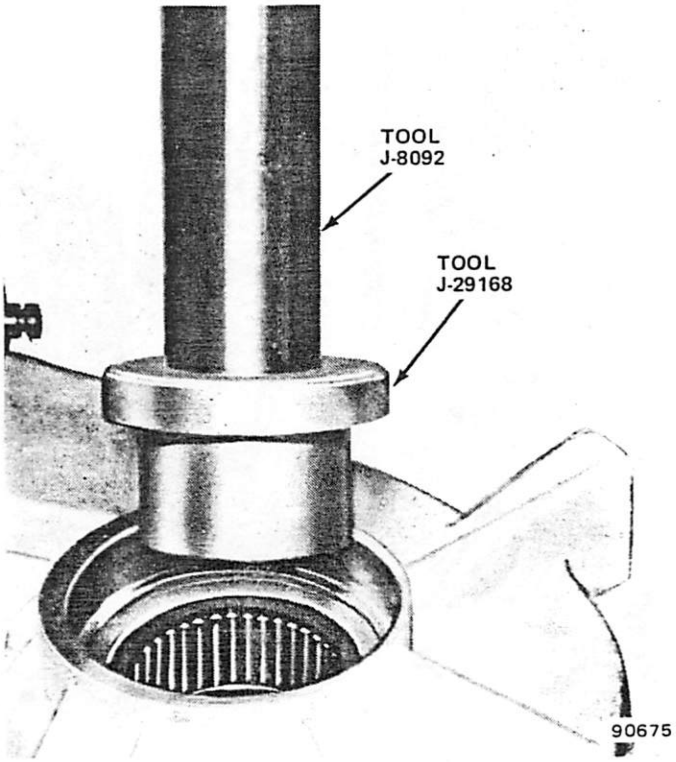

Fig. 2D-27 Front Output Shaft Front Bearing Removal

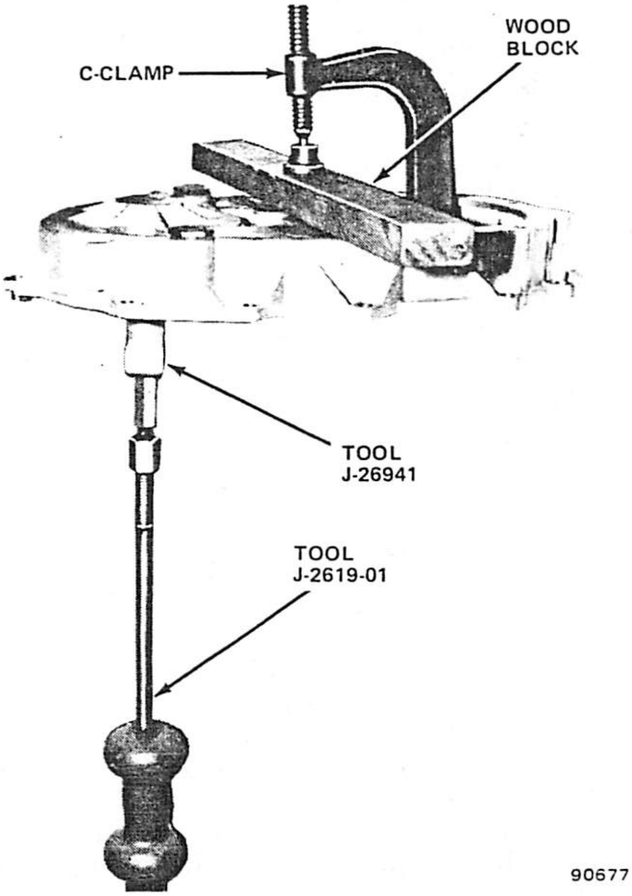

Fig. 2D-29 Front Output Shaft Rear Bearing Removal

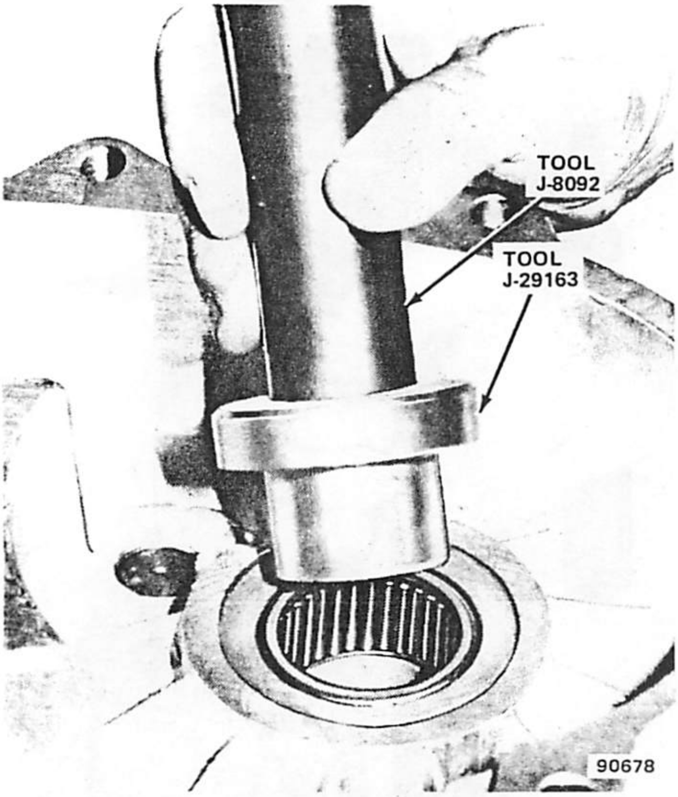

Fig. 2D-30 Front Output Shaft Rear Bearing Installation

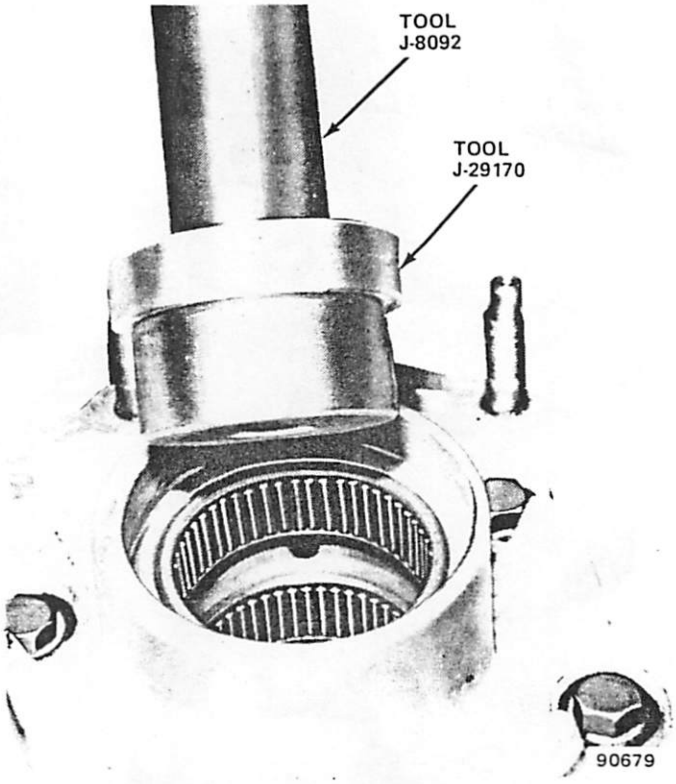

Fig. 2D-31 Input Gear Bearing Removal

Annulus Gear Bushing Replacement

(1) Remove bushing using Driver Handle J-8092 and Remover/Installer Tool J-29185 (fig. 2D-35).

(2) Install new bushing using Tools J-8092 and J-29185-2 (fig. 2D-36).

(3) Remove any chips generated by bushing removal/installation.

ASSEMBLY

NOTE: *During assembly, lubricate all components with AMC/Jeep Automatic Transmission Fluid or equivalent labeled Dexron II® or petroleum jelly where indicated only. Do not use any other type of lubricants.*

(1) Install input gear race and thrust bearing in front case (fig. 2D-24).

(2) Install input gear.

(3) Install mainshaft thrust bearing in input gear (fig. 2D-37).

(4) Install range sector shaft seal and seal retainer (fig. 2D-9).

(5) Install range sector.

(6) Install operating lever on range sector shaft. Install and tighten shaft washer and locknut to 18 foot-pounds (24 N•m) torque.

(7) Install planetary assembly over input gear (fig. 2D-37). Be sure planetary is fully seated and meshed with gear.

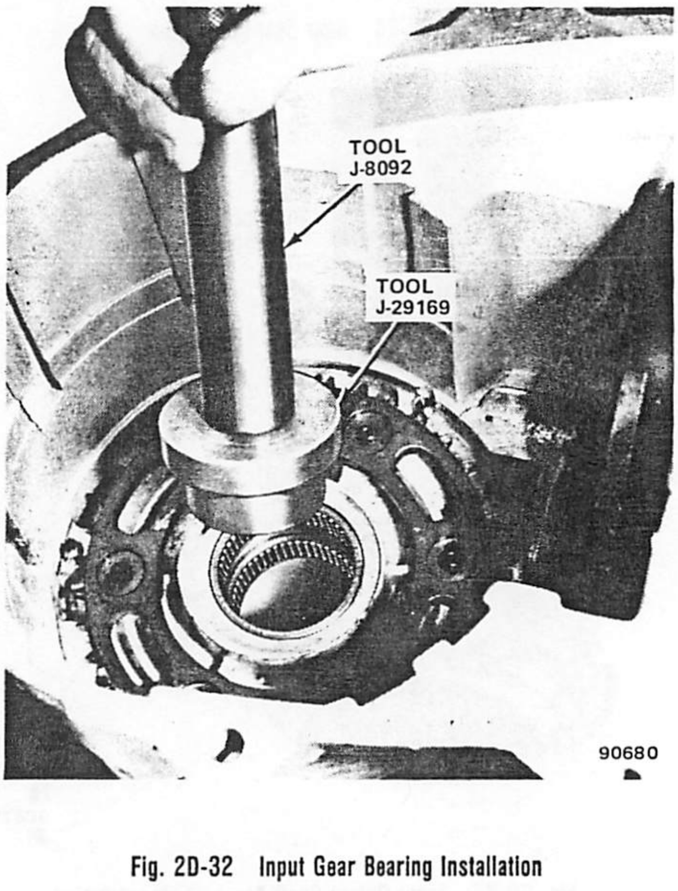

Fig. 2D-32 Input Gear Bearing Installation

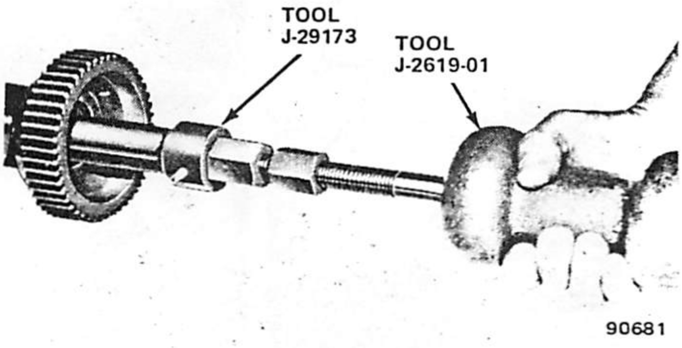

Fig. 2D-33 Mainshaft Pilot Bearing Removal

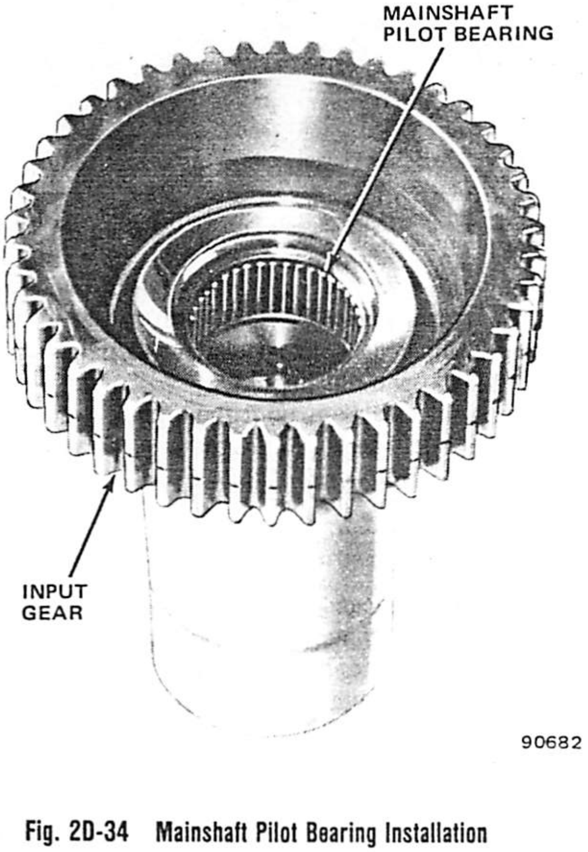

Fig. 2D-34 Mainshaft Pilot Bearing Installation

(8) Install planetary thrust washer on planetary hub (fig. 2D-22).

(9) Install inserts in range fork, if removed.

(10) Engage range fork in annulus gear and install annulus gear over planetary assembly (fig. 2D-38).

NOTE: *Be sure the range fork lug is fully inserted in the range sector slot (fig. 2D-21).*

(11) Install annulus gear thrust washer and retaining snap ring (fig. 2D-20).

(12) Align shift rail bores in case and range fork and install shift rail (2D-38).

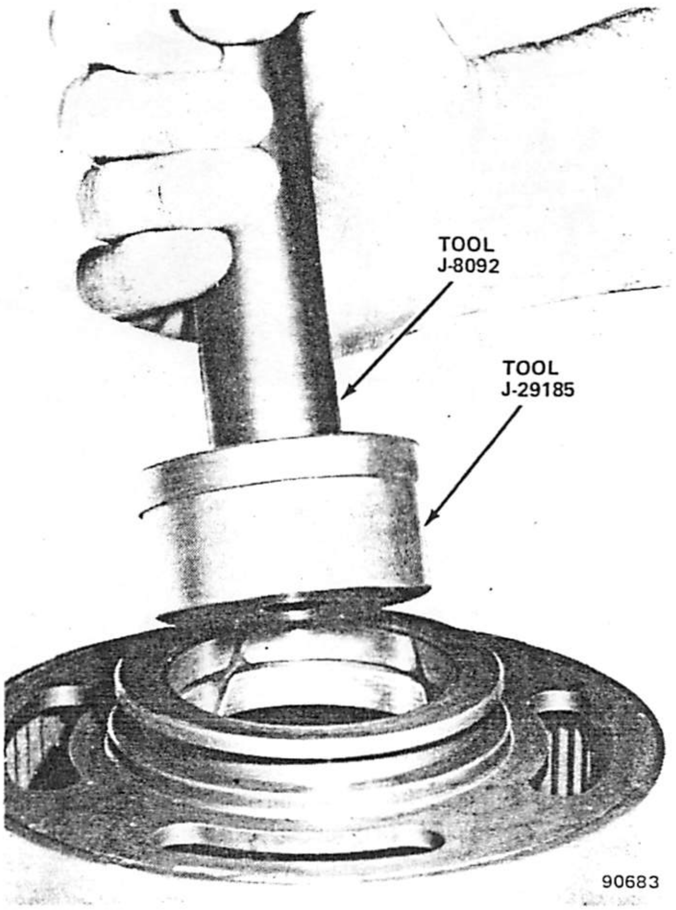

Fig. 2D-35 Annulus Gear Bushing Removal

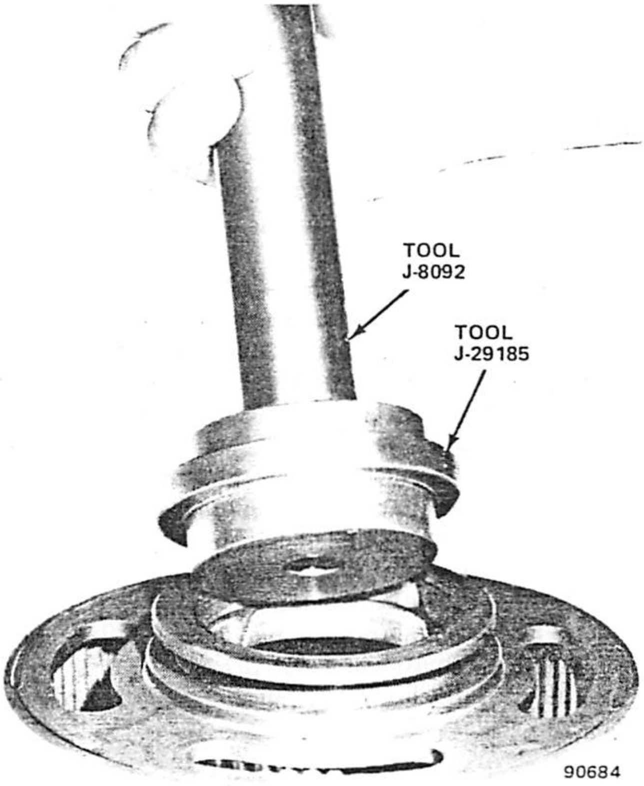

Fig. 2D-36 Annulus Gear Bushing Installation

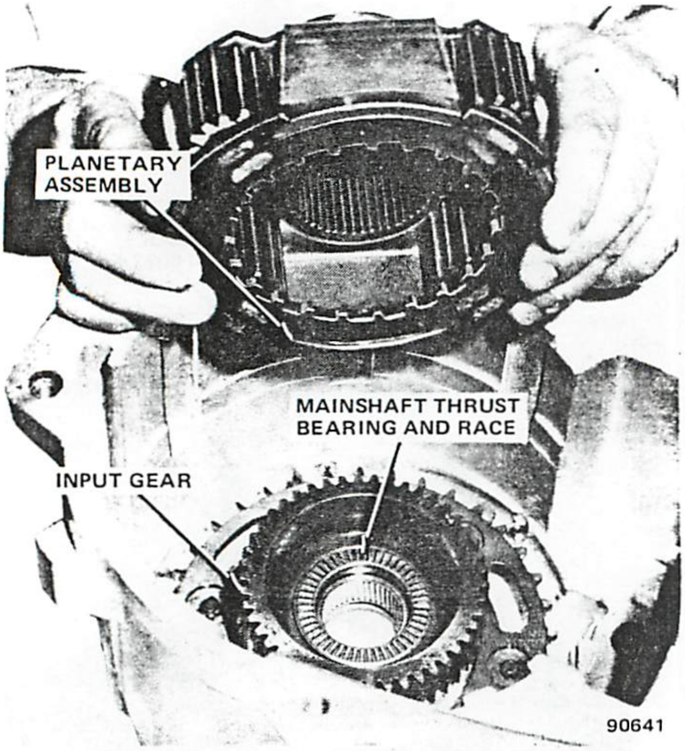

Fig. 2D-37 **Input Gear, Mainshaft Thrust Bearing and Planetary Installation**

CAUTION: *The shift rail bore in the case must be completely dry and not contain any oil. A small amount of oil may prevent the rail from seating completely and also prevent front case installation.*

(13) Install mainshaft (fig. 2D-20). Be sure mainshaft thrust bearing is properly seated in input gear before installing mainshaft.

(14) Coat sprocket carrier bore with liberal quantity of petroleum jelly and position bearing retainer at center of carrier bore.

(15) Coat mainshaft needle bearings with petroleum jelly and install 60 needle bearings in each end of sprocket carrier bore. Total of 120 bearings are used.

(16) Install bearing retainer in each end of sprocket carrier bore and position thrust washer on bottom of carrier (fig. 2D-39).

(17) Align assembled carrier and needle bearings with mainshaft and install assembly on mainshaft (fig. 2D-16). Take care to avoid displacing needle bearings during installation.

(18) Assemble mode fork, fork spring and bracket. Engage fork in sliding clutch and install assembly on shift rail and mainshaft (fig. 2D-18).

(19) Install clutch spring and stop ring on sprocket carrier (fig. 2D-17).

NOTE: *If the sprocket carrier has two ring grooves, install the stop ring in the upper groove only.*

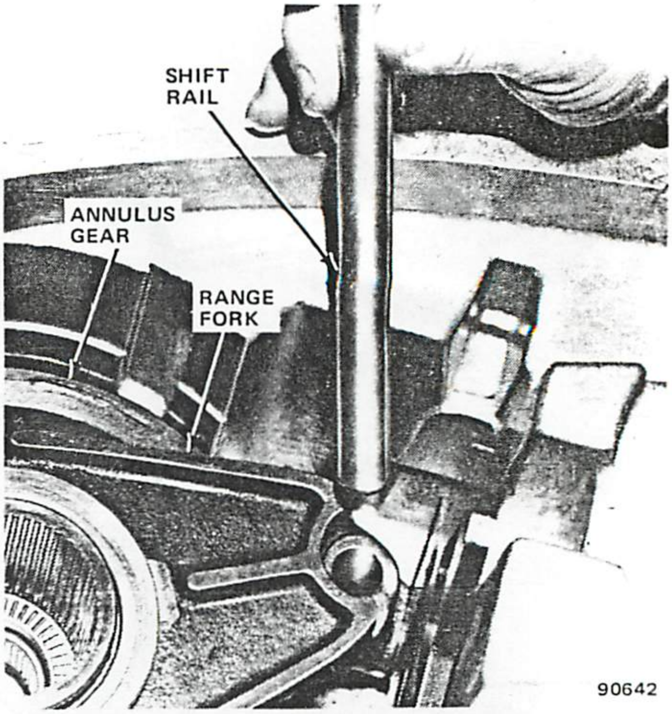

Fig. 2D-38 **Annulus Gear and Shift Rail Installation**

(20) Install front output shaft front thrust bearing assembly in front case (fig. 2D-16). Correct installation sequence is thick race-thrust bearing-thin race.

(21) Install front output shaft.

(22) Install sprockets and drive chain as assembly. Position sprockets in chain, align sprockets with shafts and install assembly (fig. 2D-15).

NOTE: *Be sure the drive sprocket is installed with the recessed side of the sprocket facing the case interior.*

(23) Install spacer and thrust washer on drive sprocket (fig. 2D-14) and install sprocket retaining snap ring.

(24) Install driven sprocket retaining ring (fig. 2D-13).

(25) Install front output shaft rear thrust bearing assembly on front output shaft (fig. 2D-12). Correct installation sequence is thin race-thrust bearing-thick race.

(26) Install oil pump on mainshaft. Be sure recessed side of pump faces downward toward case interior.

(27) Install speedometer drive gear on mainshaft.

(28) Install magnet in front case, if removed.

(29) Apply Loctite 515, or equivalent sealant, to mating surface of front case and install rear case on front case.

CAUTION: *Be sure front output shaft rear thrust bearing assembly is seated in the rear case.*

(30) Align case bolt holes and alignment dowels and install bolts. Tighten bolts alternately and evenly to 23 foot-pounds (31 N•m) torque.

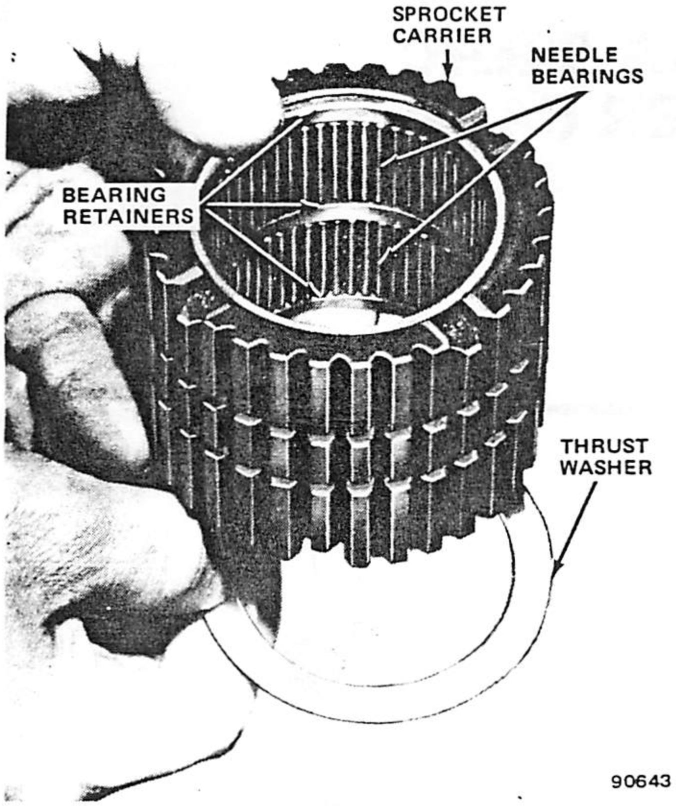

Fig. 2D-39 Assembling Sprocket Carrier Components

NOTE: *Be sure to install flat washers on the two bolts installed at the opposite ends of the case.*

(31) Install rear output bearing in rear retainer and install snap ring.

(32) Install seal in pump housing. Apply petroleum jelly to pump housing tabs and install housing in rear retainer.

(33) Apply Loctite 515, or equivalent sealant, to mating surface of rear retainer.

(34) Align rear retainer and case index marks and install retainer. Install and tighten retainer bolts to 23 foot-pounds (23 N•m) torque.

(35) Install oil seal in rear retainer bore. Coat seal lip with petroleum jelly before installation.

(36) Install washer and indicator switch. Tighten. switch to 18 foot-pounds (24 N•m) torque.

(37) Apply small quantity of Loctite 515, or equivalent sealant, to detent retainer bolt and install detent ball, spring and bolt (fig. 2D-10). Tighten bolt to 23 foot-pounds (31 N•m) torque.

(38) Install drain plug and gasket. Tighten plug to 35 foot-pounds (47 N•m) torque.

(39) Install oil seal in front case output shaft bore.

(40) Install front and rear yokes. Be sure to install yoke, with collar on it, on front output shaft.

(41) Install yoke seal washers and yoke nuts. Tighten nuts to 120 foot-pounds (163 N•m) torque.

(42) Pour 6 pints (3 liters) of 10W-30 motor oil into transfer case through fill plug hole and install and tighten fill plug to 18 foot-pounds (24 N•m) torque.

SPECIFICATIONS

Specifications—Model 208 Transfer Case

Transfer Case Type	4-position, dual range, part-time 4-wheel drive unit with integral low range
Torque Transmittal Mode	Dual sprockets with interconnecting drive chain
Low Range Reduction Ratio and Mode	2.6:1 through annulus gear and planetary carrier assembly
Drive positions and shift controls	2H, 4H, 4L, Neutral – Ranges selected via floor-mounted shift lever. (4-wheel drive ranges are undifferentiated)
Case Configuration	Two-piece aluminum casting with removable rear retainer
Lubricant Capacity and Type	6 pints (3 liters) Jeep, Dextron II Automatic transmission fluid only.

90621

Torque Specifications

Service Set-To Torques should be used when assembling components. Service In-Use Recheck Torques should be used for checking a pre-tightened item.

	USA (ft-lbs)		Metric (N·m)	
	Service Set-To Torque	Service In-Use Recheck Torque	Service Set-To Torque	Service In-Use Recheck Torque
Detent Retainer Bolt	23	20-25	31	27-34
Drain and Fill Plugs	35	30-40	47	40-54
Front/Rear Yoke Nuts	120	90-130	163	122-176
Indicator Switch	18	15-20	24	20-34
Operating Lever Locknut	18	14-20	24	19-27
Rear Case-to-Front Case Bolts (All)	23	20-25	31	27-34
Rear Retainer Bolts	23	20-25	31	27-34

All torque values given in foot-pounds and newton-meters with dry fits unless otherwise specified.

90620

MODEL 219 QUADRA-TRAC TRANSFER CASE

GENERAL

The model 219 Quadra-Trac transfer case provides four-wheel high and low ranges, a neutral position and a four-wheel high-lock position for use when the vehicle is immobile due to excessive wheel spin.

Model 219 provides full-time, fully differentiated operation in 4H range only. The 4L and Lock ranges provide undifferentiated drive modes. In 4H range, differentiation is accomplished through a torque biasing viscous coupling and an open differential connected to the coupling. Two drive sprockets and an interconnecting drive chain are used to distribute input torque.

Drive range selection is by means of a floor mounted shift lever. A straight line shift pattern is used for all models equipped with the 219 (fig. 2D-40).

Four-Wheel High-Lock Position Indicator Lamp

An indicator lamp is mounted in the instrument panel to alert the driver whenever the vehicle is being operated in four-wheel high-lock range. The lamp is controlled by an indicator switch in the transfer case. The switch is a ball and plunger unit that is activated by the transfer case range sector when four-wheel high-lock range is selected. The indicator lamp is illuminated in the four-wheel high-lock position only.

IDENTIFICATION

An identification tag is attached to the rear half of the transfer case (fig. 2D-3). This tag provides the transfer case model number, low range reduction ratio, and assembly number. The information on this tag is necessary for servicing information. If the tag is removed or becomes dislodged during service operations, it should be reattached using an adhesive sealant such as Loctite 312, or equivalent.

LUBRICATION

Fig. 2D-40 Model 219 Shift Pattern

The model 219 transfer case lubricant should be changed at the intervals specified in the Maintenance Schedule. When adding lubricant to or refilling the transfer case after service, use AMC/Jeep Automatic Transmission Fluid or equivalent labeled Dexron II®. Do not use any type of anti-friction type additives or similar substance. Use the specified grade of motor oil only. Refer to the In-Vehicle Service section for lubricant change procedures and fill level. Model 219 lubricant capacity is 4 pints (2 liters).

POWER FLOW

Four-Wheel High (4H) Range

In all drive range positions, input torque is transmitted to the transfer case geartrain through the input gear (fig. 2D-41).

In four high range (4H), torque flows from the input gear to the planetary assembly and annulus gear which rotate as a unit. Torque is transferred to the mainshaft through the planetary carrier which is splined to the mainshaft (fig. 2D-41).

In 4H range, the clutch sleeve is not engaged with the mainshaft. Torque flows through the mainshaft to the differential pinions which are splined to the mainshaft.

Torque is then transmitted through the pinions to the gear teeth on the side gear and rear output shaft. Since the side gear is splined to the drive sprocket, torque is also transmitted to the front output shaft through the driven sprocket which is connected to the drive sprocket by the drive chain (fig. 2D-41).

Viscous Coupling and Differential Operation in 4H Range

The differential assembly consists of the side gear, rear output shaft and the viscous coupling and differential pinion gear assembly. The differential operates in the same fashion as an open-type axle differential. In straight-ahead driving, the differential and coupling rotate as a *unit*. *On* turns, the differential allows the front and rear axles to operate at their own speeds. This occurs because the pinions are then free to rotate around the side gear and rear output shaft gear teeth at differing speeds.

The viscous coupling functions as a torque biasing slip limiting unit. If consists of an enclosed housing containing two sets of fixed clutch plates and a special silicone fluid. The differential pinion gears are located in the open center section of the coupling.

The coupling is connected to the front propeller shaft through the side gear and drive sprocket which operates the driven sprocket and front output shaft via the drive chain. The rear propeller shaft is connected to the coupling through the rear output shaft side gear teeth which are meshed with the differential pinions. In normal operation, the coupling is not active. Front/rear axle speed differences that produce drive line torque loads are dissipated by the differential. However, when extreme speed variations between axles occur, such as

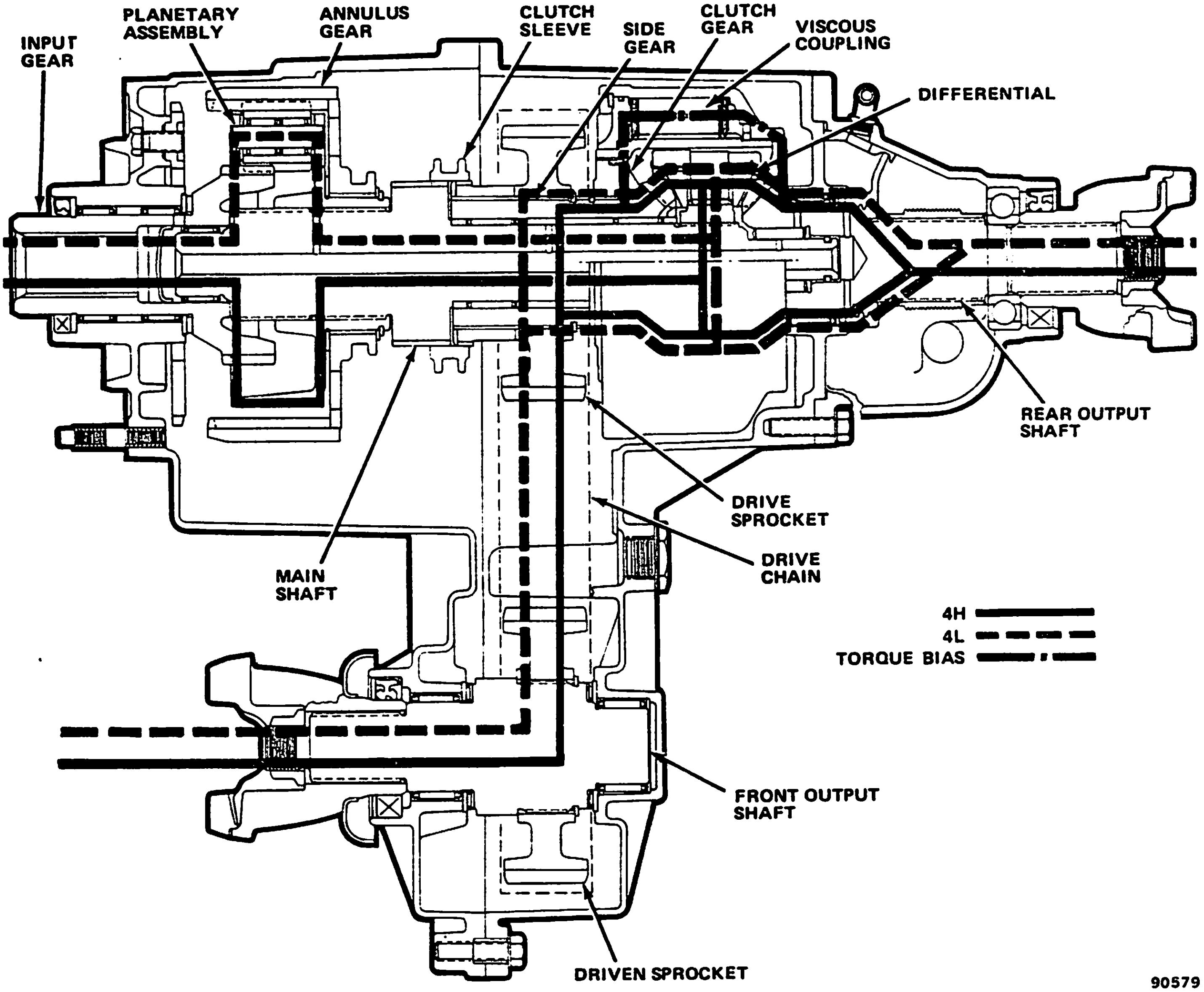

Fig. 2D-41 Power Flow—Model 219 Quadra-Trac Transfer Case when one wheel or set of wheels spin on an ice covered surface, the coupling acts to transfer torque to the axle wheels having greater traction.

The special silicone fluid in the enclosed portion of the coupling is quite viscous and does not thin out when heated or subjected to high shear forces. In operation, when one axle overspeeds due to wheel slip, the input to the coupling causes the coupling rotational speed to increase also. However, as coupling speed increases, the fixed clutch plates in the coupling are forced to rotate (shear) through the silicone fluid at higher speeds also. As the fluid is forced between the plates, it is displaced and expands, creating shear friction and increased resistance to further increases in input speed. This resistance to rotating speed increases in direct proportion to the increase in input speed from the front or rear axle through the propeller shaft.

In situations where the coupling becomes operational, the coupling does not lock the axles together to produce undifferentiated four-wheel drive. The coupling merely limits (controls) the amount of slippage while delivering maximum torque to the axle having greater traction.

NOTE: *The coupling and pinion assembly is not a serviceable component. It is a sealed unit and is not refillable. If the coupling or pinions become damaged in some way, it must be replaced as an assembly only. Do not attempt to disassemble the unit.*

The coupling does not provide limited slip operation in 4L or Lock positions. In these ranges the coupling is locked to the shafts and torque flow bypasses the differential. Transfer case operation is undifferentiated in these drive modes.

Four-Wheel Low (4L) Range

In 4L range, the torque path through the transfer case is similar to 4H range (fig. 2D-41). However, in 4L the clutch sleeve is engaged with the mainshaft and the annulus gear is shifted forward into engagement with the fixed (stationary) lockplate. This prevents the annulus gear from rotating. The planetary pinions are forced to rotate around the annulus internal teeth producing a gear reduction ratio of 2.61:1. Because the mainshaft, side gear and sprocket and coupling are all locked together in 4L position, the differential is bypassed resulting in undifferentiated four-wheel drive.

Lock Position

In Lock position, the clutch sleeve is moved forward into engagement with the mainshaft. Since the sleeve is still engaged with the side gear clutch, it locks the side gear and drive sprocket, which is splined to the side gear, to the mainshaft as well. Torque now flows through the side gear directly to the viscous coupling housing through the clutch gear which is splined to the side gear. Because the rear output shaft is also splined to the coupling housing, the differential is bypassed resulting in an undifferentiated four-wheel drive-lock mode. This range should be used only when the vehicle is immobile due to excessive wheel spin.

SERVICE DIAGNOSIS

Before attempting to repair a suspected transfer case malfunction, check all other drive line components beforehand. The actual cause of a problem may be related to such items as the front hubs, axles, propeller shafts, wheels and tires, transmission, or clutch instead. If all other drive line components are in good condition and operating properly, refer to the service diagnosis charts for further information.

Torque Bias Check—Model 219

A method for checking viscous coupling operation, both in and out of the vehicle, has been developed. The procedure involves measuring the torque required to rotate the coupling when it is in a static (at rest) condition. Whenever diagnosis indicates a possible coupling malfunction, check coupling torque bias (static rotating torque) as outlined in the following two procedures.

In-Vehicle Torque Bias Check

(1) Place vehicle on level surface. Stop engine.

(2) Place transmission shift lever in NEUTRAL and transfer case shift lever in 4-HIGH position.

(3) Raise one front wheel off floor.

(4) Remove hub cap from wheel just raised.

(5) Assemble socket and torque wrench and install on any lug nut of wheel just raised.

(6) Rotate wheel using torque wrench and measure torque required to rotate wheel.

(7) If coupling is operating properly, it should require minimum of 45 foot-pounds (61 N•m) to rotate wheel.

(8) If rotating torque is at or above specified limit, remove wrench, install hub cap and lower wheel.

(9) If rotating torque is below specified limit, remove wrench, install hub cap, lower wheel and refer to On-Bench Torque Bias Check.

On-Bench Torque Bias Check

NOTE: *The following procedure can be used as both a diagnostic procedure and a means of verifying coupling operation prior to reassembly and installation of the transfer case.*

(1) Remove and disassemble transfer case.

(2) Install clutch gear on side gear (fig. 2D-42).

(3) Install assembled clutch gear and side gear in viscous coupling.

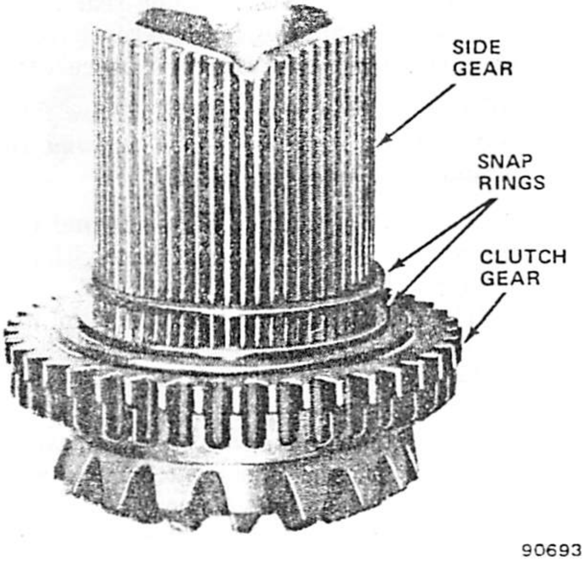

Fig. 2D-42 Side Gear Components

(4) Mount assembled coupling and gears in vise. Place wood blocks between vise jaws and side gear and clamp side gear firmly (fig. 2D-43).

CAUTION: *Wood blocks must be placed between the vise jaws and side gear to avoid damaging the gear.*

(5) Check engagement of clutch gear in viscous coupling. Be sure gear is fully engaged in coupling before proceeding. If necessary, loosen vise and reposition wood blocks so they support gear in coupling.

(6) Install rear output shaft in viscous coupling (fig. 2D-43).

(7) Install yoke on rear output shaft and install yoke retaining nut.

(8) Assemble and install socket and torque wrench on yoke retaining nut (fig. 2D-43).

(9) Rotate rear output shaft using torque wrench and measure torque required to rotate shaft in coupling.

(10) Torque required to rotate shaft in coupling should be minimum of 25 foot-pounds (34 N•m) torque.

(11) If rotating torque is less than specified, coupling has malfunctioned. If torque is at or above specified limit, coupling is in good condition.

IN-VEHICLE SERVICE

Changing Lubricant

(1) Raise vehicle.

(2) Position drain pan under transfer case.

(3) Remove fill and drain plugs, and drain lubricant.

(4) Install drain plug. Tighten plug to 35 foot-pounds (47 N•m) torque.

(5) Fill transfer case to bottom edge of fill plug hole with AMC/Jeep Automatic Transmission Fluid or equivalent labeled Dexron®.

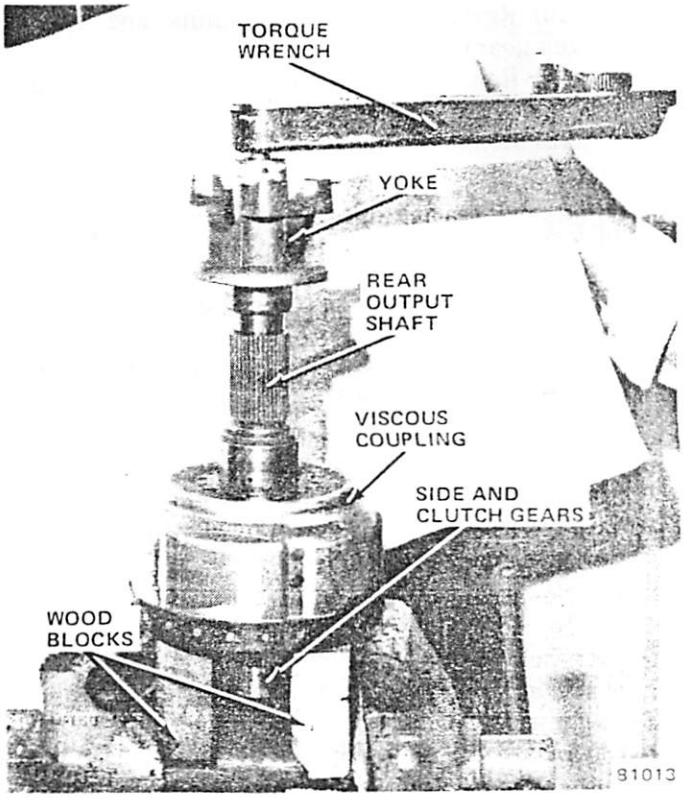

Fig. 2D-43 Torque Bias Check—On-Bench

(6) Install and tighten fill plug to 35 foot-pounds (47 N•m) torque.

(7) Remove drain pan and lower vehicle.

Speedometer Gear, Rear Bearing, Rear Seal, and Shaft Yoke Replacement

NOTE: *The front and rear yokes, seals, rear retainer and bearing and speedometer gear can all be serviced in the vehicle. The following combined procedure outlines replacement of these components.*

Replacement

(1) Raise vehicle.

(2) Position drain pan under transfer case.

(3) Remove fill and drain plugs. Drain oil from transfer case.

(4) Mark propeller shaft and transfer case yoke for assembly reference.

(5) Disconnect propeller shaft. Secure shaft to underside of vehicle.

(6) Remove and discard transfer case yoke nut and seal washer. Use Tool J-8614-01 to hold yoke while removing nut.

(7) Remove yoke. Use Tools J-8614-01, -02, -03 to remove yoke, if necessary.

(8) Remove speedometer cable from retainer.

(9) Mark rear retainer for assembly reference and remove retainer.

(10) Remove differential shims and speedometer driven gear.

(11) Remove rear output bearing snap ring and remove bearing from retainer.

(12) Remove rear seal from retainer using punch or screwdriver.

(13) Install bearing in retainer. Be sure shielded side of bearing is facing case interior. Install bearing snap ring.

(14) Install rear yoke seal using Tool J-29162 (fig. 2D-26).

(15) Install speedometer gear and differential shim.

(16) Apply Loctite 515, or equivalent sealant, to mating surface of rear retainer and install retainer. Tighten retainer bolts to 23 foot-pounds (31 N•m) torque.

(17) Install yoke, seal washer and yoke nut. Tighten nut to 120 foot-pounds (163 N•m) torque.

(18) Install speedometer cable.

(19) Connect propeller shaft.

(20) Install drain plug and fill transfer case to bottom edge of fill plug hole with AMC/Jeep Automatic Transmission Fluid or equivalent labeled Dexron II® only.

(21) Install fill plug. Tighten fill and drain plugs to 18 foot-pounds (24 N•m) torque.

(22) Remove drain pan and lower vehicle.

DISASSEMBLY

(1) Remove fill and drain plugs. Drain lubricant from transfer case.

(2) Remove front and rear output shaft yokes (fig. 2D-44). Discard yoke seal washers and yoke nuts.

(3) Mark rear retainer and rear case for assembly alignment reference.

(4) Remove rear retainer attaching bolts and remove retainer. Use plastic mallet to loosen retainer if necessary. Do not pry retainer off rear case.

(5) Remove differential shim(s) and speedometer drive gear from rear output shaft (fig. 2D-40). Tag shim(s) for assembly reference.

NOTE: *The speedometer gear fits on the shaft one way only. The long end should face the case. Note gear position for assembly reference.*

(6) Remove rear output bearing snap ring and remove bearing from retainer using plastic mallet.

NOTE: *The rear output bearing has one side shielded. Note bearing position for assembly reference.*

(7) Remove rear output shaft seal from rear retainer using screwdriver or punch.

(8) Position front case assembly on wood blocks (fig. 2D-41).

NOTE: *The wood blocks will support the case assembly in a more solid manner if "V" notches are cut in the blocks beforehand.*

(9) Remove bolts attaching rear case to front case and remove rear case. Insert screwdrivers in notches at case ends to pry rear case off front case (fig. 2D-42).

NOTE: *The two case-end bolts have flat washers and alignment dowels. Note bolt, dowel and washer location for assembly reference (fig. 2D-44).*

(10) Remove rear output shaft and viscous coupling as assembly (fig. 2D-48). Tap shaft with plastic mallet to remove it, if necessary.

(11) Remove O-ring seal and pilot roller bearings from mainshaft (fig. 2D-48).

(12) Remove rear output shaft from viscous coupling.

(13) Remove shift rail spring from rail.

(14) Remove plastic oil pump from shaft bore in rear case. Note pump position for assembly reference. End with recess in it must face shaft bore when installed.

(15) Remove rear output shaft bearing seal from case. Use screwdriver to pry seal out of seal bore.

(16) Remove front output shaft thrust bearing assembly (fig. 2D-49). Remove thick washer, bearing and thin washer. Tag assembly for installation reference.

(17) Remove driven sprocket retaining snap ring (fig. 2D-50).

(18) Remove drive sprocket, drive chain, driven sprocket, side gear clutch and clutch gear as assembly (fig. 2D-51). Place assembly on workbench and mark components for assembly installation reference, especially sprockets.

(19) Remove needle bearings and bearing spacers from mainshaft or side gear bore. Total of 82 needle bearings and two spacers are used.

(20) Remove side gear/clutch gear assembly from drive sprocket (fig. 2D-47). Remove two snap rings and remove clutch gear from side gear. Note position of snap rings and gears for assembly reference (fig. 2D-53).

(21) Remove side gear clutch (fig. 2D-54) and mainshaft thrust washer.

(22) Remove front output shaft and shaft thrust bearing assembly (fig. 2D-55). Note installation sequence of thrust bearing assembly. Correct sequence is thin race-bearing-thick race.

(23) Remove front output shaft seal from front case using screwdriver or punch.

(24) Remove shift rail spring from shift rail if not already removed. Tag spring for assembly reference.

(25) Remove clutch sleeve, mode fork and mode fork spring as assembly (fig. 2D-56). Note position of components for assembly reference. Disassemble components for cleaning and inspection.

(26) Remove mainshaft thrust washer and remove mainshaft (fig. 2D-57). Grasp shaft and pull straight up to remove.

(27) Move range operating lever downward to last detent position.

(28) Disengage range fork lug from range sector slot (fig. 2D-21).

Service Diagnosis

Condition	Possible Cause	Correction
FRONT OR REAR OF VEHICLE TENDS TO PULL OR WANDER OCCASIONALLY WHEN DRIVING IN STRAIGHT DIRECTION	(1) Incorrect or unequal tire pressures	(1) Adjust tire pressures to within ½ - 1 pound on all four wheels.
	(2) Mismatched tires	(2) Install tires of equal size and type on all four wheels.
TRANSFER CASE DIFFICULT TO SHIFT OR WILL NOT SHIFT INTO DESIRED RANGE	(1) Vehicle speed too great to permit shifting.	(1) Slow vehicle to 2-3 mph (3-4 km/h) or stop vehicle and shift into desired range
	(2) External shift linkage binding, bent, loose.	(2) Repair linkage as necessary.
	(3) Internal components worn, binding or damaged.	(3) Disassemble unit and replace worn or damaged components.
NOISY IN — OR JUMPS OUT OF 4L RANGE	(1) Transfer case not completely engaged in 4L.	(1) Stop vehicle, shift transfer case to neutral; then shift back into 4L.
	(2) Shift linkage binding bent, loose.	(2) Repair linkage as necessary.
	(3) Range fork, shift rail, annulus gear, or clutch sleeve lockplate, worn or damaged.	(3) Disassemble unit and replace worn or damaged components.
NOISY IN ALL DRIVE MODES	(1) Insufficient or incorrect lubricant.	(1) Drain and refill with Jeep, Dextron Automatic transmission fluid only. Check for leaks if fluid level was low and repair as necessary. Note: If unit is still noisy after drain and refill, disassembly and inspection may be necessary to locate source of noise.
SEVERE LOW SPEED SHUDDER NOTED DURING ROAD TEST ON 219 TRANSFER CASE	(1) Indicates low or loss of viscous silicone fluid.	(1) Check transfer case lubricant for burnt fluid containing viscous silicone fluid.
		(2) If verified remove transfer case and disassemble. Check viscous coupling for case cracks, blown seal.
		(3) Replace as necessary.
		(4) Inspect front and rear axle for correct ratio.
LUBRICANT LEAKS FROM OUTPUT SHAFT SEALS OR FROM VENT	(1) Transfer case overfilled.	(1) Drain to correct level.
	(2) Vent closed or restricted.	(2) Clean or replace vent.
	(3) Shaft seals damaged or installed incorrectly.	(3) Replace seals. Be sure seal lip faces interior of case when installed. Also check yoke seal surfaces for nicks, scratches. Use crocus cloth to remove minor surface irregularities.

90771

(29) Remove annulus gear retaining snap ring and thrust washer (fig. 2D-58).

(30) Remove annulus gear and range fork as assembly (fig. 2D-59). Separate components for cleaning and inspection.

(31) Remove planetary thrust washer from planetary assembly hub (fig. 2D-60).

(32) Remove planetary assembly (fig. 2D-61). Grasp planetary hub and lift assembly upward to remove it.

(33) Remove mainshaft thrust bearing from input gear (fig. 2D-61).

(34) Remove input gear and remove input gear thrust bearing and race (fig. 2D-62).

(35) Remove range sector detent ball and spring retaining bolt and remove detent ball and spring (fig. 2D-10).

(36) Remove range sector and operating lever attaching nut and lockwasher and remove lever.

(37) Remove range sector.

(38) Remove range sector shaft O-ring and retainer (fig. 2D-44).

(39) Remove input gear oil seal from front case using screwdriver or punch.

CLEANING AND INSPECTION

Wash all parts thoroughly in clean solvent. Be sure all old lubricant, metallic particles, dirt, or foreign material are removed from the surfaces of every part. Apply compressed air to each oil feed port and channel in each case half to remove any obstructions or cleaning solvent residue.

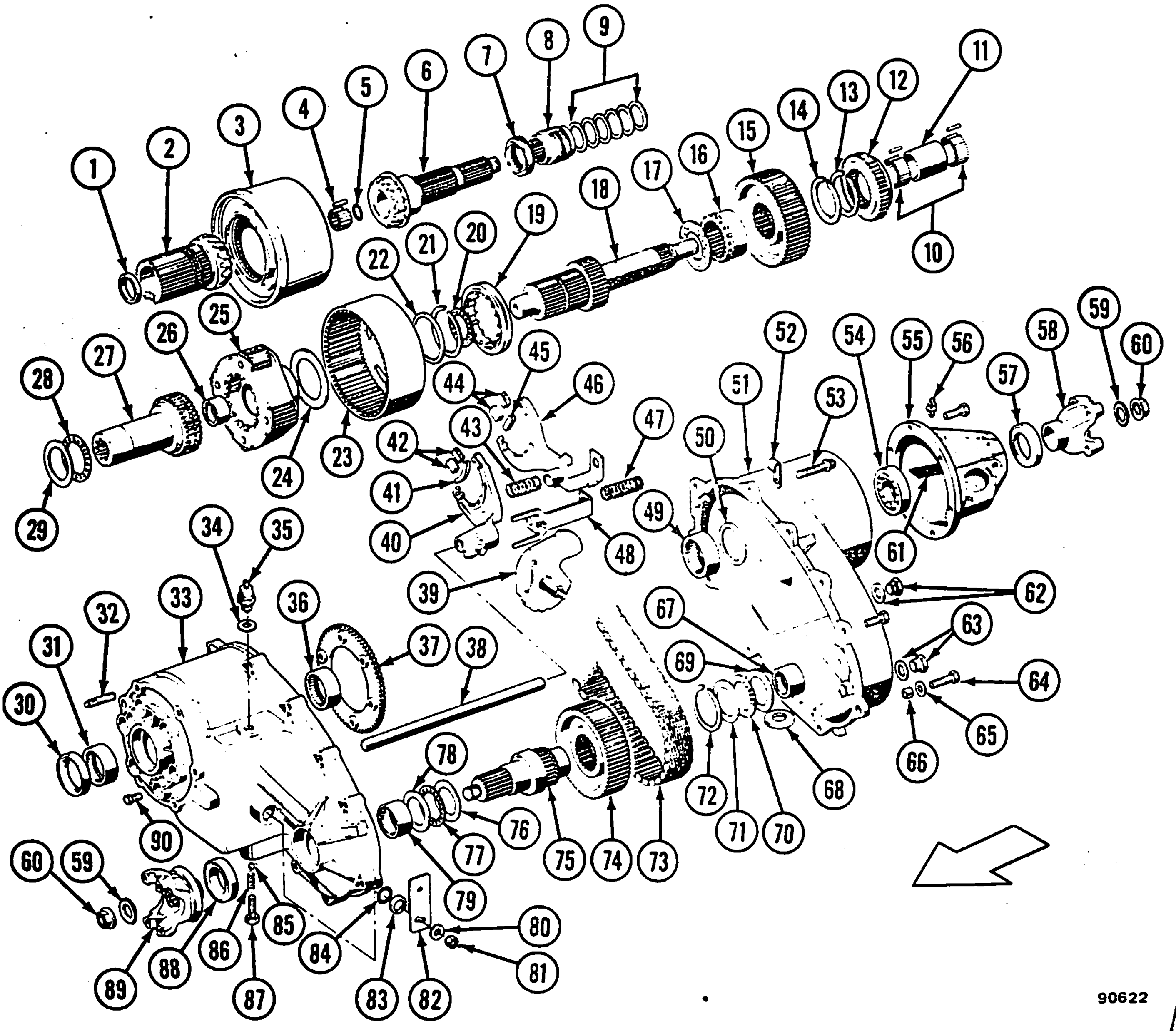

Fig. 2D-44 Model 219 Quadra-Trac Transfer Case

1. MAINSHAFT REAR BEARING SPACER – SHORT (2)
2. SIDE GEAR
3. VISCOUS COUPLING AND DIFFERENTIAL ASSEMBLY
4. MAINSHAFT REAR PILOT ROLLER BEARINGS (15)
5. MAINSHAFT O-RING
6. REAR OUTPUT SHAFT
7. OIL PUMP
8. SPEEDOMETER GEAR
9. DIFFERENTIAL END PLAY SHIMS (SELECTIVE)
10. MAINSHAFT NEEDLE BEARINGS (82)
11. MAINSHAFT REAR BEARING SPACER
12. CLUTCH GEAR
13. CLUTCH GEAR LOCATING RING
14. DRIVE SPROCKET LOCATING RING
15. DRIVE SPROCKET
16. SIDE GEAR CLUTCH
17. MAINSHAFT THRUST WASHER
18. MAINSHAFT
19. CLUTCH SLEEVE
20. MAINSHAFT THRUST BEARING
21. ANNULUS GEAR RETAINING RING
22. ANNULUS GEAR THRUST WASHER
23. ANNULUS GEAR
24. PLANETARY THRUST WASHER
25. PLANETARY ASSEMBLY
26. MAINSHAFT FRONT PILOT BEARING
27. INPUT GEAR
28. INPUT GEAR THRUST BEARING
29. INPUT GEAR THRUST BEARING RACE
30. INPUT GEAR OIL SEAL
31. INPUT GEAR FRONT BEARING
32. FRONT CASE MOUNTING STUD (6)
33. FRONT CASE
34. LOCK MODE INDICATOR SWITCH GASKET
35. LOCK MODE INDICATOR SWITCH
36. INPUT GEAR REAR BEARING
37. LOW RANGE LOCKPLATE
38. SHIFT RAIL
39. RANGE SECTOR
40. RANGE FORK
41. RANGE FORK INSERT
42. RANGE FORK PADS
43. MODE FORK SPRING
44. MODE FORK PADS
45. MODE FORK INSERT
46. MODE FORK
47. SHIFT RAIL SPRING
48. MODE FORK BRACKET
49. REAR OUTPUT SHAFT BEARING
50. REAR OUTPUT SHAFT BEARING SEAL
51. REAR CASE
52. WIRING CLIP
53. SPLINE BOLT
54. REAR OUTPUT BEARING
55. REAR RETAINER
56. VENT
57. OUTPUT SHAFT OIL SEAL
58. REAR YOKE
59. YOKE SEAL WASHER
60. YOKE LOCKNUT
61. VENT CHAMBER SEAL
62. FILL PLUG AND GASKET
63. DRAIN PLUG AND GASKET
64. REAR CASE BOLT
65. WASHER (2)
66. CASE ALIGNMENT DOWEL
67. FRONT OUTPUT SHAFT REAR BEARING
68. MAGNET
69. FRONT OUTPUT SHAFT REAR THRUST BEARING RACE (THICK)
70. FRONT OUTPUT SHAFT REAR THRUST BEARING
71. FRONT OUTPUT SHAFT REAR THRUST BEARING RACE (THIN)
72. DRIVEN SPROCKET RETAINING SNAP RING
73. DRIVE CHAIN
74. DRIVEN SPROCKET
75. FRONT OUTPUT SHAFT
76. FRONT OUTPUT SHAFT FRONT THRUST BEARING RACE (THIN)
77. FRONT OUTPUT SHAFT FRONT THRUST BEARING
78. FRONT OUTPUT SHAFT FRONT THRUST BEARING RACE (THICK)
79. FRONT OUTPUT SHAFT FRONT BEARING
80. WASHER
81. LOCKNUT
82. OPERATING LEVER
83. RANGE SECTOR SHAFT SEAL RETAINER
84. RANGE SECTOR SHAFT SEAL
85. DETENT BALL
86. DETENT SPRING
87. DETENT RETAINING BOLT
88. FRONT OUTPUT SHAFT SEAL
89. FRONT YOKE
90. LOCKPLATE BOLTS

90622

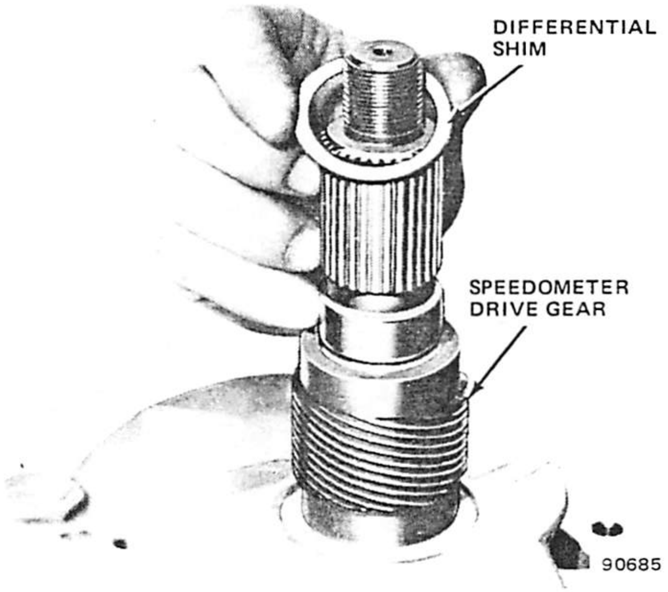

Fig. 2D-45 Differential Shim, Speedometer Gear and Oil Pump

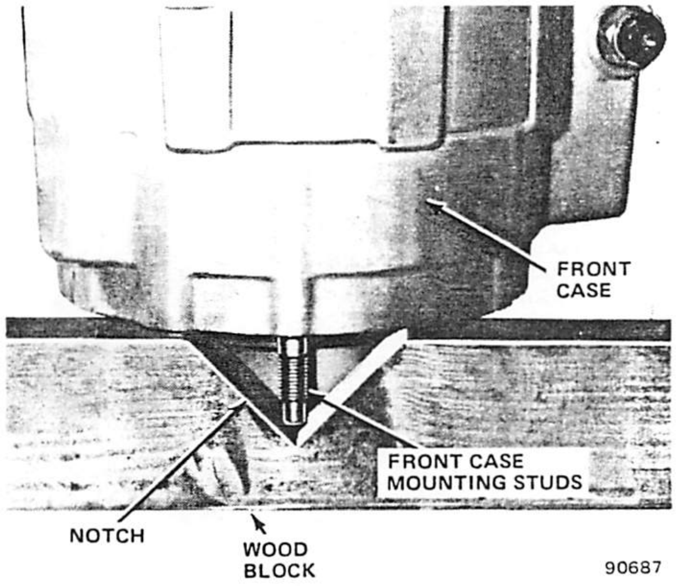

Fig. 2D-46 Mounting Transfer Case on Wood Blocks

Inspect all gear teeth for signs of excessive wear or damage and check all gear splines for burrs, nicks, wear or damage. Remove minor nicks or scratches with an oilstone. Replace any part exhibiting excessive wear or damage.

Inspect all snap rings and thrust washers for evidence of excessive wear, distortion, or damage. Replace any of these parts if they exhibit these conditions.

Inspect the two case halves for cracks, porosity, damaged mating surfaces, stripped bolt threads, or distortion. Replace any part that exhibits these conditions.

Inspect the low range lockplate in the front case. If the lockplate teeth or the plate hub is cracked, broken, chipped, or excessively worn, replace the lockplate and the lockplate attaching bolts. Refer to the Low Range Lockplate Replacement procedure in the Subassembly Overhaul section.

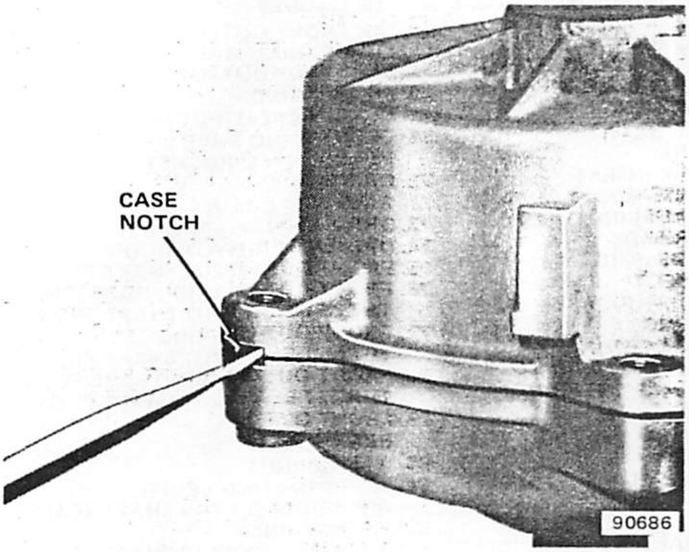

Fig. 2D-47 Rear Case Removal

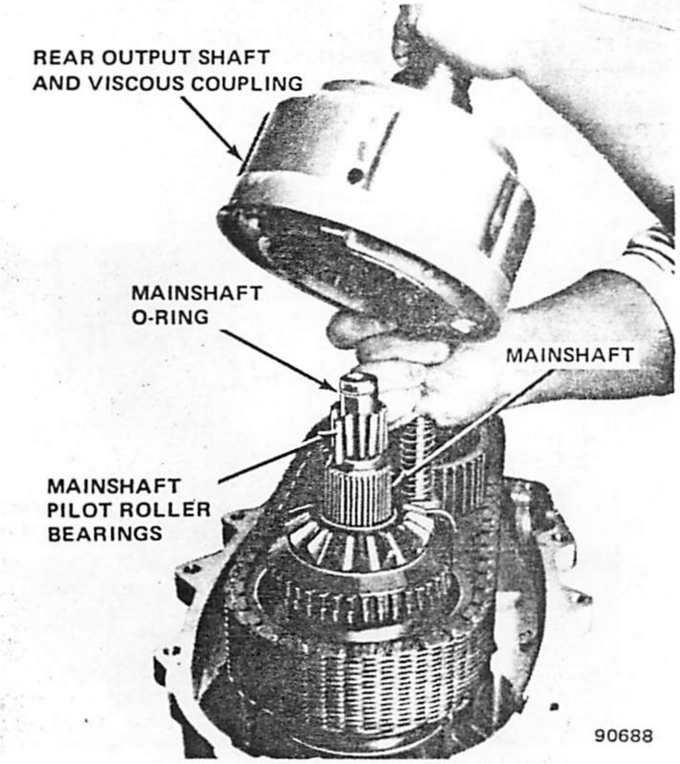

Fig. 2D-48 Viscous Coupling and Rear Output Shaft Removal/Installation

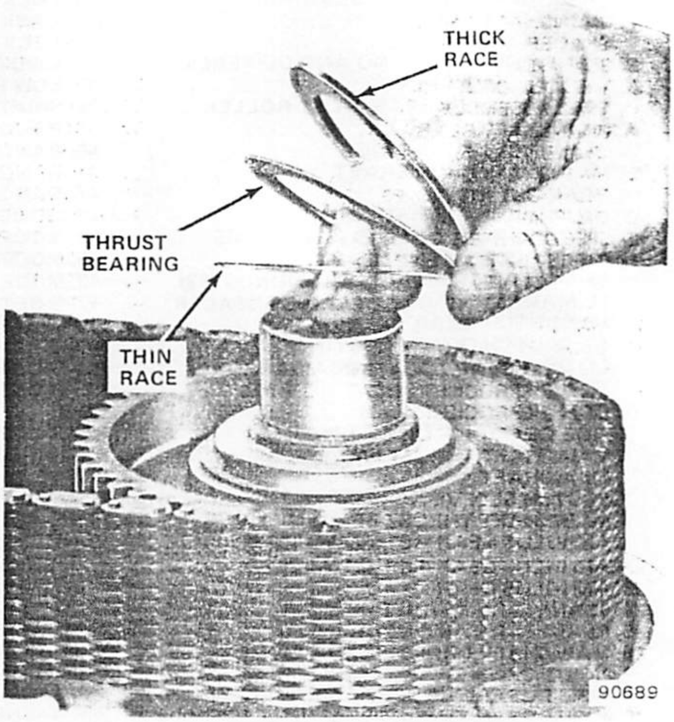

Fig. 2D-49 Front Output Shaft Rear Thrust Bearing Assembly Removal/Installation

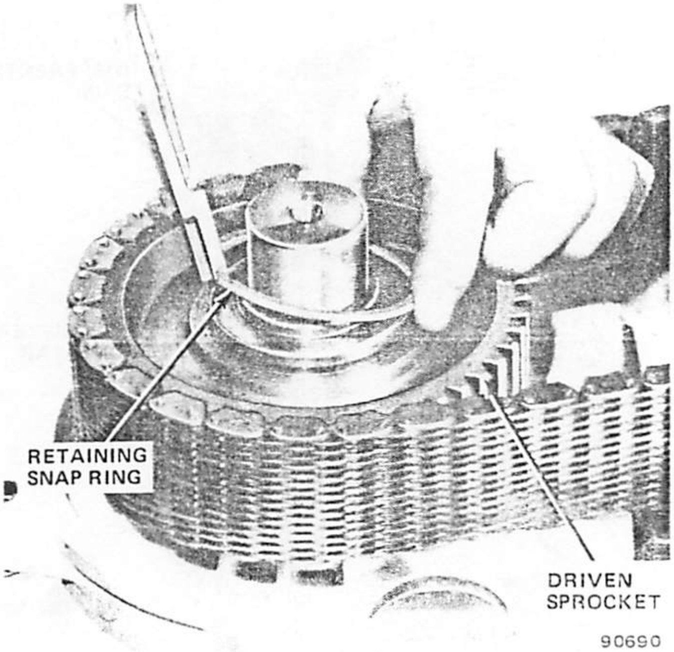

Fig. 2D-50 Driven Sprocket Retaining Snap Ring Removal/Installation

Inspect the condition of all needle, roller, ball and thrust bearings in the front and rear case halves, and the input gear. Also check the condition of the bearing bores in both cases and in the input gear, rear output shaft, side gear, and rear retainer. Replace any part that exhibits signs of excessive wear or damage. If the case or input gear bearings require replacement, refer to Bearing Replacement in the Subassembly Overhaul section.

Inspect the coupling and pinion gears. If the coupling is leaking fluid or the gears are worn or damaged in any way, replace the coupling as an assembly only. Do not attempt to service the unit.

SUBASSEMBLY OVERHAUL

Lockplate Replacement

(1) Remove and discard lockplate attaching bolts.

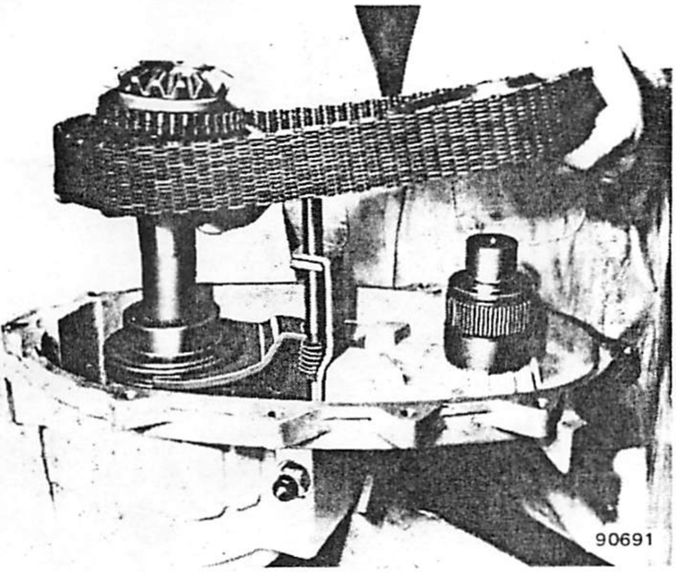

Fig. 2D-51 Sprocket and Chain Removal—Installation

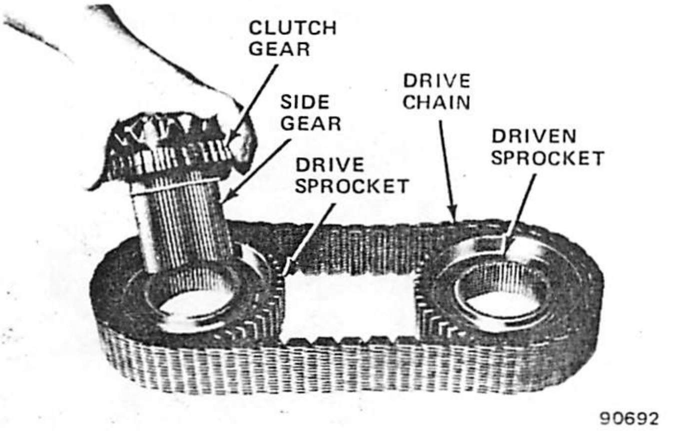

Fig. 2D-52 Side Gear, Clutch Gear, Sprockets and Chain Assembly

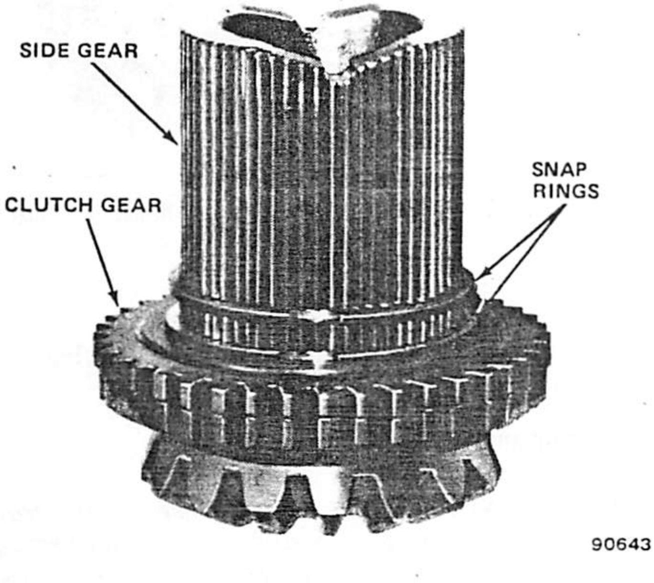

Fig. 2D-53 Side Gear Components

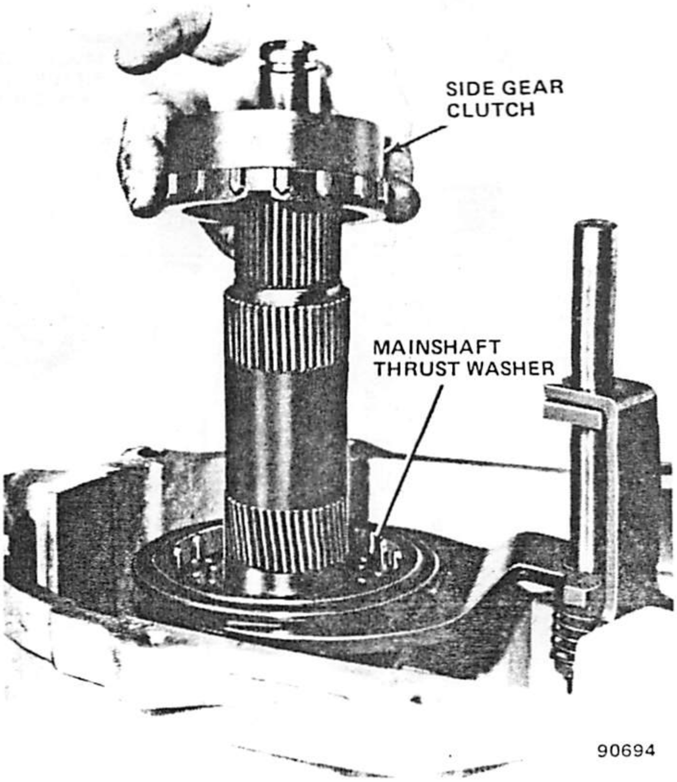

Fig. 2D-54 Side Gear Clutch Removal/Installation

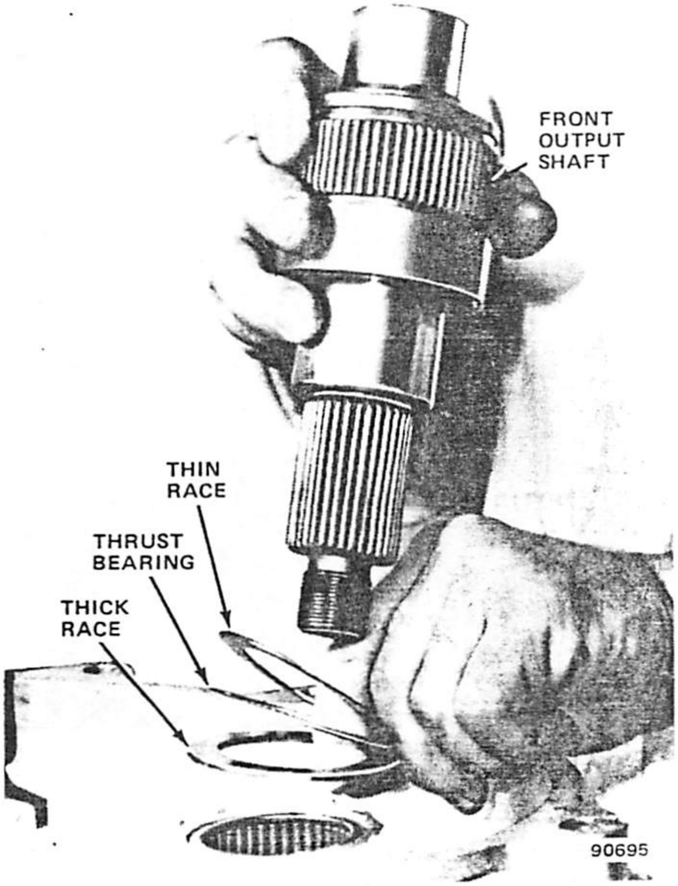

Fig. 2D-55 Front Output Shaft and Shaft Front Thrust Bearing Removal/Installation

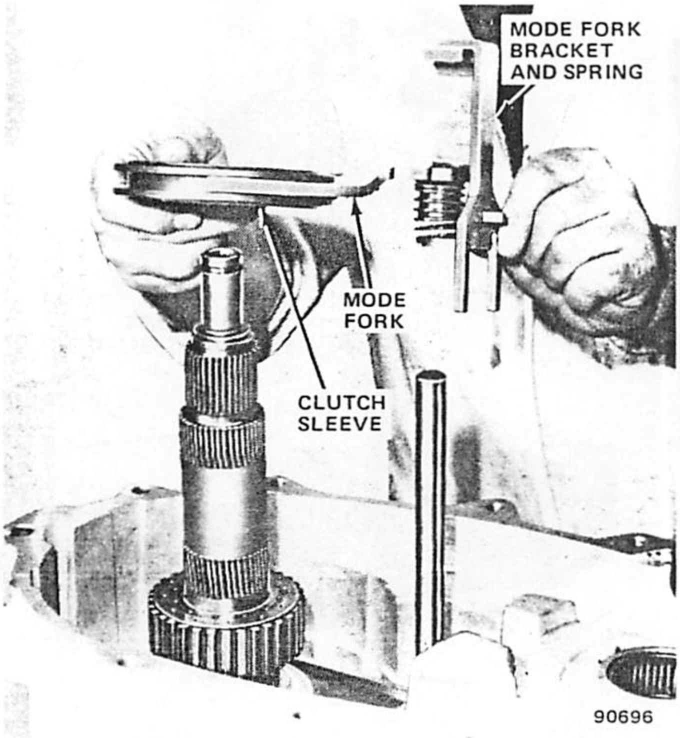

Fig. 2D-56 Clutch Sleeve and Mode Fork Removal/Installation

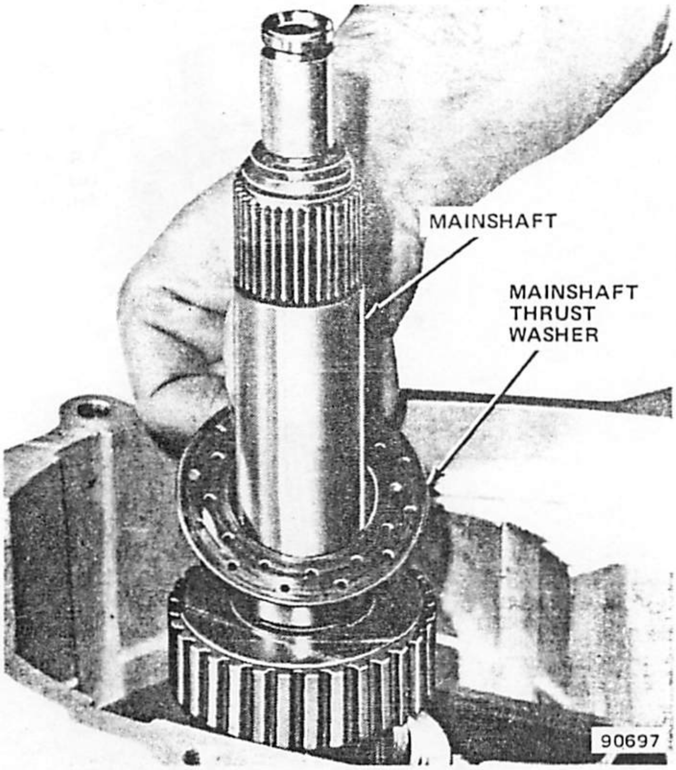

Fig. 2D-57 Mainshaft and Thrust Washer

(2) Remove lockplate from case.

(3) Coat case and lockplate surfaces around bolt holes with Loctite 515, or equivalent sealant.

(4) Position new lockplate in case and align bolt holes in lockplate and case.

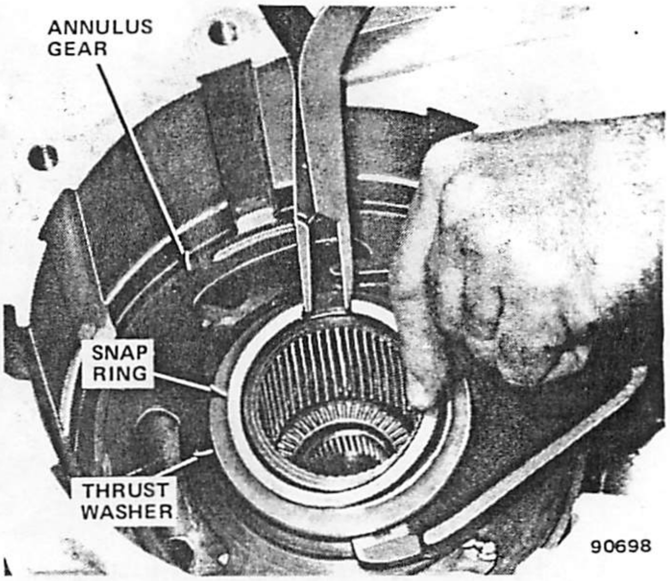

Fig. 2D-58 Annulus Gear Snap Ring and Thrust Washer Removal/Installation

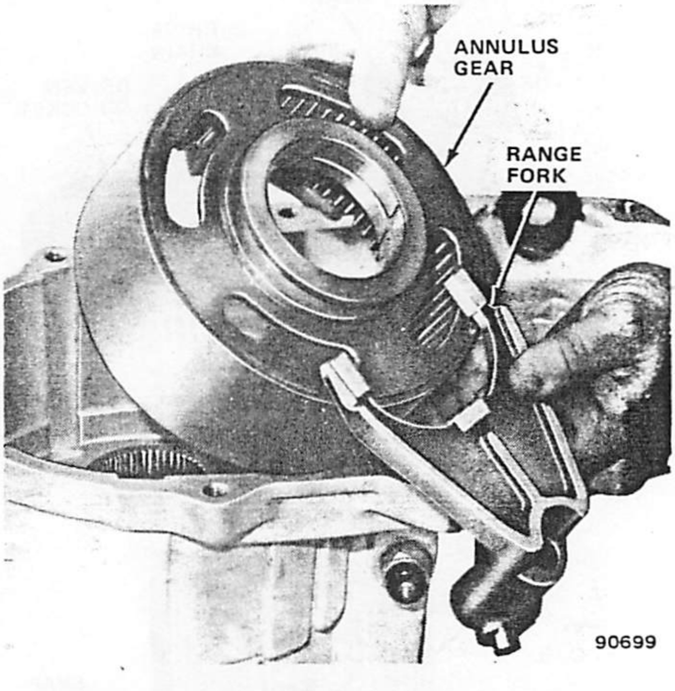

Fig. 2D-59 Annulus Gear and Range Fork Removal/Installation

(5) Coat new lockplate attaching bolts with Loctite 271, or equivalent adhesive sealant.

(6) Install and tighten lockplate attaching bolts to 30 foot-pounds (41 N•m) torque.

Bearing and Bushing Replacement

CAUTION: *All of the bearings used in the transfer case must be correctly positioned to avoid covering the bearing oil feed holes. After replacing any bearing, check the bearing position to be sure the feed hole is not covered by the bearing.*

Rear Output Shaft Bearing

(1) Remove bearing using Driver Handle J-8092 and Remover J-29165. Refer to figure 2D-27 for similar tool setup.

(2) Install bearing using Driver Handle J-8092 and Installer J-29166.

(3) Remove bearing installer tools and check bearing position to be sure the bearing oil feed hole is not covered.

Front Output Shaft Front Bearing

(1) Remove bearing using Driver Handle J-8092 and Remover J-29168 (fig. 2D-27).

(2) Install new bearing using Driver Handle J-8092 and Installer J-29167 (fig. 2D-28).

(3) Remove installer tools and check bearing position to be sure oil feed hole is not covered.

Front Output Shaft Rear Bearing

(1) Remove bearing using Remover J-26941 and Slide Hammer J-2619-01 (fig. 2D-29).

(2) Install new bearing using Driver Handle J-8092 and Installer J-29163 (fig. 2D-30).

(3) Remove installer tools and check bearing position to be sure oil feed hole is not covered. Also be sure bearing is seated flush with edge of bore in case to allow room for thrust bearing assembly.

Input Gear Front/Rear Bearings

(1) Remove both bearings simultaneously using Driver Handle J-8092 and Remover J-29170 (fig. 2D-31).

(2) Install new bearings one at a time. Install rear bearing first; then install front bearing. Use Driver Handle J-8092 and Installer J-29169 (fig. 2D-32).

(3) Remove installer tools and check bearing position to be sure oil feed holes are not covered. Also be sure bearings are flush with case bore surfaces.

Mainshaft Front Pilot Bearing

(1) If bearing cannot be removed by hand, remove it using Slide Hammer J-2619-01 and Remover J-29369-1 or similar internal type blind hole bearing puller (fig. 2D-33).

(2) If necessary, install new bearing using Driver Handle J-8092 and Installer J-29174. Be sure bearing is flush with bore (fig. 2D-34).

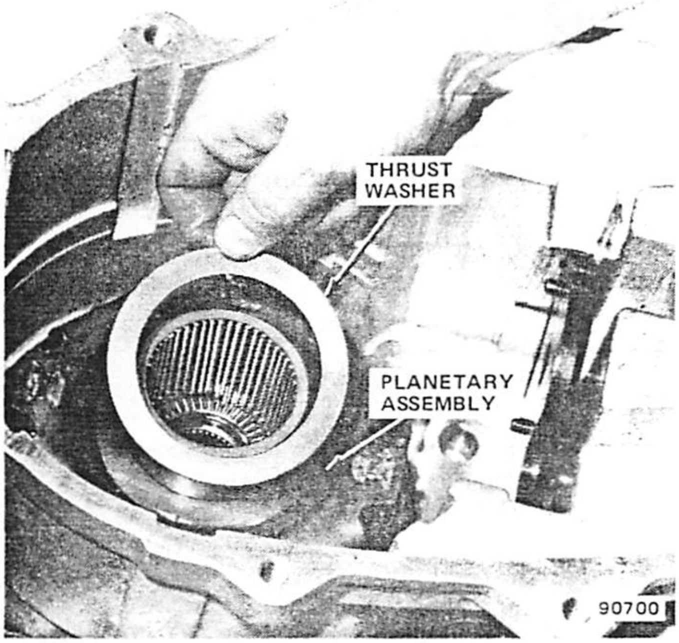

Fig. 2D-60 Planetary Thrust Washer Removal/Installation

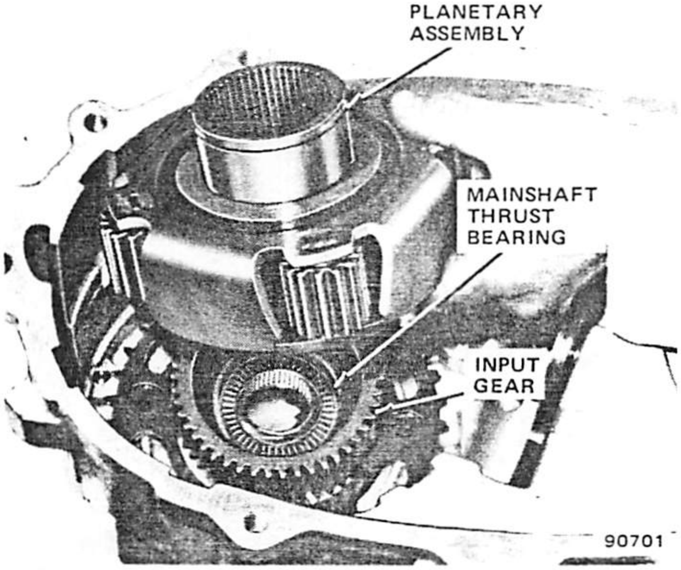

Fig. 2D-61 Planetary Assembly Removal/Installation

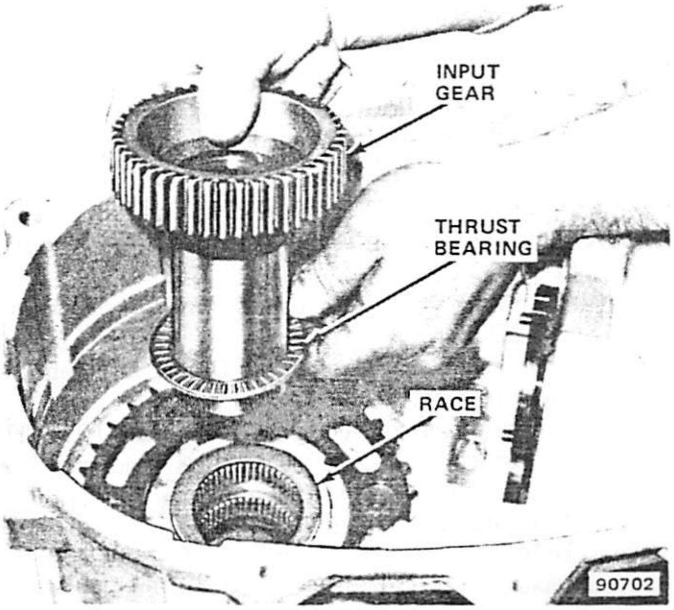

Fig. 2D-62 Input Gear and Thrust Bearing Removal/Installation

(3) If bearing was seated using installer tools, check bearing position to be sure oil feed hole is not covered. Also be sure bearing is seated flush with edge of bearing bore.

Rear Output Bearing and Seal

(1) Remove snap ring and remove bearing using rawhide mallet or brass punch.

(2) Install new bearing using Tools J-8092 and J-7818 (fig. 2D-25).

CAUTION: *Be sure the shielded side of the bearing faces the interior of the transfer case after installing it.*

(3) Install bearing snap ring.

(4) Install seal using Tool J-29162 (fig. 2D-26).

Annulus Gear Bushing Replacement

(1) Remove bushing using Driver Handle J-8092 and Remover—Installer Tool J-29185 (fig. 2D-35).

(2) Install new bushing using Tools J-8092 and J-29185 (fig. 2D-36).

(3) Remove any chips generated by bushing removal/installation.

ASSEMBLY

NOTE: *During assembly, prelubricate all transfer case internal components with Jeep Dexron II or petroleum jelly where indicated. Do not use chassis lubricant or similar "heavy" type lubricants.*

(1) Install new input gear and rear output shaft bearing oil seals. Seat seals flush with edge of seal bore or in seal groove in case. Coat seal lips with petroleum jelly after installation.

(2) Install input gear thrust bearing race in case counterbore (fig. 2D-62).

(3) Install input gear thrust bearing on input gear and install gear and bearing in case (fig. 2D-62).

(4) Install mainshaft thrust bearing in bearing recess in input gear (fig. 2D-61).

(5) Install planetary assembly on input gear. Be sure planetary pinion teeth mesh fully with input gear (fig. 2D-61).

(6) Install planetary thrust washer on planetary hub (fig. 2D-60).

(7) Install new sector shaft O-ring and retainer in shaft bore in case.

(8) Install range sector in front case (fig. 2D-63). Install operating lever on sector shaft and install lever attaching washer and locknut on shaft. Tighten locknut to 17 foot-pounds (23 N•m) torque.

(9) Install detent spring, ball and retaining bolt in front case detent bore. Tighten bolt to 22 foot-pounds (30 N•m) torque (fig. 2D-10).

(10) Move range sector to last detent position.

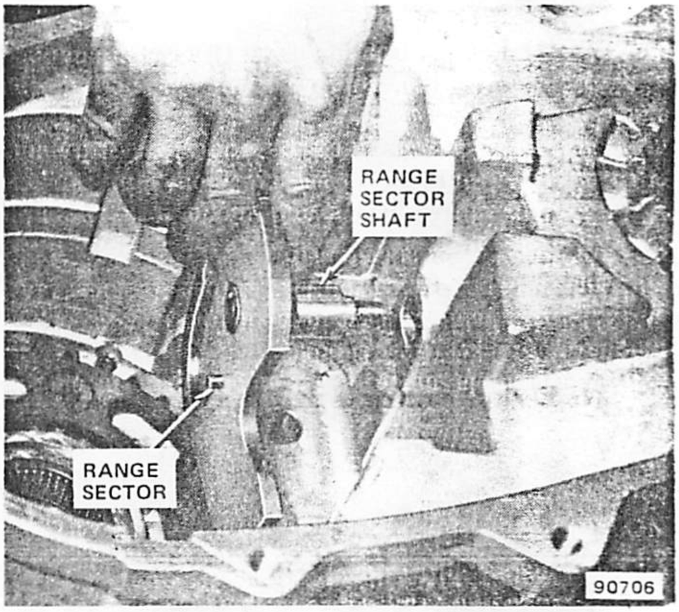

Fig. 2D-63 Range Sector Installation

(11) Assemble annulus gear and range fork. Install assembled fork and gear on and over planetary assembly. Be sure annulus gear is fully meshed with planetary pinions (fig. 2D-59).

(12) Insert range fork lug in range sector detent slot (fig. 2D-21).

(13) Install annulus thrust washer and annulus retaining ring on annulus gear hub (fig. 2D-58).

(14) Align mainshaft thrust washer in input gear, if necessary.

(15) Install mainshaft. Be sure shaft is fully seated in input gear.

(16) Install mainshaft thrust washer on mainshaft (fig. 2D-64).

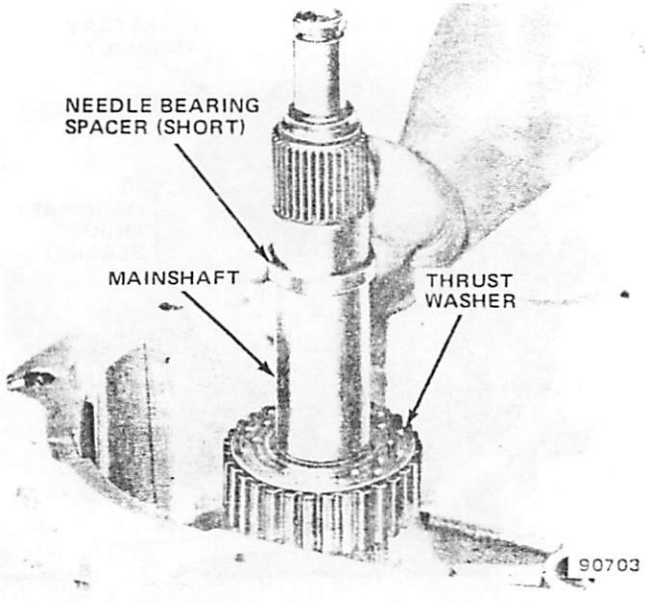

Fig. 2D-64 Mainshaft and Thrust Washer Installation

(17) Apply liberal coating of petroleum jelly to mainshaft needle bearing surface and to all 82 needle bearings. Install 41 bearings on shaft. Be sure bearings are in vertical position and seat on mainshaft. Use additional petroleum jelly to hold bearings in place if necessary (fig. 2D-65).

(18) Install long mainshaft needle bearing spacer on shaft (fig. 2D-65). Lower spacer onto previously installed needle berings carefully to avoid displacing bearings.

Fig. 2D-65 Mainshaft Needle Bearings and Spacer Installation

(19) Align shift rail bore in case with bore in range fork and install shift rail.

NOTE: *Remove all traces of oil from the case shift rail bore before installing the rail. Oil in the case bore may prevent the rail from seating completely and prevent rear case installation.*

(20) Assemble mode fork, mode fork spring and mode fork bracket (fig. 2D-66).

(21) Install clutch sleeve in mode fork (fig. 2D-56). Be sure sleeve is positioned so I.D. numbers on sleeve face upward after sleeve is installed.

(22) Align clutch sleeve and mode fork assembly with shift rail and install assembly on shift rail and mainshaft. Be sure clutch sleeve is meshed with mainshaft gear.

(23) Lubricate remaining 41 mainshaft needle bearings and position bearings on shaft. Use additional petroleum jelly to hold bearings on shaft, if necessary.

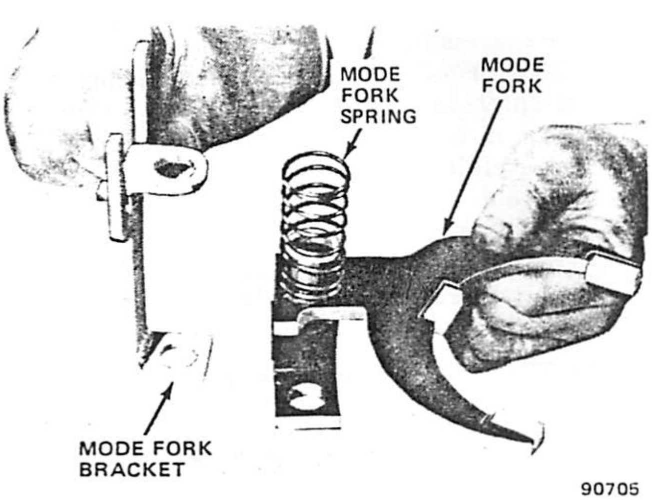

Fig. 2D-66 Assembling Mode Fork, Spring and Bracket

(24) Install side gear clutch on mainshaft with clutch gear teeth facing downward (fig. 2D-54). Be sure gear teeth mesh with clutch sleeve.

(25) Install remaining short mainshaft needle bearing spacer. Install spacer carefully to avoid displacing previously installed bearings.

(26) Install front output shaft front thrust bearing assembly in front case. Correct installation sequence is thick race-thrust bearing-thin race.

(27) Install front output shaft in front case (fig. 2D-55).

(28) Install clutch gear on side gear (fig. 2D-53). Tapered side of clutch gear teeth must face side gear teeth.

(29) Install clutch gear and drive sprocket locating snap rings on side gear. Install snap rings so snap rings face each other (fig. 2D-53).

(30) Position drive and driven sprockets in drive chain and install assembled side and clutch gears in drive sprocket (fig. 2D-52).

(31) Install assembled drive chain, sprockets and side gear on mainshaft and front output shaft (fig. 2D-51). Align sprockets with shafts, keep assembly level and carefully lower assembly onto both shafts simultaneously. Take care to avoid displacing mainshaft needle bearings during installation.

(32) Install driven sprocket retaining snap ring (fig. 2D-50).

(33) Install front output shaft rear thrust bearing assembly on front output shaft. Correct installation sequence is thin race-thrust bearing-thick race (fig. 2D-49).

(34) Install shift rail spring on shift rail.

(35) Install new O-ring on mainshaft pilot bearing hub (fig. 2D-48).

(36) Coat mainshaft pilot roller bearing hub and pilot roller bearings with liberal quantity of petroleum jelly and install rollers on shaft. Use enough petroleum jelly to hold bearing rollers on shaft (fig. 2D-48).

(37) Install rear output shaft in viscous coupling. Be

sure shaft is fully seated.

(38) Install assembled viscous coupling and rear output shaft on mainshaft (fig. 2D-48). Align mainshaft pilot hub with pilot bearing bore in rear output shaft and carefully lower assembly onto mainshaft. Take care to avoid displacing pilot roller bearings during installation.

(39) Align clutch gear teeth with viscous coupling teeth and seat coupling fully onto clutch gear (fig. 2D-67).

NOTE: *When correctly installed, the clutch gear teeth will not be visible or extend out of the coupling.*

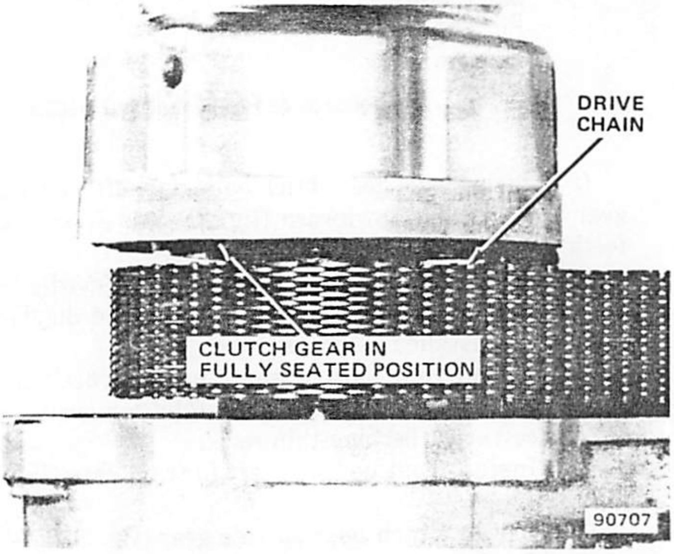

Fig. 2D-67 Seating Viscous Coupling on Clutch Gear

(40) Install magnet in front case, if removed.

(41) Clean mating surfaces of front and rear cases thoroughly.

(42) Apply Loctite 515, or equivalent sealant, to mating surface of front case and to all case attaching bolts.

(43) Install rear case on front case. Align case dowels and install case attaching bolts. Tighten bolts to 22 foot-pounds (30 N•m) torque.

NOTE: *The two case-end dowel bolts require flat washers.*

(44) Install oil pump on rear output shaft and seat it in case. Install pump so side with recess faces interior of case (fig. 2D-45).

(45) Install speedometer drive gear and differential shim on output shaft (fig. 2D-45).

(46) Install vent chamber seal in rear retainer, if removed.

(47) Align and install rear retainer on rear case. Tighten retainer bolts finger-tight only.

(48) Install yoke on rear output shaft. Tighten yoke nut finger-tight only.

(49) Mount Dial Indicator J-8001 on rear retainer. Position indicator stylus so it contacts top of yoke nut (fig. 2D-68).

(50) Install yoke on front output shaft and rotate front shaft ten complete revolutions.

(51) Rotate front output shaft again and note end play registered on dial indicator. End play should be 0.002 to 0.010 inches (0.05 to 0.25 mm). If end play is correct, go to next step. If end play must be adjusted, remove rear retainer, add or subtract differential shims as required, and check end play again.

(52) Remove both output shaft yokes. Discard old yoke nuts.

(53) Install new front and rear yoke seals if not installed previously.

(54) Remove rear retainer bolts, apply Loctite 515, or equivalent sealant, to mating surface of retainer and to bolts and reinstall bolts. Tighten bolts to 22 foot-pounds (30 N•m) torque.

(55) Install new yoke seal washers on output shafts, install yokes on shafts and install new yoke nuts. Tighten nuts to 110 foot-pounds (149 N•m) torque.

(56) Install drain plug. Tighten plug to 35 foot-pounds (47 N•m) torque.

(57) Pour 4 pints (1.9 liters) of AMC/Jeep Automatic Transmission Fluid or equivalent labeled Dexron II® into transfer case through fill plug hole, and install fill plug. Tighten plug to 35 foot-pounds (47 N•m) torque.

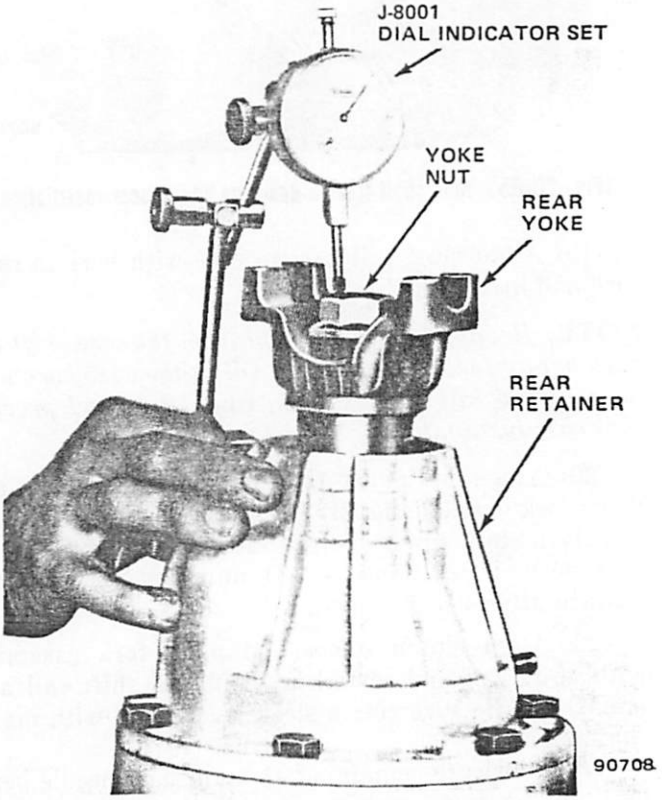

Fig. 2D-68 Checking Differential End Play

SPECIFICATIONS

Specifications—Model 219 Quadra-Trac Transfer Case

Transfer Case Type	4 position, dual range, full time 4-wheel drive unit with integral low range and a neutral and lock position
Torque Transmittal Mode	Dual sprockets with connecting drive chain and an interaxle differential — viscous coupling unit
Low Range Reduction Ratio and Mode	2.61:1 through annulus gear and planetary carrier assembly
Drive Positions and Shift Controls	4H, 4L, Neutral, Lock. Ranges selected via floor mounted shift lever (4H range is fully differentiated. 4L and Lock ranges are undifferentiated
Lubricant Capacity and Type	4 pints (1.9 liters) Jeep, Dextron II Automatic transmission fluid only.

90769

Torque Specifications

Service Set-To Torques should be used when assembling components. Service In-Use Recheck Torques should be used for checking a pre-tightened item.

	USA (ft-lbs)		Metric (N·m)	
	Service Set-To Torque	Service In-Use Recheck Torque	Service Set-To Torque	Service In-Use Recheck Torque
Detent Retainer Bolt	23	20-25	31	27-34
Drain and Fill Plugs	35	30-40	47	40-54
Front/Rear Yoke Nuts	120	90-130	163	122-176
Indicator Switch	18	15-20	24	20-34
Operating Lever Locknut	18	14-20	24	19-27
Rear Case-to-Front Case Bolts (All)	23	20-25	31	27-34
Rear Retainer Bolts	23	20-25	31	27-34

All torque values given in foot-pounds and newton-meters with dry fits unless otherwise specified.

90620

MODEL 300 TRANSFER CASE

GENERAL

The model 300 transfer case is used in CJ and Scrambler models only. It is a gearbox unit having the gears positioned in a layshaft-type of arrangement. The 300 has a cast iron case, four gear positions and employs an external floor mounted gearshift linkage for range control. The 300 is a part-time four-wheel drive unit providing four-wheel high and low ranges, a neutral position and two-wheel high range. The four-wheel high and low ranges are undifferentiated. Manual locking front hubs are standard equipment with this transfer case. In addition, the 300 is used with both manual and automatic transmission applications. In four-wheel low range, reduction ratio is 2.6:1.

Transfer Case Shift Pattern

Transfer case shifting is controlled by a floor mounted shift lever located on the floorpan transmission tunnel. The shift pattern is in a straight line for all CJ and Scrambler models (fig. 2D-69). Shift knob sequence is 4H (four-wheel high), 2H (two-wheel high), N (neutral) and 4L (four-wheel low).

IDENTIFICATION

An identification tag that displays the vendor and Jeep part numbers is attached to the intermediate shaft lockplate bolt. This information is necessary to obtain correct service replacement parts.

LUBRICATION

The model 300 lubricant should be changed and the level inspected at the intervals specified in the Maintenance Schedule. When adding lubricant or refilling the transfer case after service, use SAE 85W-90, API grade GL-5 gear lubricant only. Lubricant capacity of the model 300 is 4 pints (1.9 liters).

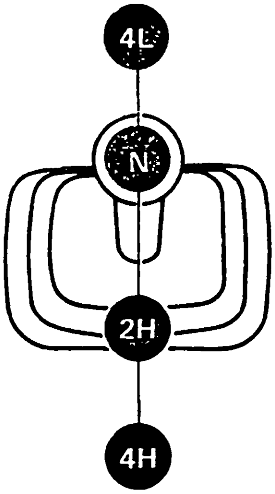

Fig. 2D-69 Transfer Case Shift Pattern—Model 300

POWER FLOW

In all drive ranges, incoming torque from the transmission is transmitted to the geartrain through the input shaft and rear output shaft gear (fig. 2D-70).

In 2H range, the front output shaft clutch sleeve is not shifted and remains in a neutral position. The rear output shaft clutch sleeve is shifted into engagement with the input gear. Torque flows from the input shaft and gear through the sleeve and to the rear output shaft and yoke. The intermediate gear idles on the input gear but does not transfer torque to the front output shaft. This occurs because the front shaft sleeve is in neutral and the front output gear idles on the intermediate gear.

In 4H range, both clutch sleeves are shifted into engagement with the front and rear output shaft gears. Torque flows through the input shaft and rear output shaft gear to the larger intermediate gear. This intermediate gear transmits torque to the front output shaft through the front output shaft gear which is meshed with the larger intermediate gear.

In 4L range, the path of torque is similar to 4H range but with one major exception. In this range, the clutch sleeves are shifted into engagement with the front and rear output shaft clutch gears. Torque transfer now flows from the input shaft to the front and rear output shafts through the clutch gears. The clutch gears are now meshed with the smaller intermediate gear to produce a gear reduction ratio of 2.6:1.

SERVICE DIAGNOSIS

Before attempting to repair a suspected transfer case malfunction, check all other drive line components beforehand. The actual cause of a problem may be related to such items as the front hubs, axles, propeller shafts, wheels and tires, transmission, engine, or clutch instead. If all drive line components are in good condition and operating properly, refer to the Service Diagnosis charts for further information.

IN-VEHICLE SERVICE

Shift Rod Oil Seal Replacement

(1) If left-side shift rod seal is to be replaced, shift transfer case into 4L position.

(2) Raise vehicle.

(3) Remove clevis pins connecting control links to transfer case shift rods.

(4) Remove shift rod oil seal using Tool J-25175 (fig. 2D-71).

(5) Install replacement seal using Thimble and Driver Tool J-25167 (fig. 2D-72).

(6) Install clevis pins connecting control links to transfer case shift rods. Use replacement cotter pins to secure pins.

(7) Lower vehicle.

Front—Rear Yoke Oil Seal Replacement

(1) Raise vehicle.

(2) Place support stand under transmission and remove rear crossmember.

(3) Disconnect front or rear propeller shaft at the transfer case yoke. Place alignment marks on shaft and yoke for assembly reference before disconnecting shaft.

(4) Remove transfer case yoke nut and washer using Tool J-8614-01 (fig. 2D-73).

(5) Remove transfer yoke using Tools J-8614-01, 02, 03, (fig. 2D-74).

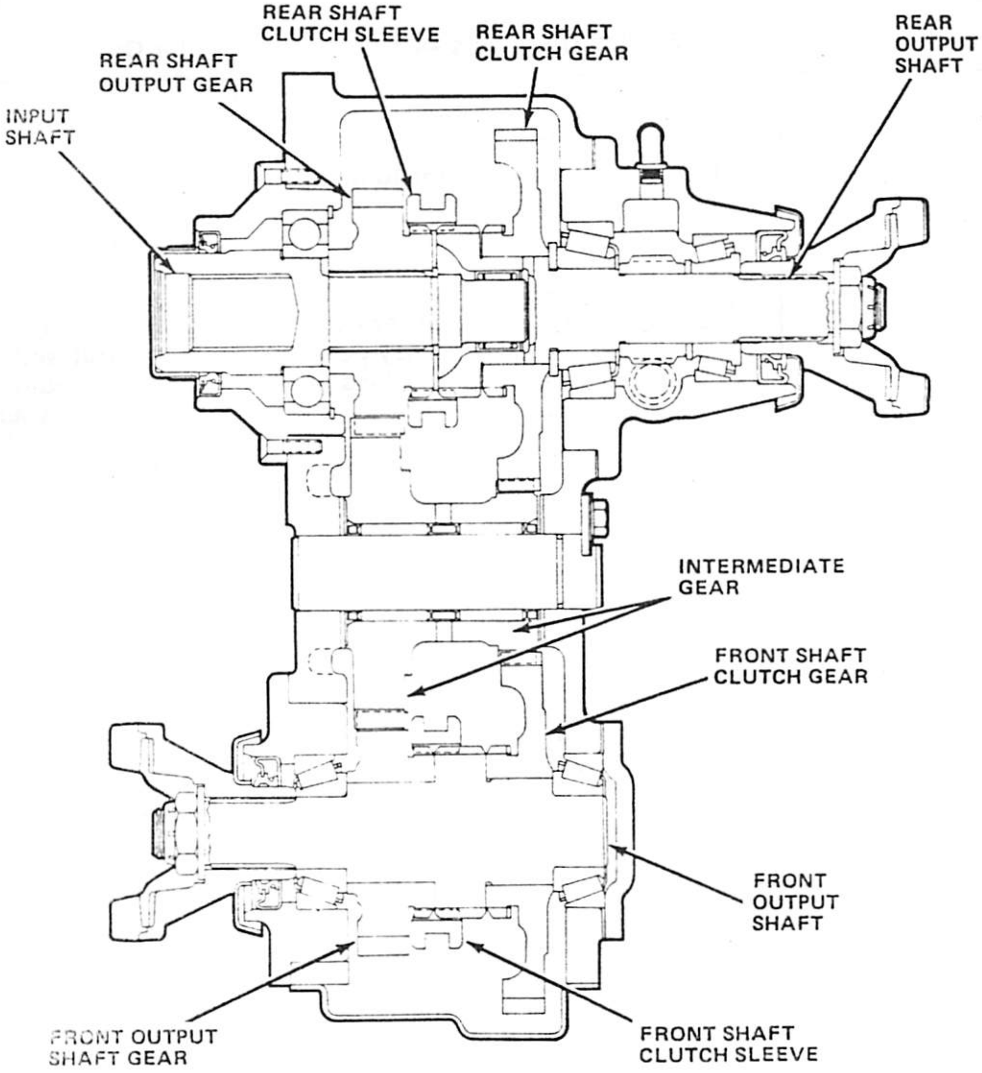

Fig. 2D-70 Power Flow—Model 300

(6) Remove oil seal using Tool J-25180 (fig. 2D-75).

(7) Install replacement seal using Tool J-25160.

(8) Install yoke, washer and nut. Tighten nut to 120 foot-pounds (163 N•m) torque. Use Tool J-8614-01 to hold yoke while tightening nut.

Rear Bearing Cap—Speedometer Drive Gear Service

Removal

(1) Disconnect rear propeller shaft at transfer case yoke. Tie shaft to frame with wire.

(2) Disconnect speedometer cable.

(3) Remove speedometer driven gear sleeve and driven gear.

(4) Remove transfer case vent hose.

(5) Remove output shaft yoke using Tools J-8614-01, -02, -03.

(6) Remove bearing cap-to-transfer case bolts and remove bearing cap.

NOTE: *The bearing cap has been coated with a sealant. Use a putty knife to break the seal, and work the knife around the bearing cap to loosen and remove it.*

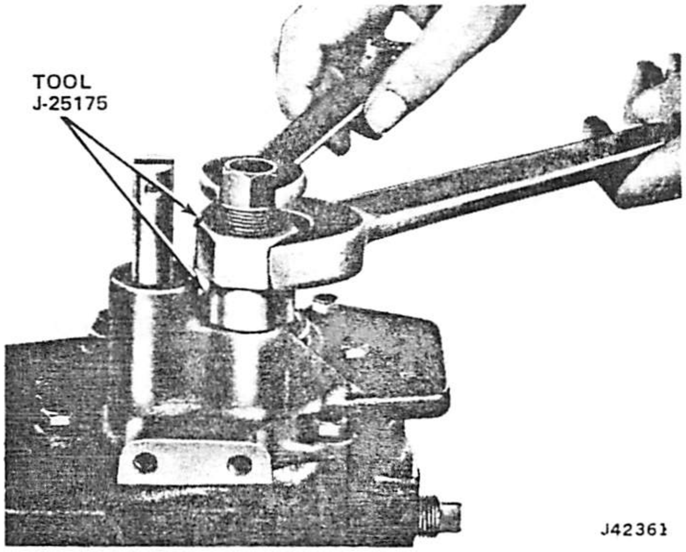

Fig. 2D-71 Shift Rod Oil Seal Removal

Service Diagnosis — Model 300 Transfer Case

Condition	Possible Cause	Correction
TRANSFER CASE DIFFICULT TO SHIFT OR WILL NOT SHIFT INTO DESIRED RANGE	(1) Vehicle speed too great to permit shifting.	(1) Stop vehicle and shift into desired range. Or reduce speed to 2-3 mph (3-4 km/h) before attempting to shift.
	(2) If vehicle was operated for extended period in 4H mode on dry paved surface, driveline torque load may cause difficult shifting.	(2) Stop vehicle, shift transmission to neutral, shift transfer case to 2H mode and operate vehicle in 2H on dry paved surfaces.
	(3) Transfer case external shift linkage binding.	(3) Lubricate or repair or replace linkage, or tighten loose components as necessary.
	(4) Insufficient or incorrect lubricant.	(4) Drain and refill to edge of fill hole with SAE 85W-90 gear lubricant only.
	(5) Internal components binding, worn, or damaged.	(5) Disassemble unit and replace worn or damaged components as necessary.
TRANSFER CASE NOISY IN ALL DRIVE MODES	(1) Insufficient or incorrect lubricant.	(1) Drain and refill to edge of fill hole with SAW 85W-90 gear lubricant only. Check for leaks and repair if necessary. Note: If unit is still noisy after drain and refill, disassembly and inspection may be required to locate source of noise.
NOISY IN — OR JUMPS OUT OF FOUR WHEEL DRIVE LOW RANGE	(1) Transfer case not completely engaged in 4L position.	(1) Stop vehicle, shift transfer case in Neutral, then shift back into 4L position.
	(2) Shift linkage loose or binding.	(2) Tighten, lubricate, or repair linkage as necessary.
	(3) Shift fork cracked, inserts worn, or fork is binding on shift rail.	(3) Disassemble unit and repair as necessary.

90770A

Condition	Possible Cause	Correction
LUBRICANT LEAKING FROM OUTPUT SHAFT SEALS OR FROM VENT	(1) Transfer case overfilled.	(1) Drain to correct level.
	(2) Vent closed or restricted.	(2) Clear or replace vent if necessary.
	(3) Output shaft seals damaged or installed incorrectly.	(3) Replace seals. Be sure seal lip faces interior of case when installed. Also be sure yoke seal surfaces are not scored or nicked. Remove scores, nicks with fine sandpaper or replace yoke(s) if necessary.
ABNORMAL TIRE WEAR	(1) Extended operation on dry hard surface (paved) roads in 4H range.	(1) Operate in 2H on hard surface (paved) roads.

90770B

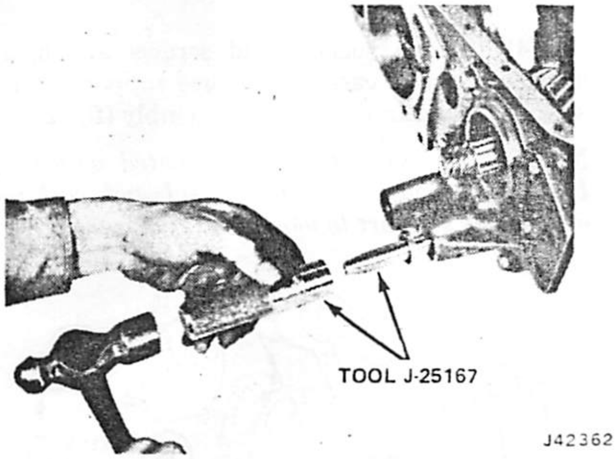

Fig. 2D-72 Shift Rod Oil Seal Installation

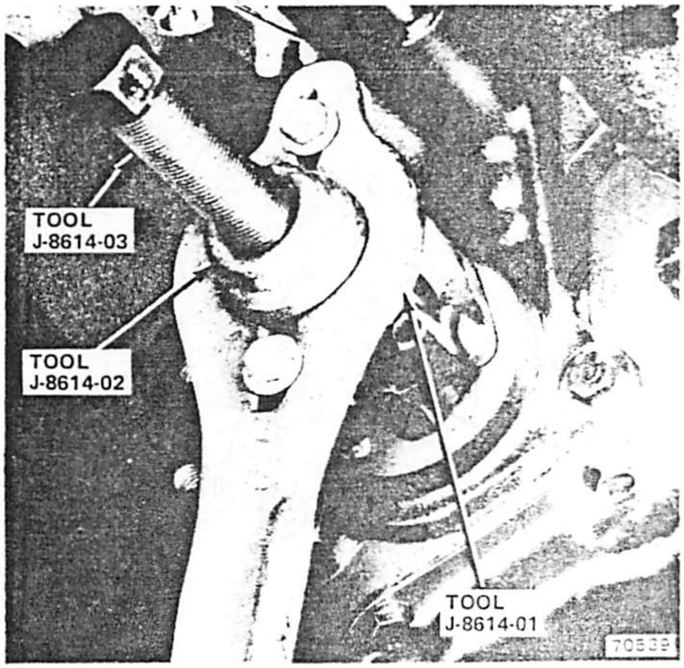

Fig. 2D-73 Output Shaft Yoke Nut Removal

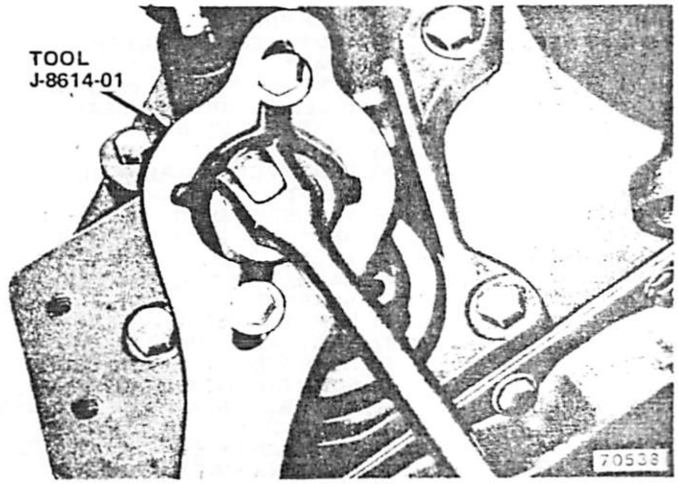

Fig. 2D-74 Yoke Removal

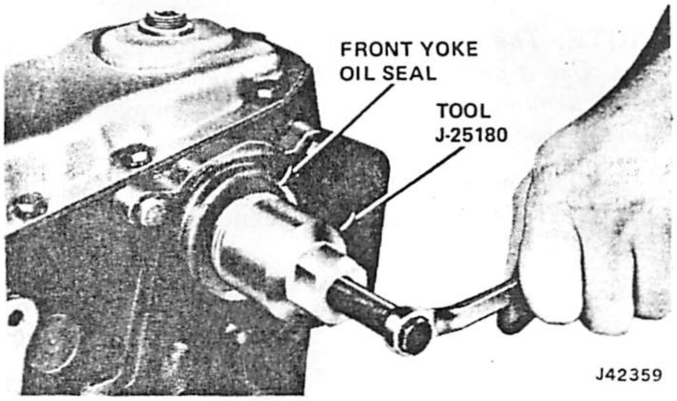

Fig. 2D-75 Yoke Oil Seal Removal

(7) Remove shims and speedometer drive gear from output shaft.

NOTE: *Keep the shims together for use in assembly.*

(8) Remove speedometer driven gear bushing from bearing cap, if necessary.

Installation

(1) Install speedometer driven gear bushing using Tool J-25169 if bushing was removed.

(2) Install speedometer drive gear and shims on shaft.

(3) Apply a bead of Loctite 515, or equivalent sealant, to mating surface of cap and install cap. Use two cap screws to align bolt holes. Use plastic mallet to tap cap into position.

(4) Tighten bearing cap bolts to 35 foot-pounds (47 N•m) torque.

(5) Install output shaft yoke and tighten locknut to 120 foot-pounds (163 N•m) torque. Use Tool J-8614-01 to hold yoke while tightening nut.

(6) Check rear output shaft end play as follows:

(a) Attach Dial Indicator J-8001 to bearing cap and position indicator stylus against output shaft.

(b) Pry output shaft back and forth to check end play. End play should be 0.001 to 0.005 inches (0.025 to 0.127 mm).

(c) If end play is not correct, remove or add shims between speedometer drive gear and output shaft rear bearing.

(7) Install transfer case vent hose.

(8) Install speedometer driven gear sleeve and driven gear.

(9) Install speedometer cable.

(10) Install rear propeller shaft. Tighten clamp strap bolts to 16 foot-pounds (21 N•m) torque.

DISASSEMBLY

(1) Remove shift lever assembly.

(2) Remove bottom cover (fig. 2D-76).

NOTE: *The bottom cover has been coated with a sealant. Use a putty knife to break the seal, and work the knife around the bottom cover to loosen and remove it. Do not wedge the cover off.*

(3) Remove front and rear yokes using Tool J-8614-01 (fig. 2D-74). Discard yoke locknuts.

(4) Remove socket head screws attaching input shaft support to case and remove support, rear output shaft gear and input shaft as assembly (fig. 2D-77).

NOTE: *The support has been coated with a sealant. Use a putty knife to break the seal, and work the knife around the support to loosen and remove it.*

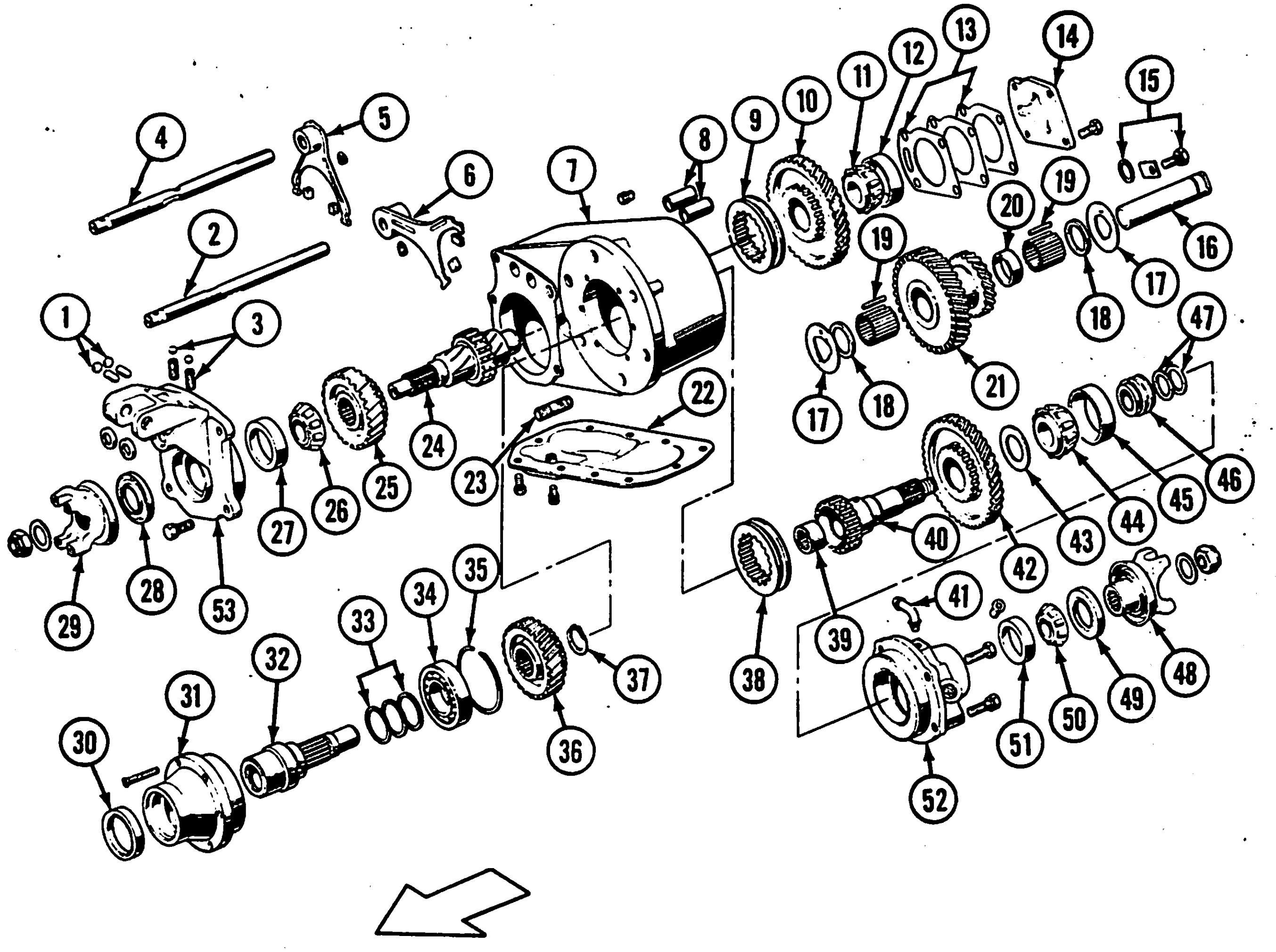

1. INTERLOCK PLUGS AND INTERLOCKS
2. SHIFT ROD – REAR OUTPUT SHAFT FORK
3. POPPET BALLS AND SPRINGS
4. SHIFT ROD – FRONT OUTPUT SHAFT FORK
5. FRONT OUTPUT SHAFT SHIFT FORK
6. REAR OUTPUT SHAFT SHIFT FORK
7. TRANSFER CASE
8. THIMBLE COVERS
9. CLUTCH SLEEVE – FRONT OUTPUT SHAFT
10. CLUTCH GEAR – FRONT OUTPUT SHAFT
11. BEARING – FRONT OUTPUT SHAFT REAR
12. RACE – FRONT OUTPUT SHAFT BEARING
13. END PLAY SHIMS – FRONT OUTPUT SHAFT
14. COVER PLATE
15. LOCK PLATE, BOLT AND WASHER
16. INTERMEDIATE GEAR SHAFT
17. THRUST WASHER
18. BEARING SPACER (THIN)
19. INTERMEDIATE GEAR SHAFT NEEDLE BEARINGS
20. BEARING SPACER (THICK)
21. INTERMEDIATE GEAR
22. BOTTOM COVER
23. STUD (CASE-TO-TRANS.)
24. FRONT OUTPUT SHAFT
25. FRONT OUTPUT SHAFT GEAR
26. FRONT OUTPUT SHAFT BEARING (FRONT)
27. FRONT OUTPUT SHAFT BEARING RACE
28. OIL SEAL
29. FRONT YOKE
30. SEAL
31. SUPPORT – INPUT SHAFT
32. INPUT SHAFT
33. SHIMS
34. INPUT SHAFT BEARING
35. INPUT SHAFT BEARING SNAP RING
36. REAR OUTPUT SHAFT GEAR
37. SNAP RING
38. CLUTCH SLEEVE – REAR OUTPUT SHAFT
39. INPUT SHAFT REAR BEARING (NEEDLE) (OR PILOT BEARING)
40. REAR OUTPUT SHAFT
41. VENT
42. CLUTCH GEAR – REAR OUTPUT SHAFT
43. THRUST WASHER
44. BEARING – REAR OUTPUT SHAFT FRONT
45. RACE – REAR OUTPUT SHAFT BEARING
46. SPEEDOMETER DRIVE GEAR
47. END PLAY SHIMS
48. REAR YOKE
49. REAR OUTPUT SHAFT OIL SEAL
50. BEARING – REAR OUTPUT SHAFT REAR
51. BEARING RACE
52. REAR BEARING CAP
53. FRONT BEARING CAP

Fig. 2D-76 Model 300 Transfer Case

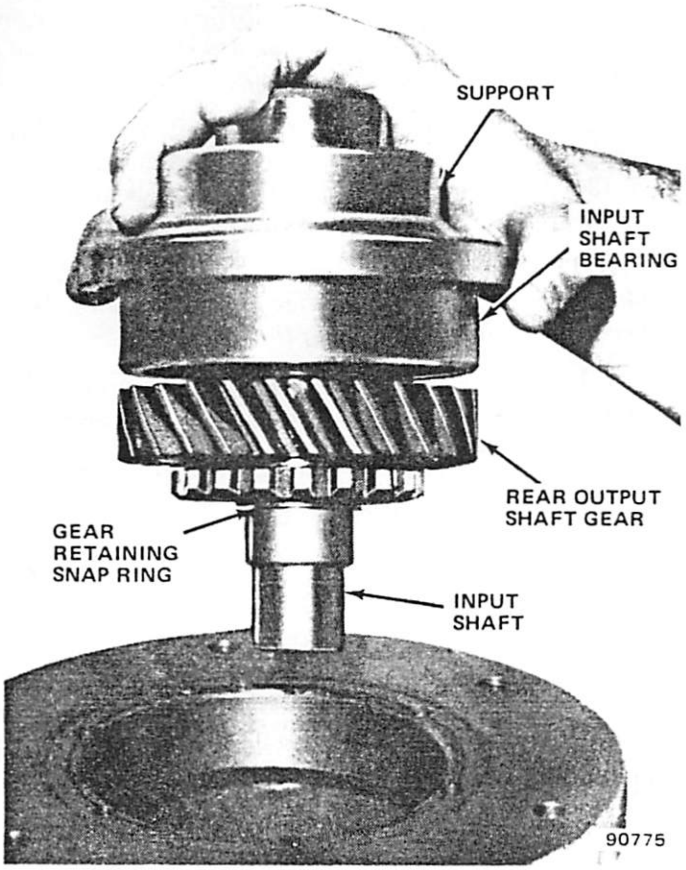

Fig. 2D-77 Front Support, Input Shaft and Rear Output Shaft Gear Removal/Installation

(5) Remove rear output shaft clutch sleeve from case.

(6) Remove and discard snap ring retaining rear output shaft gear on input shaft and remove gear.

(7) Remove and discard input shaft bearing snap ring.

(8) Remove input shaft and bearing from support. Tap end of input shaft with plastic mallet to aid removal.

(9) Remove input shaft bearing and end play shims from shaft using arbor press.

(10) Remove input shaft oil seal from support. Discard seal.

(11) Remove intermediate shaft lockplate bolt and lockplate (fig. 2D-76).

(12) Remove intermediate shaft. Tap shaft out of case using brass punch and plastic mallet.

(13) Remove and discard intermediate shaft O-ring seal.

(14) Remove intermediate gear assembly and thrust washers.

NOTE: *Thrust washers have locating tabs which must fit in notches in the case at assembly.*

(15) Remove needle bearings and bearing spacers from intermediate gear.

NOTE: *There are 48 needle bearings and three bearing spacers in the intermediate gear.*

(16) Remove rear bearing cap attaching bolts and remove cap. Use plastic mallet to tap on output shaft to aid cap removal.

NOTE: *The rear bearing cap has been coated with a sealant. Use a putty knife to break the seal, and work the knife around the cap to loosen and remove it.*

(17) Remove end play shims and speedometer drive gear from rear output shaft (fig. 2D-76).

(18) Remove and discard rear output shaft oil seal. Remove bearings and bearing races from rear bearing cap.

(19) Remove setscrews retaining front and rear output shaft shift forks on shift rods (fig. 2D-78).

(20) Remove shift rods. Insert punch through clevis pin holes in rods and rotate rods while pulling them out of case.

NOTE: *When the shift rods are free of the front cap take care to avoid losing the shift rod poppet balls and springs.*

(21) Remove shift forks from case.

(22) Remove bolts attaching front cap-to-case and remove front cap.

NOTE: *The front cap has been coated with a sealant. Use a putty knife to break the seal, and work the knife around the cap to loosen and remove it.*

(23) Remove front output shaft and shift rod oil seals from front cap (fig. 2D-76). Discard seals.

(24) Remove front bearing race from front bearing cap using Tool J-29168.

Fig. 2D-78 Shift Fork Setscrew Removal/Installation

(25) Remove cover plate bolts and remove plate and end play shims from case (fig. 2D-79). Keep shims together for assembly.

(26) Move front output shaft toward front of case.

(27) Remove front output shaft rear bearing race from case (fig. 2D-79).

(28) Remove rear output shaft front bearing. Position case on wood blocks. Seat clutch gear on case interior surface and tap shaft out of bearing using rawhide mallet (fig. 2D-80).

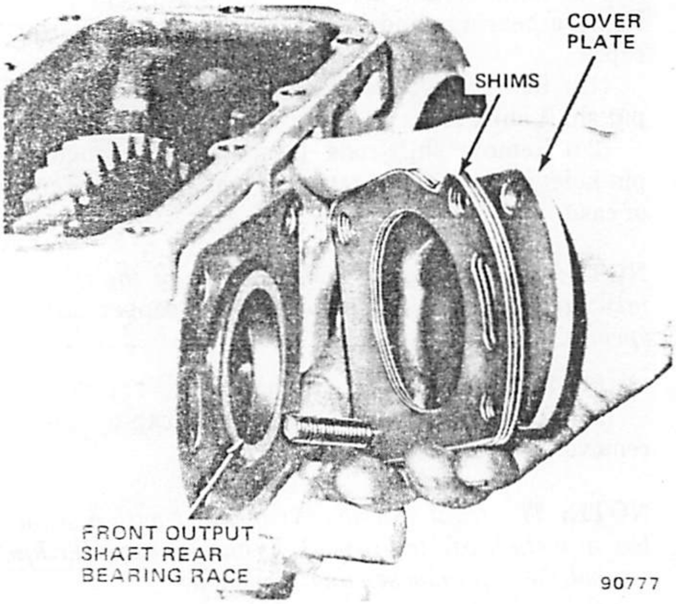

Fig. 2D-79 Cover Plate, Shims and Front Output Shaft Rear Bearing Race

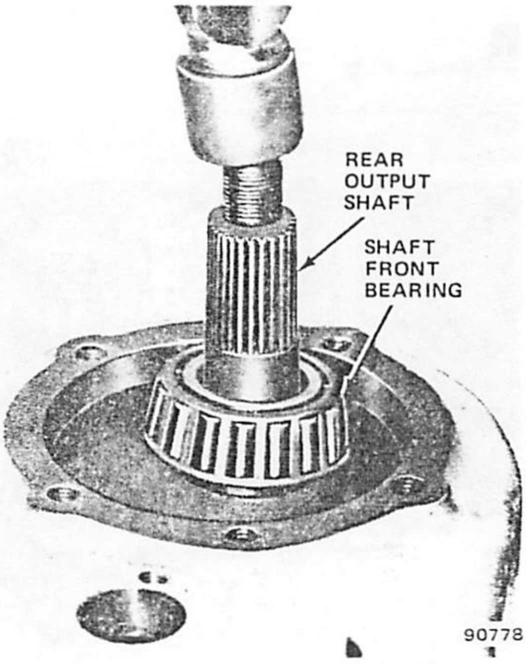

Fig. 2D-80 Rear Output Shaft Front Bearing Removal

NOTE: *If the bearing proves difficult to remove, remove it using an arbor press and a suitable press tool to press the shaft out of the bearing.*

(29) Remove rear output shaft front bearing, thrust washer, clutch gear and output shaft from case.

(30) Remove front output shaft rear bearing using arbor press and suitable press Tool (fig. 2D-81).

CAUTION: *Be sure to support the case with wood blocks positioned at either side of the case bore. This is necessary to avoid damaging the case.*

(31) Remove transfer case from arbor press and remove front output shaft, clutch gear and sleeve and shaft rear bearing from case.

(32) Remove front output shaft front bearing using Tool J-22912-01 and arbor press.

(33) Remove front output shaft gear from shaft.

(34) Remove input shaft rear needle bearing from rear output shaft using Tool J-29369-1. Support output shaft in vise during bearing removal.

(35) Remove shift rod thimbles. Use 3/8 drive, 7/16 socket and extension to tap shift rod thimbles out of case.

CLEANING AND INSPECTION

Clean the case and all components in solvent. Remove

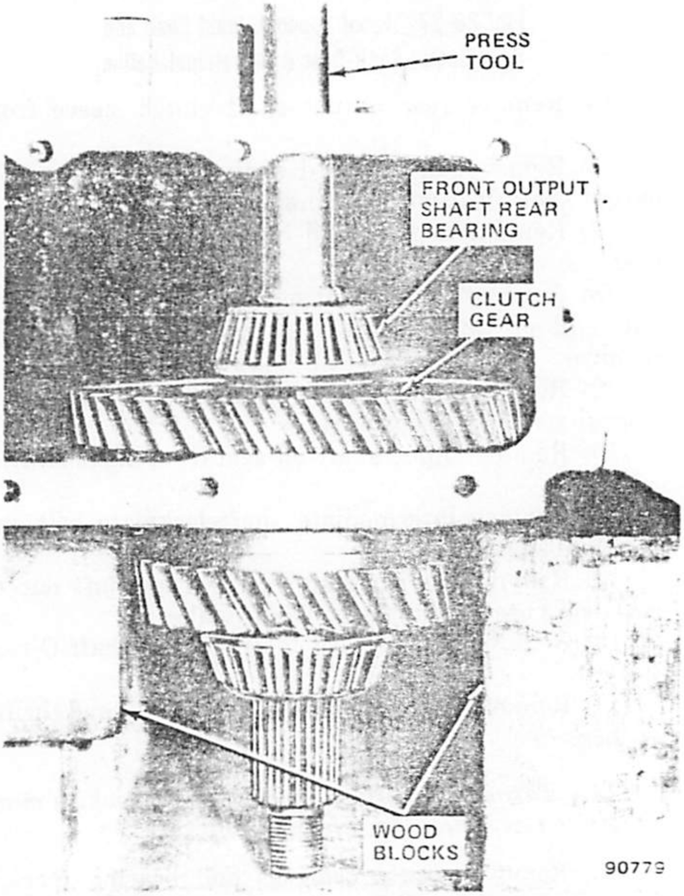

Fig. 2D-81 Front Output Shaft Rear Bearing Removal all old sealing material from the case and bearing cap mating surfaces. Dry all components except the bearings, using compressed air. Use caution when cleaning the case mating surfaces. Do not scratch or mar these surfaces in any way. However, minor surface irregularities can be removed with sandpaper. Do not dry any bearings with compressed air. Use clean shop towels only.

Inspect all parts for signs of excessive wear or damage. Replace gears that are cracked, chipped broken or excessively worn. Replace any bearings that are worn, pitted, scored, flat-spotted, or brinelled. Replace any shaft that has damaged splines, threads or bearing surfaces. Check the shift rods and rod bores in the case for wear or damage. Minor scratches or nicks on the rods may be cleaned up using crocus cloth.

ASSEMBLY

(1) Install shift rod thimbles. Apply Loctite 220, or equivalent sealant, to thimbles before installation.

(2) Install front output shaft gear on front output shaft. Be sure clutch teeth on gear face shaft gear teeth.

(3) Install front bearing on front output shaft using arbor press and suitable press tool. Be sure bearing is seated against gear.

(4) Install front output shaft in case and install clutch sleeve and clutch gear on shaft.

(5) Install front output shaft rear bearing using arbor press and suitable press tool (fig. 2D-82).

NOTE: *Install an old yoke nut on the shaft to avoid damaging the threads.*

(6) Install input shaft rear needle bearing in rear output shaft using Tool J-29179.

(7) Position rear output shaft clutch gear in case and insert rear output shaft into gear.

(8) Install thrust washer and front bearing on rear output shaft using arbor press and suitable press tool.

(9) Install shims and bearing on input shaft using arbor press and suitable press tool.

(10) Install new input shaft oil seal in input shaft support using Tool J-29184.

(11) Install input shaft and bearing in support and install new bearing snap ring.

(12) Install rear output shaft gear on input gear and install new gear retaining snap ring (fig. 2D-77).

(13) Measure clearance between input gear and gear retaining snap ring using feeler gauge. Clearance should not exceed 0.003 inches (0.076 mm). If clearance is over tolerance, disassemble input shaft and add shims between input shaft and shaft bearing (fig. 2D-76).

(14) Install clutch sleeve on rear output shaft.

(15) Apply Loctite 515, or equivalent sealant, to mating surface of input shaft support and install assembled support, shaft and gear in case. Use two support bolts to align support on case and tap support into position using plastic mallet.

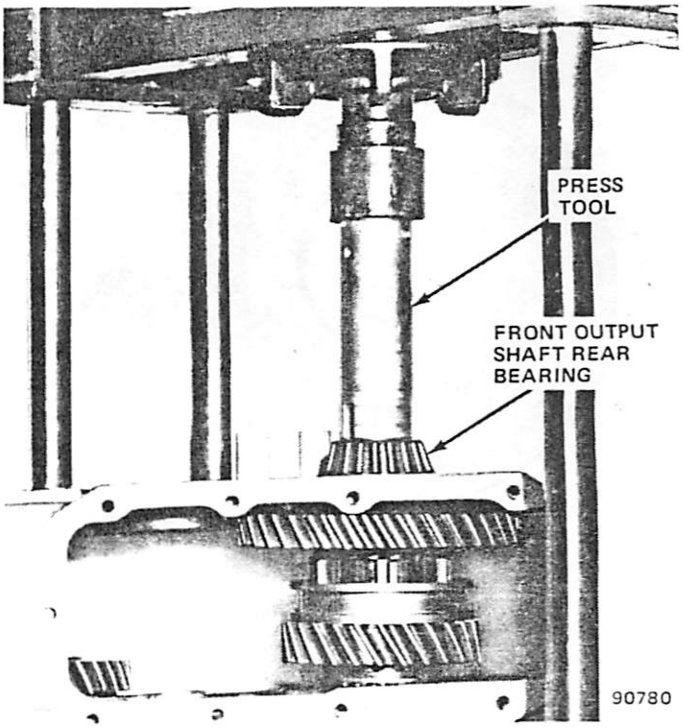

Fig. 2D-82 Front Output Shaft Rear Bearing Installation

(16) Install and tighten socket head screws in support to 10 foot-pounds (14 N•m) torque.

(17) Install rear bearing cap front bearing race using Tool J-9276-3.

(18) Install rear bearing cap rear bearing race using Tool J-29182.

(19) Position rear output shaft rear bearing in rear bearing cap.

(20) Install rear output shaft yoke oil seal using Tool J-25160.

(21) Install speedometer gear and end play shims on rear output shaft.

(22) Install rear bearing cap. Apply Loctite 515, or equivalent sealant, to mating surface of cap. Use two cap bolts to align bolt holes and tap rear cap into place using plastic mallet.

(23) Install and tighten rear bearing cap bolts to 35 foot-pounds (47 N•m) torque.

(24) Install rear output shaft yoke. Tighten new locknut to 120 foot-pounds (163 N•m) torque. Use Tool J-8614-01 to hold yoke while tightening nut.

(25) Check rear output shaft end play as follows:

(a) Clamp Dial Indicator J-8001 onto bearing cap. Position indicator stylus so it contacts end of shaft (fig. 2D-83).

(b) Pry output shaft back and forth to check end play. End play should be 0.001 to 0.005 inches (0.025 to 0.127 mm).

(c) If end play is not correct, remove or add shims between speedometer drive gear and output shaft rear bearing (fig. 2D-76).

(26) Install front output shaft rear bearing race (fig. 2D-79).

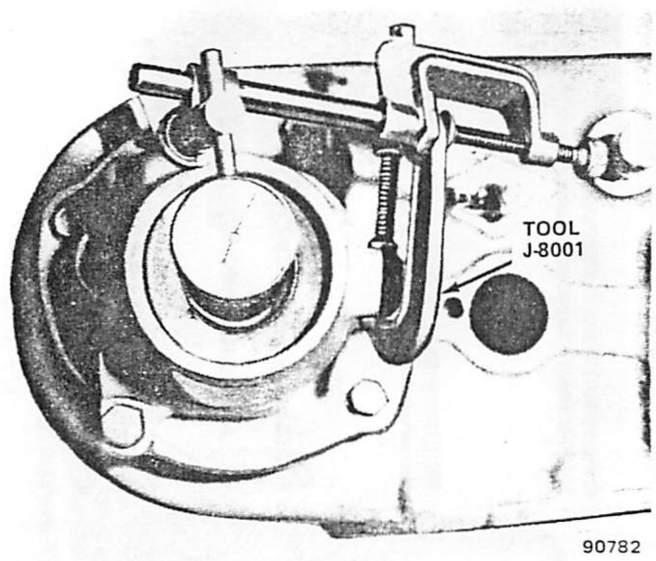

Fig. 2D-83 Checking Rear Output Shaft End Play

(27) Install front output shaft end, play shims and cover plate (fig. 2D-79). Tighten cover plate bolts to 35 foot-pounds (47 N•m) torque.

NOTE: *Apply Loctite 220, or equivalent sealant, to bolt threads before installation.*

(28) Install front output shaft front bearing race using Tools J-8092 and J-29181 (fig. 2D-84).

(29) Install front output shaft yoke oil seal using Tool J-25160.

(30) Install shift rod oil seals using Tool J-25167 (fig. 2D-72).

(31) Install front bearing cap. Apply Loctite 515, or equivalent sealant, to mating surface of cap before installation. Use two bolts to align cap and case bolt holes and tap cap into position on case using plastic mallet.

(32) Install and tighten bearing cap bolts to 35 foot-pounds (47 N•m) torque.

(33) Check front output shaft end play as follows:

(a) Seat rear bearing cup against cover plate by tapping end of front output shaft with plastic mallet.

(b) Mount dial indicator on front bearing cap and position indicator stylus against end of output shaft.

(c) Pry shaft back and forth to check end play. End play should be 0.001 to 0.005 inches (0.025 to 0.129 mm).

(d) If end play is not correct, remove or add shims between cover plate and case. If shims are added, seat rear bearing cup as outlined in step (a) before checking end play again.

(34) Install front output shaft yoke. Tighten new locknut to 120 foot-pounds (163 N•m) torque. Use Tool J-8614-01 to hold yoke while tightening nut.

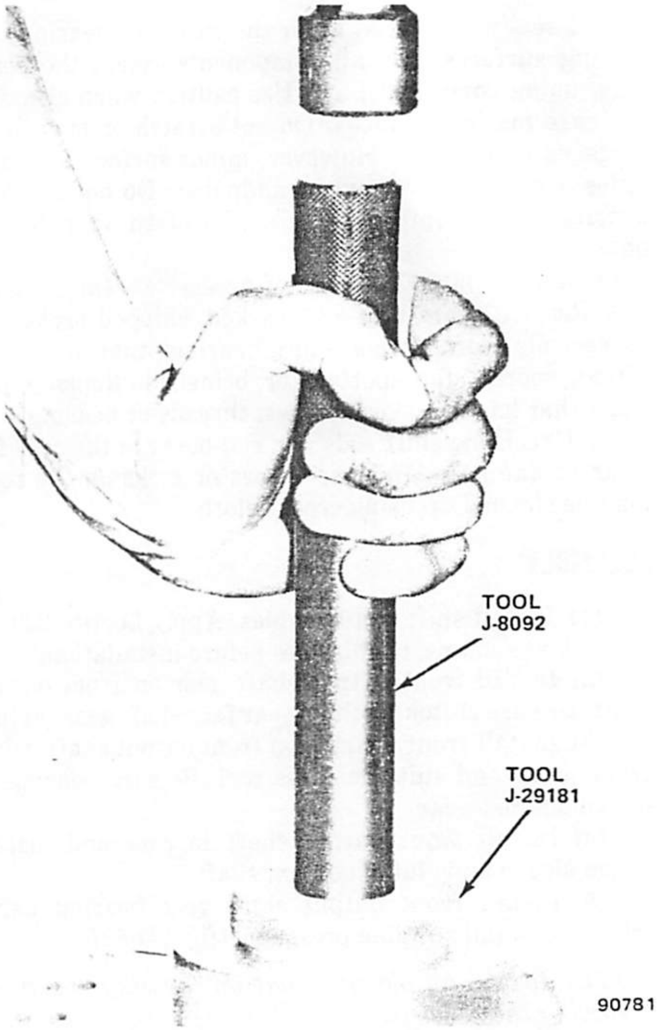

Fig. 2D-84 Front Output Shaft Front Bearing Race Installation

(35) Insert front and rear output shaft shift forks into case (fig. 2D-85).

(36) Install front output shaft shift rod poppet ball and spring in front bearing cap.

(37) Compress poppet ball and spring and install front output shaft shift rod part way in case.

(38) Insert front output shaft shift rod through shift fork.

(39) Align setscrew hole in shift fork and rod. Install and tighten setscrew to 14 foot-pounds (19 N•m) torque.

(40) Install rear output shaft shift rod poppet ball and spring in front bearing cap.

(41) Compress ball and spring and install rear output shaft shift rail part way in case.

NOTE: *Before installing the shift rail, be sure the front output shaft shift rod is in Neutral and that the interlocks are seated in the front bearing cap bore.*

(42) Insert rear output shaft shift rod through shift fork.

(43) Align setscrew holes in fork and rod. Install and tighten setscrew to 14 foot-pounds (19 N•m) torque.

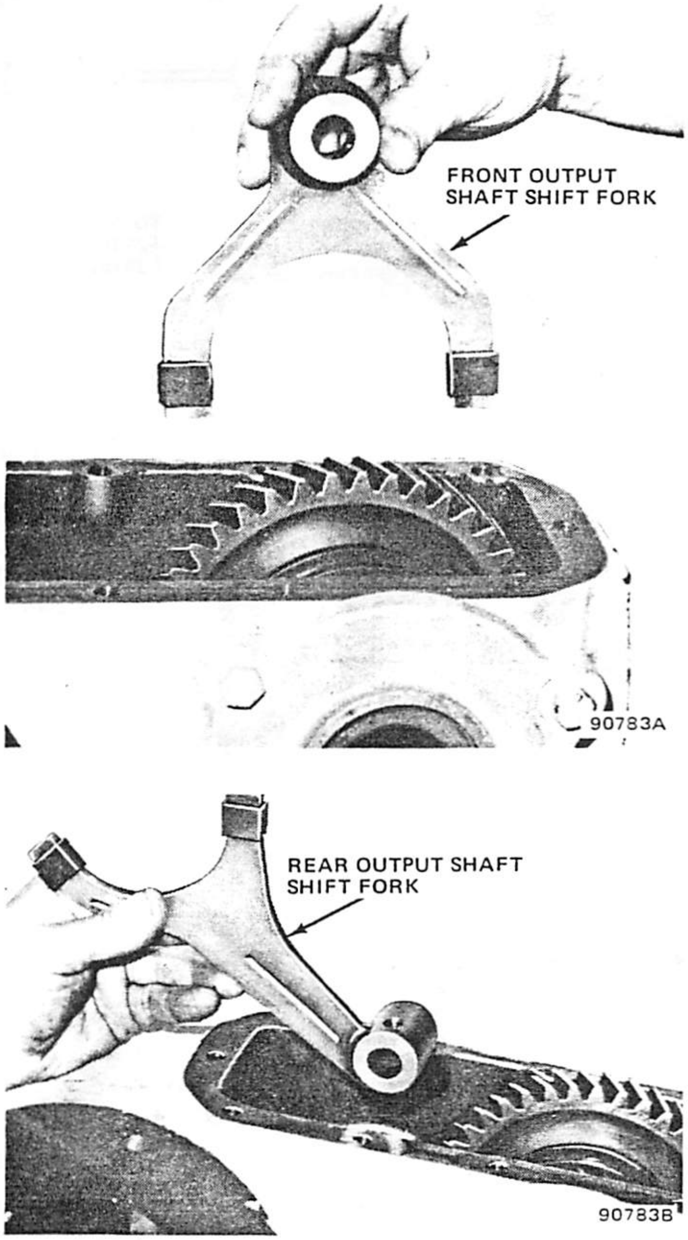

Fig. 2D-85 Shift Fork Installation

(44) Insert Tool J-25142 in intermediate gear and install needle bearings and spacers in gear.

(45) Install intermediate gear thrust washers in case. Be sure washer tangs are aligned with grooves in case.

NOTE: *The thrust washers can be held in place with petroleum jelly.*

(46) Install new O-ring seal on intermediate shaft.

(47) Position intermediate gear in case.

(48) Install intermediate shaft in case bore. Tap shaft into gear until shaft forces Tool J-25142 out of case. Use plastic mallet to tap shaft into place.

(49) Install intermediate shaft lockplate and bolt. Tighten bolt to 23 foot-pounds (31 N•m) torque.

(50) Install bottom cover and replacement gasket. Apply Loctite 515, or equivalent sealant, to mating surface of cover. Install and tighten cover bolts to 15 foot-pounds (20 N•m) torque.

SPECIFICATIONS

Specifications—Model 300 Transfer Case

Transfer Case Type	4 position, dual range part time 4 wheel drive unit with integral low range
Torque Transmittal Mode	Constant mesh gearbox with layshaft gear arrangement.
Low Range Reduction Ratio	2.6:1 gear reduction
Drive Positions and Shift Controls	2H, 4H, 4L and Neutral. Ranges selected via floor mounted shift lever. 4H and 4L ranges are undifferentiated
Case Configuration	One piece cast iron with aluminum front/rear bearing caps
Lubricant Capacity and Type	4 pints (1.9 liters) SAE 85W-90 gear lubricant API grade GL-5

90784

Torque Specifications

Service Set-To Torques should be used when assembling components. Service In-Use Recheck Torques should be used for checking a pre-tightened item.

	USA (ft-lbs)		Metric (N·m)	
	Service Set-To Torque	Service In-Use Recheck Torque	Service Set-To Torque	Service In-Use Recheck Torque
Bottom Cover Bolts	15	10-20	20	14-27
Cover Plate Bolts	35	25-40	47	34-54
Front Bearing Cap Bolts	35	25-40	47	34-54
Front/Rear Yoke Locknuts	120	120-150	163	163-203
Input Shaft Support Screws	10	7-10	14	9-14
Lockplate Bolt	23	20-25	31	27-34
Shift Fork Setscrews	14	12-18	19	16-24

All torque values given in foot-pounds and newton-meters with dry fits unless otherwise specified.

90785

Tools

TOOL
J-29181

TOOL
J-29163

TOOL
J-29174

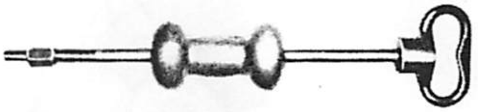

TOOL
J-2619-01

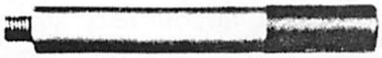

TOOL
J-8092

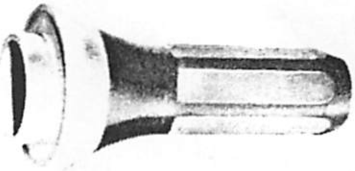

TOOL
J-29184 or
J-29162

TOOL
J-29170

TOOL
J-9276-3

TOOL
J-29179

TOOL
J-29169

TOOL
J-8614-03

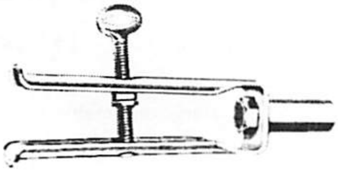

TOOL
J-26941

TOOL
J-25167

TOOL
J-29185

TOOL
J-29185-2

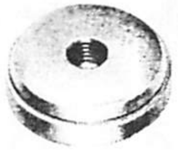

TOOL
J-7818

TOOL
J-29168

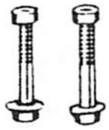

TOOL
J-25167

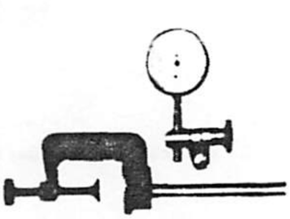

TOOL
J-8001

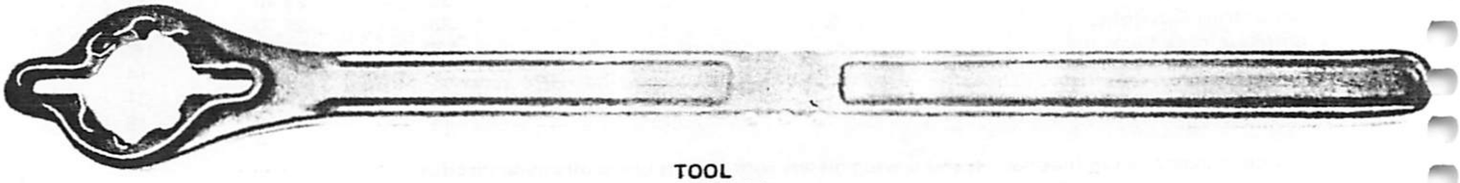

TOOL
J-8614-01

PROPELLER SHAFT 2E

SECTION INDEX

GENERAL

Jeep vehicles use tubular propeller shafts to transmit engine torque from the transfer case to the front and rear axles. Universal joints connect each shaft to the transfer case and axle yokes. A splined slip yoke is used at one end of each propeller shaft to compensate for variations in shaft length caused by suspension spring movement.

Because of the various driveline combinations available on Jeep vehicles, several different propeller shaft and universal joint designs are required.

Propeller Shaft Application

The front propeller shaft on Cherokee, Wagoneer and Truck models is connected to the axle yoke with a single cardan universal joint and to the transfer case yoke with a double cardan universal joint (fig. 2E-1).

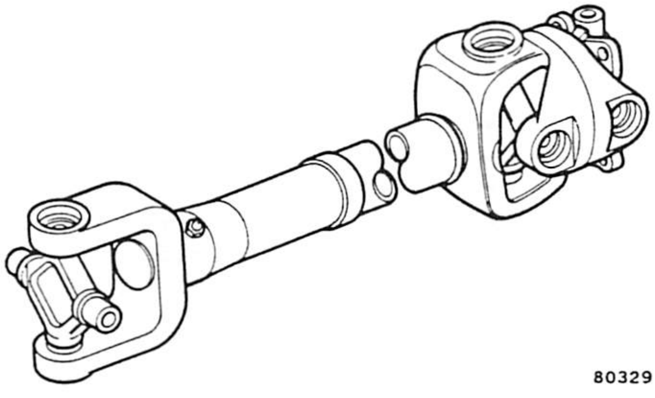

Fig. 2E-1 Front Propeller Shaft Assembly—Cherokee, Wagoneer and Truck Models

The front propeller shaft on CJ and Scrambler is connected to both the axle and transfer case with single cardan universal joints. A slip yoke at the axle end of the shaft (fig. 2E-2).

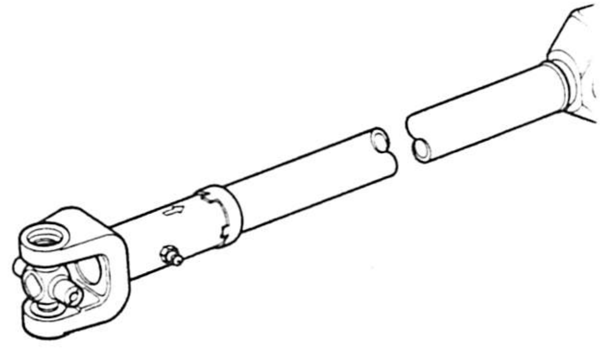

Fig. 2E-2 Front Propeller Shaft Assembly—CJ and Scrambler Models

The rear propeller shaft on Cherokee, Wagone Truck models is connected to both the axle and tr case yokes with single cardan universal joints. yoke is used at the transfer case end of the shaft (f 3).

The rear propeller shaft on CJ and Scrambler is similar to the front shaft in appearance and con tion. Single cardan universal joints connect the sh both the axle and transfer case yokes and the slip located at the transfer case end of the shaft.

Universal Joint Application

Two different design universal joints are used f various driveline combinations: a single cardan joi a double cardan joint.

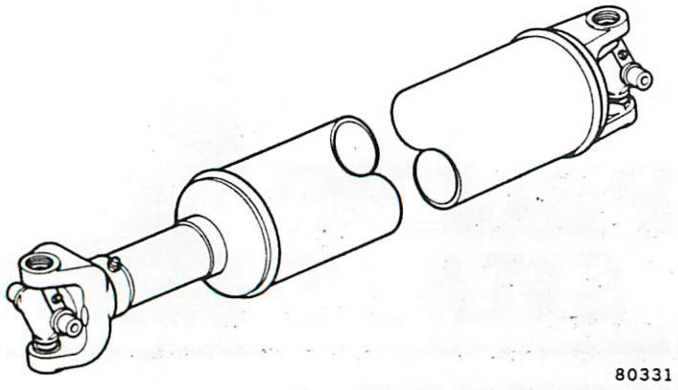

Fig. 2E-3 Rear Propeller Shaft Assembly—Cherokee, Wagoneer and Truck Models

The single cardan joint is used for most applications and consists of a single spider with four sets of needle bearings, and four bearing seals, bearing caps, and bearing cap retainers (fig. 2E-4). Clamp straps are used to attach the joint to the axle and transfer case yokes.

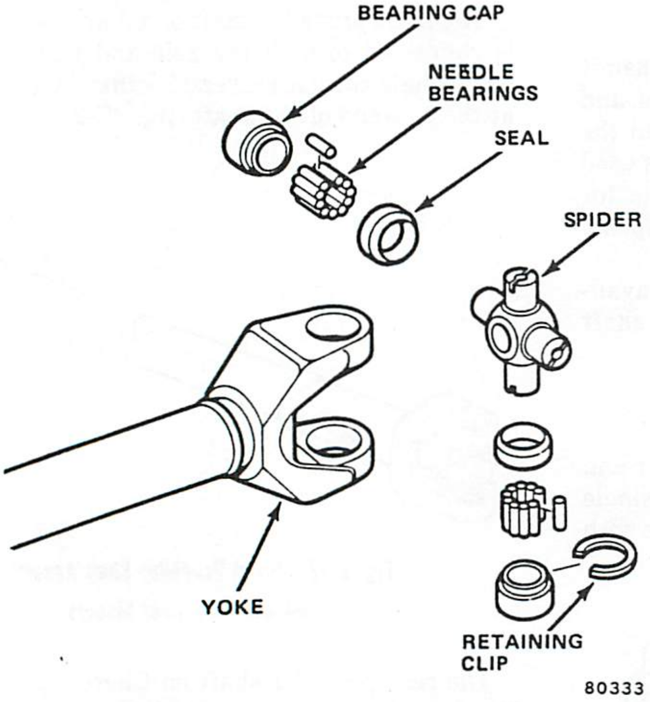

Fig. 2E-4 Single Cardan Universal Joint

The double cardan joint, also referred to as a constant velocity joint, consists of two spiders, a socket ball, a link yoke, a socket spring and dust seal, a socket yoke, and needle bearings, bearing seals, bearing caps and bearing retainers for each spider (fig. 2E-5). The double cardan joint is used for front propeller shaft-to-transfer case yoke applications on all Cherokee, Wagoneer and Truck models.

DRIVELINE VIBRATION

Driveline vibration can be divided into two categories: mechanical or audible. Mechanical vibrations produce visible motion in the fenders, rear view mirror, instrument panel or steering wheel, or can be felt through the seats, floorpan or steering wheel. Audible vibrations are heard or sensed above normal road and background noise and may be accompanied by mechanical vibration. In some cases, audible vibration occurs as a droning or drumming noise while in other cases, it produces a buffeting sensation that is felt or sensed by the driver rather than heard.

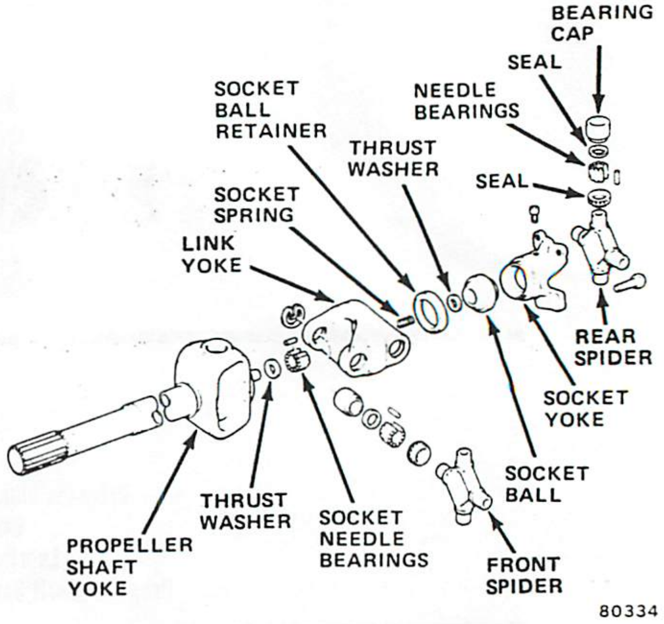

Fig. 2E-5 Double Cardan Universal Joint

Driveline vibration may be caused by the front or rear propeller shafts, axle or transfer case yokes, universal joints, incorrect front or rear pinion angles, loose engine-transmission-transfer case mountings or engine driven accessories. Mechanical vibration is usually caused by a damaged or worn driveline component. Audible vibrations are usually caused by an incorrect universal joint angle or binding universal joints and are most noticeable in the 40 to 60 mph (64 to 97 km/h) speed range.

Vibration caused by a propeller shaft may be the result of:

- Undercoating on the shaft tube
- Excessive shaft runout
- Cracked or broken shaft seam welds
- Dented, bent or twisted shaft tube
- Worn or damaged shaft bearing yokes
- Loose universal joint clamp strap bolts
- Tight, loose or binding slip yoke
- Tight, worn, binding or damaged universal joint
- Loose yoke retaining nut

Vibration caused by universal joints may be the result of:

- Loose clamp strap bolts
- Tight, loose, binding or worn slip yoke
- Worn or damaged universal joint spider
- Worn or damaged needle bearings or bearing caps

Vibration caused by axle, transfer case, engine or suspension components may be the result of:

- Loose yoke retaining nut
- Excessive yoke runout
- Incorrect universal joint angle
- Bent, worn, broken, or loose torque reaction bracket or engine rear crossmember
- Damaged or loose suspension springs or suspension components
- Loose engine or transmission/transfer case support cushions or crossmembers, broken spring mounting pad (on axle), broken spring center bolt, or damaged engine driven accessories or drive belts.

Driveline Vibration Diagnosis

If a driveline vibration condition should develop, do not initiate corrective procedures until the vibration source has been determined. This is important in avoiding unnecessary or ineffective repairs. The following Diagnosis and Repair (DARS) Charts will help to isolate the most common causes of driveline vibration:

Driveline Vibration Diagnosis and Repair (DARS) Charts

Note: Refer to Chapter A – General Information for details on how to use this DARS chart.

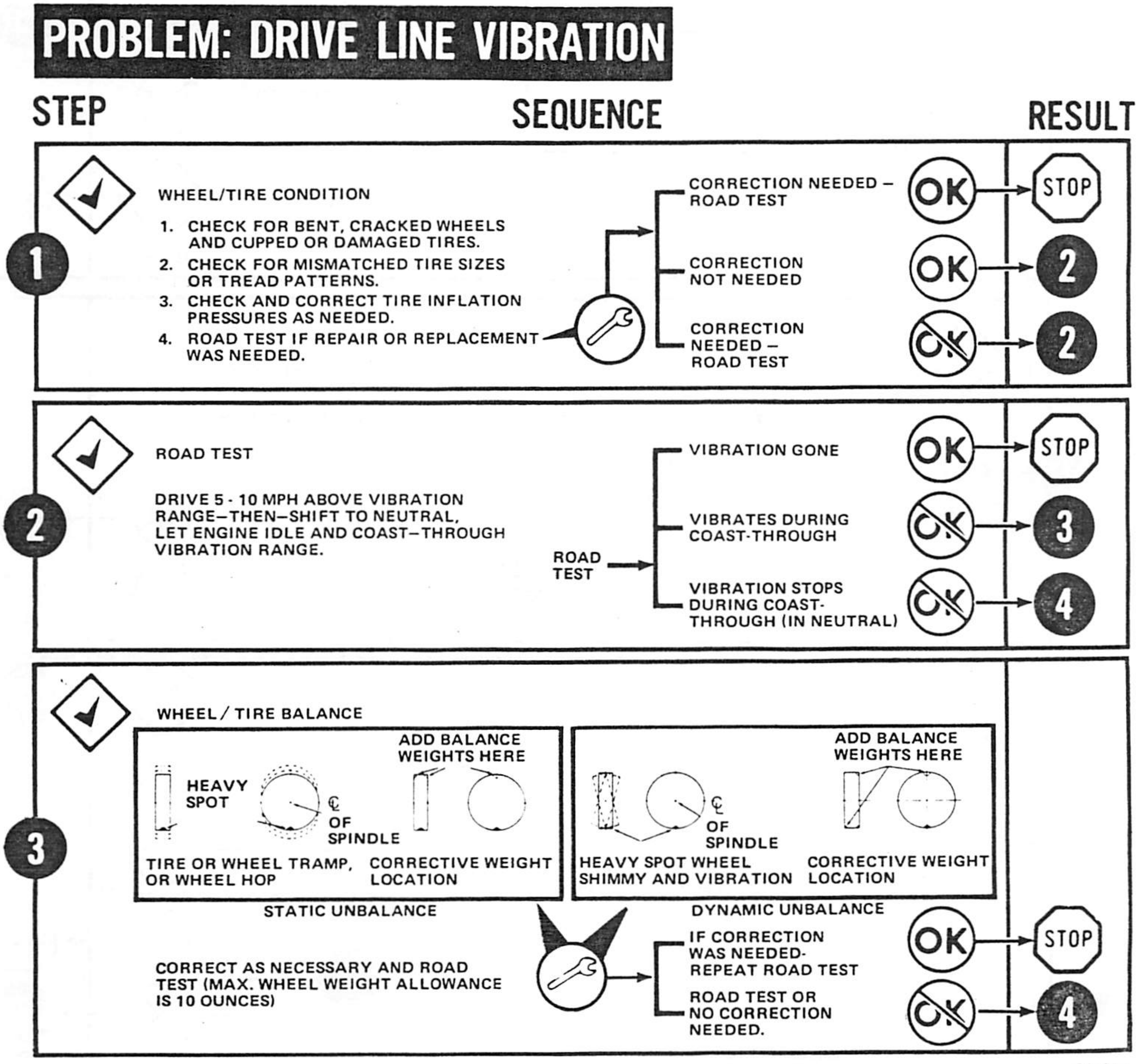

STEP **SEQUENCE** **RESULT**

4

✓ CHECK TIRE RUNOUT

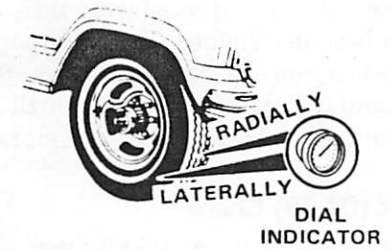

✓ CHECK WHEEL RUNOUT

TIRE RADIAL RUNOUT:
RADIAL TIRES _ _ _ _ _ _ _ 0.080
CONVENTIONAL TIRES _ _ 0.105

TIRE LATERAL RUNOUT:
ALL TIRES _ _ _ _ _ _ _ _ 0.100

WHEEL RUNOUT:
LATERAL/RADIAL _ _ _ _ _ 0.045

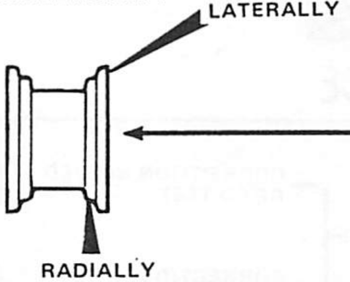

NO CORRECTION NEEDED — OK → 5

CORRECTION NEEDED — ~~OK~~

REPAIR OR REPLACE AS NECESSARY → 2

ROAD TEST

5

✓ CHECK FRONT PROPELLER SHAFT OPERATION

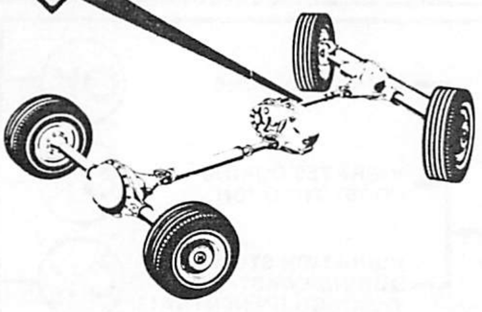

1. REMOVE REAR PROPELLER SHAFT (ALIGN MARK SHAFT AND AXLE YOKE FOR ASSEMBLY REFERENCE.
2. ROAD TEST WITH QUADRA-TRAC IN 4H-LOCK. ROAD TEST MODELS 208 AND 300 IN 4-H.

ROAD TEST 2 →
- VIBRATION GONE OR NOTICEABLY REDUCED — OK → 6
- NO CHANGE IN VIBRATION LEVEL — ~~OK~~ → 10

6

✓ CHECK REAR PROPELLER SHAFT CONDITION

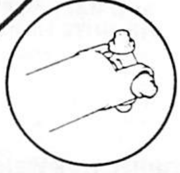
WORN, BINDING BRINELLED U-JOINTS

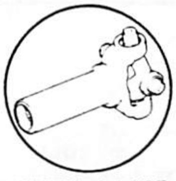
WORN, LOOSE BINDING SLIP YOKE

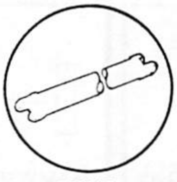
BENT TUBE


EXCESSIVE PAINT OR UNDERCOATING ON TUBE

OK → 7

~~OK~~

REPAIR OR REPLACE SHAFT

ROAD TEST 2 →
- OK → STOP
- ~~OK~~ → 7

80787

STEP **SEQUENCE** **RESULT**

7

✓ CHECK FRONT AXLE PINION AND TRANSFER CASE YOKE RUNOUT USING TOOL J-24649-1

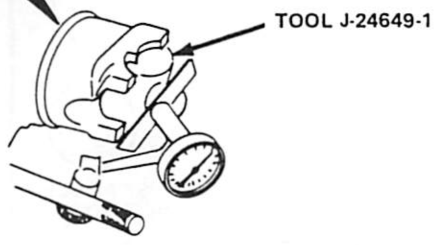

MAXIMUM ALLOWABLE RUNOUT AT EITHER YOKE IS 0.006 (0.15 mm)

OK → 8

NOT OK → 🔧

IF RUNOUT IS 0.007 OR MORE, REINDEX YOKE, AND RECHECK RUNOUT. REPLACE YOKE IF REINDEXING DOES NOT CORRECT RUNOUT.* REINSTALL PROP SHAFT.

ROAD TEST 2 → OK → STOP

ROAD TEST 2 → NOT OK → 8

*REPLACEMENT YOKE RUNOUT SHOULD BE CHECKED ALSO.

8

✓ CHECK REAR PROPELLER SHAFT RUNOUT USING DIAL INDICATOR.

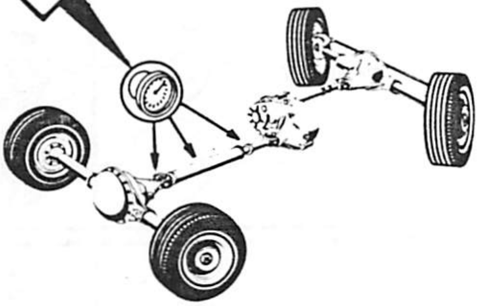

MAXIMUM ALLOWABLE RUNOUT OF SHAFT IS .015 (INCHES) TOTAL INDICATOR RUNOUT AT ENDS AND CENTER OF SHAFT. AT SHAFT ENDS, MEASURE RUNOUT 3 INCHES FROM SHAFT WELD SEAMS.

OK → 9

NOT OK → REINDEX SHAFT 180° AND RECHECK RUNOUT.

OK → ROAD TEST

NOT OK → 🔧 REPLACE SHAFT → ROAD TEST

ROAD TEST 2 → OK → STOP

ROAD TEST 2 → NOT OK → 9

80787C

STEP **SEQUENCE** **RESULT**

9

✓ CHECK REAR AXLE PINION UPWARD ANGLE AND ENGINE DOWNWARD ANGLE USING MAGNETIC BASE PROTECTOR

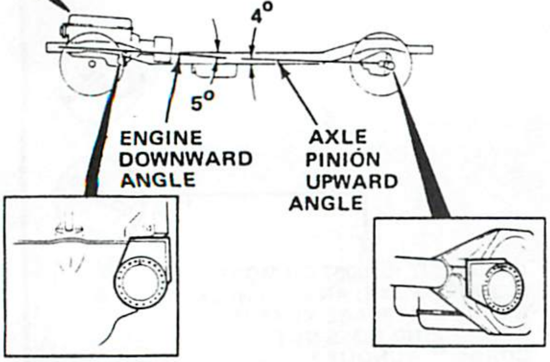

REAR AXLE PINION ANGLE MUST BE ½° TO 1½° (1° PREFERRED) BELOW ENGINE ANGLE. USE APPROPRIATE SHIMS TO CORRECT ANGLE

OK → **10**

~~OK~~ → ADJUST ANGLES AS NEEDED

ROAD TEST **2** → OK → STOP

~~OK~~ → **10**

10

✓ CHECK REAR PROPELLER SHAFT OPERATION

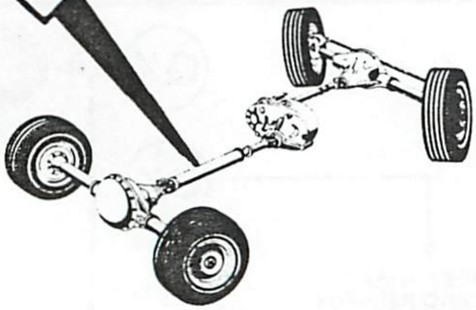

1. REMOVE FRONT PROPELLER SHAFT (ALIGN MARK SHAFT AND AXLE YOKES FOR ASSEMBLY REFERENCE).
2. ROAD TEST WITH QUADRA-TRAC IN 4H-LOCK AND MODELS 208 AND 300 IN 4H.

ROAD TEST **2**

VIBRATION GONE OR NOTICEABLY REDUCED — OK → **11**

NO CHANGE IN VIBRATION LEVEL — ~~OK~~ → **12**

11

✓ CHECK FRONT PROPELLER SHAFT CONDITION

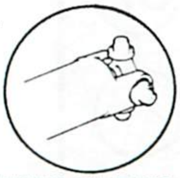

WORN, BINDING BRINELLED U-JOINT

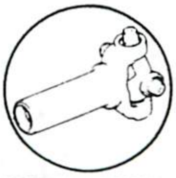

WORN, LOOSE BINDING SLIP YOKE

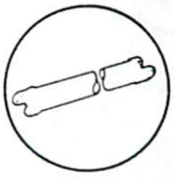

BENT TUBE

EXCESSIVE PAINT OR UNDERCOATING ON TUBE

OK → **12**

~~OK~~ → REPAIR OR REPLACE SHAFT

ROAD TEST **2** → OK → STOP

~~OK~~ → **13**

80787D

STEP **SEQUENCE** **RESULT**

12

CHECK REAR AXLE PINION AND TRANSFER CASE YOKE RUNOUT USING TOOL J-24649-1

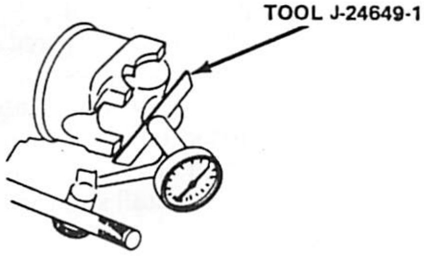

MAXIMUM ALLOWABLE RUNOUT AT EITHER YOKE IS 0.006 (0.15 mm)

*REPLACEMENT YOKE RUNOUT SHOULD BE CHECKED ALSO

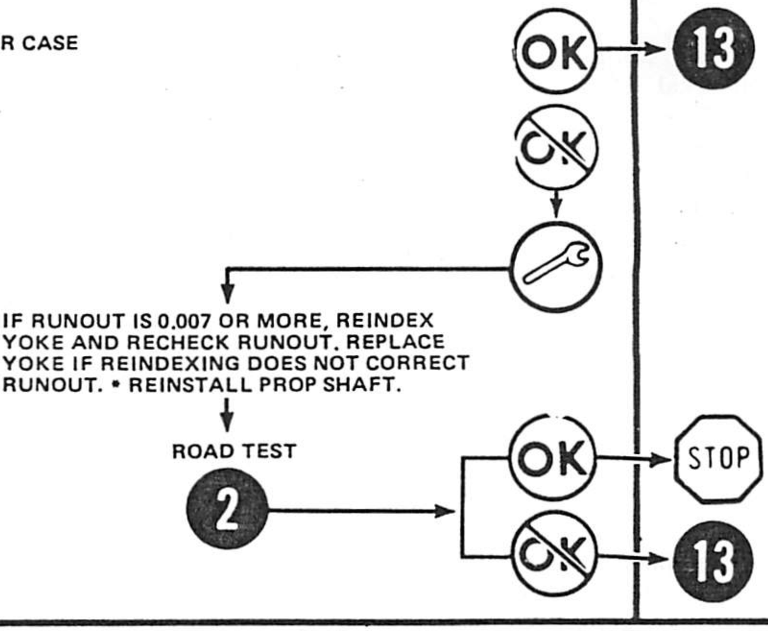

IF RUNOUT IS 0.007 OR MORE, REINDEX YOKE AND RECHECK RUNOUT. REPLACE YOKE IF REINDEXING DOES NOT CORRECT RUNOUT. * REINSTALL PROP SHAFT.

ROAD TEST

13

CHECK FRONT PROPELLER SHAFT RUNOUT USING DIAL INDICATOR

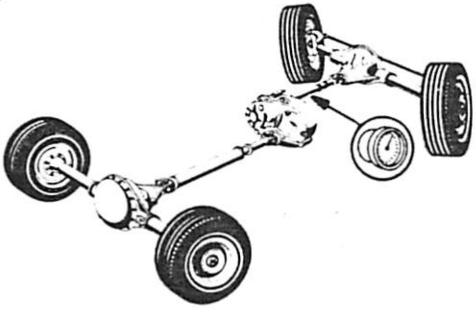

MAXIMUM ALLOWABLE RUNOUT OF SHAFT IS .015 (INCHES) TOTAL INDICATOR RUNOUT AT ENDS AND CENTER OF SHAFT. AT SHAFT ENDS, MEASURE RUNOUT 3 INCHES FROM SHAFT WELD SEAMS.

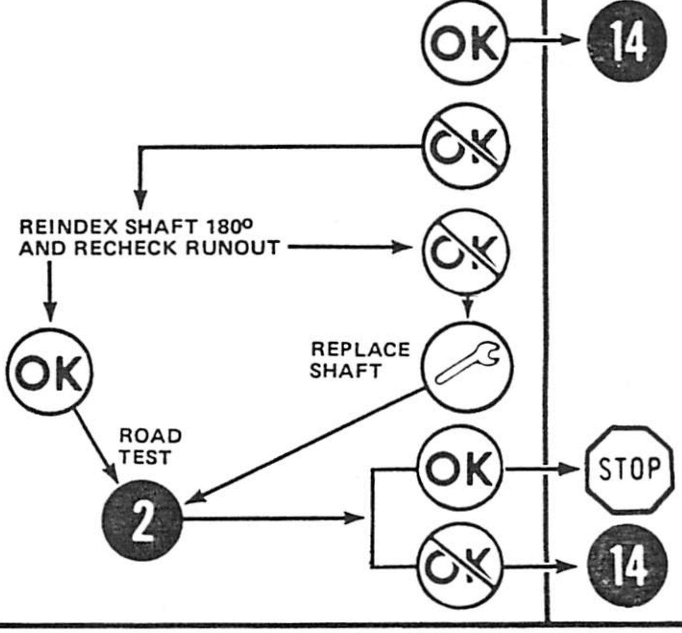

REINDEX SHAFT 180° AND RECHECK RUNOUT

REPLACE SHAFT

ROAD TEST

14

CHECK FRONT AXLE PINION AND FRONT PROPELLER SHAFT ANGLES USING MAGNETIC BASE PROTECTOR

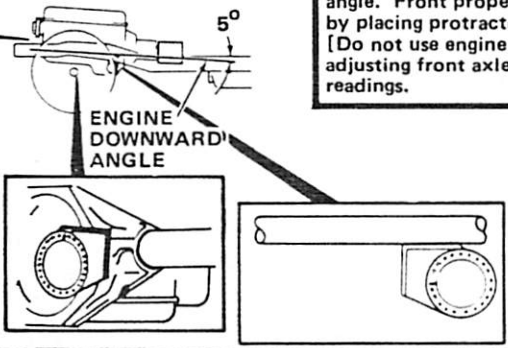

FRONT AXLE PINION ANGLE MUST BE ½° TO 1½° (1° PREFERRED) ABOVE FRONT PROPELLER SHAFT ANGLE. USE APPROPRIATE SHIMS TO OBTAIN CORRECT ANGLE

NOTE: Front axle pinion angle is measured using same procedure as rear axle pinion angle. Front propeller shaft angle is measured by placing protractor on front driveshaft. [Do not use engine downward angle as base for adjusting front axle pinion angle.] Record readings.

ROAD TEST

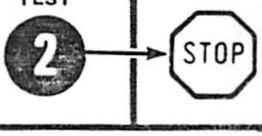

80787E

UNIVERSAL JOINT ANGLE MEASUREMENT AND ADJUSTMENT

When torque is transmitted through single cardan universal joints operating at an angle, the rotating speeds of the driving and driven yoke will differ. In operation, the driving yoke rotates at a constant speed while the driven yoke speeds up and slows down twice every revolution.

This difference in driven yoke rotating speed is proportional to the operating angle of the universal joint. In effect, the greater the universal joint operating angle, the greater the speed fluctuation of the driven yoke.

If fluctuation is excessive, driveline vibration will occur. As a result, the universal joint operating angles must be controlled to minimize this effect.

On some Jeep models with Quadra-Trac, an incorrect rear propeller shaft universal joint angle will generate an audible-type vibration. The vibration occurs as a constant booming or drone-like sound most noticeable in the 40 to 60 mph (64 to 97 km/h) speed range.

If a vehicle exhibits this condition, the rear propeller shaft universal joint and engine angles must be checked. If the angles are not within specified limits, shims must be installed between the rear axle spring pads and rear spring to correct the angles. Shims are available in one, two and three degree increments for this purpose. The angle measurement and correction procedure is as follows:

(1) Place vehicle on level surface.

(2) Measure engine downward angle as follows:

(a) Position protractor on left side of engine block at transmission mounting ear. Place protractor in fore and aft direction. Use mirror to view protractor if necessary.

(b) Record engine downward angle, remove protractor and proceed to next step.

(3) Measure pinion upward angle as follows:

(a) Place protractor on left side of rear axle housing on flat machined surface of housing that is next to welded plug. Be sure this surface is free of weld flash.

(b) Record pinion upward angle, remove protractor and proceed to next step.

(4) If pinion upward angle is one degree less than engine downward angle, pinion angle is within specified limits. Check for other causes of vibration.

(5) If pinion upward angle is greater than engine downward angle by more than one degree, pinion angle must be adjusted as follows.

EXAMPLE: If the engine angle measures 5 degrees downward and the pinion angle measures 7 degrees upward, the pinion angle must by adjusted downward 3 degrees. This changes the pinion downward angle to 4 degrees which is the required one degree less than the engine downward angle.

(6) Adjust pinion angle as outlined in following steps.

(7) Raise rear of vehicle and place support stands under frame rails.

(8) Position hydraulic jack under axle housing and raise jack just enough to support weight of axle.

(9) Remove rear wheels.

(10) Loosen rear spring U-bolt nuts.

(11) Install appropriate degree tapered shim between spring and axle spring pad as follows:

(a) On vehicles with spring mounted above axle, if angle must be adjusted downward, install shim so thickest end is facing front of vehicle. However, if angle must be adjusted upward, install shim so thickest end is facing rear of vehicle.

(b) On vehicles with spring mounted below axle, if angle must be adjusted downward, install shims so thickest end is facing rear of vehicle. However, if angle must be adjusted upward, install shims so thickest end is facing front of vehicle.

(12) Tighten U-bolt nuts to 100 foot-pounds (135 N•m) torque.

(13) Install rear wheels.

(14) Remove support stands and lower vehicle.

LUBRICATION

The propeller shaft slip yoke and universal joints on all Jeep vehicles require periodic lubrication. Refer to the Maintenance Schedule in Chapter B for specific details.

Lubricant Type

When lubricating the slip yokes and universal joints, use Jeep Chassis Lubricant or an equivalent lithium-base chassis grease only.

Lubrication Intervals

On Cherokee, Wagoneer and Truck models, the slip yokes and universal joints must be lubricated at 12,500 mile (20 000 km) or 12.5 month intervals in normal service and at 5,000 mile (8 000 km) or 5 month intervals for heavy-duty service.

On CJ and Scrambler models, the slip yoke and universal joints must be lubricated at 5,000 mile (8 000 km) or 5 month intervals in normal service and at 2,500 mile (4 000 km) or 2.5 month intervals for heavy-duty service.

Lubrication Fittings

Externally mounted lubrication fittings are located in the slip yokes and single cardan universal joint spiders for lubrication purposes.

Double cardan universal joints have special ball and spring fittings that require a needle-type lube gun nozzle adapter (fig. 2E-7). When lubricating double cardan joints, use Lube Fitting Adapter J-25512-2 (fig. 2E-8) or Alemite Lube Fitting Adapter 6783, or equivalent.

CAUTION: *It is important that the recommended lubricant and lubrication schedule be adhered to. Failure to comply with lubrication requirements may result in premature wear of propeller shaft components.*

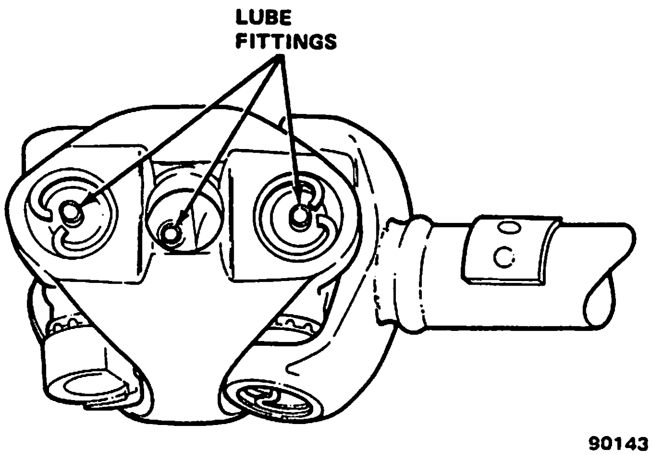

Fig. 2E-6 Double Cardan Joint Lube Fittings

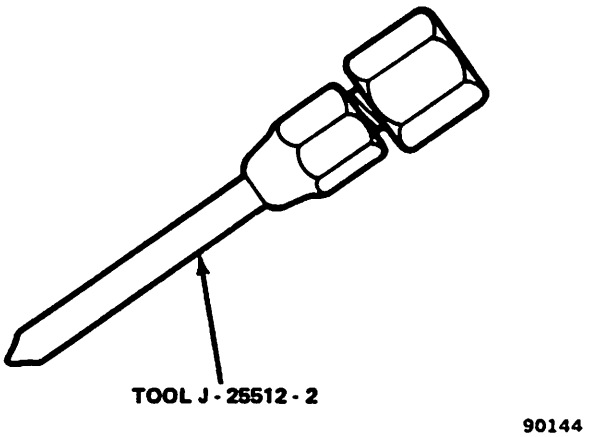

Fig. 2E-7 Double Cardan Lube Fitting Adapter

PROPELLER SHAFT SERVICE

Removal—Front Shaft

(1) Raise vehicle.

(2) Mark propeller shaft yokes, transfer case output shaft yoke, and axle yoke for assembly alignment reference.

(3) Disconnect propeller shaft at axle and transfer case yokes and remove shaft.

Installation—Front Shaft

(1) Align reference marks on propeller shaft and yokes and install propeller shaft.

(2) Tighten clamp strap bolts to 15 foot-pounds (20 N•m) torque.

(3) Lower vehicle.

Removal—Rear Shaft

(1) Raise vehicle.

(2) Mark propeller shaft, transfer case
flange, and axle yoke for assembly alignment re

(3) Disconnect shaft at transfer case and ax
and remove shaft.

Installation—Rear Shaft

(1) Align reference marks on propeller sha
and install shaft.

(2) Tighten clamp strap bolts to 15 foot-po
N•m) torque.

(3) Lower vehicle.

UNIVERSAL JOINT SERVICE

The single and double cardan universal joi
serviced as assemblies. Both universal joint type
disassembled for inspection and replacement pu

Disassembly—Single Cardan Joint

(1) If slip yoke universal joint is to be r
paint alignment marks on slip yoke and propell
for assembly reference and remove slip yoke fro

(2) Remove loose bearing caps from spider
ply penetrating oil to bearing caps seated in sha

(3) Mount propeller shaft or slip yoke in vise.

CAUTION: *Do not clamp the propeller shaft
the vise. Clamp only the forged portion of the sl
or propeller shaft yoke in the vise. Also, to av
torting either of the yokes, do not overtighten th*

(4) Remove bearing cap retainers (fig. 2E
ends of bearing caps with hammer to relieve pre
retainers if necessary.

(5) Reposition shaft in vise so yoke is supp
vise jaws.

(6) Tap end of one bearing cap with hamm
opposite bearing cap is driven out of yoke.

(7) Reposition shaft yoke in vise and tap
end of spider to drive remaining bearing cap out

(8) Remove spider from yoke.

Cleaning and Inspection

Clean the yoke bearing cap bores with solven
wire brush. Be sure to remove all rust, corrosion
Wash the bearing caps, bearings and spiders in
and wipe them dry with a shop cloth.

Inspect the bearing caps, needle bearings and
surfaces of the spider for evidence of brinneling
sive wear, flat spots, scoring or cracks. Replace t
plete assembly if any part exhibits these conditi

Assembly—Single Cardan Joint

(1) Lubricate all needle bearings, bearing caps and bearing surfaces of spider with chassis grease. Also apply thin film of grease to exterior surface of bearing caps.

(2) Install bearing cap seals on spider.

(3) Install one bearing and needle bearing assembly part-way into shaft yoke.

(4) Position spider in shaft yoke and install opposite bearing cap and needle bearing assembly in yoke.

(5) Support yoke on vise jaws and seat both bearing caps in yoke using hammer.

(6) Install bearing cap retainers. Tap ends of bearing caps to seat caps fully if retainers are difficult to install.

(7) Install two remaining bearing cap and needle bearing assemblies on spider. Use rubber band or tape to retain these caps on spider until shaft is to be installed.

Disassembly—Double Cardan Joint

NOTE: *The socket yoke, ball, spring, needle bearings, retainer and thrust washers are serviced as an assembly only (fig. 2E-6). When servicing the double cardan joint, do not disassemble these components. If any one component is damaged, replace the assembly.*

(1) Remove all bearing cap retainers.

(2) Mark bearing caps, spiders, propeller shaft yoke, link yoke and socket yoke for assembly alignment reference.

(3) Remove bearing caps attaching front spider to propeller shaft yoke as follows (fig. 2E-5):

(a) Use 5/8 socket as bearing cap driver and 1-1/16 socket as bearing cap receiver.

(b) Place 5/8 socket on one bearing cap and 1-1/16 socket over opposite bearing cap.

(c) Mount assembly in vise so vise jaws bear directly against sockets positioned on bearing caps.

(d) Tighten vise to press first bearing cap out of link yoke.

(e) Loosen vise, reposition sockets, and press opposite bearing cap out of link yoke.

(4) Disengage propeller shaft yoke from link yoke.

(5) Remove bearing caps attaching front spider to propeller shaft yoke as outlined in step (3).

(6) Remove front spider from yoke.

(7) Remove bearing caps attaching rear spider to link yoke as outlined in step (3) and remove rear spider and socket yoke from link yoke.

Cleaning and Inspection

Clean the yoke bearing cap bores with solvent and a wire brush. Be sure to remove all rust, dirt and corrosion from the bores. Wash the universal joint components in solvent and wipe them dry with a shop cloth.

Inspect all bearings and bearing surfaces for excessive wear, galling, brinneling, scoring, flat spots or cracks. Inspect the yokes for distortion, cracks or worn bearing cap bores. Replace the complete assembly if any component exhibits these conditions.

Assembly—Double Cardan Joint

NOTE: *When assembling the universal joint, be sure to align the spiders and yokes according to the reference marks made during disassembly.*

(1) Lubricate all bearings and bearing contact surfaces with lithium-base chassis grease.

(2) Install bearing caps on transfer case yoke ends of rear spider. Secure caps to spider using tape.

(3) Assemble socket yoke and rear spider.

(4) Position rear spider in link yoke and install bearing caps. Press caps into yoke using 5/8 socket. Be sure to press caps into yoke bores far enough to expose bearing cap retainer grooves.

(5) Install rear spider-to-link yoke bearing cap retainers.

(6) Position front spider in propeller shaft yoke and install bearing caps. Press caps into yoke using 5/8 socket. Be sure to press caps into yoke bores far enough to expose bearing cap retainer grooves.

(7) Install front spider-to-propeller shaft yoke bearing cap retainers.

(8) Install thrust washer and socket spring in ball socket bearing bore, if removed.

(9) Install thrust washer on ball socket bearing boss (located on propeller shaft yoke), if removed.

(10) Align ball socket bearing boss on propeller shaft yoke with ball socket bearing bore and insert boss into bore.

(11) Align front spider with link yoke bearing cap bores and install bearing caps. Press caps into yoke using 5/8 socket. Be sure to press caps into yoke bores far enough to expose bearing cap retainer grooves.

(12) Install front spider-to-link yoke bearing cap retainers.

SPECIFICATIONS

Universal Joint Angle Chart

	Front		Rear	
	OK Range	Set-To	OK Range	Set-To
Cherokee Wagoneer Truck	6°-8°	7°	4°-6°	5°
CJ/Scrambler	3°-5°	4°	4°-6°	5°

70556

Torque Specifications

Service Set-To Torques should be used when assembling components. Service In-Use Recheck Torques should be used for checking a pre-tightened item.

	USA (ft-lbs)		Metric (N·m)	
	Service Set-To Torque	Service In-Use Recheck Torque	Service Set-To Torque	Service In-Use Recheck Torque
Pinion Yoke Nut:				
Model 30-44 Axle	210	200-220	285	271-298
Model 60 Axle	260	250-270	352	339-366
AMC—Jeep Axle		Add 5 in-lbs. (0.56 N·m) torque measured at disassemble. Refer to Pinion Seal and Yoke Replacement, Chapter 2F- AMC—Jeep Axle.		
Universal Joint Clamp Strap Bolt	15	13-18	20	18-24

All Torque values given in foot-pounds and newton-meters with dry fits unless otherwise specified.

80336

Tools

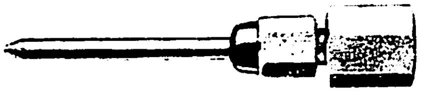

LUBE FITTING ADAPTER TOOL J-25512-2

J-24649-1 YOKE RUNOUT GAUGE

NOTES

AXLES — FRONT HUBS

2F

SECTION INDEX

AXLE TESTING AND DIAGNOSIS

GENERAL

When diagnosing an axle or front drive hub noise condition, obtain a complete description of the noise and driving conditions when the noise occurred. A preliminary road test with the owner demonstrating the complaint condition is recommended.

The action of transmitting engine torque to the wheels will produce some noise in all axles. Slight axle noises confined to a brief speed range or specific period are considered normal.

Noises produced by the engine, transfer case, transmission, tires, wheel bearings, exhaust system, propeller shaft, or the action of wind on the body or grille may be incorrectly diagnosed as axle noise. It is important to test the vehicle thoroughly in order to isolate the problem component and avoid unnecessary repair.

During the road test, stop the vehicle, shift the transmission into neutral, and operate the engine at various speeds. If the noise is heard during this test, the noise is being produced by the engine, exhaust system, clutch, transmission, transfer case, or by engine driven accessory equipment.

Before road testing, check and correct the tire inflation pressures and axle lubricant levels.

TIRE NOISE DIAGNOSIS

Because certain types of tire tread wear or tread patterns may produce objectionable noises, drive the vehicle on various types of road surfaces and listen for a change in the noise. If the noise varies with the type of road surface, the tires may be causing the noise.

WHEEL BEARING DIAGNOSIS

Worn, loose, or damaged wheel bearings can be confused with axle noises. Wheel bearing noise is usually more noticeable when coasting at lower vehicle speeds. Applying the brakes gently while the vehicle is moving will usually change wheel bearing noise. Another test involves turning the vehicle alternately left and right while moving straight ahead at relatively low speed. This manuever side-loads the bearings and should cause the problem bearing to become noisier.

AXLE TEST AND DIAGNOSIS

Before testing the axle, drive the vehicle a distance sufficient to warm the axles and axle lubricant. During the test, operate the transmission and transfer case in every gear combination.

Axle noises are usually related to vehicle speed rather than engine rpm or transmission gear range.

Axle noises may be classified into two types: gear noise and bearing noise.

Gear noise is often described as a whine or high-pitched resonating sound. It is usually more pronounced at certain vehicle speeds and within a narrow speed range under a drive (accelerating load), coast (decelerating load), or float (constant speed) condition.

Axle bearing noise is usually constant and the pitch is related to vehicle speed.

Since the pinion gear rotates faster than the ring gear, the pinion bearings produce a higher pitch sound than the differential bearings. The pinion bearings are usually heard at lower vehicle speeds of 20 to 30 mph (32 to 48 km/h).

Differential bearings produce a lower pitch sound because they are rotating at the same speed as the wheels. Differential bearing noise will not vary when the vehicle is turned alternately left and right or when the brakes are gently applied.

Axle Noisy On Pull and Coast

- Excessive ring and pinion backlash.
- Excessive pinion end play.
- Worn pinion bearings.
- Incorrect pinion depth adjustment.
- Incorrect lubricant (Trac-Lok differential).

Axle Noisy On Pull

- Incorrect ring and pinion backlash or depth adjustment.
- Damaged or worn pinion bearings.
- Incorrect pinion bearing preload.

AXLE NOISY ON COAST

- Excessive ring and pinion backlash.
- Excessive pinion end play.
- Worn or damaged pinion or differential bearings.
- Excessive differential bearing preload.

Backlash

Excessive driveline backlash may be the result of backlash in the transmission, transfer case, propeller shaft yokes or slip joint splines, universal joints, ring and pinion gears, differential gears, front axle shaft splines or universal joints, or rear axle shaft splines.

Chatter—Trac-Lok Differential

Trac-Lok chatter is usually caused by using non-recommended lubricants. If chatter occurs, drain and refill the axle with Jeep Axle lubricant or equivalent only.

Other Axle Conditions

A knocking noise heard at low speed or when coasting may be caused by loose fitting differential side gears. If this condition is encountered, operate the vehicle at the speed where noise is loudest and apply the brakes lightly. If loose fitting gears are causing the problem, the noise level will usually decrease when the brakes are applied.

Differential gear noise is considered normal when spinning a wheel with an on-the-vehicle wheel balancer, or when the wheels are spinning on icy or other types of low traction surface.

Whenever axle noise is caused by worn or damaged bearings, do not replace the gears unless they are also worn or damaged. Similarily, if axle gears are causing noise, do not replace the bearings unless they are worn or damaged.

FRONT AXLE

GENERAL

A drive-type front axle with steering knuckles and hypoid differential gears is used on all Jeep models. Engine torque is transmitted to the wheels through full floating, two-piece axle shafts which have connecting universal joints (fig. 2F-1). The axle shafts revolve within and are supported by the steering knuckles. Open end steering knuckles which pivot on ball studs are used on all Jeep front axles.

The Model 30 front axle is used on all CJ and Scrambler models. The Model 44 front axle is used on all Cherokee, Wagoneer and Truck models. Service procedures for the two axle models are the same.

On all front axles, toe-in and caster are the only adjustable alignment angles. Camber is built into the axle and cannot be adjusted. Refer to Front End Alignment for adjustment methods.

AXLE IDENTIFICATION

On Model 44 front axles, the axle code number is cast into the upper surface of the reinforcing rib at the left side of the axle housing (fig. 2F-2).

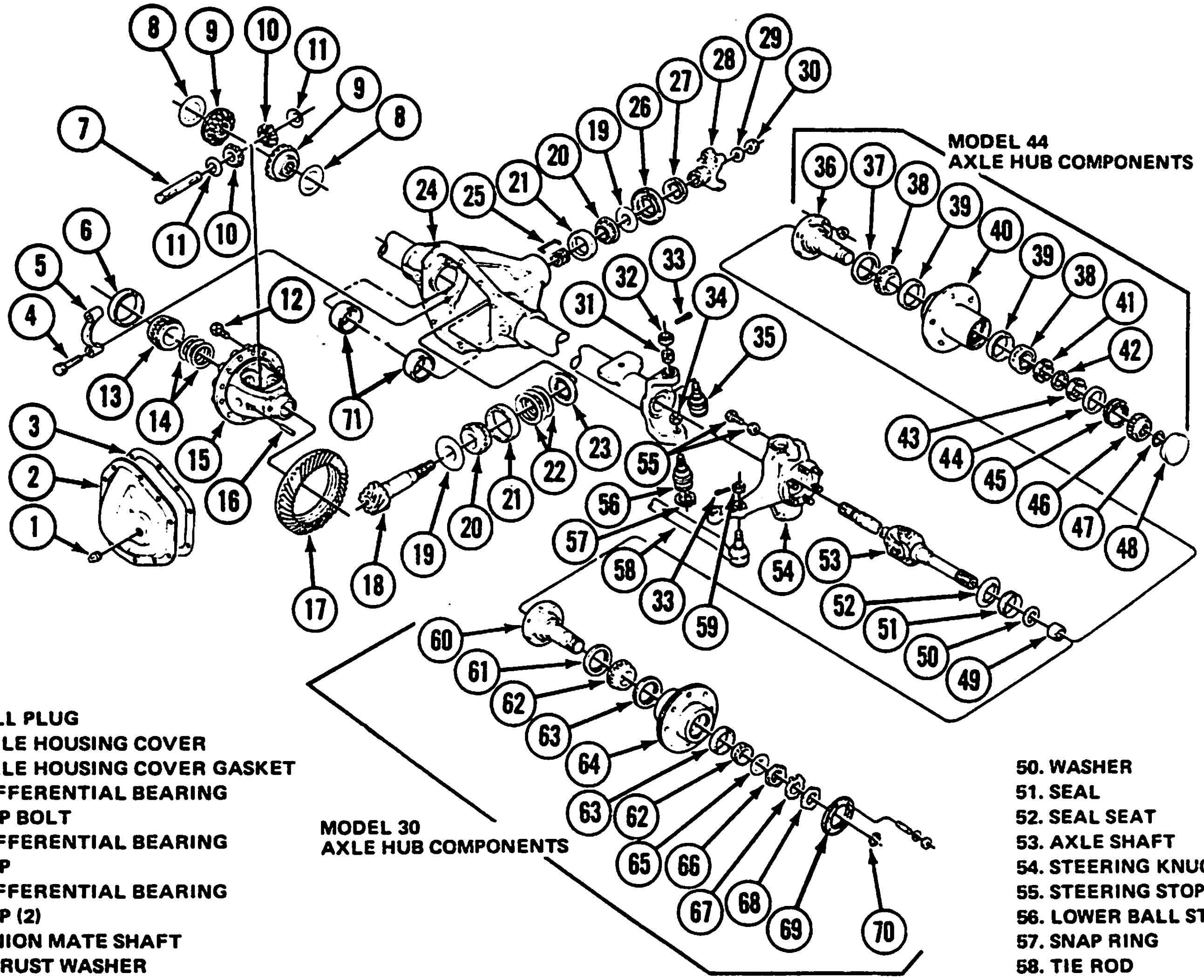

1. FILL PLUG
2. AXLE HOUSING COVER
3. AXLE HOUSING COVER GASKET
4. DIFFERENTIAL BEARING CAP BOLT
5. DIFFERENTIAL BEARING CAP
6. DIFFERENTIAL BEARING CUP (2)
7. PINION MATE SHAFT
8. THRUST WASHER
9. DIFFERENTIAL SIDE GEAR
10. DIFFERENTIAL PINION GEAR
11. THRUST WASHER
12. RING GEAR MOUNTING BOLTS
13. DIFFERENTIAL BEARING (2)
14. DIFFERENTIAL BEARING PRELOAD SHIMS
15. DIFFERENTIAL CASE
16. PINION MATE SHAFT PIN
17. RING GEAR
18. PINION GEAR
19. SLINGER
20. PINION BEARING
21. PINION BEARING CUP
22. PINION DEPTH SHIMS
23. BAFFLE
24. AXLE HOUSING
25. PINION PRELOAD SHIMS
26. OIL SEAL
27. DUST CAP
28. YOKE
29. WASHER
30. PINION NUT
31. UPPER BALL STUD SPLIT RING SEAT
32. UPPER BALL STUD NUT
33. COTTER PIN
34. LOWER BALL STUD JAMNUT
35. UPPER BALL STUD
36. SPINDLE
37. SEAL
38. BEARING
39. BEARING CUP
40. HUB
41. INNER LOCKNUT
42. WASHER
43. OUTER LOCKNUT
44. SPRING CUP*
45. PRESSURE SPRING*
46. DRIVE GEAR*
47. SNAP RING
48. HUB CAP*
49. SPINDLE BEARING
50. WASHER
51. SEAL
52. SEAL SEAT
53. AXLE SHAFT
54. STEERING KNUCKLE
55. STEERING STOP BOLT
56. LOWER BALL STUD
57. SNAP RING
58. TIE ROD
59. TIE ROD END NUT
60. SPINDLE
61. SEAL
62. BEARING
63. BEARING CUP
64. HUB
65. TABBED WASHER
66. INNER LOCKNUT
67. LOCK WASHER
68. OUTER LOCKNUT
69. GASKET
70. SNAP RING
71. INNER OIL SEAL

* NOT USED WITH FRONT DRIVE HUBS

80279

Fig. 2F-1 Front Axle Assembly

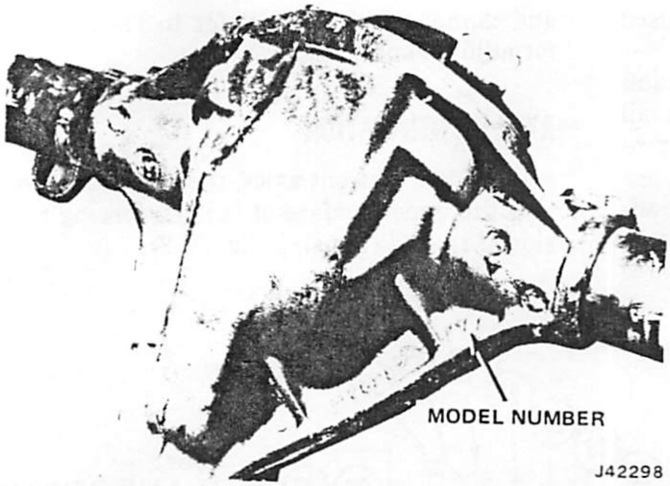

Fig. 2F-2 Model 44 Front Axle Code Number Location

On Model 30 front axles, the axle code number is cast into the bottom surface of the differential housing.

The axle build date and manufacturers build date are stamped on the right-side axle tube adjacent to the axle housing cover.

The axle build date is decoded as follows: The first number represents the month, the second number the day of the month, the third number the year, the letter the shift, and the last number is the assembly line. If there are two build dates, the latter date will indicate when the brake components were installed.

The gear ratio tag attached to the left side of the axle housing cover indicates the Jeep manufacturing reference part number and the numerical tooth combination of the ring and pinion gears.

Axle Ratio and Code Letter Chart

Differential Type	Gear Ratio	Code Letter	Pinion-to-Drive Gear Teeth
Standard	2.73	D	15/41
Trac-Lok	2.73	DD	15/41
Standard	3.31	B	13/43
Trac-Lok	3.31	CC	13/43
Standard	3.54	A	11/39
Trac-Lok	3.54	AA	11/39
Standard	3.73	GG	11/41
Trac-Lok	3.73	Q	11/41
Standard	4.10	C	10/41
Trac-Lok	4.10	CC	10/41

81014

AXLE HOUSING SERVICE

The front axle housing should be inspected periodically for weld cracks or other damage that could cause loss of lubricant, affect driving characteristics, or result in front end misalignment.

NOTE: *If the vehicle is driven through water that is deep enough to cover the front hubs, steering knuckles and brake components should be disassembled and inspected for water-dirt contamination and water damage. All components should be cleaned thoroughly, examined carefully, and lubricated as necessary before assembly. During the inspection, pay particular attention to the axle bearings, spindle bearings and brake components. Damaged or contaminated parts should be replaced.*

FRONT WHEEL ALIGNMENT

Toe-in and caster are the only adjustable front alignment angles. Camber is built into the axle during manufacture and cannot be adjusted.

An alignment rack should be used to check the alignment angles. The use of a rack will ensure more accurate readings and avoid the possibility of incorrect adjustments.

Toe-in is adjusted by lengthening or shortening the steering tie rod. Caster is adjusted by installing tapered shims between the front axle spring mounting pad and front spring. Refer to Front Wheel Alignment in Chapter 2M for measurement and adjustment procedures.

HIGH STEERING EFFORT

High steering effort or slow return of the steering mechanism after turns may be the result of excessive steering knuckle ball stud preload. If this condition occurs and all other items affecting steering effort are functioning normally, ball stud preload should be checked as follows:

Ball Stud Preload Measurement

(1) Raise vehicle.

(2) Remove front wheels.

(3) If vehicle has steering damper, disconnect damper at tie rod and move damper aside.

(4) Unlock steering column.

(5) Disconnect steering connecting rod. On CJ models, disconnect rod at right-side steering knuckle. On all other models, disconnect connecting rod at right-side of tie rod.

(6) Remove cotter pin and retaining nut attaching tie rod to right-side steering knuckle. Discard cotter pin.

(7) Rotate both steering knuckles through complete arc several times. Work from right-side of vehicle to rotate knuckles.

(8) Assemble socket and 0-50 foot-pound (68 N•m) capacity torque wrench and install wrench on tie rod retaining nut.

NOTE: *The torque wrench must be positioned at a 90 degree angle to the steering knuckle arm to obtain an accurate reading.*

(9) Rotate knuckles slowly and steadily through a complete arc and measure torque required to rotate knuckles.

(a) If reading is less than 25 foot-pounds (34 N•m), turning effort is within specifications and fault is not in steering knuckle. Check steering gear, pump and column.

(b) If reading is more than 25 foot-pounds (34 N•m), turning effort is excessive. Proceed to next step.

(10) Disconnect tie rod from both steering knuckles.

(11) Install 1/2 x 1 inch bolt, flat washer, and nut in tie rod stud mounting hole in one steering knuckle. Tighten bolt and nut securely.

(12) Assemble and install socket and 0-50 foot-pound (68 N•m) capacity torque wrench on bolt previously installed in steering knuckle.

NOTE: *The torque wrench must be positioned at a 90 degree angle to the steering knuckle arm.*

(13) Rotate steering knuckle slowly and steadily through complete arc and measure torque required to turn knuckle.

(14) Install bolt, flat washer, nut, torque wrench and socket on opposite steering knuckle and measure torque required to rotate knuckle.

(a) If reading is less than 10 foot-pounds (14 N•m), steering effort is within specifications and fault is not in knuckle ball studs. Check for tight or damaged tie rod ends, lubricate or replace as necessary, and proceed to next step.

(b) If torque reading is more than 10 foot-pounds (14 N•m), turning effort is excessive. Proceed to Ball Stud Preload Correction procedure.

(15) Install tie rod. Tighten tie retaining nuts to 35 foot-pounds (47 N•m) torque and install replacement cotter pins.

(16) Install connecting rod. Tighten connecting rod retaining nuts to 60 foot-pounds (81 N•m) torque on CJ and Scrambler models and 75 foot-pounds (102 N•m) torque on all other models. Install replacement cotter pins.

(17) Install front wheels.

(18) Lower vehicle.

Ball Stud Preload Correction

(1) Remove front axle shafts as outlined in this chapter.

(2) Loosen lower ball stud jamnut.

(3) Remove cotter pin and slotted nut from upper ball stud.

(4) Unseat upper and lower ball studs by striking studs with lead hammer.

(5) Remove upper ball stud split ring seat using Tool J-23447. Discard seat after removal.

(6) Remove lower ball stud jamnut and remove steering knuckle. Discard jamnut after removal.

(7) Clean upper ball stud split ring seat threads, lower ball stud taper in steering knuckle, threads and tapered surfaces of ball studs, and upper ball stud retaining nut threads.

(8) Position steering knuckle on axle and install replacement lower ball stud jamnut finger-tight (only).

(9) Install and tighten upper ball stud slotted nut to 10 to 20 foot-pounds (13 to 27 N•m) torque to draw lower ball stud into tapered hole in axle yoke. Do not install upper ball stud split ring seat at this time.

(10) Tighten replacement lower ball stud jamnut to 80 foot-pounds (108 N•m) torque.

(11) Remove upper ball stud slotted nut and install replacement split ring seat using Tool J-23447. Tighten seat to 50 foot-pounds (68 N•m) torque.

(12) Install slotted nut on upper ball stud. Tighten nut to 100 foot-pounds (136 N•m) torque. Align and install cotter pin without loosening slotted nut.

NOTE: *If the cotter pin holes in the nut and stud are not aligned, tighten the nut (only) to align the holes. Never loosen the nut to align the holes.*

(13) Install front axle shafts and steering spindles loosely and measure turning effort of each steering knuckle as described in Ball Stud Preload Measurement.

(a) If turning effort is less than 10 foot-pounds (14 N•m) torque, proceed to next step.

(b) If turning effort is more than 10 foot-pounds (14 N•m) torque, replace upper and lower ball studs and repeat Ball Stud Preload Correction procedure.

NOTE: *If the Ball Stud Preload Correction Procedure is repeated, tighten split ring seat to 50 foot-pounds (68 N•m) torque. Also, tighten the slotted nut on the upper ball stud to 80 foot-pounds (108 N•m) torque.*

(14) Install front axle shafts.

(15) Connect tie rod to steering knuckle arms. Tighten tie rod end retaining nuts to 45 foot-pounds (61 N•m) torque and install replacement cotter pins.

(16) Attach connecting rod to tie rod. Tighten connecting rod end retaining nut to 60 foot-pounds (81 N•m) torque on CJ and Scrambler models and 75 foot-pounds (102 N•m) torque on all other models.

(17) Connect steering damper to tie rod, if equipped.

(18) Install front wheels. Tighten wheel retaining nuts to 80 foot-pounds (108 N•m) torque.

(19) Lower vehicle.

PINION SEAL AND YOKE

Removal

(1) Raise vehicle.

(2) Mark propeller shaft and yoke for assembly alignment reference and disconnect propeller shaft from yoke.

(3) Remove pinion nut and washer using socket, breaker bar, and Tool J-8614-01 (fig. 2F-3).

(4) Remove yoke using Tools J-8614-01, -02, -03 (fig. 2F-4).

(5) Remove pinion seal using Tool J-25180.

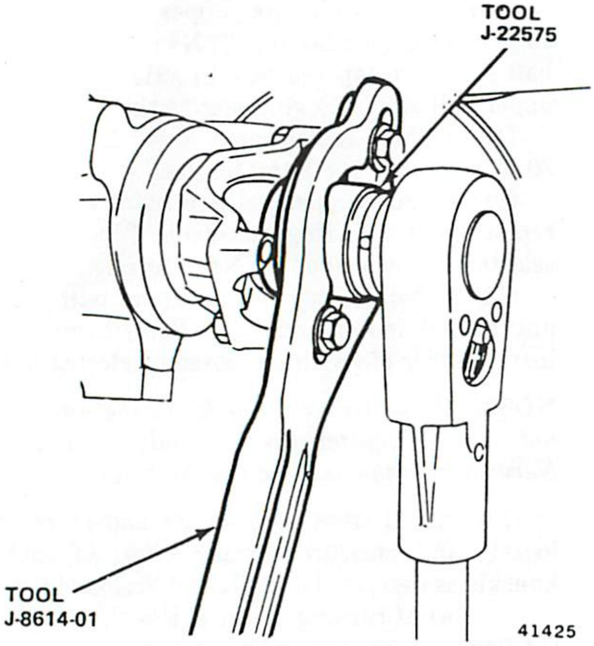

Fig. 2F-3 Pinion Nut Removal

Installation

(1) Install replacement seal using Tool J-25104.

(2) Install yoke.

(3) Install pinion washer and nut. Tighten nut to 210 foot-pounds torque.

(4) Align reference marks on propeller shaft and yoke and connect shaft to yoke. Tighten shaft-to-yoke attaching bolts or nuts to 16 foot-pounds (22 N•m) torque.

(5) Lower vehicle.

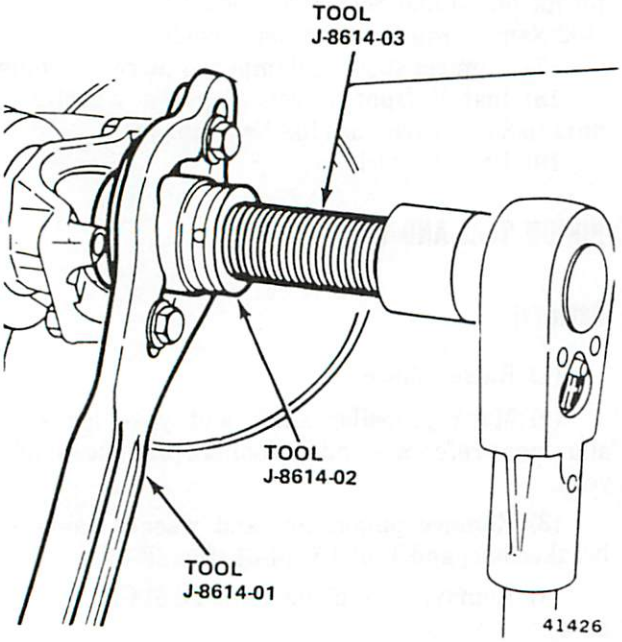

Fig. 2F-4 Pinion Yoke Removal

AXLE SHAFT

Removal—CJ and Scrambler Models

(1) Raise vehicle.

(2) Remove disc brake caliper. Refer to Chapter 2G.

(3) Remove bolts attaching front hub to axle and remove hub body and gasket.

(4) Remove retaining ring from axle shaft.

(5) Remove hub clutch and bearing assembly from axle.

(6) Straighten lip of lock washer.

(7) Remove outer locknut, lock washer, inner locknut, and tabbed washer. Use Tool J-25103 to remove locknuts.

(8) Remove outer bearing and remove disc brake rotor.

(9) Remove disc brake caliper adapter and splash shield.

(10) Remove axle spindle.

(11) Remove axle shaft and universal joint assembly.

Installation—CJ and Scrambler Models

(1) Clean all parts thoroughly.

(2) Install axle shaft and universal joint assembly. Insert splined end of axle shaft into differential side gear and push shaft into place.

(3) Install axle spindle.

(4) Install splash shield and disc brake caliper adapter.

(5) Lubricate and install outer bearing in disc brake rotor.

(6) Install disc brake rotor on spindle.

(7) Install tabbed washer and inner locknut. Tighten locknut to 50 foot-pounds (68 N•m) torque; then back off locknut 1/6 turn (45°-65°). Rotate wheel while tightening inner locknut to seat bearings evenly. Use Tool J-25103 to tighten locknut.

(8) Install lock washer and outer locknut. Tighten locknut to 50 foot-pounds (68 N•m) torque and bend lip of lock washer over nut.

(9) Install hub clutch and bearing assembly on axle shaft.

(10) Install retaining ring on axle shaft.

(11) Install gasket and hub body on axle and install hub attaching bolts. Tighten bolts to 30 foot-pounds (41 N•m) torque. Tighten bolts alternately and evenly.

(12) Install disc brake caliper. Refer to Chapter 2G.

(13) Lower vehicle.

Removal—Cherokee-Wagoneer-Truck

(1) Raise vehicle.

(2) Remove disc brake caliper. Refer to Chapter 2G.

(3) On models without front hubs:

(a) Remove rotor hub cap.

(b) Remove axle shaft snap ring, drive gear, pressure spring, and spring retainer.

(4) On models with front hubs:

(a) Remove socket head screws from hub body and remove body and large retaining ring.

(b) Remove small retaining ring from axle shaft.

(c) Remove hub clutch assembly from axle.

(5) Remove outer locknut, washer, and inner locknut using Tool J-6893.

(6) Remove rotor. Spring retainer and outer bearing are removed with rotor.

(7) Remove nuts and bolts attaching spindle and support shield and remove spindle and shield. If necessary, tap spindle with rawhide mallet to remove it from knuckle (fig. 2F-5).

(8) Remove axle shaft.

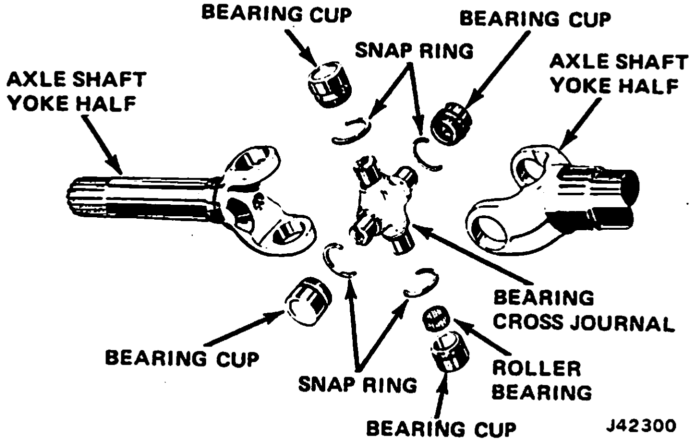

Fig. 2F-5 Axle Shaft Universal Joint

Installation—Cherokee-Wagoneer-Truck

(1) Install axle shaft. Insert splined end of axle shaft in differential side gear and push shaft into place.

(2) Install spindle.

(3) Install support shield and rotor.

(4) Install inner wheel bearing locknut (nut has peg on one side). Tighten locknut just enough to remove end play.

(5) Install wheel and tire but do not tighten wheel nuts completely.

(6) Tighten inner locknut to 50 foot-pounds (68 N•m) torque; then back off locknut 1/6-turn (45°-65°). Rotate wheel while tightening locknut to seat bearings evenly.

(7) Install washer so inner tab is aligned with spindle keyway. Also be sure peg on inner locknut engages in nearest hole in washer.

(8) Install and tighten outer locknut to minimum of 50 foot-pounds (68 N•m) torque.

(9) Remove wheel and tire.

(10) On models without front hubs:

(a) Install spring retainer, pressure spring, and drive gear.

CAUTION: *Install the spring retainer with the cupped side of the retainer facing toward the center of the vehicle.*

(b) Push drive gear inward to provide clearance for axle shaft snap ring and install snap ring.

(c) Coat rotor hub cap rim with Permatex Adhesive-Sealant number 3, or equivalent, and install hub cap in rotor.

(11) On models with front hubs:

(a) Install hub clutch assembly in axle.

(b) Install small retaining ring on axle shaft. Install large retaining ring in axle hubs.

(c) Install replacement O-ring on hub body, if necessary.

(d) Install hub body. Install and tighten socket head screws to 30 inch-pounds (3 N•m) torque.

(12) Install disc brake caliper. Refer to Chapter 2G.

(13) Install wheel and tire.

(14) Lower vehicle.

AXLE SHAFT UNIVERSAL JOINT

Replacement

(1) Remove axle shaft.

(2) Remove snap rings from universal joint bearing cups (fig. 2F-5).

(3) Press on end of one bearing cup to press opposite bearing from yoke half.

(4) Turn yoke over and press remaining bearing cup out of yoke by pressing on exposed end of bearing cross journal.

CAUTION: *To avoid damaging the bearing, remove the bearing using a brass drift having a flat face that is approximately 1/32-inch smaller in diameter than the hole in the axle shaft yoke.*

(5) Repeat above step to remove remaining bearing cups. Remove bearing cross journal by sliding it to one side and lifting out.

(6) Clean parts in solvent. Inspect parts after cleaning. Replace any part that exhibits excessive wear or damage.

(7) Pack bearing cups 1/3 full of bearing lubricant and install bearing rollers.

(8) Install bearing cross journal. Hold bearing cups in vertical position to prevent bearings from dropping out.

(9) Install bearing cups in axle shaft yoke halves and seat them firmly against bearing shoulders.

(10) Press bearing cups on journal from opposite side until firmly seated.

(11) Repeat previous steps to install opposite bearing cups on cross journal.

(12) Install snap rings on bearing cups.

NOTE: *If the universal joint binds when assembled, tap the yoke lightly to relieve any pressure on the bearings at each end of the journal.*

(13) Install axle shaft.

STEERING KNUCKLE REMOVAL

NOTE: *The open-end steering knuckle pivots on ball studs. Ball stud replacement requires removal of the axle shaft and steering knuckle (fig. 2F-6).*

(1) Remove axle shaft.

(2) Disconnect tie-rod end at steering knuckle arm.

(3) Remove and discard lower ball stud jamnut (fig. 2F-7).

(4) Remove cotter pin from upper ball stud and loosen stud nut until top edge of nut is flush with top of stud.

(5) Unseat upper and lower ball studs using lead hammer.

(6) Remove upper ball stud nut and steering knuckle.

(7) Remove upper ball stud split ring seat using Tool J-25158.

STEERING KNUCKLE BALL STUDS

Lower Ball Stud Removal

(1) Remove lower ball stud snap ring.

(2) Clamp knuckle assembly securely in vise with upper ball stud pointing downward (fig. 2F-8).

(3) Attach Plate J-25211-1 to spindle mating surface of knuckle assembly (fig. 2F-8).

(4) Position Button J-25211-3 on lower ball stud (fig. 2F-8).

(5) Assemble and install Puller J-25215 on steering knuckle (fig. 2F-8). Hook one puller arm in Plate J-25211-1 and hook opposite arm in knuckle.

(6) Tighten puller screw to press lower stud out of knuckle.

(7) Remove tools used to press stud from knuckle.

Upper Ball Stud—Removal

(1) Remove both arms from Puller J-25215.

(2) Place Button J-25211-3 on upper ball stud (fig. 2F-9).

(3) On CJ and Scrambler models, install Adapter J-25211-4 on nut-end of puller screw so adapter shoulder faces nut-end of screw.

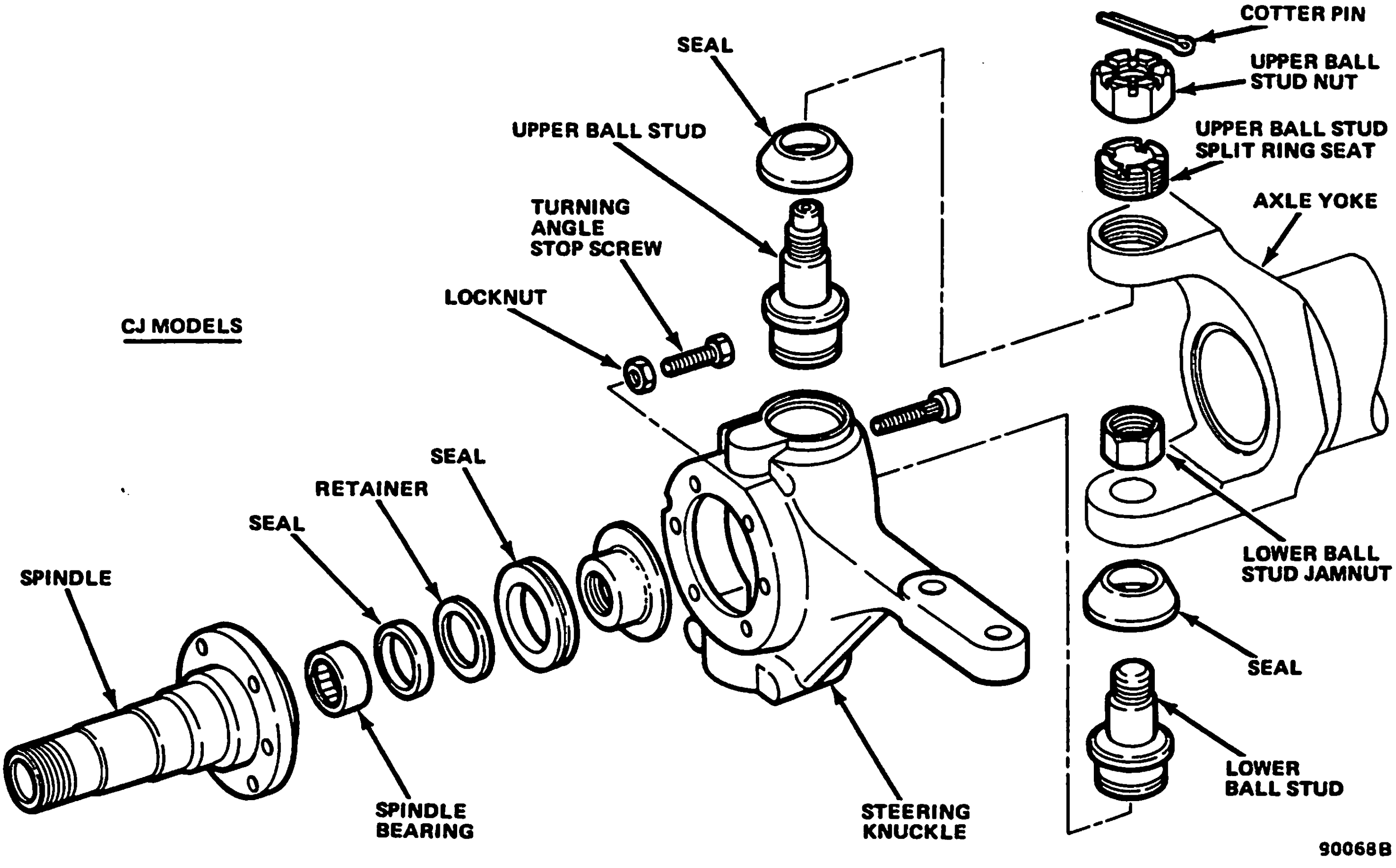

Fig. 2F-6 Steering Knuckle Components

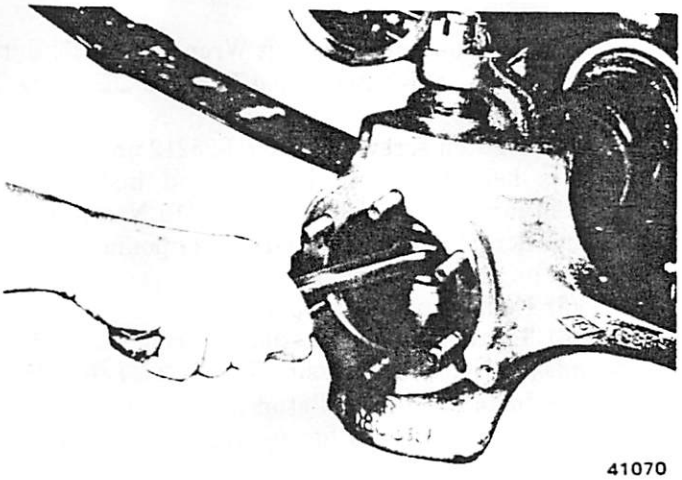

Fig. 2F-7 Lower Ball Stud Jamnut Removal

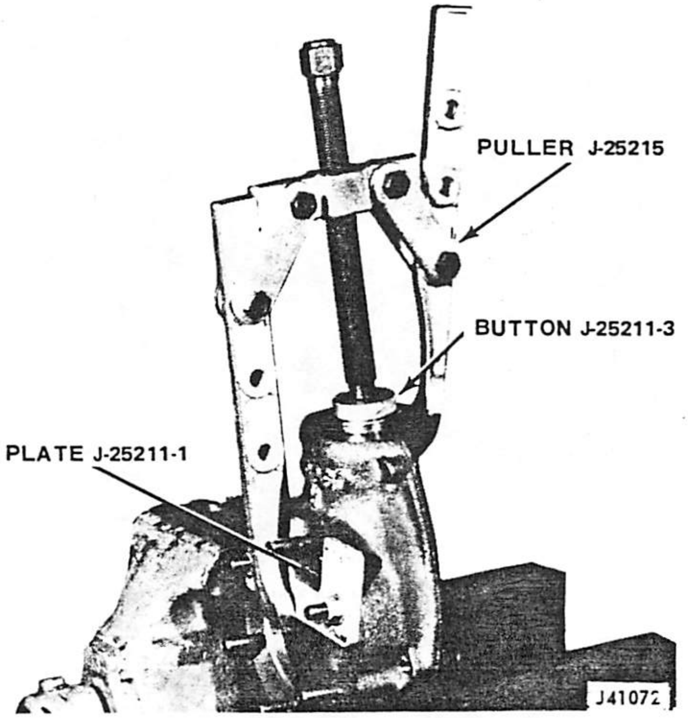

Fig. 2F-8 Lower Ball Stud Removal

(4) On all models, thread puller frame halfway onto puller screw. Insert nut-end of screw through lower ball stud hole in steering knuckle. Position puller frame against knuckle and puller screw against Button J-25211-3 (fig. 2F-9). On CJ and Scrambler models, be sure Adapter J-25211-4 is positioned between puller frame and steering knuckle.

(5) Tighten puller screw to press upper ball stud out of knuckle.

(6) Remove tools used to press upper ball stud from knuckle. Do not disassemble screw and frame of Puller J-25215 at this time. Tools will be used, as assembled, to install lower ball stud.

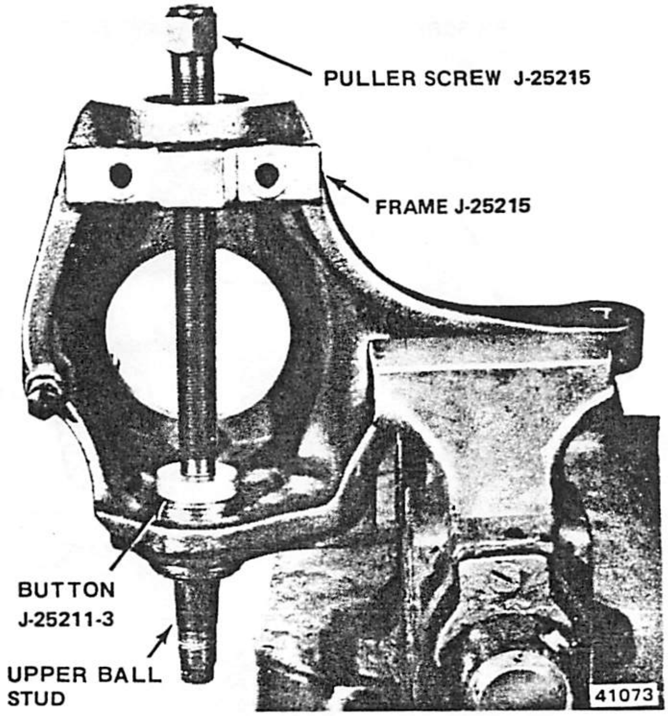

Fig. 2F-9 Upper Ball Stud Removal

Lower Ball Stud—Installation

(1) Invert steering knuckle in vise.

(2) Position replacement lower ball stud in steering knuckle.

(3) Place Adapter J-25211-4 over nut-end of puller screw and against puller frame (fig. 2F-10).

(4) Insert nut-end of puller screw through upper ball stud hole in knuckle and hold adapter and frame against knuckle (fig. 2F-10).

(5) Place Installer Cup J-25211-2 on ball stud (fig. 2F-10).

(6) Tighten puller screw to press lower ball stud into steering knuckle (fig. 2F-10).

(7) Install replacement lower ball stud retaining snap ring.

(8) Remove tools used to install lower ball stud.

Upper Ball Stud Installation

(1) Install both arms on Puller J-25215 (fig. 2F-11).

(2) Position replacement upper ball stud in steering knuckle.

(3) Install Plate J-25211-1 on spindle mounting studs (fig. 2F-11).

(4) Position Installer Cup J-25211-2 on upper ball stud (fig. 2F-11).

(5) Install assembled Puller J-25215 on steering knuckle. Hook one puller arm in plate and hook opposite arm in knuckle (fig. 2F-11). Be sure puller screw is centered on installer cup.

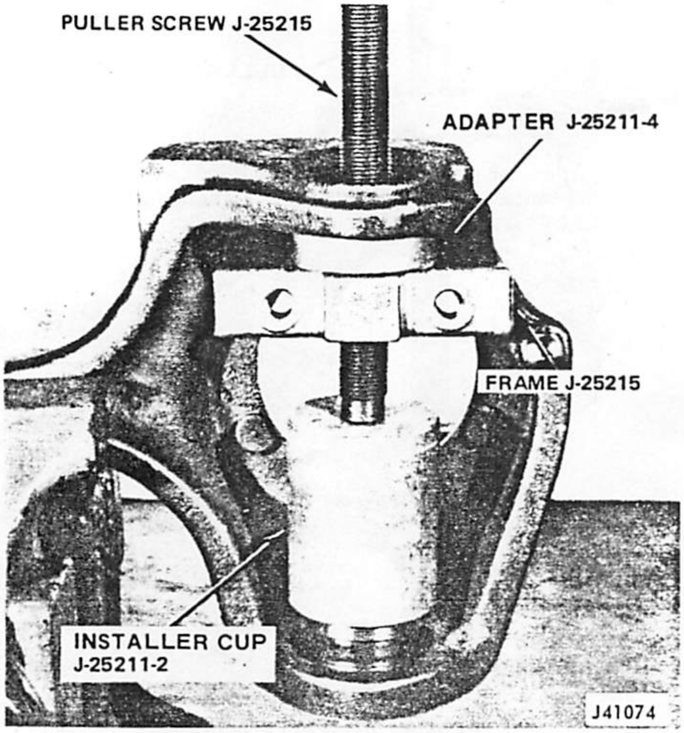

Fig. 2F-10 Lower Ball Stud Installation

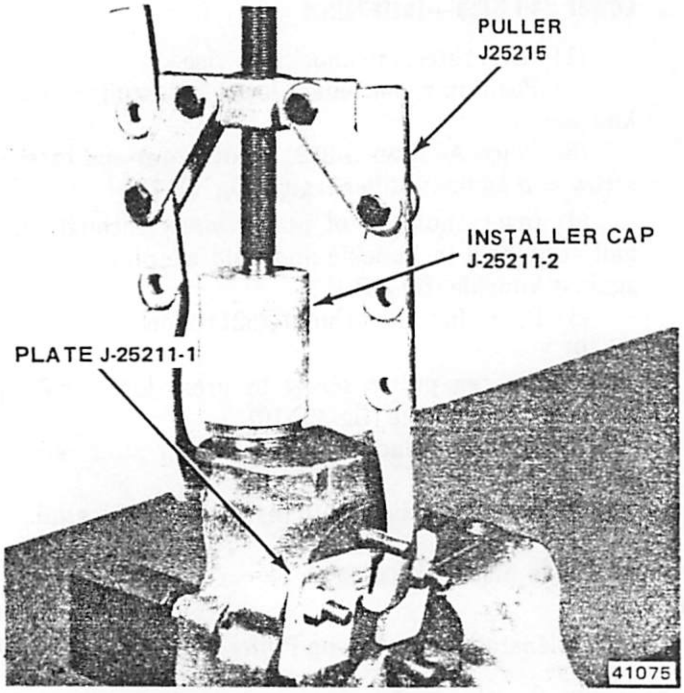

Fig. 2F-11 Upper Ball Stud Installation

(6) Tighten puller screw to press ball stud into steering knuckle (fig. 2F-11).

(7) Remove upper ball stud installation tools.

STEERING KNUCKLE INSTALLATION

(1) Install upper ball stud split ring seat in axle yoke. Top of seat should be flush with top of yoke.

(2) Install steering knuckle on axle yoke and install lower ball stud stud jamnut finger-tight only.

(3) Position and align Nut Wrench J-23447, Button J-25211-3, Plate J-25211-1, and Puller J-25212 (fig. 2F-12).

(4) Tighten screw of Puller J-25212 until lower ball stud is held firmly in its seat and install jamnut. Tighten jamnut to 85 foot-pounds (115 N•m) torque on CJ and Scrambler models and 75 foot-pounds (102 N•m) torque on all other models.

(5) Remove puller and plate.

(6) Tighten upper ball stud split ring seat to 50 foot-pounds (68 N•m) torque using Tool J-23447 *(fig. 2F-13)*.

(7) Install upper ball stud nut. Tighten nut to 100 foot-pounds (136 N•m) torque and install replacement cotter pin.

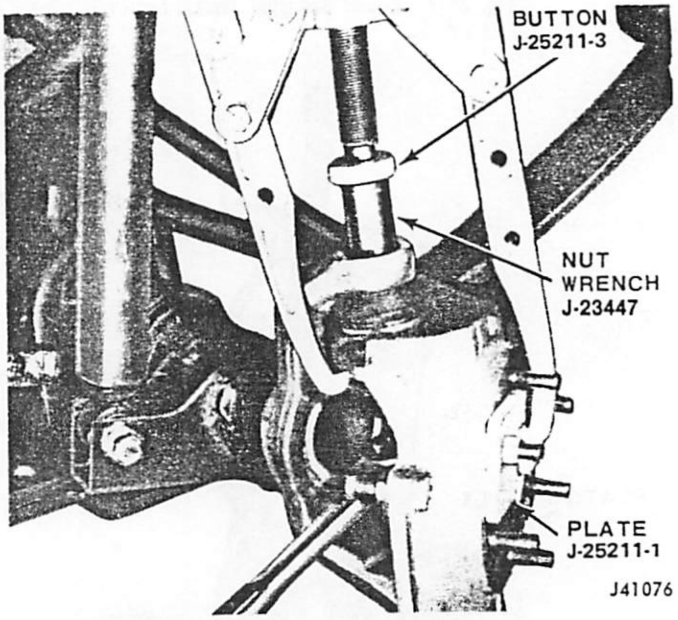

Fig. 2F-12 Steering Knuckle Installation

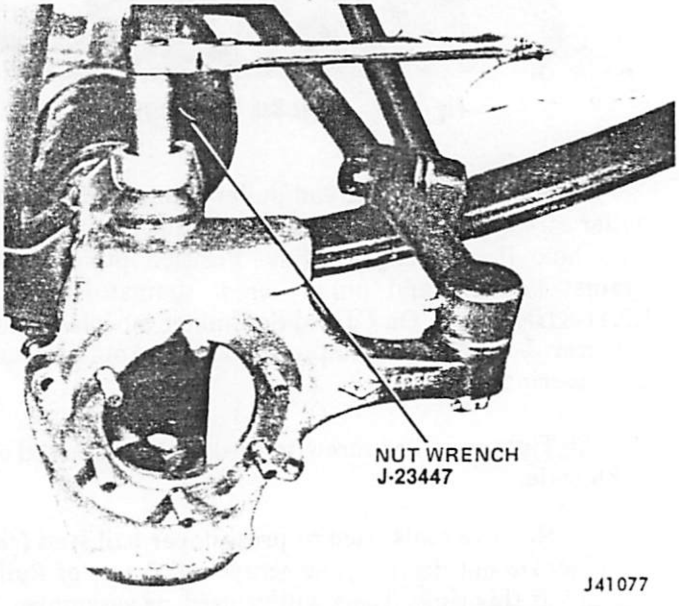

Fig. 2F-13 Tightening Upper Ball Stud Seat

NOTE: *If the cotter pin holes do not align, tighten the nut until the holes are aligned. Never loosen the nut to align the holes.*

(8) Connect steering tie rod. Tighten tie rod endnuts to 50 foot-pounds (68 N•m) torque and install replacement cotter pins.

(9) Check and correct front axle turning angle as necessary. Refer to Turning Angle Adjustment.

AXLE SHAFT SEAL

Replacement

(1) Remove axle shaft. Refer to Axle Shaft-Removal procedure.

(2) Remove seal from axle shaft (fig. 2F-14).

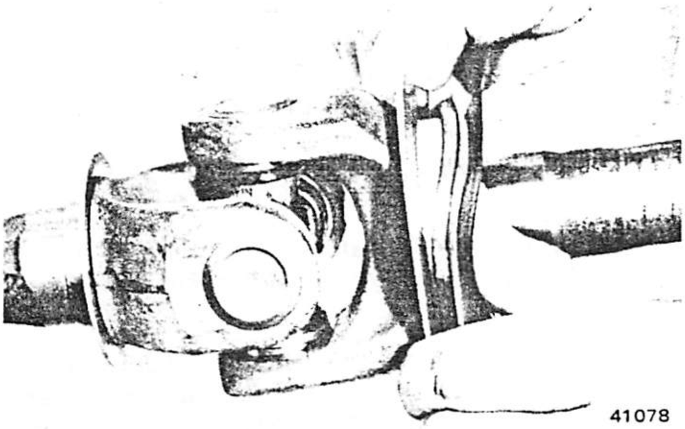

Fig. 2F-14 Axle Shaft Seal Installation

(3) Remove bronze thrust washer. If washer is worn, replace it.

(4) Clean dirt and foreign matter from seal area.

(5) Install bronze washer with chamfered side toward axle shaft seal.

(6) Install replacement seal with seal lip facing spindle (fig. 2F-14).

(7) Pack wheel bearing lubricant around thrust face of shaft and seal and fill seal area of spindle with wheel bearing lubricant also.

(8) Install axle shaft. Refer to Axle Shaft-Installation procedure.

SPINDLE BEARING

Replacement

NOTE: *Front axle spindles are equipped with a needle roller bearing that is located in the spindle flange bore (fig. 2F-15).*

(1) Wrap machined surfaces of spindle with tape and mount spindle in vise. Do not clamp spindle in vise until protective tape is applied to spindle surfaces.

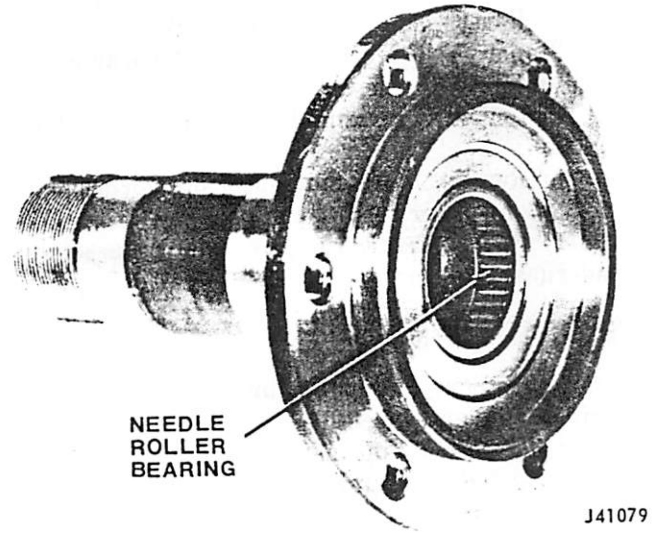

Fig. 2F-15 Spindle Bearing Location

(2) Remove needle bearing using internal-type puller.

(3) Clean dirt and foreign matter from spindle bearing surface.

(4) Install replacement bearing using bearing driver.

(5) Pack needle bearing with wheel bearing lubricant.

AXLE HOUSING INNER OIL SEAL

Model 30 and 44 front axles have inner oil seals that are located inside the housing. The seals are installed in counterbores machined into the shaft bores in the housing center section.

The axle housing inner seals are serviceable items but require differential removal in order to replace them. Refer to Differential Overhaul—Model 30-44-60 Axle in the Standard Differential section for removal/installation procedures.

AXLE REMOVAL

(1) Raise and support front end. Position frame stands under frame rails at rear of front springs.

(2) Remove wheels.

(3) Mark propeller shaft and axle yoke for assembly alignment reference.

(4) Disconnect propeller shaft at axle yoke. Secure shaft to frame rail using wire.

(5) Disconnect connecting rod at steering knuckles.

(6) Disconnect shock absorbers at axle housing.

(7) On vehicles equipped with stabilizer bar, remove nuts attaching stabilizer bar connecting links to spring tie plates.

(8) Disconnect breather tube at axle housing.

(9) Disconnect stabilizer bar link bolts at spring clips.

(10) Remove disc brake calipers, rotors, and brake shields. Refer to Chapter 2G.

(11) Remove U-bolts and tie plates.

(12) Support axle assembly on hydraulic jack and raise jack slightly to relieve spring tension.

(13) Loosen nuts attaching rear spring shackles to springs.

(14) Remove bolts attaching front spring shackles to springs and lower springs to floor.

(15) Remove hydraulic jack and axle assembly from underneath vehicle.

AXLE INSTALLATION

(1) Support axle assembly on hydraulic jack and position axle under vehicle.

(2) Raise springs and install shackle bolts in front springs and shackles. Install shackle bolt retaining nuts hand-tight.

(3) Lower hydraulic jack until axle is supported by front springs and rotate axle into position on springs.

(4) Install spring U-bolts and tie plates.

(5) On vehicles equipped with sway bar, mount sway bar connecting links on tie plates.

(6) Tighten spring shackle bolts to 24 foot-pounds (33 N•m) torque on CJ and Scrambler models and 100 foot-pounds (136 N•m) torque on all other models.

(7) On vehicles equipped with stabilizer bar, install nuts attaching stabilizer bar connecting links to tie plates.

(8) Tighten spring pivot bolts to 100 foot-pounds (136 N•m) torque on all models.

(9) Install brake shields, rotors, and brake calipers. Refer to Chapter 2G.

(10) Connect breather tube.

(11) Connect shock absorbers.

(12) Connect steering connecting rod at steering knuckles. Use replacement cotter pins to secure nuts.

(13) Connect propeller shaft to yoke. Align shaft and yoke using alignment marks made during removal.

(14) Install wheels.

(15) Remove support stands and lower vehicle.

(16) Tighten wheel retaining nuts and install wheel covers.

(17) Check front wheel alignment.

(18) Check turning angle.

TURNING ANGLE ADJUSTMENT

The turning angle stopscrews are located at the rear of the steering knuckle just above the axle centerline. If adjustment is necessary, proceed as follows.

(1) Loosen locknut on turning angle stopscrew.

(2) Using a turntable to measure angle, adjust stopscrew to obtain proper turning angle (see Specifications).

(3) Tighten stopscrew locknut.

NOTE: *Turning adjusting screw inward increases turning angle. Turning screw outward decreases turning angle.*

Turning Angle Specifications: On CJ-5 models, set turning angle at 29 degrees. On CJ-7 and Scrambler, set turning angle at 32 degrees. Cherokee, Wagoneer and Truck models, set the turning angle at 36 to 37 degrees.

SPECIFICATIONS

Front Axle Specifications

Axle Type:	
Model 30/44	Drive-type, full-floating axle with open end steering knuckles mounted on ball studs.
Axle Application:	
Model 30 Front Axle	CJ-5, CJ-7, Scrambler
Model 44 Front Axle	Cherokee, Wagoneer, Truck
Axle Ring Gear Diameter:	
Model 30	7.125-inches (18.09 cm)
Model 44	8.500-inches (21.59 cm)
Front Axle Lubricants:	Jeep Axle Lubricant or equivalent of SAE 85W-90, A.P.I. Grade GL-5 quality, Grade MIL-L-2105C.
Lubricant Capacity:	
Model 30	2.5 Pints (1.18 liters)
Model 44	3.0 Pints (1.41 liters)
Turning Angle:	
CJ-5	24 degrees
CJ-7, Scrambler	32 degrees
Cherokee, Wagoneer, Truck	36-37 degrees

80321

Torque Specifications

Service Set-To Torques should be used when assembling components. Service In-Use Recheck Torques should be used for checking a pre-tightened item.

	USA (ft-lbs)		Metric (N·m)	
	Service Set-To Torque	Service In-Use Recheck Torque	Service Set-To Torque	Service In-Use Recheck Torque
Axle Housing Cover Bolts	20	15-25	27	20-34
Connecting Rod-End Nut:				
CJ - Scrambler	40 min.	–	54 min.	–
Cherokee-Wagoneer-Truck	70 min.	–	95 min.	–
Lower Ball Stud Jam Nut:				
CJ - Scrambler	85	–	115 min.	–
Cherokee-Wagoneer-Truck	75	–	102 min.	–
Tie Rod-End Nut:				
CJ - Scrambler	40 min.	–	54 min.	–
Cherokee-Wagoneer-Truck	60 min.	–	81 min.	–
Shock Absorber Lower Mounting Stud Nut	45	35-50	61	48-68
Spring Pivot Bolts	100	80-120	136	109-163
Spring Shackle Bolts/Nuts:				
CJ - Scrambler	24	18-30	33	24-41
Cherokee-Wagoneer-Truck	100	80-120	136	109-163
Spring Clip U-Bolt Nuts:				
9/16-18	100	85-105	163	115-142
1/2-20	55	45-65	75	61-81
Upper Ball Stud Split Ring Seat	50	–	68	–
Upper Ball Stud Retaining Nut	100	–	136	–
Universal Joint Strap Bolt	16	15-19	22	20-26
Wheel Retaining Nuts	80	65-90	109	88-122

All torque values given in foot-pounds and newton-meters with dry fits unless otherwise specified.

Refer to the Standard Torque Specifications and Capscrew Markings Chart in Section A of this manual for any torque specifications not listed above.

80322

REAR AXLE

GENERAL

CJ and Scrambler models are equipped with the AMC/Jeep semi-floating rear axle with tapered axle shafts. This axle has an 8-7/8 inch (23 cm) diameter ring gear.

Cherokee, Wagoneer, and J-10 Truck models use an AMC/Jeep semi-floating rear axle which has flanged axle shafts. This axle has an 8-7/8 (23 cm) diameter ring gear. J-20 Truck models use the Model 60 full-floating rear axle.

IDENTIFICATION

On AMC/Jeep rear axles, the axle code letters are stamped on the right-side axle housing tube boss (fig. 2F-16). On Dana model 60 rear axles, the axle ratio is stamped on an I.D. tag attached to the axle housing cover. In addition to the ratios listed in the ratio and letter code chart, J-20 Truck models are also available with 3.73 ratio axles. The ring and pinion tooth combination for this ratio is 11/41.

J-20 Truck Axle

On the Model 60 rear axle, the model number is cast into a boss on the lower right side of the housing, adjacent to the housing cover.

The axle build date and manufacturer's part numbers are stamped on the right-hand axle tube, adjacent to the cover (fig. 2F-17). The build date of the axle is as follows. First number is the month, second number is the day of the month, third number is the year, the alpha-letter is the shift and the last number is the assembly line. If

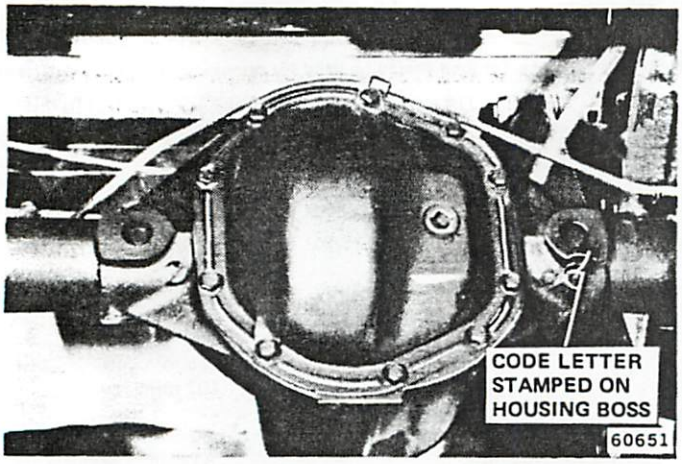

Fig. 2F-16 Axle Ratio Code Location—AMC/Jeep Axle

there are two build dates, the latter will be the date on which the brake components were installed.

AXLE HOUSING

The rear axle housing should be checked periodically for weld cracks and other damage that may cause loss of lubricant or affect driving characteristics.

If the vehicle is driven through water deep enough to cover the hubs, the wheel ends should be disassembled and inspected for water damage or contamination.

Examine, clean, and replace damaged parts before lubricating and assembling the wheel end components. Pay particular attention to the axle bearings, front spindle bearings and brake components.

AXLE HUB—CJ AND SCRAMBLER MODELS

Removal

(1) Remove axle shaft dust cap.

(2) Remove axle shaft nut and washer.

(3) Raise and support vehicle.

(4) Remove wheel and tire.

(5) Remove screws attaching brake drum to rear hub and remove drum.

(6) Install Puller Tool J-25109-01 on axle hub and remove hub (fig. 2F-18).

CAUTION: *Do not use a knockout or slide hammer-type puller to remove the hub. This type of puller may damage axle bearings, axle shaft, or differential thrust block.*

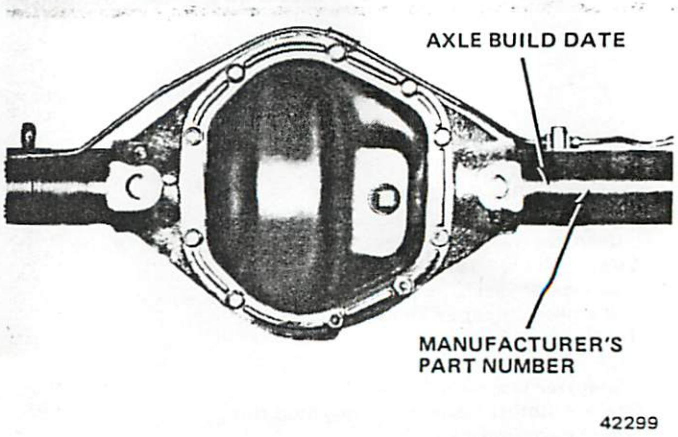

Fig. 2F-17 Axle Part Number and Build Date Code Location—Model 60 Axle

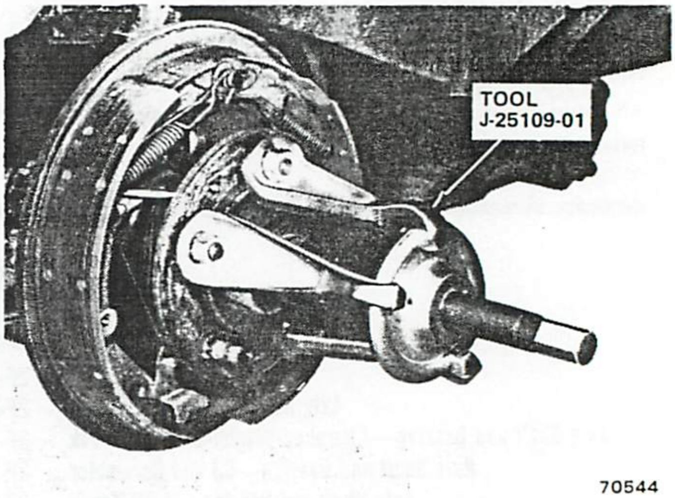

Fig. 2F-18 Axle Hub Removal—CJ and Scrambler Axle

Inspection

Inspect the hub for loose or distorted wheel lug studs. Inspect the keyway and tapered center bore for wear, damaged serrations, or cracks. Replace the hub if worn or damaged.

Installation

NOTE: *The procedures for installing an original hub and for installing a replacement hub are different. The installation procedures for both hub-types are as follows:*

Original Hub Installation

(1) Align keyway in hub with axle shaft key.

(2) Slide hub onto axle shaft as far as possible.

(3) Install axle shaft nut and washer.

(4) Install drum, drum retaining screws, and road wheel.

(5) Lower vehicle onto wheels.

(6) Tighten axle shaft nut to 250 foot-pounds (339 N•m) torque. If cotter pin hole is not aligned, tighten nut to the next castellation and install cotter pin. Do not loosen nut to align cotter pin hole.

NOTE: *When a replacement axle shaft is installed, a replacement hub must also be installed. However, a replacement hub may be installed on an original axle shaft if the serrations on the shaft are not worn or damaged.*

Replacement Hub Installation

(1) Align keyway in hub with axle shaft key.

(2) Lubricate two thrust washers with liberal amount of chassis lubricant and install washers on axle shaft.

(3) Install axle shaft nut.

(4) Install brake drum, drum retaining screws, and wheel.

(5) Lower vehicle onto wheels. Tighten axle shaft nut until distance from hub outer face to axle shaft outer end is 1-5/16 inches (33 mm) (fig. 2F-19).

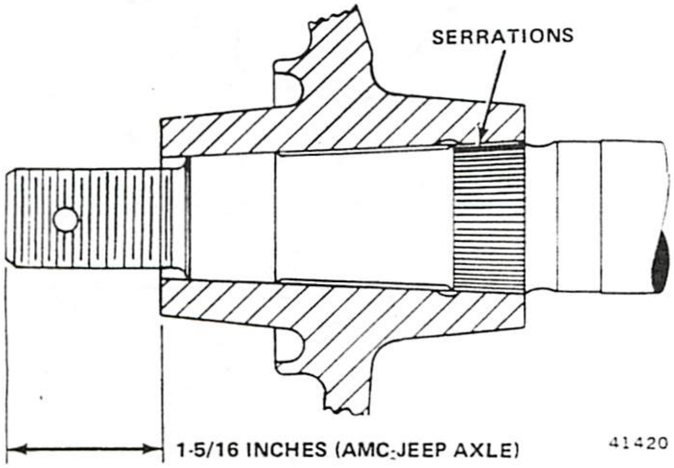

Fig. 2F-19 Replacement Hub Installation Measurement —CJ and Scrambler Axle

NOTE: *The hub must be pressed onto the axle shaft to the specified dimension in order to form the hub serrations properly.*

(6) Remove axle shaft nut and one thrust washer.

(7) Install axle shaft nut and tighten to 250 foot-pounds (339 N•m) torque. If cotter pin hole is not aligned, tighten nut to next castellation and install cotter pin. Do not loosen nut to align cotter pin hole.

AXLE SHAFT AND BEARING—CJ AND *SCRAMBLER* AXLE

Removal

(1) Remove rear wheel, drum, and hub as outlined under Axle Hub—CJ and Scrambler Models.

(2) Disconnect parking brake cable at equalizer.

(3) Disconnect brake line at wheel cylinder and remove brake support plate assembly, oil seal, and shims from axle shaft.

NOTE: *If both axle shafts are removed, keep the shims separated. Axle shaft end play is adjusted on the left side only.*

(4) Remove axle shaft and bearing using Tool J-2498 (fig. 2F-20).

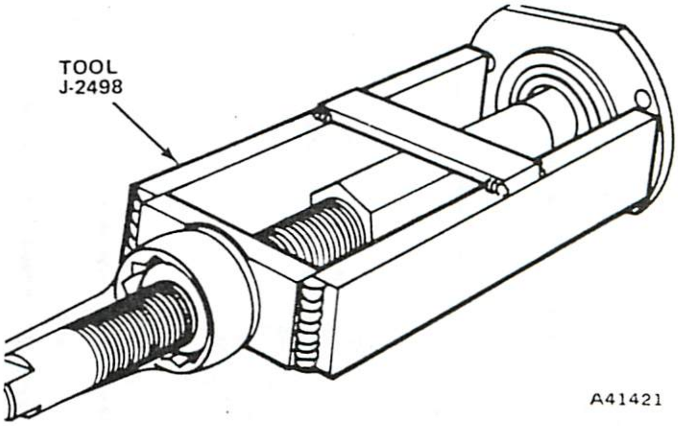

Fig. 2F-20 Axle Shaft Removal—CJ and Scrambler Models

CAUTION: *On models equipped with a Trac-Lok differential, do not rotate the differential gears unless both axle shafts are in place. If one shaft is removed and remaining shaft is rotated, the side gear splines will become misaligned and prevent installation of the replacement shaft.*

(5) Remove and discard axle shaft inner oil seal.

(6) Remove axle shaft bearing if bearing is worn or damaged.

NOTE: *The bearing is a press-fit on the axle shaft and must be removed using an arbor press only (fig. 2F-21). Do not attempt to remove the bearing by any other method.*

Installation

NOTE: *Tapered shaft axle bearings do not have any provision for lubrication after assembly and must be packed with a high quality wheel bearing lubricant before installation.*

(1) If axle shaft bearing is to be replaced, pack bearing with generous amount of wheel bearing lubricant

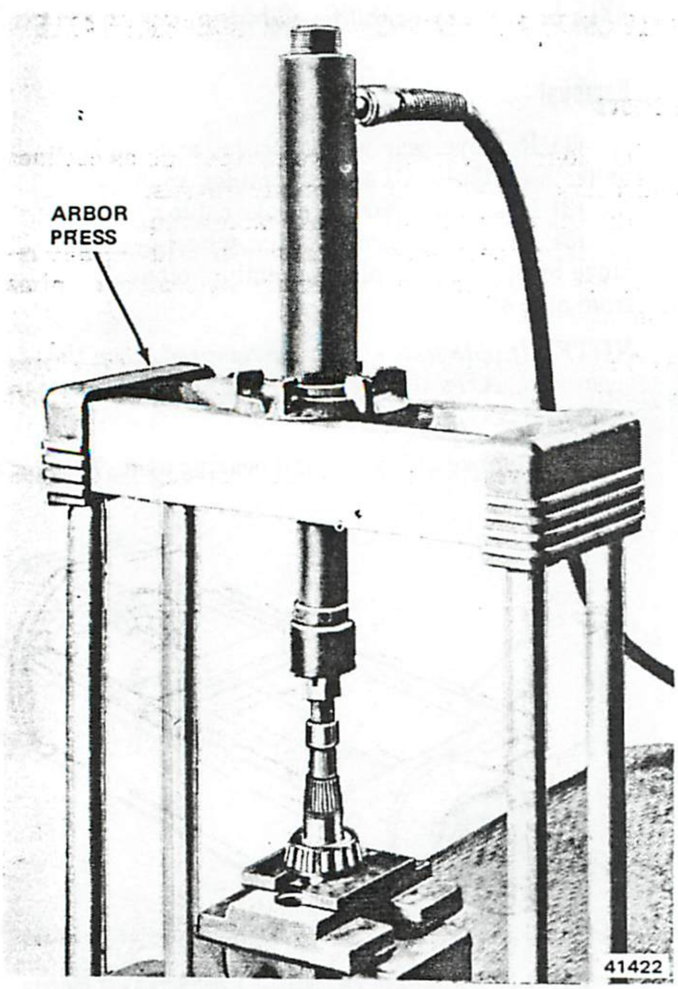

Fig. 2F-21 Axle Shaft Bearing Removal—CJ and Scrambler Models

and press bearing onto shaft. Small diameter of bearing must face toward outer tapered end of shaft.

(2) Coat inner seal with oil.

(3) Coat outer surface of seal metal retainer with nonhardening sealer.

(4) Install inner oil seal using Seal Installer J-21788 (fig. 2F-22).

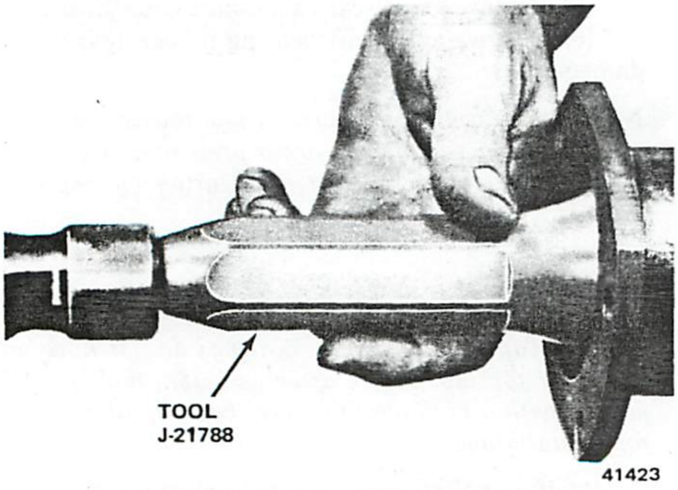

Fig. 2F-22 Inner Oil Seal Installation—CJ and Scrambler Models

(5) Install axle shaft. Align shaft splines with differential side gear splines and insert shaft into gear.

(6) Install outer bearing cup.

(7) Inspect brake support plate for elongated bolt holes. Replace support plate if necessary.

NOTE: *During assembly, apply a silicone-type sealer to the axle tube flange and brake support plate mounting area to prevent entry of dust and water.*

(8) Install original axle end play shims, oil seal assembly, and brake support plate. Tighten attaching bolts to 35 foot-pounds (47 N•m) torque.

NOTE: *The oil seal and retainer are located on the outside of the brake support plate.*

End Play Adjustment—CJ and Scrambler Axle Shaft

Axle shaft end play is adjusted at the left side axle shaft only.

(1) Strike end of each axle shaft with lead hammer to seat bearing cups against support plate.

(2) Attach Axle Shaft End Play Tool J-2092 to end of left side axle shaft. Mount dial indicator on support plate or tool, and check end play while pushing and pulling on axle shaft (fig. 2F-23).

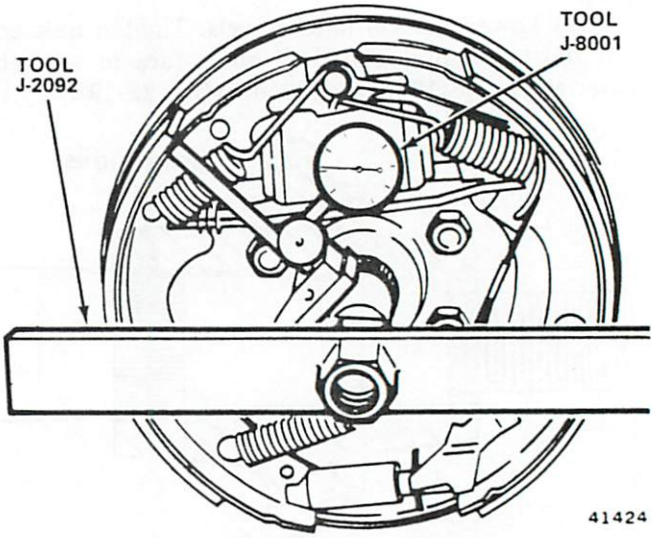

Fig. 2F-23 Measuring Axle Shaft End Play —CJ and Scrambler Models

(3) End play should be 0.004 to 0.008 inch (0.10 to 0.20 mm), 0.006 inch (0.15 mm) is desired.

(4) Add shims to increase end play, or remove shims to decrease end play.

(5) Install axle hub and brakedrum as outlined under Rear Axle Hub—Installation.

(6) After axle shaft end play is checked and corrected, adjust brakes. Refer to Chapter 2G.

AXLE SHAFT AND BEARING—CHEROKEE-WAGONEER-TRUCK AXLES

Removal—Cherokee-Wagoneer-J-10 Truck

(1) Raise and support vehicle and remove wheels.

(2) Remove brakedrum.

(3) Remove nuts attaching support plate and retainer to axle tube flange using access hole in axle shaft flange.

(4) Assemble Adapter Tool J-21579 and Slide Hammer J-2619-01, install tools on axle shaft flange, and remove axle shaft (fig. 2F-24).

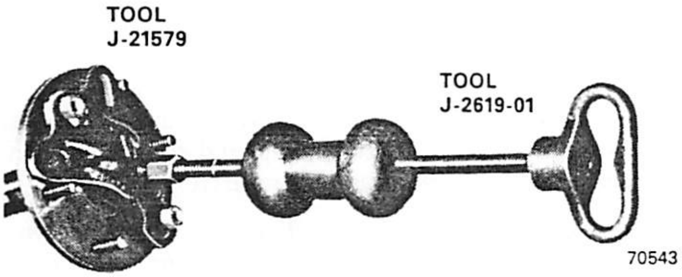

Fig. 2F-24 Axle Shaft Removal—Cherokee-Wagoneer-J-10 Truck

(5) If cup portion of wheel bearing assembly remains in axle housing after axle shaft is removed, remove bearing cups using Tools J-2619-01 and J-26941.

(6) Remove axle shaft oil seal from axle housing tube.

Axle Shaft Bearing Replacement

CAUTION: *Under no circumstances should the axle shaft retaining ring or bearing be removed using a torch. Heat will transfer into the axle shaft bearing journal and weaken it.*

(1) Mount axle shaft in vise. Use protective jaws on vise to prevent scratching or damaging shaft.

(2) Drill 1/4 inch (6 mm) diameter hole in retaining ring. Hole depth should be approximately 3/4 of ring thickness.

CAUTION: *Do not allow drill to contact axle shaft.*

(3) Position chisel over drilled hole in retaining ring. Cut deep groove in retaining ring using chisel. This will enlarge ring, or split it, allowing ring to be removed from axle shaft (fig. 2F-25).

(4) Slide retaining plate and oil seal toward axle shaft. This provides room for bearing removal tool between seal and bearing.

(5) Remove axle shaft bearing using arbor press and Tool J-22912-01 or J-23674 (fig. 2F-26).

(6) Inspect axle shaft bearing and seal surfaces for scratches. Remove scratches using crocus cloth.

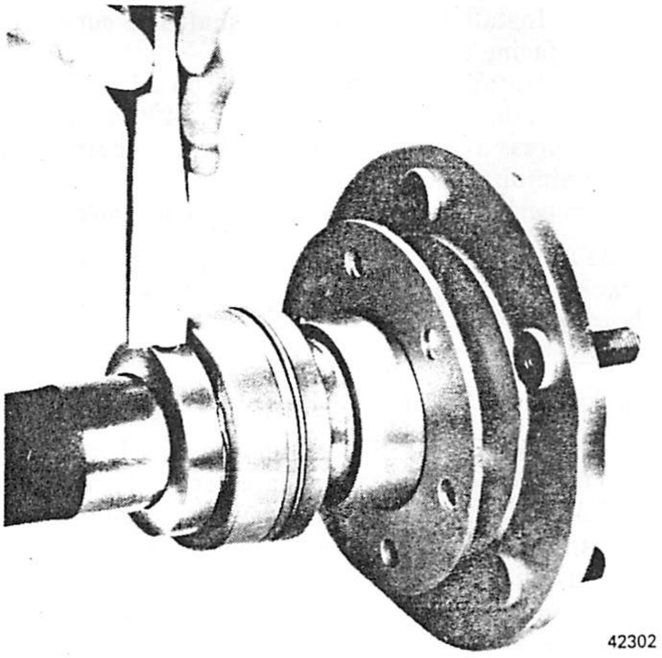

Fig. 2F-25 Notching Bearing Retaining Ring—Cherokee-Wagoneer-J-10 Truck Axle

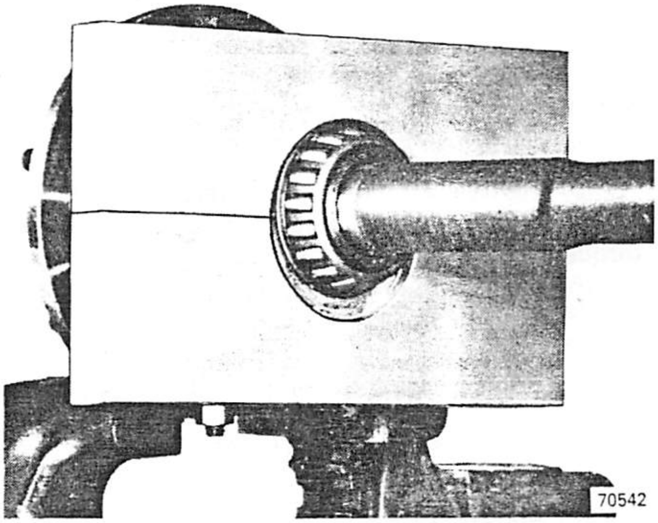

Fig. 2F-26 Axle Shaft Bearing Removal—Cherokee-Wagoneer-J-10 Truck Axle

(7) Install retainer plate on axle shaft.

(8) Pack wheel bearing lubricant in oil seal cavity and between seal lips and install seal on axle shaft seal seat. Outer face of seal must face axle flange.

NOTE: *Prevent damage to the seal by lubricating seal lips before installation. The seal lips, when seal is installed, must contact the machined portion of the axle shaft only.*

(9) Pack replacement bearing with wheel bearing lubricant. Force lubricant through cup rib ring end until it appears at opposite end, around bearing.

(10) Install bearing on axle shaft. Be sure cup rib ring is facing axle flange.

(11) Install bearing retainer ring on axle shaft.

(12) Using Tool J-22912-01 or J-23674 and arbor press, press axle shaft bearing and retainer ring on axle shaft simultaneously. Be sure bearing and retainer ring are properly seated against axle shaft shoulder.

NOTE: *When the seal and bearing seat against each other, some lubricant should be forced out of the bearing.*

Installation—Cherokee-Wagoneer-J-10 Truck

(1) Clean inner oil seal and bearing bores in axle housing tube and install replacement inner seal using Tool J-25135-01. Next, apply wheel bearing lubricant to seal and to bottom 1/3 of cavity between seal and bearing bore shoulder.

(2) Apply thin coating of wheel bearing lubricant to outside diameter of wheel bearing cup and outer oil seal.

CAUTION: *Take care to avoid damaging the oil seal when installing the shaft.*

(3) Insert splined end of shaft into differential side gears and start cup rib rings and seals into axle tube.

(4) Align retainer plate and bolts and push axle shaft into housing as far as possible. Install nuts on bolts finger-tight only.

NOTE: *The outer oil seal must be squarely seated against the bearing.*

(5) Tighten all nuts alternately and evenly in a cross pattern to approximately 15 foot-pounds (20 Nm) torque to seal the cup rib ring evenly in axle tube.

(6) Tighten nuts to final torque of 50 foot-pounds (68 N•m) torque in a cross pattern.

(7) Install rear brake drum, locknuts and wheels. Tighten rear wheel nuts to 72 foot-pounds (98 N•m) torque.

(8) Remove supports and lower vehicle.

Removal—J-20 Truck

NOTE: *It is not necessary to raise the wheels in order to remove the axle shafts on Model 60 full-floating rear axles.*

(1) Remove axle flange nuts, lockwashers, and split washers retaining axle shaft flange.

(2) Remove axle shaft from housing.

Installation—J-20 Truck

(1) Be sure axle flange mating area on hub and axle are clean and free of old gasket material.

(2) Install replacement flange gasket on hub studs.

(3) Insert axle shaft into housing.

NOTE: *It will be necessary to rotate the axle shaft to simultaneously align the shaft splines with the differential gear splines and the flange attaching holes with the hub studs.*

(4) Install split washers, lockwashers, and flange bolts. Tighten bolts.

PINION SEAL AND YOKE—CJ-SCRAMBLER-CHEROKEE-WAGONEER-J-10 TRUCK

Removal

(1) Raise and support vehicle.

(2) Remove rear wheels and brake drums.

(3) Mark propeller shaft and rear axle yokes for assembly alignment reference.

(4) Disconnect propeller shaft at rear axle yoke.

(5) Rotate drive pinion several revolutions using Socket Tool J-22575 and inch-pound torque wrench to measure torque required to turn drive pinion.

NOTE: *The torque required to turn the drive pinion must be recorded for reference at time of assembly.*

(6) Remove pinion nut using Tool J-8614-01 (fig. 2F-3). Discard pinion nut.

(7) Mark yoke and pinion for alignment reference at time of assembly.

(8) Remove yoke using Tools J-8614-01, -02, -03 (fig. 2F-4).

(9) Inspect seal surface of yoke. If surface is damaged or grooved, replace yoke.

(10) Remove pinion seal using Tool J-9233 (fig. 2F-27).

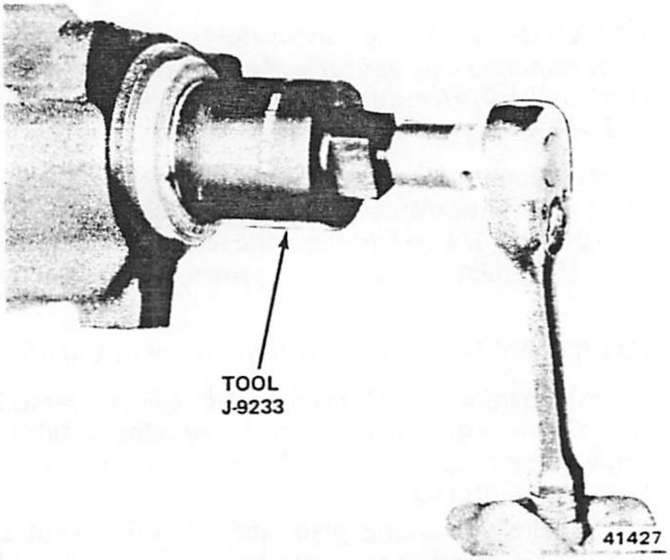

Fig. 2F-27 Pinion Seal Removal

(11) Before installing replacement seal, coat seal lip with rear axle lubricant.

(12) Install seal using Tool J-22661 (fig. 2F-28).

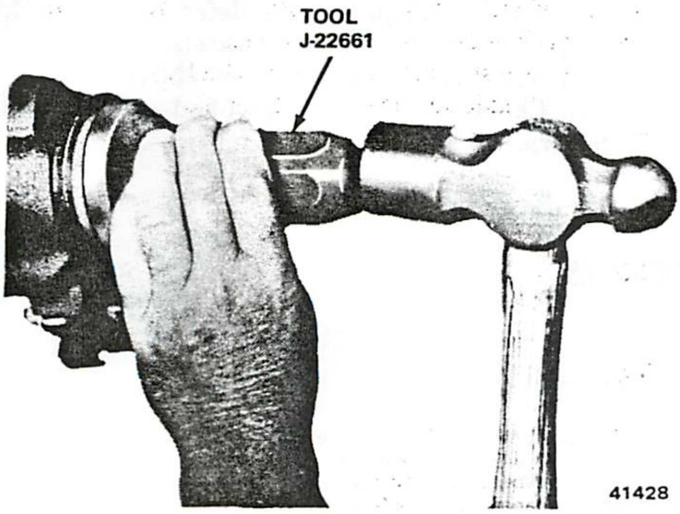

Fig. 2F-28 Pinion Seal Installation

(13) Install yoke on pinion. Note alignment marks.

(14) Install replacement pinion nut. Tighten nut using Tools J-8614-01 and J-22575 to remove pinion bearing end play only. **Do not overtighten nut.**

(15) Check torque required to turn pinion gear. Pinion gear must be turned several revolutions to obtain accurate torque reading. Refer to torque reading recorded during disassembly and add 5 inch-pounds (0.56 N•m) more torque to this amount for correct preload torque.

(16) If preload torque is less than desired amount, which should equal disassembly torque reading plus 5 inch-pounds (0.56 N•m), tighten pinion nut slightly and recheck torque.

(17) Repeat gradual tightening procedure until desired torque is attained. **Do not loosen and retighten nut.**

CAUTION: *Do not overtighten the pinion nut. If the desired torque is exceeded, a replacement collapsible pinion spacer sleeve must be installed and the pinion gear preload reset. Refer to Differential Overhaul.*

(18) Install propeller shaft. Align index marks made at disassembly

(19) Install rear brake drums and wheels.

(20) Remove supports and lower vehicle.

PINION SEAL AND YOKE—MODEL 44 AND 60 AXLE

Removal

(1) Raise and support vehicle.

(2) Index propeller shaft to front yoke for assembly reference and disconnect shaft at yoke.

(3) Remove pinion nut and washer using Tool J-8614-01 (fig. 2F-3).

(4) Remove yoke using Tools J-8614-01, -02, -03 (fig. 2F-4).

(5) Remove pinion seal using Tool J-25180 on Model 44 axle or Tool J-25144 on Model 60 axle.

Installation

(1) Install replacement pinion seal using Tool J-25104.

(2) Install yoke on pinion.

(3) Install pinion washer and nut. Tighten nut to 210 foot-pounds (285 N•m) torque on Model 44 axle and 260 foot-pounds (352 N•m) torque on Model 60 axle.

(4) Align index marks on propeller shaft and yoke and install shaft. Tighten strip clamp bolts to 16 foot-pounds (22 N•m) torque or tighten flange bolts to 35 foot-pounds (47 N•m) torque.

(5) Remove supports and lower vehicle.

REAR AXLE REMOVAL

(1) Raise vehicle and position support stands under frame rails just forward of rear springs.

(2) Remove wheels.

(3) Mark propeller shaft and axle for assembly alignment reference.

(4) Disconnect propeller shaft at rear axle yoke.

(5) Disconnect shock absorbers at axle tubes.

(6) Disconnect brake hydraulic hose at rear axle tee fitting. Tape ends of hose and fitting to prevent dirt entry.

(7) Disconnect parking brake cable at equalizer.

(8) Support axle using hydraulic jack.

(9) Remove U-bolts. On vehicle with spring-mounted above axle, disconnect spring at rear shackle.

(10) Slide axle from under vehicle.

REAR AXLE INSTALLATION

NOTE: *All service replacement axle assemblies are shipped from the factory without lubricant in the differential. Lubricant must be added to the differential before the axle is installed. Use Jeep Axle Lubricant, or equivalent, marked SAE 85W-90 gear lubricant, grade API GL-5.*

When adding differential lubricant, be sure the pinion bearings receive lubricant. Suspend the axle so the axle shafts are in a horizontal position and the yoke end of the pinion housing is facing downward. Then, turn the pinion gear several times so lubricant will reach the pinion bearings.

(1) Support axle assembly on hydraulic jack and position assembly under vehicle.

(2) Align springs with axle spring pads, and install U-bolts and nuts. On vehicles with spring mounted above axle, position spring on shackles and install bolts but do not tighten bolts completely.

(3) Attach brake line hose at tee fitting on top of housing.

(4) Connect parking brake cables.

(5) Connect shock absorbers to axle tubes.

(6) Install propeller shaft. Align reference marks made during removal.

(7) Bleed and adjust brakes. Refer to Chapter 2G.

(8) Install brake drums and wheels.

(9) Remove supports and lower vehicle.

(10) Check axle lubricant level and add lubricant as necessary.

SPECIFICATIONS

Rear Axle Specifications

Axle Type:	
Model 60	Drive-type, full-floating axle with flange-type axle.
AMC/Jeep	Drive-type, semi-floating axle with tapered axle shaft.
Axle Application:	
Model 60 Rear Axle	J-20 Truck
AMC/Jeep Rear Axle	CJ, Cherokee, Wagoneer and J-10 Truck
Axle Ring Gear Diameter:	
Model 60	9.750-inches (24.38 cm)
AMC/Jeep	8.875-inches (22.19 cm)
Rear Axle Lubricants:	Jeep Axle Lubricant or equivalent of SAE 85W-90 A.P.I. Grade GL-5 quality, or axle lubricant grade MIL-L-2105 C
Lubricant Capacity:	
Model 60	6.0 Pints (2.84 liters)
AMC/Jeep	4.75 Pints (2.25 liters)

80324

Torque Specifications

Service Set-To Torques should be used when assembling components. Service In-Use Recheck Torques should be used for checking a pre-tightened item.

	USA (ft-lbs)		Metric (N·m)	
	Service Set-To Torque	**Service In-Use Recheck Torque**	**Service Set-To Torque**	**Service In-Use Recheck Torque**
Axle Hub-To-Shaft Nut (AMC-Jeep Axle)-CJ - Scrambler	205 min.	—	278 min.	—
Axle Housing Cover Bolts	20	15-25	27	20-34
Brake Support Plate Bolts:				
AMC/Jeep-Cherokee, Wagoneer and J-10 Truck	30	25-35	41	34-47
Model 60	50	45-55	68	61-75
AMC/Jeep	32	25-40	43	34-47
Pinion Nut:				
Model 60	260	250-270	353	339-366
AMC/Jeep	17-25 in-lbs	—	2-3	—
Shock Absorber Lower Stud Nut	45	35-50	61	47-68
Spring Clip U-Bolt Nut:				
9/16-18	100	85-105	136	115-142
1/2-20	55	45-65	75	61-88
Spring Shackle Bolt/Nuts:				
CJ-Scrambler	24	18-30	33	24-41
Cherokee-Wagoneer-Truck	100	80-120	136	115-163
Spring Pivot Bolts/Nuts (All)	100	80-120	136	115-163
Styled Wheel Hub Cap	32 in-lbs	24-40 in-lbs	4	3-5
Universal Joint Clamp Strap Bolts	16	15-19	22	20-26
Universal Joint Flange Bolts/Nuts	35	25-45	47	34-61
Wheel Retaining Nuts:				
Model 60	120	110-150	163	149-203
AMC/Jeep	80	65-90	108	88-108

All Torque values given in foot-pounds and newton-meters with dry fits unless otherwise specified.

80325

STANDARD DIFFERENTIAL

GENERAL

CJ and Scrambler models use the Model 30 front axle and an AMC/ Jeep rear axle which has tapered axle shafts.

Cherokee, Wagoneer, and J-10 Truck models use the Model 44F front axle and an AMC/Jeep rear axle with flanged axle shafts. Truck models rated at 6800 GVWR (3084 kg) and up use the Model 44F front axle and the Model 60 rear axle with full-floating axle shafts.

The AMC/Jeep rear axles are semi-floating type axles. Only the Model 60 is a full-floating type unit.

DIFFERENTIAL OPERATION

The differential gear system divides incoming torque between the axle shafts allowing them to rotate at different speeds when turning corners.

Each differential side gear is splined to an axle shaft. The pinion gears are mounted on a pinion mate shaft and are free to rotate on the shaft. The pinion gear is fitted in a bore in the differential case and is positioned at a right angle to the axle shafts.

In operation, power flow occurs as follows: The pinion gear rotates the ring gear. The ring gear, which is bolted to the differential case, rotates the case. The differential pinion gears, which are mounted on the pinion mate shaft, which is fitted in the case, rotate the side gears. The side gears, which are splined to the axle shafts, rotate the shafts.

During straight-ahead driving, the differential pinion gears do not rotate on the pinion mate shaft. This occurs because input torque applied to the gears is divided and distributed equally between the two side gears. As a result, the pinion gears revolve with the pinion mate shaft but do not rotate around it (fig. 2F-29).

When turning corners, the outside wheel must travel a greater distance than the inside wheel in order to complete the turn. This difference must be compensated for in order to prevent the wheels from scuffing and sliding through the turn. To accomplish this, the differential becomes effective allowing the axle shafts to rotate at unequal speeds (fig. 2F-30). In this instance, the input torque applied to the pinion gears is not divided equally. The pinion gears now rotate around the pinion mate shaft in opposite directions. This allows the side gear and axle shaft attached to the outside wheel to rotate at a faster speed.

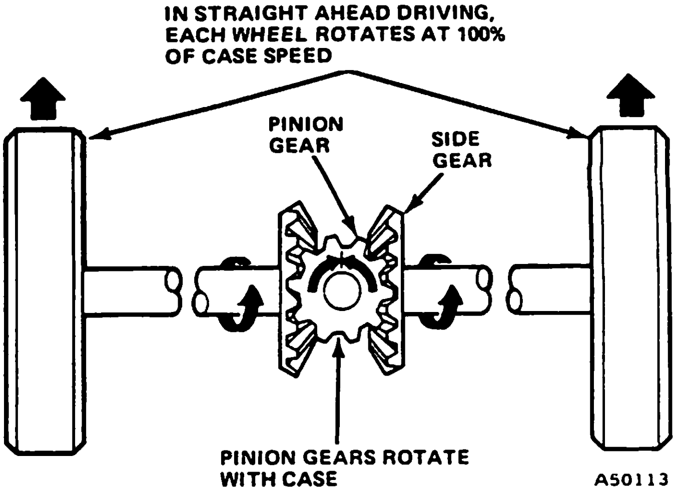

Fig. 2F-29 Differential Operation—Straight Ahead Driving

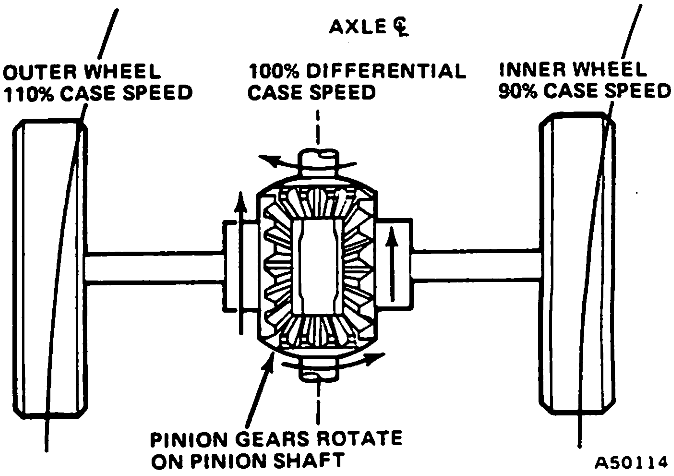

Fig. 2F-30 Differential Operation—On Turns

DIFFERENTIAL OVERHAUL—AMC/JEEP REAR AXLES

Differential Disassembly

NOTE: *It is not necessary to remove the rear axle assembly in order to overhaul the differential. Refer to figure 2F-31 for parts nomenclature during overhaul.*

(1) Remove axle shaft dust caps and retaining nuts.
(2) Raise and support vehicle.
(3) Remove axle housing cover and drain lubricant.

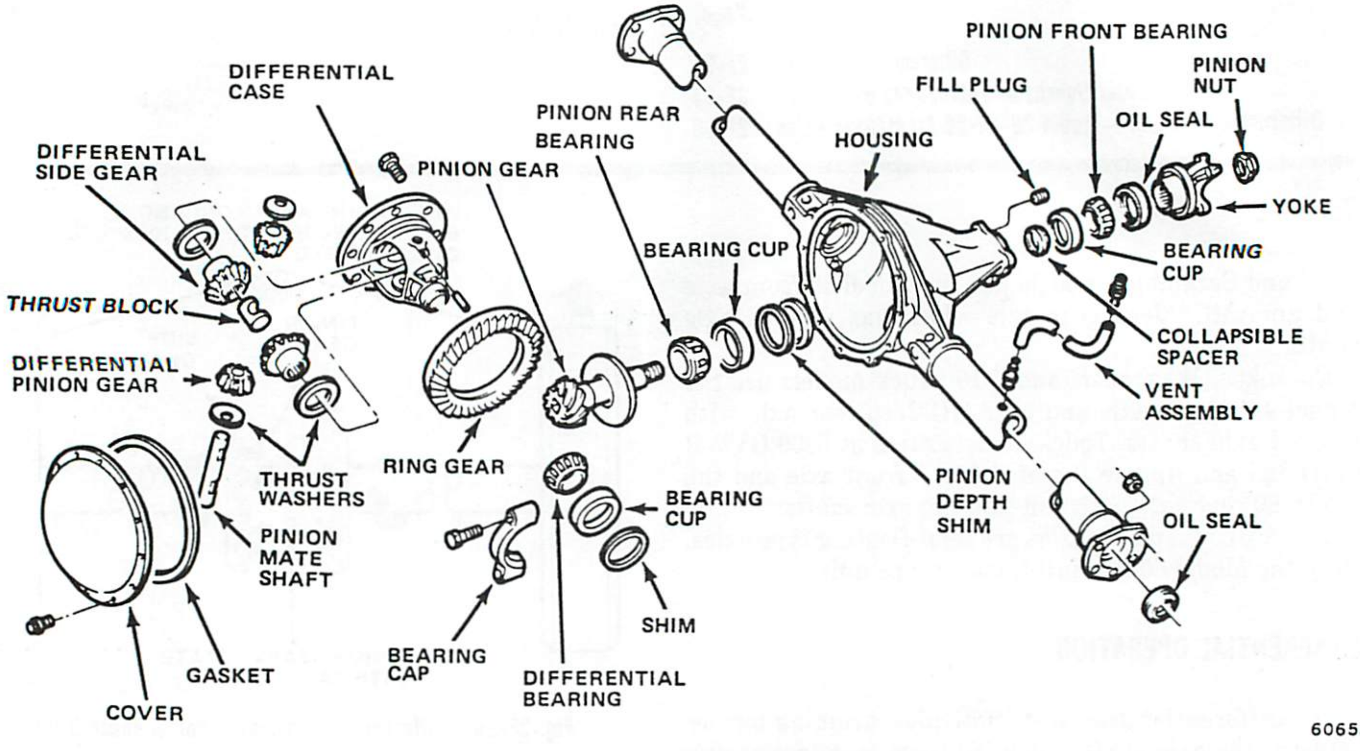

Fig. 2F-31 AMC/Jeep Rear Axle

(4) Remove wheels, brake drums, hubs, axle shafts, and seals. Keep left and right-side axle parts separated.

(5) Mark bearing caps with center punch for assembly reference.

(6) Loosen bearing cap bolts until only several threads are engaged, then pull bearing caps away from bearings. This will prevent differential from falling out and sustaining damage when pried from axle housing.

(7) Pry differential loose in axle housing.

(8) Remove bearing caps and remove differential.

(9) Tie differential bearing shims to their respective bearing caps and cups to prevent misplacement.

Differential Bearing Removal

Use Puller J-29721 and adapters to remove the differential bearings (fig. 2F-32). When using this tool, be sure the differential case is secure. When the bearing is removed the differential case can drop if not supported.

Ring Gear Removal

(1) Remove ring gear-to-differential case bolts.

(2) Remove ring gear from case. Use brass drift and hammer to tap ring gear from case. Do not nick ring gear face of differential case or drop gear.

CAUTION: *Do not chisel or wedge the gear from the case.*

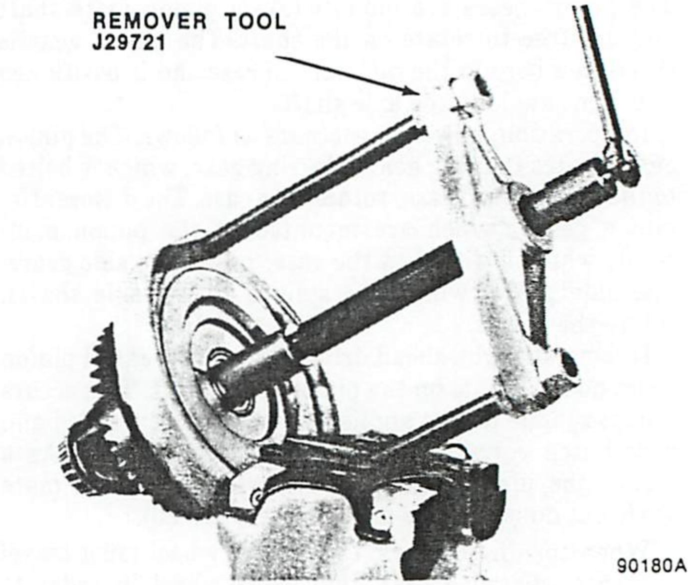

Fig. 2F-32 Differential Bearing Removal

Pinion Mate Shaft Removal

(1) Remove pinion mate shaft lockpin using 3/16-inch (5 mm) diameter drift at least 3 inches (8 cm) long (fig. 2F-33).

(2) Remove pinion mate shaft and remove thrust block (fig. 2F-34).

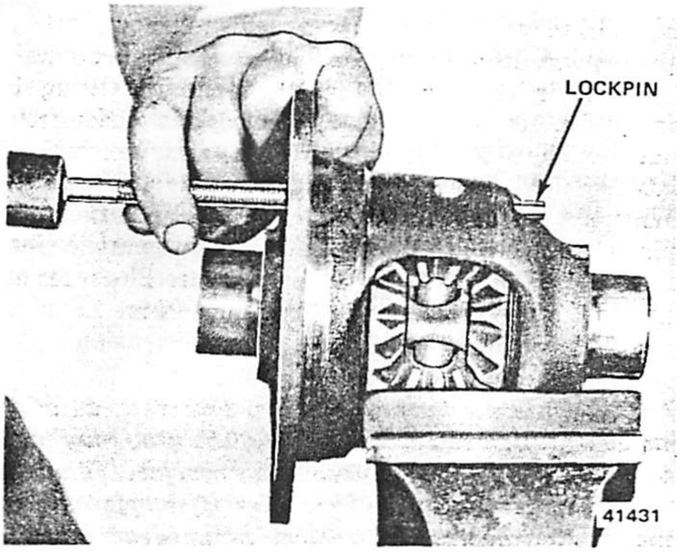

Fig. 2F-33 Pinion Mate Shaft Lockpin Removal

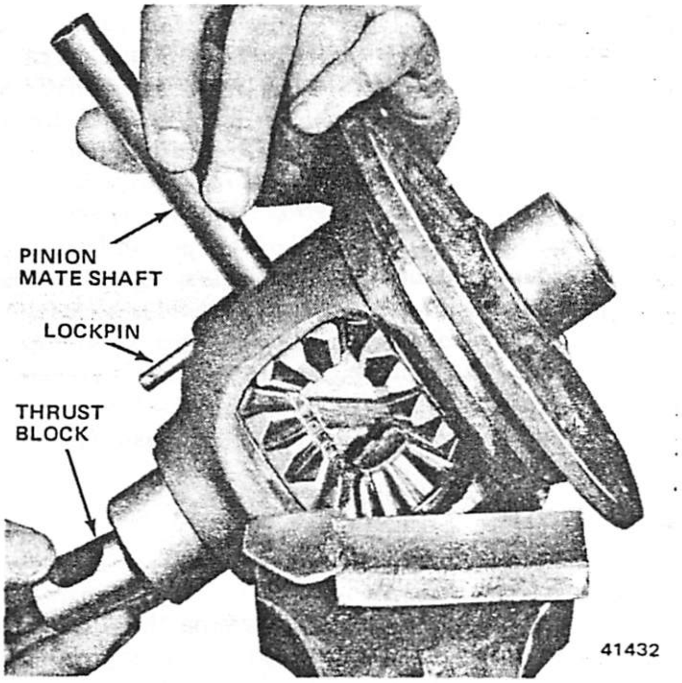

Fig. 2F-34 Pinion Mate Shaft and Thrust Block Removal

(3) Rotate pinion gears on side gears until pinion gears are aligned with case opening. Remove pinion gears and thrust washers and remove side gears and thrust washers.

Pinon Gear Removal

(1) Remove pinion nut using Tool J-8614-01 (fig. 2F-3).

(2) Remove yoke using Tools J-8614-01, -02, -03 (fig. 2F-4).

(3) Reinstall axle housing cover to prevent pinion gear from falling out when gear is driven out of bearings and housing. Loosely attach cover using two bolts.

(4) Remove pinion seal.

(5) Tap end of pinion gear with rawhide mallet to drive pinion gear out of front bearing. Remove front bearing and collapsible spacer. Discard spacer.

CAUTION: *The collapsible spacer is used to control pinion bearing preload. Discard this spacer after removal, it is not reusable.*

(6) Remove axle housing cover and remove pinion gear and rear bearing from housing.

Pinion Bearing Cup Removal

(1) Remove rear bearing cup using Tools J-8092 and J-21786.

NOTE: *The pinion gear depth adjustment shims are located under the rear bearing cup. Tag these shims for assembly reference.*

(2) Remove front bearing cup using Tools J-8092 and J-21787.

CAUTION: *Keep the bearing cup remover tool seated squarely on the cup to prevent damaging the cup bores during removal.*

Cleaning and Inspection

Clean all parts in solvent. Allow bearings to air dry. Dry other parts with compressed air.

Inspect the differential bearing cones, cups, and rollers for pitting, galling, flat spots, or cracks.

Inspect the differential case for an elongated or enlarged pinion mate shaft hole. The machined thrust washer surface areas and counterbores must be smooth and free of nicks, gouges, cracks, or burrs. Inspect the differential case for cracks or other visible damage which would necessitate replacement.

Inspect the pinion mate shaft for excessive wear in the contact area of the differential pinions. The shaft should be smooth and concentric and not scored or galled.

Inspect the differential side gears and pinions; they should have smooth teeth with a uniform contact pattern but not display excessive wear or broken surfaces. The side gear and pinion thrust washers should be smooth and free from any scoring or metal pickup.

Inspect the pinion mate shaft lockpin for damage or looseness in the case. Replace the pin or case as necessary.

Inspect the ring and pinion gears for worn or chipped teeth or damaged attaching bolt threads. If replacement is necessary, replace the ring gear and pinion as a matched set only.

Inspect the pinion bearing cones, cups, and rollers for pitting, galling, excessive wear, or other visible damage. Replace any part that exhibits any of these conditions.

Inspect the axle housing for cracks, porosity, bent or loose tubes, or other damage. In addition, if raised metal was created on the pinion bearing cup bore shoulders during cup removal, flatten it using a blunt punch.

Inspect the pinion gear for damaged bearing journals, damaged shim surfaces, or excessively worn splines. If pinion replacement is necessary, replace both the pinion gear and ring gear as a matched set only.

Inspect the pinion yoke for cracks, worn splines, and a pitted, rough, or corroded oil seal contact surface. Repair or replace the yoke as necessary.

Inspect the pinion gear depth adjustment shims for being broken, damaged, or distorted. Replace the shims as necessary before adjusting pinion gear depth.

Differential Assembly

Pinion Gear Installation and Depth Adjustment

Pinion gear depth is the distance (measured in inches) from the end (bottom) face of the pinion gear to the centerline of the axle shafts (fig. 2F-35). This dimension is controlled by shims installed between the pinion gear rear bearing cup and axle housing (fig. 2F-35).

Ring and pinion sets are factory tested to detect machining variances. Tests are started at a standard setting which is then varied to obtain the most desirable tooth contact pattern and quiet operation. When this setting is determined, the ring and pinion gear are etched with identifying numbers (fig. 2F-36).

The ring gear receives one number. The pinion gear receives two numbers which are separated by a plus (+) or minus (-) sign.

The second number on the pinion gear indicates pinion position, in relation to the centerline of the axle shafts, where tooth contact was best and gear operation was quietest. This number represents pinion depth variance and indicates the amount, in thousandths of an inch, that the gear set varied from the standard setting. The number on the ring gear and first number on the pinion gear identify the gears as a matched set. Do not attempt to use a ring and pinion set having differing numbers. This is not a matched set.

The standard setting for AMC/Jeep axles is 2.547 inches (6.46 cm). If the pinion is marked +2, the gear set varied from standard by +0.002 inches (0.05 mm) and will require 0.002 inch (0.05 mm) less shims than a gear set marked zero (0). When a gear set is marked plus (+), the distance from the pinion end face to the axle shaft centerline must be more than the standard setting. If the pinion gear is marked -3, the gear set varied from standard by 0.003 inches (0.07 mm) and will require 0.003 (0.07 mm) more shims than a set marked zero (0). When a set is marked minus (-), the distance from the pinion end face to the axle shaft centerline must be less than the standard setting. Refer to figure 2F-35 for an illustration of the standard setting dimension.

NOTE: *On some factory installed gear sets, an additional 0.010 or 0.020 inches (0.25 or 0.50 mm) may have been machined off the pinion gear bottom face. This does not affect gear operation but does affect pinion gear marking and depth measurement. Pinion gears machined in this fashion have different identifying numbers. For example, if the pinion is marked +23, the number 2 indicates that 0.020 (0.050 mm) was removed from the pinion bottom face and the number 3 indicates that variance from the standard setting is +0.003 (0.07 mm). If the pinion is marked +16, the number 1 indicates that 0.010 (0.25 mm) was removed from the pinion bottom face and the number 6 indicates that variance from the standard setting is +0.006 (0.15 mm). Gear sets with additional amounts machined off the pinion bottom face are factory installed items exclusively. All service replacement gear sets will be machined to standard settings only. In addition, replacement gear sets marked + or −0.009 (0.22 mm) or more, or sets with mismatched identifying numbers must be returned to the parts distribution center. Do not attempt to install these gear sets.*

Pinion Variance Chart

This chart will help to determine the approximate "starter shim" thickness needed for initial pinion depth measurement. However, the chart will not provide the exact shim thickness required for final adjustment and must not be used as a substitute for an actual pinion depth measurement.

To use the chart, proceed as follows:

(a) Measure thickness of original pinion depth shim.

(b) Note pinion depth variance numbers marked on old and new pinion gears.

(c) Refer to Old and New Pinion Marking columns in chart. Chart box where old and new pinion depth variances intersect will provide approximate amount of change required to achieve desired starter shim thickness.

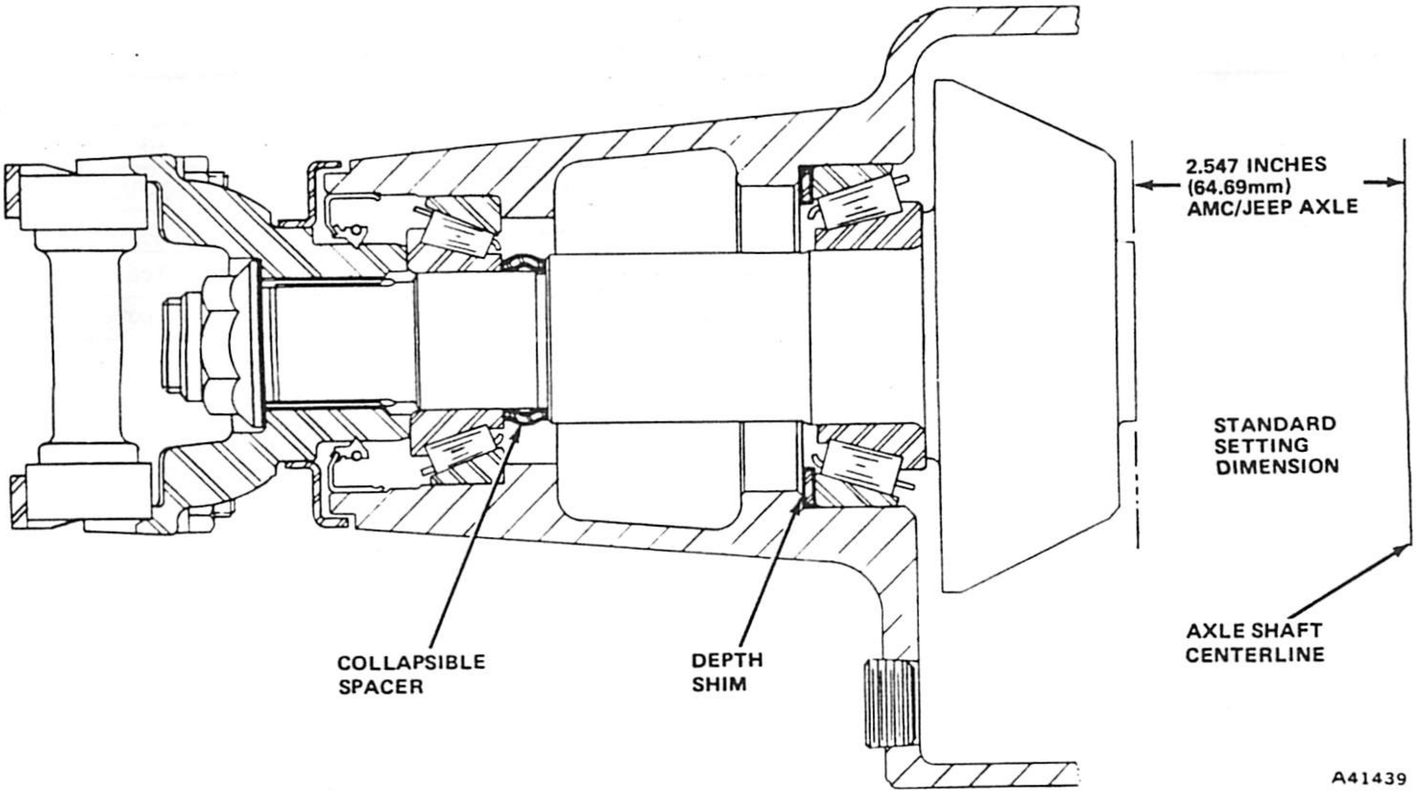

Fig. 2F-35 Standard Setting Dimension and Pinion Depth Shim Location—AMC/Jeep Axle

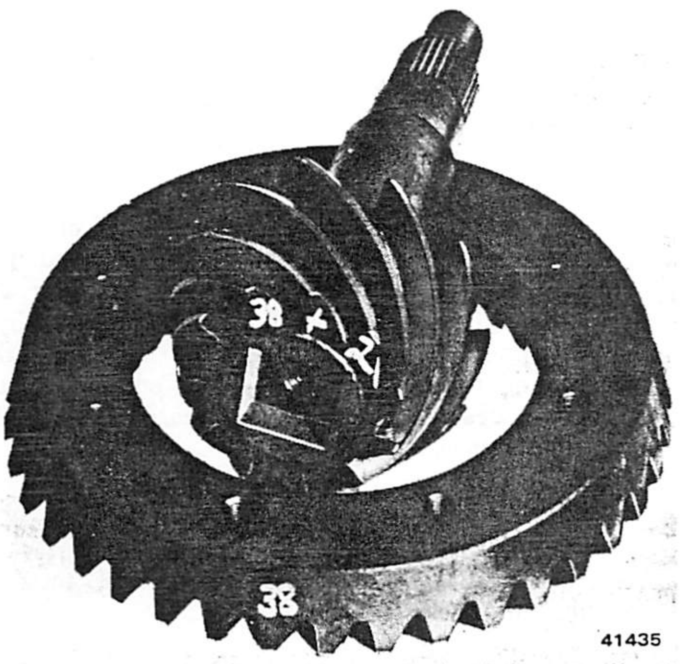

Fig. 2F-36 Ring and Pinion Gear Markings

For example, if the old pinion is marked -3 and the new pinion +2, chart procedure would be as follows: Refer to Old Pinion Marking column at left side of chart and locate -3 figure in this column. Then read to right, across chart, until under +2 figure in New Pinion Marking column. Box where two columns intersect is amount of shim thickness change required. In this case, the number in the intersecting box is -0.005 (0.12 mm) which represents the amount to be subtracted from the old shim thickness. If the box number had been a + figure, this amount would be added to the old shim thickness.

(1) Measure thickness of pinion depth shim removed during disassembly.

(2) Note pinion depth variance numbers marked on old and new pinion gears.

(3) Refer to Pinion Variance Chart and determine amount to be added or subtracted from original shim for desired starter shim thickness.

NOTE: *Do not use the starter shim thickness determined by the pinion variance chart as the final shim setting. The actual pinion depth measurement must be performed and final shim thickness adjusted as necessary.*

(4) Install rear bearing on pinion gear with large diameter of bearing cage facing gear end of pinion. Press bearing against rear face of gear.

Pinion Variance Chart

Old Pinion Marking	New Pinion Marking								
	−4	−3	−2	−1	0	+1	+2	+3	+4
+4	+0.008	+0.007	+0.006	+0.005	+0.004	+0.003	+0.002	+0.001	0
+3	+0.007	+0.006	+0.005	+0.004	+0.003	+0.002	+0.001	0	−0.001
+2	+0.006	+0.005	+0.004	+0.003	+0.002	+0.001	0	−0.001	−0.002
+1	+0.005	+0.004	+0.003	+0.002	+0.001	0	−0.001	−0.002	−0.003
0	+0.004	+0.003	+0.002	+0.001	0	−0.001	−0.002	−0.003	−0.004
−1	+0.003	+0.002	+0.001	0	−0.001	−0.002	−0.003	−0.004	−0.005
−2	+0.002	+0.001	0	−0.001	−0.002	−0.003	−0.004	−0.005	−0.006
−3	+0.001	0	−0.001	−0.002	−0.003	−0.004	−0.005	−0.006	−0.007
−4	0	−0.001	−0.002	−0.003	−0.004	−0.005	−0.006	−0.007	−0.008

80702

(5) Clean pinion bearing bores in axle housing thoroughly. This is important to obtaining correct pinion gear depth adjustment.

(6) Install starter pinion depth shim in housing rear bearing cup bore. Be sure shim is centered in bearing cup bore.

NOTE: *If the shim is chamfered, be sure the chamfered side faces the bottom of the bearing cup bore.*

(7) Install rear bearing cup using Tools J-8092 and J-8608 (fig. 2F-37).

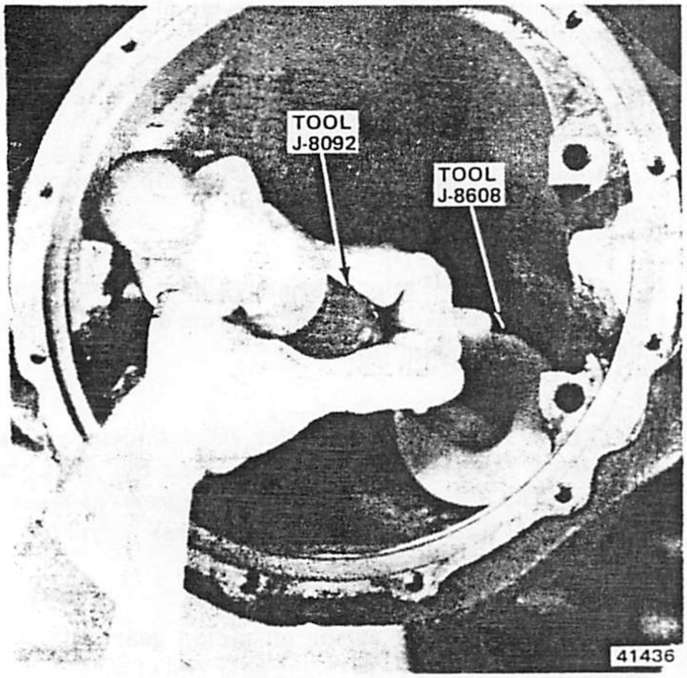

Fig. 2F-37 Pinion Rear Bearing Cup Installation

(8) Install front bearing cup using Tools J-8092 and J-8611-01.

(9) Install pinion gear in rear bearing cup.

(10) Install front bearing, rear universal joint yoke, and original pinion nut on pinion gear. **Tighten pinion nut only enough to remove bearing end play.**

NOTE: *Do not install a replacement pinion nut and collapsible spacer at this time as the pinion gear will be removed after depth measurement.*

(11) Note pinion depth variance marked on pinion gear. If number is preceded by a plus (+) sign, add that amount (in thousands) to standard setting for axle model being overhauled. If number is preceded by a minus (-) sign, subtract that amount (in thousandths) from standard setting. Result of this addition or subtraction is **desired pinion depth.** Record this figure for future reference.

(12) Assemble Arbor Tool J-5223-4 and Discs J-5223-23 and install assembled tools in differential bearing cup bores (fig. 2F-38). Be sure discs are completely seated in bearing cup bores.

(13) Install bearing caps over discs and install bearing cap bolts (fig. 2F-38). Tighten bearing cap bolts securely, but not to specified torque.

(14) Position Gauge Block J-5223-20 on end face of pinion gear with anvil end of gauge block seated on gear and gauge plunger underneath Arbor Tool J-5223-4 (fig. 2F-39).

(15) Assemble and mount Clamp J-5223-14 and Bolt J-5223-24 on axle housing (fig. 2F-38). Use axle housing cover bolt to attach clamp to housing.

(16) Extend clamp bolt until it presses against gauge block with enough force to prevent gauge block from moving.

(17) Loosen gauge block thumbscrew to release gauge block plunger. When plunger contacts arbor tool, tighten thumbscrew to lock plunger in position. Do not disturb plunger position.

(18) Remove clamp and bolt assembly from axle housing.

(19) Remove gauge block and measure distance from end of anvil to end of plunger using a 2 to 3 inch (5 to 8 cm) micrometer (fig. 2F-39). This dimension represents the **measured pinion depth**. Record this dimension for assembly reference.

(20) Remove bearing caps and remove arbor tool and discs from axle housing.

(21) Remove pinion gear, rear bearing cup, and pinion depth shim from axle housing.

(22) Measure thickness of depth shim used in step (10). Add this dimension to measured pinion depth obtained in step (8). From this total, subtract desired pinion depth. Result represents correct shim thickness required.

NOTE: *The desired pinion depth is the standard setting plus or minus the pinion depth variance.*

(23) Following examples will illustrate procedure for determining correct shim thickness.

Example I—Pinion Depth Variance is Plus (+)

Step 1—Determine desired pinion depth

Add pinion depth variance (marked on pinion gear) to standard setting. Result is desired pinion depth.

Standard Setting	2.547 (6.46 cm)
Pinion Depth Variance	+0.007 (0.17 mm)
Desired Pinion Depth =	2.554 (6.48 cm)

Step 2—Determine total measured pinion depth

Add measured pinion depth to measured shim thickness. Result is total measured pinion depth.

Measured Pinion Depth	2.550 (6.47 cm)
Starter Shim Thickness	+0.098 (2.48 mm)
Total Measured Pinion Depth =	2.648 (6.72 cm)

Step 3—Determine correct shim thickness

Subtract desired pinion depth from total measured pinion depth. Result is correct shim thickness.

Total Measured Pinion Depth	2.648 (6.72 cm)
Desired Pinion Depth	-2.554 (6.48 cm)
Correct Shim Thickness =	0.094 (2.38 mm)

Example II—Pinion Depth Variance is Minus (-)

Step 1—Obtain desired pinion depth

Subtract pinion depth variance (marked on pinion gear) from standard setting. Result is desired pinion depth.

Standard Setting	2.547 (6.46 cm)
Pinion Depth Variance	-0.003 (0.07 mm)
Desired Pinion Depth =	2.544 (6.46 cm)

Step 2—Determine total measured pinion depth

Add measured pinion depth to measured shim thickness. Result equals total measured pinion depth.

Measured Pinion Depth	2.542 (6.45 cm)
Starter Shim Thickness	+0.096 (2.43 mm)
Total Measured Pinion Depth =	2.638 (6.70 cm)

Step 3—Determine correct shim thickness

Subtract desired pinion depth from total measured pinion depth. Result is correct shim thickness.

Total Measured Pinion Depth	2.638 (6.70 cm)
Desired Pinion Depth	-2.544 (6.46 cm)
Correct Shim Thickness =	0.094 (2.38 mm)

Pinion Gear Bearing Preload Adjustment

(1) Install correct thickness pinion depth shim(s) in axle housing bearing cup bore.

(2) Install rear bearing cup and pinion gear.

(3) Install replacement collapsible spacer and front bearing on pinion gear.

CAUTION: *The collapsible spacer controls pinion bearing preload. Do not reuse the old spacer. Use a replacement spacer only.*

(4) Install pinion oil seal using tool J-22661 (fig. 2F-28).

(5) Install pinion yoke and replacement pinion nut. **Tighten pinion nut finger-tight only.**

(6) Tighten pinion nut **only enough to remove end play and seat pinion bearings.** Use tool J-22575 to tighten nut and use tool J-8614-01 to hold yoke while tightening nut. Rotate pinion while tightening nut to seat bearings evenly.

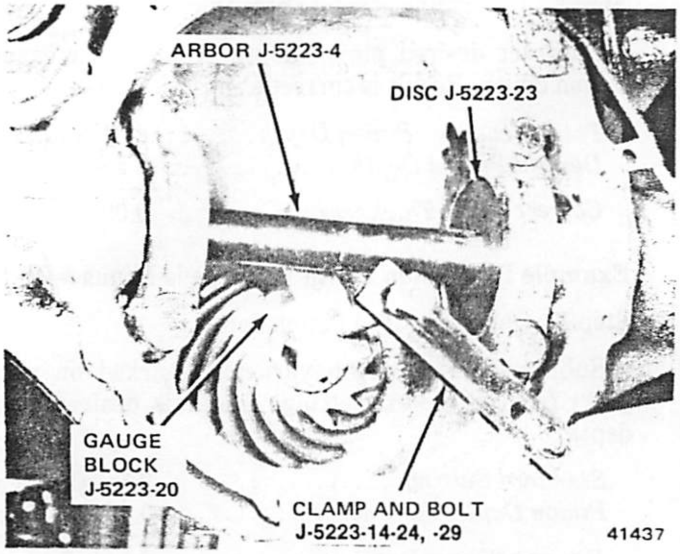

Fig. 2F-38 Installing Pinion Depth Gauge Tools

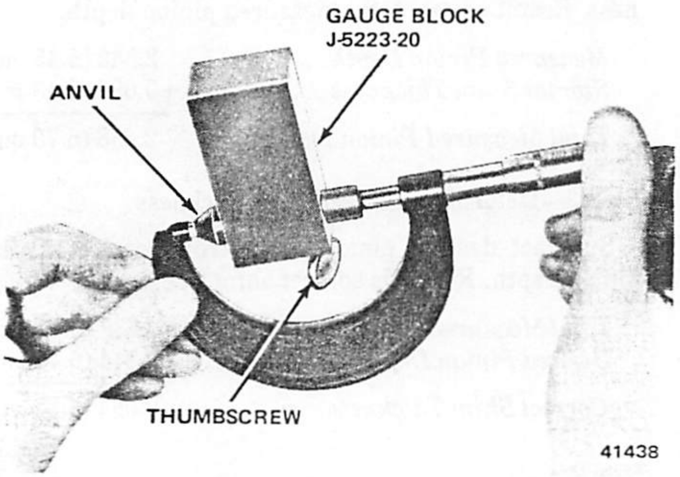

Fig. 2F-39 Measuring Gauge Block

(7) Remove Tools J-8614-01 and J-22575.

(8) Measure torque required to turn pinion gear using an inch-pound torque wrench and Tool J-22575. Correct pinion bearing preload torque is 17 to 25 inch-pounds (2 to 3 N•m) torque. Continue tightening pinion nut until required preload torque is obtained.

CAUTION: *Do not exceed the specified preload torque and do not loosen the nut to reduce preload torque if the specified torque is exceeded.*

(9) If pinion bearing preload torque is exceeded, remove pinion gear, replace collapsible spacer and pinion nut, and adjust preload again.

Differential Case Assembly

(1) Install differential bearings on case using Tools J-21784 and J-8092 (fig. 2F-40).

(2) Install thrust washers on differential side gears and install gears in differential case.

(3) Install differential pinion gears in case. Install thrust washers behind pinion gears and align pinion gear bores.

(4) Rotate differential side and pinion gears until pinion mate shaft bores in pinion gears are aligned with shaft bores in case.

(5) Install thrust block in case. Insert block through side gear bore. Align bore in block with *pinion* mate shaft bores in pinion gears and case.

(6) Install pinion mate shaft. Align lockpin bore in shaft with bore in case and *install shaft* lockpin.

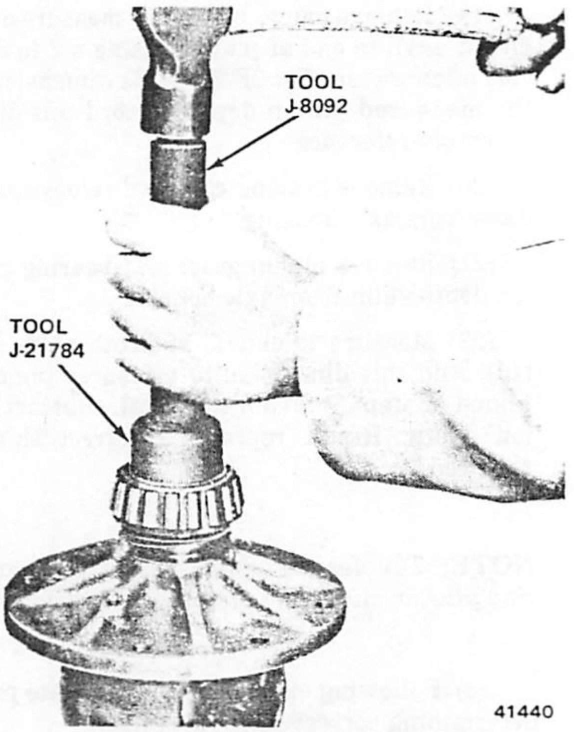

Fig. 2F-40 Differential Bearing Installation

Differential Bearing Adjustment

(1) Place bearing cup over each differential bearing and install differential case assembly in axle housing.

(2) Install shim on each side between bearing cup and housing. Use 0.080 inch (2 mm) shims as starting point (fig. 2F-41).

(3) Install bearing caps and tighten bolts finger-tight. Mount Dial Indicator J-8001 on housing (fig. 2F-42).

(4) Using two screwdrivers, pry between shims and housing. Pry assembly to one side and zero indicator then pry assembly to opposite side and read indicator.

NOTE: *Do not zero or read indicator while prying.*

(5) Amount read on indicator is shim thickness that should be added to arrive at zero preload and zero end play. Repeat procedure to ensure accuracy and adjust if necessary.

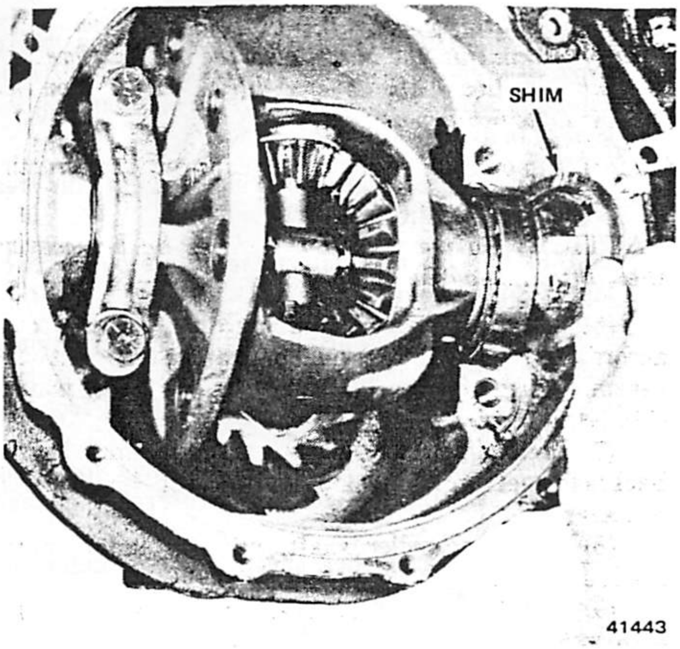

Fig. 2F-41 Adjusting Sideplay

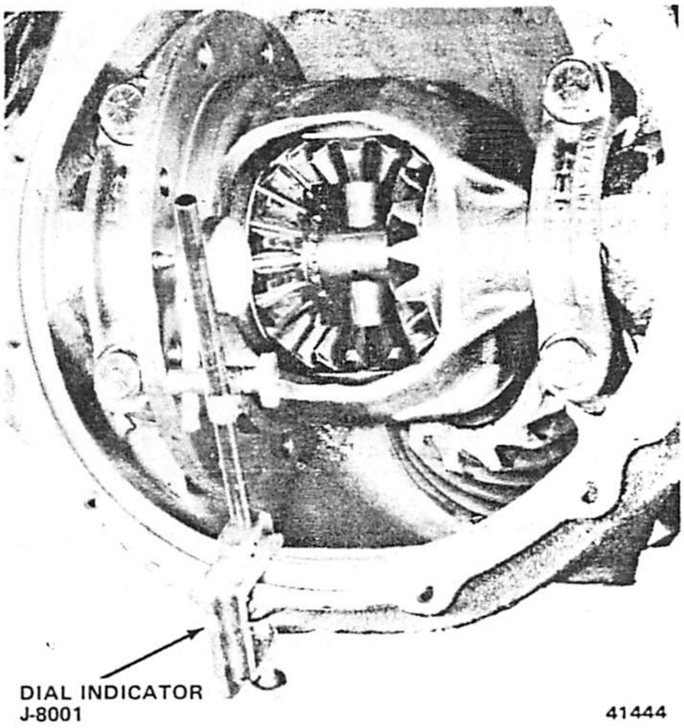

Fig. 2F-42 Checking Ring Gear Mounting Surface of Case for Runout

(6) Shims are available in thicknesses from 0.080 to 0.110 inch (0.25 mm) in 0.002 inch (0.05 mm) increments.

(7) When sideplay is eliminated, a slight bearing drag will be noticed. Install bearing caps and tighten bearing cap bolts to 87 foot-pounds (118 N•m) torque.

(8) Attach dial indicator to axle housing and check ring gear mounting face of differential case for runout (fig. 2F-42). Runout should not exceed 0.002 inch (0.05 mm).

(9) Remove case from housing. Retain shims used to adjust sideplay.

Ring Gear Installation

(1) Position ring gear on differential case.

(2) Install two ring gear bolts in opposite holes and tighten bolts to pull gear into position.

(3) Install remaining ring gear attaching bolts. Tighten bolts to 55 foot-pounds (75 N•m) torque.

Ring and Pinion Gear Backlash Adjustment

(1) Position shims previously selected to remove differential bearing sideplay on bearing cups and install differential assembly in axle housing.

(2) Install bearing cap bolts and tighten bolts to 87 foot-pounds (118 N•m) torque.

(3) Attach dial indicator to housing. Position indicator so indicator stylus contacts drive side of a ring gear tooth and at right angle to tooth (fig. 2F-43).

(4) Move ring gear back and forth and note movement registered on dial indicator. Ring gear backlash should be 0.005 to 0.009 inch (0.12 to 0.22 mm), with 0.008 inch (0.20 mm) desired.

(5) Adjust backlash as follows: to increase backlash, install thinner shim on ring gear side and thicker shim on opposite side. To decrease backlash, reverse procedure, however, do not change total thickness of shims. **Example:** Sideplay was removed using 0.090 inch (2.28 mm) shims on each side totaling 0.180 inch (4.57 mm).

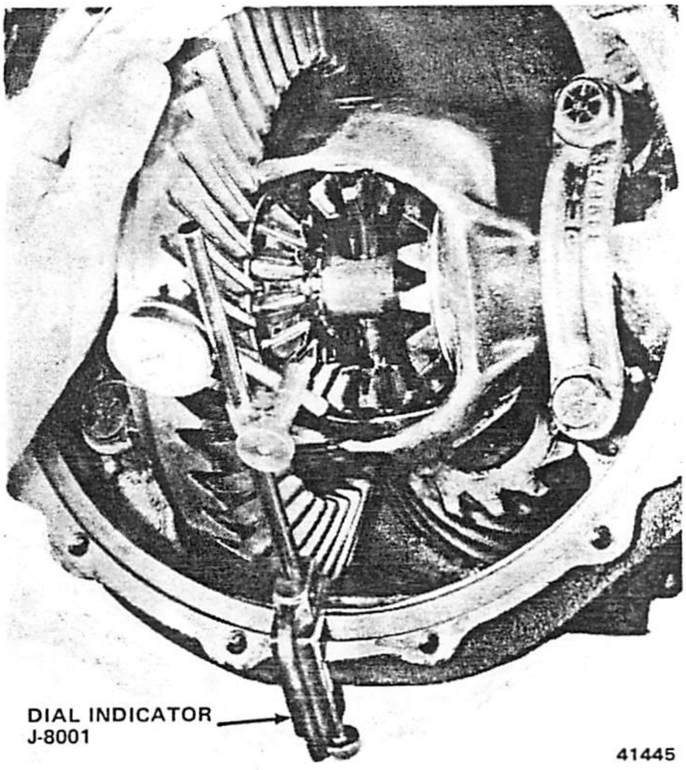

Fig. 2F-43 Checking Backlash

Backlash is checked and found to be 0.011 inch (0.27 mm). To correct backlash, add 0.004 inch (0.10 mm) to shim on ring gear side and subtract 0.004 inch (0.10 mm) from shim on opposite side. This will result in 0.094 inch (2.38 mm) shim on ring gear side and 0.086 inch (2.18 mm) shim on other side. Backlash will be approximately 0.007 to 0.008 inch (0.17 to 0.20 mm). Total shim thickness remains 0.180 inch (4.57 mm).

Differential Bearing Preload Adjustment

NOTE: *Differential bearings must be preloaded to compensate for heat and loads during operation. The differential bearings are preloaded by increasing shim pack thickness at each side of the differential by 0.004 inch (0.10 mm) for a total of 0.008 inch (0.20 mm).*

(1) Remove differential assembly from housing. Be sure to keep differential bearing shim packs together for proper assembly.

(2) Reinstall differential bearing shims in axle housing bearing bores.

(3) Install differential bearing cups on differential bearings. Cups should cover differential bearing rollers completely.

(4) Position differential assembly in housing so bearings just start into housing bearing bores (fig. 2F-44).

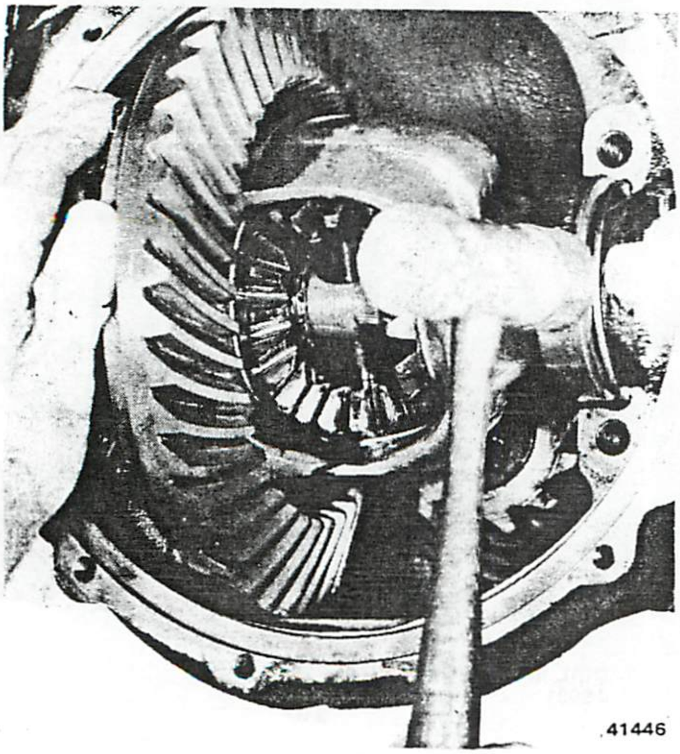

Fig. 2F-44 Differential Installation

NOTE: *Slightly tipping the bearing cups will ease starting them into the bores. also keep the differential assembly square in the housing during installation and push it in as far as possible.*

(5) Tap outer edge of bearing cups until differential is seated in housing.

CAUTION: *Do not distort the shims by hammering them into the housing.*

(6) Install differential bearing caps. Position caps according to alignment punch marks made at disassembly. Tighten bearing cap bolts to 87 foot-pounds (118 N•m) torque.

(7) Preloading differential bearings may change backlash setting. Check and correct backlash if necessary.

(8) Install propeller shaft, aligning index marks made at disassembly.

(9) Install axle shafts, bearings, seals, and brake support plates.

(10) Fill rear axle with Jeep Axle lubricant or equivalent marked SAE 85W-90, grade API GL-5.

(11) Check and adjust axle shaft end play if necessary. Adjust end play at left side of axle shaft only.

(12) Install hubs, drums, and wheels.

(13) Lower vehicle.

DIFFERENTIAL OVERHAUL—MODEL 30-44-60 FRONT/ REAR AXLES

Disassembly

NOTE: *It is not necessary to remove the axle assembly to overhaul the differential. Refer to figures 2F-45 and 2F-46 for parts nomenclature during overhaul.*

(1) Raise vehicle, drain lubricant and remove axle shafts.

NOTE: *On CJ and Scrambler models lower right spring. On Cherokee, Wagoneer and Truck models, lower left spring at front shackle only so spreader tool can be installed.*

(2) Remove front shock absorber at tie plate only.

(3) Remove stabilizer bar connecting link to tie plate attaching nut.

(4) Remove U-bolts and tie plate.

(5) Loosen nuts attaching rear spring shackle to spring.

(6) Support axle housing with jackstand.

(7) Remove bolts attaching spring shackle to spring and lower spring.

(8) Remove axle housing cover.

(9) Mark differential bearing caps for assembly alignment reference. Use centerpunch to mark caps.

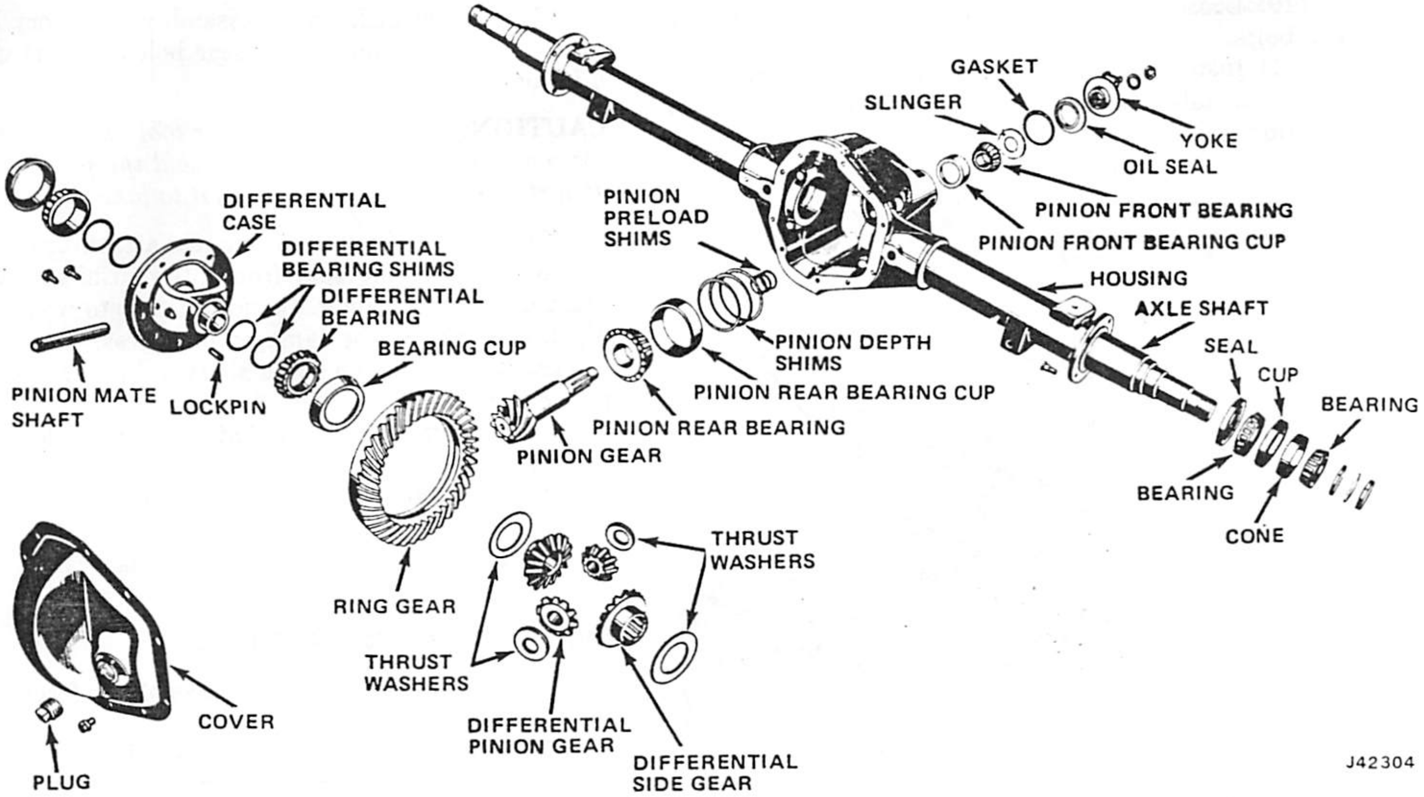

Fig. 2F-45 Model 60 Rear Axle

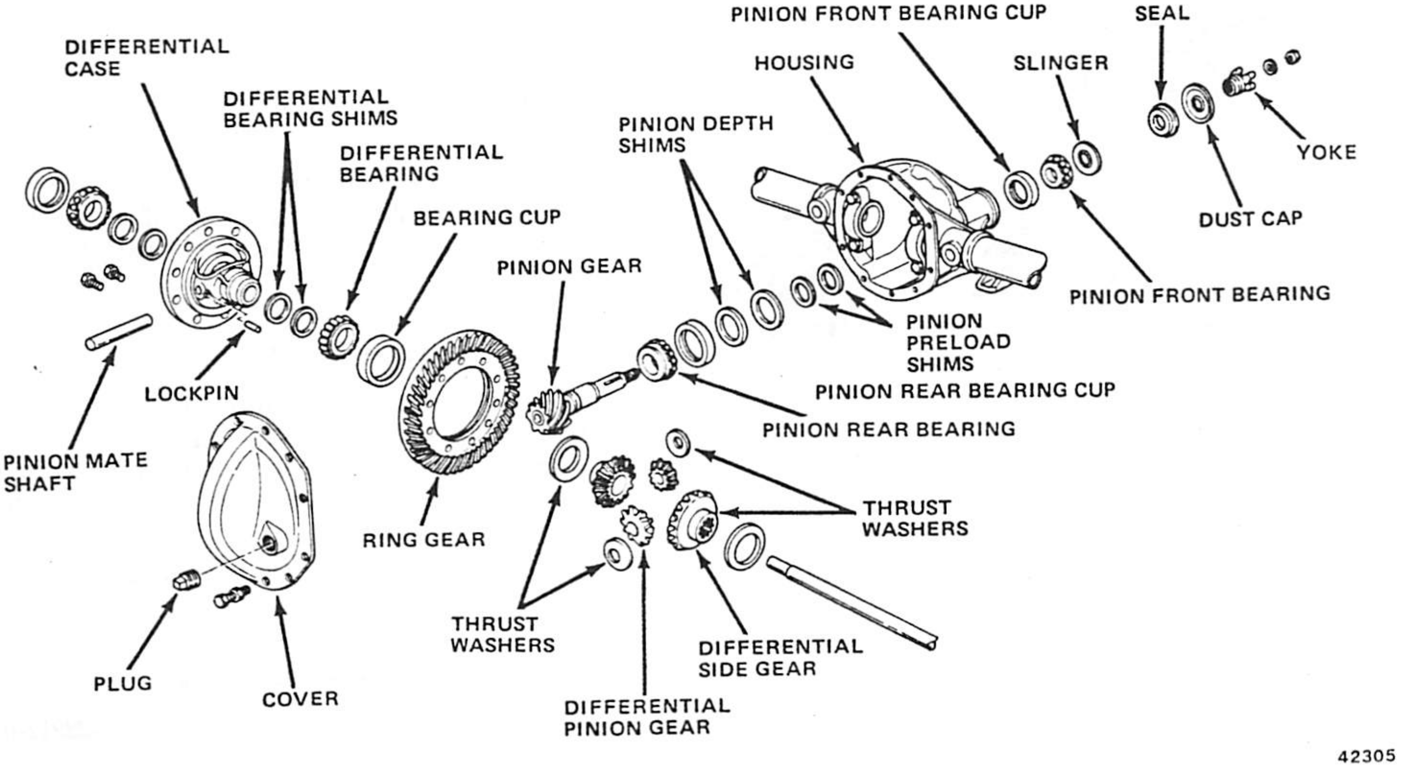

Fig. 2F-46 Model 44 Front Axle

(10) Loosen but do not remove differential bearing cap bolts.

(11) Install Axle Housing Spreader Tool 24385-01. Be sure to install holddown clamps to keep spreader tool in position (fig. 2F-47).

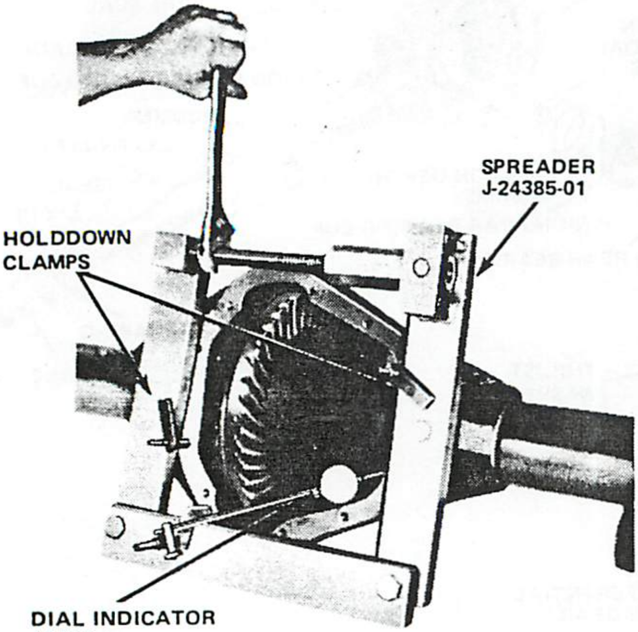

Fig. 2F-47 Spreading Axle Housing

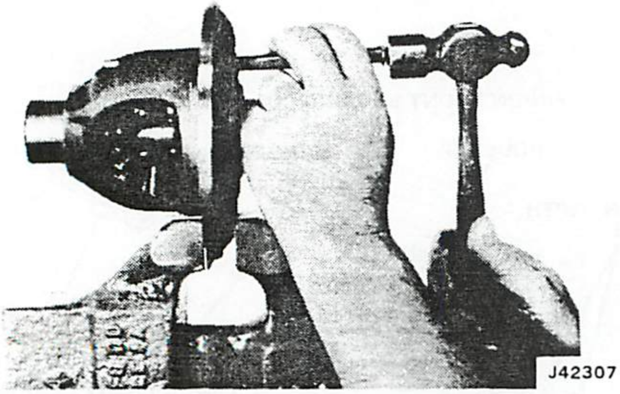

Fig. 2F-48 Pinion Mate Shaft Lockpin Removal

(12) Mount dial indicator on axle housing (fig. 2F-47). Zero indicator and be sure indicator stylus contacts one side of opening in housing.

(13) Spread housing no more than 0.020 inch (0.50 mm) using Tool J-25102. Measure amount housing is spread using dial indicator mounted previously.

CAUTION: *Do not exceed the specified 0.020 inch (0.50 mm) when spreading the housing. If the housing is over-spread, it could be distorted or damaged necessitating replacement.*

(14) When housing has been spread 0.020 inch (0.50 mm), remove dial indicator.

(15) Remove differential bearing caps. Tag caps for assembly reference.

(16) Remove differential assembly using pry bars. Position pry bars under ring gear bolt head and under differential case.

CAUTION: *Remove the spreader tool immediately after removing the differential to avoid the possibility of distorting the housing or causing it to take a set.*

(17) Remove and discard ring gear attaching bolts.

(18) Remove ring gear from differential case using brass drift and hammer. Do not attempt to wedge gear off case as case will be damaged in process.

(19) Remove pinion mate shaft lockpin using small punch (fig. 2F-48).

(20) Remove pinion mate shaft and thrust block.

(21) Rotate pinion gears until gears are aligned with case opening and remove pinion gears and thrust washers.

(22) Remove side gears and thrust washers.

Pinion Gear Removal—Model 30-44-60 Axle

(1) Mark propeller shaft for assembly reference and remove shaft.

(2) Remove and discard pinion nut. Use Tool J-8614-01 to hold yoke while removing nut.

(3) Remove pinion yoke using Tools J-8614-01, -02, and -03 (fig. 2F-4).

(4) Remove dust cap from pinion gear.

(5) Remove pinion gear. Strike end of gear using rawhide hammer to force pinion out of pinion rear bearing and housing.

NOTE: *The pinion bearing preload adjusting shims may remain on the pinion shaft, or stick to the bearing remaining in the housing, or it may fall out. Collect, tag, and retain these shims for assembly (fig. 2F-46).*

(6) Remove pinion front bearing, slinger, and seal (fig. 2F-46). Use 2 x 2 (5 x 5 cm) piece of wood or length of pipe to drive bearing, slinger, and seal out of housing. Discard seal after removal.

Pinion Rear Bearing Removal—Model 30-44 Axle

(1) Assemble and install Bearing Remover Set J-29721 on bearing and gear (fig. 2F-49).

(2) Insert bearing remover adaptors into remover base from top and position adapters 180° apart (fig. 2F-49).

(3) Tighten remover tool forcing screw and remove bearing.

Pinion Rear Bearing Removal—Model 60 Axle

(1) Install Bearing Remover Tool J-22912-01 on bearing and gear (fig. 2F-50).

(2) Position chamfered edges of remover tool between bearing inner race and pinion head.

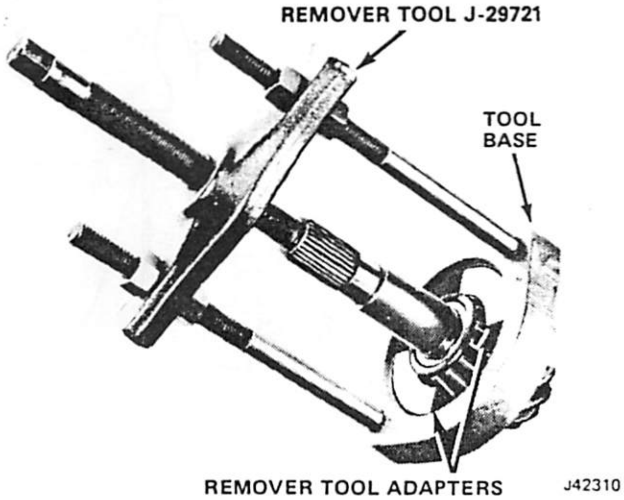

Fig. 2F-49 Pinion Rear Bearing Removal—Model 30-44 Axle

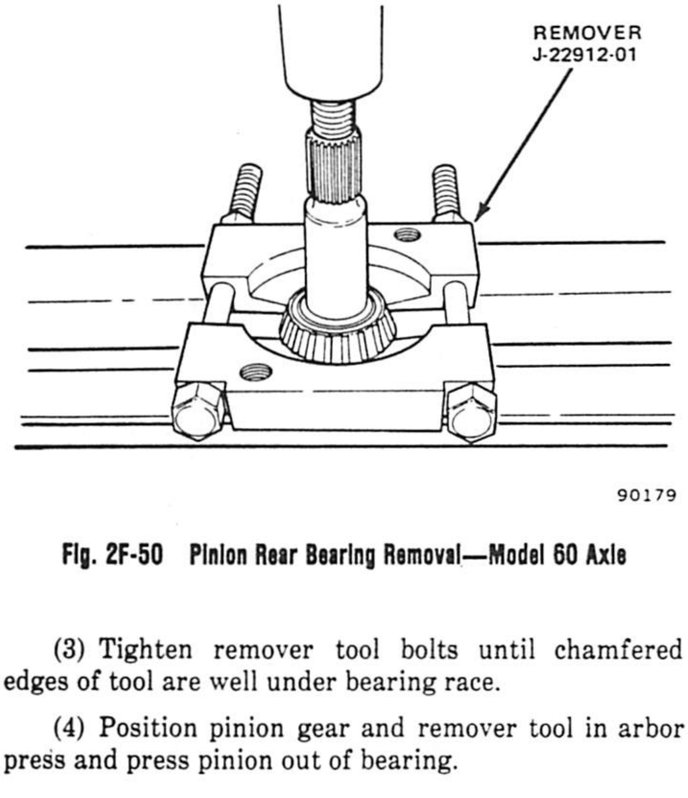

Fig. 2F-50 Pinion Rear Bearing Removal—Model 60 Axle

(3) Tighten remover tool bolts until chamfered edges of tool are well under bearing race.

(4) Position pinion gear and remover tool in arbor press and press pinion out of bearing.

Differential Bearing Removal

(1) Install Bearing Remover Tool J-29721 and adapters on case and bearing (fig. 2F-51).

NOTE: *Use Remover Tool Adapters J-29721-9 for Model 30, J-29721-8 for Model 44, and J-29721-5 for Model 60.*

(2) Position chamfered edge of remover tool adapters between bearing race and case.

(3) Tighten remover tool bolt until chamfered edge of adapters are well under bearing race.

(4) Tighten remover tool forcing screw and remove bearing.

(5) Repeat operations to remove opposite bearing.

NOTE: *When using this tool, be sure the differential case is secure. When the bearing is removed the differential case can drop if not supported.*

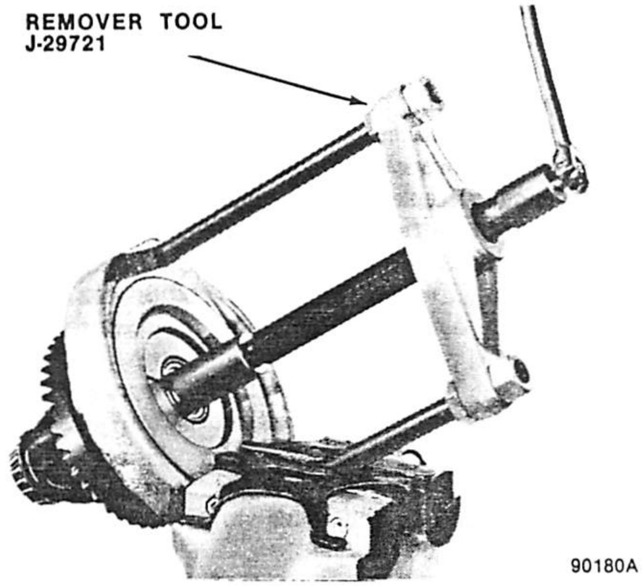

Fig. 2F-51 Differential Bearing Removal—Model 60 Axle

Pinion Bearing Cup Removal—Model 30-44-60 Axle

(1) Remove pinion rear bearing cup. Use brass drift and hammer to tap cup out of housing.

(2) Remove pinion depth shims from rear bearing cup bore in housing. Retain shims for assembly reference even if bent or distorted.

(3) Remove pinion front bearing cup. Use brass drift and hammer to tap cup out of housing.

Cleaning and Inspection

Clean all parts in solvent. Allow bearings to air dry. Dry other parts with compressed air.

Inspect all bearings and cups for pitting, galling, flat spots, or cracks. Replace any bearing or cup that exhibits any of these conditions.

Inspect the differential case for an elongated, or enlarged pinion mate shaft bore. The machined thrust washer surface areas and counterbores must be smooth and free of nicks, gouges, cracks, or burrs. Inspect the case for cracks or other visible damage. Replace the case if it exhibits any of these conditions.

Inspect the pinion mate shaft for excessive wear, scoring, or galling. The shaft must be smooth and concentric. Replace the shaft if worn or damaged.

Inspect the side gears and pinion gears. All gear teeth must display a uniform contact pattern. Inspect the gears and gear teeth for cracks, scoring, excessive wear, or galling. Replace all the gears if any gear exhibits these conditions. Inspect the side gear and pinion gear thrust washers for wear, scoring, galling, or distortion. Replace the washers if they exhibit any of these conditions.

Inspect the pinion mate shaft lockpin for damage or for being loose in the case. Replace the pin or differential case as necessary.

Inspect the ring and pinion gears for worn or chipped teeth, cracks, damaged bearing journals, or damaged attaching bolt threads. If replacement is necessary, the gears must be replaced as matched set only.

Inspect the differential case for cracks, worn shaft and pin bores, or other damage which might necessitate replacement. If raised metal was produced on the bearing cup bore shoulders during bearing cup removal, flatten the raised portion using a blunt punch.

Inspect the pinion yoke for cracks, worn splines, and pitted, rough or corroded seal contact surfaces. Repair or replace the yoke as necessary.

Inspect the pinion differential bearing shim packs for broken, damaged, or distorted shims. Replace shims as necessary during assembly.

Differential Assembly

Pinion Gear Installation and Depth Adjustment

Pinion gear depth is the distance, measured in inches, from the end face of the pinion gear to the axle shaft centerline (fig. 2F-35). This dimension is controlled by shims installed between the pinion rear bearing and axle housing (fig. 2F-52).

Ring and pinion gear sets are factory tested to detect machining variances. Tests are started at a standard setting which is then varied to obtain the most desirable tooth contact pattern and quietest operation. When this setting is determined, identifying numbers are etched on the the ring and pinion (fig. 2F-36).

The ring gear receives one number. The pinion gear receives two numbers which are separated by a + or - sign. The ring gear number and first number on the pinion gear identify the gears as a matched set. Do not attempt to use a set with differing numbers. This is not a matched set.

The second number on the pinion indicates pinion position in relation to the centerline of the axle shafts where tooth contact was best and operation quietest. This number represents pinion depth variance and is the amount, in thousandths of an inch, that the set varied from the standard setting.

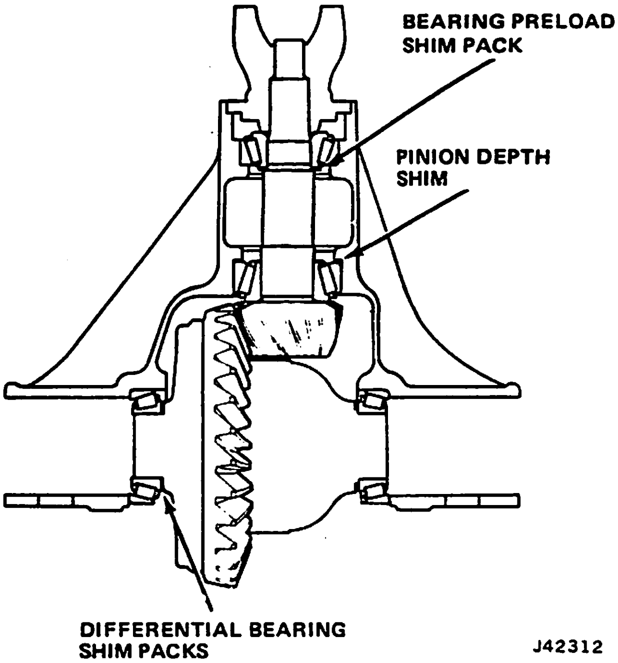

Fig. 2F-52 Differential Shim Locations

The standard for axle Models 30, 44, and 60 are as follows:

- Model 30—2.250 (5.71 cm)
- Model 44—2.625 (6.66 cm)
- Model 60—3.125 (7.93 cm)

If the pinion is marked +2, the gear set varied from standard by +0.002 inch (0.05 mm) and will require 0.002 inch (0.05 mm) less shims than a set marked zero (0). When a set is marked +, the distance from the pinion button face to the axle shaft centerline must be more than the standard setting. If the pinion is marked -3, the set varied from standard by -0.003 inch (0.07 mm) and will require 0.003 (0.07 mm) more shims than a set marked zero. When a set is marked zero, the distance from the pinion button face to the axle shaft centerline must be less than the standard setting. Refer to figure 2F-35 for an illustration of the standard setting dimension.

Pinion Variance Chart

This chart will help determine the approximate starter shim thickness needed for initial pinion depth measurement. However, the chart will not provide the exact shim thickness required for final adjustment and must not be used as a substitute for an actual pinion depth measurement.

To use the chart, proceed as follows:

(a) Measure thickness of original pinion depth shim.

(b) Note pinion depth variance numbers marked on old and new pinion gears.

(c) Refer to Old and New Pinion Marking columns in chart. Chart box where old and new pinion depth columns intersect is approximate amount of change required to obtain desired starter shim thickness.

For example, if the old pinion is marked -3 and the new pinion +2, chart procedure would be as follows: Refer to Old Pinion Marking column at left side of chart and locate -3 figure in this column. Then read to right, across chart, until under +2 figure in New Pinon Marking column. Box where the two columns intersect will provide amount of shim thickness required. In this case, the number in the intersecting box is -0.005 (0.12mm) which represents the amount to be subracted from the original shim thickness. If the box number had been a + figure, this amount would be added to the original shim thickness.

CAUTION: *Front axle differentials use an oil slinger between the pinion rear bearing and the pinion head (fig. 2F-1). This slinger must be installed in order to measure and adjust pinion depth correctly.*

(1) Measure thickness of pinion depth shim removed during disassembly.

(2) Note pinion depth variance numbers on old and new pinion gears.

(3) Refer to pinion variance chart and determine amount to be added to or subtracted from original shim to arrive at starter shim thickness.

CAUTION: *Do not use or assume that the starter shim thickness will be the final shim setting. An actual pinion depth measurement must be performed and the final shim thickness adjusted as necessary.*

(4) Install pinion front bearing cup in housing bore using Driver Handle J-7079-02 and Installer J-25101.

(5) Install starter shim in rear bearing bore of housing. Be sure shim is centered in cup bore. If shim is chamfered, chamfer must face toward housing bore—not toward pinion head.

(6) Install pinion rear bearing cup in housing bore. On Model 30 axles, install cup using Driver Handle J-7079-02 and Installer J-25101. On Model 44 and 60 axles, install cup using Driver Handle J-25122 and Installer J-25157.

(7) On front axle differentials, install oil slinger on pinion gear. Be sure slinger is seated on pinion head before installing rear bearing.

(8) Install rear bearing on pinion. On Model 30 axles install cup using Installer Sleeve J-5590 (fig. 2F-53). On Model 44 and 60 axles, install bearing using Installer Sleeve J-24433 (fig. 2F-53).

(9) Install pinion gear in axle housing.

(10) Install pinion front bearing, pinion yoke, washer, and original pinion nut on pinion. Tighten nut only enough to remove end play and provide 10 to 15 inch-pounds (1 to 2 N•m) of drag torque when pinion is rotated.

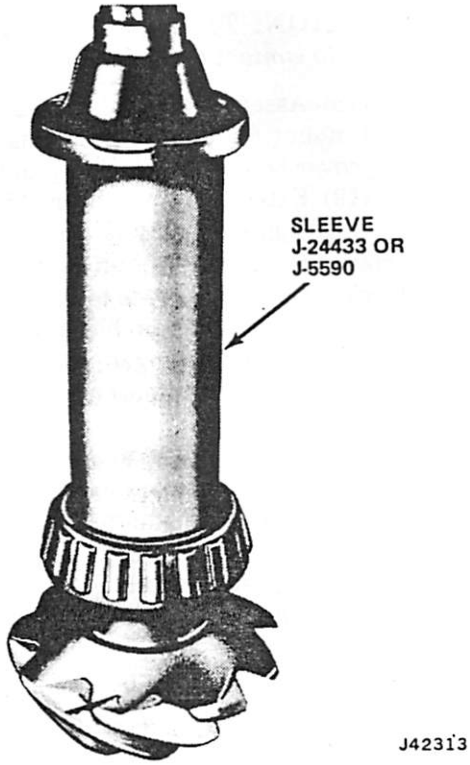

Fig. 2F-53 Pinion Bearing Installation

NOTE: *Do not install the pinion seal, slinger, or dust cap at this time. The pinion will be removed after measuring and adjusting pinion depth.*

(11) Note pinion depth variance marked on pinion gear. If number is preceded by a plus (+) sign, add that amount (in thousands or millimeters) to standard setting for axle model being overhauled. If number is preceded by a minus (-) sign, subtract that amount (in thousands or millimeters) from standard setting. Result of addition or subtraction is desired pinion depth. Record this figure for further reference.

NOTE: *If the gear is marked 0 (zero), use the standard setting.*

(12) Assemble Gauge Arbor J-5223-4 and Discs. On Model 30 axles, use Discs J-5223-26. On Model 44 and 60 axles, use Discs J-5223-25.

(13) Install assembled arbor and discs in differential bearing cup bores (fig. 2F-54). Be sure discs are firmly seated in bearing cup bores.

(14) Install differential bearing caps over discs and tighten cap bolts securely, but not to specified torque.

(15) Remove standard plunger from Gauge Block J-5223-20 and install Plunger J-5223-27.

(16) Compress plunger completely and tighten gauge block thumbscrew securely.

(17) Install Gauge Block J-5223-20. Position block so plunger is directly under Arbor J-5223-4 and flat surface on anvil side of block is seated on end face of pinion (fig. 2F-54).

CAUTION: *To avoid false readings, do not allow the anvil to contact the pinion gear at any point.*

(18) Assemble Bolt J-5223-29 and Clamp J-5223-24 and mount tools on axle housing (fig. 2F-54). Use housing cover bolt to attach clamp to housing.

(19) Extend clamp bolt until it presses against gauge block. Align gauge block plunger with center of gauge arbor and tighten clamp bolt until it presses against block with enough force to prevent block from moving.

(20) Loosen gauge block thumbscrew and release plunger. When plunger contacts arbor tool, tighten thumbscrew to lock plunger in position. Do not disturb plunger position.

(21) Remove clamp and bolt from axle housing.

(22) Remove gauge block and measure distance from end of anvil to end of plunger using 3-inch (7.62 cm) micrometer (fig. 2F-55). This dimension represents **measured pinion depth.** Record this dimemsion for assembly reference.

NOTE: *If the measured pinion depth equals the desired pinion depth, the installed shim thickness is correct and further adjustment is not required.*

(23) Remove bearing caps and remove arbor tool and discs.

(24) Remove pinion gear, rear bearing cup, and depth shim from axle housing.

(25) Measure thickness of depth shim just removed from housing and add this dimension to measured pinion depth obtained in previous step. From this total, subtract desired pinion depth. Result represents shim thickness required to adjust pinion depth.

NOTE: *The desired pinion depth is the standard setting plus or minus the pinion depth variance.*

(26) Following examples illustrate procedure for determining correct shim thickness.

Example I—Pinion Depth Variance is Plus (+) Model 44 Axle

Step 1—Determine desired pinion depth.

Add pinion depth variance (marked on pinion gear) to standard setting. Result is desired pinion depth.

Standard Setting	2.625 (66.6 mm)
Pinion Depth Variance	+0.004 (0.10 mm)
Desired Pinion Depth =	2.629 (66.7 mm)

Step 2—Determine total measured pinion depth.

Add measured pinion depth to measure shim thickness. Result is total measured pinion depth.

Measured Pinion Depth	2.601 (66.0 mm)
Starter Shim Thickness	+0.107 (2.71 mm)
Total Measured Pinion Depth =	2.708 (68.7 mm)

Step 3—Determine correct shim thickness.

Subtract desired pinion depth from total measured pinion depth. Result is correct shim thickness.

Total Measured Pinion Depth	2.708 (68.7 mm)
Desired Pinion Depth	-2.629 (66.7 mm)
Correct Shim Thickness =	0.079 (2.00 mm)

Example II—Pinion Depth Variance is Minus (-) Model 60 Axle

Step 1—Obtain desired pinion depth.

Subtract pinion depth variance (marked on pinion gear) from standard setting. Result is desired pinion depth.

Standard Setting	3.125 (79.3 mm)
Pinion Depth Variance	-0.002 (0.05 mm)
Desired Pinion Depth =	3.123 (79.35 mm)

Step 2—Determine total measured pinion depth.

Add measured pinion depth to measured shim thickness. Result equals total measured pinion depth.

Measured Pinion Depth	3.120 (79.2 mm)
Starter Shim Thickness	+0.100 (2.54 mm)
Total Measured Pinon Depth =	3.220 (81.7 mm)

Step 3—Determine correct shim thickness.

Subtract desired pinion depth from total measured pinion depth. Result is correct shim thickness.

Total Measured Pinion Depth	3.220 (81.7 mm)
Desired Pinion Depth	-3.123 (79.3 mm)
Correct Shim Thickness =	0.097 (2.46 mm)

(27) Remove pinion gear, rear bearing cup, and starter shim.

(28) Install correct thickness pinion depth shim in housing bearing cup bore and reinstall rear bearing cup.

Pinion Bearing Preload Adjustment

(1) Install pinion bearing preload shims.

(2) Install pinion gear, front bearing, oil slinger, if equipped, yoke, washer, and **old** pinion nut. Tighten nut to 260 foot-pounds (352 N•m) torque.

(3) Measure torque required to rotate pinion gear using 0-50 inch-pound torque wrench. Rotating torque should be 20-40 inch-pounds with new bearings, or 10-20 inch-pounds (1-2 N•m) with original bearings. Add shims to decrease preload or subtract shims to increase preload.

(4) Remove pinion nut, washer, and yoke when pinion bearing preload is adjusted.

(5) Install new pinion oil seal using Tool J-25104 on Model 30 and 44 axles, or Tool J-24384 on Model 60 axles.

(6) Install yoke and pinion washer.

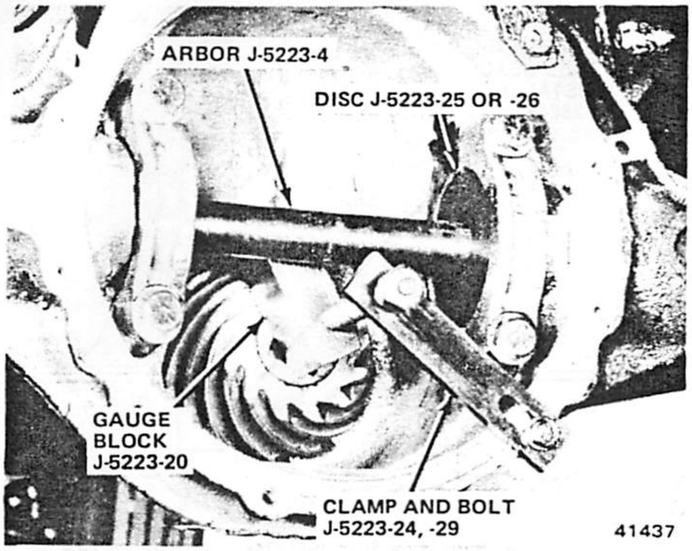

Fig. 2F-54 Installing Pinion Depth Gauge Tools

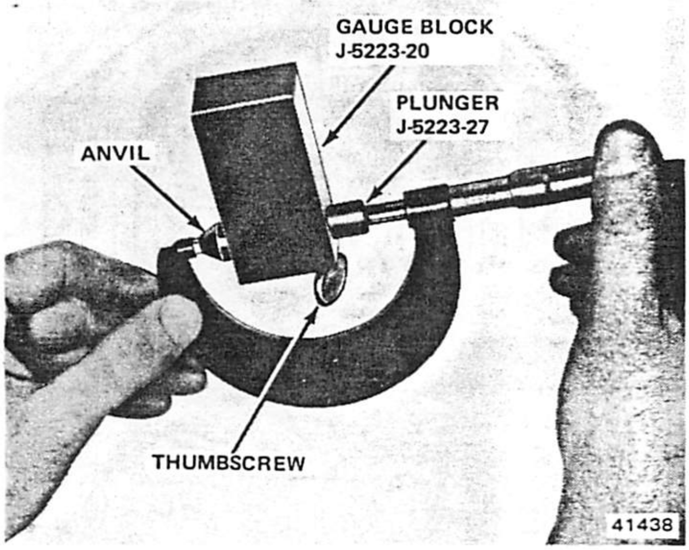

Fig. 2F-55 Measuring Gauge Block

(7) Install new pinion nut. Tighten nut to 210 foot-pounds (285 N•m) torque on Model 30 and 44 axles, and 260 foot-pounds (352 N•m) torque on Model 60 axles.

Differential Side Gear Adjustment

(1) Install thrust washers on side gears and install gears in case.

(2) Install thrust washers on differential pinion gears and install gears in case.

(3) Install thrust block and pinion mate shaft pin in case.

(4) Position differential case on end.

(5) Tap differential case lightly on flat surface to settle gears into position in case.

(6) Measure clearance between case and side gears using feeler gauges (fig. 2F-56). Clearance between gears and case must be 0.000 to 0.006 inch (0.00 to 0.15 mm).

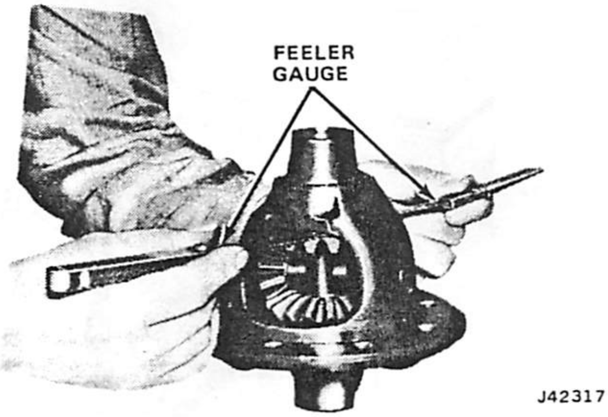

Fig. 2F-56 Checking Side Gear Clearance

(7) If clearance between gears and case exceeds 0.006 inch, replace complete differential case.

NOTE: *Shims are no longer available.*

(8) If differential case is replaced, check side gear clearance again.

(9) Install ring gear on differential case and start two bolts in holes 180 degrees apart. Tighten bolts evenly to seat ring gear.

(10) Install remaining bolts and tighten to 55 foot-pounds (74 N•m) torque.

Differential Bearing Preload and Ring Gear Backlash Adjustment

NOTE: *Differential bearing preload is controlled by shims located between the differential case and bearings.*

(1) Remove old differential bearing shims if not removed previously.

(2) Install differential bearings. On Model 30 and 44 axles, install bearings using Driver Handle J-7079-02 and Installer J-22175 (fig. 2F-57). On Model 60 axles, install bearings using Driver Handle and Installer J-24430.

(3) Install bearing cups on differential bearings.

(4) Install differential in axle housing.

(5) Install bearing caps and tighten cap bolts securely but not to specified torque.

(6) Hold ring gear in contact with pinion gear and pry differential bearing cups toward center of case using screwdriver.

(7) Insert various thickness feeler gauges between each bearing cup and axle housing until ring gear backlash is 0.001 to 0.002 inch (0.02 to 0.05 mm) with feeler gauges installed. Feeler gauges must be installed at both sides of differential and at same time to obtain accurate measurement.

(8) Assemble shim pack that will provide desired backlash. Check backlash again. If OK, tag and retain shims for assembly.

(9) Remove differential case.

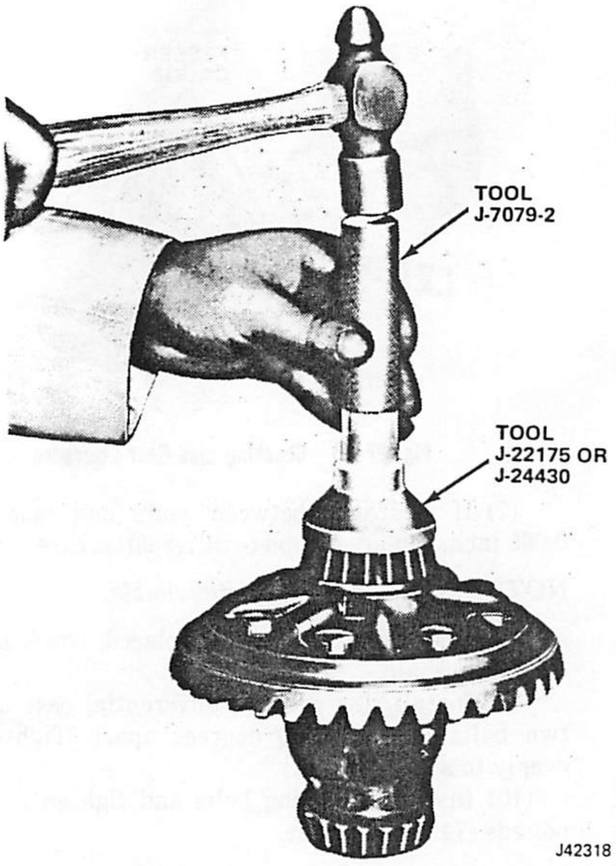

Fig. 2F-57 Differential Bearing Installation

(10) Add additional 0.015 inch (0.38 mm) thickness shim to shim pack to be installed on tooth side of ring gear.

(11) Remove differential bearings. Refer to removal procedures outlined in Differential Assembly.

(12) Install shim packs on appropriate sides of differential case and reinstall differential bearings. On Model 30 and 44 axles, install bearings using Tools J-7079-2 and J-22175. On Model 60 axles, install bearings using Tool J-24430 (fig. 2F-57).

NOTE: *When overhauling a front axle differential, check the axle housing inner oil seals. If seal replacement is required, install replacement seals using Tool J-28648 (fig. 2F-58).*

(13) Mount Spreader Tool J-25102 and Dial Indicator J-8001 on housing. Spread housing no more than 0.020 inch (0.50 mm) (fig 2F-47). Do not exceed 0.020 inch (0.50 mm) to avoid damaging housing.

(14) Remove dial indicator when housing has been spread desired amount.

(15) Lubricate differential bearings with axle lubricant and install differential bearing cups on bearings.

(16) Install differential in housing. Use rawhide mallet to seat differential. Be sure ring and pinion gear teeth mesh completely.

(17) Remove axle housing spreader tool.

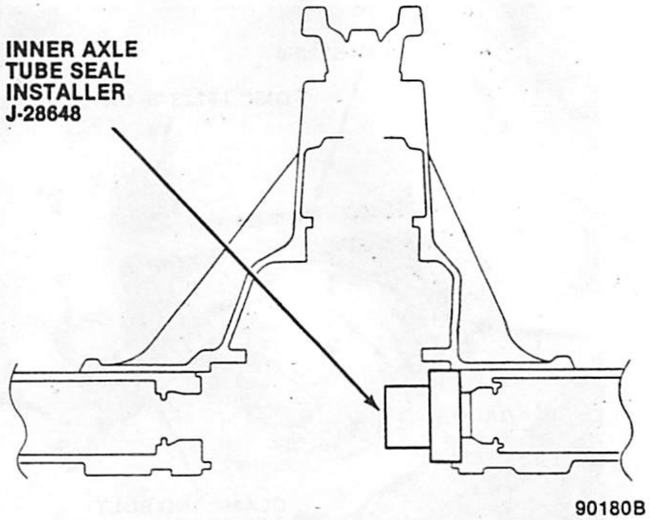

Inner Axle Tube Seal Installer - Models 44 and 60

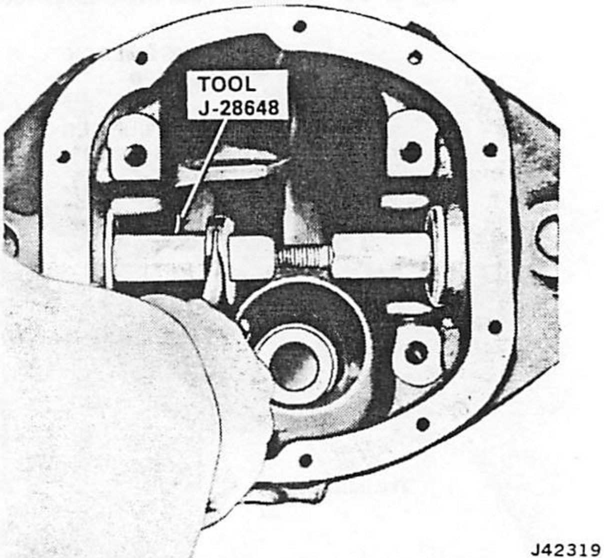

Fig. 2F-58 Front Axle Housing Inner Oil Seal Installation

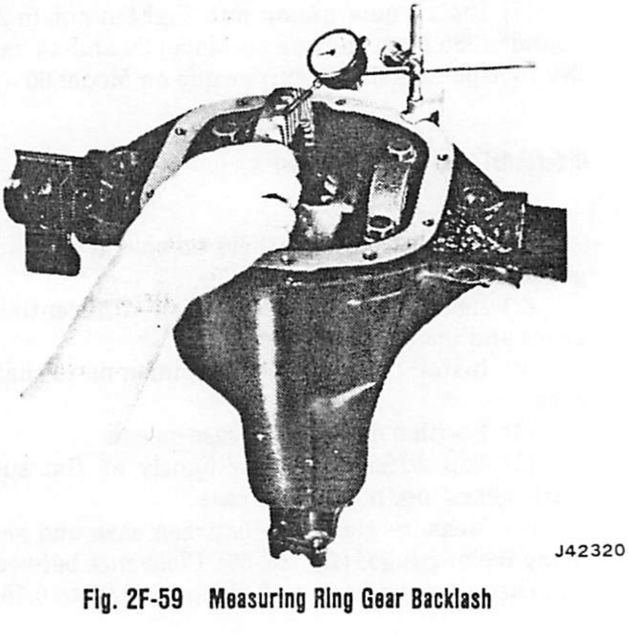

Fig. 2F-59 Measuring Ring Gear Backlash

(18) Apply sealing compound to bearing cap bolt threads and install bolts. Tighten bolts to 40 foot-pounds (54 N•m) torque on Model 30 axle, or to 80 foot-pounds (108 N•m) torque on Model 44 and 60 axles.

(19) Remount Dial Indicator J-8001 on housing and measure ring gear backlash (fig. 2F-59). Measure backlash at two points. Backlash should be 0.005 to 0.010 inch (0.12 to 0.25 mm). If backlash is incorrect, add or subtract shims from differential bearing shim packs until correct backlash is obtained.

NOTE: *Changing the position of a 0.005 inch (0.12 mm) shim from one side to the other will change the amount of backlash approximately 0.003 inch (0.07 mm).*

(20) Measure ring gear runout. If runout exceeds 0.006 inch (0.15 mm), case may be distorted, or there is dirt between case and gear, or ring gear bolts are loose. Check and correct as necessary.

(21) Raise spring and install front spring shackle to spring attaching bolts.

(22) Remove jack stand.

(23) Install tie plate and U-bolts. Tighten U-bolt nuts as follows:

1/2-20—55 foot-pounds (75 N•m)
9/16-18—100 foot-pounds (136 N•m)

(24) Tighten spring shackle to spring attaching bolts on CJ and Scrambler models to 24 foot-pounds (33 N·m) torque. Cherokee, Wagoneer and Truck model bolts should be tightened to 100 foot-pounds (136 N·m) torque.

(25) Install stabilizer bar link to tie plate attaching nut.

(26) Install shock absorber. Tighten shock absorber to tie plate retaining nut to 45 foot-pounds (61 N•m) torque.

(27) Install axle shafts.

(28) Install axle housing cover. On Model 44 and 60 axles, clean cover and housing mating surfaces and apply thin bead of Jeep Gasket-In-A-Tube, or equivalent, silicone sealer to housing and cover before installation.

SPECIFICATIONS

Differential Specifications

Model 30 Front Axle	USA	Metric
Differential Bearing Preload	.015 in	0.38 mm
Differential Side Gear-to-Case Clearance	.000-.006 in	0.000-0.15 mm
Ring Gear	.005-.009 in	0.12-0.22 mm
Pinion Bearing Break-Away Preload		
Original Bearings	15-25 in-lbs.	2-3 N·m
New Bearings	20-40 in-lbs.	2-5 N·m
Model 44 Axle		
Differential Bearing Preload	0.15 in	0.38 mm
Differential Side Gear-to-Case Clearance	.000-.006 in	0.000-0.15 mm
Ring Gear Backlash	.005-.010 in	0.12-0.25 mm
Pinion Bearing Break-Away Preload		
Original Bearings	10-20 in-lbs.	1-2 N·m
New Bearings	20-40 in-lbs.	2-5 N·m
Model 60 Axle		
Differential Bearing Preload	.015 in	0.38 mm
Differential Side Gear-to-Case Clearance	.000-.006 in	0.000-0.15 mm
Drive Gear-to-Pinion Backlash	.005-.009 in	0.12-0.15 mm
Drive Pinion Bearing Break-Away		
Original Bearings	10-20 in-lbs.	1-2 N·m
New Bearings	20-40 in-lbs.	2-5 N·m
AMC/Jeep Axle		
Axle Shaft End Play (Shims — Left Side Only) - CJ - Scrambler	.004-.008 in (.006 in desired)	0.10-0.20 mm (0.15 mm desired)
Pinion Bearing Preload (Collapsible Sleeve)	17-25 in-lbs.	2-3 N·m
Differential Bearing Preload (Shims)	.008 in	0.20 mm
Differential Case Flange Runout (Inspection only — no adjustment)	.002 in max.	0.05 mm max.
Ring Gear Backlash (Shims)	.005-.009 in (.008 in desired)	0.12-0.15 mm (0.20 mm desired)
Pinion Gear Standard Setting (Shims)	2.547 in	64-69 mm

60657B

Differential Torque Specifications

Service Set-To Torques should be used when assembling components. Service In-Use Recheck Torques should be used for checking a pre-tightened item.

	USA (ft-lbs)		Metric (N·m)	
	Service Set-To Torque	Service In-Use Recheck Torque	Service Set-To Torque	Service In-Use Recheck Torque
Model 30 Front Axle				
Axle Housing Cover Bolts	20	15-25	27	20-34
Differential Bearing Cap Bolts	40	35-50	54	47-68
Ring Gear-to-Case Bolts	55	45-65	75	61-88
Lower Ball Stud Nut	80 min.	–	108 min.	–
Pinion Nut	210	200-220	271	285-298
Universal Joint U-Bolts	15	13-18	20	18-24
Upper Ball Stud Nut	100 min.	–	136 min.	–
Upper Ball Stud Seat	50 min.	–	68 min.	–
Wheel-to-Hub Nuts	80	65-90	108	88-122
Model 60 Axle				
Axle Housing Cover Bolts	20	15-25	27	20-34
Support Plate Bolts/Nuts	50	45-55	68	61-75
Differential Bearing Cap Bolts	80	70-90	108	95-122
Ring Gear-to-Case Bolts	105	100-110	142	135-149
Pinion Nut	260	250-270	352	339-366
Universal Joint Strap Bolts	15	13-18	20	18-24
Wheel-to-Hub Nuts	120	110-125	163	149-169
AMC/Jeep Axle				
Axle Housing Cover Bolts	170 in-lbs	150-190 in-lbs	19	17-21
Brake Tube-to-Rear Wheel Cylinder	97 in-lbs	90-105 in-lbs	11	10-12
Differential Bearing Cap Bolts	87	80-95	10	9-11
Ring Gear-to-Case Bolt	105	95-115	142	135-149
Rear Brake Support Plate Bolts	32	25-40	43	34-54
Axle Shaft-to-Hub Nuts-CJ	250 min.	250 min.	339 min.	–
Clamp Strap Bolts	16	15-19	18	14-24

All Torque values given in foot-pounds and newton-meters with dry fits unless otherwise specified.

60657A

TRAC-LOK DIFFERENTIAL

GENERAL

The Trac-Lok limited slip differential is available as an option on Jeep vehicles equipped with the Model 208 or 300 transfer case only. Trac-Lok is used in rear axles only and is not available on vehicles equipped with Quadra-Trac. Two Trac-Lok units are used. Model 60 axles use a slightly different unit than is used in AMC/Jeep rear axles. Refer to the Overhaul section for servicing procedures.

OPERATION

In a conventional differential, torque applied to the ring gear is transmitted to the axle shafts through the differential gears. During normal operation, torque transmitted to each axle shaft is equal at all times. However, if one wheel slips, the opposite wheel will generate only as much torque as the slipping wheel.

With Trac-Lok, part of the ring gear torque is transmitted through clutch packs located between the differential side gears and case. The clutch packs contain multiple disc clutches which have radial grooves on the plates and concentric grooves on the discs.

In operation, the Trac-Lok clutches are engaged by two concurrent forces. The first being preload force exerted through Belleville springs contained within the clutch packs and the second is from separating forces generated by the side gears as torque is applied through the ring gear.

The Trac-Lok design provides the normal differential action needed for turning corners and for the transmittal of equal torque to both wheels when driving straight ahead. However, when one wheel loses traction and spins, the clutch packs transfer additional torque to the wheel having the most traction. Trac-Lok differentials resist wheel spin on bumpy roads and provide more pulling power when one wheel loses traction. Pulling power is provided continuously until both wheels lose traction. If both wheels slip due to unequal traction, Trac-Lok operation is normal. In extreme cases of differences in traction, the wheel with the least traction may spin after the Trac-Lok has transferred as much torque as possible to the nonslipping wheel.

LUBRICATION

Use Jeep axle lubricant, or equivalent marked SAE 85W-90, grade GL-5 in Trac-Lok axles. In addition, the only acceptable method for cleaning the Trac-Lok differential is by disassembling the unit and wiping it clean using shop towels.

NOTE: *The Trac-Lok differential is serviced at the same time intervals as the standard differential.*

Trac-Lok Lubricant Change

(1) Warm axle lubricant. Operate vehicle in gear, on hoist, with wheels off floor for minimum of 5 minutes at 30 mph.

WARNING: *Never attempt to operate a Trac-Lok equipped vehicle in gear with only one wheel raised. The vehicle could propel itself off the jack and cause damage or personal injury.*

(2) Stop engine and raise vehicle on hoist.

(3) Remove axle housing cover drain plug or cover and drain lubricant while it is warm. If cover is removed, discard cover gasket.

(4) Remove any residual lubricant from axle housing using shop cloths.

(5) Install drain plug. If axle housing cover was removed, clean cover and housing mating surfaces and apply Jeep Gasket-In-A-Tube, or equivalent sealer to cover and housing mating surfaces. Install cover and cover bolts. Tighten cover bolts to 20 foot-pounds (27 N•m) torque.

(6) Refill axle housing with specified lubricant only. Refer to Specifications for lubricant capacities of various axle models.

(7) Operate vehicle on road for approximately ten miles (16 km). Make at least ten figure eight turns to flush old lubricant out of clutch packs.

(8) Return vehicle to shop and raise vehicle on hoist.

(9) Drain and replace axle lubricant again. If axle housing cover is removed, be sure to clean cover and housing mating surfaces and reapply Jeep Gasket-In-A-Tube, or equivalent sealer to mating surfaces before reinstalling cover.

(10) Lower vehicle.

(11) Road test vehicle and verify proper Trac-Lok operation.

NOTE: *If a slight chatter occurs after flushing and refilling the Trac-Lok differential, drive the vehicle an additional ten to twenty miles (16 to 32 km) or until chatter stops. If the chatter persists after twenty (32 km) or more miles of driving, an overhaul may be necessary.*

DIAGNOSIS

If noisy or rough operation such as chatter occurs when turning corners, the most probable cause is incorrect or contaminated lubricant. Before removing the Trac-Lok unit for repair, drain, flush, and refill the axle with the specified lubricant. Refer to the lubricant change procedure under Lubrication. A complete lubricant drain and refill with the specified lubricant will usually correct chatter.

Trac-Lok Operational Test

Trac-Lok operation can be checked quickly using the following test.

(1) Position one wheel on solid, dry pavement and opposite wheel on ice, mud, grease, or similiar low traction surface.

(2) Increase engine rpm gradually to obtain maximum traction prior to breakaway. Ability to move vehicle effectively will demonstrate proper performance.

NOTE: *If the test is performed on extremely slick surfaces such as ice or grease coated surfaces, some question may exist as to proper performance. In these extreme cases, a properly performing Trac-Lok will provide greater pulling power by lightly applying the parking brake.*

OVERHAUL

Disassembly

(1) Remove differential from axle housing. Removal procedures are same as outlined for standard differential. Refer to figures 2F-60 and 2F-61 for parts nomenclature.

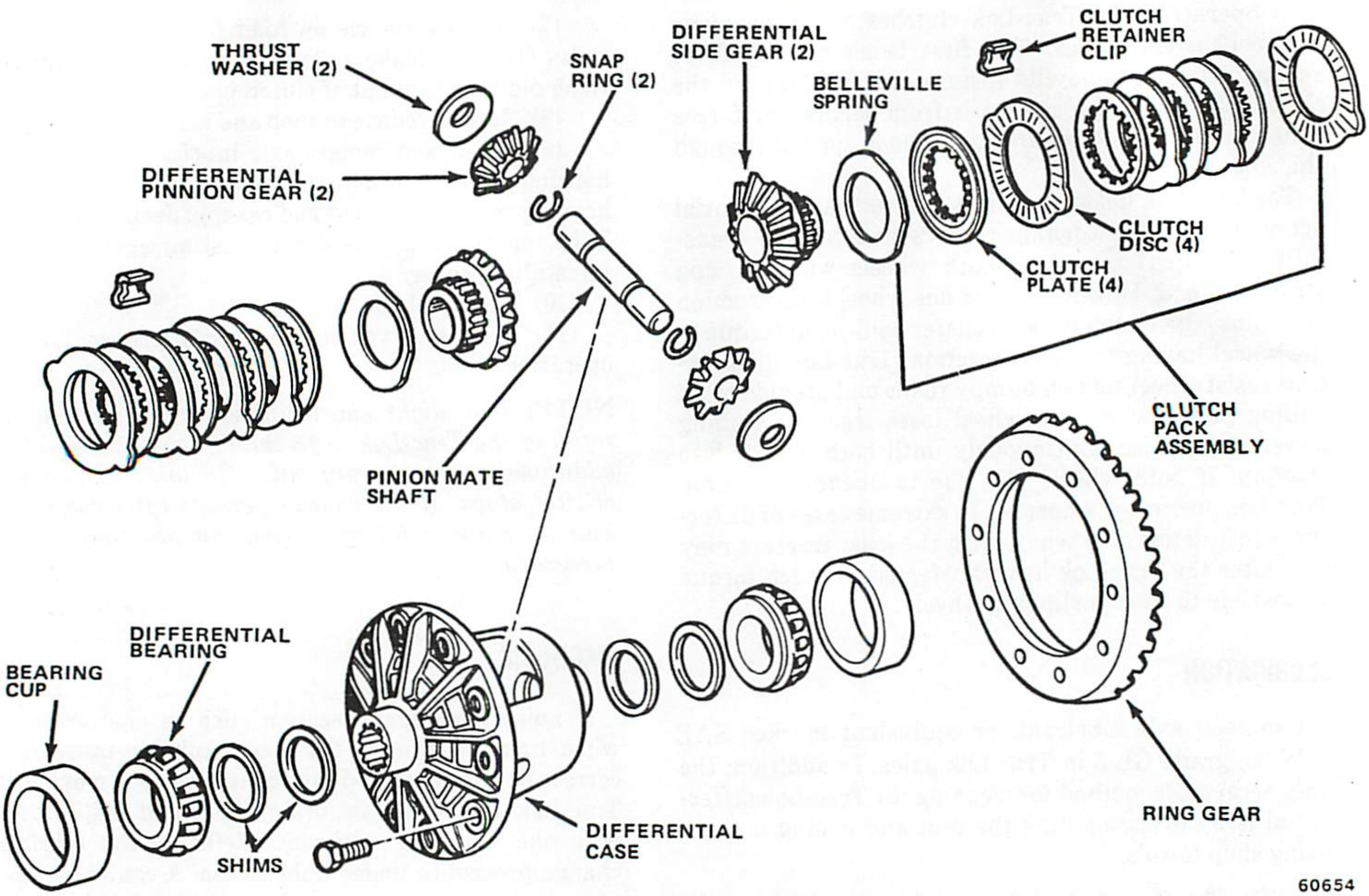

Fig. 2F-60 Trac-Lok Differential—Model 60 Axle

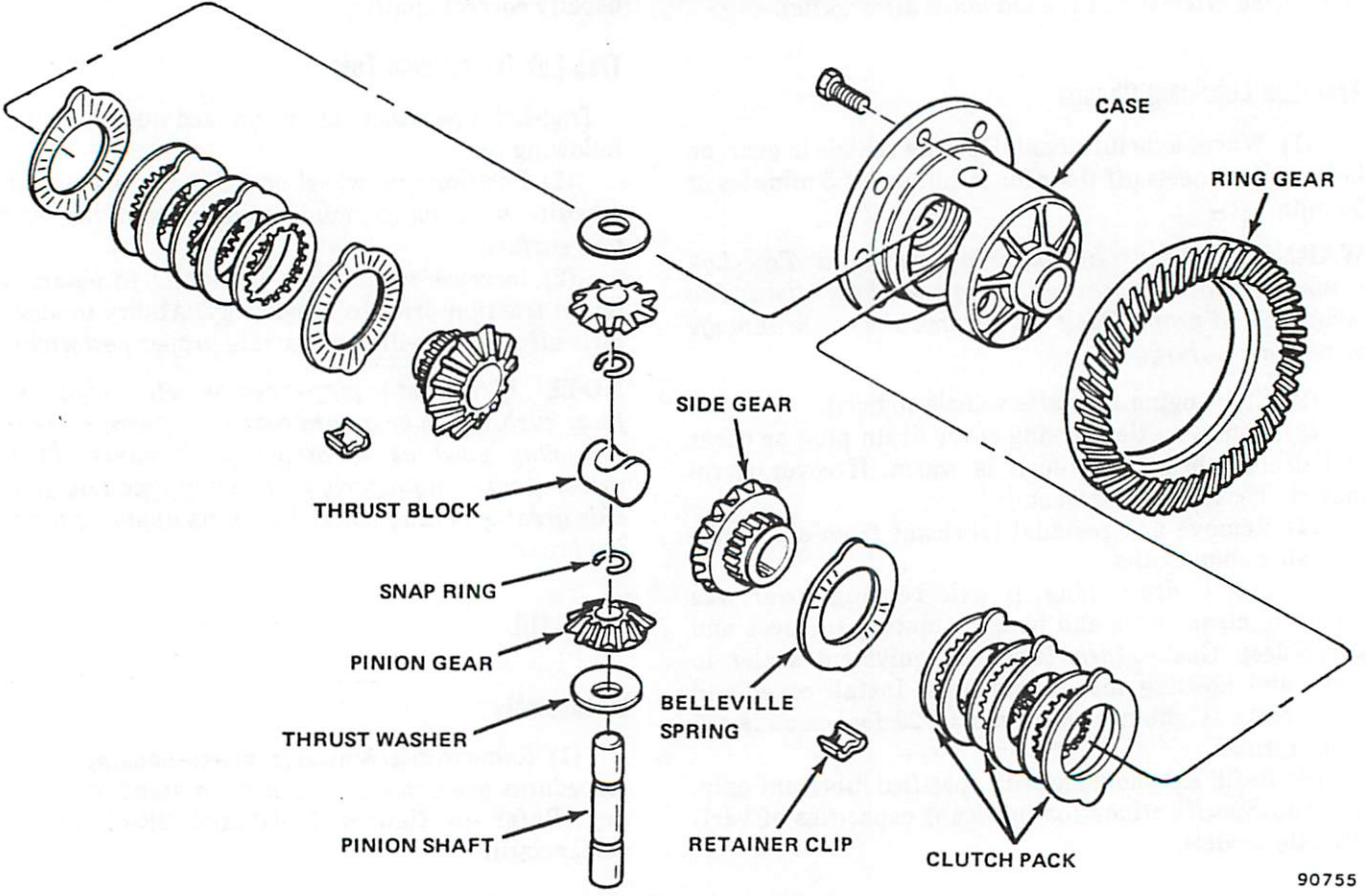

Fig. 2F-61 Trac-Lok Differential—AMC/Jeep Axle

(2) Install one axle shaft in vise with spline end facing upward and tighten vise. Do not allow more than 2-3/4 inch (7 cm) of shaft to extend above top of vise (fig. 2F-62). This prevents shaft from fully entering side gear, causing interference with step plate tool used to remove differential gears.

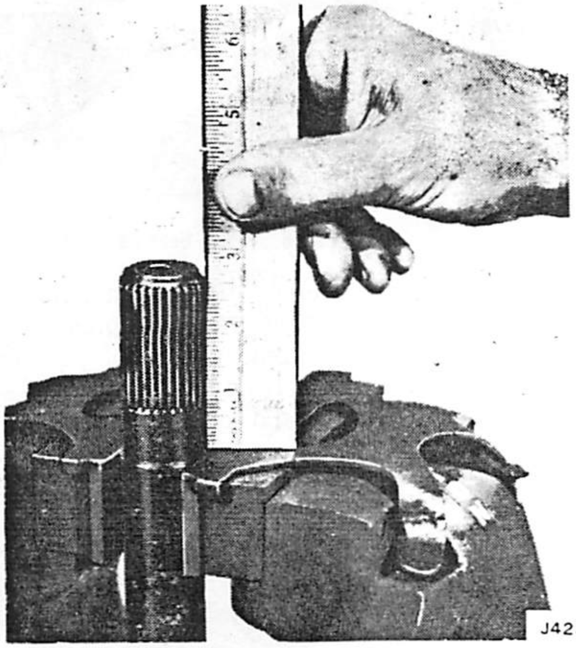

Fig. 2F-62 Axle Shaft Positioned in Vise

(3) Mount differential case on axle shaft with ring gear bolt heads facing upward (fig. 2F-63).

Fig. 2F-63 Differential Mounted on Axle Shaft

(4) Remove and discard ring gear bolts.

(5) Place shop towels under ring gear to protect gear when it is removed from case (fig. 2F-63).

(6) Remove ring gear from case using rawhide hammer.

(7) Remove differential case from axle shaft and remove ring gear.

(8) Remount differential case on axle shaft.

(9) Remove snap rings from pinion mate shaft (fig. 2F-64). Use two screwdrivers to disengage snap rings. Place shop towel on opposite opening of case to prevent snap rings from flying out of case.

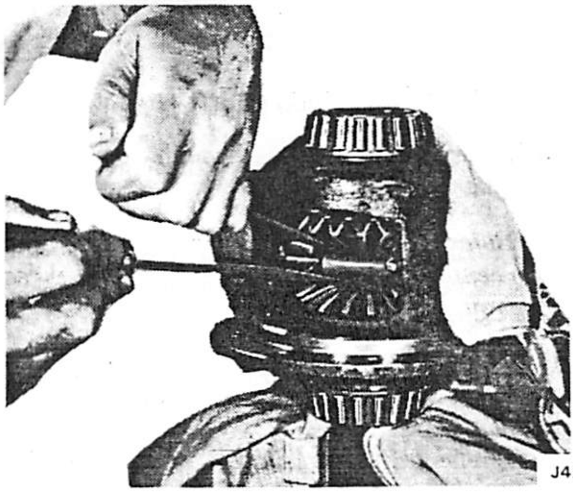

Fig. 2F-64 Pinion Mate Shaft Snap Ring Removal

NOTE: *On the Model 60 Trac-Lok, the pinion mate shaft is retained in the case by a roll pin. Use a 3/16 inch (5 mm) diameter pin punch to remove this pin.*

(10) Remove pinion mate shaft using hammer and brass drift.

NOTE: *Gear Rotating Tool J-23781 is required to perform the following steps. The tool consists of three parts: gear rotating tool, forcing screw, and step plate.*

(11) Install step plate in lower differential side gear (fig. 2F-65).

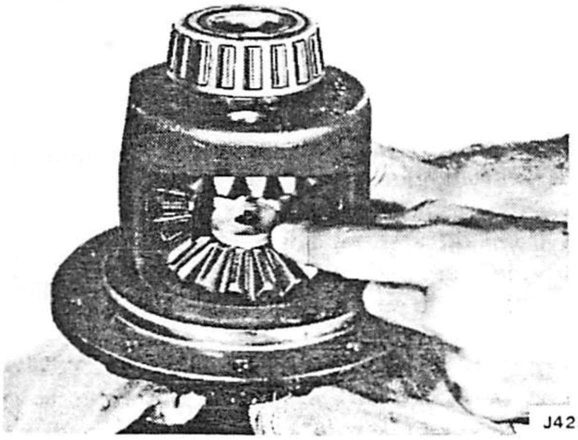

Fig. 2F-65 Step Plate Installation

(12) Position pawl end of gear rotating tool on step plate (fig. 2F-66).

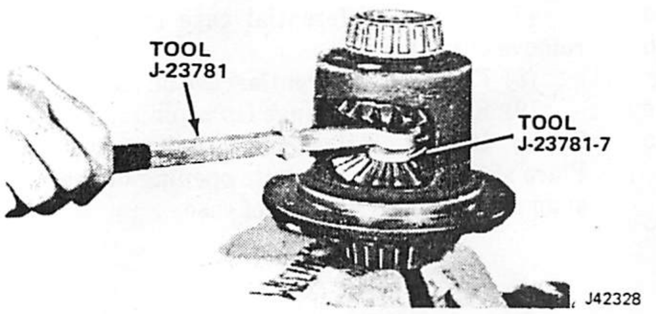

Fig. 2F-66 Gear Rotating Tool Installation

(13) Insert forcing screw through top of case and thread into gear rotating tool.

NOTE: *Before using forcing screw, apply daub of grease to centering hole in step plate and oil threads of forcing screw.*

(14) Center forcing screw in step plate and tighten screw to move differential side gears away from differential pinion gears.

(15) Remove differential pinion gear thrust washers using feeler gauge or shim stock of 0.030 inch thickness (0.76 mm). Insert shim stock or gauge between washer and case and withdraw shim stock and thrust washer (fig. 2F-67).

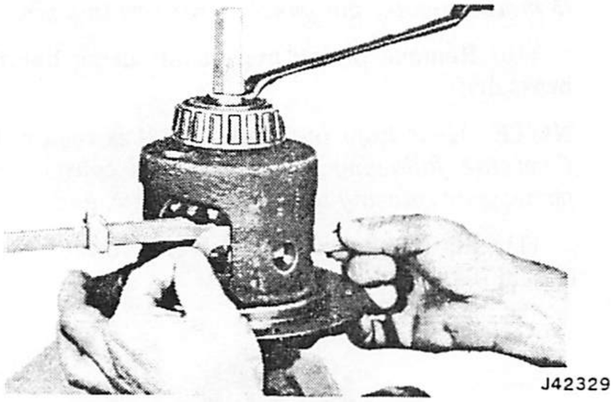

Fig. 2F-67 Pinion Thrust Washer Removal

(16) Tighten forcing screw until a slight movement of differential pinion gears is observed.

(17) Insert pawl end of gear rotating tool between teeth of one differential side gear. Pull handle of tool to rotate side gears and pinion gears. Remove pinion gears as they appear in case opening (fig. 2F-68).

NOTE: *It may be necessary to adjust the tension applied on the Belleville springs by the forcing screw before the gears can be rotated in the case.*

(18) Retain upper side gear and clutch pack in case by holding hand on bottom of rotating tool while removing forcing screw. Remove rotating tool, upper side gear, and clutch pack.

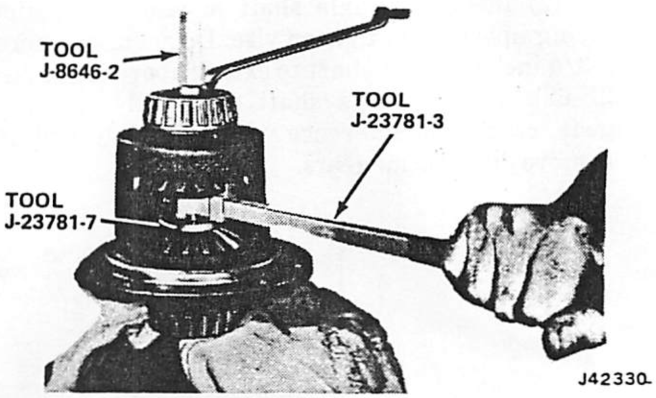

Fig. 2F-68 Pinion Gear Removal

(19) Remove differential case from axle shaft. Invert case with flange or ring gear side up and remove step plate tool, lower side gear, and clutch pack from case. Remove retainer clips from both clutch packs to allow separation of plates and discs (fig. 2F-69).

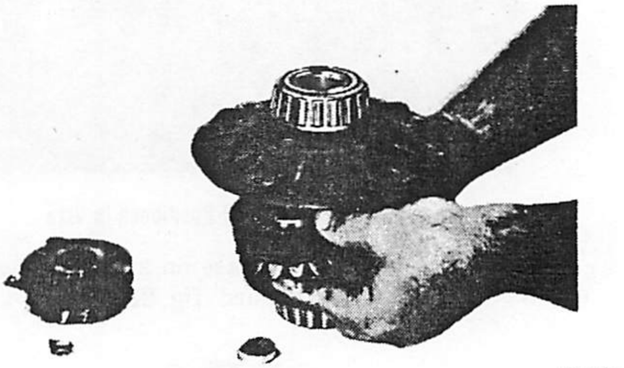

Fig. 2F-69 Side Gear and Clutch Pack Removal

Inspection

Clutch Plates and Disc

If any one member of either clutch pack shows evidence of excessive wear or scoring, the complete clutch pack must be replaced on both sides.

Differential Side and Pinion Gears

The gear teeth should be checked for extreme wear or possible cracks. The external teeth of the side gear which holds the clutch pack also should be checked for wear or cracks. If replacement of one gear is required due to wear, both side gears, pinion gears, and thrust washers must be replaced.

Pinion Mate Shaft

If excessive wear is evident on any one of the retainer clips, all clips should be replaced.

Differential Case

If scoring, wear, or metal pickup is evident on the machined surfaces, then replacement of the case is necessary.

Examples of radial groove clutch plate (A) and the concentric groove disc (B) are shown in figure 2F-70.

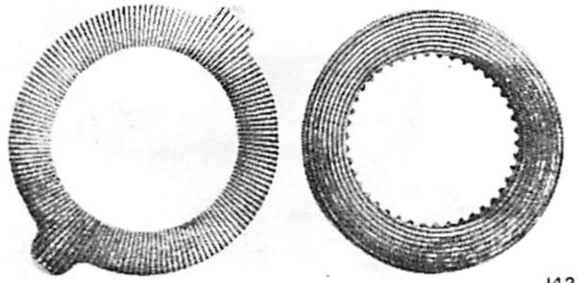

Fig. 2F-70 Clutch Plate and Disc Identification

ASSEMBLY

(1) Lubricate all differential components with Jeep axle lubricant or equivalent marked SAE 85W-90, GL-5.

(2) Assemble clutch packs. Install plates and discs in same position as when removed regardless of whether they are replacement or original parts.

(3) Install clutch retainer clips on ears of clutch plates. Be sure clutch packs are completely assembled and seated on ears of plates.

(4) Install clutch packs on differential side gears and install assembly in case.

NOTE: *Be sure clutch pack stays assembled on side gear splines and that retainer clips are completely seated in case pockets. To prevent pack from falling out of case, it will be necessary to hold them in place by hand while mounting case on axle shaft (fig. 2F-71).*

Fig. 2F-71 Mounting Differential Case on Axle Shaft

(5) Mount case assembly on axle shaft (fig. 2F-72).

CAUTION: *When installing differential case on axle shaft, be sure that splines of side gears are aligned with those of axle shaft. Be sure clutch pack is still properly assembled in case after installing case on axle shaft.*

Fig. 2F-72 Clutch Pack and Side Gear Installation

(6) Install step plate tool in side gear. Apply small daub of grease in centering hole of step plate.

(7) Install remaining clutch pack and side gear. Be sure clutch pack stays assembled on side gear splines and that retainer clips are completely seated in pockets of case (fig. 2F-72).

(8) Position gear rotating tool in upper side gear.

(9) Keep side gear and rotating tool in position by holding with hand. Insert forcing screw through top of case and thread into rotating tool (fig. 2F-73).

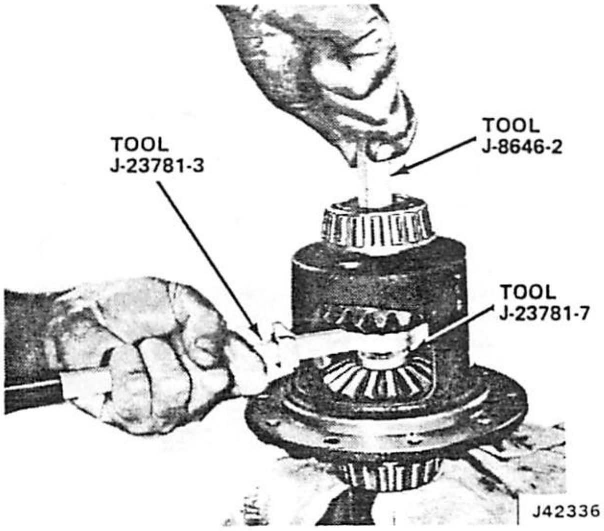

Fig. 2F-73 Threading Forcing Screw into Rotating Tool

(10) Install both differential pinion gears in case. Be sure bores of gears are aligned. Hold gears in place by hand (fig. 2F-74).

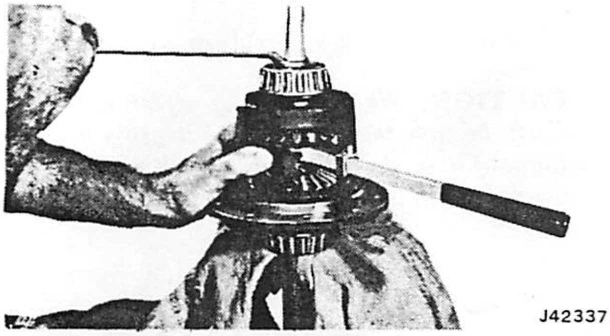

Fig. 2F-74 Pinion Gear Installation

(11) Tighten forcing screw to compress Belleville springs and provide clearance between teeth of pinion gears and side gears.

(12) Position pinion gears in case and insert rotating tool pawl between side gear teeth. Rotate side gears by pulling on tool handle and install pinion gears.

NOTE: *If the side gears will not rotate, Belleville spring load will have to be adjusted. If adjustment is necessary, loosen or tighten the forcing screw slightly until the gears will rotate.*

(13) Continue rotating side gears using rotating tool handle until shaft bores in both pinion gears are aligned with case bores.

(14) Lubricate both sides of pinion gear thrust washers.

(15) Tighten or loosen forcing screw to permit thrust washer installation.

(16) Install thrust washers. Use small screwdriver to guide washers into position (fig. 2F-75).

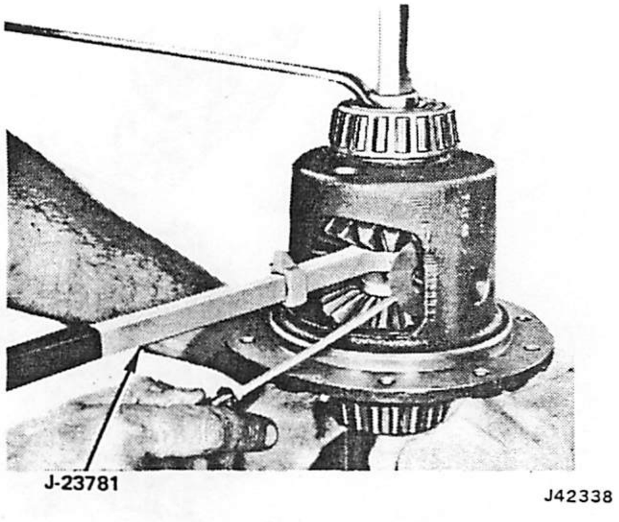

Fig. 2F-75 Pinion Gear Thrust Washer Installation

CAUTION: *Be sure the shaft bores in the washers and gears are aligned with the case bores.*

(17) Remove forcing screw, rotating tool, and step plate.

(18) Lubricate pinion mate shaft and seat shaft in case. Be sure snap ring grooves in shaft are exposed to allow snap ring installation (fig. 2F-76).

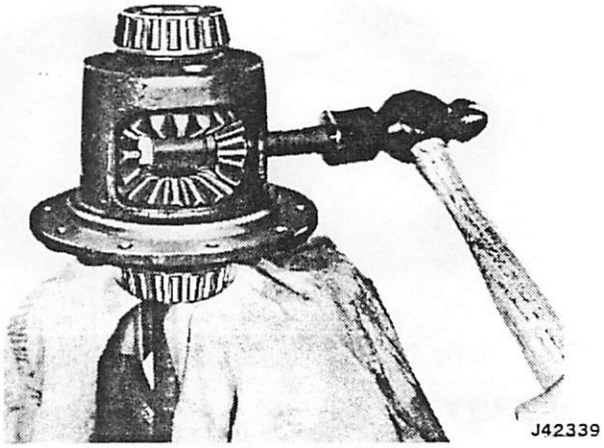

Fig. 2F-76 Pinion Mate Shaft Installation

(19) Install pinion mate shaft snap rings.

NOTE: *On Model 60 Trac-Lok, align the shaft and shaft retaining pin bore and case pin bore. Tap the shaft into position and install the retaining pin. If the case is mounted in a vise with the machined side of the ring gear flange facing upward, use a 5/16 inch (8 mm) diameter punch to install the retaining pin. Seat the pin until the punch bottoms in the case bore. If the case is mounted in a vise with the machined side of the ring gear flange facing downward, wrap a length of tape around a 3/16 inch (5 mm) diameter punch approximately 1-3/4 inch (4 cm) from the end of the punch. Install the retaining pin until the edge of the tape is flush with the pin bore.*

(20) Remove case from axle shaft.

(21) Install ring gear on case.

NOTE: *Use replacement ring gear bolts only. Do not reuse original bolts.*

(22) Align ring gear and case bolt holes and install ring gear bolts finger-tight only.

(23) Remount case on axle shaft and tighten bolts evenly to specified torque. Refer to Specifications.

(24) Install Trac-Lok differential assembly in axle housing. Follow service procedures previously outlined for conventional axles to complete differential and axle assembly servicing.

SERVICE REPLACEMENT

If the Trac-Lok unit must be replaced as an assembly, replace the unit as follows:

(1) Remove differential bearings and shims. Mark or tag each bearing and shim pack for assembly reference.

(2) Remove ring gear from case.

(3) Install original ring gear on replacement differential assembly. Be sure gear flange on replacement case is free of nicks or burrs.

(4) Inspect shims and bearings which were removed. If shims and bearings are worn or damaged, replace them. Be sure shims and bearings are used on same sides of replacement case as on old case.

(5) Install shims and differential bearings. Use step plate on bottom bearing to protect bearing from damage during installation of upper bearing. Seat bearings, using bearing driver tool.

(6) Lubricate differential bearings with 85W-90 gear lubricant and install differential assembly in axle housing.

(7) Follow service procedures previously outlined for conventional axles to complete differential and axle assembly servicing.

SPECIFICATIONS

Axle Specifications

Model 44 Axle	USA	Metric
Differential Bearing Preload	0.15 in	0.38 mm
Differential Side Gear-to-Case Clearance	.000-.006 in	0.000-0.15 mm
Ring Gear Backlash	.005-.010 in	0.12-0.25 mm
Pinion Bearing Break-Away Preload		
Original Bearings	10-20 in-lbs.	1-2 N·m
New Bearings	20-40 in-lbs.	2-5 N·m
Model 60 Axle		
Differential Bearing Preload	.015 in	0.38 mm
Differential Side Gear-to-Case Clearance	.000-.006 in	0.000-0.15 mm
Drive Gear-to-Pinion Backlash	.005-.009 in	0.12-0.15 mm
Drive Pinion Bearing Break-Away		
Original Bearings	10-20 in-lbs.	1-2 N·m
New Bearings	20-40 in-lbs.	2-5 N·m
AMC/Jeep Axle		
Axle Shaft End Play (Shims — Left Side Only)	.004-.008 in (.006 in desired)	0.10-0.20 mm (0.15 mm desired)
Pinion Bearing Preload (Collapsible Sleeve)	17-25 in-lbs.	2-3 N·m
Differential Bearing Preload (Shims)	.008 in	0.20 mm
Differential Case Flange Runout (Inspection only — no adjustment)	.002 in max.	0.05 mm max.
Ring Gear Backlash (Shims)	.005-.009 in (.008 in desired)	0.12-0.15 mm (0.20 mm desired)
Pinion Gear Standard Setting (Shims)	2.547 in	64-69 mm

60657B

Torque Specifications

Service Set-To Torques should be used when assembling components. Service In-Use Recheck Torques should be used for checking a pre-tightened item.

	USA (ft. lbs.)		Metric (N·m)	
	Service Set-To Torque	Service In-Use Recheck Torque	Service Set-To Torque	Service In-Use Recheck Torque
Model 30 Front Axle				
Axle Housing Cover Bolts	20	15-25	27	20-34
Differential Bearing Cap Bolts	40	35-50	54	47-68
Ring Gear-to-Case Bolts	55	45-65	75	61-88
Lower Ball Stud Nut	80 min.	—	108 min.	—
Pinion Nut	210	200-220	271	285-298
Universal Joint U-Bolts	15	13-18	20	18-24
Upper Ball Stud Nut	100 min.	—	136 min.	—
Upper Ball Stud Seat	50 min.	—	68 min.	—
Wheel-to-Hub Nuts	80	65-90	108	88-122

Torque Specifications

Service Set-To Torques should be used when assembling components. Service In-Use Recheck Torques should be used for checking a pre-tightened item.

	USA (ft-lbs)		Metric (N·m)	
	Service Set-To Torque	Service In-Use Recheck Torque	Service Set-To Torque	Service In-Use Recheck Torque
Model 44 Front Axle				
Axle Housing Cover Bolts	20	15-25	27	20-34
Support Plate Bolts/Nuts	30	25-35	41	34-47
Differential Bearing Cap Bolts	80	70-90	108	95-122
Disc Brake Shield Bolt	8	5-10	11	7-14
Disc Brake Shield Nuts	35	30-40	47	41-54
Ring Gear-to-Case Bolts	55	45-65	75	61-81
Lower Ball Stud Nut	80 min.	–	108 min.	–
Pinion Nut	210	200-220	271	285-298
Upper Ball Stud Nut	100 min.	–	136 min.	–
Upper Ball Stud Seat	50 min.	–	68 min.	–
Universal Joint Flange Bolts	35	25-45	47	34-61
Universal Joint Strap Bolts	16	15-19	22	20-26
Wheel-to-Hub Nuts	80	65-90	108	88-122
Model 60 Axle				
Axle Housing Cover Bolts	20	15-25	27	20-34
Support Plate Bolts/Nut	50	45-55	68	61-75
Differential Bearing Cap Bolts	80	70-90	108	95-122
Ring Gear-to-Case Bolts	105	100-110	142	135-149
Pinion Nut	260	250-270	352	339-366
Universal Joint Strap Bolts	16	15-19	22	20-26
Wheel-to-Hub Nuts	120	110-125	163	149-169
AMC/Jeep Axle				
Axle Housing Cover Bolts	170 in-lbs	150-190 in-lbs	19	17-21
Brake Tube-to-Rear Wheel Cylinder	97 in-lbs	90-105 in-lbs	11	10-12
Differential Bearing Cap Bolts	87	80-95	10	9-11
Ring Gear-to-Case Bolt	105	95-115	142	135-149
Rear Brake Support Plate Bolts	32	25-40	43	34-54
Axle Shaft-to-Hub Nuts	250 min.	250 min.	339 min.	–
Clamp Strap Bolts	16	15-19	22	15-19

All torque values given in foot-pounds and newton-meters with dry fits unless otherwise specified.

Refer to the Standard Torque Specifications and Capscrew Markings Chart in Section A of this manual for any torque specifications not listed above.

60657A

FRONT DRIVE HUBS

GENERAL

Manual front drive hubs are standard equipment on Jeep vehicles equipped with a Model 208 or 300 part-time four-wheel drive transfer case only.

NOTE: *Front drive hubs are not available nor recommended on Jeep vehicles equipped with the Model 219, Quadra-Trac, full-time four-wheel drive transfer case.*

Two different front drive hub models are used. Hub model M243 is used on CJ and Scrambler models (fig. 2F-77) and hub model 247 is used on Cherokee, Wagoneer and Truck models (fig. 2F-78). Both hub models are manually locked or unlocked.

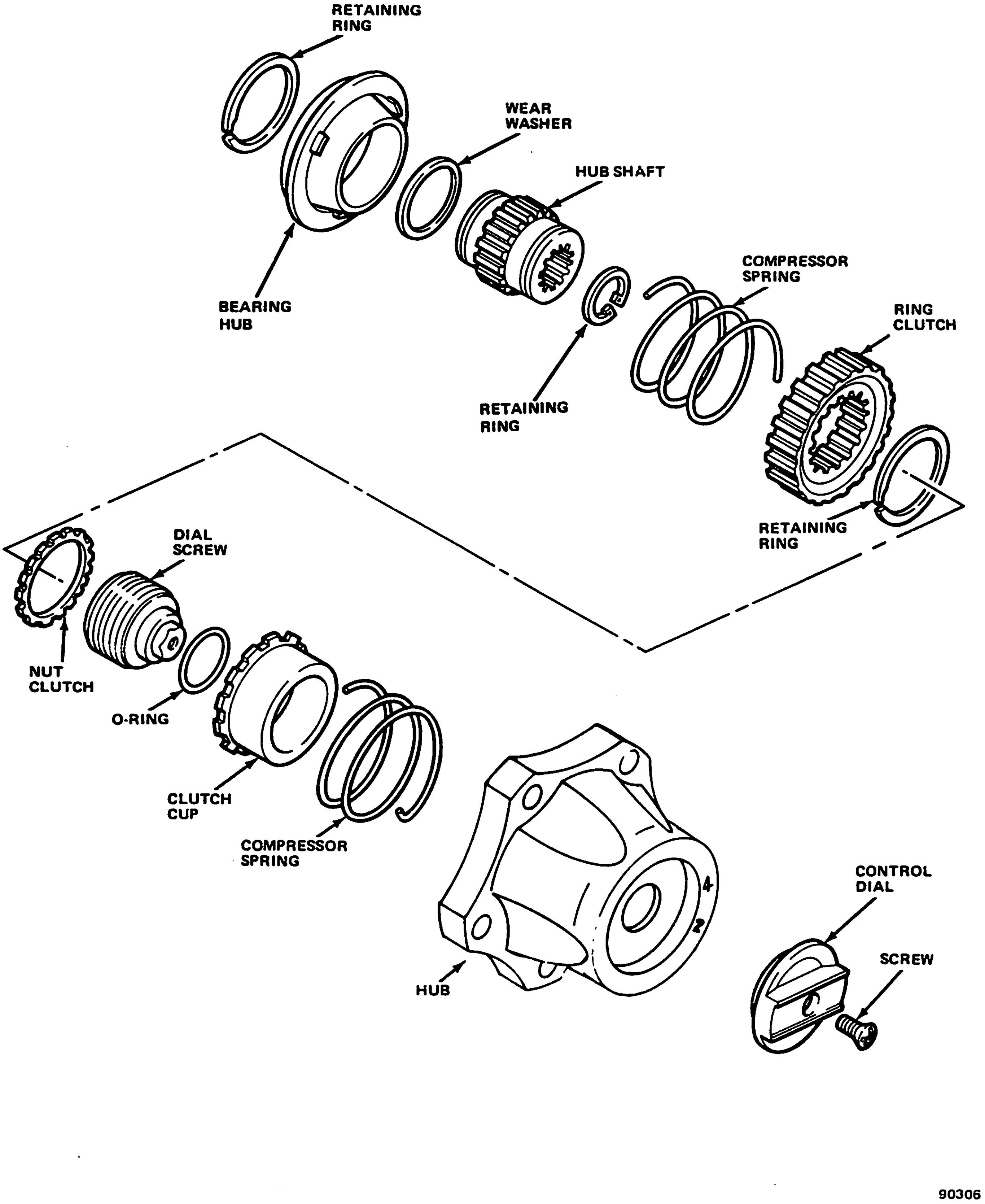

Fig. 2F-77 Model M253 Front Drive Hub—CJ and Scrambler Models

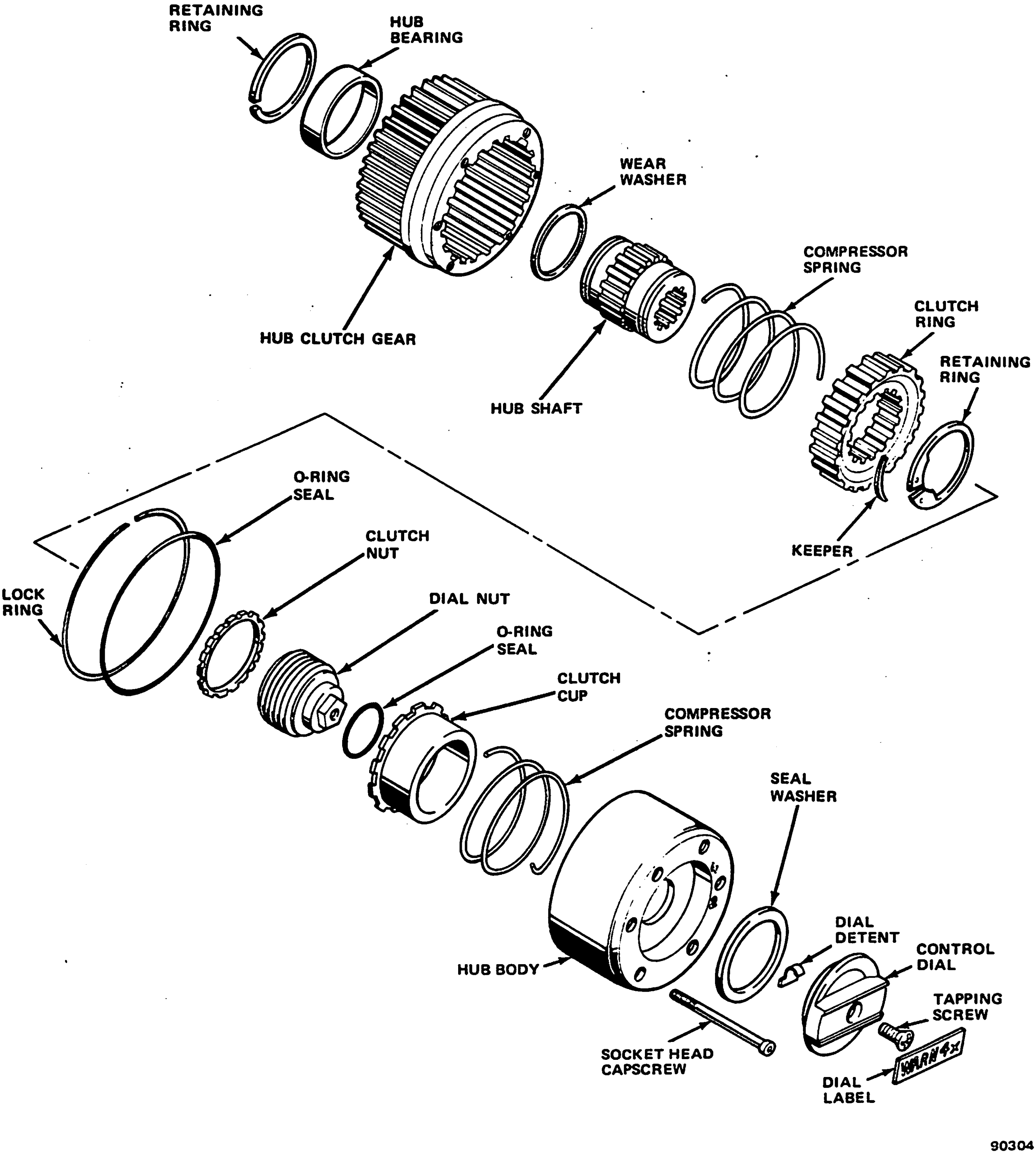

Fig. 2F-78 Model M247 Front Drive Hub—Cherokee-Wagoneer-Truck Models

LUBRICATION

Use Jeep all purpose chassis lubricant, or equivalent lithium base, waterproof, EP-type chassis lubricant. When servicing front drive hubs, apply a light coating of chassis lubricant to the hub internal components. Do not pack the hubs full of lubricant, apply a light coating only.

After operation in dusty areas or if the hubs become immersed in water, the hubs, as well as the wheel end components, should be removed, cleaned, and lubricated. This should avoid the possibility of premature wear or damage caused by foreign material in the hubs or by lubricant washout.

FRONT DRIVE HUB DIAGNOSIS

The manual front drive hubs used on Jeep vehicles should provide efficient and satisfactory operation when used and maintained properly. However, if a problem should occur, refer to the following diagnosis and repair procedures.

Control Dials Hard to Turn or Will Not Engage Completely

If the control dials become hard to turn or will not engage completely, the problem is usually due to a lack of lubricant, or dirt, water or foreign material in the hub cavity or in the dials themselves. In these cases, repair involves removing, cleaning and lubricating the hubs. However, in some cases, this condition may simply be the result of driveline torque load on the hub clutch. This situation is remedied by raising the vehicle front end and turning the front wheels forward or reverse to relieve the load.

If the problem is the result of internal damage to the hub body or clutch, the damaged component will have to be replaced to restore proper operation. Refer to Hub Service.

Noisy Operation

Chatter, clicking, grating, or similar type noises from the hubs may be the result of dirt, water or foreign material in the hub. This condition can be caused by a lack of hub maintenance, loose attaching bolts or screws, or damaged hub gaskets. Noise can become especially prevalent after fording streams or after operation in sandy areas. Service correction involves cleaning and lubricating the hubs.

However, if inspection indicates the problem is the result of damaged internal components, the damaged components will have to be replaced to restore proper operation. Refer to Hub Service.

Lubricant Leaks

Generally, lubricant leaks are caused by loose hub attaching bolts or screws, damaged hub gaskets or a damaged hub body or clutch assembly. Leakage may also be caused by over lubricating during service or normal maintenance operations. In each case, the hub should be removed, inspected and repaired as necessary.

Hub Internal Damage

Axle or hub clutch or hub body component damage may be the result of improper hub usage or maintenance. The vehicle should never be moved unless the hub control dials are fully engaged. In addition, on vehicles equipped with manual hubs, the vehicle should not be operated with the transfer case in low range and the hubs in the 4 x 2 or Free position. This places high torque loads on the rear axle.

If the hubs are not maintained properly, full engagement of the control dials may not occur. This can lead to accelerated wear or damage to hub internal components. If the vehicle is driven through water deep enough to cover the hubs or in sandy, dusty areas, the hubs should be cleaned and lubricated thoroughly.

HUB SERVICE

Model M253 and M247 front drive hubs are serviced as either a complete assembly or sub assembly such as the hub body or hub clutch assembly only. Do not attempt to disassemble these units. If the entire hub or a sub assembly has malfunctioned, replace the hub assembly or the problem sub assembly as a unit only.

Although the front drive hubs are serviced as assemblies or sub assemblies only, the hubs may be removed for cleaning inspection and lubrication purposes. Refer to the Hub Removal/Installation procedures for details.

HUB REMOVAL/INSTALLATION

Removal—Model M253

(1) Remove bolts and tabbed lockwashers attaching hub body to axle hub (fig. 2F-79). Retain bolts and washer.

(2) Remove hub body and gasket. Discard gasket.

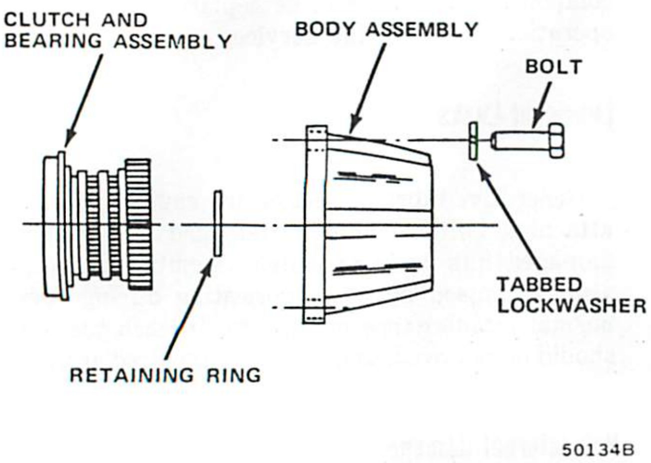

Fig. 2F-79 M253 Hub Removal/Installation

CAUTION: *Do not turn the hub control dial after removing the hub body.*

(3) Remove retaining ring from axle shaft (fig. 2F-78).

(4) Remove hub clutch and bearing assembly.

(5) Clean hub components in solvent. Dry them using compressed air, clean shop towels, or air dry. Be sure old lubricant, dirt, water or other foreign materials are flushed out.

(6) Inspect hub components for signs of wear or damage. Service components as necessary.

Installation—Model M253

CAUTION: *Do not turn the hub control dial until after the hub has been installed. The hub clutch nut and cup can be damaged serverly if the dial is rotated while the hub is off the vehicle.*

(1) Lubricate hub components with Jeep all purpose chassis lubricant or equivalent. Refer to Lubrication section. Apply light coat of lubricant only. Do not pack hub with lubricant.

(2) Install hub clutch and bearing assembly on axle shaft.

(3) Install retaining ring on axle shaft.

(4) Position new gasket on hub body and install hub body and gasket.

(5) Align bolt holes in axle and hub body and install bolts and tabbed lockwashers. Tighten bolts to 30 foot-pounds (41 N•m) torque.

(6) Raise vehicle front end.

(7) Turn hub control dials to 4 x 2 position and rotate wheels. Wheels should rotate freely. If wheels drag, check hub installation. Also, be sure control dials are fully engaged in 4 x 2 position.

(8) Lower vehicle.

Removal—Model M247

(1) Remove socket head screws from hub body assembly (fig. 2F-80).

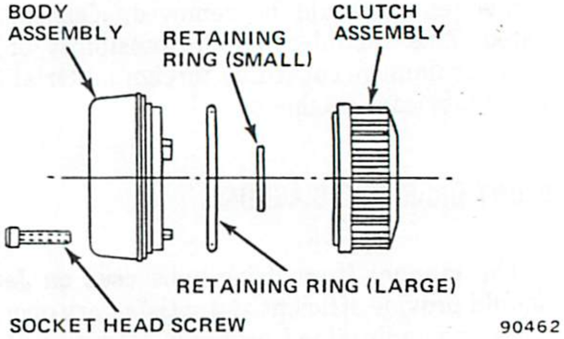

Fig. 2F-80 M247 Hub Removal/Installation

(2) Remove large retaining ring from axle hub. Remove small retaining ring from axle shaft.

(3) Remove hub clutch assembly.

(4) Clean hub components in solvent. Dry them using compressed air, clean shop towels, or air dry. Be sure old lubricant, dirt, water, or other foreign materials are flushed out.

(5) Inspect hub components for signs of wear or damage. Service components as necessary.

Installation—Model M247

(1) Lubricate hub components with Jeep all purpose chassis lubricant, or equivalent. Refer to Lubrication section. Apply light coat of lubricant only. Do not pack hub with lubricant.

(2) Install hub clutch assembly.

(3) Install small retaining ring on axle shaft. Install large retaining ring in axle hub.

(4) Install new O-ring or hub body if O-ring is being replaced.

(5) Position hub body in clutch. Align screw holes in clutch and body assemblies and install socket head screws. Tighten screws to 30 inch-pounds (3 N•m) torque.

(6) Raise vehicle front end.

(7) Turn both control dials to Free Position and rotate wheels. Wheels must rotate freely. If wheels drag, check hub installation. Also be sure control dials are fully engaged in position.

(8) Lower vehicle.

SPECIFICATIONS

Front Drive Hub Specifications

Hub Application	
M253	CJ, Scrambler Models
M247	Cherokee, Wagoneer, Truck
Hub Type:	2-position, manually operated locking hub
Lubricant	Use Jeep All-purpose Chassis Lubricant or equivalent lithium base, waterproof EP-type chassis lubricant
Torque Values:	
Socket Head Screws (M247)	30 in-pounds (3 N.m)
Hub Bolts (M253)	30 foot-pounds (41 N.m)
Hub Control Dial Positions:	
M247	Lock (4 WD)-Free (2 WD)
M253	4×4 (4 WD)-4 × 2 (2 WD)

90591

Tools

J-22575
PINION NUT SOCKET

J-25104
J-22661
REAR PINION OIL
SEAL INSTALLERS

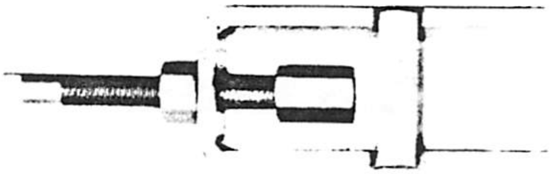

J-2498
AXLE SHAFT REMOVER

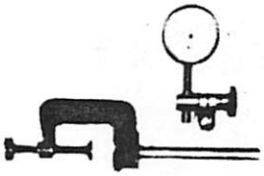

J-8001
DIAL INDICATOR SET

J-8614-2
J-8614-3
YOKE REMOVER
TOOLS

J-21788
AXLE SHAFT OIL
SEAL INSTALLER

J-2092 AXLE END
PLAY CHECKING TOOL

J-9233
PINION OIL SEAL REMOVER

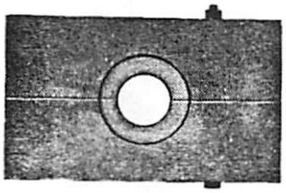

J-23674
AXLE SHAFT BEARING
REMOVER-INSTALLER

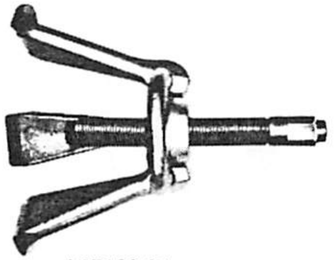

J-25109-01
AXLE HUB PULLER

J-21579
AXLE SHAFT PULLER

J-2619-01 SLIDE HAMMER

J-25135-01

80326

Tools (Continued)

J-21787
PINION FRONT
BEARING CUP
REMOVER

J-21786
PINION REAR
BEARING REMOVER

J-8608
PINION REAR BEARING
CUP INSTALLER

J-8611-01
PINION FRONT
BEARING CUP
INSTALLER

J-5223-24
CLAMP

J-5223-29
BOLT

J-5223-20
GAUGE BLOCK
AND PLUNGER

J-5223-25 OR -26
DISCS

J-24433
PINION BEARING
INSTALLER SLEEVE

J-21784
DIFFERENTIAL
BEARING INSTALLER

J-5223-4
ARBOR

J-5223-03
PINION DEPTH SETTING GAUGE SET

J-22697 PINION REAR
BEARING INSTALLER

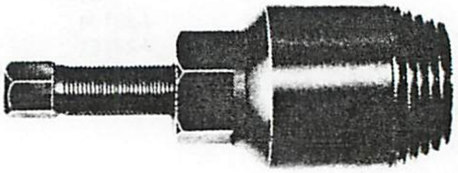

J-9233
PINION SEAL REMOVER

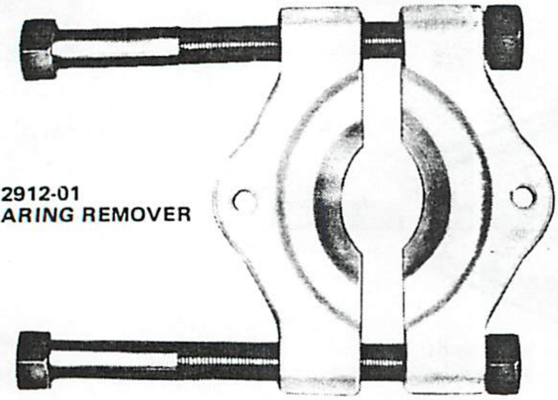

J-22912-01
BEARING REMOVER

J-22661
PINION SEAL
INSTALLER

J-5590
PINION BEARING
INSTALLER SLEEVE

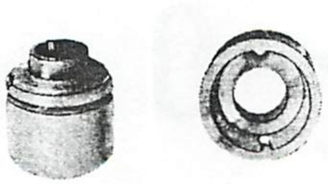

J-28648 DIFFERENTIAL
SEAL INSTALLER
MODELS 44-60

J-25131 SEAL INSTALLER

80327A

Tools (continued)

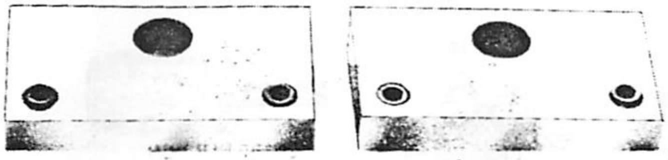

J-24385-15
ADAPTER

J-7079-2
DRIVER HANDLE (NON-THREADED)

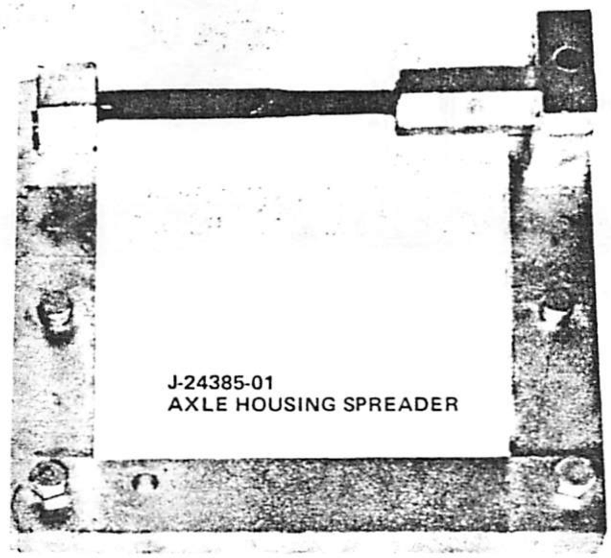

J-24385-01
AXLE HOUSING SPREADER

J-8092
DRIVER HANDLE (THREADED)

J-25104
BEARING INSTALLER

J-25101
BEARING CUP INSTALLER

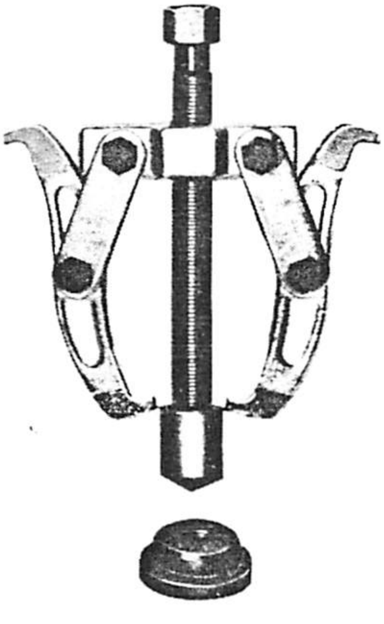

J-22888
BEARING PULLER SET

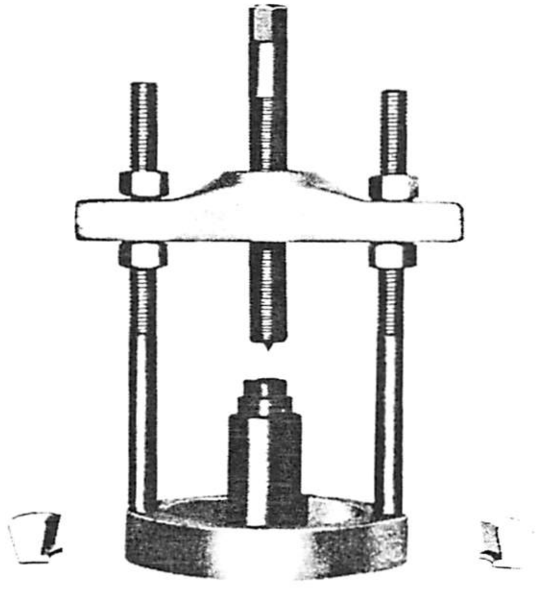

J-29721 DIFFERENTIAL
BEARING REMOVER TOOL SET

J-24430
BEARING INSTALLER

80327B

J-8646-2 FORCING SCREW AND
J-23781-3 GEAR ROTATING TOOL

J-23781-7
STEP PLATE

80328

Tools (Continued)

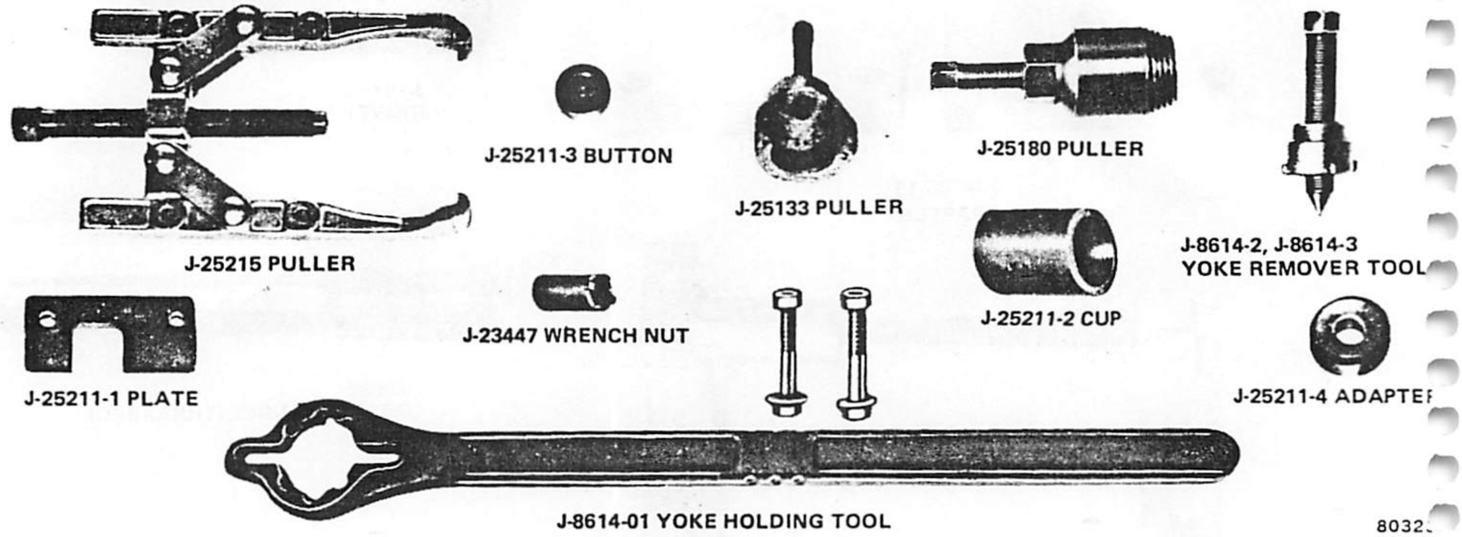

J-8614-01 YOKE HOLDING TOOL

8032

BRAKES 2G

SECTION INDEX

GENERAL INFORMATION

GENERAL

Jeep vehicles are equipped with single piston, low drag, floating caliper front disc brakes and self-energizing rear drum brakes.

The caliper used on CJ and Scrambler models is positioned over the rotor and slides on two mounting pins which maintain caliper position relative to the rotor and caliper anchor plate. The caliper used on Cherokee, Wagoneer and Truck models slides on pivot bolts installed in the support shield and bracket assembly. Refer to the Brake Size and Application Chart for size and application details.

Two different rear drum brake designs are used. They are similar in construction and operation but differ in method of automatic adjustment. Rear drum brakes on CJ and Scrambler models have cable operated automatic adjusters while rear drum brakes on Cherokee, Wagoneer and Truck models have linkage operated adjusters.

A dual reservoir master cylinder that provides separate hydraulic systems for the front and rear brake units is used on all models.

A three-function combination valve is used on all Jeep models. The valve consists of a one-piece housing containing a front brake metering valve, pressure differential warning valve, and rear brake proportioning valve.

Three power brake units are used. CJ and Scrambler models with optional power assist brakes use an 8 inch (20.3 cm) single diaphragm power unit. Cherokee, Wagoneer and J-10 Truck models use a 9-1/2 inch (24.1 cm) single diaphragm power unit. J-20 Truck models use a 9-1/2 inch (24.1 cm) tandem diaphragm power unit.

BRAKE DIAGNOSIS

Brake system preliminary diagnosis procedures are outlined in Brake Diagnosis Guides A and B. Guide A applies to all vehicles and Guide B applies to vehicles equipped with power brakes only. Do not use Guide B until all of the steps outlined in Guide A have been completed.

The procedures outlined in the Brake Diagnosis Guides are provided as a method for determining the general problem area. After the general problem area has been defined, refer to the Power Unit, Disc Brake, and Drum Brake Service Diagnosis Charts to determine the specific cause of a brake problem.

In most cases, an owner will describe a brake problem as one or more of the conditions listed in the Service Diagnosis Charts. However, to ensure an accurate diagnosis and avoid ineffective repair, road test the vehicle (if possible), perform the procedures outlined in the Diagnosis Guides, and then consult the Service Diagnosis Charts before attempting problem correction.

Brake Diagnosis Guide A

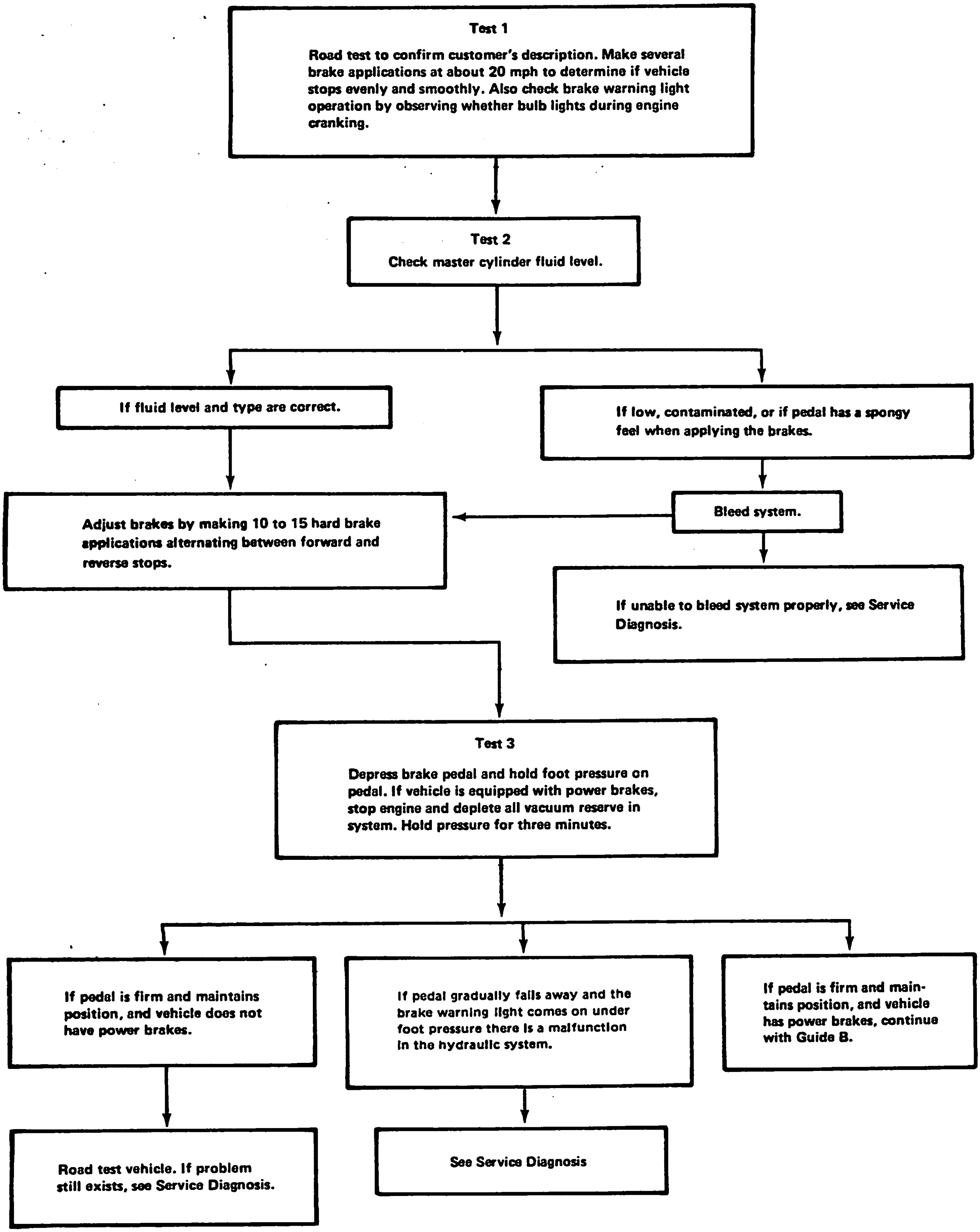

Test 1

Road test to confirm customer's description. Make several brake applications at about 20 mph to determine if vehicle stops evenly and smoothly. Also check brake warning light operation by observing whether bulb lights during engine cranking.

Test 2

Check master cylinder fluid level.

If fluid level and type are correct.

If low, contaminated, or if pedal has a spongy feel when applying the brakes.

Bleed system.

If unable to bleed system properly, see Service Diagnosis.

Adjust brakes by making 10 to 15 hard brake applications alternating between forward and reverse stops.

Test 3

Depress brake pedal and hold foot pressure on pedal. If vehicle is equipped with power brakes, stop engine and deplete all vacuum reserve in system. Hold pressure for three minutes.

If pedal is firm and maintains position, and vehicle does not have power brakes.

If pedal gradually falls away and the brake warning light comes on under foot pressure there is a malfunction in the hydraulic system.

If pedal is firm and maintains position, and vehicle has power brakes, continue with Guide B.

Road test vehicle. If problem still exists, see Service Diagnosis.

See Service Diagnosis

Brake Diagnosis Guide B

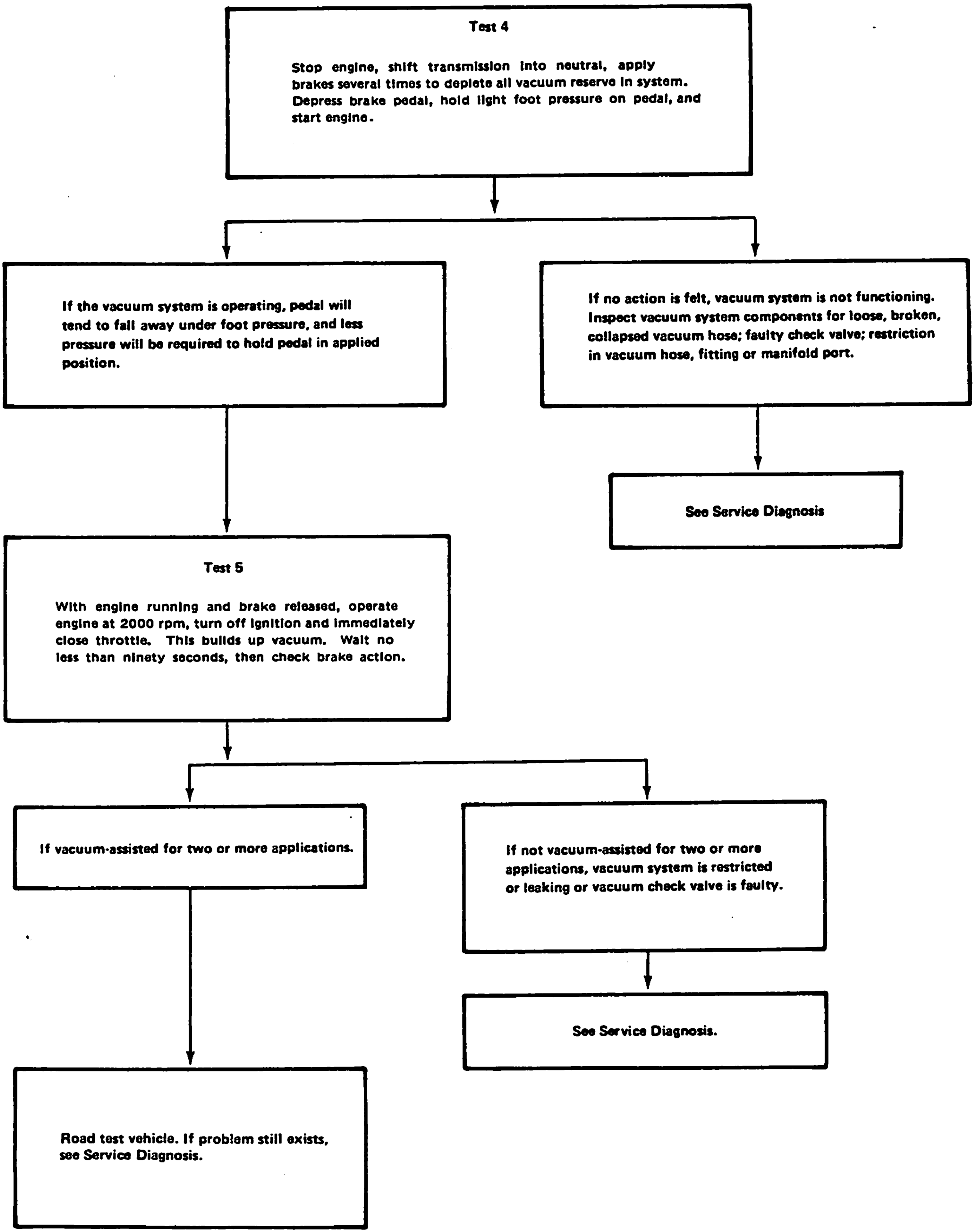

Test 4

Stop engine, shift transmission into neutral, apply brakes several times to deplete all vacuum reserve in system. Depress brake pedal, hold light foot pressure on pedal, and start engine.

If the vacuum system is operating, pedal will tend to fall away under foot pressure, and less pressure will be required to hold pedal in applied position.

If no action is felt, vacuum system is not functioning. Inspect vacuum system components for loose, broken, collapsed vacuum hose; faulty check valve; restriction in vacuum hose, fitting or manifold port.

See Service Diagnosis

Test 5

With engine running and brake released, operate engine at 2000 rpm, turn off ignition and immediately close throttle. This builds up vacuum. Wait no less than ninety seconds, then check brake action.

If vacuum-assisted for two or more applications.

If not vacuum-assisted for two or more applications, vacuum system is restricted or leaking or vacuum check valve is faulty.

See Service Diagnosis.

Road test vehicle. If problem still exists, see Service Diagnosis.

70894

Service Diagnosis-Power Unit

Condition	Possible Cause	Correction
HARD PEDAL (NO POWER ASSIST)	(1) Refer to EXCESSIVE PEDAL EFFORT.	(1) Refer to EXCESSIVE PEDAL EFFORT in Service Diagnosis Charts.
	(2) Loss of vacuum to power unit.	(2) Check for loose hose or check valve seal. Check for collapsed or damaged hose. Inspect vacuum check valve for damage or leak. Replace parts as required.
	(3) Internal malfunction in power unit.	(3) Replace power unit.
SLOW RETURN OF BRAKE PEDAL	(1) Power unit bellcrank pivot pins binding (CJ and Scrambler only) or, pedal binding. See PULLS and GRABBING BRAKES in Brake Service Dagnosis Charts.	(1) Lube all pedal pivot points. Remove, clean, lube and install pivot pins.
	(2) Internal malfunction in power unit.	(2) Replace power unit.
GRABBING OR DRAGGING BRAKES	(1) Bellcrank pivot pins binding (CJ and Scrambler only).	(1) Remove, clean, lubricate, and install pivot pins.
	(2) Refer to PULLS and GRABBING BRAKES in Service Diagnosis Charts.	(2) Refer to PULLS and GRABBING BRAKES in Service Diagnosis Charts.
	(3) Push rod (in power unit) binding due to corrosion or burrs on push rod.	(3) Check and correct as required. Do not lube push rod. Clean push rod with brake fluid and clean cloth only.
	(4) Internal malfunction in power unit.	(4) Replace power unit.

60636

Service Diagnosis-Drum Brakes

Condition	Possible Cause	Correction
LOW PEDAL OR PEDAL GOES TO TOE BOARD	(1) Low fluid level.	(1) Fill reservoir with approved brake fluid.
	(2) Excessive clearance between lining and drums.	(2) Adjust brakes.
	(3) Automatic adjusters not working.	(3) Make forward and reverse stops; if pedal stays low, repair faulty adjusters.
	(4) Leaking brake lines.	(4) Repair or replace faulty parts.

60637A

Service Diagnosis-Drum Brakes (Continued)

Condition	Possible Cause	Correction
LOW PEDAL OR PEDAL GOES TO TOE BOARD (Continued)	(5) Leaking wheel cylinders.	(5) Overhaul wheel cylinder.
	(6) Internal leak in master cylinder.	(6) Overhaul master cylinder.
	(7) Air in system.	(7) Bleed system.
	(8) Improper brake fluid.	(8) Flush system and refill with approved fluid.
SPRINGY, SPONGY PEDAL	(1) Air trapped in hydraulic system.	(1) Remove air by bleeding.
	(2) Improper brake fluid.	(2) Flush and bleed system; use approved brake fluid.
	(3) Improper lining thickness or location.	(3) Install new lining or replace shoe and lining.
	(4) Drums worn too thin, (beyond 0.060 (1.52 mm) oversize specification)	(4) Replace drum(s) as required.
	(5) Master cylinder filler vent clogged	(5) Clean vent or replace cap; bleed brakes.
	(6) Hoses-lines collapsed, kinked, leaking.	(6) Replace as required.
	(7) Master cylinder compensator port blocked.	(7) Disassemble master cylinder. Repair as required.
EXCESSIVE PEDAL PRESSURE REQUIRED TO STOP VEHICLE	(1) Brake adjustment not correct.	(1) Adjust brakes.
	(2) Incorrect lining.	(2) Install new linings.
	(3) Grease or fluid-soaked lining.	(3) Repair grease seal or wheel cylinder. Install new linings.
	(4) Improper fluid.	(4) Flush system; use approved brake fluid.
	(5) Frozen master or wheel cylinder pistons.	(5) Overhaul master or wheel cylinders.
	(6) Brake pedal binding on shaft.	(6) Lubricate pivot points.
	(7) Linings watersoaked.	(7) Drive with brakes lightly applied to dry linings.
	(8) Glazed linings.	(8) Replace linings.
	(9) Bell-mouthed, barrel-shaped, or scored drums.	(9) Replace or resurface drums in left and right hand pairs.

60637B

Service Diagnosis-Drum Brakes (Continued)

Condition	Possible Cause	Correction
LIGHT PEDAL PRESSURE-BRAKES TOO SEVERE	(1) Brake adjustment not correct.	(1) Adjust brakes.
	(2) Loose support plates.	(2) Tighten support plates.
	(3) A small amount of grease or fluid on linings.	(3) Replace the linings.
	(4) Pedal linkage binding, or power unit bellcrank pivot pins binding (CJ and Scrambler only).	(4) Lube linkage and bellcrank pivot pins.
	(5) Internal bind in power unit.	(5) Replace power unit.
	(6) Incorrect lining.	(6) Install new linings.
	(7) Lining loose on shoe.	(7) Replace lining or shoe and lining.
	(8) Bell-mouthed, barrel-shaped, or scored drums.	(8) Turn drums in pairs or replace.
	(9) Combination valve faulty.	(9) Replace combination valve.
PULSATING BRAKE PEDAL	(1) Drums out-of-round.	(1) Refinish or replace drums.
	(2) Loose brake drum on hub.	(2) Tighten.
	(3) Worn or loose wheel bearings.	(3) Replace or adjust.
	(4) Bent shoes or linings.	(4) Replace shoe-lining assembly as required.
	(5) Bent rear axle shaft.	(5) Replace axle shaft.
	(6) Loose or bent support plate.	(6) Tighten or replace support plate.
BRAKE FADE	(1) Incorrect lining.	(1) Replace lining.
	(2) Air in lines or improper brake fluid.	(2) Bleed system. Drain and flush if fluid is improper type.
	(3) Master cylinder primary piston worn, or bore scored, corroded.	(3) Disassemble master cylinder. Repair as required.
ALL BRAKES DRAG (ADJUSTMENT IS KNOWN TO BE CORRECT)	(1) Power unit bellcrank pivot pins binding (CJ and Scrambler only).	(1) Lubricate pedal pivot or bellcrank pivot pins.
	(2) Improper fluid.	(2) Replace fluid and rubber parts.
	(3) On power brakes (CJ and Scrambler only) push rod height is incorrect.	(3) Adjust push rod height.

60637C

Service Diagnosis-Drum Brakes (Continued)

Condition	Possible Cause	Correction
ALL BRAKES DRAG (ADJUSTMENT IS KNOWN TO BE CORRECT (Continued)	(4) Compensating or bypass port of master cylinder closed.	(4) Open with compressed air.
	(5) Use of inferior hydraulic fluid or rubber parts. (Swollen cups, corroded wheel or master cylinder bores.	(5) Overhaul wheel and/or master cylinder.
BRAKE PEDAL TRAVEL DECREASING	(1) Master cylinder compensating port plugged.	(1) Use compressed air to unplug.
	(2) Power unit bellcrank pivot pins binding (CJ and Scrambler only) or pedal pivot binding on manual brakes.	(2) Lube pedal pivot or pivot pins.
	(3) Swollen cup in master cylinder.	(3) Replace rubber parts. Flush system.
	(4) Master cylinder piston not returning.	(4) Overhaul master cylinder.
	(5) Wheel cylinder pistons sticking.	(5) Overhaul wheel cylinder.
ONE WHEEL DRAGS	(1) Weak or broken brake shoe retracting springs.	(1) Replace the defective brake shoe springs and lubricate the brake shoe ledges.
	(2) Power unit bellcrank pivot pins binding (CJ and Scrambler only) or pedal pivot binding.	(2) Lube pedal pivot or pivot pins.
	(3) Insufficient brake shoe-to-drum clearance.	(3) Adjust brakes. Repair automatic adjusters if necessary.
	(4) Loose wheel bearings.	(4) Adjust wheel bearings.
	(5) Wheel cylinder piston cups swollen and distorted.	(5) Overhaul wheel cylinders.
	(6) Pistons sticking in wheel cylinder.	(6) Clean or replace pistons; clean cylinder bore.
	(7) Restriction in brake line.	(7) Clean out or replace.
	(8) Loose anchor pin.	(8) Adjust and tighten lock nut.
	(9) Parking brake components seized or incorrectly adjusted.	(9) Repair or replace parts as necessary.
E WHEEL LOCKS	(1) Contaminated linings.	(1) Replace the linings.
	(2) Worn tire treads.	(2) Replace tire or, match up tire treads from side to side.

60637D

Service Diagnosis-Drum Brakes (Continued)

Condition	Possible Cause	Correction
BRAKES GRAB OR WON'T HOLD IN WET WEATHER	(1) Linings water-soaked.	(1) Dry out linings by driving with brakes lightly applied.
	(2) Dirt, water in drums.	(2) Clean drums.
	(3) Bent support plate allowing excessive water to enter drum.	(3) Replace support plate.
	(4) Scored drums.	(4) Replace or resurface in pairs.
BRAKES SQUEAK	(1) Support plate bent or shoes twisted.	(1) Replace damaged parts.
	(2) Metallic particles or dust imbedded in lining.	(2) Sand the surfaces of the linings and drums. Remove all particles of metal that may be found in the surface of the linings.
	(3) Lining rivets loose or lining not held tightly against the shoe at the ends.	(3) Replace rivets. Replace shoe lining assemblies if damaged.
	(4) Drums distorted.	(4) Turn or replace drums.
	(5) Shoes scraping on support plate ledges.	(5) Lubricate.
	(6) Weak or broken hold-down springs.	(6) Replace defective parts.
	(7) Loose wheel bearings.	(7) Adjust bearings.
	(8) Charred lining.	(8) Replace lining.
	(9) Loose support plate, anchor, drum, or wheel cylinder.	(9) Tighten.
	(10) Linings located wrong on shoes.	(10) Install linings correctly.
REAR BRAKES DRAG	(1) Adjustment not correct.	(1) Adjust brake shoes and parking brake mechanism.
	(2) Parking brake cables frozen.	(2) Lubricate or replace as required.
	(3) Dirty lining.	(3) Replace lining.
	(4) Wheel cylinder cups swollen or piston sticking.	(4) Overhaul cylinders.
	(5) Weak retracting springs.	(5) Replace springs.
	(6) Shoes binding on support plate.	(6) Lubricate support plate ledges.

60637E

Service Diagnosis-Drum Brakes (Continued)

Condition	Possible Cause	Correction
VEHICLE PULLS TO ONE SIDE	(1) Grease or fluid-soaked lining.	(1) Locate and correct leakage; replace linings.
	(2) Adjustment not correct.	(2) Adjust the brakes.
	(3) Loose wheel bearings, loose support plate(s) or loose spring bolts.	(3) Adjust wheel bearing; tighten support plate(s) and tighten spring bolts.
	(4) Linings not of specified kind or primary and secondary shoes reversed.	(4) Install new linings.
	(5) Power unit bellcrank pivot pins binding (CJ and Scrambler only).	(5) Lube pivot pins.
	(6) Tires not properly inflated or unequal wear of tread. Different tread design side to side.	(6) Inflate the tires to recommended pressures. Rotate tires so that tread surfaces of similar design and equal wear will be installed on the front wheels.
	(7) Water, mud, or foreign matter in brakes.	(7) Remove foreign material from brake parts and inside of the drums. Lubricate the shoe ledges and the rear brake cable ramps.
	(8) Wheel cylinder sticking.	(8) Overhaul or replace wheel cylinder.
	(9) Weak or broken retracting springs.	(9) Check springs. Replace bent, distorted or cracked springs.
	(10) Out-of-round drums.	(10) Resurface or replace drums in left and right hand pairs (both front and both rear).
	(11) Brake dragging.	(11) Check for loose lining. Repair or replace as required.
	(12) Broken spring or loose U-bolts.	(12) Replace spring or tighten U-bolts.
	(13) Loose steering components.	(13) Tighten or repair and adjust as required.
	(14) Unequal camber.	(14) Replace axle housing.
	(15) Clogged or crimped brake line.	(15) Repair or replace line.
	(16) Wheel cylinder incorrect size.	(16) Replace with correct cylinders.
	(17) Worn steering knuckle bearings.	(17) Replace.

60637F

Service Diagnosis-Drum Brakes (Continued)

Condition	Possible Cause	Correction
BRAKES CHATTER	(1) Incorrect lining-to-drum clearance.	(1) Adjust to recommended clearances.
	(2) Loose brake support plate.	(2) Tighten support plate.
	(3) Grease, fluid, road dust on lining.	(3) Clean out dust; replace grease and fluid-soaked lining.
	(4) Weak or broken retractor spring.	(4) Replace.
	(5) Loose wheel bearings.	(5) Adjust.
	(6) Drums out-of-round.	(6) Turn or replace drums in pairs.
	(7) Cocked or distorted shoes.	(7) Straighten or replace.
	(8) Tapered or barrel-shaped drums.	(8) Turn or replace drums in pairs.
SHOE CLICK	(1) Shoes lift off support plate and snap back.	(1) Change drums side to side or turn drums (in pairs).
	(2) Holddown springs weak.	(2) Replace springs.
	(3) Shoe bent.	(3) Replace shoes on both sides.
	(4) Grooves in support plate ledges.	(4) Replace support plate.

60637G

Service Diagnosis-Disc Brakes

Condition	Possible Cause	Correction
BRAKE CHATTER OR ROUGHNESS. BRAKE PEDAL PULSATES	(1) Excessive rotor lateral runout.	(1) Check rotor runout. Refinish if not to specs (refer to Rotor Measurements).Replace if unable to refinish.
	(2) Excessive rotor thickness variation.	(2) Check rotor thickness variation. Refinish if out of spec. Replace if unable to refinish.
	(3) Loose or worn wheel bearings.	(3) Adjust to specs. Replace if worn or damaged.
	(4) Rear drums out-of-round.	(4) Check runout. If not to specs turn drum. Do not remove more than .060 inch (1.52 mm)

60638A

Service Diagnosis-Disc Brakes (Continued)

Condition	Possible Cause	Correction
BRAKE CHATTER OR ROUGHNESS. BRAKE PEDAL PULSATES (Continued)	(5) Disc brake shoes reversed (steel side of shoe riding on rotor).	(5) Replace rotor and shoes.
	(6) Shoes bent or linings worn.	(6) Replace shoes.
EXCESSIVE PEDAL EFFORT REQUIRED	(1) Malfunction in power brake unit.	(1) Check operation. Refer to Power Brake Units.
	(2) Malfunction in front or rear brake system (dual master cylinder) such as: wheel cylinder leaks, defective brake lines, caliper piston seal leak, master cylinder piston cups not holding pressure.	(2) Check both brake systems and correct as required. Check for failed brake warning light if brake failure occurred and light did not operate.
	(3) Lining worn.	(3) Check and replace linings as required.
	(4) Caliper piston sticking.	(4) Rebuild caliper.
	(5) Brake fade caused by incorrect or non-recommended linings.	(5) Replace with correct or recommended lining.
	(6) Incorrect master cylinder.	(6) Check and replace if required.
EXCESSIVE PEDAL TRAVEL	(1) Low fluid level.	(1) Add fluid as required.
	(2) Leak in system.	(2) Inspect and correct as required.
	(3) Air in system.	(3) Bleed brakes.
	(4) Rear brakes not adjusting properly.	(4) Adjust rear brakes and repair automatic adjusters.
	(5) Worn lining.	(5) Replace linings. If wear is excessive or premature, check for incorrect lining, sticking caliper pistons, binding park brake cables, shoe drag on support plate, weak return springs on drum brakes, improper rear brake adjustment.
	(6) Bent or broken shoe.	(6) Replace as required.
	(7) Master cylinder mounting bolts loose.	(7) Check and retighten.
	(8) Rotor thickness or drum diameter below specification.	(8) Inspect, measure and replace as required.
DRAGGING BRAKES NOTE: A very light drag occuring after releasing the brake pedal is a characteristic of disc brakes.	(1) Master cylinder pistons not returning properly.	(1) Remove cover, check for spurt of fluid at compensator holes as brake pedal is depressed. Rebuild master cylinder if fluid spurt is not observed. Inspect compensator ports for blockage, use compressed air to clear passages.

60638B

Service Diagnosis-Disc Brakes (Continued)

Condition	Possible Cause	Correction
DRAGGING BRAKES (Continued)	(2) Restrictions in brake lines or hoses.	(2) Check for kinks or dents in steel lines. Check rubber hoses for swelling or restrictions inside hose.
	(3) Incorrect parking brake adjustment.	(3) Check and readjust to specification. Inspect cables for bind or frayed conditions.
	(4) Rear shoes not returning to normal position.	(4) Return springs weak. Shoes dragging on support plate due to lack of lube or ridges on support plate ledges. Wheel cylinder cups swollen or pistons sticking. Repair or replace faulty parts as required.
	(5) Caliper pistons not releasing. Pistons stuck due to piston scoring or corrosion or piston cocking in bore.	(5) Repair or replace pistons or caliper as required.
	(6) Lines to combination valve installed incorrectly.	(6) Check and correct as required. Port marked inlet goes to master cylinder; port marked outlet goes to calipers.
	(7) Bind in brake pedal or power unit bellcrank pivot pins (CJ and Scrambler only).	(7) Lube pedal pivot or pivot pins.
	(8) Check valve installed in master cylinder outlet port.	(8) Check outlet. Remove valve if present. Bleed brakes.
GRABBING BRAKES	(1) Refer to all conditions listed under PULLS WHEN BRAKES ARE APPLIED.	(1) See PULLS WHEN BRAKES ARE APPLIED.
	(2) Power brake unit malfunction or bellcrank pivot pins binding (CJ and Scrambler only).	(2) Check operation and replace or repair as required. Refer to POWER UNIT SERVICE DIAGNOSIS Chart.
	(3) Combination valve malfunction.	(3) Replace valve and bleed system.
	(4) Incorrect power unit.	(4) Check and replace as required.
PULLS WHEN BRAKES ARE APPLIED	(1) Incorrect tire pressures.	(1) Inflate to spec.
	(2) Mismatched tires on same axle.	(2) Install equal size, type tires.
	(3) Wheel bearings misadjusted or worn.	(3) Adjust or replace as required.

60638C

Service Diagnosis-Disc Brakes (Continued)

Condition	Possible Cause	Correction
PULLS WHEN BRAKES ARE APPLIED (Continued)	(4) Malfunction in caliper.	(4) Check for stuck piston.
	(5) Damaged or contaminated shoe and lining (grease on lining or bent shoe).	(5) Replace shoe and lining on both sides. Replace axle seals, wheel cylinder cups, or caliper piston seals, if leaking.
	(6) Rear brake problem: automatic adjusters inoperable, contaminated lining, defective wheel cylinders, seized or improperly adjusted park brake cables, shoes binding on support plate, linings worn, linings charred or cracked, bent support plate, weak retracting springs, drums out-of-round.	(6) Inspect and repair or replace malfunctioning parts. Check for equal size wheel cylinders on rear brakes.
	(7) Loose calipers.	(7) Check mounting bolt torque, inspect threads on bolts for galling or stripped threads, check support plate for broken welds.
	(8) Loose suspension parts.	(8) Inspect and correct as required.
	(9) Front end out of alignment.	(9) Check and correct as required.
	(10) Lining soaked with water after operation in heavy rains, or flooding conditions.	(10) Allow lining to air dry, or while driving, keep brakes lightly applied to warm up lining and evaporate water.
	(11) Disc brake rotor out of tolerance.	(11) Check and refinish or replace as required.
REAR DRUM BRAKES SKID PREMATURELY ON HARD BRAKE APPLICATION	(1) Combination valve proportioner section malfunctioning.	(1) Replace valve and bleed brakes.
	(2) Check items listed under PULLS and GRABBING.	(2) See PULLS and GRABBING.
SPONGY PEDAL	(1) Air in system.	(1) Bleed brakes. Inspect for broken lines, loose fittings, leaking caliper pistons, or wheel cylinders; check rubber seal on master cylinder cover. Check cover itself for distortion or cracks, check all bleed valves for proper torque.
	(2) Rear drums thin or cracked.	(2) Inspect and correct as required.
	(3) Calipers loose.	(3) Check mounting bolt torque.
	(4) Loose master cylinder or brake booster attaching parts.	(4) Check and correct as required.

60638D

Service Diagnosis-Disc Brakes (Continued)

Condition	Possible Cause	Correction
SPONGY PEDAL (Continued)	(5) Compensator port blocked in master cylinder. (6) Improper (low quality) brake fluid in system. Fluid boils and becomes aerated.	(5) Check and correct as required. (6) Drain and flush system.

60638E

BRAKE PEDAL

A suspended brake pedal is used on all models. The pedal is attached to the pedal support bracket by a pivot bolt (figs. 2G-1 and 2G-2). The pivot bolt serves as both attaching part and pivoting member for the pedal.

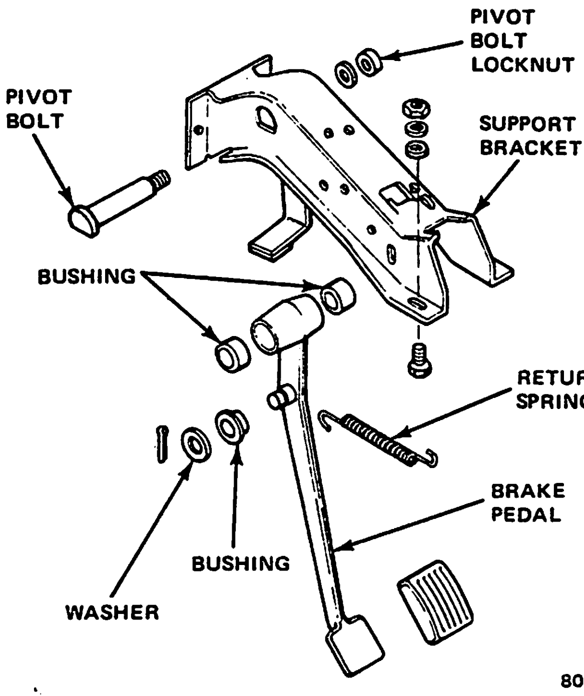

Fig. 2G-1 Brake Pedal—CJ and Scrambler Models

The pedal linkage should be lubricated and inspected regularly for binding, looseness, or excessive play. Binding can cause improper pedal release which may result in brake drag and rapid lining wear. In addition, worn pedal linkage may cause a low pedal condition or frequent need for brake adjustment.

Pedal free play should be 1/16 to 1/4 inch (1.58 to 6.35 mm). Inadequate free play can result in brake drag or grab while excessive free play can produce a low pedal condition. Free play on models with nonpower brakes is governed by pedal push rod length which is preset at manufacture. The push rod is not adjustable on these models and under normal circumstances should not require further attention. Power brake equipped vehicles utilize a single push rod in the power unit which is also preset at manufacture and is not adjustable. When replacing a power unit, use the push rod supplied with the replacement power unit as it has been properly gauged for use with the replacement unit. Pedal free play for power brake equipped vehicles is the same as for vehicles with nonpower brakes.

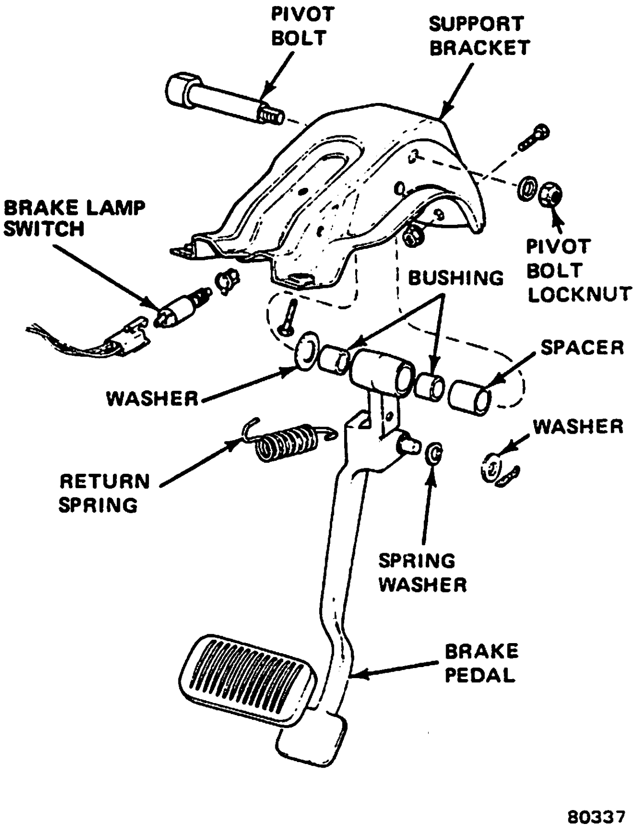

Fig. 2G-2 Brake Pedal—Cherokee-Wagoneer-Truck Models

BRAKE WARNING LAMP

A dual purpose warning lamp is located in the instrument cluster on all Jeep vehicles. The primary function of this lamp is to alert the driver if a pressure differential between front and rear brake hydraulic systems should ever occur.

On vehicles with a parking brake warning system, the lamp also functions as a signal device to alert the driver when the parking brakes are applied.

In the parking brake signal mode, the lamp is activated by a mechanically operated switch mounted on the parking brake lever assembly. In the brake hydraulic pressure differential warning mode, the lamp is activated by a plunger-type switch located in the combination valve.

If a pressure loss should occur in either the front or rear brake hydraulic systems, a pressure differential of 70 to 300 psi (483 to 2 068 kPa) will cause a piston in the pressure differential section of the combination valve to shuttle toward the low pressure side of the valve. As the piston moves toward this side of the valve, ramps on the piston contact the differential switch plunger forcing it upward and closing the switch internal contacts. This completes the electrical circuit between switch and warning lamp causing the lamp to light. Unless the ignition lock cylinder is turned to the Off position, the lamp will remain illuminated until the cause of the pressure differential is corrected.

In normal operation, with the ignition lock cylinder turned to the Start Position, the warning lamp will illuminate and remain so until the engine is started and the lock cylinder is returned to the On position, or when the parking brakes are released. This feature is provided as a means of checking warning lamp bulb and circuit operation.

PARKING BRAKE ADJUSTMENT

NOTE: *The service brakes must be adjusted before adjusting the parking brakes.*

(1) Release parking brakes.

(2) Loosen equalizer locknuts to release tension on cables (figs. 2G-3 and 2G-4).

(3) Inspect all cables for binds, kinks, or frayed condition. Replace damaged cables.

(4) Tighten equalizer locknut until slight drag is produced at wheels.

(5) Loosen equalizer locknut until wheels rotate freely and brake drag is eliminated.

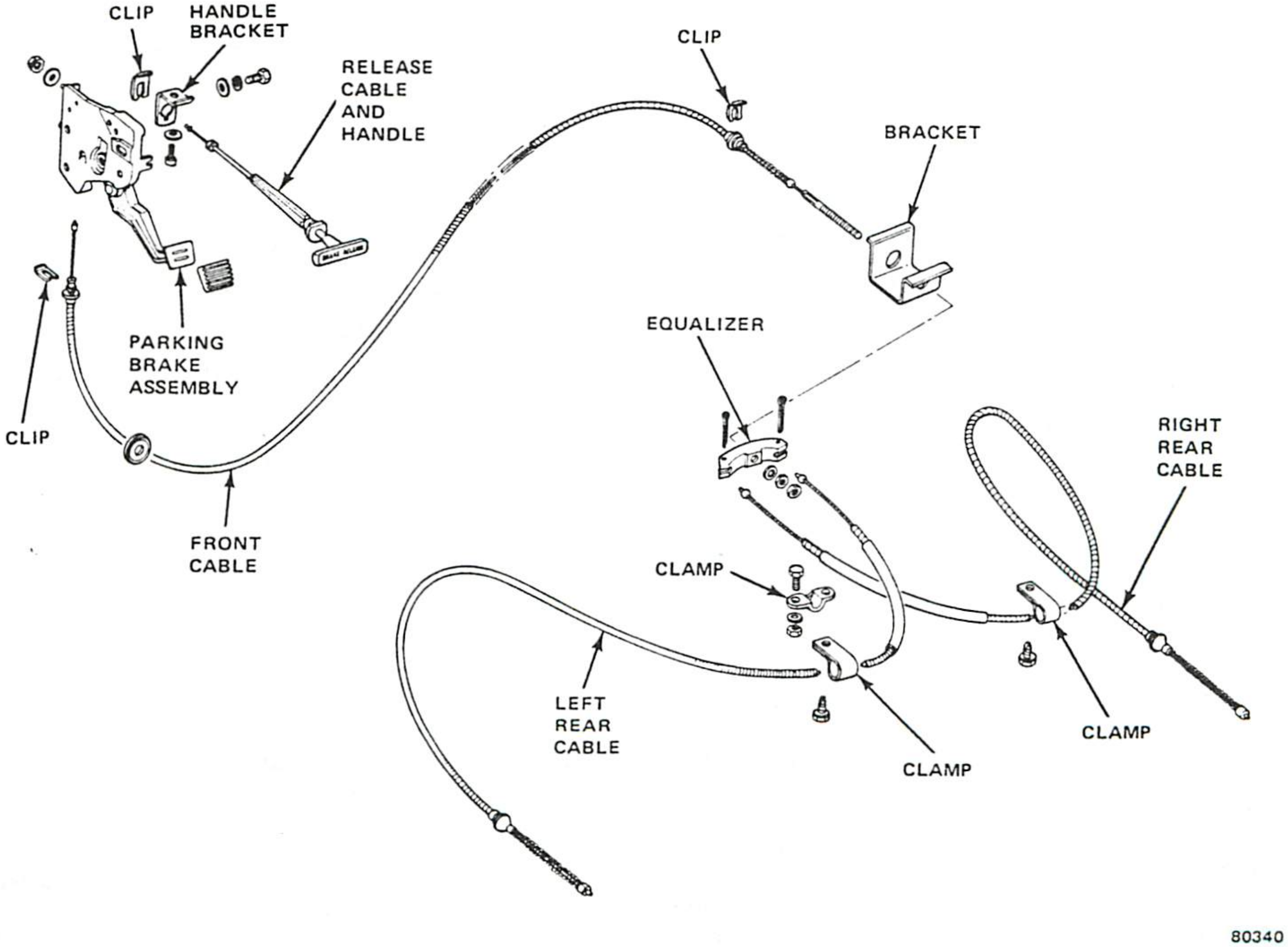

Fig. 2G-3 Parking Brake Assembly—CJ and Scrambler Models

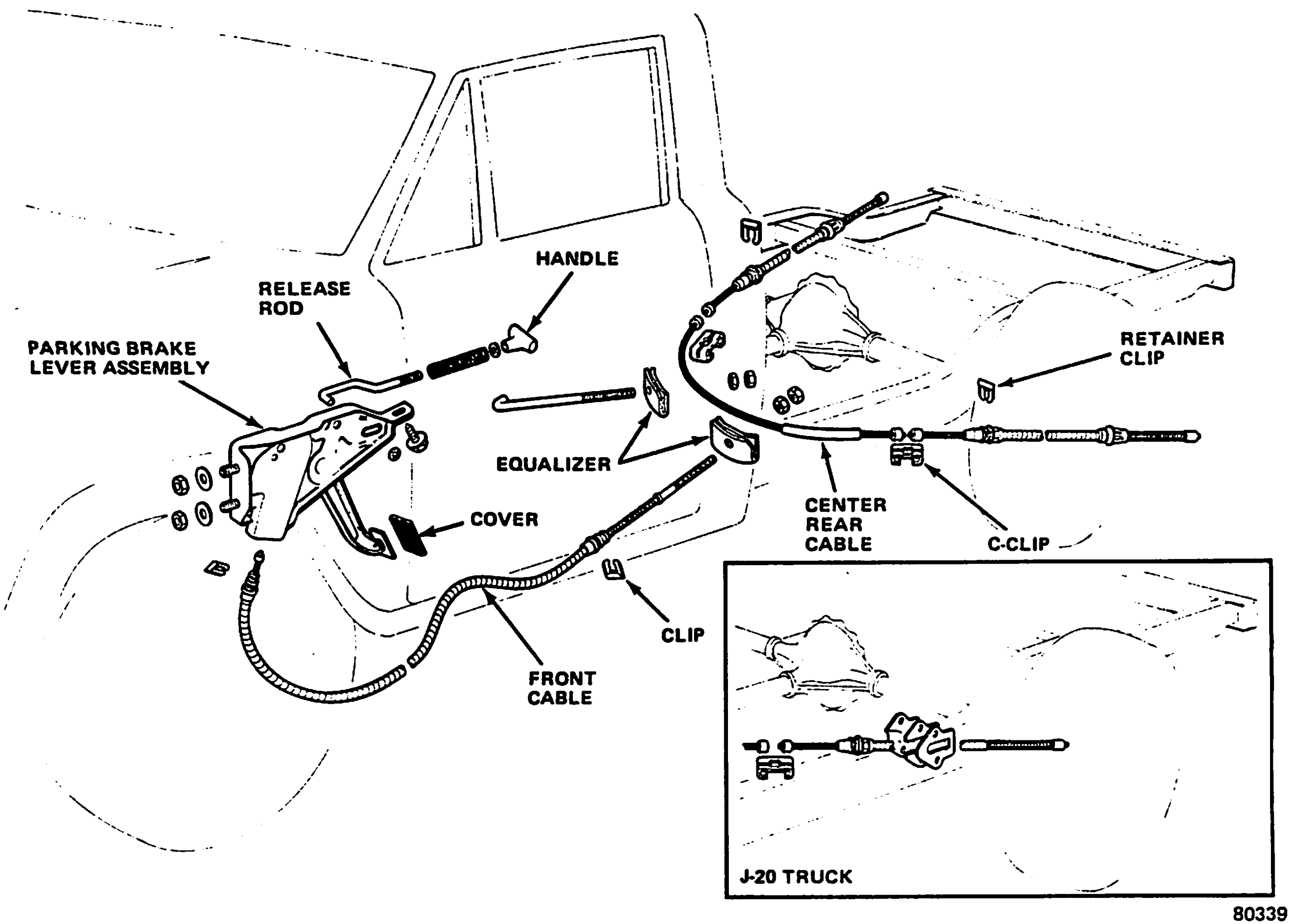

Fig. 2G-4 Parking Brake Assembly—Cherokee-Wagoneer-Truck Models

(6) Tighten equalizer locknuts securely.

(7) Check parking brake operation.

PARKING BRAKE CABLES

Removal—Rear Cable

(1) Raise vehicle.

(2) Loosen cable adjuster locknuts at equalizer (figs. 2G-2 and 2G-3).

(3) On CJ and Scrambler models, remove necessary cable locating clamps, remove cotter pin retaining cable in equalizer, and remove cable end from equalizer (fig. 2G-3).

(4) On Cherokee, Wagoneer and Truck models, disengage cable from connector attached to center cable.

(5) On Cherokee, Wagoneer and Truck models, if left cable is being removed, remove fuel tank skid plate.

(6) Remove clip retaining cable in frame bracket and unhook locating spring from cable (fig. 2G-4).

(7) Disassemble necessary rear drum brake unit as outlined in this chapter.

(8) On all vehicles except those with Model 60 rear axle, compress cable lock tabs at brake support plate using small hose clamp and remove cable. On vehicles with Model 60 rear axle, remove bolts attaching cable mounting bracket to support plate and remove cable.

Installation—Rear Cable

(1) On all vehicles except those with Model 60 rear axle, insert cable in support plate and pull cable through plate until cable lock tabs engage in support plate.

(2) On vehicles with Model 60 rear axle, insert cable end through support plate, position cable mounting bracket on support plate, and install mounting bracket attaching bolts.

(3) Reassemble rear drumbrake unit as outlined in this chapter.

(4) On CJ and Scrambler models, engage cable end in equalizer, install cable retaining cotter pin, and install necessary cable locating clamps.

(5) On Cherokee, Wagoneer and Truck models, engage cable end in center cable connecter.

(6) Insert cable in frame bracket, install cable-to-bracket retainer clip in cable ferrule, and engage cable end in center cable connector.

(7) On Cherokee, Wagoneer and Truck models, install fuel tank skid plate if removed.

(8) Tighten cable adjuster locknuts and adjust parking brakes as outlined in this chapter.

(9) Lower vehicle.

Removal—Front Cable

(1) Raise vehicle.

(2) Remove equalizer from front cable.

(3) On CJ and Scrambler models, remove clip retaining cable to frame bracket.

(4) On Cherokee, Wagoneer and Truck models, remove clip retaining cable to rear crossmember.

(5) Lower vehicle.

(6) Disconnect front cable return spring at parking brake lever assembly if equipped.

(7) Roll carpet back and remove front cable ferrule-to-parking brake lever assembly retaining clip.

(8) Disengage cable end from parking brake lever assembly.

(9) Remove cable.

(10) If cable is to be replaced, remove insulator or grommet from lever end of cable.

Installation—Front Cable

(1) Install front cable through floorpan and install cable grommet or insulator in floorpan.

(2) Install cable ferrule-to-parking brake lever assembly retaining clip and reposition carpet.

(3) Engage cable end in parking brake lever assembly and install cable return spring if equipped.

(4) On CJ and Scrambler models, install clip retaining cable to frame bracket.

(5) On Cherokee, Wagoneer and Truck models, install clip retaining cable to rear crossmember.

(6) Raise vehicle.

(7) Install cable equalizer and locknuts. On CJ and Scrambler models, be sure cable is properly positioned in frame bracket as well as equalizer (fig. 2G-3).

(8) Adjust parking brakes as outlined in this section.

(9) Lower vehicle.

BRAKELAMP SWITCH

The brakelamp switch is mounted on a flange attached to the brake pedal support bracket (fig. 2G-2). A spring-loaded plunger in the switch opens and closes the stoplamp circuit.

When the brake pedal is in the released position, the pedal arm contacts the switch plunger, holding it in the off position. When the brake pedal is pressed, the spring loaded plunger extends with brake pedal movement until the switch is in the On position.

Brakelamp Switch Adjustment

(1) On CJ and Scrambler models with air conditioning, remove screws attaching evaporator housing to instrument panel and move housing away from panel.

(2) Press and hold brake pedal in applied position.

(3) Push brakelamp switch through mounting bracket until it stops against brake pedal bracket.

(4) Release brake pedal to set *switch* in proper position.

(5) Check switch position. Switch plunger should be in ON position and activate brakelamps after 3/8 to 5/8 inch (9.52 to 15.87 mm) brake pedal travel. Measure pedal travel from center of brake pedal pad.

(6) On CJ and Scrambler models with air conditioning, reposition evaporator housing on panel and install housing attaching screws.

SERVICE BRAKE ADJUSTMENT

The rear drum brakes are the only adjustable service brakes on Jeep vehicles. If the rear brakes are disassembled for any reason, an initial adjustment must be performed before installing the drum. In addition, if diagnosis indicates the need, the rear brakes can be adjusted manually as follows:

(1) To perform initial adjustment with drums removed, use Brakeshoe-to-Drum Clearance Gauge J-21107-01 to preset brakelining adjustment (fig. 2G-5).

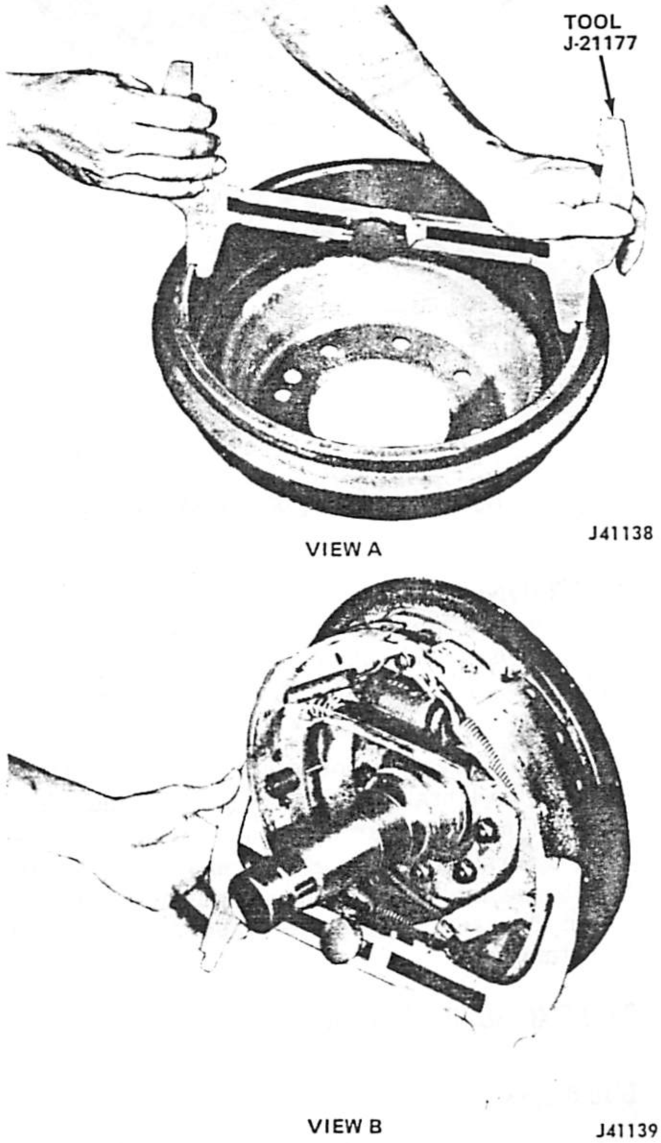

Fig. 2G-5 Presetting Brakeshoe-To-Drum Clearance

Drums should fit over brakelining with slight drag.

(2) To manually adjust rear brakes with drums in place, proceed to next step.

(3) Remove access slot covers from brake support plates.

(4) Rotate adjusting screw in clockwise direction using brake adjusting tool until brakes are locked.

(5) Rotate adjuster screw in counterclockwise direction until wheel rotates freely (fig. 2G-6).

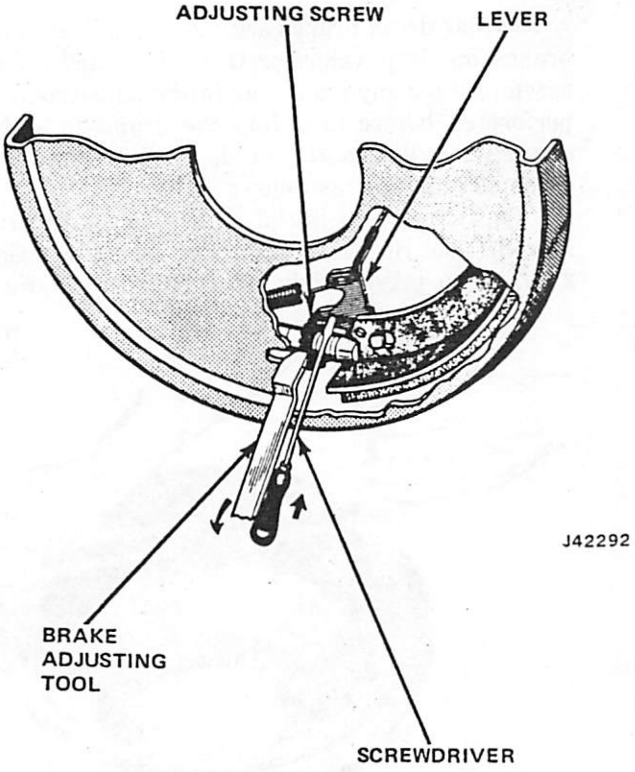

Fig. 2G-6 Adjusting Drum Brakes Manually

CAUTION: *The automatic adjuster lever must be disengaged from the adjuster screw before the screw can be rotated. Use a thin blade screwdriver or section of 1/8 welding rod to unseat the adjuster lever (fig. 2G-6).*

(6) Install access slot cover in brake support plate.

(7) Check brake operation before moving vehicle.

(8) Complete rear brake and pedal travel adjustment by driving vehicle in reverse and making 10 to 15 firm brake applications. Make one forward brake application between each reverse application to equalize adjustment.

BRAKELINING INSPECTION

Disc Brakes

The brakelining should be inspected whenever the wheels are removed for tire rotation or at the intervals specified in the Maintenance Schedule.

It is not necessary to remove the front calipers for brakelining inspection. The outboard lining can be viewed from either end of the caliper and the inboard lining can be viewed through the inspection port in the caliper body (fig. 2G-7). The lining should be replaced when it has worn to the approximate thickness of the metal brakeshoe.

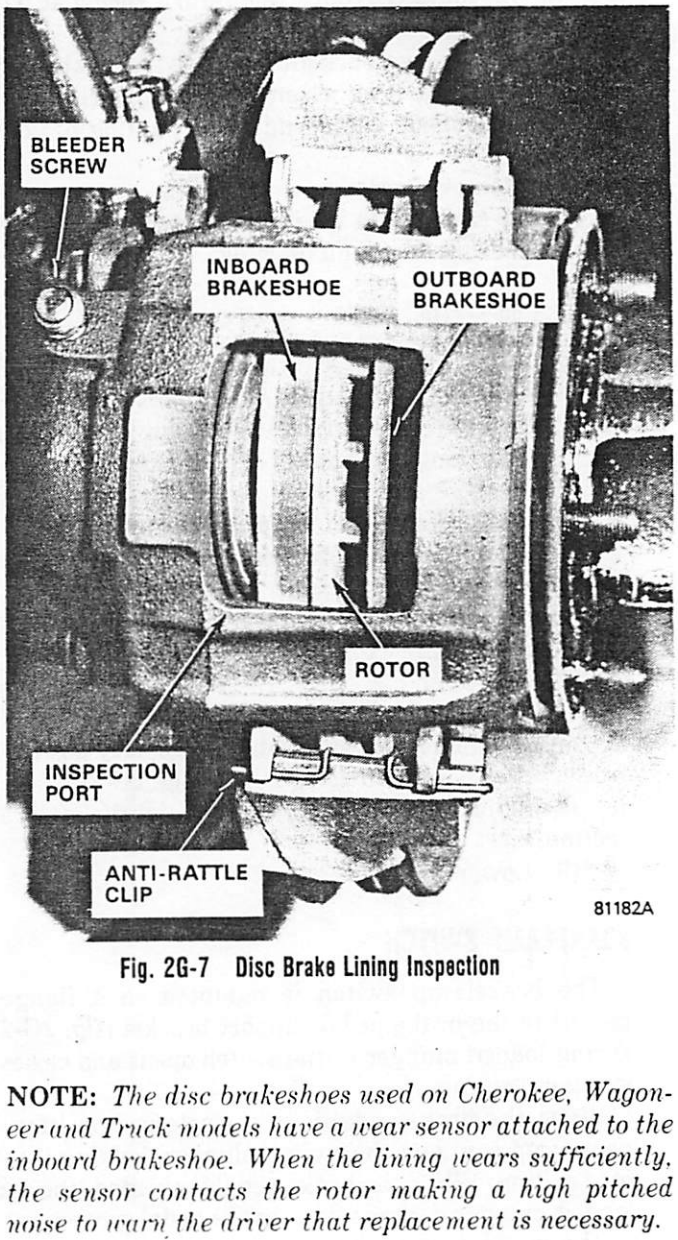

Fig. 2G-7 Disc Brake Lining Inspection

NOTE: *The disc brakeshoes used on Cherokee, Wagoneer and Truck models have a wear sensor attached to the inboard brakeshoe. When the lining wears sufficiently, the sensor contacts the rotor making a high pitched noise to warn the driver that replacement is necessary.*

Drum Brakes

Inspect the rear drum brakelining whenever the rear wheels and drums are removed or at the intervals specified in the Mechanical Maintenance Schedule. Bonded linings should be replaced whenever the lining has worn to a thickness of 1/16 inch (1.58 mm) or less. Riveted linings should be replaced whenever the lining has worn to within 1/32 inch (0.79 mm) of the rivet heads.

BRAKE HYDRAULIC SYSTEM

GENERAL

The brake hydraulic system consists of the dual reservoir master cylinder, combination valve, front disc brake calipers, rear drum brake wheel cylinders, and the connecting brake lines, hoses, and fittings (fig. 2G-8).

The hydraulic system is a closed system and must remain free of contaminants in order to function properly. When servicing the system, prevent the entry of contaminants by capping all lines and ports, and by avoiding the use of cleaning solvents that have a mineral oil base.

CAUTION: *Never use gasoline, kerosene, carbon tetrachloride, paint thinner, alcohol, or any similar fluid containing mineral oil, to clean or lubricate hydraulic system components. These materials will cause swelling, deterioration, and premature aging of rubber parts. Use brake fluid or brake cleaning solvent only.*

To determine if dirt, moisture, or mineral oil base fluids have contaminated the hydraulic fluid, drain off a sample and check for suspended particles, discoloration, or separation of the fluid into distinct layers. Layering indicates the presence of water or mineral oil. If system contamination should occur, drain and flush the entire brake hydraulic system with an approved brake fluid only.

BRAKE FLUID

When refilling or adding brake fluid to the hydraulic system, use Jeep Brake Fluid or equivalent grade marked SAE J1703 or DOT 3 only. Do not use any brake

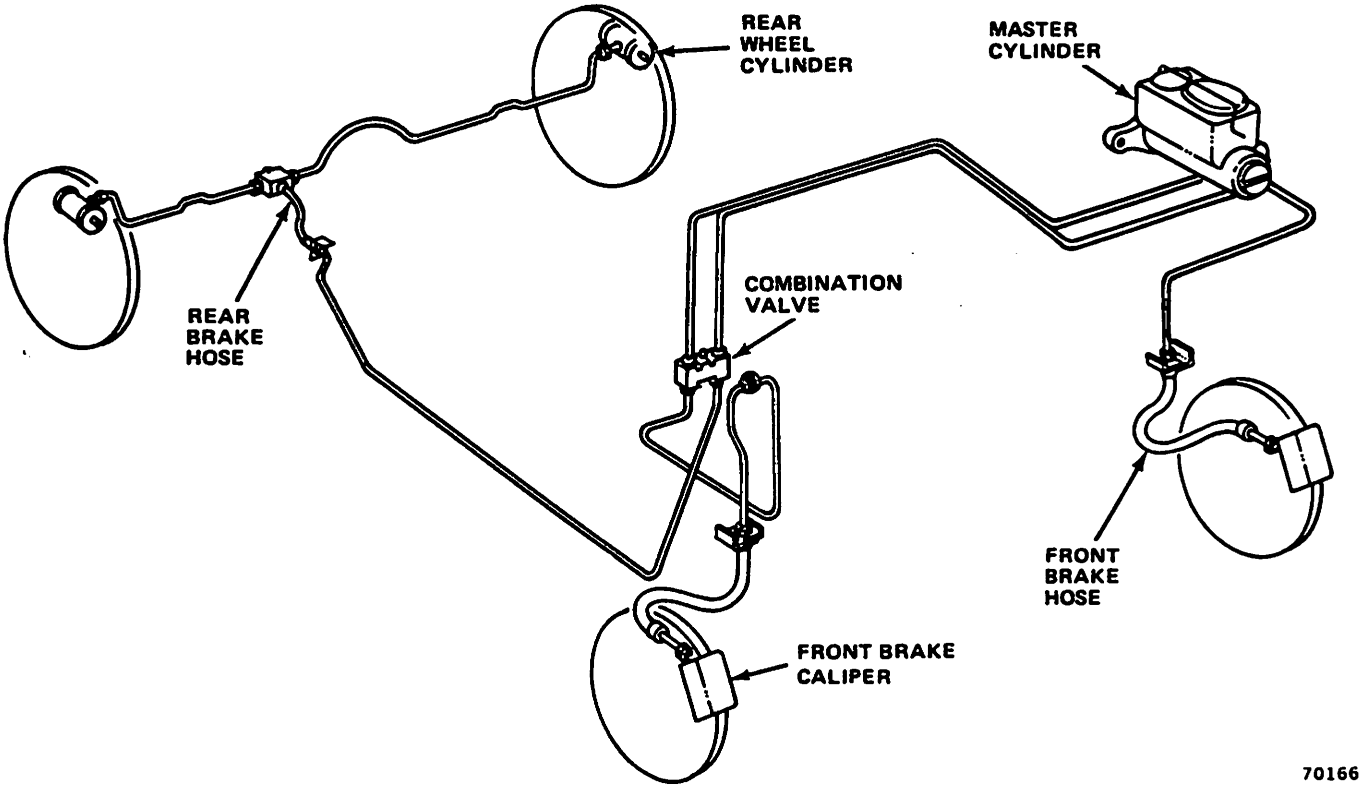

Fig. 2G-8 Brake Hydraulic System—Typical fluid that does not have these grade markings. The use of nonapproved fluids can result in low fluid levels, spongy pedal, fluid aeration, brake fade, and deterioration of brake system components.

CAUTION: *Never refill or add used or reclaimed brake fluid to the hydraulic system.*

BRAKE FLUID LEVEL

The master cylinder fluid level should be checked at least four times a year or every 5,000 miles (8 046 km). Refer to the Maintenance Schedule for details.

When refilling or adding fluid to the system, fill the master cylinder fluid reservoirs to within 1/4 inch (6.35 mm) of each reservoir rim. This is the proper fluid level for all Jeep vehicles.

When checking the fluid level, also inspect the rubber diaphragm seal on the cylinder cover for cracks, cuts, distortion, or any other condition that might allow air or foreign material to enter the master cylinder reservoirs. In addition, when the cover is removed for any reason, do not allow the seal to contact dirt, grease, or other foreign material which could be transferred to the fluid reservoirs.

HYDRAULIC SYSTEM INSPECTION

(1) Clean master cylinder and cylinder cover thoroughly before checking fluid level.

(2) Check master cylinder cover retaining spring for proper tension and fit. Spring should provide enough tension on cover to maintain airtight seal.

(3) Remove cylinder cover and inspect cover and rubber diaphragm seal for cracks and distortion.

(4) Check master cylinder fill level.

(5) Check for dirt and foreign material in reservoirs. If fluid contamination is suspected, drain fluid sample into clean glass container and test for contamination as evidenced by fluid layering.

(6) Inspect all fittings and brake lines for leakage, kinks, or other damage.

(7) Inspect condition of front brake hoses. Replace hoses if cut, cracked, swollen, or leaking.

(8) Check for evidence of fluid leakage at rear wheel cylinders and front calipers. Repair as necessary.

MASTER CYLINDER

A dual reservoir master cylinder is used on all Jeep vehicles. The hydraulic system for the front brakes is completely separate from the rear brakes. In the event of hydraulic brake failure in the front system, the rear hydraulic brakes will still operate. If a failure occurs in the rear brakes, the front brakes will still operate.

The dual master cylinder has two outlet ports, two fluid reservoirs, and two hydraulic pistons which are operated in tandem by a single push rod.

When the master cylinder fluid reservoirs are filled and the front and rear brake systems purged of air, there is a solid column of fluid on the forward side of both the primary and secondary pistons.

During brake application, fluid is displaced by the master cylinder pistons into the front caliper and rear wheel cylinders to activate the brakes. At brake release, fluid returns from the calipers and wheel cylinders to the master cylinder reservoirs.

Cherokee, Wagoneer and Truck models are equipped with a master cylinder designed to be compatible with the low drag disc brake calipers now used on these vehicles. This unit incorporates a quick take-up feature which means the master cylinder delivers a large volume of brake fluid (at low pressure) to the wheel brakes upon initial brake application. This fluid quickly displaces the retracted caliper and rear wheel cylinder pistons which position the brake linings in contact with the brake rotors and drums.

Master Cylinder Service—All Models

Removal

(1) Disconnect brake lines at master cylinder. Cap or tape outlet ports in master cylinder and open ends of brake lines to prevent entry of dirt.

(2) On models with nonpower brakes, disconnect master cylinder push rod at brake pedal.

(3) Remove bolts or nuts attaching master cylinder to dash panel or power unit and remove master cylinder.

Disassembly

(1) Remove cover and diaphragm seal and drain fluid from master cylinder. Mount master cylinder in vise.

NOTE: *On Cherokee, Wagoneer and Truck models:*
A. Remove reservoir using pry bar (fig. 2G-9).
B. Remove reservoir grommets.

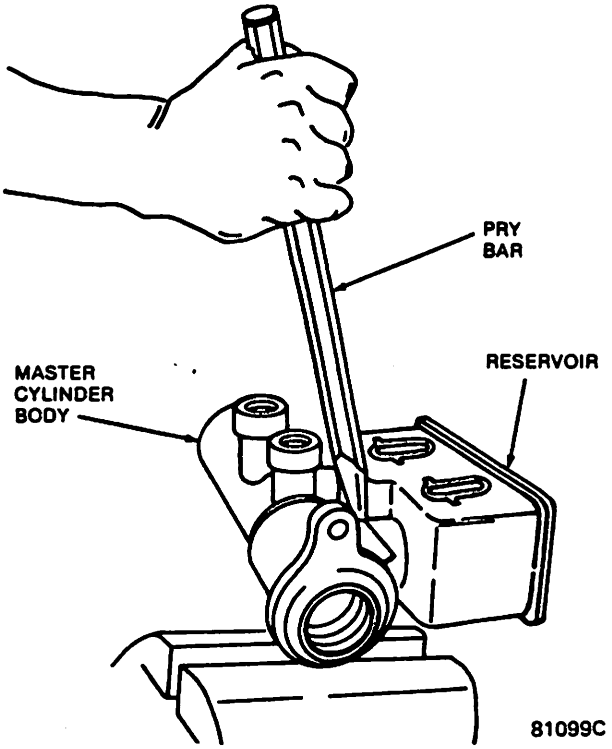

Fig. 2G-9 Removing Master Cylinder Reservoir—Cherokee-Wagoneer-Truck Models

(2) On models with nonpower brakes, remove boot (figs. 2G-10 and 2G-11).

(3) Push primary piston inward using wood dowel or push rod and remove snap ring from groove in master cylinder bore.

(4) Remove primary and secondary piston assemblies from cylinder bore. Air pressure applied through compensator port in front reservoir will aid in removal of secondary piston assembly.

(5) Remove piston seal and piston cups from secondary piston only. It is not necessary to disassemble primary piston as piston is supplied as complete assembly in repair kit.

(6) Clean and inspect master cylinder. Replace unit if bore is severely scored, corroded, or pitted, or if body is cracked, porous, or has sustained other damage. Check compensator and bypass ports in reservoirs. If plugged or dirty, open them using brake cleaning solvent and air pressure only. Never use wire to open ports as wire may create burr in port and push burr into cylinder bore.

CAUTION: *Clean the master cylinder with brake fluid or an approved brake cleaning solvent only. Never use solvents containing mineral oil such as gasoline, kerosene, alcohol, or carbon tetrachloride. Mineral oil is very harmful to the rubber piston cups and seals.*

(7) Inspect tube seats in outlet ports. Replace seats only if cracked, scored, cocked in bore, or loose. If replacement is necessary, remove seats as follows:

(a) On Cherokee, Wagoneer and Truck models, thread 6-32 x 5/8 self-tapping screw into tube seat. Pry upward on screw using two screwdrivers to remove seat. Remove chips using brake cleaning solvent.

(b) On CJ and Scrambler models, enlarge hole in tube seats using 13/64 drill. Place flat washer on each outlet port and thread 1/4-20 x 3/4 screw into seat. Tighten screw until seat is loosened. Remove seat, screw, and washer. Remove chips using brake cleaning solvent and compressed air.

Assembly

(1) Install replacement tube seats *(if removed)* using spare tube fitting nuts to press seats into place. Do not allow seats to become cocked during installation. Be sure seats are bottomed. Remove tube fitting nuts and check for burrs or chips. Remove burrs or chips. Rinse master cylinder in brake cleaning solvent and blow out all passages with compressed air.

(2) Install piston cups on secondary piston. Piston cup installed in groove at end of piston should have lip facing away from piston. Install next cup so lip faces piston (figs. 2G-10 and 2G-11).

(3) Install seal protector, piston seal, spring retainer, and return spring on secondary piston (figs. 2G-10 and 2G-11). Install piston seal so lip faces interior of master cylinder bore when assembly is installed. Be sure return spring seats against retainer and that retainer is located inside lip of piston seal.

(4) Lubricate master cylinder bore and secondary piston seal and cups with clean brake fluid and install secondary piston assembly in cylinder bore.

(5) Lubricate seals on primary piston assembly with clean brake fluid and install assembly in master cylinder bore.

(6) On Cherokee, Wagoneer, and Truck models:

(a) Press primary piston inward using wood dowel and install snap ring in groove of master cylinder bore.

(b) Install new reservoir grommets in master cylinder body. Be sure grommets are properly seated.

(c) Lay reservoir on flat, hard surface (fig. 2G-12). Press master cylinder onto reservoir using rocking motion.

(7) On CJ and Scrambler models with manual brakes, press primary piston inward using push rod and install snap ring in groove of master cylinder bore.

(8) On models with nonpower brakes, install boot.

(9) Install replacement diaphragm seal on master cylinder cover.

(10) Remove master cylinder from vise.

Installation

(1) Position master cylinder on dash panel or power unit and install attaching nuts and washers. Tighten nuts to 30 foot-pounds (41 N•m) torque.

(2) Connect brake lines to master cylinder.

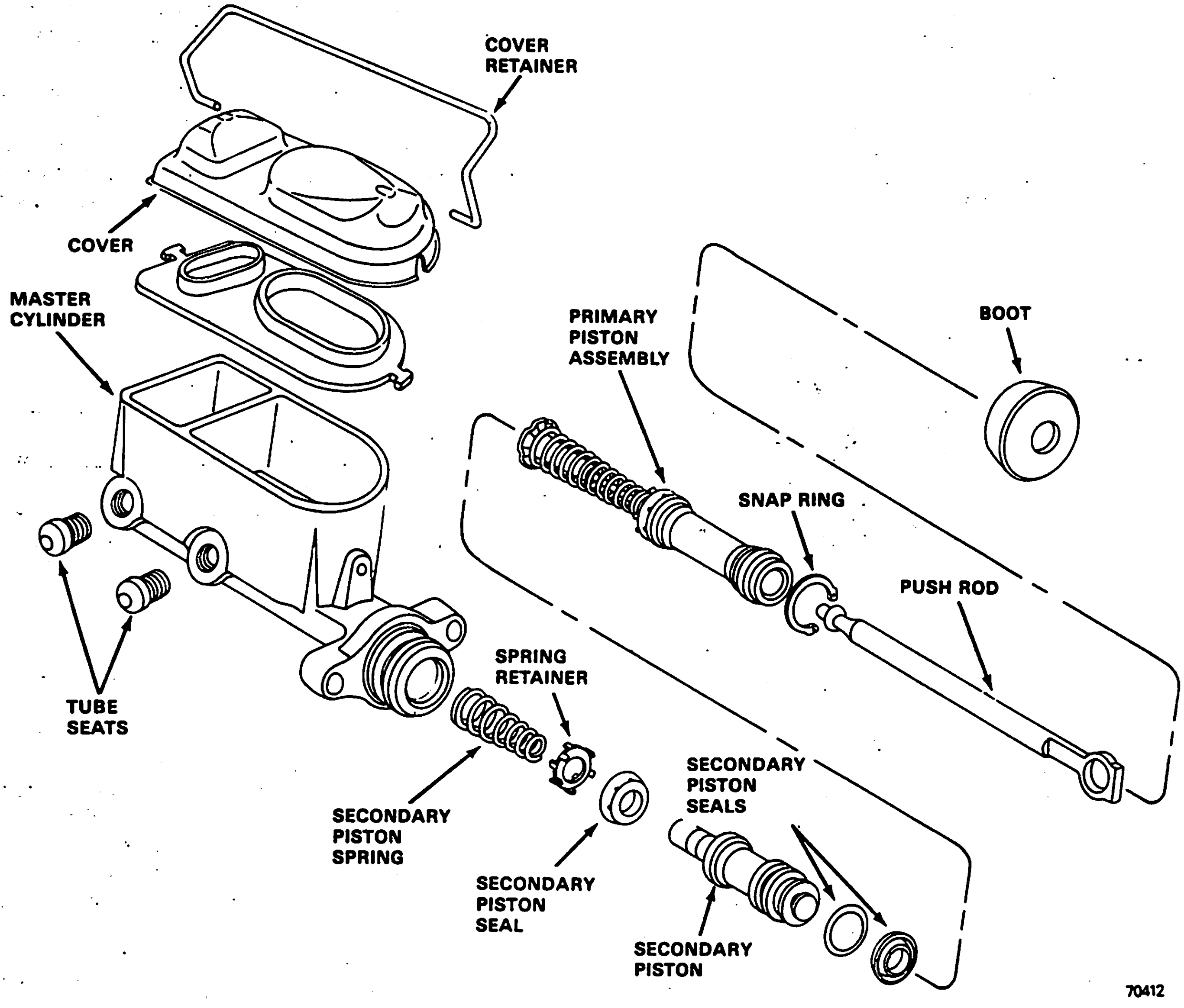

Fig. 2G-10 Master Cylinder—CJ and Scrambler Models

(3) Fill master cylinder reservoirs to within 1/4 inch (6.35 mm) of rim with Jeep Brake Fluid or equivalent grade marked SAE J-1703 or DOT 3.

(4) Install cover and diaphragm seal.

(5) On models with nonpower brakes, connect push rod to brake pedal.

(6) Bleed entire brake system as outlined under Brake Bleeding.

WHEEL CYLINDER

The rear drum brake wheel cylinder consists of a cast iron housing with a piston bore machined in it. Two opposed pistons, rubber piston cups, and a compression spring with integral cup expanders are contained within the piston bore (fig. 2G-13). Rubber dust boots are installed at each end of the cylinder to prevent entry of dirt and water. Each cylinder is equipped with a bleeder screw to facilitate brake bleeding.

The compression spring is used to hold the piston cups tightly against the pistons and the integral cup expanders hold the piston cups tightly against the walls of the piston bore. The expanders prevent air from being drawn past the cups and into the hydraulic system when the brakes are released.

Removal

(1) Remove wheels, brakedrums, and brakeshoes. Refer to Drum Brake Section for procedure.

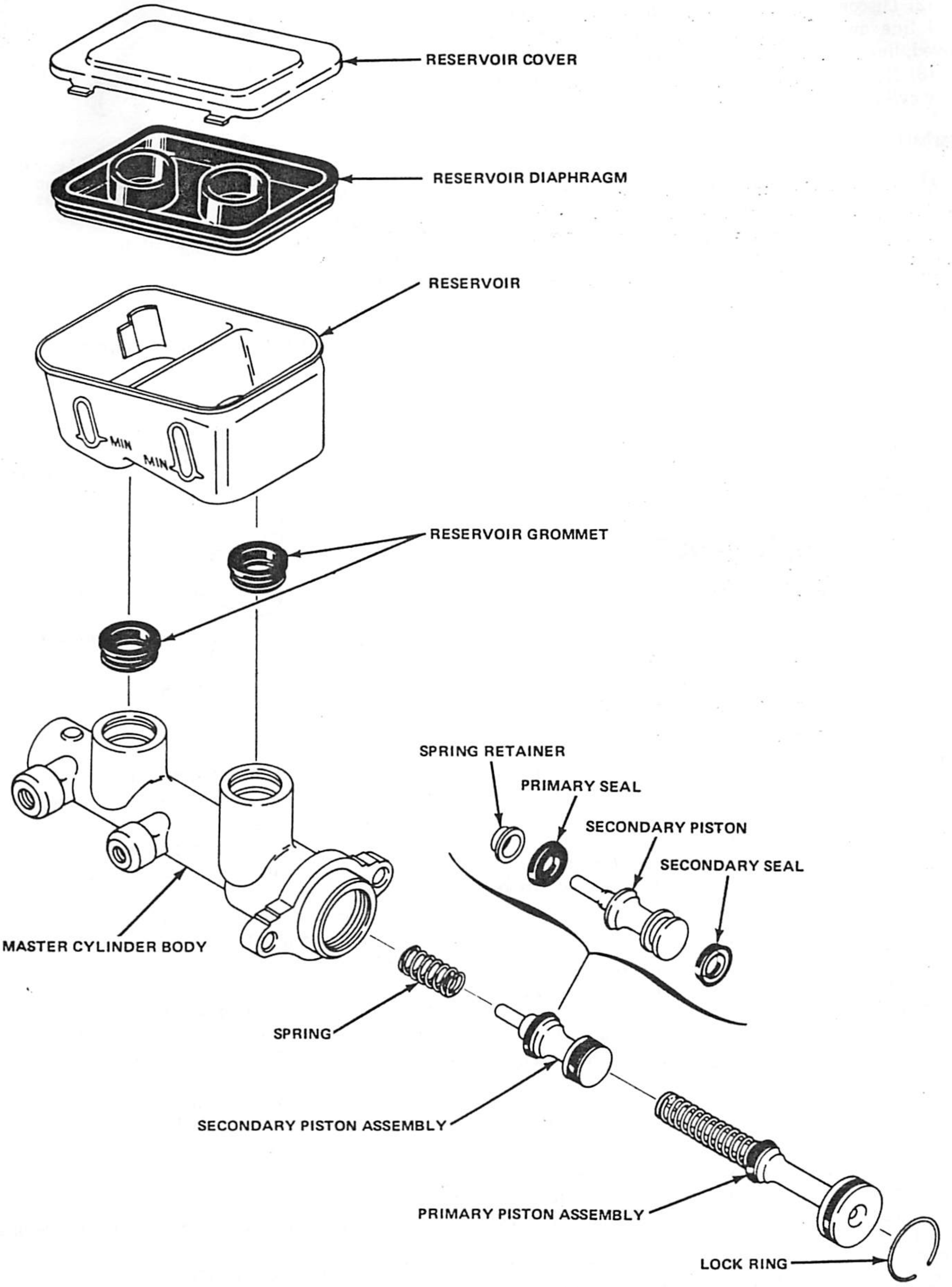

Fig. 2G-11 Master Cylinder—Cherokee-Wagoneer-Truck Models

81099B

(2) Disconnect brake line at wheel cylinder. Do not bend line away from cylinder. When cylinder is removed, line will separate from cylinder easily.

(3) Remove cylinder-to-support plate bolts and remove cylinder.

Overhaul

(1) Remove brakeshoe links and dust boots.

(2) Push pistons, piston cups, and compression spring and expanders out of piston bore. Discard piston cups, they are not reusable.

(3) Clean all cylinder components using brake cleaning solvent or brake fluid only.

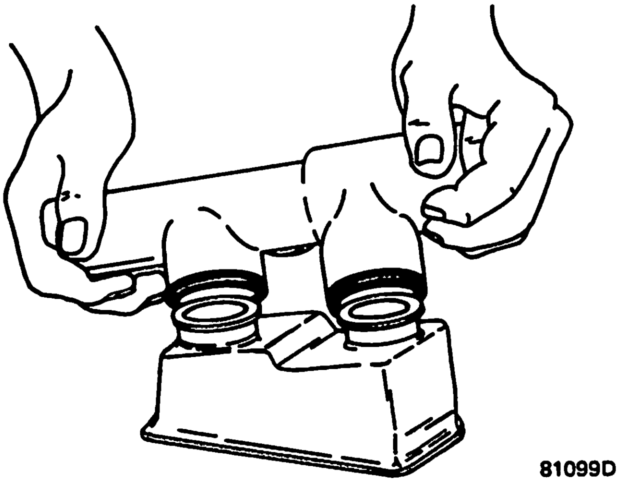

Fig. 2G-12 Installing Master Cylinder Reservoir—Cherokee-Wagoneer-Truck Models

CAUTION: *Do not clean brake parts with solvents containing mineral oil such as gasoline, carbon tetrachloride, kerosene, alcohol, paint thinner or similar fluids. Mineral oil causes swelling, deterioration, and premature aging of all rubber parts in the hydraulic system. Use clean brake fluid or an approved brake cleaning solvent only.*

(4) Inspect wheel cylinder and pistons. Replace cylinder if bore or pistons are scored, corroded, rusted, pitted, worn, or cracked. If bore or pistons are only discolored, or stained, polish bore or pistons lightly using crocus cloth only. Do not polish cylinder bore in lengthwise direction, polish by rotating cylinder around crocus cloth supported on fingers.

CAUTION: *Do not hone the wheel cylinders at any time or for any reason.*

(5) Inspect bleeder screw and screw threads in cylinder. Screw must turn freely. Replace screw if damaged or replace cylinder if cylinder threads are damaged.

(6) Inspect compression spring and integral expanders. Replace spring if broken, distorted, lacks tension, or if expanders are damaged in any way.

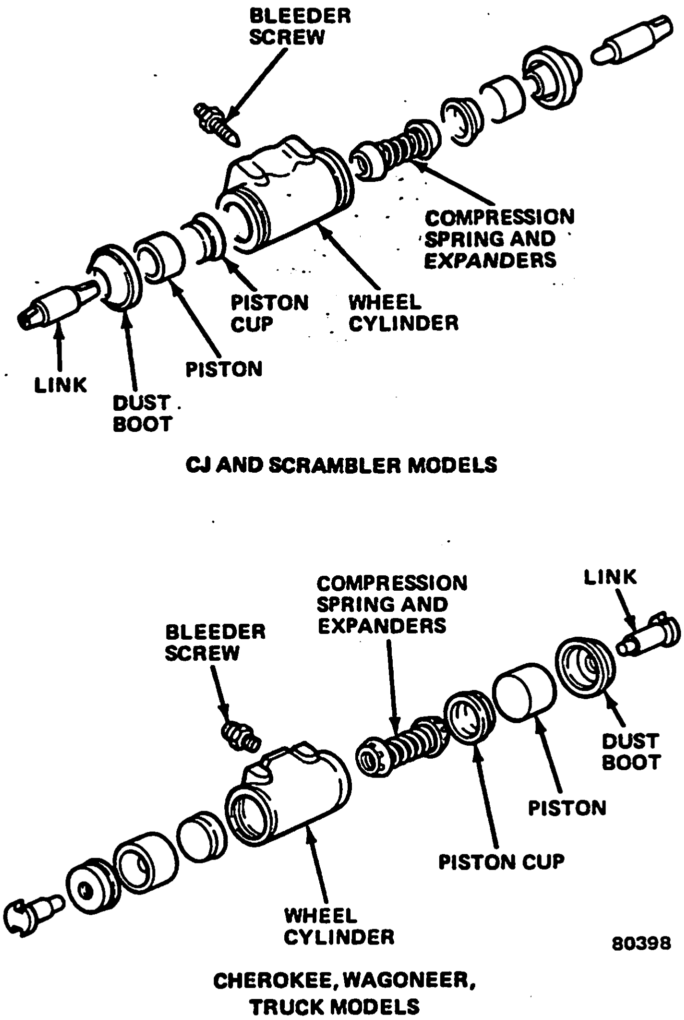

Fig. 2G-13 Wheel Cylinder

(7) Inspect rubber dust boots. Replace boots if cut, torn, cracked, distorted.

(8) If cylinder bore or pistons were polished, clean them using brake fluid or brake cleaning solvent and dry using compressed air.

(9) Lubricate cylinder bore and all cylinder internal components with new brake fluid. Do not lubricate dust boots. Install them dry only.

(10) Position replacement piston cups on compression expanders and install assembled parts in cylinder bore. Be sure expanders are seated in piston cups and that cups are installed with lips facing one another and toward interior of cylinder bore.

(11) Install pistons in cylinder bore. Be sure pistons are installed with flat sides facing interior of bore.

(12) Install dust boots.

Installation

(1) Clean wheel cylinder mounting surface of support plate.

(2) Clean brake line fitting and threads.

(3) Start brake line fitting into cylinder. Do not tighten fitting completely.

(4) Position cylinder on support plate and install cylinder mounting bolts. Tighten bolts to 18 foot-pounds (24 N•m) torque.

(5) Insert brakeshoe connecting links through dust boots and into pistons.

(6) Install Wheel Cylinder Clamp Tool J-8002 over cylinder to retain internal components in cylinder.

(7) Tighten wheel cylinder brake line fitting.

COMBINATION VALVE

A three-function combination valve is used on all Jeep models. The valve consists of a one-piece housing containing a front brake metering valve, a pressure differential warning valve, and a rear brake proportioning valve. The combination valve also serves as the junction block for the front brakes.

Two different combination valves are used. Some models may be equipped with the type-W valve (fig. 2G-14), while other models may be equipped with the type-D valve (fig. 2G-15). Although the two valve types differ in external appearance and in internal component design, valve function and operation is the same for both.

Combination valve location is the same for all models. The valve is mounted on the inner side of the left frame rail adjacent to the transmission (fig. 2G-16).

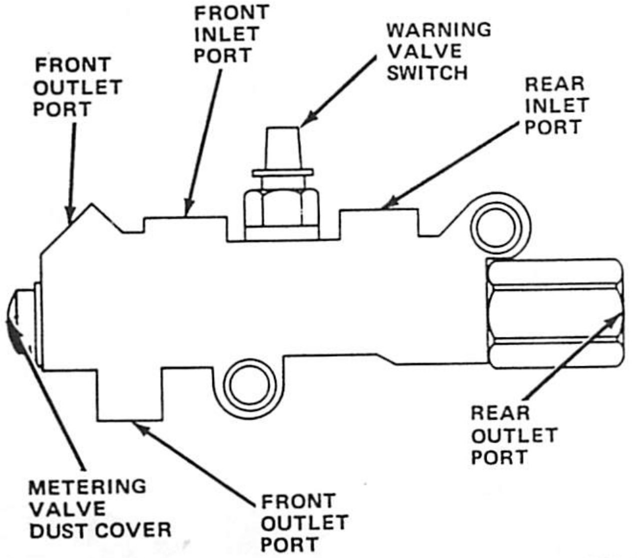

Fig. 2G-14 Type-W Combination Valve

Combination Valve Operation

The front brake metering valve assists in providing balanced front-to-rear braking. To accomplish this, the metering valve holds off (delays) full hydraulic fluid pressure to the front disc brakes until the rear drum brakes overcome return spring tension and the linings contact the drums.

When the brakes are not applied, the metering valve permits the free flow of brake fluid. This feature allows the fluid to expand and contract with changes in temperature.

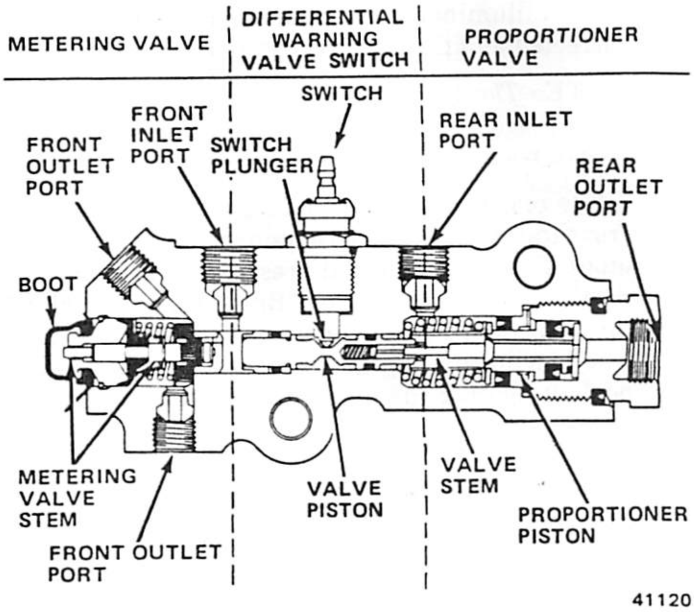

Fig. 2G-15 Type-D Combination Valve

When bleeding the front disc brakes, the metering valve stem must be held out using Tool J-26869 on type-W valves or Tool J-23709 on type-D valves. Refer to Brake Bleeding for specific details regarding tool use.

The pressure differential warning valve activates the brake warning lamp if a pressure loss in the front or rear hydraulic system should ever occur. This feature is provided as a method for alerting the driver if such a system malfunction ever occurs.

The valve consists of a valve piston, and plunger-type switch. If a pressure loss in either system occurs, a pressure differential of 70 to 300 psi (483 to 2 068 kPa) will cause the piston to shuttle toward the low pressure side of the valve. As the piston moves, ramps on the piston force the switch contact plunger upward closing the switch contacts. This action completes the electrical circuit between the switch and brake warning lamp causing the light to illuminate. Unless the lock cylinder is turned to the Off position, the warning light will

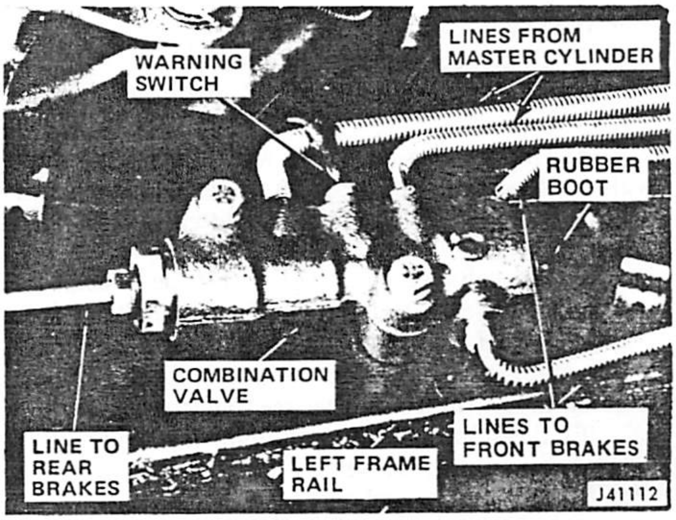

Fig. 2G-16 Combination Valve Location (Type-D Valve Shown) remain illuminated until the cause of the malfunction is corrected and the valve recentered.

NOTE: *The type D and W combination valves are hydraulic self-reset types which do not require manual recentering.*

The rear brake proportioning valve provides balanced front-to-rear braking action during high pedal pressure stops. During light pedal pressure application, the proportioner does not operate. Brake fluid normally flows through the proportioner valve and into the rear brake wheel cylinders. Spring pressure on the valve piston holds it against the piston stop plate for normal brake pressures.

Combination Valve Service

The combination valve is not repairable. If any section of the valve is found defective, the entire valve assembly must be replaced.

BRAKE BLEEDING

General

The brake hydraulic system must be purged of air whenever a line has been disconnected or if air has entered the system.

In most cases, it will be necessary to bleed only that portion of the hydraulic system (front or rear) being serviced. However, if a firm brake pedal cannot be obtained, or if diagnosis indicates the need, the entire system must be bled.

Brake bleeding can be performed manually or with pressure equipment. Bleeder screws are provided at the calipers and wheel cylinders to simplify the bleeding procedure.

Manual Bleeding Procedure

(1) Remove all accumulated dirt from master cylinder and cover.

(2) Remove master cylinder cover.

(3) Fill master cylinder if required and install cover.

(4) On vehicles equipped with type-W combination valve, remove dust cover from metering valve stem and install Tool J-26869 on stem to hold valve open (fig. 2G-17).

(5) On vehicles equipped with type-D combination valve, loosen valve front mounting bolt and insert slotted end of Tool J-23709 under bolt. Push metering valve stem inward (using tool) to hold valve open and tighten mounting bolt to secure tool (fig. 2G-18).

(6) Bleed brake system in following sequence:

(a) right rear wheel
(b) left rear wheel
(c) right front wheel
(d) left front wheel
(e) master cylinder brake line connections

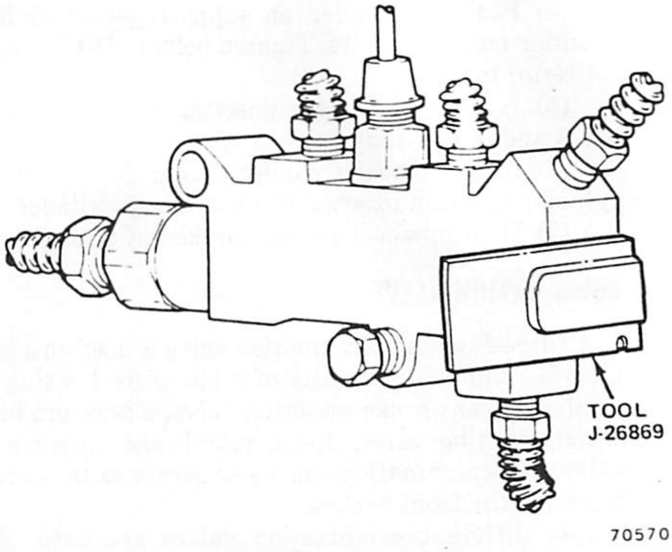

Fig. 2G-17 Metering Valve Tool Installation—Type-W Combination Valve

NOTE: *Correct bleeding procedure is as follows: Place wrench on bleeder screw. Install rubber hose on screw with free end of hose* **submerged** *in a transparent container partially filled with clean brake fluid. Open bleeder screw 3/4 turn. Have helper depress brake pedal. Close bleeder screw before pedal reaches end of travel. Have helper pump up pedal each time bleeder screw is closed to ensure a good surge of fluid when the screw is reopened. Repeat bleeding process until fluid comes out in a solid stream without the presence of air bubbles.*

CAUTION: *Do not allow the supply of fluid in the master cylinder to become exhausted. Check the fluid level frequently while bleeding and refill as required. Do not bleed two wheels at a time and do not bleed the system with the front calipers or rear drums not in place.*

Fig. 2G-18 Metering Valve Tool Installation—Type-D Combination Valve

(7) Remove master cylinder cover and refill as required. Fill reservoir to within 1/4 inch (6.35 mm) of reservoir rim. Install cover. Make sure cover retainer is in place.

(8) Remove metering valve tool.

(9) Test brake operation before moving vehicle.

Pressure Bleeding Procedure

(1) Remove all accumulated dirt from master cylinder and cover.

(2) Remove cover and rubber diaphragm seal. Place cover on work bench or on lint-free cloth. Do not allow diaphragm seal to contact dirt or foreign material.

(3) Fill master cylinder if required.

(4) Install brake bleeder adapter cover on master cylinder (figs. 2G-19 and 2G-20).

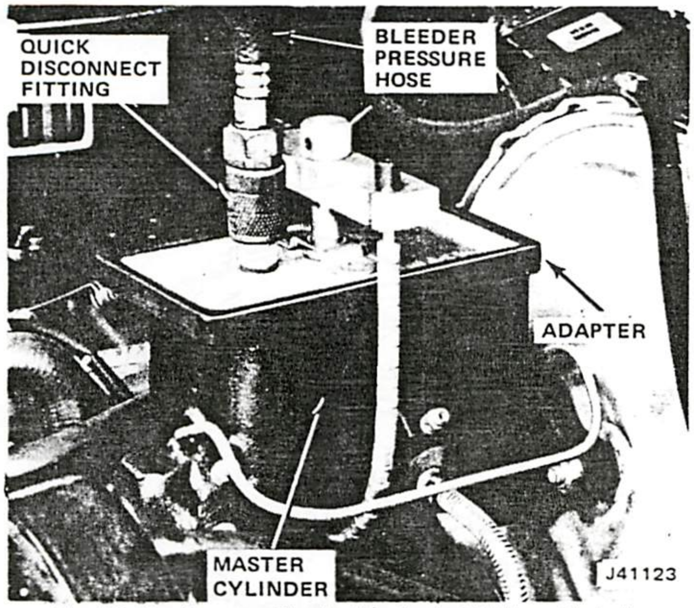

Fig. 2G-19 Pressure Bleeder Adapter Installation—Typical

(5) Connect hose from pressure bleeder to fitting on adapter and open pressure bleeder release valve.

(6) On vehicles with type-W combination valve, remove dust cover from metering valve stem and install Tool J-26869 on stem to hold valve open (fig. 2G-17).

(7) On vehicles equipped with type-D combination valve, loosen valve front mounting bolt and insert slotted end of Tool J-23709 under bolt. Push metering valve stem inward (using tool) to hold valve open and tighten mounting bolt to secure tool (fig. 2G-18).

(8) Bleed brake system in following sequence:

(a) right rear wheel

(b) left rear wheel

(c) right front wheel

(d) left front wheel

(e) master cylinder brake line connections

NOTE: *When using pressure equipment, the bleeding procedure is the same as outlined in the Manual Bleeding Procedure except that a helper is not required to apply the brake pedal. The pressure bleeder develops enough system pressure to permit bleeding without the use of the brake pedal.*

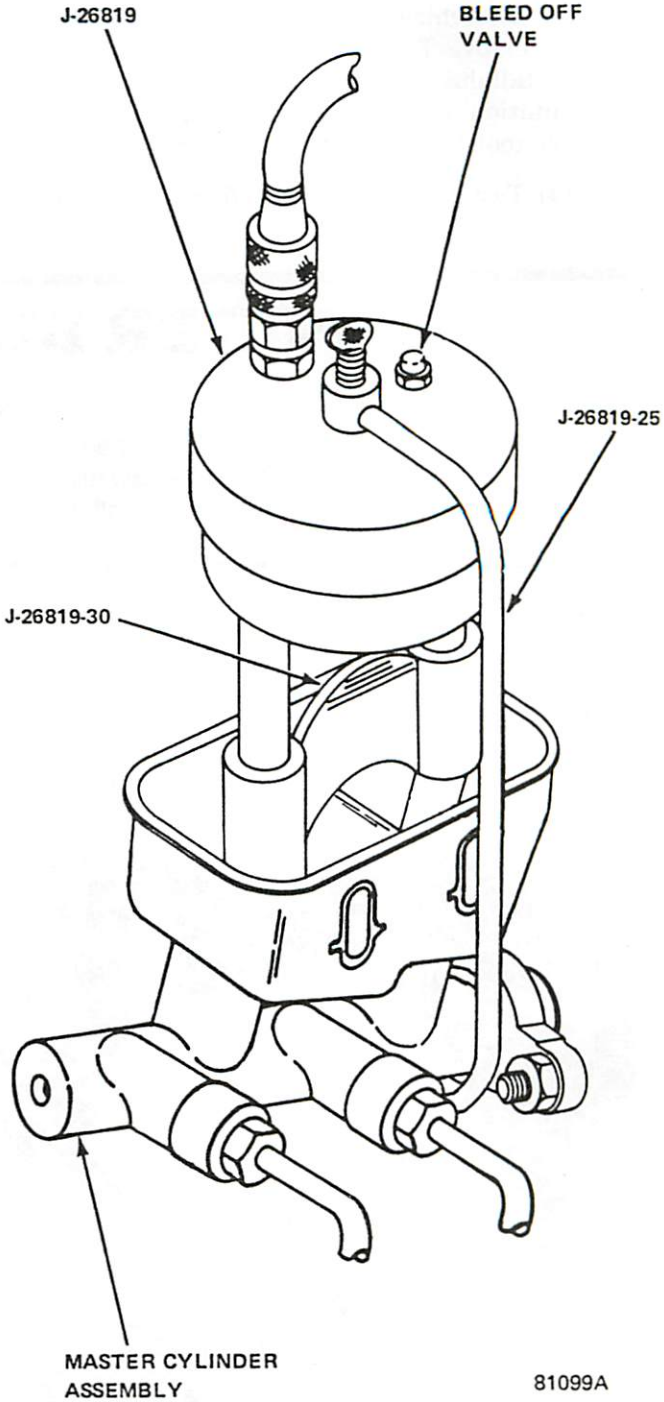

Fig. 2G-20 Pressure Bleeder Adapter Installation—Cherokee-Wagoneer-Truck Models

(9) When system has been purged of all air, turnoff pressure bleeder and close bleeder fluid release valve.

(10) Disconnect pressure bleeder hose at adapter fitting and remove master cylinder cover adapter.

(11) Refill master cylinder reservoirs to within 1/4 inch (6.35 mm) of reservoir rims.

(12) Install cover and rubber diaphragm seal. Make sure cover retainer is in place.

(13) On vehicles equipped with type-W combination valve, remove Tool J-26869 from metering valve stem and install dust cover. On vehicles equipped with type-D combination valve, loosen valve front mounting bolt, remove tool J-23709, and retighten mounting bolt.

(14) Test brake operation before moving vehicle.

SPECIFICATIONS

General Specifications

Brake Fluid	Use Jeep brake fluid or equivalent marked DOT 3 or SAE-J-1703 only.
Brake Fluid Level	Fill master cylinder reservoirs to within 1/4 inch (6.35 mm) of reservoir rims.

80391

POWER BRAKE UNITS

GENERAL

Three power units are used on Jeep vehicles. An 8-inch single diaphragm unit is used on CJ and Scrambler models (fig. 2G-21). A 9-1/2 single diaphragm unit is used on Cherokee, Wagoneer and J-10 Truck models (fig. 2G-22) and a 9-1/2 tandem diaphragm unit is used on J-20 Truck models.

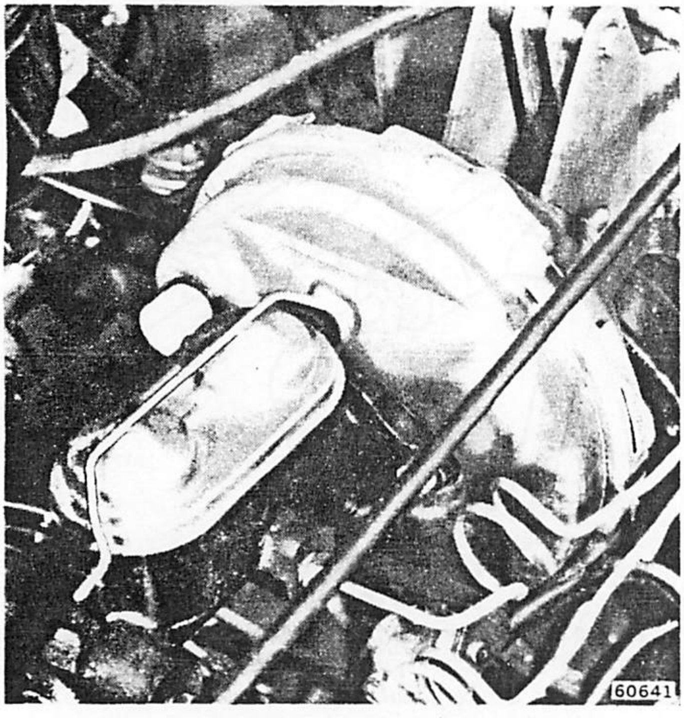

Fig. 2G-21 Power Brake Unit and Bellcrank—CJ and Scrambler Models

The power units consist of a two-piece outer shell containing the single or dual diaphragms, air inlet valve, air filter, control valve, power piston, reaction plate and master cylinder push rod, and vacuum check valve (figs. 2G-23 and 2G-24).

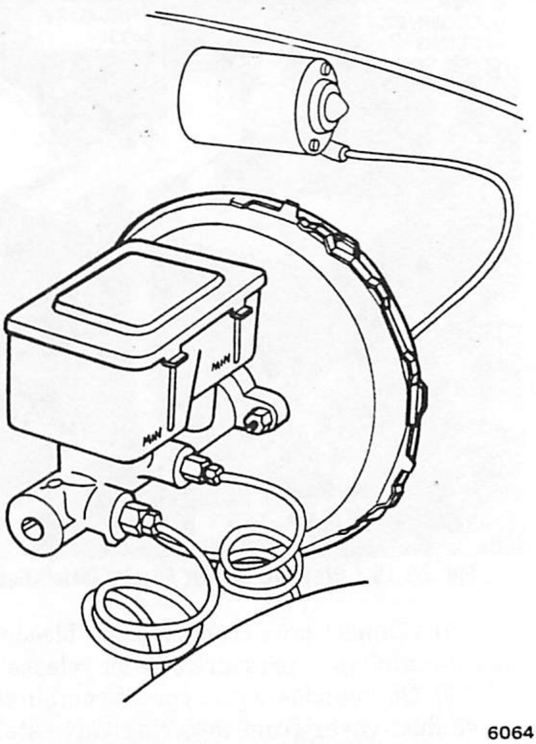

Fig. 2G-22 Power Brake Unit—Cherokee-Wagoneer-Truck Models

Power Unit Operation

The power unit utilizes a combination of engine vacuum and atmospheric pressure to increase brake apply force without increasing brake pedal efforts.

In the neutral (nonapplied) position, a vacuum is present within the chamber formed by the two halves of the outer shell and on both sides of the power piston and diaphragm.

As the brake pedal is pressed, the brake pedal push rod moves the air inlet valve away from the control valve (figs. 2G-23 and 2G-24). The control valve then follows the air inlet valve until the control valve con-

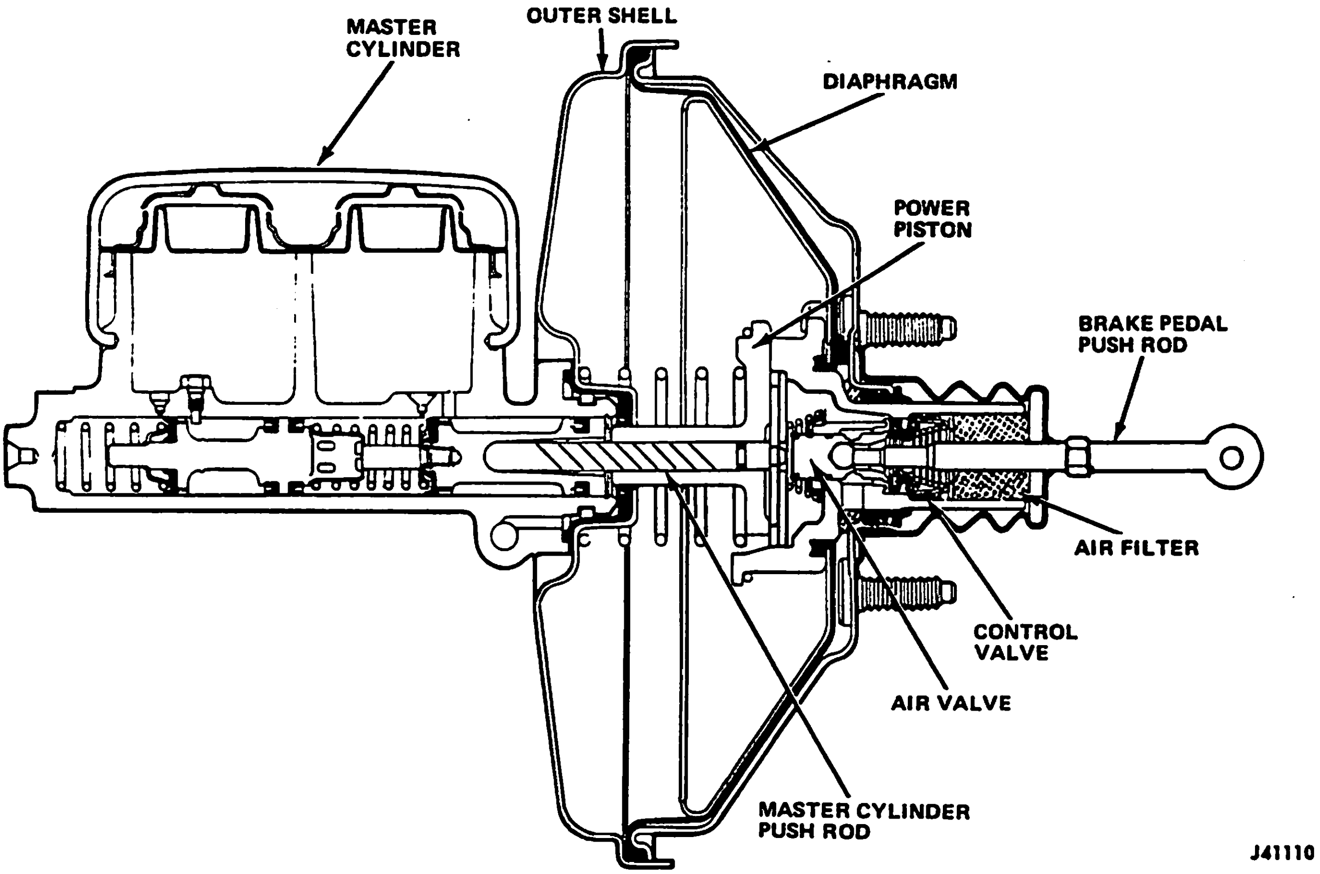

Fig. 2G-23 Single Diaphragm Power Unit—Typical

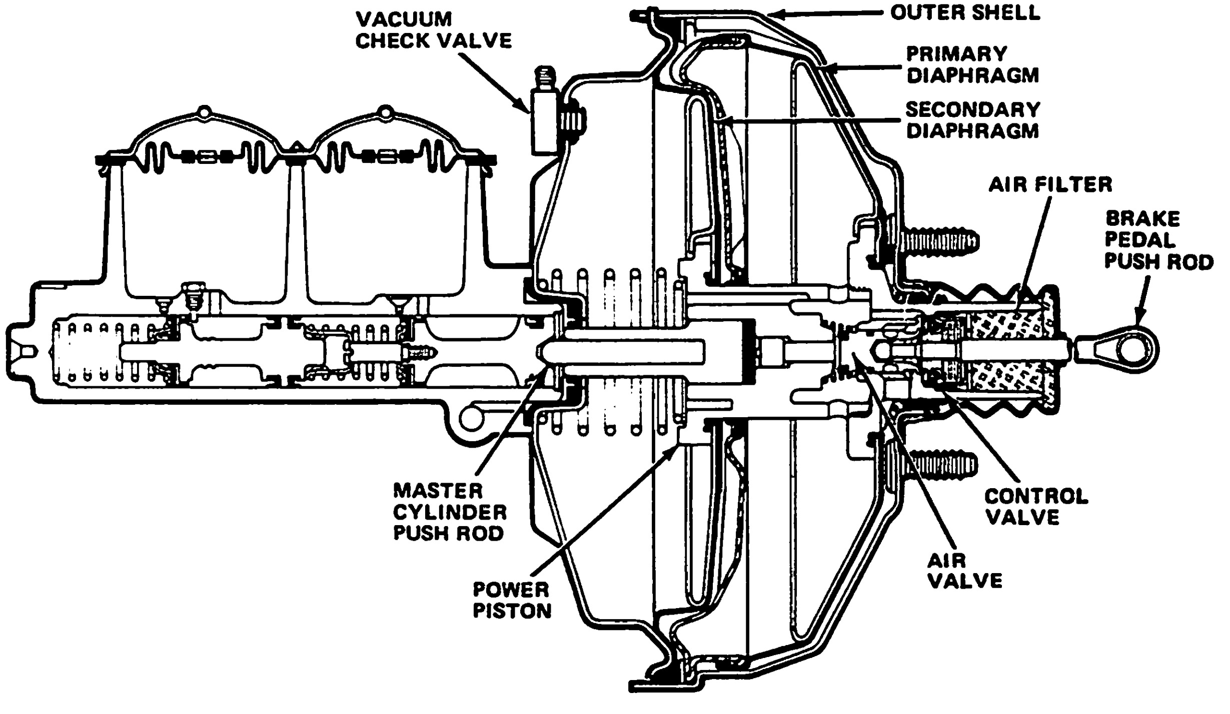

Fig. 2G-24 Tandem Diaphragm Power Unit—Typical tacts the raised seat on the power piston. When contact occurs, vacuum to the chamber space at the right side of the power piston is shut off.

At vacuum shut off, air under an atmospheric pressure of 14.7 psi (101.3 kPa), then flows into the right side of the chamber through the air filter. Since a vacuum still exists in the left side of the chamber, the force of air at atmospheric pressure on the right side of the power piston forces the piston and master cylinder push rod to the left applying the brakes.

When the brake pedal is released, the control valve returns to its seat against the air inlet valve shutting off the supply of air under atmospheric pressure. At this point, engine vacuum coming through the vacuum check valve again enters the right side of the chamber past the power piston.

In operation, the single and tandem diaphragm units function in exactly the same manner with one exception. The tandem unit utilizes two chambers on the right side of the power piston to develop atmospheric air pressure on the power piston.

POWER UNIT SERVICE

All power units are serviced as assemblies only. If diagnosis indicates that an internal malfunction has occured within a power unit, replace the unit as an assembly. Do not attempt to repair the unit.

All power units have a single master cylinder push rod of a preset, nonadjustable length. When replacing a power unit, use the push rod supplied with the replacement power unit only. This push rod has been correctly gauged to the replacement unit.

POWER UNIT DIAGNOSIS

Power unit malfunction should be diagnosed using Brake Diagnosis Guide B and the Power Unit and Service Diagnosis Charts. When diagnosing suspected power unit malfunctions, always perform the preliminary diagnosis procedures outlined in Brake Diagnosis Guide A first. This is an important step in avoiding inaccurate diagnosis and ineffective repair.

POWER UNIT REMOVAL

(1) Disconnect power unit push rod at brake pedal. Discard bolt and nut attaching rod to pedal.

(2) Disconnect vacuum at power unit check valve.

(3) Remove nuts and washers attaching master cylinder to power unit and move master cylinder aside. Do not disconnect brake lines at master cylinder.

(4) On CJ and Scrambler models, remove nuts and bolts attaching power unit bellcrank to dash panel and remove power unit and bellcrank as assembly.

(5) On Cherokee, Wagoneer and Truck models, remove nuts and washers attaching power unit to dash panel and remove power unit.

NOTE: *If the power unit is to be replaced on CJ and Scrambler models, remove the bellcrank from the original power unit, lubricate the bellcrank pivot pins with chassis lubricant, and transfer the bellcrank to the replacement unit.*

POWER UNIT INSTALLATION

(1) On Cherokee, Wagoneer and Truck models, mount power unit on dash panel and install attaching washers and nuts. Tighten nuts to 35 foot-pounds (47 N•m) torque.

(2) On CJ and Scrambler models, mount assembled power unit and bellcrank on dash panel. Install bellcrank-to-dash panel attaching bolts and nuts. Tighten bolts to 35 foot-pounds (47 N•m) torque.

(3) Connect vacuum hose to power unit check valve.

(4) Position master cylinder on power unit and install cylinder attaching washers and nuts. Tighten nuts to 30 foot-pounds (41 N•m) torque.

(5) Align power unit push rod and brake pedal and install replacement pedal attaching bolt and nut. Tighten bolt and nut to 35 foot-pounds (47 N•m) torque.

DRUM BRAKES

GENERAL

Two different drum brake units are used on Jeep vehicles. The brakes used on CJ and Scrambler models have a cable operated automatic adjuster mechanism, while the brakes used on Cherokee, Wagoneer and Truck models have a linkage operated automatic adjuster mechanism. Although the units differ slightly in construction, operation and service procedures for both units are similar.

Each drum brake unit consists of a support plate, a primary and a secondary brakeshoe, two brakeshoe return springs, an adjusting screw assembly, two holddown springs, automatic adjuster components, and a wheel cylinder assembly (figs. 2G-25 and 2G-26).

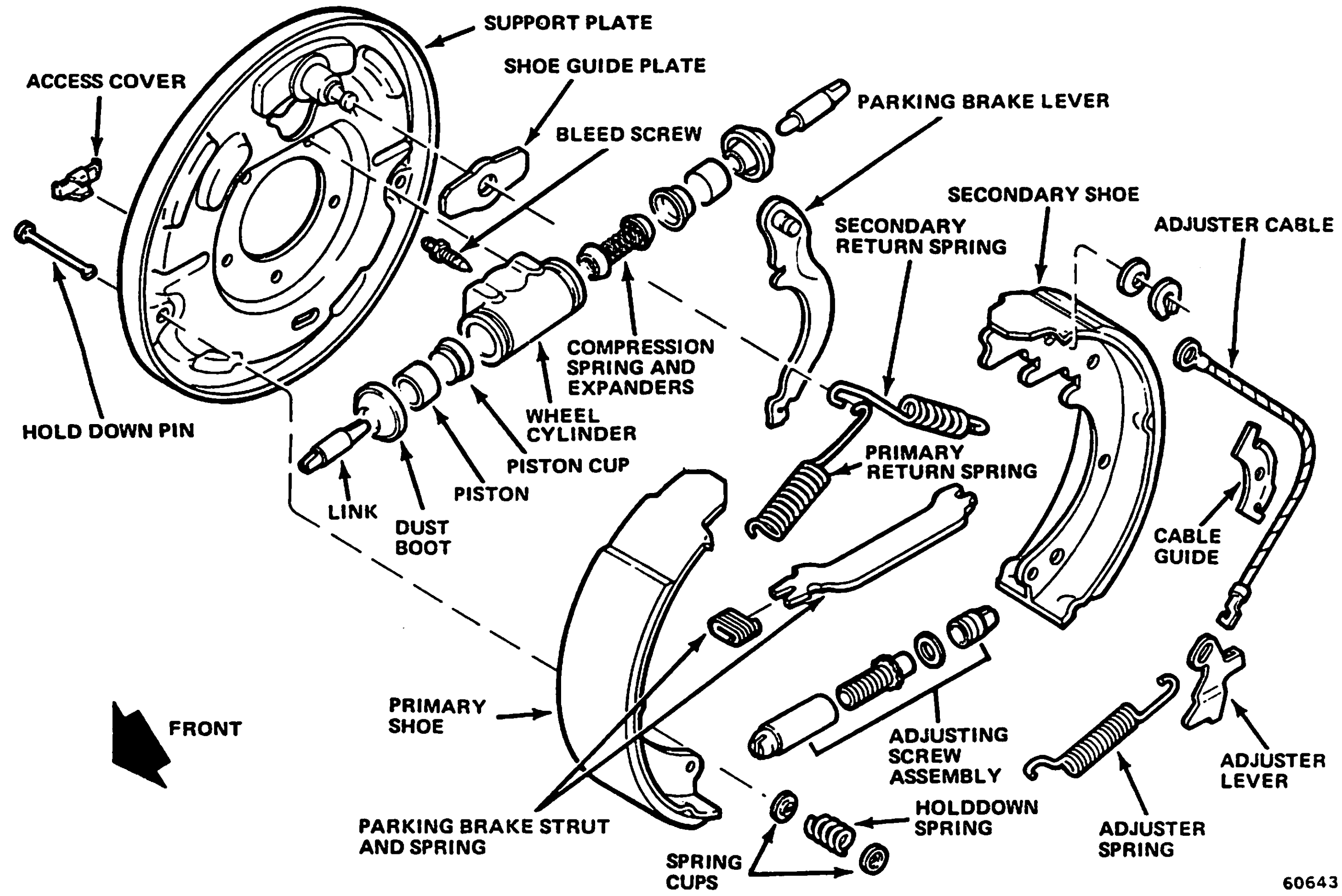

Fig. 2G-25 Drum Brake Assembly—CJ and Scrambler Models

OPERATION AND WEAR COMPENSATION

Operation

When the brakes are applied, fluid pressure developed in the master cylinder is transmitted to the wheel cylinders forcing the cylinder pistons outward. This motion is transferred to the upper ends of the brakeshoes through links which interconnect the brakeshoes and wheel cylinder pistons.

As the brakeshoes are expanded and contact the drum, they tend to rotate with the drum. This action causes the primary brakeshoe to pivot downward and away from the support plate anchor pin and the secondary brakeshoe to pivot upward and against the anchor pin.

As the primary brakeshoe pivots downward, it exerts a rearward force on the adjuster screw assembly. Since the adjuster screw interconnects the lower ends of the brakeshoes, this additional force is transmitted directly to the secondary brakeshoe increasing its braking action. The additional force applied to the secondary brakeshoe accounts for the fact that the secondary brakeshoe linings are generally thicker and have more contact area.

When the brakes are released, the return springs overcome the diminishing fluid pressure and return the brakeshoes and wheel cylinder pistons to the neutral position.

During a reverse stop, the drum brakes operate in the same mode as for a forward stop. However, because the drum is rotating in the opposite direction, the secondary brakeshoe now operates, in effect, as the primary brakeshoe.

Parking Brake Operation

The parking brake lever is mounted on the back of the brakeshoe and is connected to it by a pivot pin installed in the upper end of the lever. The pin is retained in the brakeshoe by a washer and U-clip. The parking brake cable is attached to the lower end of the lever. A strut, located just below the pivot pin, connects the lever to the primary brakeshoe. The strut is notched at each end and fits into matching notches in the brakeshoe and lever. The strut is positioned in the brakeshoe by an oval shaped spring.

When the parking brakes are applied, the cable pulls the lower end of the lever forward causing the connecting strut to push the primary brakeshoe forward also. At the same time, the upper end of the lever pushes the secondary brakeshoe rearward. The combined action of lever and strut expands the brakeshoes forcing them against the drum to develop braking action.

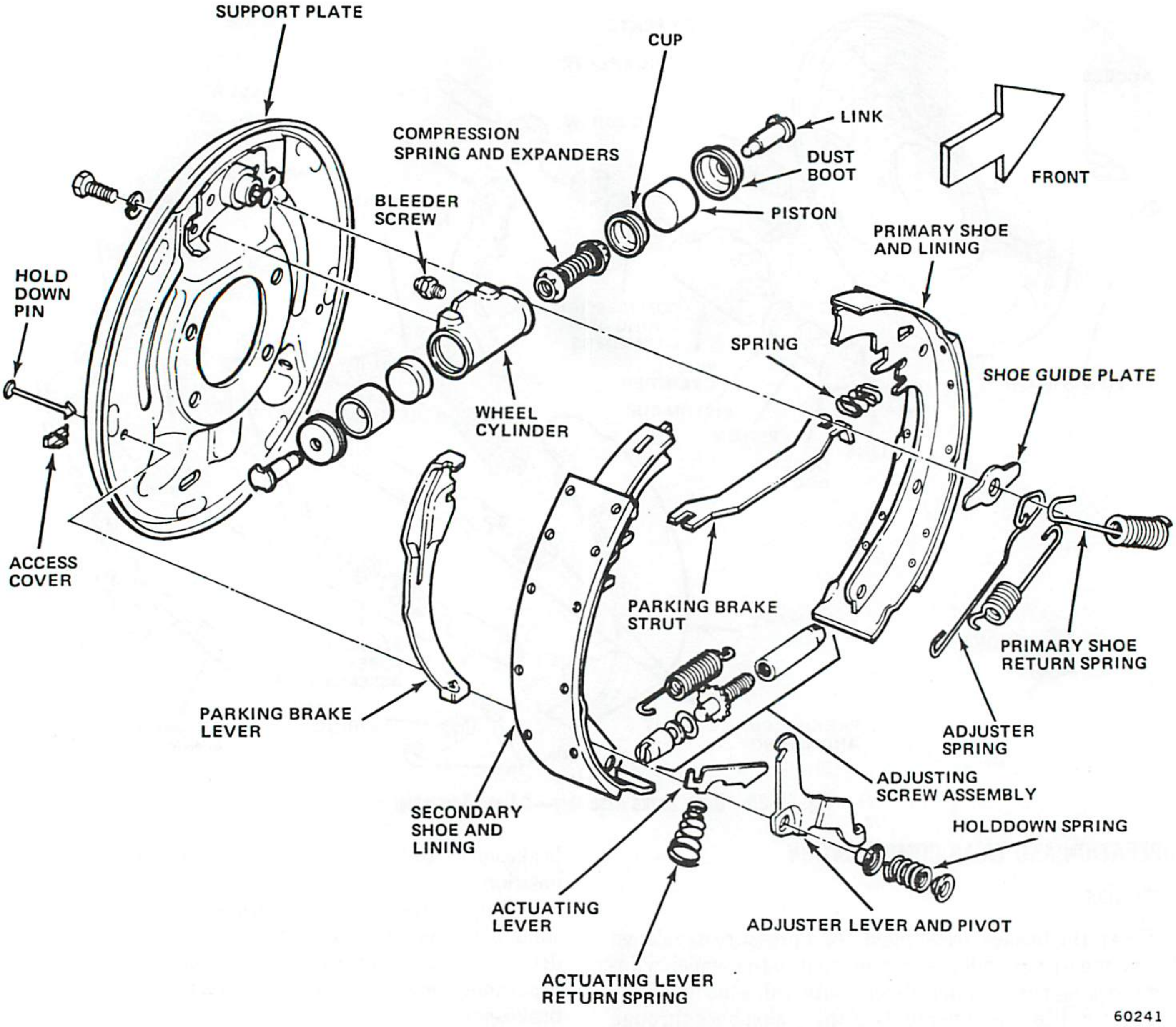

Fig. 2G-26 Drum Brake Assembly—Cherokee-Wagoneer-Truck Models

Wear Compensation

The automatic adjuster mechanism continuously maintains correct lining-to-drum operating clearance by adjusting the brakes in small increments in direct proportion to lining wear. This continuous adjustment prevents a gradual increase in brake pedal travel as the linings wear. The adjuster mechanism also adds the safety feature of maintaining adequate pedal reserve during the service life of the lining.

When the lining wears enough to require adjustment, the adjusting cable (CJ/Scrambler) or actuating lever (Cherokee, Wagoneer and Truck) lifts the lever into engagement with the next tooth of the adjusting screw during reverse brake applications. When the brakes are released, the brakeshoes return to the anchor pin.

The adjuster mechanism utilizes movement of the secondary shoes during reverse brake applications to actuate the adjuster mechanism.

This action will repeat on subsequent brake applications until the drum-to-lining clearance is reduced to a point where shoe movement is no longer sufficient to cause the adjuster mechanism to lift the lever to the next adjuster screw tooth.

BRAKE SERVICE—CJ AND SCRAMBLER MODELS

Disassembly

WARNING: *When servicing wheel brake parts, do not create dust by grinding or sanding brakelinings or by cleaning wheel brake parts with a dry brush or with compressed air. Use water dampened cloths only to remove dirt from brake parts prior to disassembly. Many wheel brake parts contain asbestos fibers which can* *become airborne if dust is created during servicing. Breathing dust containing asbestos fibers may cause serious bodily injury.*

(1) Raise vehicle.

(2) Remove wheels and drums.

(3) Grasp adjusting lever with pliers and remove lever tang from hole in secondary shoe.

(4) Place Brake Cylinder Clamps J-8002 over wheel cylinders to hold pistons in place while shoes are removed.

(5) Remove return springs using Brake Spring Remover Tool J-8057.

(6) Remove secondary return spring, adjuster cable, primary return spring, cable guide, adjuster lever, and adjuster springs.

(7) Remove holddown springs and brakeshoes.

(8) Disengage parking brake cable from parking brake lever.

Cleaning and Inspection

Clean all parts, except the brakeshoes and brake drums, with brake cleaning solvent only. Clean brake drums with a soap and water solution only and replace brakeshoes that are contaminated with grease or brake fluid. Remove dirt and dust from the support plate using water dampened shop cloths only.

Pull the wheel cylinder dust boots aside and check for evidence of leakage. If leakage is observed, overhaul the wheel cylinders.

Polish the brake support plate ledges with fine sandpaper or emery cloth. If grooves, which may restrict shoe movement, still exist after polishing, replace the support plate. Do not attempt to remove grooves by grinding the ledges smooth as this could result in improper shoe-to-drum contact.

Inspect the lining wear pattern. If the wear across the width of the lining is uneven, check the drums for a bell-mouthed condition, inspect the drums for correct positioning, and inspect the support plate for distortion. Inspect all springs for evidence of overheating (discoloration), fractures, or distortion.

On CJ and Scrambler models, inspect the adjuster cable for kinks, fraying, or for an elongated (worn) eyelet. On all other models, inspect the adjuster levers for wear, cracks, or distortion.

Inspect the adjusting screw for freedom of rotation and the adjuster lever for wear and distortion.

Inspect the brake lines for evidence of leakage, swelling, distortion, kinks, or cracks.

Clean the support plates using compressed air or dry cloths and polish the anchor pins with crocus cloth. Also check the pins for being loose, worn, or damaged. Inspect the support plates for distortion or cracks and check the support plate-to-axle flange bolt torques.

Clean the brakedrums with a soap and water solution only. Inspect the drums for excessive wear, scoring, runout, cracks, heat checks, hard spots, or distortion. Mount the drums on a brake lathe and check runout using a dial indicator. Radial runout must not exceed 0.005 inch. If runout exceeds this figure, replace or turn the drum. If the drums are machined, do not remove more than 0.030 inch (0.76 mm) total. Maximum allowable oversize for any drum is 0.060 inch (1.52 mm) over the original diameter. In addition, do not attempt to refinish drums with hard spots. Replace drums with this condition.

Assembly and Adjustment

NOTE: *When it is necessary to replace the brakeshoes on one wheel, the brakeshoes must also be replaced on the opposite wheel to maintain braking balance.*

(1) Lubricate support plate ledges, anchor pin, self-adjuster cable guide, adjuster screw threads and pivot, and parking brake cable lever and pivot with molydisulphide grease or chassis lubricant.

(2) Install parking brake lever on secondary brakeshoe and install washer and replacement lever retaining U-clip. Crimp ends of clip using pliers to retain it on pivot.

(3) Position brakeshoes on brake support plate and install holddown springs (figs. 2G-25 and 2G-26).

(4) Install parking brake cable in lever and install parking brake strut and positioning spring.

(5) Place adjuster cable eyelet on anchor pin.

(6) Install primary return spring (fig. 2G-27).

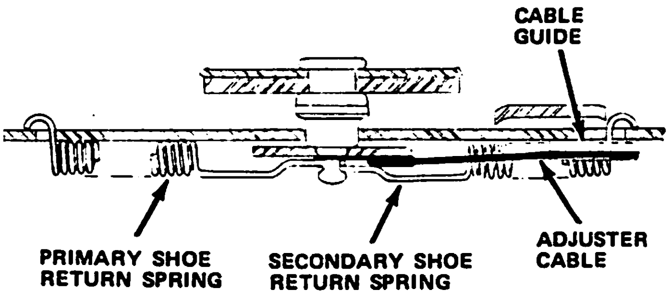

Fig. 2G-27 Return Spring Installation

(7) Install cable guide on secondary brakeshoe.

(8) Install secondary return spring (fig. 2G-27).

(9) Install adjusting screw and spring on brakeshoes. Insert small hooked end of spring in large hole in primary brakeshoe and large hooked end of spring in adjuster lever.

(10) Position adjuster cable in cable guide groove insert hooked end of cable in adjuster lever.

(11) Grip adjuster lever with pliers and hook lever tang in large hole at bottom of secondary brakeshoe.

(12) Perform initial brake adjustment using clearance gauge or manual adjustment procedure. Refer to Service Brake Adjustment.

(13) Install brakedrums.

(14) If any brake lines were disconnected, bleed brakes. Refer to Brake Bleeding.

(15) Install rear wheels and tires.

(16) Lower vehicle.

(17) Check brake operation before moving vehicle.

(18) Drive vehicle in reverse and make 10 to 15 firm brake applications to complete brake adjustment. Make one forward brake application after each reverse application to equalize adjustment.

NOTE: *If the vehicle has an automatic transmission, do not use the forward range to halt vehicle movement in reverse. This procedure will prevent the automatic adjuster mechanism from operating properly resulting in unsatisfactory pedal heights. All stops must be completed.*

BRAKE SERVICE—CHEROKEE-WAGONEER-TRUCK MODELS

WARNING: *When servicing wheel brake units, do not create dust by grinding or sanding brakelinings or by cleaning wheel brake parts with a dry brush or with compressed air. Use water dampened cloths only to remove dirt and dust from brake parts prior to disassembly. Many wheel brake parts contain asbestos fibers which can become airborne if dust is created during servicing operations. Breathing dust containing asbestos fibers may cause serious bodily harm.*

Disassembly

(1) Raise vehicle.

(2) Remove rear wheels and drums.

(3) Release parking brake and loosen locknuts at parking brake equalizer to relieve cable tension before removing rear drums.

(4) On Truck models with Model 60 full-floating rear axle, remove two screws that locate rear drums on hubs (fig. 2G-28).

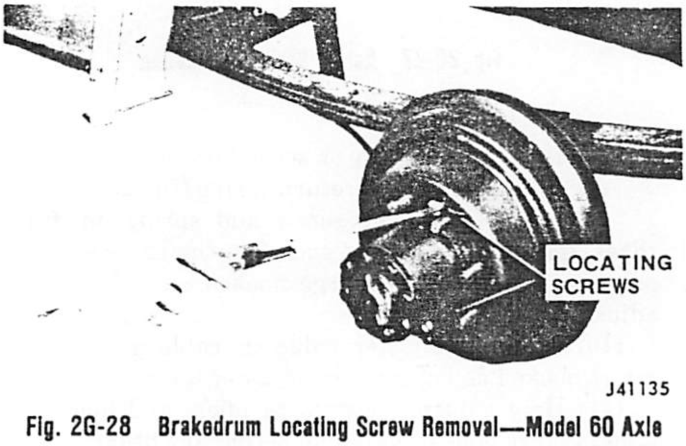

Fig. 2G-28 Brakedrum Locating Screw Removal—Model 60 Axle

(5) Remove primary brakeshoe return spring (fig. 2G-26).

(6) Remove automatic adjuster actuating spring and secondary brakeshoe return spring using Spring Remover Tool J-8057.

(7) Remove holddown springs and remove brakeshoes.

(8) Disengage parking brake cable from parking brake lever on secondary brakeshoe.

(9) Place Wheel Cylinder Clamps J-8002 over wheel cylinders to retain pistons (fig. 2G-29).

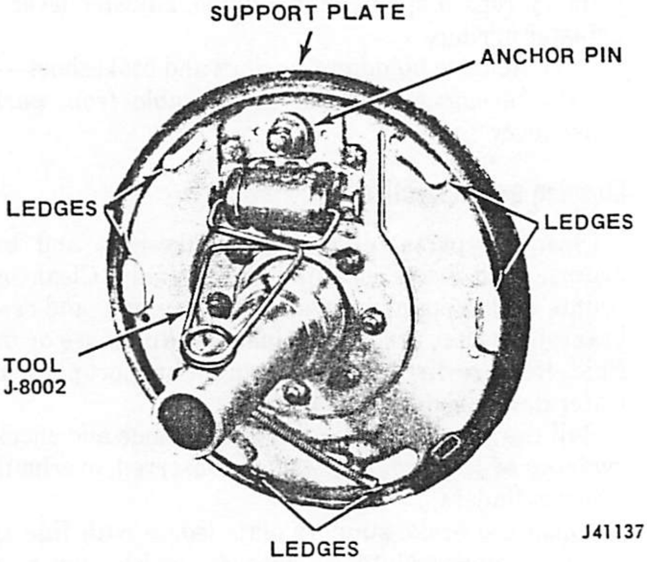

Fig. 2G-29 Wheel Cylinder Clamps Installed

Cleaning and Inspection

Inspect brakelining wear. Replace riveted lining if it is worn to within 1/32 inch (0.79 mm) of the rivet heads. Replace bonded lining if it is worn to a total thickness of approximately 1/16 inch (1.58 mm) or less.

Inspect the lining wear pattern. If wear is uneven across the width of the lining, replace the lining and check the drum for distortion and runout. Inspect the lining for cracks, charred surface, or broken rivets. Replace the lining if contaminated with brake fluid, axle lubricant, or similar contaminants or if the lining exhibits any of the conditions described previously.

Inspect the adjusting screw spring, return springs, holddown springs, actuating lever return spring, and automatic adjuster spring. Replace any springs that are distorted, broken, discolored (overheated), or lack tension.

Inspect the parking brake lever, automatic adjuster lever and pivot, and actuating lever for wear and defects. Replace levers if bent, broken, or excessively worn.

Inspect the adjusting screw pivot and screw threads. The screw must rotate freely. Inspect the screw serrations for excessive wear which could effect automatic adjustment.

Inspect the parking brake cables for being frayed, worn, kinked, or seized. Also check for missing or loose cable end retainer buttons. Inspect the parking brake lever for distortion, worn pivot pin, and for proper cable retention.

Inspect the wheel cylinders for evidence of leakage. Pull back the dust boots and check for signs of leakage past the piston cups. If necessary, overhaul the cylinder as described in this chapter. Inspect the bleeder screw and hydraulic line connection for evidence of leakage or damaged threads. Replace the wheel cylinder if the internal threads are damaged. Check the brake lines for swelling, distortion, kinks, or cracks. Replace any line exhibiting these conditions.

Clean the support plates using shop cloths or compressed air. Polish the anchor pins with crocus cloth and polish the support plate ledges with emery cloth. If the ledges have deep grooves or ridges which might restrict shoe movement, the support plate should be replaced. Do not attempt to reduce deep ridges or grooves by grinding. This can result in improper shoe-to-drum contact. Inspect the support plates for distortion or cracks and check the support plate-to-axle flange bolt torques. Inspect the anchor pins for wear or for being loose. Replace the support plate if it exhibits any of the conditions described previously.

Clean the brakedrums using a soap and water solution only.

CAUTION: *Do not use brake fluid, gasoline, kerosene, or similar solvents to clean the drums. Use a soap and water solution only to clean the drums.*

Inspect the drums for scoring, cracks, heat checking, hard spots, and distortion and check the drums for excessive runout. Mount the drums on a brake lathe and check runout using a dial indicator. Drum runout must not exceed 0.005 inch (0.12 mm). If drum runout is excessive, replace or remachine the drum.

CAUTION: *When machining drums, do not remove more than 0.030 inch (0.76 mm). Maximum allowable oversize for any drum is 0.060 inch (1.52 mm) over original diameter. In addition, do not attempt to machine drums with hard spots. Replace drums with this condition.*

Assembly and Adjustment

NOTE: *When it is necessary to replace the brakelining on one wheel, the lining must also be replaced on the opposite wheel to maintain braking balance.*

(1) Apply thin film of molydisulphide grease, or chassis lubricant to support plate ledges, anchor pin, adjusting screw threads and pivot, adjuster lever-to-secondary brakeshoe contact surface, parking brake lever pivot and portion of lever that contacts secondary brakeshoe.

(2) Connect parking brake cable to parking brake lever on secondary brakeshoe.

NOTE: *When installing the parking brake lever on replacement brakeshoes, pinch the U-clip to retain the lever on the shoe.*

(3) Install secondary brakeshoe, automatic adjuster lever, and lever pivot as assembly and install brakeshoe holddown spring.

(4) Install actuating lever and adjusting lever. Install return spring on actuating lever tang. Large end of tapered spring should rest on brakeshoe.

(5) Install primary shoe and holddown spring.

(6) Install guide plate on anchor pin.

(7) Install parking brake strut and spring on brakeshoes.

(8) Install adjusting screw and spring. Short hooked end of spring goes on primary brakeshoe. Long hooked end goes on secondary brakeshoe (fig. 2G-26).

(9) Install return springs and adjuster spring in following sequence (fig. 2G-26):

(a) install adjuster spring.

(b) install secondary brakeshoe return spring on brakeshoe and adjuster spring.

(c) install primary shoe return spring.

CAUTION: *Be sure the brakeshoes are seated against the anchor pin after installing the springs.*

(10) Perform initial brake adjustment. Refer to Service Brake Adjustment.

(11) Installbrakedrums.

(12) If brake lines were disconnected, bleed brakes. Refer to Brake Bleeding.

(13) Install wheels and tires.

(14) Lower vehicle.

(15) Test brake operation before moving vehicle.

(16) Perform final brake adjustment by making 10 to 15 forward and reverse stops to equalize adjustment and until satisfactory brake pedal height is obtained.

NOTE: *If the vehicle has an automatic transmission, do not use the forward range to halt reverse movement of the vehicle. This procedure will prevent the automatic adjusters from operating properly resulting in unsatisfactory pedal heights. All stops must be completed.*

BRAKEDRUM SERVICE

Inspection and Measurement

(1) Raise and support vehicle.

(2) Remove wheels.

(3) Remove brakedrums.

(4) Clean drums using soap and water solution. If drums are grease or oil contaminated, clean drums with alcohol before cleaning with soap and water.

(5) Inspect drums for cracks, severe scoring, distortion, or hard spots (a series of shiny or dark colored spots on contact surface). Replace drums that exhibit these conditons. If drums appear in good condition, proceed to next step.

(6) Refer to Specifications and measure drum inside diameter. If diameter is within limits and refinishing would not create an oversize condition, proceed to next step. If diameter exceeds limits or if drum needs refinishing but would exceed allowable size limits after machining, replace drum.

(7) Mount drum in lathe according to lathe manufacturer's instructions.

(8) Mount dial indicator on lathe so indicator stylus contacts lining surface of drum; zero dial indicator.

(9) Measure drum radial runout.

(a) Rotate drum 360 degrees and observe readings.

(b) Move indicator stylus until readings have been taken across entire contact surface of drum.

(c) Drum runout must not exceed 0.005 inch (0.12 mm) total indicator reading at any point. Also note if indicator readings increase or decrease greatly as stylus is moved across drum surface. Large changes may indicate tapered or bell-mouthed drum.

(10) If drum is within limits and does not need refinishing, install drum. If drum is not within limits or is lightly scored, refinsh drum. Refer to Brakedrum Refinishing.

Brakedrum Refinishing

(1) Sharpen or replace cutting tool bit if necessary.

(2) Install anti-chatter band on drum.

(3) Machine drum according to lathe manufacturer recommendations for feed and speed. Do not remove more than 0.010 inch (0.25 mm) of stock during any cut.

(4) Check drum radial runout again after completing machining operations.

NOTE: *When brakeshoes are replaced on one wheel, they must also be replaced on the opposite wheel to ensure balanced braking.*

SPECIFICATIONS

General Specifications

Brake Drum Radial Runout Limit	0.005 inches (0.12 mm)
Brake Drum Internal Diameter Limit:	
CJ-Scrambler Models	10.060 inches (25.5 cm)
Cherokee-Wagoneer-J-10 Truck	11.060 inches (28.09 cm)
J-20 Truck	12.060 inches (30.6 cm)
Brake Lining Wear Limits:	
Riveted Lining	Replace when worn to within 1/32 inch (0.79 mm) of rivet heads.
Bonded Lining	Replace when worn to thickness of approximately 1/16 inch (1.58 mm) or less.

80393

DISC BRAKES

GENERAL

Jeep vehicles are equipped with single piston, low drag, floating caliper front disc brakes. On CJ and Scrambler models, the caliper is positioned over the rotor and slides on two mounting pins which maintain caliper position relative to the rotor and caliper anchor plate (fig. 2G-30). On Cherokee, Wagoneer, and Truck models, the caliper is positioned on mounting bolts located in the caliper support bracket (fig. 2G-31). Although the two caliper designs differ in construction, caliper operation and service procedures are similar.

All models are equipped with an integral-type hub and rotor. CJ and Scrambler models use an 11.7 inch (29.71 cm) rotor. Cherokee, Wagoneer and J-10 Truck models use a 12.0 inch (30.48 cm) rotor. J-20 Truck models use a 12.5 inch (31.75 cm) rotor.

Both caliper types consist of a one-piece casting containing a piston, piston bore, bleeder screw and fluid inlet ports. The piston and piston seal are contained within the piston bore. The piston seal is located in a groove machined in the bore wall. A rubber dust boot with integral metal retainer is used on all models. The dust boot is located in a counterbore machined in the upper edge of the piston bore and in a groove machined in the exterior surface of the piston.

Caliper pistons are precision ground and plated to provide a hard, durable surface. Lining wear is compensated for by the lateral sliding movement of the caliper and by increased piston extension (fig. 2G-32).

A brakelining wear sensor, which consists of a strip of flanged metal, is attached to the inboard brakeshoe on Cherokee, Wagoneer and Truck models (a sensor is not

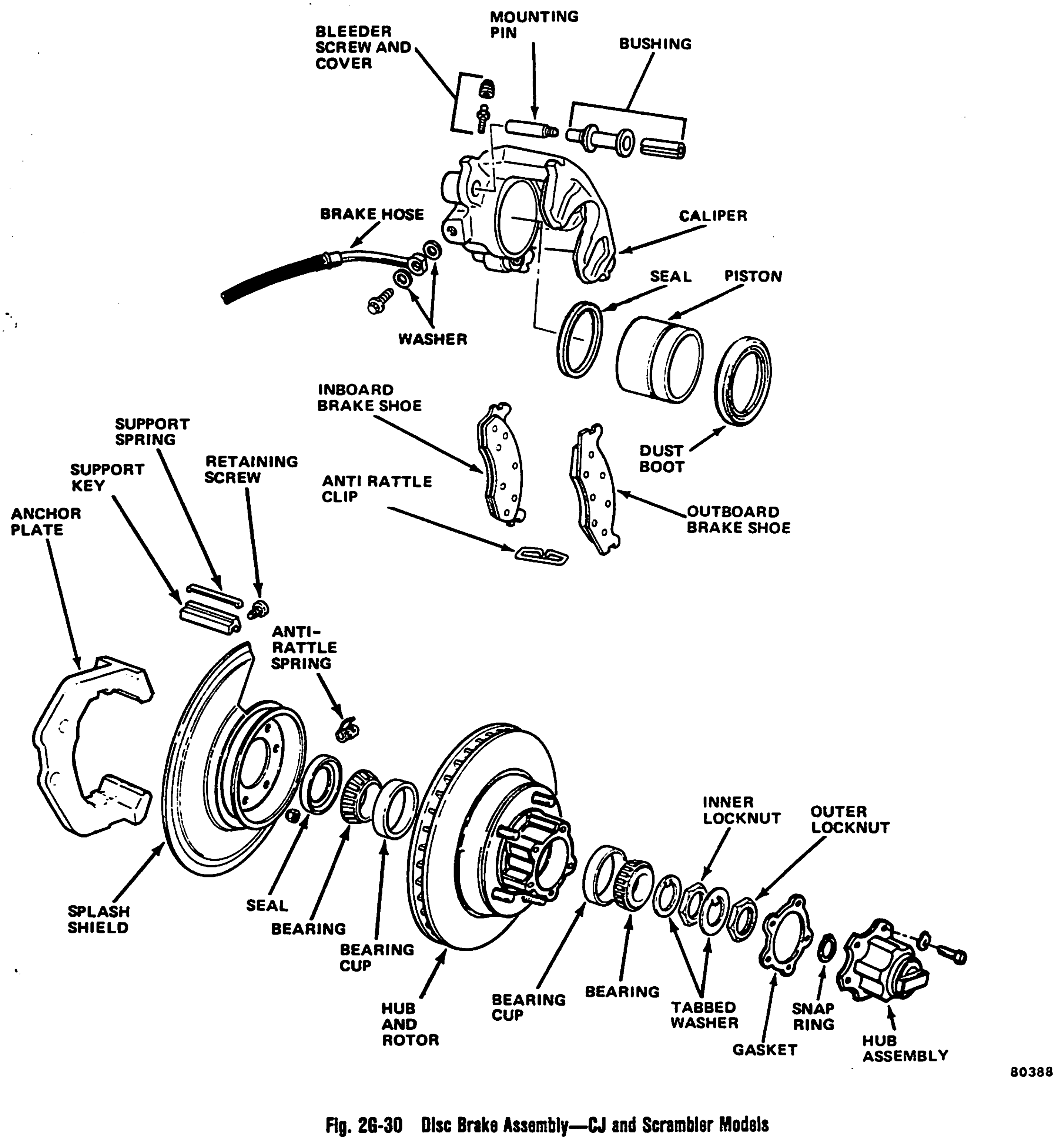

Fig. 2G-30 Disc Brake Assembly—CJ and Scrambler Models

used on CJ/Scrambler model lining). When the brakelining wears to the point of replacement, the sensor contacts the rotor surface making a high-pitched noise to alert the driver (fig. 2G-33).

DISC BRAKE OPERATION

Operation

The significant feature of disc brake operation is that the caliper is free to slide laterally on the mounting bolts or anchor plate abutment surfaces.

When the brakes are applied, fluid pressure is exerted equally against the piston and piston bore surfaces. Pressure applied to the piston is transmitted to the inboard shoe and lining pressing the lining against the rotor inboard surface. At the same time, pressure applied to the piston bore forces the caliper to slide inboard. This movement causes the outboard portion of

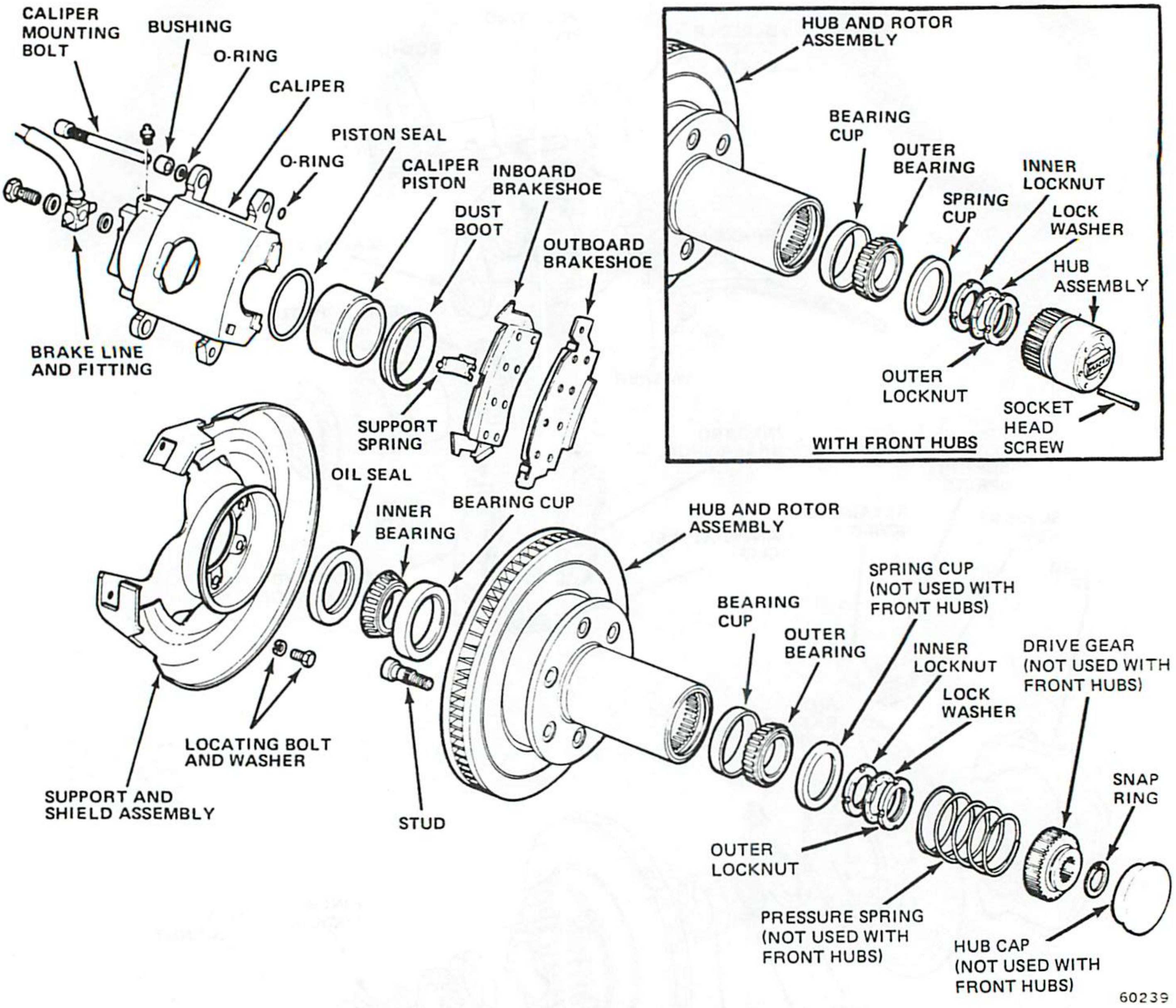

Fig. 2G-31 Disc Brake Assembly—Cherokee-Wagoneer-Truck Models

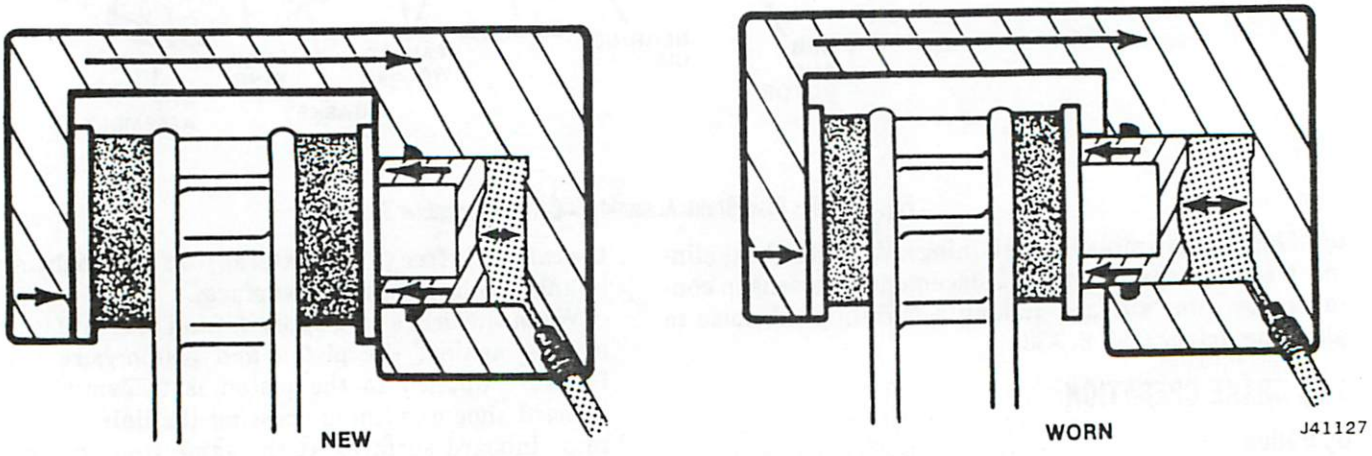

Fig. 2G-32 Piston Extension—New and Worn Linings the caliper to press the outboard shoe and lining assembly against the rotor outboard surface.

Any application or release of brake apply pressure produces piston and caliper movement. At release, the piston and caliper return to a neutral position. All models are equipped with low drag calipers which retract each caliper piston more fully than in previous designs. The result is less vehicle rolling resistance because brake lining drag on each brake rotor is reduced.

As the linings wear, the piston extends farther out of the caliper bore causing the caliper to reposition itself to maintain lining-to-rotor clearance. When the piston extends, additional brake fluid flows into the bore to compensate for the increase in bore volume caused by piston extension (fig. 2G-32).

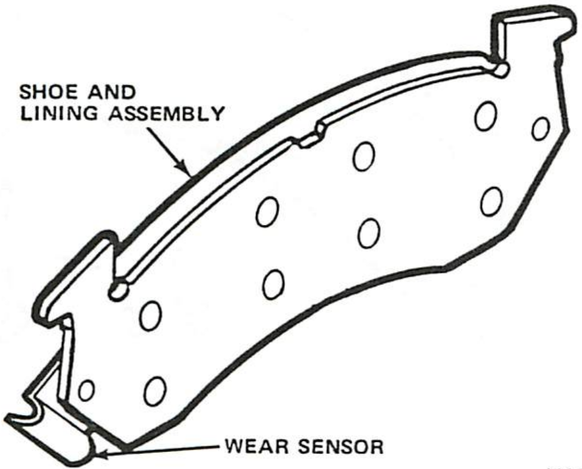

Fig. 2G-33 Brakelining Wear Sensor Location—Cherokee-Wagoneer-Truck Models

Wear Compensation

The piston seal maintains operating clearance between the rotor and lining and adjusts for wear during each brake application. When the brakes are applied, the seal is deflected by hydraulic pressure and by friction between the piston and seal. When hydraulic pressure is released, the seal reverts to its original shape and retracts the piston just enough to provide the necessary operating clearance.

As the linings wear, piston travel begins to exceed the seal deflection limit. The piston then moves outward through the seal just far enough to compensate for lining wear and reestablish normal seal deflection (fig. 2G-34).

BRAKESHOE REPLACEMENT—CHEROKEE-WAGONEER-TRUCK MODELS

WARNING: *When servicing wheel brake parts, do not create dust by grinding or sanding brakelinings or by cleaning wheel brake parts with a dry brush or with compressed air. Use water dampened shop cloths only to remove dirt and dust from brake parts prior to disassembly. Many wheel brake parts contain asbestos fibers which can become airborne if dust is created during servicing operations. Breathing dust containing asbestos fibers may cause serious bodily harm.*

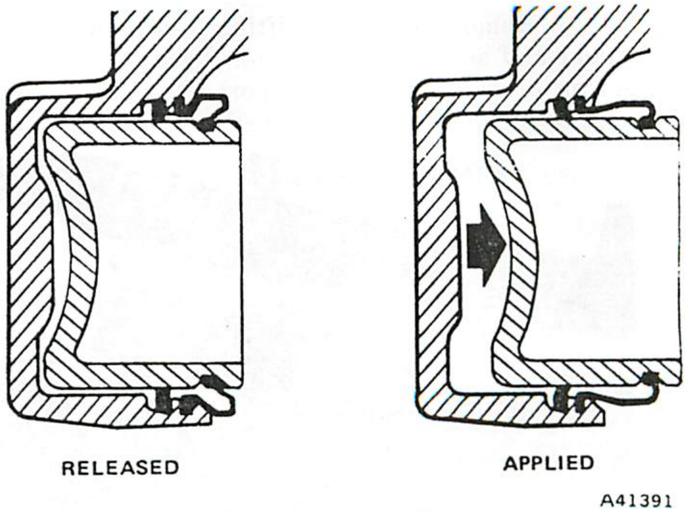

Fig. 2G-34 Piston and Seal Movement

Removal

(1) Remove two-thirds of brake fluid from master cylinder front reservoir.

(2) Raise vehicle.

(3) Remove front wheel and tire.

(4) Bottom caliper piston in bore. Insert screwdriver between piston and inboard shoe and press piston into bore. If piston is difficult to move using screwdriver, use large C-clamp.

(5) Remove caliper mounting bolts using hex wrench (fig. 2G-35).

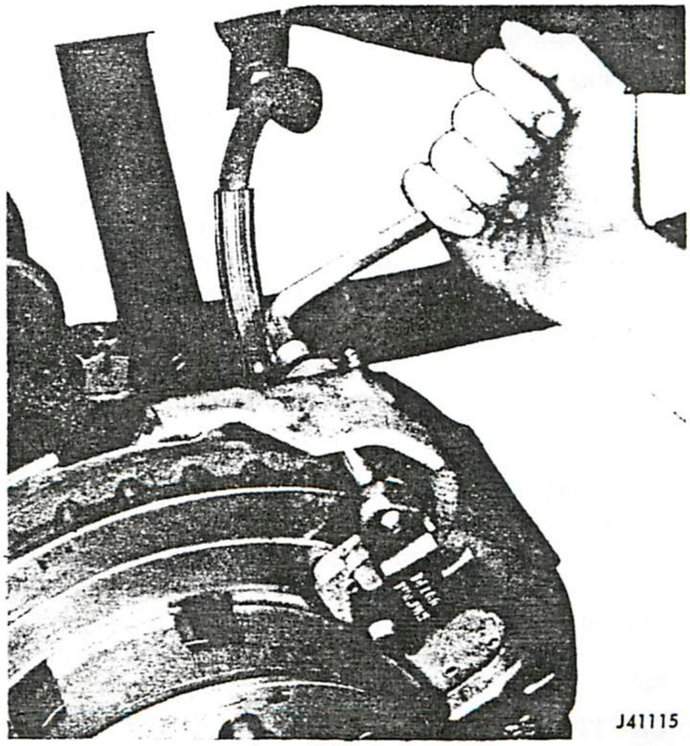

Fig. 2G-35 Caliper Mounting Bolt Removal

(6) Remove caliper by lifting it upward and out of shield and support (fig. 2G-36). Place caliper on front spring or other suitable support. Do not allow brake hose to support weight of caliper.

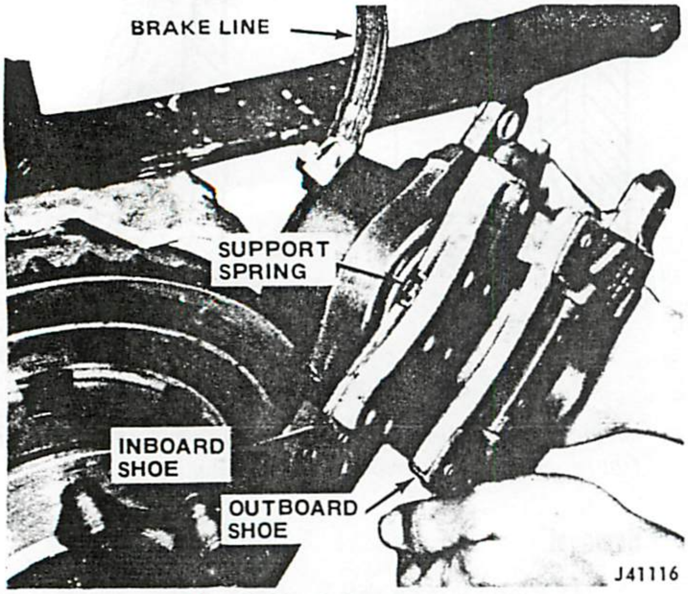

Fig. 2G-36 Caliper Removal

(7) Remove brakeshoes from caliper.

(8) Remove support spring from inboard shoe. Note spring position for assembly reference (fig. 2G-36).

(9) Remove sleeves and rubber bushings from mounting bolt bores in caliper mounting ears (fig. 2G-30).

(10) Clean mounting bolts, bolt bores, and bushing grooves in caliper mounting ears with brake cleaning solvent. Replace mounting bolts if corroded or if threads are damaged.

NOTE: *Do not use abrasives to clean or polish the mounting bolts. Abrasives will destroy the protective plating on the bolts.*

(11) Clean caliper interior and dust boot using shop cloths only. Inspect dust boot for cuts, cracks, and for proper seating in piston bore. If evidence of fluid leakage is noted during inspection, overhaul caliper.

CAUTION: *Do not use compressed air to clean the caliper interior or dust boot. The force of compressed air will unseat the boot. Use shop cloths only.*

Installation

(1) Lubricate replacement bushings, sleeves, bushing grooves, and small ends of mounting bolts with silicone lubricant.

(2) Install rubber bushings in caliper mounting ears.

CAUTION: *Do not use the original old bushings or sleeves. Use replacement parts only.*

(3) Install sleeves in inboard mounting ears of caliper. Position sleeves with sleeve end facing shoe and lining flush with machined surface of mounting ear.

(4) Install support spring on inboard shoe. Place single tang end of spring over notch in shoe (fig. 2G-37).

(5) Install inboard shoe in caliper (fig. 2G-38). Be sure shoe is flush against piston and that support spring is fully seated in piston (fig. 2G-38).

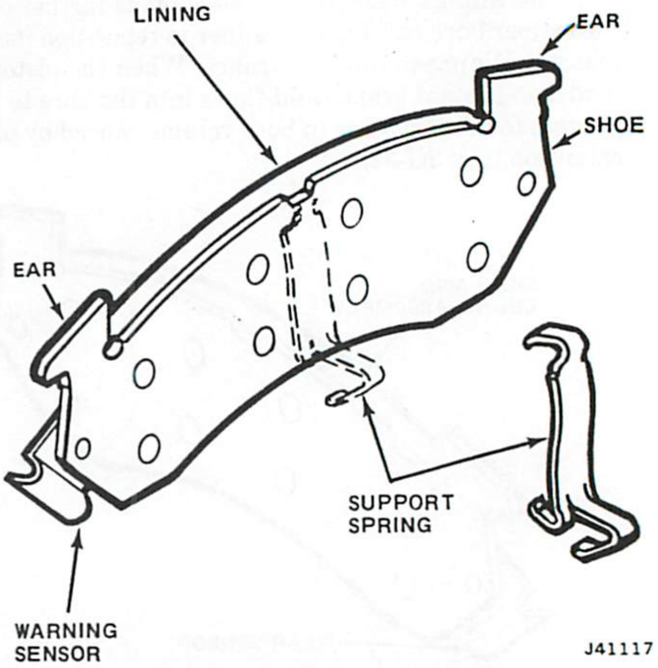

Fig. 2G-37 Support Spring Installation

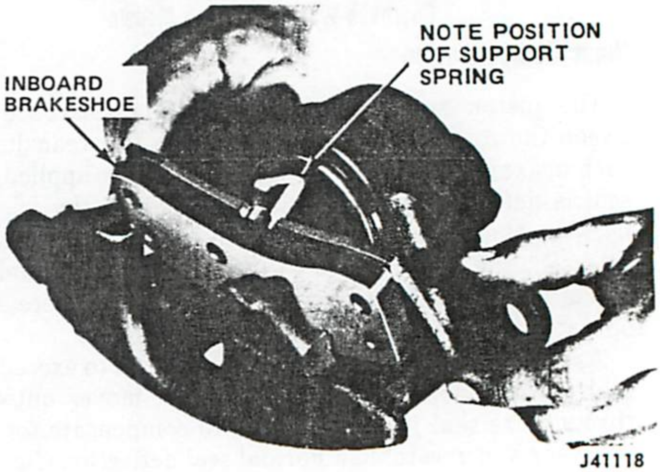

Fig. 2G-38 Inboard Brakeshoe Installation

(6) Install outboard shoe. Shoe ears should rest on upper surface of caliper mounting ears and lower shoe tab should fit into cutout in caliper. Be sure shoe is fully seated.

(7) Position caliper over rotor and in support shield and bracket. Align mounting holes in caliper and bracket.

(8) Install caliper mounting bolts. Be sure bolts

pass under inboard shoe retaining ears and insert bolts until they enter bores in outboard shoe and caliper mounting ears. Thread bolts into support bracket and tighten to 35 foot-pounds (47 N•m) torque.

(9) Fill master cylinder with brake fluid and pump brake pedal to seat shoes.

(10) Clinch upper ears of outboard shoe until radial clearance between shoe and caliper is eliminated.

NOTE: *Outboard shoes with formed ears are designed for original installation only and are fitted to the caliper. These shoes should never be relined or reconditioned for future installation.*

(11) Install wheel and tire.

(12) Lower vehicle.

(13) Check master cylinder fluid level. Add fluid as required to within 1/4 inch (6.35 mm) of reservoir rim.

(14) Apply brakes several times to seat brakeshoes.

(15) Check and correct master cylinder fluid level as necessary.

(16) Test brake operation before moving vehicle.

CALIPER OVERHAUL—CHEROKEE-WAGONEER-TRUCK MODELS

Removal

(1) Remove two-thirds of brake fluid from master cylinder front reservoir.

(2) Raise vehicle.

(3) Remove wheel and tire.

(4) Bottom caliper piston using screwdriver or large C-clamp.

(5) Clean brake line hose connection thoroughly using shop cloth.

(6) Disconnect brake line at caliper. Remove brake line bolt and copper gaskets. Discard copper gaskets.

(7) Cap or tape open end of brake hose to prevent dirt entry.

(8) Remove caliper and remove brakeshoes from caliper.

NOTE: *Work on one caliper at a time only. If shoes are to be reused, mark their location for assembly reference.*

Disassembly

(1) Clean caliper exterior with brake cleaning solvent.

(2) Drain remaining fluid from caliper and place caliper on clean work surface.

(3) Pad caliper interior with clean shop cloths (fig. 2G-39).

(4) Insert air nozzle into caliper fluid inlet hole and slowly apply just enough air pressure to ease piston out of bore (fig. 2G-39).

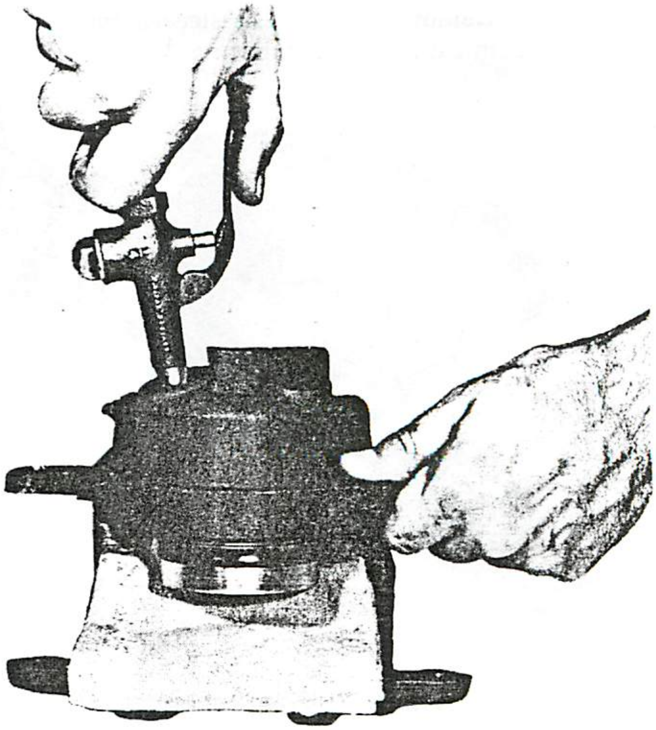

Fig. 2G-39 Piston Removal

WARNING: *Do not, under any circumstances, place fingers in front of the piston in an attempt to catch or protect it. In addition, use only enough air pressure to ease the piston out of the bore. Excessive air pressure can eject the piston with enough force to cause damage or injury.*

(5) Remove and discard dust boot. Use screwdriver to pry boot from bore (fig. 2G-40). Do not scratch piston bore during boot removal.

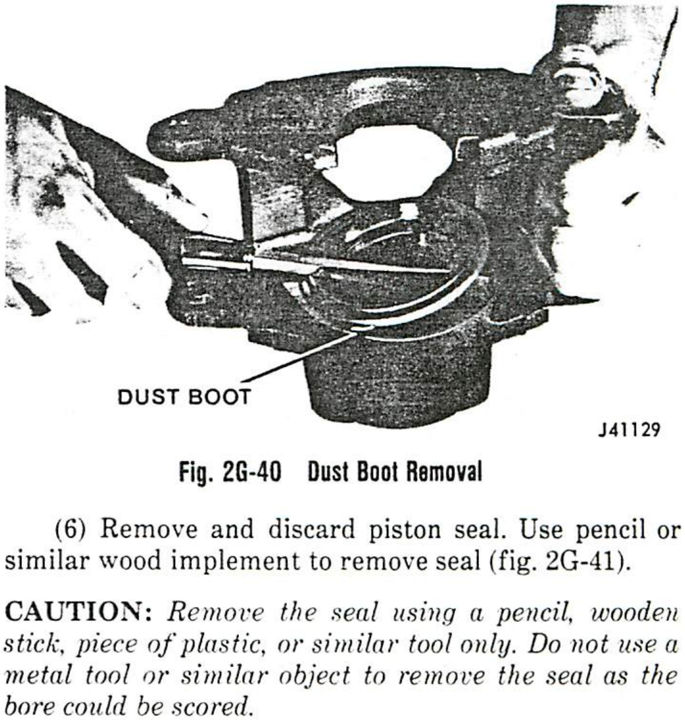

Fig. 2G-40 Dust Boot Removal

(6) Remove and discard piston seal. Use pencil or similar wood implement to remove seal (fig. 2G-41).

CAUTION: *Remove the seal using a pencil, wooden stick, piece of plastic, or similar tool only. Do not use a metal tool or similar object to remove the seal as the bore could be scored.*

(7) Remove bleeder screw.

(8) Remove and discard sleeves and rubber bushings from caliper mounting ears.

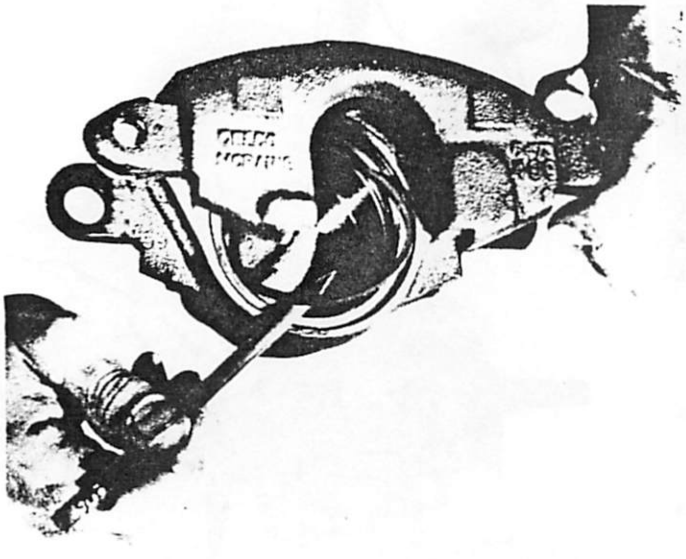

Fig. 2G-41 Piston Seal Removal

Cleaning and Inspection

Clean all parts in brake cleaning solvent or clean brake fluid only. Blow out all caliper passages using filtered compressed air only.

Replace the mounting bolts if corroded or if the threads are damaged. Do not attempt to clean or polish the mounting bolts with abrasives as the protective plating will be removed.

Inspect the caliper piston. Replace the piston if nicked, scratched, corroded, or if the protective plating has worn off.

CAUTION: *Do not attempt to refinish the piston in any way. The outside diameter is the sealing surface and is manufactured to very close tolerances. Removal of the nickel-chrome protective plating will lead to pitting, rusting, and eventual piston seizure.*

Inspect the piston bore. Replace the caliper if the bore is nicked, scratched, worn, cracked, or badly corroded. However, minor stains or corrosion can be removed using crocus cloth.

CAUTION: *Do not use emery cloth or similar abrasives on the piston bore. If the bore does not clean up with crocus cloth, replace the caliper. Clean the caliper thoroughly with brake fluid or brake cleaning solvent if the bore was polished.*

Assembly

(1) Lubricate piston bore and replacement seal with brake fluid.

(2) Install seal in bore groove. Work seal into groove using fingers only.

(3) Lubricate piston with brake fluid.

(4) Install replacement dust boot on piston. Slide metal retainer portion of boot over open end of piston and pull boot rearward until rubber boot lip seats in piston groove (fig. 2G-42).

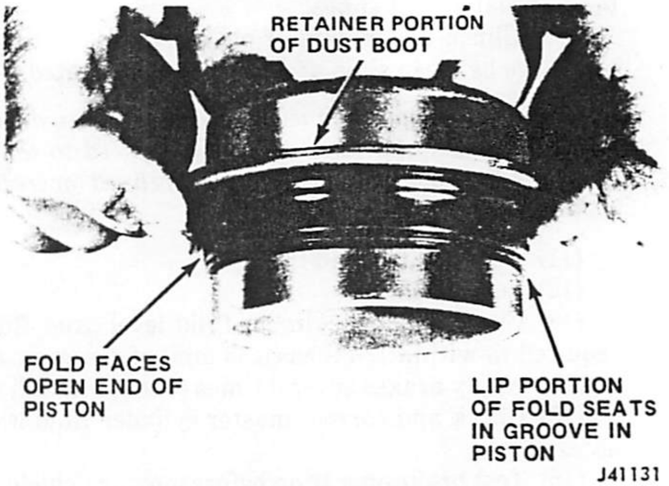

Fig. 2G-42 Installing Dust Boot on Piston

(5) Push metal retainer portion of boot forward until retainer is flush with rim at open end of piston and boot fold snaps into place (fig. 2G-43).

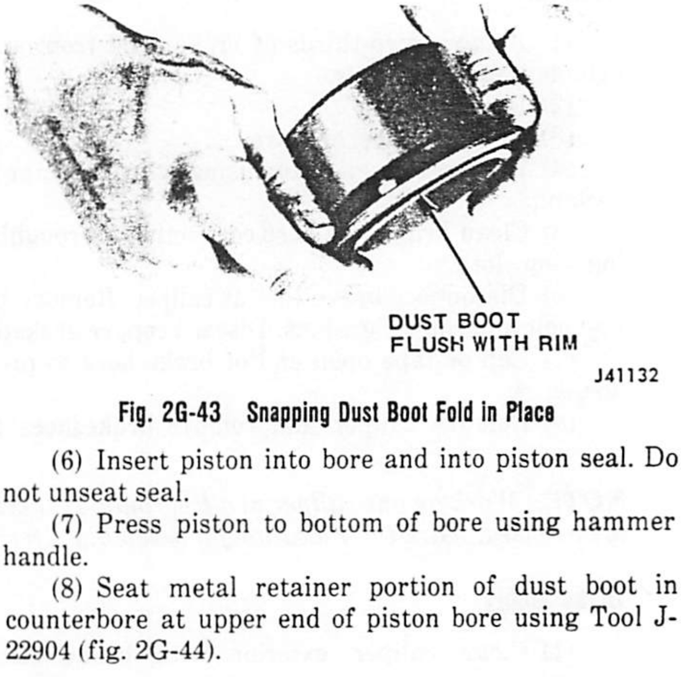

Fig. 2G-43 Snapping Dust Boot Fold in Place

(6) Insert piston into bore and into piston seal. Do not unseat seal.

(7) Press piston to bottom of bore using hammer handle.

(8) Seat metal retainer portion of dust boot in counterbore at upper end of piston bore using Tool J-22904 (fig. 2G-44).

CAUTION: *The metal portion of the dust boot must be seated evenly and below the face of the caliper.*

(9) Install bleeder screw. Tighten screw securely but not to required torque until brakes have been bled.

Installation

(1) Install replacement copper gaskets on brake line and connect line to caliper. Tighten brake line bolt to 160 inch-pounds (18 N•m) torque.

(2) Install brakeshoes, and replacement sleeves and bushings as outlined in Brakeshoe Replacement.

(3) Position caliper on rotor and support bracket and install caliper mounting bolts. Tighten bolts to 35 foot-pounds (47 N•m) torque.

(4) Bleed brakes as outlined in Brake Bleeding.

(5) Install wheel and tire.

(6) Lower vehicle.

(7) Check brake operation before moving vehicle.

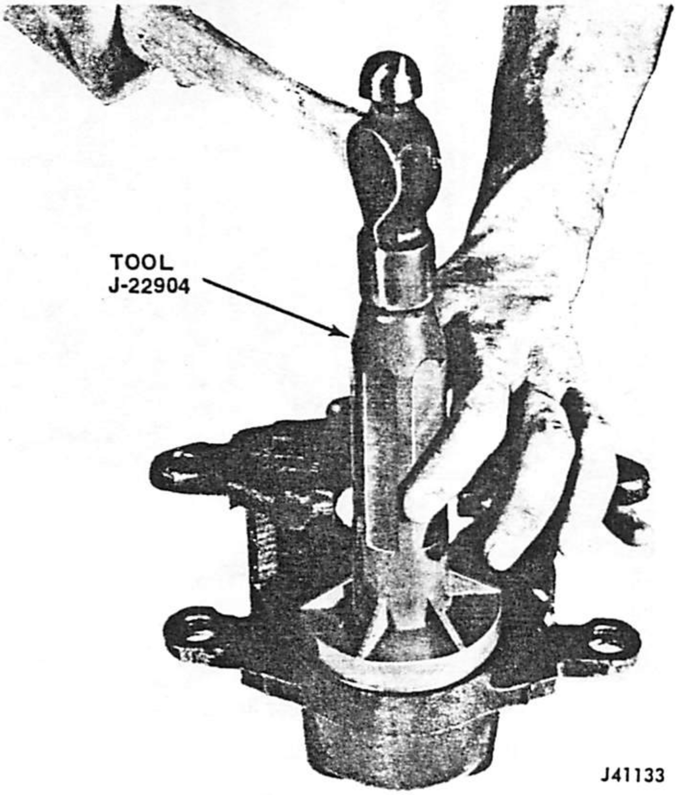

Fig. 2G-44 Seating Dust Boot in Counterbore

BRAKESHOE REPLACEMENT—CJ AND SCRAMBLER MODELS

WARNING: *When servicing wheel brake parts, do not create dust by grinding or sanding brakelinings or by cleaning brake parts with a dry brush or with compressed air. Use a water dampened cloth only to remove dirt and dust from brake parts prior to disassembly. Many brake parts contain asbestos fibers which can become airborne if dust is created during service operations. Breathing dust containing asbestos fibers may cause serious bodily harm.*

Removal

(1) Remove and discard two-thirds of fluid from largest master cylinder reservoir.

(2) Remove hub cap and loosen wheel retaining nuts.

(3) Raise vehicle.

(4) Remove front wheels.

NOTE: *Work on one caliper at a time only.*

(5) Press caliper piston to bottom of bore using screwdriver (fig. 2G-45). If piston is difficult to move, use large C-clamp.

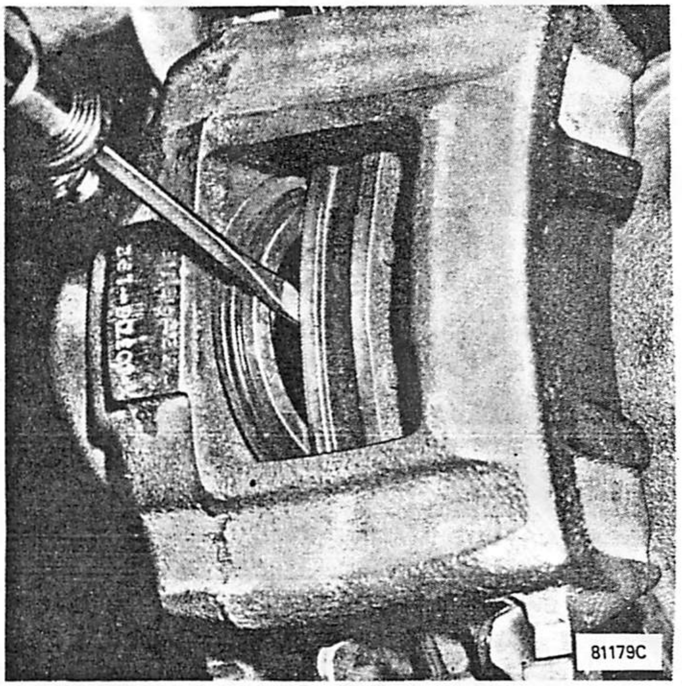

Fig. 2G-45 Bottoming Caliper Piston

(6) Remove caliper mounting pins using 7 mm hex wrench (fig. 2G-46).

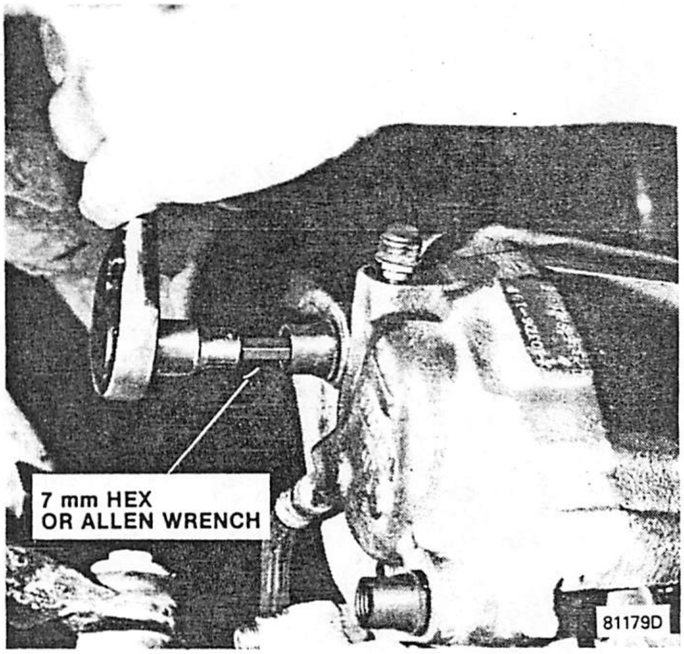

Fig. 2G-46 Mounting Pin Removal

(7) Lift caliper upward and out of anchor plate and off of rotor (fig. 2G-47).

(8) Place caliper on front suspension spring. Do not let brake hose support weight of caliper.

(9) Remove outboard brakeshoe from anchor plate

while holding anti-rattle clip (fig. 2G-48).

Fig. 2G-47 Caliper Removal/Installation

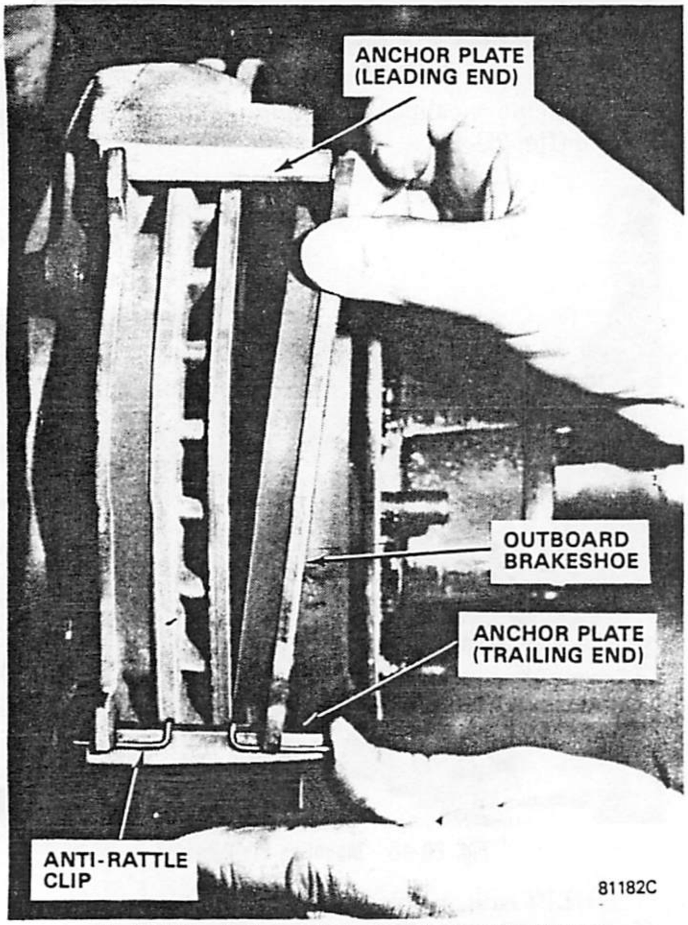

Fig. 2G-48 Outboard Brakeshoe Removal/Installation

(10) Remove inboard brakeshoe from anchor plate and remove anti-rattle clip (fig. 2G-49).

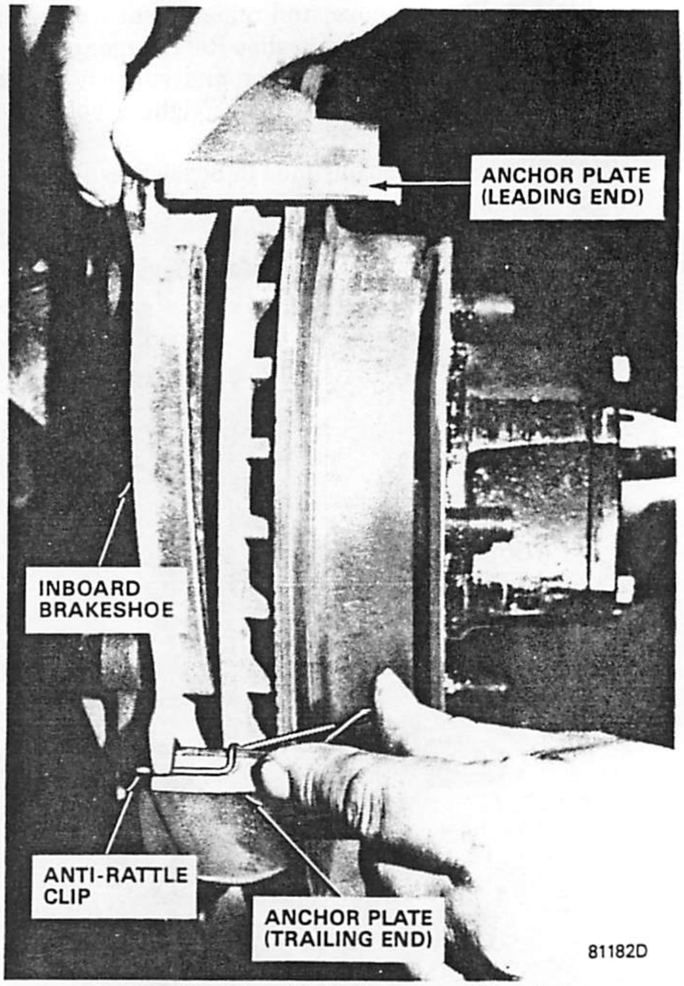

Fig. 2G-49 Inboard Brakeshoe Removal/Installation

(11) Clean caliper interior using shop cloths only.

CAUTION: *Do not use compressed air to clean the caliper interior. The force of compressed air is enough to dislodge or damage the dust boot.*

(12) Inspect caliper for evidence of leakage from piston bore. If leakage is evident, overhaul caliper. Refer to Caliper Overhaul—CJ and Scrambler Models.

(13) Inspect abutment (sliding) surfaces of caliper and anchor plate for rust or corrosion (fig. 2G-50). Clean these surfaces using stiff wire brush and fine grit sandpaper and lightly lubricate them with molydisulphide grease.

CAUTION: *It is important that the abutment surfaces be clean, smooth, and lightly lubricated with molydisulphide grease. Rust, corrosion, or foreign material on these surfaces will impair the sliding action of the caliper in the anchor plate.*

Installation

(1) Install anti-rattle clip on trailing end of anchor plate. Be sure split end of spring faces away from rotor (fig. 2G-49).

(2) Install inboard brakeshoe in caliper anchor plate

while holding anti-rattle clip in plate (fig. 2G-49).

(3) Install outboard brakeshoe in caliper anchor plate while holding anti-rattle clip in plate (fig. 2G-48).

(4) Install caliper over rotor and in anchor plate (fig. 2G-47).

CAUTION: *Be very careful to avoid tearing or dislodging the dust boot when installing the caliper. A damaged or displaced boot will expose the caliper piston to road splash resulting in corrosion and eventual piston seizure.*

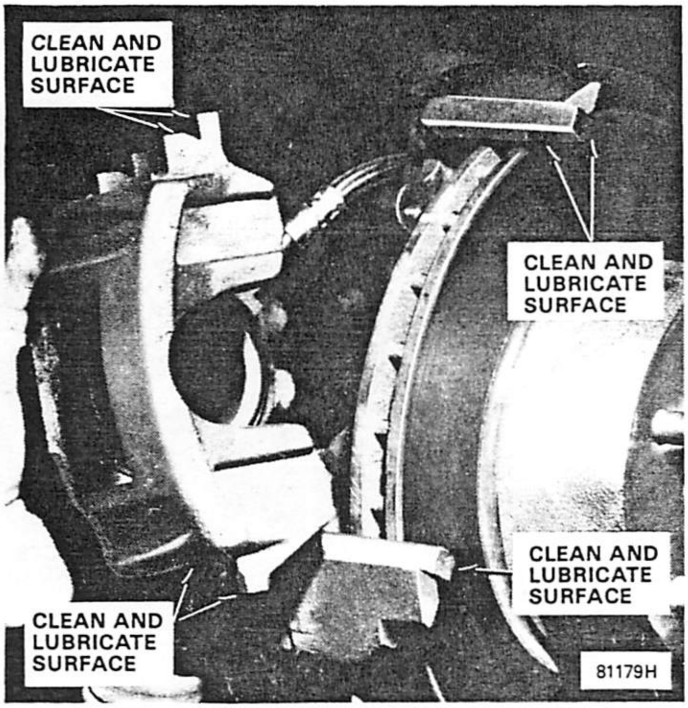

Fig. 2G-50 Caliper and Anchor Plate Abutment Surfaces

(5) Align caliper and anchor plate and install caliper mounting pins and tighten to 30 foot-pounds (40 N•m) torque.

(6) Fill master cylinder reservoir to within 1/4 inch (6.35 mm) of reservoir rim.

(7) Press firmly on brake pedal several times to seat shoes.

(8) Install wheels and tires.

(9) Lower vehicle.

(10) Recheck master cylinder fluid level and correct if necessary.

CAUTION: *Check for a firm brake pedal before moving the vehicle.*

CALIPER OVERHAUL—CJ AND SCRAMBLER MODELS

Removal

(1) Remove two-thirds of brake fluid from master cylinder front reservoir.

(2) Remove hub cap and loosen wheel retaining nuts.

(3) Raise and support vehicle.

(4) Remove front wheels.

NOTE: *Work on one caliper at a time only.*

(5) Clean caliper brake line fitting thoroughly.

(6) Disconnect brake line at caliper. Remove brake line bolt and washers. Discard washers. Cover open end of brake line with cloth or tape.

(7) Remove caliper and brakeshoes as outlined in Brakeshoe Replacement—CJ and Scrambler Models.

Disassembly

(1) Clean caliper exterior with brake cleaning solvent.

(2) Drain remaining fluid from caliper and place caliper on clean work surface.

(3) Pad caliper interior with clean shop cloths (fig. 2G-51).

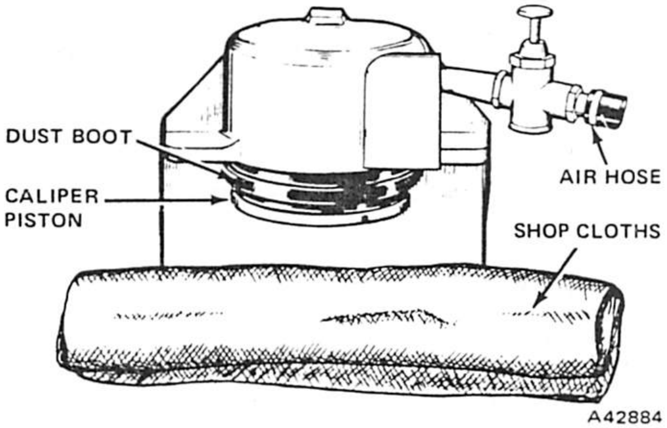

Fig. 2G-51 Caliper Piston Removal

WARNING: *Do not, under any circumstances, place fingers in front of the piston in an attempt to catch or protect it. In addition, use only enough air pressure to ease the piston out of the bore. Excessive air pressure can eject the piston with enough force to cause damage or injury.*

(4) Insert air nozzle into caliper fluid inlet hole and slowly apply just enough air pressure to ease piston out of bore (fig. 2G-51).

(5) Remove and discard dust boot. Use screwdriver to pry boot from bore. Do not scratch piston bore during boot removal(fig. 2G-52).

(6) Remove and discard piston seal. Use pencil or similar wood implement to remove seal.

CAUTION: *Remove the seal using a pencil, wooden stick, piece of plastic, or similar tool only. Do not use a metal tool or similar object to remove the seal as the bore could be scored.*

(7) Remove bleeder screw.

(8) Remove and discard plastic sleeves and rubber bushings from caliper mounting ears.

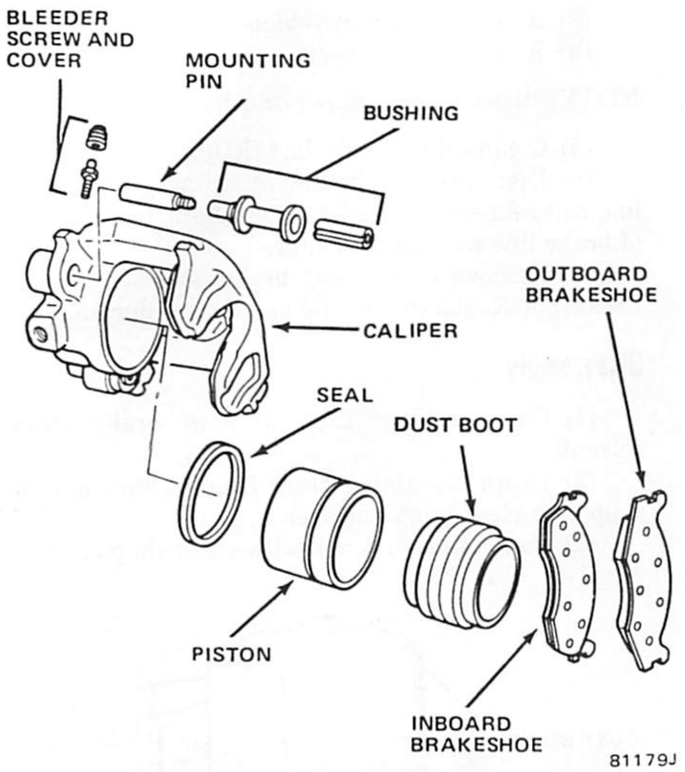

Fig. 2G-52 Caliper Assembly—CJ and Scrambler Models

Cleaning and Inspection

Clean all parts in brake cleaning solvent or clean brake fluid only. Blow out all caliper passages using filtered compressed air only.

Replace the mounting pins if corroded or if the threads are damaged. Do not attempt to clean or polish the mounting pins with abrasives as the protective plating will be removed.

Inspect the caliper piston. Replace the piston if nicked, scratched, corroded, or if the protective plating has worn off.

CAUTION: *Do not attempt to refinish the piston in any way. The outside diameter is the sealing surface and is manufactured to very close tolerances. Removal of the nickel-chrome protective plating will lead to pitting, rusting, and eventual piston seizure.*

Inspect the piston bore. Replace the caliper if the bore is nicked, scratched, worn, cracked, or badly corroded. However, minor stains or corrosion can be removed using crocus cloth.

CAUTION: *Do not use emery cloth or similar abrasives on the piston bore. If the bore does not clean up with crocus cloth, replace the caliper. Clean the caliper thoroughly with brake fluid or brake cleaning solvent if the bore was polished.*

Assembly

(1) Lubricate piston bore and replacement seal with brake fluid.

(2) Install piston seal in bore groove. Work seal into groove using fingers only.

(3) Lubricate piston with brake fluid.

(4) Install replacement dust boot on piston. Slide metal retainer portion of boot over *open* end of piston and pull boot rearward until rubber boot *lip* seats in piston groove (fig. 2G-53).

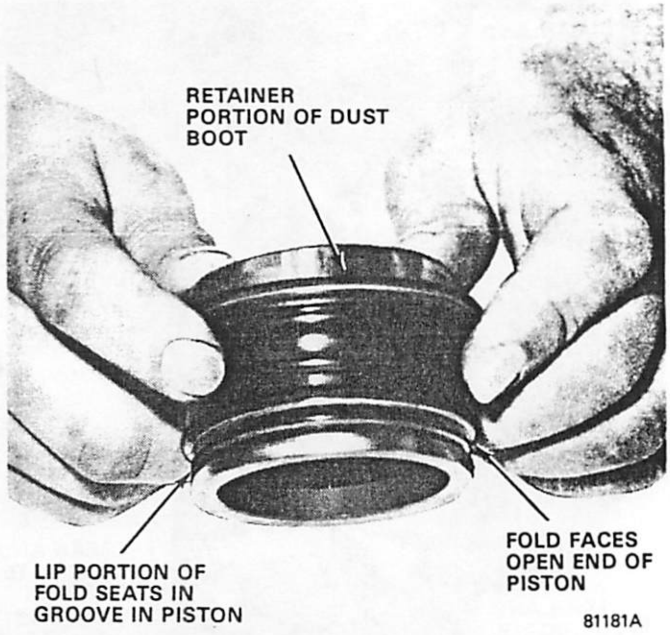

Fig. 2G-53 Installing Dust Boot on Piston

(5) Push metal retainer portion of boot forward until retainer is flush with rim at open end of piston and boot fold snaps into place (fig. 2G-54).

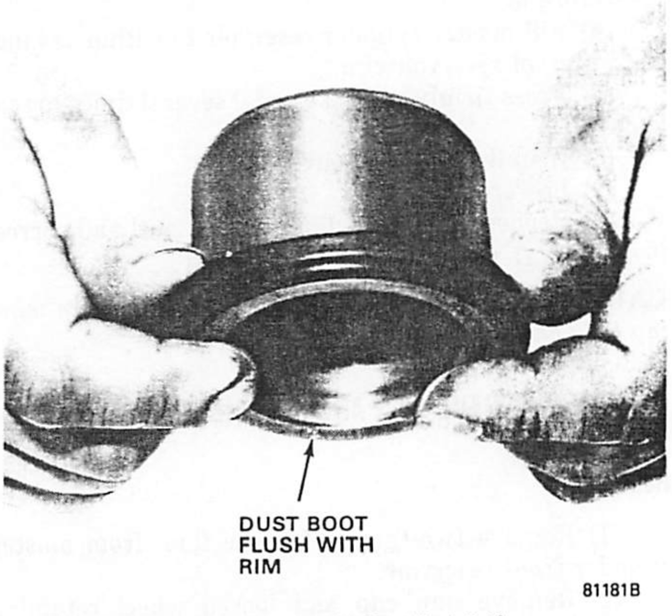

Fig. 2G-54 Positioning Dust Boot Fold

(6) Insert piston into bore and into piston seal. Do not unseat seal.

(7) Press piston to bottom of bore using hammer handle.

(8) Seat metal retainer portion of dust boot in counterbore at upper end of piston bore using Tool J-33028 (fig. 2G-55).

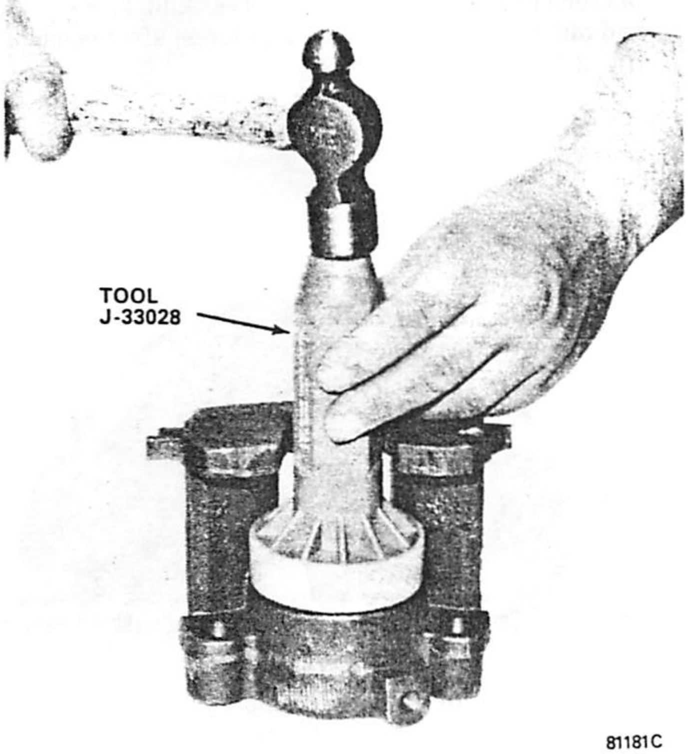

Fig. 2G-55 Seating Dust Boot in Counterbore

CAUTION: *The metal portion of the dust boot must be seated evenly and below the face of the caliper.*

(9) Install bleeder screw. Tighten screw securely but not to required torque until brakes have been bled.

(10) Install replacement plastic sleeves and rubber bushings in caliper mounting ears.

Installation

(1) Check rotor lateral runout and thickness variation. Inspect rotor for scoring, cracks, and broken ventilating ribs. Refer to Rotor Service for procedures.

(2) Install brakeshoes and caliper. Refer to Brakeshoe Replacement—CJ and Scrambler Models.

(3) Install replacement washers on brake line connector or fitting and connect brake line to caliper. Tighten brake line bolt to 160 inch-pounds (18 N•m) torque. Or, if equipped with brake line fitting, tighten fitting to 25 foot-pounds (34 N•m) torque.

(4) Fill master cylinder to within 1/4 inch (6.35 mm) of reservoir rims.

(5) Press brake pedal firmly several times to seat brakeshoes.

(6) Refill master cylinder, if necessary, and bleed brakes. Refer to Brake Bleeding.

(7) Install wheels.

(8) Lower vehicle.

(9) Check brake operation before moving vehicle.

ROTOR SERVICE

Rotor Inspection

(1) Raise and support front of vehicle.

(2) Remove front wheels.

(3) Remove caliper (do not disconnect brake line).

(4) Inspect rotor braking surfaces. If surfaces are only lightly rusted or scored, proceed to step (5). If surfaces are severely scored, cracked, chipped, excessively worn, or have hard spots (a series of shiny or dark colored spots), replace rotor.

(5) If rotor surfaces are only lightly scaled, rusted or scored, remove rotor, bearings and seal from rotor. Clean rotor hub bearing surfaces and mount rotor in brake lathe. Clean surfaces using flat sanding discs while rotor is turning in lathe.

(6) Remove rotor from lathe.

(7) Check rotor thickness at center of lining contact area. Thickness must be larger than minumum (replacement) specification and provide sufficient stock for refinishing if necessary. If rotor is within limits, proceed to next step. If rotor is less than minimum thickness specification or refinishing would leave it below minimum thickness specification, replace rotor.

(8) Install bearings and seal in rotor.

(9) Install rotor on steering spindle and check runout and thickness variation. Refer to Specifications for Tolerances.

Rotor Measurement

(1) Measure rotor lateral (face) runout (fig. 2G-56).

(a) Mount dial indicator on support stand or steering spindle.

(b) Position indicator stylus so it contacts center of rotor lining contact area and zero indicator.

(c) Turn rotor 360 degrees and note indicator reading. Runout must not exceed limit stated in Rotor Specifications.

(d) Refinish rotor if runout exceeds stated limit. Replace rotor if runout is so severe that machining would cause rotor to fall below minimum (replacement) thickness specification. Refer to Rotor Specifications.

(e) If runout is within limits, proceed to step (2).

NOTE: *Excessive lateral runout will cause rotor wobble resulting in chatter, vibration and pedal pulsation.*

(2) Measure rotor thickness variation (fig. 2G-57).

(a) Measure variation using micrometer or two dial indicators.

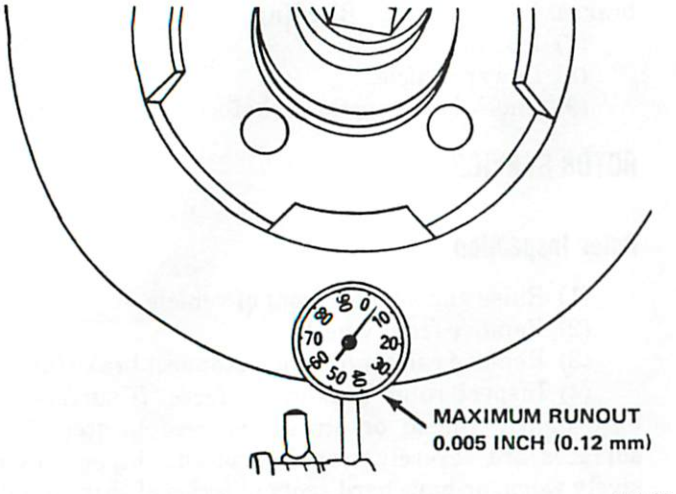

Fig. 2G-56 Checking Lateral Runout

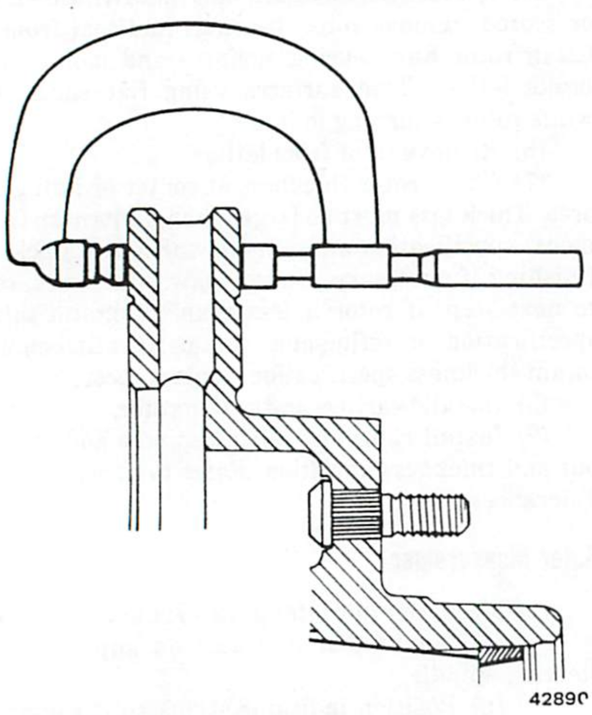

Fig. 2G-57 Checking Thickness Variation

(b) Take readings at four or more equally spaced points around rotor circumference and one inch (25 mm) inward from outer edge of rotor.

(c) Thickness variation, from point-to-point, must not vary by more than limit stated in Rotor Specifications.

(d) Refinish rotor if thickness variation exceeds stated limit. Replace rotor if machining will not correct variation or if machining would cause rotor to fall below minimum thickness specification.

NOTE: *Excessive thickness variation will cause pedal pulsation and vibration when the brakes are applied.*

Rotor Refinishing

Rotor refinishing should only be performed using equipment that will machine both of the rotor surfaces simultaneously (machining one side at a time can produce a tapered rotor). The correct surface finish is 15 to 80 microinches for CJ and Scrambler models; 20 to 60 microinches for Cherokee, Wagoneer and Truck models and must not have tool marks (grooves) after machining (fig. 2G-58).

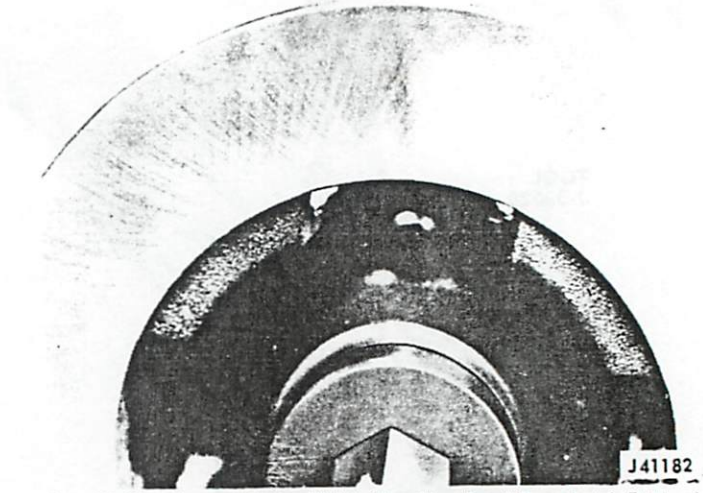

Fig. 2G-58 Correct Rotor Finish (Nondirectional Crosshatch Pattern)

NOTE: *If a rotor is glazed or highly polished, sanding the rotor may not produce the required rotor finish. It may be necessary to turn the rotor to meet the finish requirements.*

To ensure a correct surface finish, follow the lathe manufacturer's recommendations for feed and speed and either sharpen or replace dull cutting tool bits before machining rotor.

(1) Remove rotor from steering spindle.

(2) Remove bearings and seal from rotor and clean bearing surfaces in rotor hub thoroughly.

(3) Mount rotor in lathe according to manufacturer's instructions and install anti-chatter band.

(4) Sharpen or replace cutting tool bits as necessary.

(5) Machine rotor as necessary and according to lathe manufacturer's instructions only. Make two cuts if required and do not remove more than 0.007 inch (0.18 mm) at a time.

CAUTION: *Do not attempt to refinish the rotor if machining would cause the part to fall below the minimum (replacement) thickness specification for that rotor. Refer to the Specifications section.*

NOTE: *If one disc brake assembly requires a new set of brakeshoes, the shoes on the other assembly must also be replaced to ensure even braking.*

Rotor Replacement—CJ and Scrambler Models

Removal

(1) Raise and support vehicle.

(2) Remove wheel.

(3) Remove caliper. Refer to Brakeshoe Replacement—CJ and Scrambler models.

(4) Remove bolts attaching hub body to hub clutch and remove hub body.

(5) Remove retaining ring from axle shaft and remove hub clutch and bearing assembly.

(6) Straighten lip of outer locknut retaining washer.

(7) Remove outer locknut and retaining washer and remove inner locknut and retaining washer.

(8) Remove hub and rotor.

(9) Remove wheel bearings from rotor.

Installation

(1) Lubricate wheel bearings with EP-type, waterproof wheel bearing lubricant.

(2) Install wheel bearings and replacement grease seal in rotor.

(3) Install rotor.

(4) Install tabbed inner washer and inner locknut.

(5) Install wheel but do not tighten wheel nuts completely.

(6) Tighten inner locknut to 50 foot-pounds (68 N•m) torque using Tool J-25103. Rotate wheel while tightening locknut to seat bearings uniformly.

(7) Back off inner locknut 1/6 turn (45°-65°).

(8) Install outer tabbed washer and outer locknut. Tighten outer locknut to minimum of 50 foot-pounds (68 N•m) torque and bend lip of tabbed washer over locknut.

(9) Install hub clutch and bearing assembly on axle shaft.

(10) Install retaining ring on axle shaft.

(11) Install new gasket on hub body and install body on clutch and bearing assembly.

(12) Align bolt holes in hub body and rotor hub and install hub attaching bolts and tabbed lockwashers. Tighten bolts to 30 foot-pounds (41 N•m) torque.

(13) Install caliper. Refer to Brakeshoe Replacement—CJ and Scrambler Models.

(14) Lower vehicle.

Rotor Replacement—Cherokee-Wagoneer-Truck Models

Removal

(1) Remove wheel cover, if equipped, and loosen wheel retaining nuts.

(2) Raise vehicle.

(3) Remove wheels.

(4) Remove caliper. Refer to Brakeshoe Replacement—Cherokee-Wagoneer-Truck Models.

(5) On models without front hubs:

(a) Remove rotor hub cap.

(b) Remove drive gear snap ring and remove drive gear, pressure spring, and spring cup.

(6) On models with front hubs:

(a) Remove socket head screws attaching hub body to hub clutch and remove hub body from clutch.

(b) Remove large and small hub retaining rings.

(c) Remove hub clutch from axle shaft.

(7) Straighten lip of outer locknut retaining washer.

(8) Remove wheel bearing outer and inner locknuts and retaining washers using Tool J-6893.

(9) Remove rotor.

(10) Remove wheel bearings from rotor.

Installation

(1) Lubricate wheel bearings with EP-type, waterproof wheel bearing lubricant.

(2) Install wheel bearings and replacement grease seal in rotor.

(3) Install rotor.

(4) Install inner locknut using Tool J-6893.

NOTE: *The bearing adjuster inner locknut has a locating peg on one side. When installed, this peg must face away from the bearing.*

(5) Install wheel on rotor but do not tighten wheel nuts completely at this time.

(6) Tighten inner locknut to 50 foot-pounds (68 N•m) torque using Tool J-6893. Rotate wheel while tightening locknut to seat bearings uniformly.

(7) Back off inner locknut 1/6 turn (45°-65°) while rotating wheel.

(8) Install retaining washer and outer locknut.

NOTE: *Be sure the inner locknut locating peg is engaged in one of the retaining washer holes before installing the outer locknut.*

(9) Tighten outer locknut to minimum of 50 foot-pounds torque (68 N•m) using Tool J-6893.

(10) On models without front hub:

(a) Install pressure spring cup.

CAUTION: *The spring cup must be installed so the recessed side of the cup faces the outboard bearing and the flat side of the cup faces the pressure spring.*

(b) Install pressure spring, drive gear and snap ring.

(c) Coat rim of chrome hub cap with Permatex Form-A-Gasket number 3 (or equivalent) and install cap in rotor hub.

(11) On models with front hubs:

(a) Install hub clutch on axle.

(b) Install large and small hub retaining rings.

(c) Install hub body on clutch and install socket head screws. Tighten screws to 30 inch-pounds (3 N•m) torque.

(12) Remove wheel and install caliper. Refer to

Brakeshoe Replacement—Cherokee-Wagoneer-Truck models.

(13) Reinstall wheel but do not tighten wheel nuts completely.

(14) Lower vehicle.

(15) Tighten wheel nuts to 75 foot-pounds (102 N•m) torque on Cherokee, Wagoneer and Truck. On 8400 GVW J-20 Truck, tighten nuts to 130 foot-pounds (176 N•m) torque.

(16) Install wheel cover, if equipped.

SPECIFICATIONS

General Specifications

Caliper Piston Diameter:	
CJ-Scrambler Models	2.6 inches (6.60 cm)
Cherokee-Wagoneer-Truck	2.94 inches (7.45 cm)
Minimum Rotor Thickness:	
CJ-Scrambler Models	0.815 inches (20.7 mm)
Cherokee-Wagoneer-Truck	1.215 inches (30.86 mm)
Rotor Diameter:	
CJ-Scrambler Models	11.7 inches (29.7 cm)
Cherokee-Wagoneer-J10 Truck	12.0 inches (30.48 cm)
J-20 Truck	12.5 inches (31.75 cm)
Rotor Hub-To-Bore Runout Limit	0.010 inches (0.25 mm)
Rotor Lateral Runout Limit	0.005 inches (0.12 mm)
Rotor Thickness Variation	0.001 inches (0.02 mm)

80395

Brake Size and Application Chart

Model	Master Cylinder Bore Diameter	Front Brakes		Rear Brakes		Power Brake Unit Type
		Brake Size And Type	Caliper Piston Diameter	Brake Size And Type	Wheel Cyl. Diameter	
CJ Scrambler	1.00 (25.4 mm)	11.7 Disc. (29.7 cm)	2.6 Single Piston (6.60 cm)	10 x 1.75 Drum (25.4 x 4.44 cm)	.875 (22.2 mm)	8.00 Single Diaphragm (20.3 cm)
Cherokee Wagoneer	1.125 (28.5 mm)	12.0 Disc. (30.48 cm)	2.937 Single Piston (7.45 cm)	11 x 2 Drum (27.94 x 5.08 cm)	.937 (23.79 mm)	9 1/2 Single Diaphragm (24.13 cm)
J-10 Truck	1.125 (28.5 mm)	12.0 Disc. (30.48 cm)	2.937 Single Piston (7.45 cm)	11 x 2 Drum (27.94 x 5.08 cm)	.937 (23.79 mm)	9 1/2 Single Diaphragm (24.13 cm)
J-20 Truck 6800 GVW	1.125 (28.5 mm)	12.5 Disc. (31.75 cm)	2.937 Single Piston (7.45 cm)	12 x 2.5 Drum (30.48 x 6.35 cm)	1.125 (28.5 mm)	9 1/2 Tandem Diaphragm (24.13 cm)
J-20 Truck 7600 GVW	1.125 (28.5 mm)	12.5 Disc. (31.75 cm)	2.937 Single Piston (7.45 cm)	12 x 2.5 Drum (30.48 x 6.35 cm)	1.125 (28.5 mm)	9 1/2 Tandem Diaphragm (24.13 cm)
J-20 Truck 8400 GVW	1.125 (28.5 mm)	12.5 Disc. (31.75 cm)	2.937 Single Piston (7.45 cm)	12 x 2.5 Drum (30.48 x 6.35 cm)	1.125 (28.5 mm)	9 1/2 Tandem Diaphragm (24.13 cm)

41102

Torque Specifications

Service Set-To Torques should be used when assembling components. Service In-Use Recheck Torques should be used for checking a pre-tightened item.

	USA (ft-lbs)		Metric (N·m)	
	Service Set-To Torque	Service In-Use Recheck Torque	Service Set-To Torque	Service In-Use Recheck Torque
Caliper Brake Line Fitting	160 in-lbs.	150-170 in-lbs.	8	17-19
Brakeline-to-Caliper Bolt (Cke, Wag, Trk)	160 in-lbs.	120-200 in-lbs.	18	14-23
Bleeder Screw (1/4 - 28)	45 in-lbs.	40-50 in-lbs.	5	5-6
Bleeder Screw (3/8 - 24)	90 in-lbs.	40-140 in-lbs.	10	5-16
Brake Support Plate Mounting Bolts/Nuts (J-20 Trk)	50	45-55	68	61-75
Brake Support Plant Mounting Bolts/Nuts (Cke, Wag, J10 Trk)	45	35-55	61	47-75
Brake Support Plate Mounting Bolts/Nuts (CJ, Scrambler)	33	30-35	45	41-47
Caliper Anchor Bracket to Steering Knuckle (CJ, Scrambler)	100	90-110	136	122-149
Master Cylinder Mounting Bolts/Nuts	30	25-35	41	34-47
Master Cylinder-to-Power Unit Mounting Nuts	25	20-30	34	27-41

Torque Specifications (Continued)

Power Brake Unit-to-Dash Mounting Bolts/Nuts	22	18-25	30	24-34
Brake Line-to-Caliper Fitting Bolt (CJ, Scrambler)	25	20-30	34	27-41
Brake Line-to-Wheel Cylinder Fitting	160 in-lbs.	120-200 in-lbs.	18	14-23
Parking Brake Cable Clamp-to-Support Plate Bolts (5/16 - 18)	10	8-12	14	11-16
Wheel Nuts (CJ, Scrambler)	75	65-80	102	88-108
Wheel Nuts (Cke, Wag, Trk)	75	65-80	102	88-108
Wheel Nuts (8400) GVW Trk)	130	110-150	176	149-203
Brake Pedal-to-Power Unit Push Rod Bolt/Nut	35	25-40	47	34-54
Caliper Mounting Bolts (Cke, Wag, Trk)	35	30-40	47	41-54
Caliper Mounting Pins	30	25-35	40	34-47
Disc. Brake Shield Bolts (Cke, Wag, Trk)	8	5-10	11	7-14
Disc. Brake Shield Nuts (Cke, Wag, Trk)	35	30-40	47	41-54
Wheel Bearing Outer Locknut (All)	50 (min.)		68 (min.)	
Wheel Bearing Inner Locknut (Bearing Adjuster):				
CJ, Scrambler	Tighten to 50 ft-lbs. (68 N-m) and back off 1/6 turn while rotating wheel.			
Cke, Wag, Trk	Tighten to 50 ft-lbs. (68 N-m) and back off 1/6 turn while rotating wheel.			

All Torque values given in foot-pounds and newton meters with dry fits unless otherwise specified.

60647

Tools

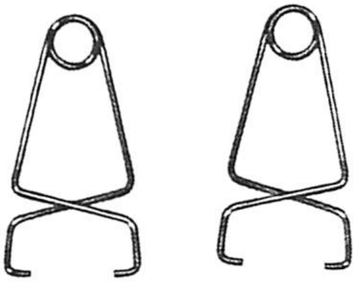

J-8002
WHEEL CYLINDER CLAMPS

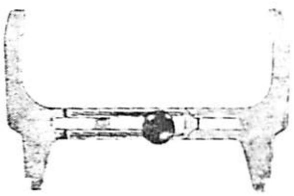

J-21177
DRUM BRAKE
CLEARANCE GAUGE

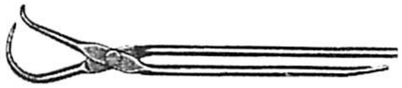

J-8057
BRAKE SPRING TOOL

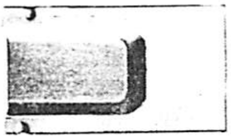

J-26869
METERING VALVE TOOL
(TYPE-W VALVE)

J-23709
METERING VALVE TOOL
(TYPE-D VALVE)

J-22904
DUST BOOT INSTALLER

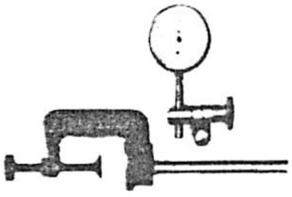

J-8001
DIAL INDICATOR SET

J-33028
DUST SEAL
INSTALLER

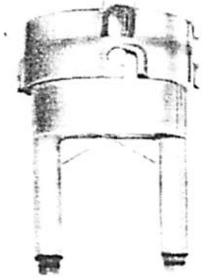

J-26819-24
BRAKE BLEEDER
ADAPTER

J-26819-30
BRAKE BLEEDER
EXTENSION

J-26819-25
BLEEDER ADAPTER
CLAMP

80397

NOTES

WHEELS AND TIRES 2H

INDEX

GENERAL

Jeep vehicles are equipped with American and metric size, tubeless-type, pneumatic tires available in load ranges SL, B, C, and D. Standard equipment tires are of bias-ply or bias-belted construction. Radial-ply tires are available as an option on most models.

Standard equipment wheels are safety rim, drop center-types constructed entirely of steel. Optional wheels, which are available on most models, consist of forged aluminum wheels, wide rim spoke-type sport wheels, and chrome-plated styled steel wheels.

Original equipment wheels and tires are tested and selected to provide the best all around performance for normal operation. To obtain optimum wheel/tire performance, tire inflation pressures must be maintained at recommended levels and wheel/tire condition should be checked regularly. This is especially important on vehicles equipped with the Quadra-Trac full-time four-wheel drive transfer case.

TIRE CONSTRUCTION

Three types of tire construction are currently in use. They are referred to as bias-ply, bias-belted, and radial-ply construction. The description for each construction-type is derived from the method used to position the tire cord plies in relation to the tread centerline.

Bias-Ply Construction

Bias-ply tires are constructed with the body cord plies extending from bead-to-bead and at an angle to the tread centerline (fig. 2H-1). Alternate plies overla another at opposing angles.

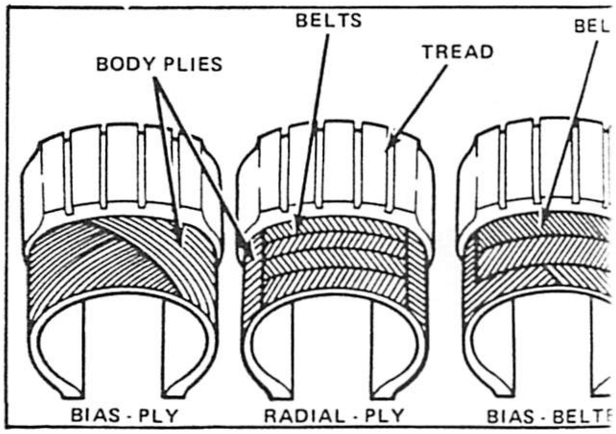

Fig. 2H-1 Types of Tire Construction

Bias-Belted Construction

Bias-belted tires are constructed basically the sa bias-ply tires. However, in addition to the angled cord plies, they also have belts that encircle the These belts are located under the tire tread and e from tread shoulder to tread shoulder (fig. 2H-1).

Radial-Ply Construction

Radial-ply tires, like bias-belted tires, also have under the tread which encircle the tire and extend tread shoulder to tread shoulder. However, these are constructed with the body cord plies at right angles to the tread centerline. The plies cross the tread centerline at an angle of approximately 90 degrees (fig. 2H-1). Because the body cord plies radiate from the tread centerline, this type of construction is designated radial-ply.

Identifying Tire-Types

Radial tires are identified by the code letter R which appears in the size description imprinted on the tire sidewall. Bias-ply and bias-belted tires do not have such a code letter. For example, P225/75R-15 or HR78-15 for radial tires as compared to H78-15 for similar size bias-ply or bias-belted tires.

NOTE: *As a result of their unique construction, radial tires have a highly flexible sidewall. This flexibility is responsible for the characteristic sidewall "bulge" which makes the tire appear to be underinflated. This is a normal condition for radial tires. Do not attempt to reduce this bulge by overinflating the tire. The only way to be sure a tire is properly inflated is to use an accurate and reliable tire pressure gauge. Check and adjust inflation pressures in accordance with the information provided in the Tire Inflation Pressure Chart at the end of this chapter.*

TIRE SIZE AND LOAD RATING

American and metric tire sizes and tire load range ratings are indicated in the combination of letters and numbers imprinted on the tire sidewall such as: P225/75R-15 load range SL, H78-15 load range B, G78-15 load range D and 9.50-16.5 load range D. The load range rating replaces the ply rating system formerly used to denote tire load capacity. Original equipment tires used on Jeep vehicles are available in load range ratings SL, B, C, and D.

NOTE: *The SL load range rating applied to the P225/75R-15 metric tire is equivalent to the current load range B rating.*

Conventional size American tires are identified with numbers only such as 9.50-16.5. These numbers indicate approximate tire width and rim diameter in inches. For example, 9.50 represents tire sidewall-to-sidewall width and 16.5 the nominal wheel rim diameter required.

The newer American tire sizes are based on tire profile ratio and use letter-number combinations such as H78-15. In this case, letter H represents tire industry specifications for the load and inflation schedule for tires in this letter classification. The number 78 indicates tire section height as determined by the ratio of section height to sidewall-to-sidewall width. Or, height divided by width equals size or profile ratio. In this case, the height of an H78 tire is equal to 78 percent of the width. This formula applies to all profile series tires (fig. 2H-2). The number 15 denotes the wheel rim diameter required.

Metric size tires also use letter-number combinations to indicate size and type. For example, with the P225/75R-15 tire, letter P indicates tire use is for passenger vehicle applications, 225 is the sidewall-to-sidewall width in millimeters, 75 is the profile ratio (height equals 75% of width), R indicates radial-ply construction and 15 the wheel rim diameter required stated in inches.

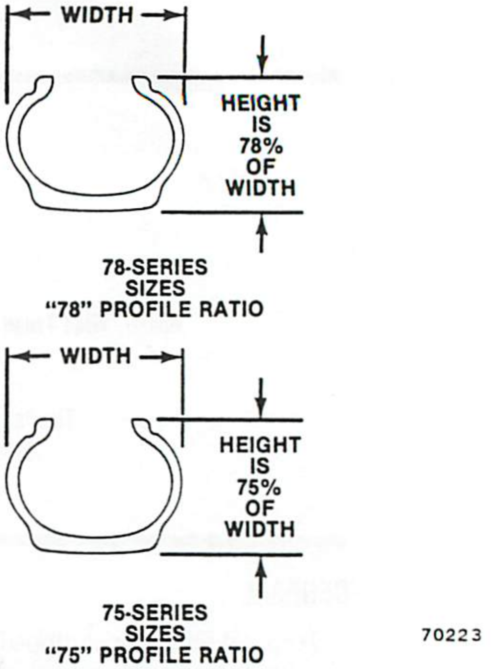

Fig. 2H-2 Tire Size and Profile Ratio

TIRE INFLATION PRESSURE AND CAPACITY

Original equipment tires used on Jeep vehicles are selected and tested to meet operating requirements within tire capacity. The recommended load capacities and inflation pressures for full or reduced load operation are listed in the Tire Inflation Pressure Chart at the end of this chapter. This information is also provided in the owners manual and on a label attached to the interior surface of the glove box door.

Tire inflation pressures are selected to be compatible with the load capacity, ride, and handling characteristics of a specific vehicle. In cases where a slightly softer ride is preferred, the driver may use reduced load pressures but must not exceed 55 mph (88 km/h) or reduced load vehicle capacity.

When sustained high speed operation is anticipated, tires may be inflated to recommended full load inflation pressures plus an additional 2 psi (14 kPa). However, inflation pressures must not exceed maximum recommended pressures.

Tire pressures should be checked and adjusted to recommended levels on a weekly basis. This is especially important when extreme changes of 20 degrees or more in average seasonal temperatures occur and is especially important on vehicles with Quadra-Trac.

Adjusting Inflation Pressures

Check and adjust inflation pressures only when the tires are cold, or driven for less than two miles at speeds below 40 mph (64 km/h), or after the vehicle has been parked for three hours or more.

Do not reduce inflation pressures if the tires are hot, or driven over two miles at speeds above 40 mph (64 km/h). At this stage, tire pressures may increase as much as 6 psi over cold inflation pressures due to air expansion caused by heat buildup in the tire.

When checking and adjusting inflation pressures, always use a reliable and accurate gauge to ensure proper inflation levels.

ABNORMAL TIRE WEAR

Abnormal tire wear may be caused by incorrect inflation pressures, tire-wheel unbalance, worn suspension components, improper brake operation, bent wheels, front wheel alignment, or excessive speed on turns.

In most cases, inspection of tire wear patterns will reveal the cause of abnormal wear. The various types of wear patterns and necessary corrective action are illustrated in figure 2H-3.

Rapid wear of the tread shoulders is usually caused by underinflation or lack of rotation or a combination of both. If this type of wear occurs and the tires are serviceable, rotate the tires and inflate them to recommended levels when they are cool.

Rapid wear at the tread center is usually caused by overinflation or lack of rotation or a combination of both. If this type of wear occurs and the tires are still serviceable, rotate the tires and inflate them to recommended levels when they are cool.

Cracked treads are usually caused by underinflation or excessive high speed operation or a combination of both. Tires with cracked treads should be replaced and the replacement tires properly maintained to avoid a recurrence.

Excessive wear of one tread shoulder may be caused by excessive speed on turns or by incorrect camber. Incorrect negative camber will wear the inboard tire shoulder while incorrect positive camber will wear the outboard shoulder. If this type of wear occurs, check camber. If camber is incorrect, the front axle housing may need to be replaced. If camber is within specified limits, caution the owner about excessive speed on turns. If the tires are serviceable, rotate them and adjust inflation pressures to recommended levels.

Incorrect toe-in will cause the tire tread surface to develop a feathered edge. One side of the tread will be rounded while the opposite side develops a feathered edge. This type of wear indicates that the tire is side slipping and scuffing as it moves over the road surface.

A feathered edge that faces toward the vehicle indicates excessive toe-in. A feathered edge that faces away from the vehicle indicates excessive toe-out. The direction in which a feathered edge has developed can be determined by passing a hand over the tire tread surface. Bent steering knuckle arms can also cause this type of wear.

If a feathered edge develops, check and correct toe-in as necessary and rotate the tires if they are serviceable.

	RAPID WEAR AT SHOULDERS	RAPID WEAR AT CENTER	CRACKED TREADS	WEAR ON ONE SIDE	FEATHERED EDGE	BALD SPOTS	SCALLOPED WEAR
CONDITION	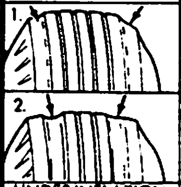	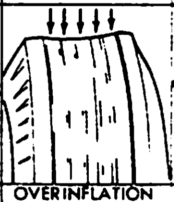	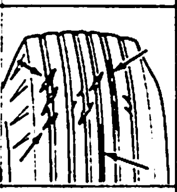	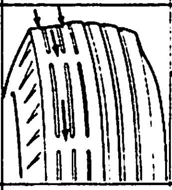	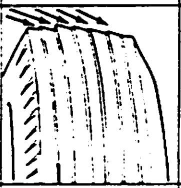	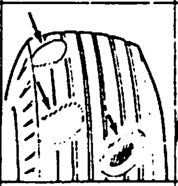	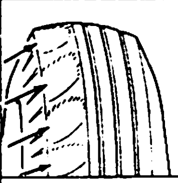
CAUSE	UNDERINFLATION OR LACK OF ROTATION 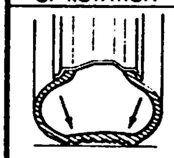	OVERINFLATION OR LACK OF ROTATION 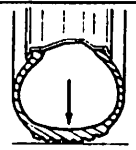	UNDERINFLATION OR EXCESSIVE SPEED	EXCESSIVE CAMBER 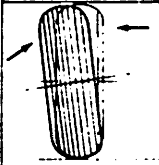	INCORRECT TOE 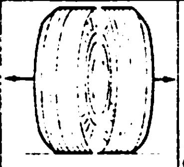	UNBALANCED WHEEL 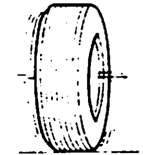 OR TIRE DEFECT	LACK OF ROTATION OR WORN OR OUT-OF-ALIGNMENT SUSPENSION
CORRECTION	ADJUST PRESSURE TO SPECIFICATIONS WHEN TIRES ARE COOL ROTATE TIRES		REPLACE TIRES	REPLACE FRONT AXLE HOUSING IF NECESSARY	ADJUST TOE-IN TO SPECIFICATIONS	DYNAMIC OR STATIC BALANCE WHEELS	ROTATE TIRES AND INSPECT SUSPENSION

Fig. 2H-3 Tire Wear Patterns

Wide Tread Bias-Belted Tire Wear

Bias-belted wide tread tires have an initial wear characteristic that is unique to this type of tire. It occurs as a fairly rapid but even wear of the second and sixth tread ribs (fig. 2H-4). Wear may occur at only one of the ribs or at both ribs simultaneously. In some cases, a slight cupping of these ribs may also develop in addition to wear. Although wear develops rapidly, the degree of wear is relatively light.

This wear characteristic is a normal condition with wide tread bias-belted tires and is related to the tread deflection properties of these tires. When the tread is pressed against the road surface, all tread ribs do not support equal portions of weight. The outer and center ribs support the most weight while the second and sixth ribs support the least. Because of the lighter load on the second and sixth ribs, they are able to deflect more and tend to slip and scrub slightly as the tire rotates. This action causes more wear on these ribs.

Wear on the second and sixth ribs cannot be reduced by over or underinflating the tires. Maximum benefit in minimizing wear is obtained only by adhering to the specifications recommended for tire inflation pressures, tire rotation, and front wheel alignment.

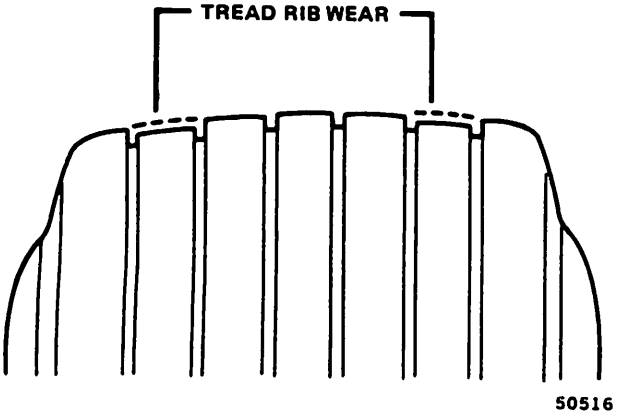

Fig. 2H-4 Wide Tread Bias-Belted Tire Wear

TIRE MAINTENANCE AND CONDITION

To maximize tire performance, inspect tires frequently for signs of incorrect inflation and uneven wear which may indicate a need for balancing, rotation, or alignment. Tires should also be inspected frequently for cuts, abrasions, stone bruises, blisters, or for objects imbedded in the tire. Weekly inspection intervals are recommended as a minimum. More frequent inspections are recommended when extreme temperature changes occur or where road surfaces are rough or occasionally littered with debris.

As a further check of tire condition, tread wear indicators are molded into the bottom of the tread grooves. These indicators appear in the form of 1/2 inch (13 mm) wide bands across the tread when it has worn to a thickness of 1/16 inch (1.58 mm) or less (fig. 2H-5). The tire should be replaced when these bands become visible.

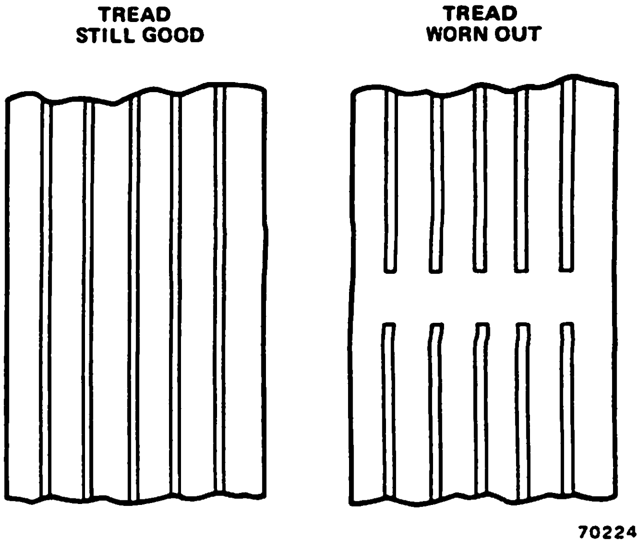

Fig. 2H-5 Tread Wear Indicators

A number of states have statutes concerning minimum permissable tread depths and use these indicators as the tire wear limit.

Clean tires using a mild soap and water solution only and rinse thoroughly with water. Do not use caustic solutions or abrasive materials. To clean white sidewalls and raised letters and numbers, use an approved whitewall cleaner only. Do not use steel wool, wire brushes, or materials having a mineral oil base such as gasoline, paint thinner, or turpentine. These materials are harmful to the tires and will also discolor the white sidewalls and raised figures.

TIRE REPAIR

Punctured tires should be removed from the wheel and permanently repaired from the inside using a combination repair plug and vulcanized patch. When repairing punctures, always follow the manufacturers instructions for repair kit installation.

Punctures in the tread area only are repairable (fig. 2H-6). Never attempt to repair punctures in the tire

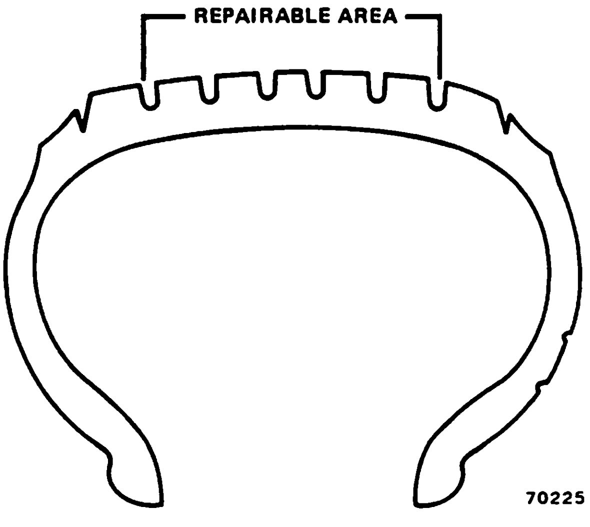

Fig. 2H-6 Tire Repair Area

shoulders or sidewalls. In addition, never attempt to repair any tire that has sustained the following damage:

- Bulges or blisters
- Ply separations
- Broken, cut, or cracked beads
- Fabric cracks or cuts
- Tires worn to the fabric or if wear indicators are visible
- Punctures larger than 1/4 inch (6 mm) in diameter

Externally applied repair plugs, blowout patches, and aerosol sealants should be considered as emergency-type repairs only. Tires repaired in this fashion should not be driven at speeds over 40 mph (64 km/h) or for more than 75 miles (121 km) before permanent repair is made.

TIRE ROTATION

To equalize wear, tires should be rotated at the intervals specified in the Mechanical Maintenance Schedule. The first rotation is the most important in setting the stage for even tread wear. After rotation, adjust tire inflation pressures to the levels recommended in the Tire Inflation Pressure Chart.

Radial tires are not rotated in the same manner as conventional tires. Conventional tires are rotated in a crossing pattern. Radial tires are rotated on the same side, front-to-rear (fig. 2H-7).

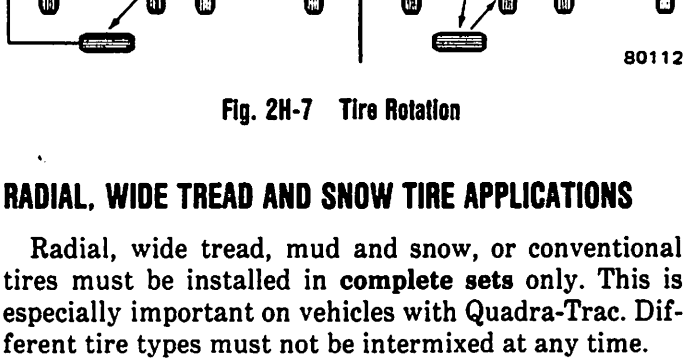

Fig. 2H-7 Tire Rotation

RADIAL, WIDE TREAD AND SNOW TIRE APPLICATIONS

Radial, wide tread, mud and snow, or conventional tires must be installed in **complete sets** only. This is especially important on vehicles with Quadra-Trac. Different tire types must not be intermixed at any time.

CAUTION: *Tires installed on Jeep four-wheel drive vehicles must all be of equal circumference to maintain satisfactory operation. They must also be the same size, tread pattern, make, construction, and inflation pressure. Intermixing tires of different size or construction will cause unusual handling, noisy operation, and accelerated wear of driveline components.*

Wide tread tires must be installed in complete sets and only when there is adequate clearance for the tire in the wheel well. Refer to the Tire Inflation Pressure Chart for tire sizes allowable on each model.

Radial tires must never be intermixed with bias-ply or bias-belted tires on any vehicle. Intermixing these tires will produce an adverse effect on vehicle handling and cornering stability. In an emergency situation, tires may be intermixed but only for the duration of the emergency and only if vehicle speed is kept below 40 mph (64 km/h).

Mud and snow tires must not be intermixed with conventional tread tires on any vehicle. These tires must also be of the same size, tread pattern, make, construction, and inflation pressure. In addition, never mix bias-ply or bias-belted snow tires with radial-ply mud or snow tires.

POLYSPARE TIRE

The Polyspare lightweight spare tire is optionally available on CJ and Scrambler models and standard equipment on Cherokee and Wagoneer models and J-10 trucks is designed for emergency use only. Operation of the tire at speeds over 50 mph (80 km/h) and travel in excess of 100 continuous miles (160 km) is not recommended.

The Polyspare tire is mounted on a standard type 15 x 6-inch steel wheel. Correct inflation pressure is 32 psi (221 kPa) and the tire can be inflated with conventional inflation equipment. Installation and removal of Polyspare does not require special tools and the anticipated tread life is approximately 3,000 miles (4 800 km).

WHEELS

The standard equipment wheels used on Jeep vehicles are safety rim, drop center, J-type wheels of all-steel construction. Optional wheels include chrome-plated styled steel wheels, wide rim spoke-type steel wheels, and forged aluminum wheels.

Steel wheels are of two-piece construction consisting of a rim and center section (spider). The two sections are welded together to form a seamless, air-tight assembly.

WHEEL MAINTENANCE AND CONDITION

Wheel condition should be checked frequently. Replace any wheel that is cracked, bent, severely dented, has excessive runout, or has broken welds. The tire inflation valve should also be inspected frequently for wear, leaks, cuts, or looseness and should be replaced if damaged or worn.

Clean all wheels with a mild soap and water solution only and rinse thoroughly with water. Never use abrasive or caustic materials, especially on aluminum or chrome plated wheels as the surface will be etched or the plating severely damaged. After cleaning aluminum or chrome plated wheels, apply a coating of protective wax to preserve the finish and lustre.

WHEEL BALANCING

Wheel balancing may be performed using on or off-vehicle equipment. However, when using on-vehicle balancing equipment, observe the following precautions:

- On vehicles with a Trac-Lok rear axle, do not use on-vehicle equipment to balance the rear wheels. Instead, remove the wheels and balance them off the vehicle using a two-plane, dynamic balancer.
- On vehicles with front hubs, place the hubs in the 4 x 2 or Free position before balancing front wheels.
- Before balancing wheels on a vehicle equipped with a Model 208 or 300 transfer case, shift the transmission and transfer case into neutral.
- Before balancing wheels on a vehicle equipped with a Quadra-Trac Model 219 transfer case, disconnect the front or rear propeller shafts as required.

Because of their unique construction, radial tires are sometimes less responsive to certain balancing techniques. In some cases, dynamic two-plane, off-vehicle type balancing equipment will provide the most satisfactory results with radial tires.

When balancing aluminum or chrome plated wheels, take care to avoid damaging the wheel surface when installing balance weights. Use self-adhering type weights on aluminum wheels only and install them on the back side of the wheel whenever possible.

WHEEL BEARING ADJUSTMENT

Wheel bearing adjustment is very important because it establishes the operating clearance of the wheel bearings. A tight adjustment preloads the bearings excessively causing them to overheat. A loose adjustment allows the hub to shift position as bearing load varies during acceleration, braking, and cornering. A loose bearing adjustment can produce shimmy, vibration, and low brake pedal heights as a result of disc brakeshoe knock back caused by rotor wobble.

Front Wheel Bearing *Adjustment*—CJ and Scrambler Models

(1) Raise vehicle.

(2) Remove bolts attaching front hub to rotor hub and remove hub body and gasket.

(3) Remove snap ring from axle shaft and remove hub clutch assembly.

(4) Straighten lip of outer locknut tabbed washer (fig. 2H-8).

(5) Remove outer locknut and tabbed washer.

(6) Loosen, then tighten inner locknut to 50 foot-pounds (68 N•m) torque using Tool J-25103. Rotate wheel while tightening nut to seat bearing properly.

(7) Back off inner locknut 1/6 turn (45°-65°) while rotating wheel. Wheel must rotate freely and not display any lateral movement.

(8) Install tabbed washer and outer locknut.

(9) Tighten outer locknut to 50 foot-pounds (68 N•m) torque using Tool J-25103 and bend lip of tabbed washer over locknut.

(10) Recheck bearing adjustment. Wheel must rotate freely and not display any lateral movement.

(11) Install hub clutch assembly on axle shaft.

(12) Install snap ring on axle shaft.

(13) Install gasket and hub body. Tighten hub bolts to 30 foot-pounds (41 N•m) torque.

(14) Lower vehicle.

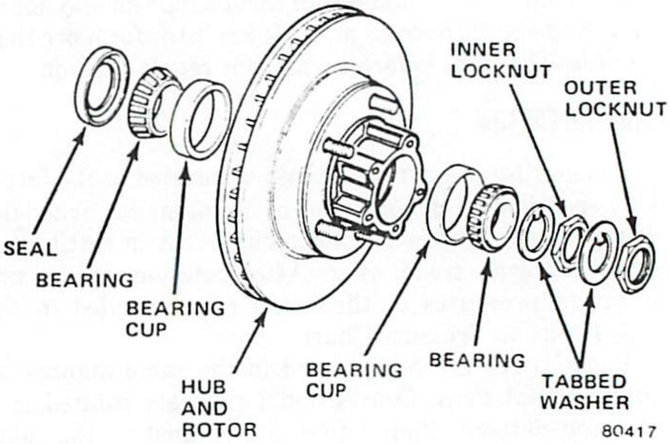

Fig. 2H-8 Rotor and Wheel Bearings—CJ and Scrambler Models

Front Wheel Bearing Adjustment—Cherokee-Wagoneer-Truck

(1) Raise vehicle.

(2) On models without front hubs:

(a) Remove wheel cover and hubcap.

(b) Remove drive gear snap ring (fig. 2H-9).

(c) Remove drive gear, pressure spring, and spring cup (fig. 2H-9).

(3) On models with front hubs:

(a) Remove socket head screws from hub body and remove body from hub clutch assembly.

(b) Remove large retaining ring from hub. Remove small retaining ring from axle shaft.

(c) Remove hub clutch assembly.

(4) Remove outer locknut and lockwasher (fig. 2H-9).

(5) Seat bearings by loosening, then tightening inner locknut to 50 foot-pounds (68 N•m) torque using Tool J-6893. Rotate wheel while tightening locknut to seat bearings uniformly.

(6) Back off inner locknut 1/6 turn (45°-65°) while rotating wheel.

(7) Install lockwasher. Align one of lockwasher holes with peg on inner locknut and install washer on nut.

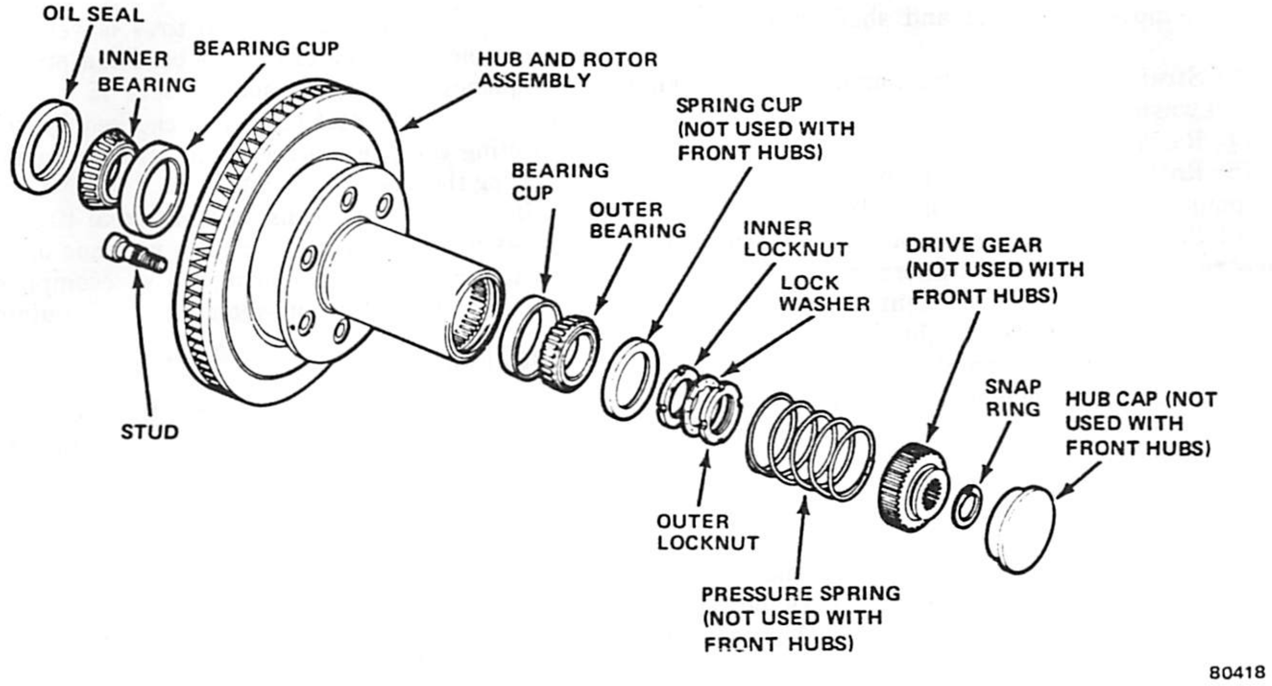

Fig. 2H-9 Rotor and Wheel Bearings—Cherokee-Wagoneer-Truck

(8) Install outer locknut. Tighten outer locknut to minimum of 50 foot-pounds (68 N•m) torque using Tool J-6893.

(9) Recheck bearing adjustment. Wheel must rotate freely and not display any lateral movement.

(10) On models without front hubs:

(a) Install spring cup and pressure spring.

CAUTION: *The spring cup must be installed so the recessed side faces the bearing and the flat side faces the pressure spring. The pressure spring should contact the flat side of the cup only.*

(b) Install drive gear and drive gear snap ring.

(c) Coat hubcap rim with Permatex Form-A-Gasket No. 3, or equivalent and install hubcap.

(11) On models with front hubs:

(a) Install hub clutch assembly.

(b) Install small retaining ring on axle shaft. Install large retaining ring on hub.

(c) Install hub body on hub clutch.

(d) Install socket head screws in hub. Tighten screws to 30 inch-pounds (3 N•m) torque.

(12) Lower vehicle.

Rear Wheel Bearing Adjustment

AMC/Jeep Rear Axle

The wheel bearings used in Cherokee, Wagoneer and J-10 Truck models do not require adjustment. The shafts used in these axle models are equipped with tapered roller bearings which are capable of accepting lateral thrust in either direction. However, the tapered axle shafts used in CJ and Scrambler models (AMC/Jeep axle) do require correct axle shaft end play to maintain proper bearing operating clearances. Refer to Chapter 2F—Axles for end play measurement and adjustment procedures.

Model 60 Full-Floating Rear Axle

(1) Remove axle shaft attaching bolts, lockwashers, and cone washers (fig. 2H-10).

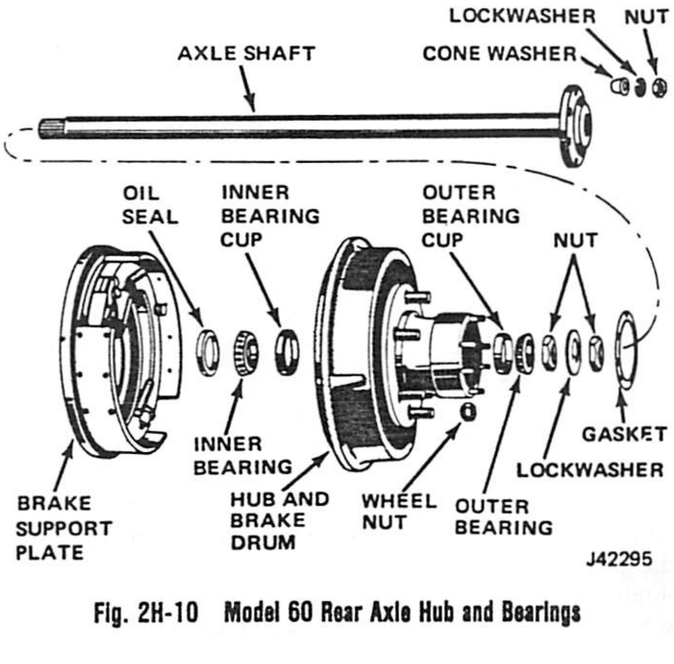

Fig. 2H-10 Model 60 Rear Axle Hub and Bearings

(2) Remove axle shaft and shaft gasket. Discard gasket.

(3) Straighten lip of lockwasher and remove locknut and lockwasher.

(4) Raise vehicle.

(5) Rotate wheel and tighten adjusting nut to 50 foot-pounds (68 N•m) torque using Tool J-25106.

(6) Back off adjusting nut about 1/6-turn or until wheel rotates freely without lateral movement.

(7) Install and tighten locknut to 50 foot-pounds (68 N•m) torque and bend lockwasher lip over locknut.

(8) Check adjustment and correct if necessary.

(9) Install replacement axle shaft gasket and axle shaft. Install cone washers, lockwashers, and bolts.

(10) Lower vehicle.

TIRE ROUGHNESS

Roughness, vibration, tramp, shimmy, and thump are usually caused by excessive wheel or tire runout, cupped tires, or wheel/tire unbalance. These problem conditions may also be caused by operation over rough or undulating road surfaces. Driving the vehicle on different road surfaces will usually help determine if the road surfaces or tires are causing the problem.

Always road test the vehicle to determine the exact nature of the problem. Drive the vehicle for at least 7 miles (11 km) to warm the tires and remove temporary flat spots that may have formed while the vehicle was parked. Note tire condition and wear and check and adjust inflation pressures to recommended levels before road testing.

Radial Tire Performance Characteristics

As a result of their unique construction, radial tires produce ride, handling, and appearance characteristics that are noticeably different from conventional tires.

The low speed ride quality or feel of radial tires may seem harsh when compared to conventional tires. This is a normal characteristic and is due to the stiff belts used in radial tire construction. Harshness often leads to the assumption that the tires are overinflated. Do not underinflate radial tires in an attempt to correct this condition. Inflate radial tires to recommended levels only.

Because radial tire body plies are positioned at a 90 degree angle to the tread centerline, they have highly flexible sidewalls. It is this flexibility which produces a characteristic sidewall bulge making the tire appear underinflated. This is a normal condition. Do not attempt to reduce this bulge by overinflating the tire. Check inflation pressure using an accurate gauge and inflate radial tires to recommended levels only.

At speeds of 15 mph (24 km/h) or less, radial tires may generate a side-to-side or waddle motion. This motion is a normal radial tire characteristic and is due to the highly flexible sidewall. An objectionable waddle condition can be reduced only by rotating the tires. Wheel balancing will not alleviate this condition.

Proper mounting of radial tires is very important. Incomplete seating of the tire bead can produce a high frequency vibration at speeds above 45 mph (72 km/h). Improper bead seating can be checked by visually inspecting the tire. Correction involves removing and reseating the tire on the wheel.

Because of their construction, radial tires are sometimes less responsive to certain methods of wheel balancing. Radial tire balancing is best accomplished using dynamic, two-plane, off-vehicle balance equipment.

Tire Thump

Thump noise is caused by the tire moving over irregularities in the road or by irregularities in the tire itself. The sound coincides with each wheel revolution.

To determine which tire is causing thump, inflate all tires to 45 psi (310 kPa) temporarily and drive over the same roads. If thump stops, reduce the pressure in one tire at a time and repeat the road test. Perform this procedure until all tires have been tested and each test is made with three tires at high pressure and one tire at recommended pressure. When thump develops again, the tire just reduced to normal inflation pressure is the problem tire.

NOTE: *Although the procedure for diagnosing thump is usually effective with conventional tires, it is considerably less effective with radial tires.*

Tire Tramp

Tramp is caused by wheel/tire static unbalance or by excessive lateral runout of the tire or wheel.

The most effective method for checking static balance is by using off-vehicle balancing equipment.

Static balance is the result of an equal distribution of wheel and tire weight about the circumference of the tire. In this case, weight is distributed about the spindle in such a manner that the assembly lacks the tendency to rotate by itself when mounted on the arbor of a balancing machine.

Static unbalance occurs when an unequal portion of weight is concentrated at one point on the tire and wheel (fig. 2H-11). It causes a vibratory-type pounding action which is referred to as tramp or hop.

Dynamic balance is the result of an equal distribution of wheel/tire weight around the plane of rotation (fig. 2H-12). This causes the wheel to rotate smoothly about the axis that bisects the wheel and tire centerline.

Dynamic unbalance occurs when unequal forces are concentrated at opposing points on the tire circumference. It will cause shimmy and vibration at medium and high speeds (fig. 2H-12).

The most effective method for balancing wheels and tires is by using equipment that will correct both static and dynamic balance. Dynamic, two-plane balancing equipment is preferable.

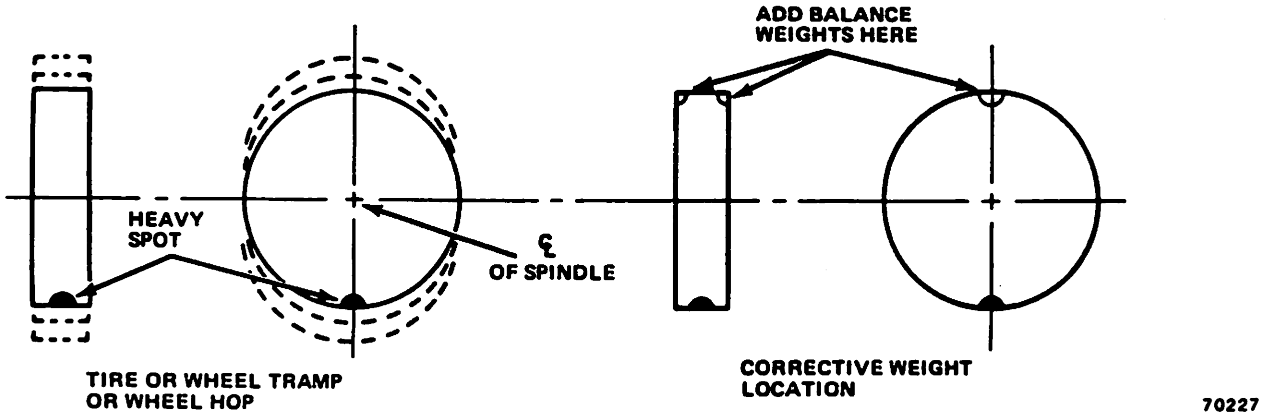

Fig. 2H-11 Static Unbalance

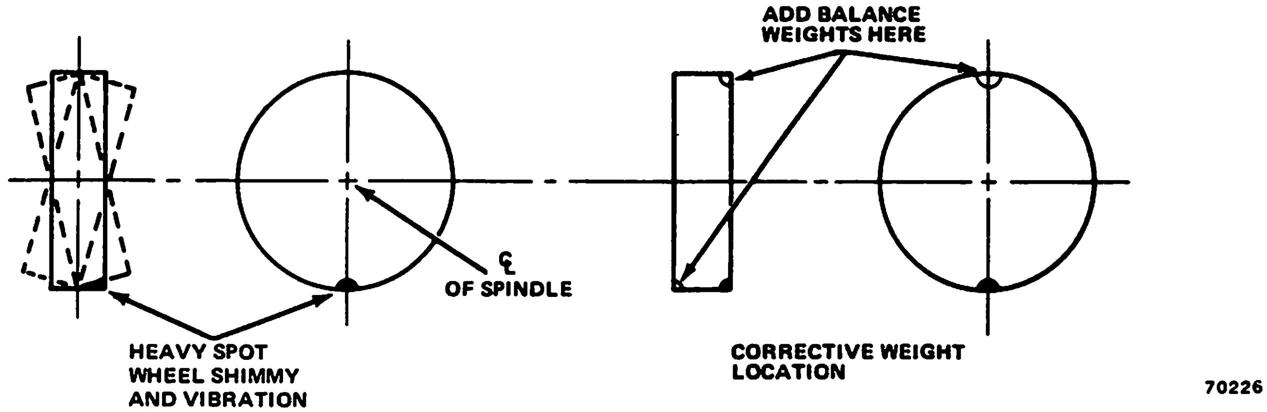

Fig. 2H-12 Dynamic Unbalance

Since procedures vary with different machines, follow the equipment manufacturers operating instructions explicitly to obtain satisfactory results.

WARNING: *On-vehicle type wheel balancers may be used on the rear wheels of vehicles equipped with a Trac-Lok differential, but only after raising the rear end and removing the wheel opposite the one being balanced. In addition, do not exceed 35 mph (56 km/h) on the speedometer when spinning wheels. As a result of differential action, actual wheel speed is double the speed indicated on the vehicle speedometer. The centrifugal force generated by a tire spinning at high speed could cause damage and personal injury.*

Wheel and Tire Runout

Excessive radial or lateral runout of a wheel or tire can cause roughness, vibration, tramp, tire wear, and steering wheel tremor.

Before checking runout, drive the vehicle for at least 7 miles to remove temporary flat spots that may have formed in the tires. Flat spots must be removed to avoid false readings when measuring runout.

Measure runout using a dial indicator. All measurements should be made on the vehicle with the tires inflated to recommended levels and with the wheel bearings adjusted to specifications.

Measure radial runout at the center and outside ribs of the tread face (fig. 2H-13). Measure lateral runout at the tire sidewall just above the buffing rib on the sidewall (fig. 2H-13).

On conventional tires, radial runout should not exceed 0.105 inch (2.66 mm) and lateral runout should not exceed 0.080 inch (2.03 mm). Mark the high points of lateral or radial runout for reference.

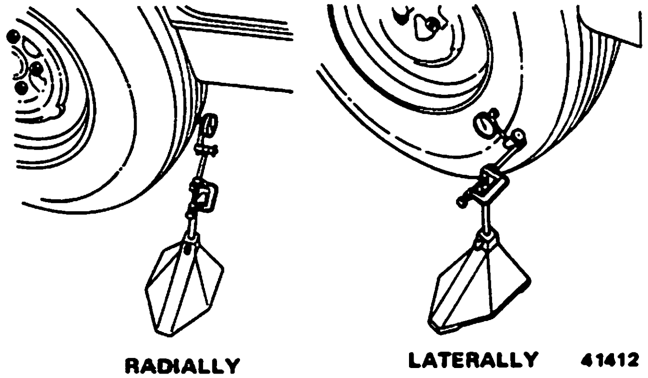

Fig. 2H-13 Measuring Tire Runout

On radial tires, radial runout should not exceed 0.080 inch (2.03 mm) and lateral runout should not exceed 0.100 inch (2.54 mm).

If the tire radial or lateral runout exceeds specified limits, it will be necessary to check wheel runout to determine whether the wheel or tire is at fault.

Wheel radial runout is measured at the wheel rim just inside of the wheel cover retaining nibs (fig. 2H-14). Wheel lateral runout is measured at the wheel rim bead flange just inside the curved lip of the flange (fig. 2H-14). Mark the high points of radial or lateral runout for reference.

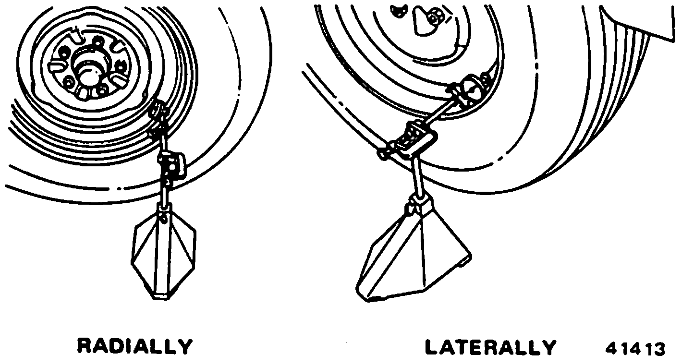

Fig. 2H-14 Measuring Wheel Runout

Wheel radial runout should not exceed 0.035 inch (0.88 mm). Wheel lateral runout should not exceed 0.045 inch (1.14 mm).

If tire runout exceeds specified limits but wheel runout is within limits, runout may be reduced to an acceptable level by changing tire position on the wheel so that the previously marked high points are 180 degrees apart.

NOTE: *On vehicles with disc brakes, excessive wheel lateral runout may be caused by excessive rotor hub-to-bore runout. Refer to the Rotor Inspection procedure in Chapter 2G.*

VIBRATION

Vibration may be caused by tire and wheel unbalance or runout, incorrect wheel bearing adjustment, loose or worn suspension or steering components, worn or defective tires, certain tire tread patterns, incorrect universal joint angles, worn universal joints, excessive propeller shaft runout or yoke runout, rotor or brakedrum runout, loose engine or transmission supports, or by engine operated accessories.

Vibration Types

There are two types of vibration which are referred to as mechanical and audible.

Mechanical vibrations are felt through the seats, floorpan, or steering wheel and usually produce some visible motion in the rear view mirror, fenders, dash panel, or steering wheel.

Audible vibrations are heard or sensed above normal background noise and may or may not be accompanied by a mechanical vibration. In some cases, they occur as a droning or drumming noise while in other cases they produce a buffeting sensation that is felt or sensed by the driver rather than heard.

Vibration Sensitivity

Mechanical and audible vibrations are sensitive to changes in engine torque, vehicle speed, or engine speed. They usually occur within one, or sometimes two well-defined ranges in terms of vehicle speed, engine rpm, and torque application.

Torque Sensitive

This means that the condition can be improved or worsened by accelerating, decelerating, coasting, or maintaining a steady vehicle speed and application of engine torque.

Vehicle Speed Sensitive

This means that the vibration occurs at the same speed and is not affected by engine torque, engine rpm, or transmission gear selected.

Engine Speed Sensitive

This means that the vibration occurs at varying vehicle speeds when a different transmission gear is selected. It can sometimes be isolated by increasing or decreasing engine speed with the transmission in neutral.

Vibration Diagnosis

A proper vibration diagnosis should always begin with a road test. Corrective measures should not be attempted until the vibration type, magnitude, and speed range have been established by a road test.

Road Test

During the road test, drive the vehicle on a road that is smooth and free of undulations. If vibration is apparent, note and record the following:

- The speed range in which vibration occurs
- The type of vibration—mechanical or audible
- If the vibration is affected by changes in vehicle speed, engine rpm, or engine torque
- Determine the vibration sensitivity—torque sensitive, engine speed sensitive, or vehicle speed sensitive

Diagnosis Procedure

When the vibration type, sensitivity, and range has been determined, refer to the Vibration Diagnosis Chart for probable causes.

Consider correcting only those items coded on the charts that are related to the problem condition.

Refer to the following correction codes for a description of the various corrective procedures.

Vibration Diagnosis Chart Codes

TRR—Tire and Wheel Radial Runout. Vehicle speed sensitive mechanical vibration. Not a cause of vibration below 20 mph. Speed required to cause vibration increases as runout decreases.

WH—Wheel Hop. Vehicle speed sensitive mechanical vibration. Not a cause of vibration below 20 mph (32 km/h). Generates rapid up-down movement in steering wheel and dash panel. Most noticeable in 20 to 40 mph (32 to 64 km/h) speed range. Caused by tires having radial runout of more than 0.045 inch (1.14 mm). Balancing ineffective, faulty tire should be replaced.

TB—Tire Balance. Vehicle speed sensitive mechanical vibration. Static unbalance not a cause of vibration below 30 mph (46 km/h). Dynamic unbalance not a cause of vibration below 40 mph (64 km/h).

TLR—Tire and Wheel Lateral Runout. Vehicle speed sensitive mechanical vibration. Not a cause of vibration below 50 to 55 mph (80 to 88 km/h) unless runout is extreme. Generates front end shimmy if extreme.

TW—Tire Wear. Vehicle speed sensitive mechanical vibration. Abnormal wear causes vibration in 30 to 55 mph (50 to 88 km/h) range and may generate whine noise at high speed changing to growl noise at low speed.

W—Radial Tire Waddle. Normal condition with radial tires. Construction causes side-to-side motion at speeds up to 15 mph. Rotate tires to reduce condition. Replace tires if condition is extremely severe.

UJA—Universal Joint Angles. Incorrect angles cause mechanical vibration below 20 mph (32 km/h) changing to mechanical and/or audible vibration at 35 to 55 mph (56 to 88 km/h). Torque sensitive vibration.

UJ—Universal Joints. If needle bearings, bearing cups, or bearing ends of spiders are worn, damaged, overtightened, or loose, they will cause mechanical vibration at almost any speed. Torque and vehicle speed sensitive vibration.

PSY—Propeller Shaft and Yokes. Not a cause of vibration below 35 mph (56 km/h). Excessive runout, unbalance, missing balance weights, undercoating on shaft tube, dents or bends in tube will cause mechanical vibration at 35 mph (56 km/h) *and* above. Torque and vehicle speed sensitive vibration.

WB—Wheel Bearings. Loose bearings cause shimmy-like vehicle speed sensitive mechanical vibration at 35 mph (56 km/h) and above. Rough or damaged bearings will also generate growl noise at low speed or whine noise at high speed.

AN—Axle Noise. Axle not a cause of vibration unless axle shaft is bent or front axle shaft U-Joint is damaged. Worn or damaged axle gears or bearings will cause noise in varying speed ranges in relation to amount of engine torque applied.

SSC—Suspension and Steering Components. Worn, damaged, or loose suspension components (steering damper, steering knuckles, pitman arm, springs, spring U-bolts or center bolts, shocks, tie rod ends, etc.) can cause mechanical or audible vibrations at many speeds. Can be torque and vehicle speed sensitive.

EA—Engine Driven Accessories. Loose or broken AC compressor, power steering pump, water pump, air pump, alternator, etc. can cause engine speed sensitive mechanical vibration. Usually apparent when transmission is shifted into neutral and engine rpm increased.

ADB—Accessory Drive Belts. Loose, worn belts can cause engine speed sensitive audible vibration that sounds like droning, fluttering, or rumbling noise.

DEM—Damaged Engine or Transmission Mounts. If loose, worn, or broken can allow engine, transmission, or engine accessories to contact body causing noise and vibration.

ES—Exhaust System. Loose or broken components may contact body causing noise. In addition, mispositioned components (e.g., muffler, converter, pipes, hangers) may also contact body or driveline components causing noise.

SPECIFICATIONS

Vibration Diagnosis Chart

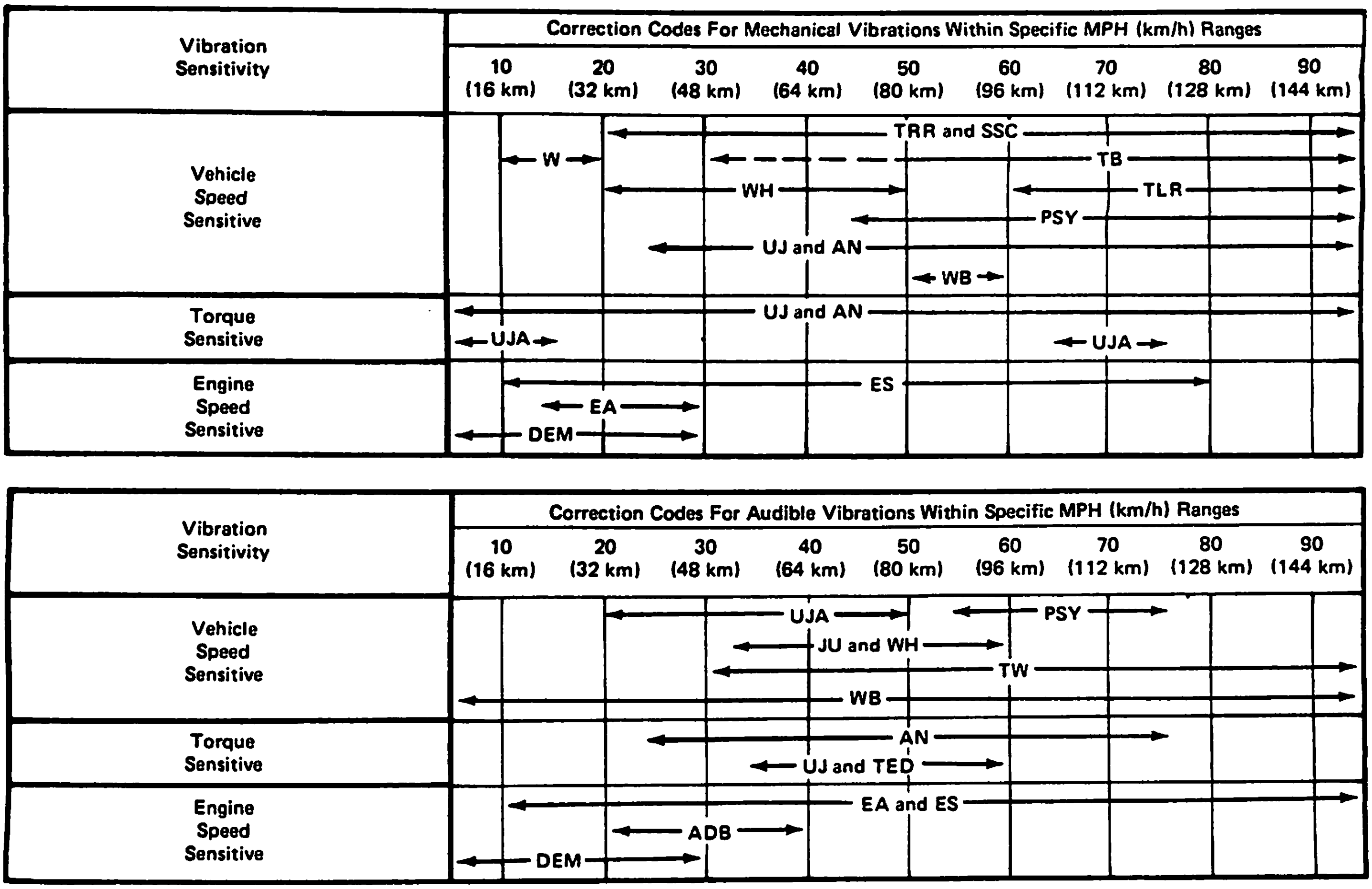

41371

Tire Inflation Pressure Chart

Model	GVW Rating		Tire Size	Load Range	Normal Load ①				Maximum Load ②				Wheel Size	
					Sustained Driving Over 65 mph (105 km/h) ④		Under 65 mph (105 km/h)		Sustained Driving Over 65 mph (105 km/h) ④		Under 65 mph (105 km/h)			
	lbs	kg			Front	Rear	Front	Rear	Front	Rear	Front	Rear		
CJ-5 & CJ-7 Scrambler	4150	1882	G78-15	B	24	24	20	20	24	24	20	20	15x5.50/15x7	
			P235/75R15	SL③	30	30	20	20	35⑤	35	25⑤	25	15x5.50/15x7	
			H78-15	B&D	24	24	20	20	28	28	24	24	15x7	
			L78-15	B&C	24	24	20	20	24	24	20	20		
Cherokee & Wagoneer	6200	2812	L78-15	B	24	24	20	20	32	32	28	28	15 x 8	Aluminum Wheel is 15 x 7
			P225/75R-15	SL ③	31	31	28	28	35*	35*	32	32	15 x 6	
			P235/75R-15	SL ③	31	31	28	28	35*	35*	32	32	15 x 7	
			10R-15LT	B	35	35	25	25	45*	45*	35	35	15 x 8	
J-10 Truck	6200	2812	H78-15	B	28	28	24	24	32*	32*	32	32	15 x 6	Aluminum Wheel is 15 x 7
			H78-15	D	28	28	24	24	36	36	32	32	15 x 6	
			P225/75R-15	SL ③	31	31	28	28	35*	35*	32	32	15 x 6	
			10R-15LT	B	35	35	25	25	45*	45*	35	35	15 x 7	
													15 x 8	
J-20 Truck	6800	3084	8.75-16.5	C	40	40	30	30	50*	55*	40	45	16.5 x 6	
			9.50-16.5	D	45	45	35	35	55*	70*	45	60	16.5 x 6.75	
	7600	3447	9.50-16.5	D	45	45	35	35	55*	70*	45	60	16.5 x 6.75	
	8400	3810	9.50-16.5	D	45	45	35	35	55*	70*	45	60	16.5 x 6.75	
Cherokee & Wagoneer with Snow Plow Package	6200	2812	H78-15	D	28	28	24	24	40*	40*	38	38	15 x 6	Aluminum Wheel is 15 x 7
J-10 Truck with Snow Plow Package	6200	2812	H78-15	D	28	28	24	24	40*	40*	38	38	15 x 6	

NOTE: Inflate tires while cold, before running. Do not reduce pressure if tires are warm.

*Speed limited to 74 mph (119 km/h).

① Normal Load: Frequently selected accessories plus driver and two passengers. For CJ and Scrambler models, driver and one passenger..

② Maximum Load: Gross Vehicle Weight Rating (GVWR).

③ SL is approximate metric tire equivalent of load range B.

④ Sustained driving over 74 mph (119 km/h) for Cherokee and Wagoneer except where indicated by asterisk (*).

⑤ Reduce inflation pressure by 5 psi for Scrambler only.

90145

Tire and Wheel Runout Specifications

Tire Radial Runout:		
Conventional Tire	0.105 inch	2.66 mm
Radial Tire	0.080 inch	2.03 mm
Tire Lateral Runout (All)	0.100 inch	2.54 mm
Wheel Radial Runout (All)	0.045 inch	1.14 mm
Wheel Lateral Runout (All)	0.045 inch	1.14 mm

80419

Torque Specifications

Service Set-To Torques should be used when assembling components. Service In-Use Recheck Torques should be used for checking a pre-tightened item.

	USA (ft-lbs)		Metric (N·m)	
	Service Set-To Torque	Service In-Use Recheck Torque	Service Set-To Torque	Service In-Use Recheck Torque
Caliper Mounting Bolt (Cke-Wag-Trk)	35	30-40	47	41-54
Caliper Support Key Retaining Screw (CJ-Scrambler)	15	15-18	20	20-24
Wheel Retaining Nuts:				
Wheel Bearing Adjustment (CJ-Scrambler)	75	65-80	102	88-108
Cke—Wag—J-10 Trk.	75	65-90	102	88-122
J-20 Trk (8400 GVW)	130	110-150	176	149-203
Wheel Bearing Adjustment CJ and Scrambler				
Outer Locknut	50	50 min.	68	68 min.
Inner Locknut (Adjusting Nut)	Tighten to 50 foot-pounds (68 N-m) torque and back locknut off 1/6 turn (45°-65° while rotating wheel			
Wheel Bearing Adjustment (Cke-Wag-Trk):				
Outer Locknut	50	50 min.	68	68 min.
Inner Locknut	Tighten to 50 Foot-pounds (68 N·m), and back off locknut 1/6 turn (45°-65°) while rotating wheel			

All Torque values given in foot-pounds and newton-meters with dry fits unless otherwise specified.

STEERING COLUMNS

2J

INDEX

GENERAL

Three different steering column designs are used on Jeep vehicles. Models with automatic transmission use a nontilt column with column mounted gearshift mechanism. Models with manual transmission use a nontilt column with ignition key release lever. A six position tilt column is available as an option on all models.

All steering columns used on Jeep vehicles have anti-theft and energy absorbing features. Each column is designed to compress under impact.

The ignition lock cylinder and ignition switch are mounted on the column. When the lock cylinder is turned to LOCK position, the ignition switch and steering shaft cannot be operated. On models with automatic transmission, the lock mechanism also prevents operation of the column mounted gearshift mechanism.

A center slip-type (telescoping) intermediate shaft is used on all models. It is attached to the steering gear with a flexible coupling and to the steering column with a universal joint.

SERVICE DIAGNOSIS

When diagnosing steering column malfunctions, refer to the Service Diagnosis Charts for the probable cause and correction procedures. To simplify chart use, they are divided into the various sub-systems within the column such as ignition system, lock mechanism, turn signal switch and electrical.

Service Diagnosis—Lock System

Condition	Possible Cause	Correction
WILL NOT LOCK	(1) Lockbolt spring broken or defective.	(1) Replace lock bolt spring.
HIGH EFFORT (REQUIRED TO TURN IGNITION KEY AND LOCK CYLINDER)	(1) Lock cylinder defective.	(1) Replace lock cylinder.
	(2) Ignition switch defective.	(2) Replace ignition switch.
	(3) Rack preload spring broken or deformed.	(3) Replace preload spring.

60659A

Service Diagnosis—Lock System (continued)

Condition	Possible Cause	Correction
HIGH EFFORT (REQUIRED TO TURN IGNITION KEY AND LOCK CYLINDER) (CON'T)	(4) Burr on lock sector, lock rack, housing, support or remote rod coupling.	(4) Remove burr.
	(5) Bent sector shaft.	(5) Replace shaft.
	(6) Defective lock rack.	(6) Replace lock rack.
	(7) Remote rod bent, deformed.	(7) Replace rod.
	(8) Ignition switch mounting bracket bent.	(8) Straighten or replace.
	(9) Distorted coupling slot in lock rack (tilt column).	(9) Replace lock rack.
WILL STICK IN "START"	(1) Remote rod deformed.	(1) Straighten or replace.
	(2) Ignition switch mounting bracket bent.	(2) Straighten or replace.
KEY CANNOT BE REMOVED IN "OFF-LOCK"	(1) Ignition switch is not adjusted correctly.	(1) Adjust switch.
	(2) Defective lock cylinder.	(2) Replace lock cylinder.
LOCK CYLINDER CAN BE REMOVED WITHOUT DEPRESSING RETAINER	(1) Lock cylinder with defective retainer.	(1) Replace lock cylinder.
	(2) Burr over retainer slot in housing cover or on cylinder retainer.	(2) Remove burr.
HIGH EFFORT ON LOCK CYLINDER BETWEEN "OFF" AND "OFF-LOCK"	(1) Distorted lock rack.	(1) Replace lock rack.
	(2) Burr on tang of shift gate (automatic column).	(2) Remove burr.
	(3) Gearshift linkage not adjusted.	(3) Adjust linkage.

60659B

Service Diagnosis—Steering Column

Condition	Possible Cause	Correction
NOISE IN COLUMN	(1) One click when in "off-lock" position and the steering wheel is moved (all except automatic column).	(1) Normal—lock bolt is seating.
	(2) Coupling bolts not tightened.	(2) Tighten pinch bolts.
	(3) Lack of grease on bearings or bearing surfaces.	(3) Lubricate with chassis grease.
	(4) Upper shaft bearing worn or broken.	(4) Replace bearing assembly.
	(5) Lower shaft bearing worn or broken.	(5) Replace bearing. Check shaft and replace if scored.
	(6) Column not correctly aligned.	(6) Align column.
	(7) Coupling pulled apart.	(7) Replace coupling.
	(8) Broken coupling lower joint.	(8) Repair or replace joint and align column.
	(9) Steering shaft snap ring not seated.	(9) Replace snap ring. Check for proper seating in groove.
	(10) Shroud loose on shift bowl. Housing loose on jacket—will be noticed with ignition in "off-lock" and when torque is applied to steering wheel.	(10) Position shroud over lugs on shift bowl. Tighten mounting screws.
HIGH STEERING SHAFT EFFORT	(1) Column misaligned.	(1) Align column.
	(2) Defective upper or lower bearing.	(2) Replace as required.
	(3) Tight steering shaft universal joint.	(3) Repair or replace.
	(4) Flash on I.D. of shift tube at plastic joint (tilt column only).	(4) Replace shift tube.
	(5) Upper or lower bearings siezed.	(5) Replace bearings.
LASH IN MOUNTED COLUMN ASSEMBLY	(1) Column mounting bracket bolts loose.	(1) Tighten bolts.
	(2) Broken weld nuts on column jacket.	(2) Replace column jacket.
	(3) Column capsule bracket sheared.	(3) Replace bracket assembly.
	(4) Column bracket to column jacket mounting bolts loose.	(4) Tighten to specified torque.
	(5) Loose lock shoes in housing (tilt column only).	(5) Replace shoes.

60659C

Service Diagnosis—Steering Column (Continued)

Condition	Possible Cause	Correction
LASH IN MOUNTED COLUMN ASSEMBLY (CON'T)	(6) Loose pivot pins (tilt column only).	(6) Replace pivot pins and support.
	(7) Loose lock shoe pin (tilt column only).	(7) Replace pin and housing.
	(8) Loose support screws (tilt column only).	(8) Tighten screws.
HOUSING LOOSE (TILT COLUMN ONLY)	(1) Excessive clearance between holes in support or housing and pivot pin diameters.	(1) Replace pivot pins and support.
	(2) Housing support-screws loose.	(2) Tighten screws.
STEERING WHEEL LOOSE—EVERY OTHER TILT POSITION (TILT COLUMN ONLY)	(1) Loose fit between lock shoe and lock shoe pivot pin.	(1) Replace lock shoes and pivot pin.
STEERING COLUMN NOT LOCKING IN ANY TILT POSITION (TILT COLUMN ONLY)	(1) Lock shoe siezed on pivot pin.	(1) Replace lock shoes and pin.
	(2) Lock shoe grooves have burrs or are filled with foriegn material.	(2) Clean or replace lock shoes.
	(3) Lock shoe springs weak or broken.	(3) Replace springs.
NOISE WHEN TILTING COLUMN (TILT COLUMN ONLY)	(1) Upper tilt bumpers worn.	(1) Replace tilt bumper.
	(2) Tilt spring rubbing in housing.	(2) Lubricate with chassis grease.
ONE CLICK WHEN IN"OFF-LOCK" POSITION AND THE STEERING WHEEL IS MOVED	(1) Seating of lock bolt.	(1) None. Click is normal characteristic sound produced by lock bolt as it seats.
HIGH SHIFT EFFORT (AUTOMATIC AND TILT COLUMN ONLY)	(1) Column not correctly aligned.	(1) Align column.
	(2) Lower bearing not aligned correctly.	(2) Assemble correctly.
	(3) Lack of grease on seal or lower bearing areas.	(3) Lubricate with chassis grease.
IMPROPER TRANSMISSION SHIFTING—AUTOMATIC AND TILT COLUMN ONLY	(1) Sheared shift tube joint.	(1) Replace shift tube.
	(2) Improper transmission gearshift linkage adjustment.	(2) Adjust linkage.
	(3) Loose lower shift lever.	(3) Replace shift tube.

60659D

Service Diagnosis—Ignition System

Condition	Possible Cause	Correction
IGNITION SWITCH ELECTRICALLY INOPERATIVE	(1) Loose or defective switch connector. (2) Feed wire open (fusible link). (3) Defective ignition switch.	(1) Tighten or replace connector. (2) Repair or replace. (3) Replace ignition switch.
ENGINE WILL NOT CRANK	(1) Ignition switch not adjusted properly.	(1) Adjust switch.
IGNITION SWITCH WILL NOT ACTUATE MECHANICALLY	(1) Defective ignition switch. (2) Defective lock sector. (3) Defective remote rod.	(1) Replace switch. (2) Replace lock sector. (3) Replace remote rod.
IGNITION SWITCH CANNOT BE ADJUSTED CORRECTLY	(1) Remote rod deformed.	(1) Repair, straighten or replace.

60659E

Service Diagnosis—Turn Signal

Condition	Possible Cause	Correction
TURN SIGNAL WILL NOT CANCEL	(1) Loose switch mounting screws. (2) Switch or anchor bosses broken. (3) Broken, missing or out of position detent, or cancelling spring.	(1) Tighten screws. (2) Replace switch. (3) Reposition springs or replace switch as required.

Service Diagnosis — Turn Signal (Continued)

Condition	Possible Cause	Correction
TURN SIGNAL DIFFICULT TO OPERATE	(1) Turn signal lever loose.	(1) Tighten mounting screw.
	(2) Switch yoke broken or distorted.	(2) Replace switch.
	(3) Loose or misplaced springs.	(3) Reposition springs or replace switch.
	(4) Foreign parts and/or materials in switch.	(4) Remove foreign parts and/or material.
	(5) Switch mounted loosely.	(5) Tighten mounting screws.
TURN SIGNAL WILL NOT INDICA LANE CHANGE	(1) Broken lane change pressure pad or spring hanger.	(1) Replace switch.
	(2) Broken, missing or misplaced lane change spring.	(2) Replace or reposition as required.
	(3) Jammed wires.	(3) Loosen mounting screws, reposition wires and retighten screws.
TURN SIGNAL WILL NOT STAY IN TURN POSITION	) Foreign material or loose parts impeding movement of switch yoke.	(1) Remove material and/or parts.
	Defective switch.	(2) Replace switch.
HAZARD SWITCH CANNOT BE PULLED OUT	Foreign material between azard support cancelling eg and yoke.	(1) Remove foreign material. (a) No foreign material impeding function of hazard switch—replace turn signal switch.

60659G

Service Diagnosis — Turn Signal (Continued)

Condition	Possible Cause	Correction
NO TURN SIGNAL LIGHTS	(1) Inoperative turn signal flasher.	(1) Replace turn signal flasher.
	(2) Defective or blown fuse.	(2) Replace fuse.
	(3) Loose chassis to column harness connector.	(3) Connect securely.
	(4) Disconnect column to chassis connector. Connect new switch to chassis and operate switch by hand. If vehicle lights now operate normally, signal switch is inoperative.	(4) Replace signal switch.
	(5) If vehicle lights do not operate check chassis wiring for opens, grounds, etc.	(5) Repair chassis wiring as required.
INSTRUMENT PANEL TURN INDICATOR LIGHTS ON BUT NOT FLASHING	(1) Burned out or damaged front or rear turn signal bulb.	(1) Replace bulb.
	(2) If vehicle lights do not operate, check light sockets for high resistance connections, the chassis wiring for opens, grounds, etc.	(2) Repair chassis wiring as required.
	(3) Inoperative flasher.	(3) Replace flasher.
	(4) Loose chassis to column harness connection.	(4) Connect securely.
	(5) Inoperative turn signal switch.	(5) Replace turn signal switch.
	(6) To determine if turn signal switch is defective, substitute new switch into circuit and operate switch by hand. If the vehicle's lights operate normally, signal switch is inoperative.	(6) Replace turn signal switch.

60659H

Service Diagnosis—Turn Signal (Continued)

Condition	Possible Cause	Correction
STOP LIGHT NOT ON WHEN TURN INDICATED	(1) Loose column to chassis connection.	(1) Connect securely.
	(2) Disconnect column to chassis connector. Connect new switch into system without removing old. Operate switch by hand. If brake lights work with switch in the turn position, signal switch is defective.	(2) Replace signal switch.
	(3) If brake lights do not work check connector to stop light sockets for grounds, opens, etc.	(3) Repair connector to stop l circuits using service manu as guide.
TURN INDICATIOR PANEL LIGHTS NOT FLASHING	(1) Burned out bulbs.	(1) Replace bulbs.
	(2) High resistance to ground at bulb socket.	(2) Replace socket.
	(3) Opens, grounds in wiring harness from front turn signal bulb socket to indicator lights.	(3) Locate and repair as required
TURN SIGNAL LIGHTS FLASH VERY SLOWLY	(1) High resistance ground at light sockets.	(1) Repair high resistance grounds at light sockets.
	(2) Incorrect capacity turn signal flasher or bulb.	(2) Replace turn signal flasher or bulb.
	(3) If flashing rate is still extremely slow, check chassis wiring harness from the connector to light sockets for high resistance.	(3) Locate and repair as required.

Service Diagnosis — Turn Signal (Continued)

Condition	Possible Cause	Correction
TURN SIGNAL LIGHTS FLASH VERY SLOWLY (CON'T.)	(4) Loose chassis to column harness connection.	(4) Connect securely.
	(5) Disconnect column to chassis connector. Connect new switch into system without removing old. Operate switch by hand. If flashing occurs at normal rate, the signal switch is defective.	(5) Replace turn signal switch.
HAZARD SIGNAL LIGHTS WILL NOT FLASH—TURN SIGNAL FUNCTIONS NORMALLY	(1) Blown fuse.	(1) Replace fuse.
	(2) Inoperative hazard warning flasher.	(2) Replace hazard warning flasher in fuse panel.
	(3) Loose chassis-to-column harness connection.	(3) Connect securely.
	(4) Disconnect column to chassis connector. Connect new switch into system without removing old. Depress the hazard warning lights. If they now work normally, turn signal switch is defective.	(4) Replace turn signal switch.
	(5) If lights do not flash, check wiring harness "K" lead for open between hazard flasher and connector. If open, fuse block is defective.	(5) Repair or replace brown wire or connector as required.

60659K

STEERING COLUMN ALIGNMENT

(1) Loosen all toeplate screws.

(2) Remove instrument panel lower trim.

(3) Loosen column mounting bracket-to-instrument-panel attaching bolts.

(4) Pull steering column upward. Maintain upward pressure and tighten instrument panel-to-column mounting bracket bolts to 20 foot-pounds (27 N•m) torque.

(5) Install lower clamp bracket and tighten bolts to 20 foot-pounds (27 N•m) torque.

(6) Tighten toeplate screws to 10 foot-pounds (14 N•m) torque.

(7) Install instrument panel lower trim.

(8) On vehicles with automatic transmission, check gearshift manual linkage for proper operation. Refer to Chapter 2C—Automatic Transmission.

STEERING WHEEL REMOVAL

CJ Models

(1) Disconnect battery negative cable.

(2) Place front wheels in straight-ahead position.

(3) Remove horn button. Pull button straight up to remove.

(4) Remove steering wheel nut and washer.

(5) Remove receiver bushing attaching screws and remove bushing.

(6) Remove horn button receiver and contact plate.

(7) Paint or scribe alignment marks on steering wheel and steering shaft for assembly reference.

(8) Remove steering wheel using Puller J-21232 (fig. 2J-1).

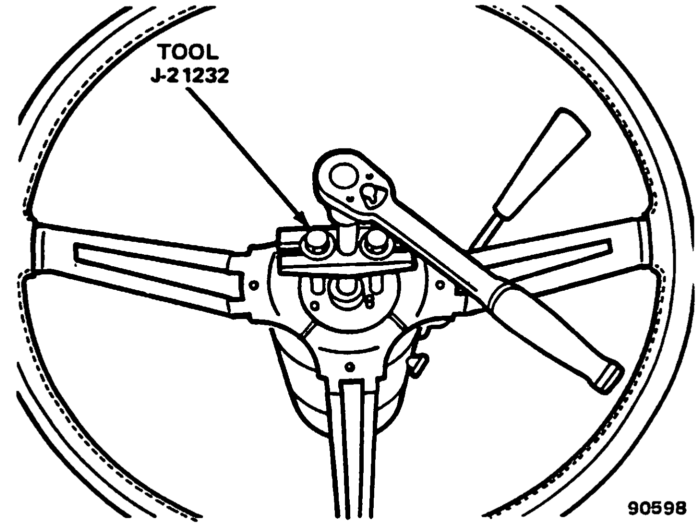

Fig. 2J-1 Steering Wheel Removal

Cherokee-Wagoneer-Truck Models

(1) Disconnect battery negative cable.

(2) Place front wheels in straight-ahead position.

(3) On models with standard steering wheel, remove horn cover attaching screws from underside of wheel and remove cover. On models with sport steering wheel, remove horn button by pulling button upward.

(4) On models with standard steering wheel, remove horn wire. Disconnect wire at steering wheel switch. Unseat retainer that holds horn wire and spring in canceling cam yoke and remove wire, retainer, and spring as assembly.

(5) Remove steering wheel nut and washer.

(6) On models with sport steering wheel, remove receiver bushing attaching screws and remove bushing, horn button receiver, and contact plate.

(7) Paint or scribe alignment marks on steering wheel and steering shaft for assembly reference.

(8) Remove steering wheel using Puller J-21232 (fig. 2J-1).

STEERING WHEEL INSTALLATION

CAUTION: *Some steering shafts have metric steering wheel nut threads. Inspect and identify the shaft thread type before installing a replacement nut. Metric shafts have an identifying groove in the steering wheel splines (fig. 2J-2). American thread shafts do not have this groove.*

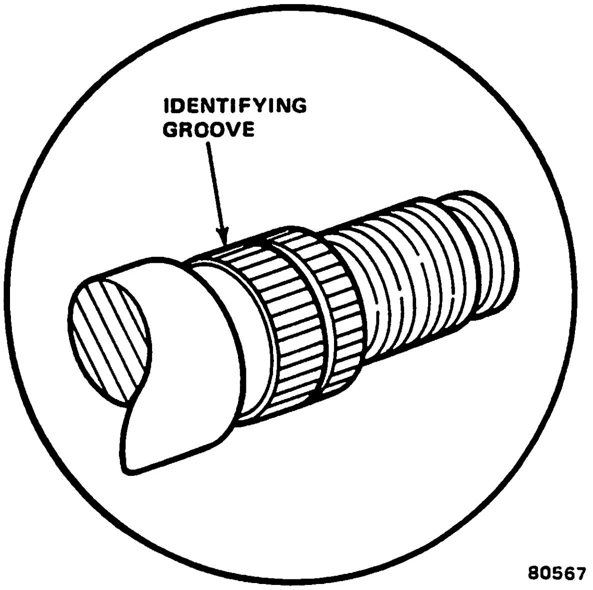

Fig. 2J-2 Metric Steering Shaft Identification

CJ Models

(1) Align reference marks on steering shaft and steering wheel and install wheel.

(2) Install contact plate and horn button receiver. Install receiver so horn button locating notch is at 12 o'clock position.

(3) Install receiver bushing and bushing attaching screws.

(4) Install steering wheel washer and nut. Tighten nut to 30 foot-pounds (41 N•m) torque.

(5) Install horn button.

(6) Connect battery negative cable.

(7) Reset clock, if equipped.

Cherokee-Wagoneer-Truck Models

(1) Align reference marks on steering shaft and steering wheel and install wheel.

(2) On models with sport steering wheel (fig. 2J-3), install contact plate, horn button receiver, and receiver bushing. Be sure to install receiver so horn button locating notch is at 12 o'clock position.

(3) Install steering wheel washer and nut. Tighten nut to 30 foot-pounds (41 N•m) torque.

(4) On models with standard steering wheel, insert spring and horn wire in canceling cam yoke. Seat horn wire retainer in cam yoke and connect opposite end of wire to steering wheel switch.

(5) Install horn button.

(6) Connect battery negative cable.

(7) Reset clock, if equipped.

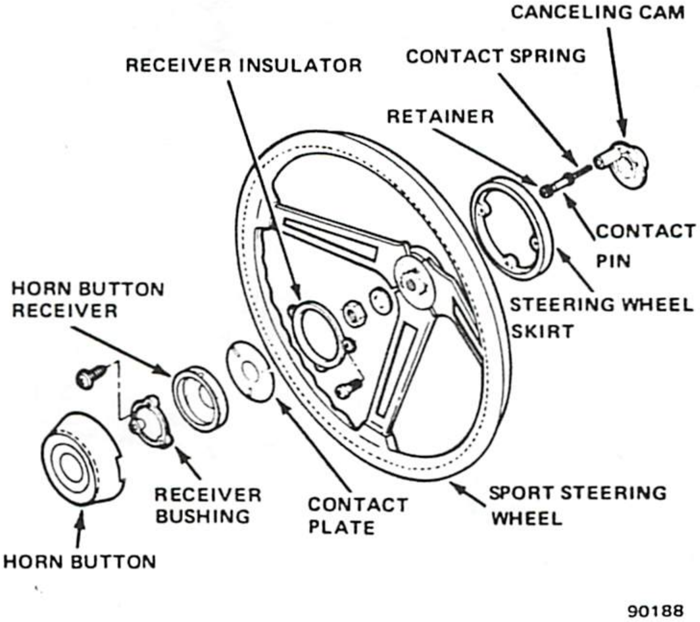

Fig. 2J-3 Sport Steering Wheel Assembly

SPORT STEERING WHEEL SKIRT REPLACEMENT

(1) Disconnect battery negative cable.

(2) Place wheels in straight-ahead position.

(3) Remove horn button. Pull straight up on button to remove.

(4) Remove steering wheel nut and washer.

(5) Remove receiver bushing attaching screws and remove bushing, horn button receiver, and contact plate (fig. 2J-3).

(6) Remove steering wheel using Tool J-21232 (fig. 2J-1).

(7) Remove receiver insulator attaching screws and remove insulator and skirt (fig. 2J-3).

(8) Color coat replacement skirt. Refer to Chapter 3B—Metal Repair and Painting for color coat procedure.

(9) Align and install replacement skirt and receiver insulator on steering wheel and install insulator attaching screws.

(10) Align reference marks on steering shaft and wheel and install wheel.

(11) Install contact plate and horn button receiver. Install receiver so horn button locating notch is at 12 o'clock position.

(12) Install receiver bushing and bushing attaching screws.

(13) Install steering wheel washer and nut. Tighten nut to 30 foot-pounds (41 N•m) torque.

(14) Install horn button. Align button tab with receiver notch and press button downward until seated.

(15) Connect battery negative cable.

(16) Reset clock, if equipped.

STEERING COLUMN REMOVAL

CAUTION: *Handle the steering column with special care after it is removed from the vehicle. Sharp blows on the end of the steering shaft or shift lever, leaning on the column assembly, or dropping the assembly could shear or loosen the plastic fasteners that maintain column rigidity.*

(1) Disconnect battery negative cable.

(2) On vehicles with automatic transmission, disconnect transmission shift rod at steering column shift lever.

NOTE: *On Cherokee and Wagoneer models with automatic transmission and power brakes, the gearshift lever must be moved to the "1" range position to gain access to the shift rod-to-shift lever retaining clip.*

(3) Remove steering column-to-intermediate shaft U-joint pinch bolt.

CAUTION: *Do not attempt to separate the intermediate shaft and steering column at this time. If separated, the plastic connector injected into the intermediate shaft could be damaged.*

(4) On Cherokee and Wagoneer models with air conditioning, remove left air duct extension.

(5) Remove steering column-to-instrument panel bezel. On Cherokee, Wagoneer, and Truck models, screws attaching two halves of bezel are located behind lower bezel half.

(6) Remove bolts attaching steering column mounting bracket to instrument panel.

(7) Remove bolts attaching steering column mounting bracket to steering column and remove bracket.

CAUTION: *To avoid damaging the mounting bracket breakaway capsules, store the bracket in a safe place until service operations are completed.*

(8) Remove top and bottom toeplates.

(9) Disconnect wiring harness at ignition switch.

(10) Disconnect Cruise Command wiring harness connector, if equipped.

(11) Separate steering column from intermediate shaft and remove steering column.

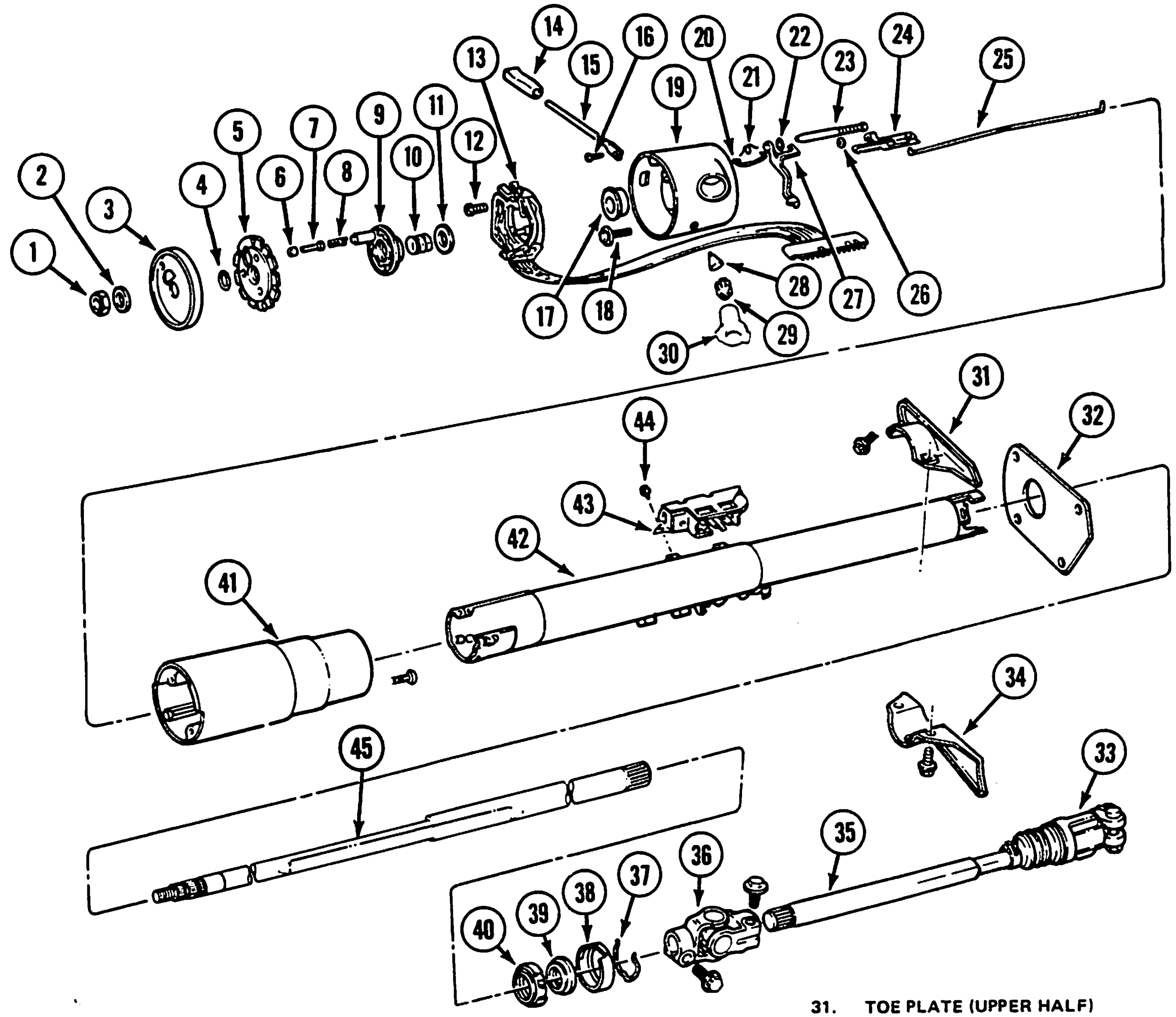

1. STEERING WHEEL NUT
2. WASHER
3. LOCK PLATE COVER
4. STEERING SHAFT SNAP RING
5. LOCKPLATE
6. RETAINER
7. HORN CONTACT PIN
8. SPRING
9. CANCELING CAM
10. UPPER BEARING PRELOAD SPRING
11. THRUST WASHER
12. TURN SIGNAL SWITCH SCREW (3)
13. TURN SIGNAL SWITCH
14. TURN SIGNAL LEVER KNOB
15. TURN SIGNAL LEVER
16. TURN SIGNAL LEVER SCREW
17. UPPER BEARING
18. HOUSING RETAINING SCREW (4)
19. HOUSING
20. RACK PRELOAD SPRING
21. KEY RELEASE LEVER SPRING
22. WAVE WASHER
23. LOCK BOLT
24. LOCK RACK
25. REMOTE ROD
26. SPRING WASHER
27. KEY RELEASE LEVER
28. HAZARD WARNING SWITCH KNOB
29. LOCK SECTOR
30. LOCK CYLINDER
31. TOE PLATE (UPPER HALF)
32. SEAL
33. INTERMEDIATE SHAFT COUPLING
34. TOE PLATE (LOWER HALF)
35. INTERMEDIATE SHAFT
36. INTERMEDIATE SHAFT-TO-STEERING SHAFT U-JOINT
37. SNAP RING
38. RETAINER
39. LOWER BEARING
40. LOWER BEARING ADAPTER
41. SHROUD
42. JACKET
43. IGNITION SWITCH
44. IGNITION SWITCH SCREW (2)
45. STEERING SHAFT

60684

Fig. 2J-4 Steering Column—Manual Transmission

STEERING COLUMN INSTALLATION

CAUTION: *Use only the specified screws, bolts, and nuts when servicing the column. Do not use any substitute fasteners. Tighten all fasteners to the specified torque only to maintain the energy-absorbing (compression) action of the column. Bolts and screws longer than specified must not be used as they may prevent the column from compressing under impact. The bolts or nuts securing the column mounting bracket to the instrument panel must be tightened to the proper torque so that the bracket will break away under impact.*

(1) Install steering column in vehicle and connect column to intermediate shaft.

(2) Install intermediate shaft-to-column U-joint pinch bolt. Tighten bolt to 45 foot-pounds (61 N•m) torque.

(3) Connect Cruise Command wire harness connector, if equipped.

(4) Connect wiring harness connectors to ignition switch. Install white connector first—black connector last.

(5) Install top and bottom toeplates but do not tighten attaching bolts completely.

(6) Install mounting bracket on steering column and tighten bracket attaching bolts to 20 foot-pounds (27 N•m) torque.

(7) Align steering column mounting bracket and instrument panel and loosely install mounting bracket-to-instrument panel bolts.

(8) Pull steering column upward and tighten column mounting bracket-to-instrument panel bolts to 20 foot-pounds (27 N•m) torque. Be sure to maintain upward pressure on column when tightening bolts.

(9) Tighten toe plate bolts to 10 foot-pounds (14 N•m) torque.

(10) Install both halves of steering column-to-instrument panel bezel.

(11) On Cherokee, Wagoneer and Truck models with air conditioning, install left air duct extension.

(12) Connect transmission shift rod to steering column shift lever.

(13) On vehicles with automatic transmission, check operation of gearshift manual linkage and adjust linkage, if necessary. Refer to Chapter 2C—Automatic Transmission.

(14) Connect all electrical components and check for proper operation.

(15) Install instrument panel trim and left side air conditioning duct, if equipped.

(16) Connect battery negative cable.

(17) Reset clock, if equipped.

STANDARD COLUMN OVERHAUL/MANUAL TRANSMISSION

Column Disassembly

NOTE: *Steering column removal is not necessary if only the lock plate cover, lock plate, steering shaft snap ring, canceling cam, turn signal switch, upper bearing preload spring, or lock cylinder are to be serviced (fig. 2J-4). However, the column must be removed in order to service any of the remaining components. If the column is removed, remove the column-to-instrument panel mounting bracket and install Support Fixture J-23074 (fig. 2J-5). Mount the column in a vise by clamping the support fixture flange in the vise.*

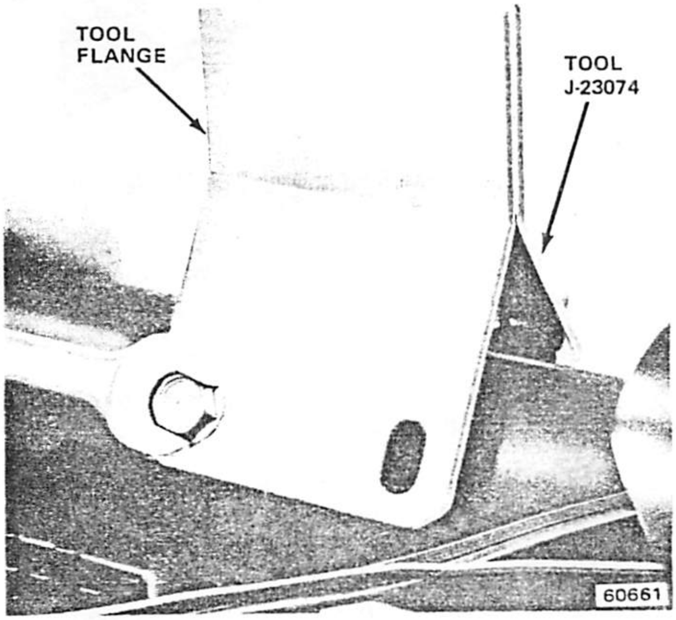

Fig. 2J-5 Steering Column Support Fixture Installation

(1) Place front wheels in straight-ahead position.

(2) Disconnect battery negative cable.

(3) Cover painted areas of column.

(4) Remove steering wheel.

(5) Remove lock plate cover. Use two screwdrivers to pry cover off lock plate and out of column.

(6) Compress lock plate and unseat steering shaft snap ring as follows:

(a) Inspect and identify steering shaft nut thread type. Metric shafts have identifying groove in steering wheel locating splines (fig. 2J-2). American thread shafts do not have this groove.

(b) If shaft has American threads, use tool J-23653 as is to compress lock plate and unseat snap ring (fig. 2J-6).

(c) If shaft has metric threads, replace compressor tool standard forcing screw with Metric Forcing Screw J-23653-4 before installing tool on steering shaft.

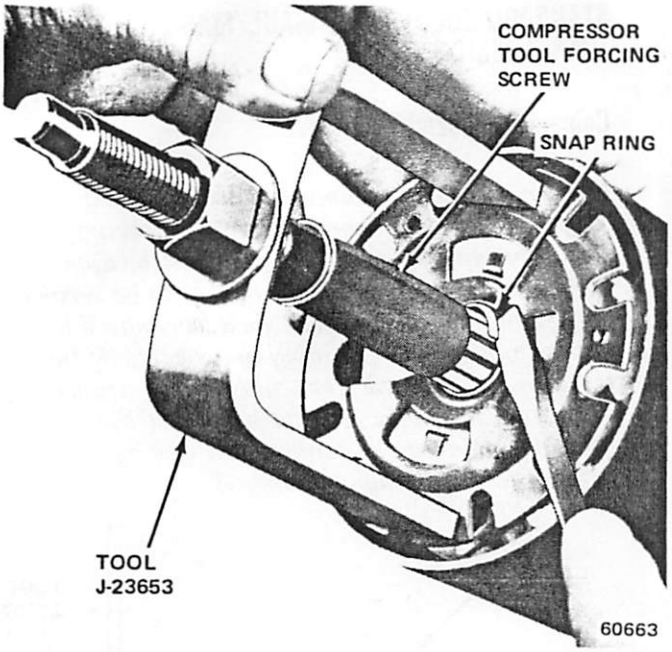

Fig. 2J-6 Steering Shaft Snap Ring Removal

WARNING: *The lock plate is under strong spring tension. Do not attempt to remove the steering shaft snap ring without using the compressor tool.*

(7) Remove lock plate compressor tool and snap ring. Discard snap ring.

CAUTION: *When the steering shaft snap ring is removed, the shaft is free in the column. During bench overhaul, remove the shaft by pulling it out from the lower end of column. Do not allow the shaft to fall out whenever the column is removed from the vehicle.*

(8) Remove lock plate, canceling cam, upper bearing preload spring, and thrust washer from shaft.

(9) Remove hazard warning switch knob. Press knob inward and unthread knob from column.

(10) On vehicles without Cruise Command, remove turn signal lever attaching screw and remove lever.

(11) On vehicles with Cruise Command, disconnect two of four wires at switch connector. Fold wires back along harness. Tape wires to harness and tape length of string to harness to aid removal.

(12) Unhook turn signal switch wire harness connector from bracket at lower end of steering column.

(13) Disconnect instrument panel harness connector from turn signal switch harness connector by lifting plastic lock tab on connector and separating connectors (fig. 2J-7).

(14) Wrap tape around turn signal switch harness connector to prevent snagging during removal.

(15) Remove turn signal switch attaching screws and remove switch. Pull switch and harness straight up and out of housing (fig. 2J-8).

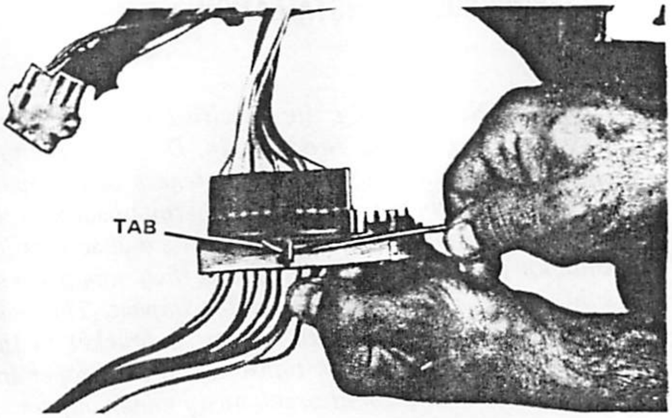

Fig. 2J-7 Turn Signal Switch Removal/Installation

(16) On vehicles with Cruise Command, remove turn signal lever and switch and remove switch harness using string previously taped in place.

(17) Turn ignition lock cylinder (clockwise) two detent positions beyond Off-LOCK position.

(18) Compress lock cylinder retaining tab using thin-bladed screwdriver and remove lock cylinder from column.

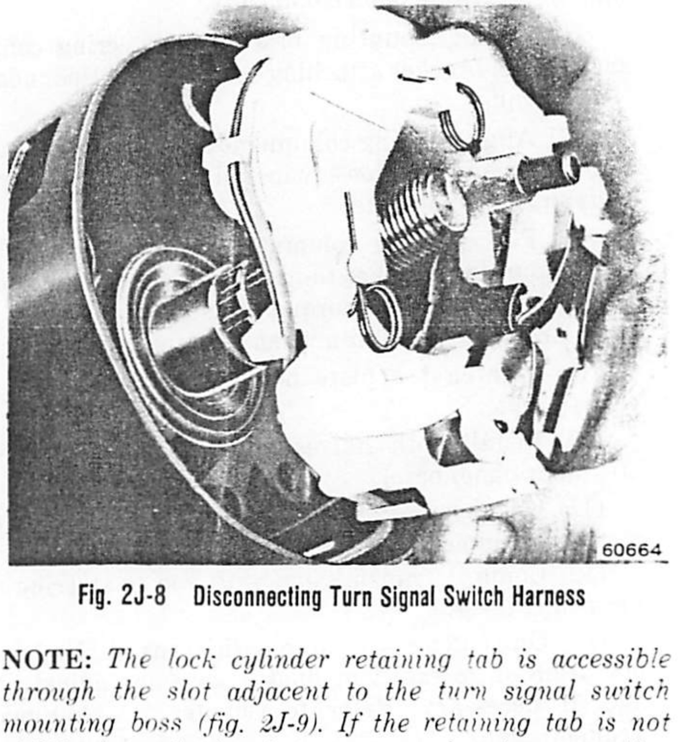

Fig. 2J-8 Disconnecting Turn Signal Switch Harness

NOTE: *The lock cylinder retaining tab is accessible through the slot adjacent to the turn signal switch mounting boss (fig. 2J-9). If the retaining tab is not visible through the slot, scrape or knock any casting flash out of the slot to provide access.*

(19) Remove ignition switch from lower end of column (fig. 2J-10).

(20) Remove screws attaching housing and shroud to column jacket (fig. 2J-11) and remove housing and shroud.

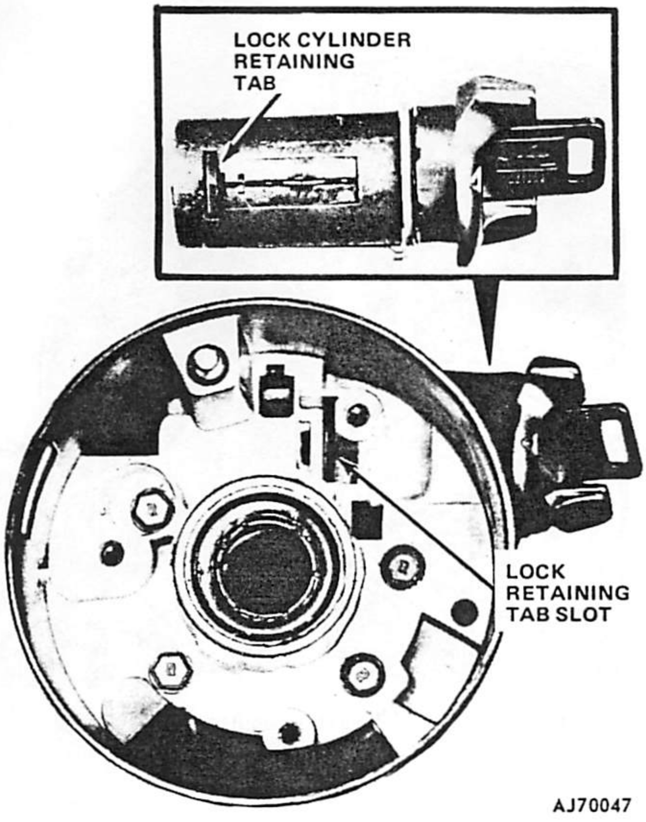

Fig. 2J-9 Lock Cylinder Retaining Tab Location

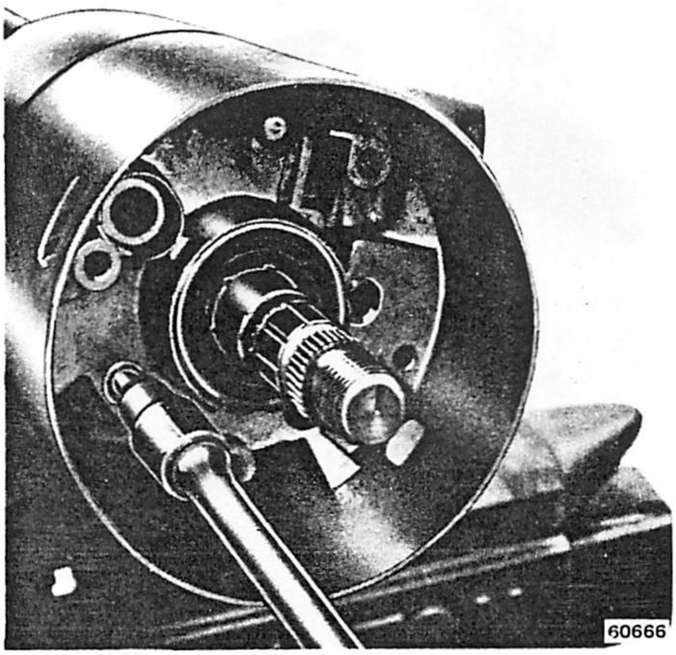

Fig. 2J-11 Housing and Shroud Removal/Installation

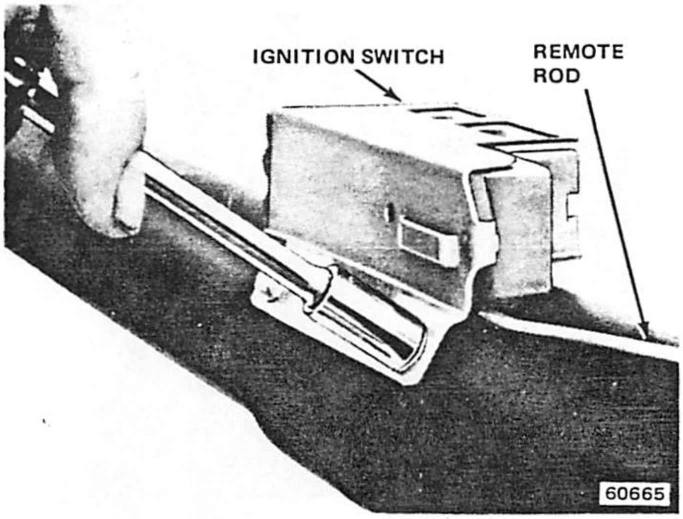

Fig. 2J-10 Ignition Switch Removal/Installation

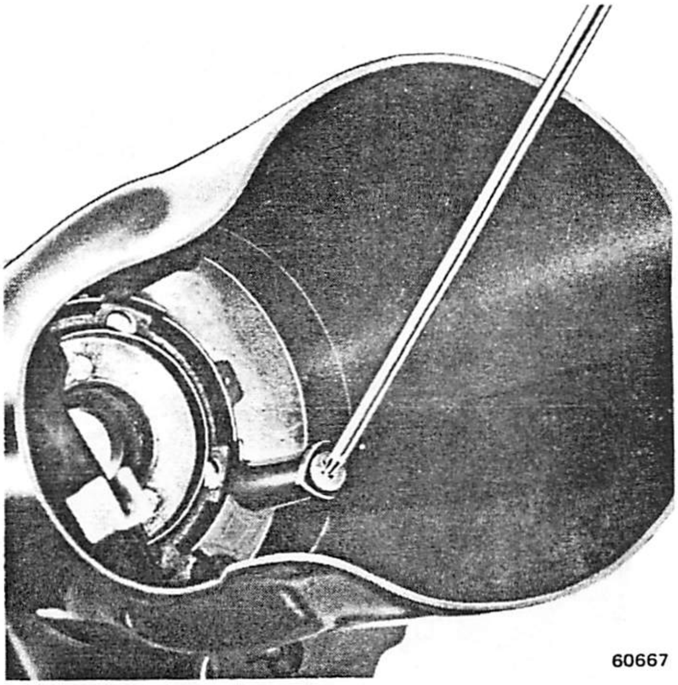

Fig. 2J-12 Removing Shroud From Housing

(21) Disengage remote rod from lock rack.

(22) Remove screws attaching shroud to housing (fig. 2H-12) and remove housing from shroud.

(23) Remove wave washer from key release lever pivot and remove key release lever and spring (fig. 2J-13).

(24) Remove lock rack and lock bolt assembly (fig. 2J-14).

(25) Remove rack preload spring (fig. 2J-15).

(26) Remove lock sector through lock cylinder hole in housing. Push on block tooth of sector with blunt punch to remove (fig. 2J-16).

NOTE: *Although the preceeding steps can be performed with the column mounted in the vehicle, the following steps can be performed only after the column has been removed.*

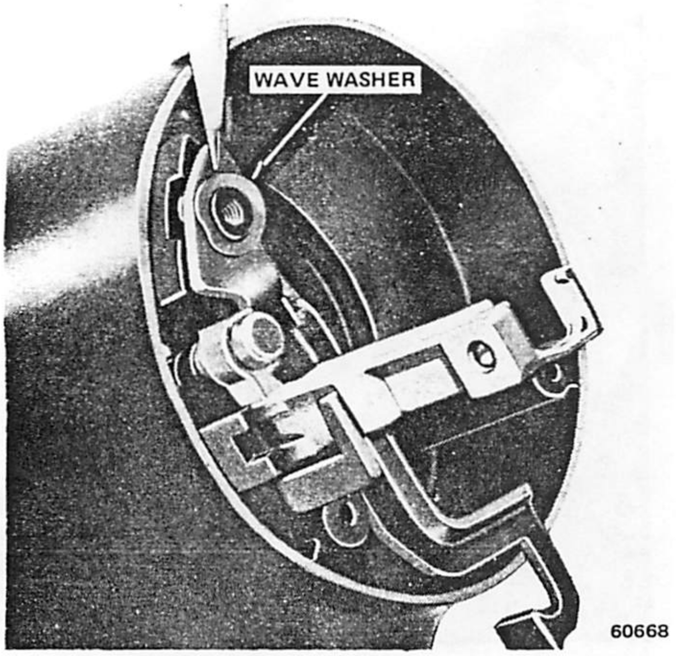

Fig. 2J-13 Wave Washer Position

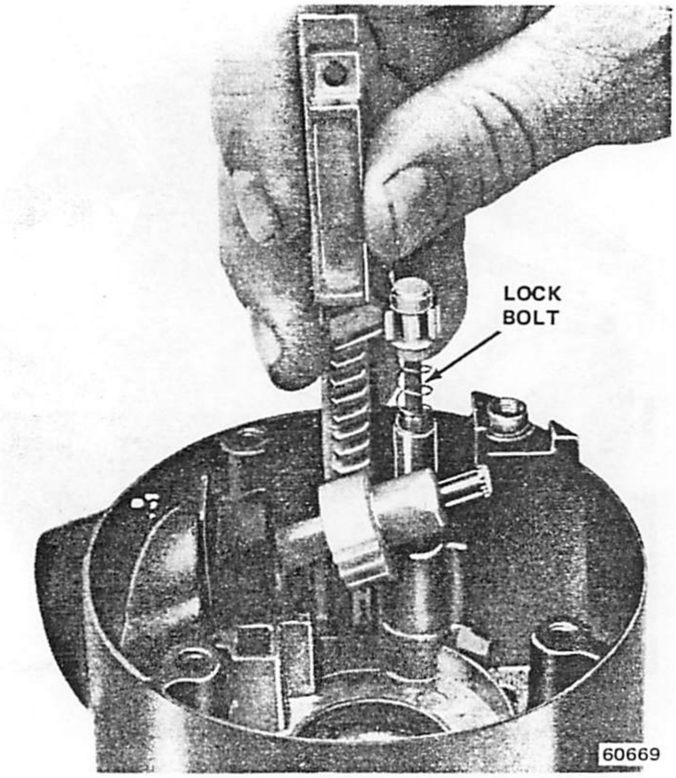

Fig. 2J-14 Lock Rack and Lock Bolt Removal

(27) Remove column from vehicle, if necessary, and mount column in vise using Support Fixture Tool J-23074 (fig. 2J-5).

(28) Remove steering shaft if not removed previously.

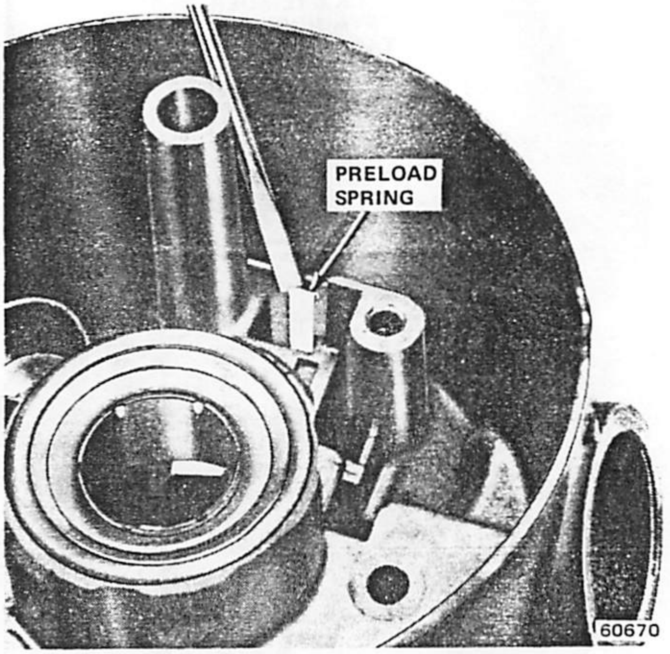

Fig. 2J-15 Rack Preload Spring Removal/Installation

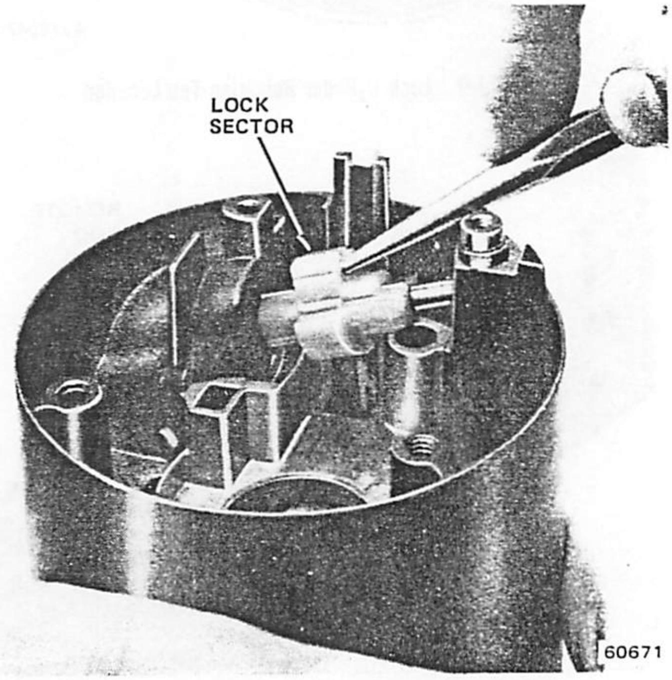

Fig. 2J-16 Lock Sector Removal

(29) Remove spring clip from lower bearing retainer and remove retainer, bearing, and adapter.

Column Assembly

CAUTION: *Use only the specified screws, bolts, and nuts when servicing the column and tighten all fasteners to recommended torque values only to maintain the energy-absorbing (compressing) action of the column.*

Incorrect length screws or bolts can prevent the column from compressing under impact. The bolts and nuts that attach the column mounting bracket to the column and instrument panel must also be tightened to the proper torque so that the bracket will brreak away under impact.

(1) Coat all friction and bearing surfaces with chassis grease before assembly.

(2) Install lock sector on sector shaft. Install sector through lock cylinder hole in housing (fig. 2J-17). Use blunt tool to press sector onto shaft. Be sure sector turns freely after installation.

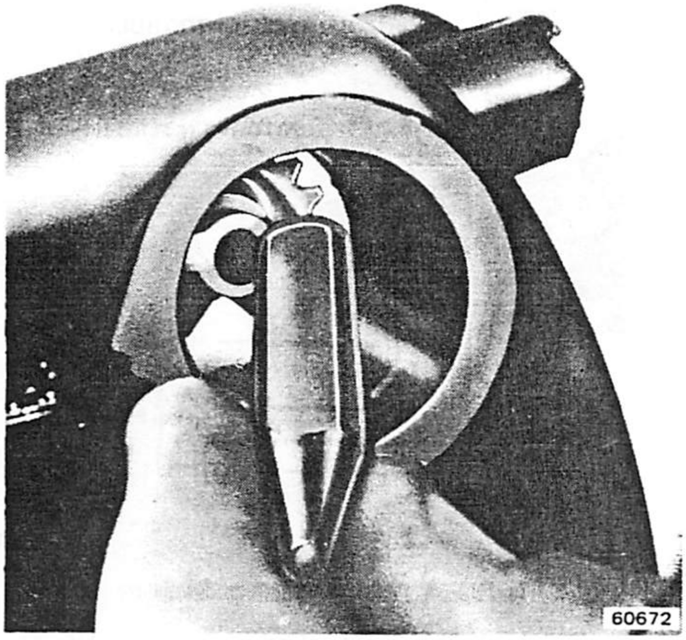

Fig. 2J-17 Sector Installation

(3) Install rack preload spring (fig. 2J-15). Bowed side of spring must bear against lock rack when rack is installed.

(4) Assemble lock bolt and lock rack (fig. 2J-18).

(5) Install assembled lock bolt and lock rack in housing. Mate block tooth of lock rack with block tooth of sector (fig. 2J-19).

(6) Install key-release lever return spring over post in housing (fig. 2J-20). Insert release lever finger in lock rack slot and position hole in lever over threaded hole in housing post (fig. 2J-21). Be sure inner end of spring contacts release lever.

(7) Raise key-release lever slightly and install end of release lever spring between lever and housing boss (fig. 2J-22).

(8) Coat wave washer with chassis grease and install washer on post and over release lever (fig. 2J-13).

(9) Position shroud on housing and install attaching screws. Tighten screws to 18 inch-pounds (2 N•m) torque. Do not displace release lever wave washer when assembling shroud and housing.

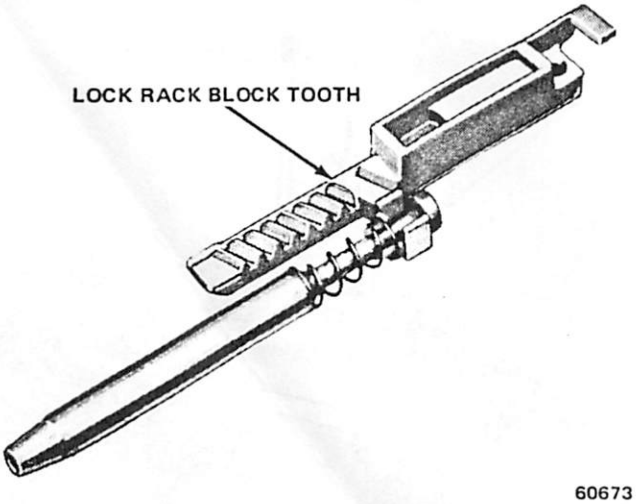

Fig. 2J-18 Assembling Lock Bolt and Lock Rack

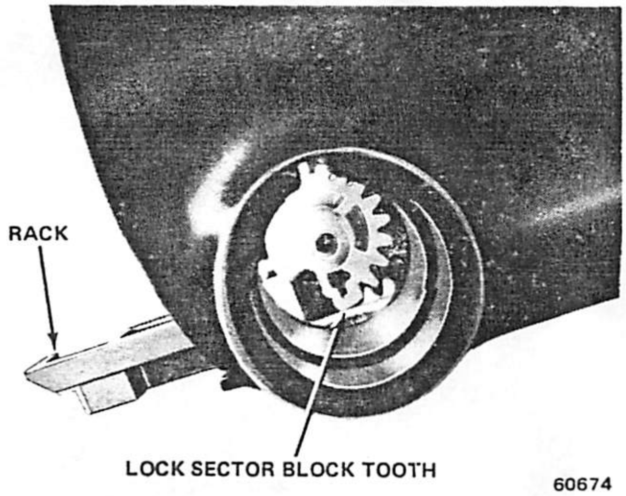

Fig. 2J-19 Lock Bolt and Lock Rack Installation

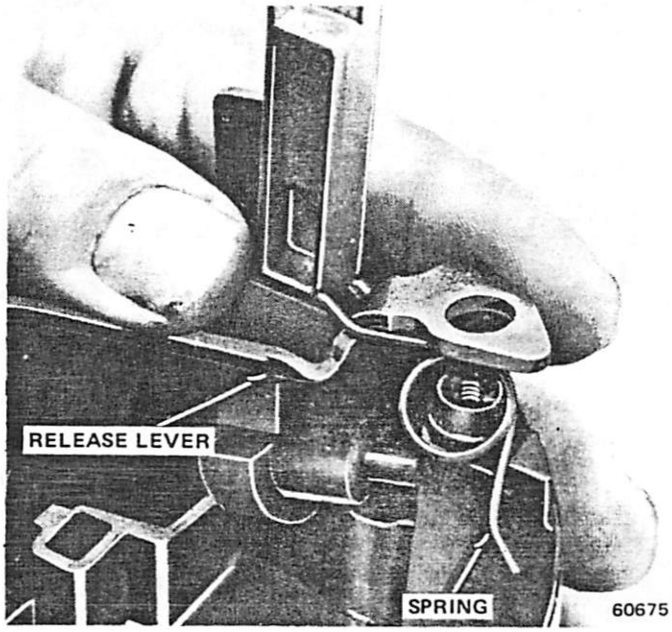

Fig. 2J-20 Key Release Lever and Spring Installation

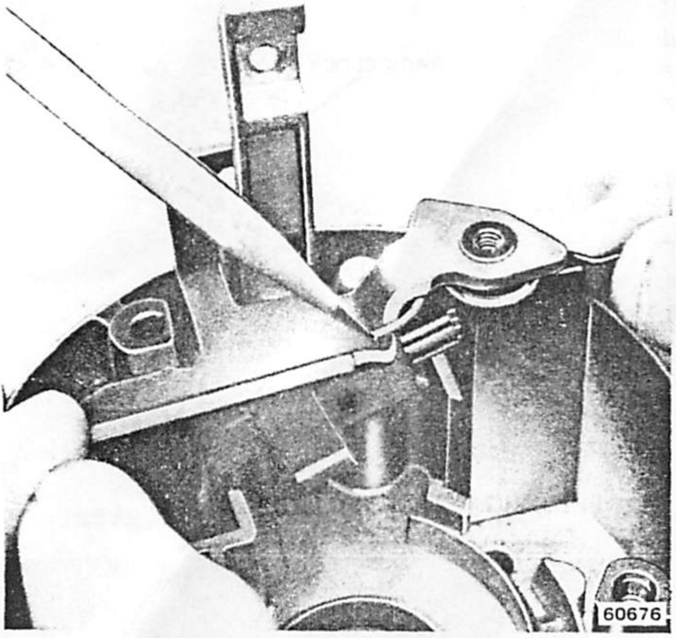

Fig. 2J-21 Positioning Key Release Lever Spring

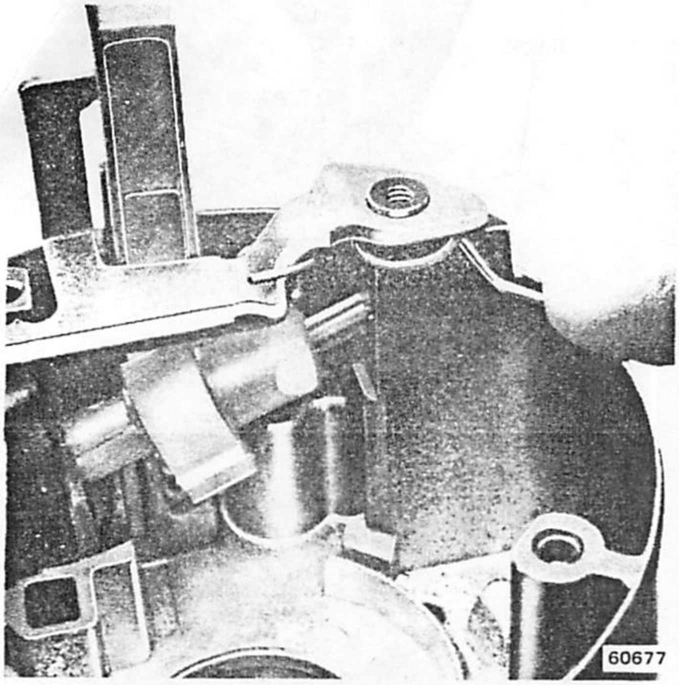

Fig. 2J-22 Securing Key Release Lever Spring

(10) Install remote rod on lock rack. Insert short hooked end of rod in lock rack.

(11) Install assembled shroud and housing on column and install attaching screws (fig. 2J-11). Tighten screws to 60 inch-pounds (7 N•m) torque.

(12) Install lock cylinder in lock cylinder sleeve. Insert key in lock, hold cylinder sleeve, and rotate key clockwise until key stops (this retracts actuator).

(13) Insert lock cylinder assembly in housing bore with cylinder tab aligned with keyway in housing. Push cylinder inward until it bottoms. Rotate key counterclockwise until drive section of cylinder mates with sector. Push cylinder in fully until tab engages in housing groove.

counterclockwise to Off-Unlock position.

(15) Install ignition switch as follows:

(a) Position switch on column jacket (fig. 2J-23).

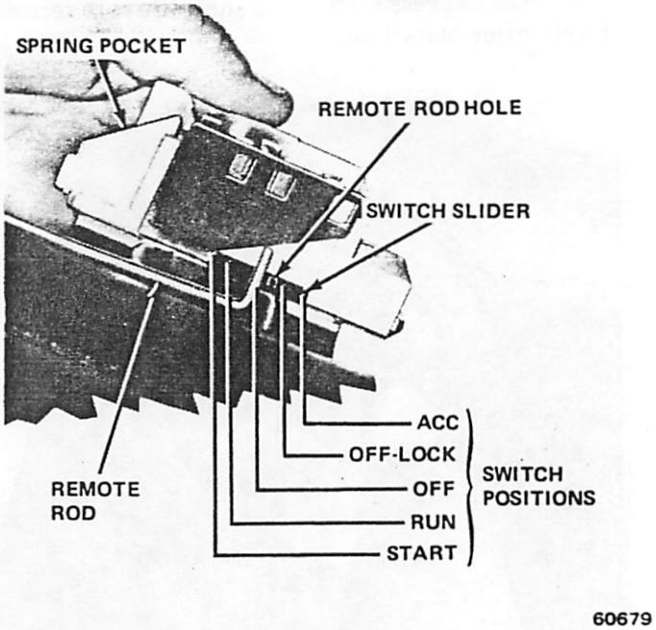

Fig. 2J-23 Positioning Ignition Switch

(b) Move switch slider to extreme left to Accessory position.

(c) Move slider two positions to right from Accessory position to Off-Unlock position.

(d) Insert remote rod into hole in switch slider.

(e) Position switch on column and install attaching screws. Tighten screws to 35 inch-pounds (4 N•m) torque.

(16) Install lower bearing, bearing adapter, retainer, and snap ring in lower end of column.

(17) Install steering shaft through lower end of column and into upper bearing in housing.

(18) Install turn signal switch and wire harness. Fold wires against connector and feed connector through housing and shroud.

(19) Align turn signal switch in housing and install switch attaching screws. Tighten screws to 35 inch-pounds (4 N•m) torque.

(20) On vehicles without Cruise Command, install turn signal lever. Tighten lever attaching screw to 35 inch-pounds (4 N•m) torque.

(21) On vehicles with Cruise Command, install lever and switch assembly. Use string previously taped in

place to guide wires into housing. Remove string and tape. Connect wires to switch terminal and install lever attaching screw. Tighten screw to 35 inch-pounds (4 N•m) torque.

(22) Install thrust washer, upper bearing preload spring, and canceling cam on steering shaft. Position canceling cam as shown in figure 2J-24.

(23) Place turn signal switch in neutral position and install hazard warning switch knob.

(24) Position lock plate on steering shaft.

(25) Install replacement steering shaft snap ring on sleeve of Compressor Tool J-23653 and install tool on steering shaft (fig. 2J-25).

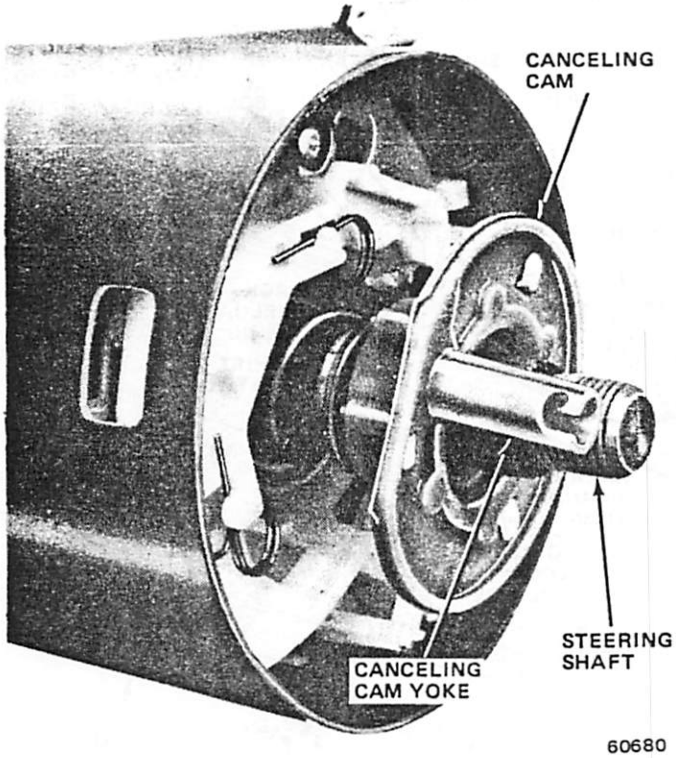

Fig. 2J-24 Positioning Canceling Cam

CAUTION: *Identify the steering shaft nut thread type before using the compressor tool. If the shaft has American threads, use the compressor tool as is. However, if the shaft has metric threads (fig. 2J-2), replace the compressor tool forcing screw with Metric Forcing Screw J-23653-4 before using the tool.*

(26) Compress lock plate and install snap ring in steering shaft groove (fig. 2J-25).

(27) Remove compressor tool. Be sure snap ring is fully seated before removing tool.

(28) Install lock plate cover.

(29) Remove Support Fixture Tool J-23074, if installed.

(30) Install column mounting bracket. Tighten bracket attaching bolts to 20 foot-pounds (27 N•m) torque.

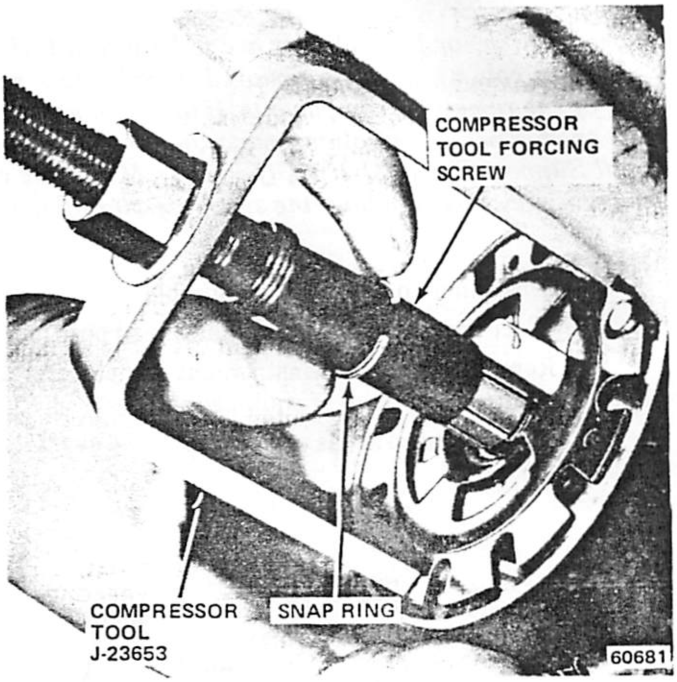

Fig. 2J-25 Steering Shaft Snap Ring Installation

(31) Connect column wiring harness connectors and install harness protector.

(32) Install steering wheel.

(33) Install and tighten steering wheel nut to 30 foot-pounds (41 N•m) torque.

CAUTION: *Some steering shafts have metric size steering wheel nut threads. If a replacement nut is being installed, identify the shaft thread type before installation. Metric shafts have an identifying groove in the steering wheel locating splines (fig. 2J-2). American thread shafts do not have this groove.*

(34) Install column bezel.

(35) Install and tighten column bracket-to-instrument panel bolts to 20 foot-pounds (27 N•m) torque.

(36) Tighten toe plate bolts to 10 foot-pounds (14 N•m) torque.

(37) Remove protective covering from column painted areas.

(38) Connect battery negative cable.

STANDARD COLUMN OVERHAUL—AUTOMATIC TRANSMISSION

Column Disassembly

NOTE: *Steering column removal is not necessary if only the lock plate cover, lock plate, steering shaft snap ring, upper bearing preload spring, canceling cam, turn* *signal switch, or lock cylinder are to be serviced. However, the column must be removed in order to service any of the remaining components. If the column must be removed, remove the column mounting bracket and install Support Fixture J-23074 (fig. 2J-5). Mount the column in a vise by clamping the support fixture flange in the vise.*

(1) Disconnect battery negative cable.

(2) Place front wheels in straight-ahead position.

(3) Remove column-to-instrument panel bezel and left air conditioning duct, if equipped.

(4) Cover painted areas of column.

(5) Remove steering wheel (fig. 2J-1).

(6) Remove lock plate cover (fig. 2J-26). Use two screwdrivers to pry cover off lock plate and out of housing.

(7) Compress lock plate and unseat steering shaft snap ring as follows:

(a) Inspect and identify steering shaft nut thread type. Metric shafts have identifying groove in steering wheel locating splines (fig. 2J-2). American thread shafts do not have this groove.

(b) If shaft has American threads, use Compressor Tool J-23653, as is, to compress lock plate and unseat snap ring (fig. 2J-6).

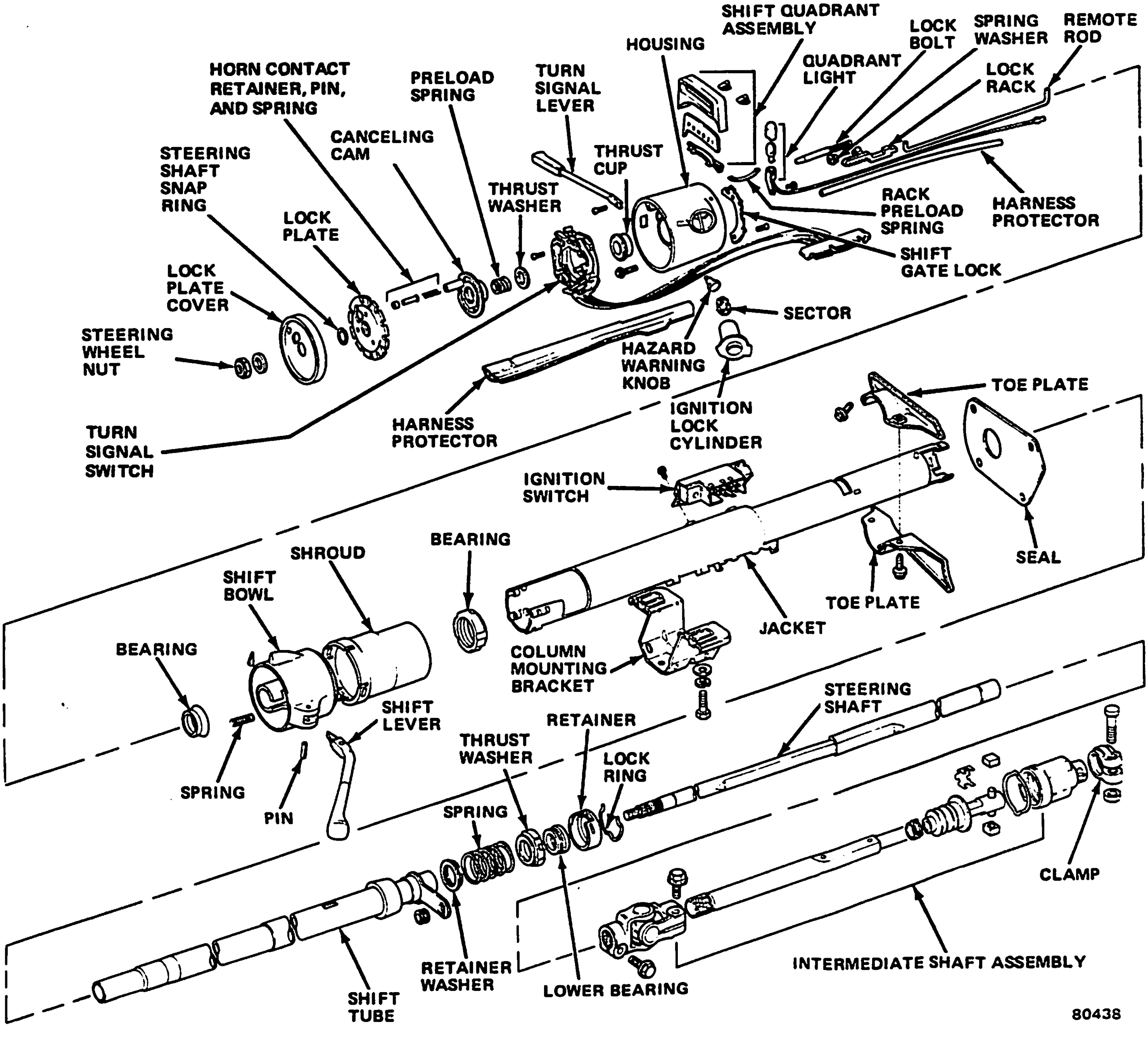

Fig. 2J-26 Steering Column—Automatic Transmission

(c) If shaft has metric nut threads, replace compressor tool standard forcing screw with Metric Forcing Screw J-23653-4 before installing tool on steering shaft.

WARNING: *The lock plate is under strong spring tension. Do not attempt to remove the snap ring without using the compressor tool.*

(8) Remove lock plate compressor tool and remove steering shaft snap ring. Discard snap ring.

CAUTION: *When the snap ring is removed, the steering shaft is free in the column. If the column is removed for bench overhaul, do not let the shaft fall out when the column is moved.*

(9) Remove lock plate, canceling cam, upper bearing preload spring, and thrust washer (fig. 2J-26).

(10) On vehicles without Cruise Command, remove turn signal lever attaching screw and remove lever.

(11) On vehicles with Cruise Command, remove wires from switch terminal. Fold two of four wires back along harness. Tape wires in place and tape length of string to harness to aid removal.

(12) Push inward on hazard warning switch knob and unthread knob in counterclockwise direction.

(13) Place gearshift lever in Park position. Remove lever retaining pin using punch and remove lever.

(14) Unhook turn signal switch wire harness connector from column.

(15) Disconnect turn signal switch harness connector from instrument panel harness connector (fig. 2J-7). Lift connector lock tab to separate connectors.

(16) Using stiff wire or paper clip, compress lock tab retaining shift quadrant light wire in connector block and disconnect wire.

(17) Remove column lower bracket and plastic harness protector.

(18) Remove column-to-instrument panel mounting bracket if turn signal switch is to be removed with column mounted in vehicle.

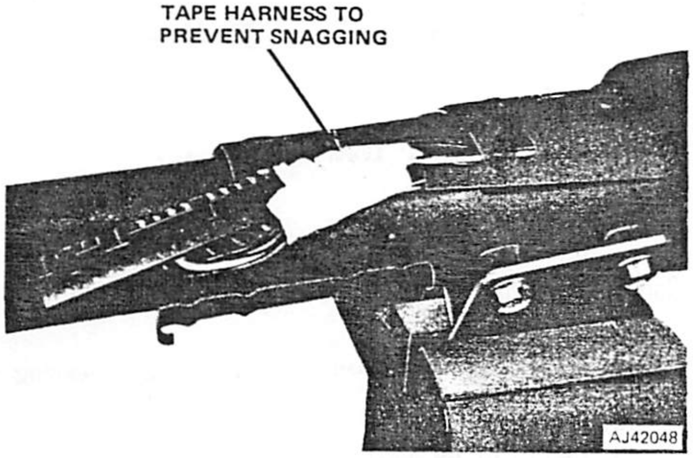

Fig. 2J-27 Turn Signal Switch Harness Removal

(19) Wrap tape around turn signal switch harness connector to prevent snagging (fig. 2J-27).

(20) Remove turn signal switch attaching screws and remove switch and harness. Pull switch straight up and out of column.

(21) On vehicles with Cruise Command, remove turn signal lever attaching screw and remove lever and switch as assembly. Guide switch harness out of column using string previously taped to harness.

(22) Place lock cylinder in LOCK position. Compress lock cylinder retaining tab and remove lock cylinder (fig. 2J-9).

NOTE: *The retaining tab is accessible through the tab slot in the housing (fig. 2J-9). If the tab is not visible through the slot, scrape or knock all casting flash from the slot.*

(23) Remove ignition switch from lower end of column.

(24) Remove upper housing attaching screws and remove upper housing.

NOTE: *The remote rod and shift quadrant light wire, if equipped, will be removed as an assembly along with the upper housing.*

(25) Remove thrust cup from upper housing (fig. 2J-28).

(26) Remove lock bolt and lock rack and remove rack preload spring (fig. 2J-29).

(27) Remove lock sector from sector shaft using blunt punch (fig. 2J-19). Note lock sector position for assembly reference and remove sector through lock cylinder hole in housing.

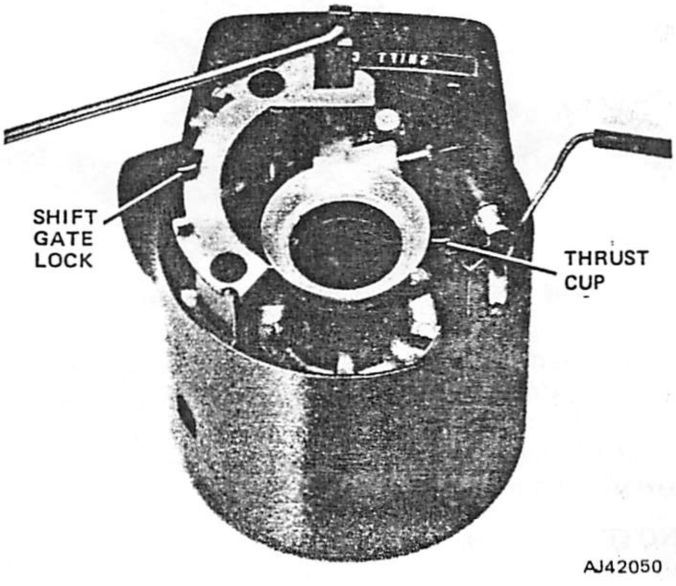

Fig. 2J-28 Thrust Cup Position

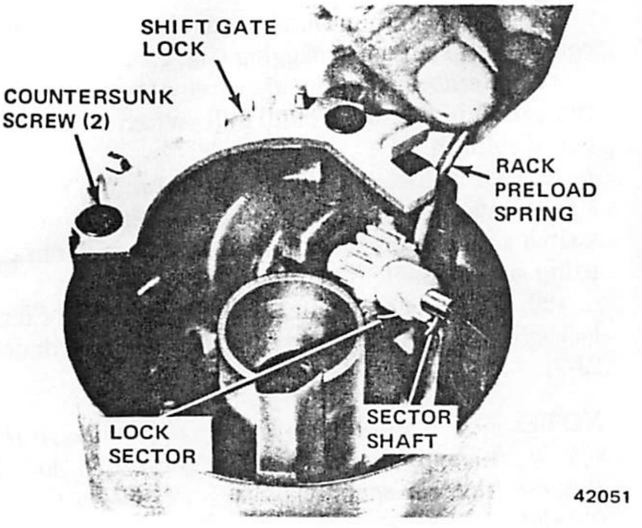

Fig. 2J-29 Housing Components

(28) Remove shift gate lock from upper housing. Examine shift gate lock detents for wear. Replace lock if excessively worn.

(29) Remove shift quadrant. Quadrant is retained by two clips which must be pried out with small punch (fig. 2J-30).

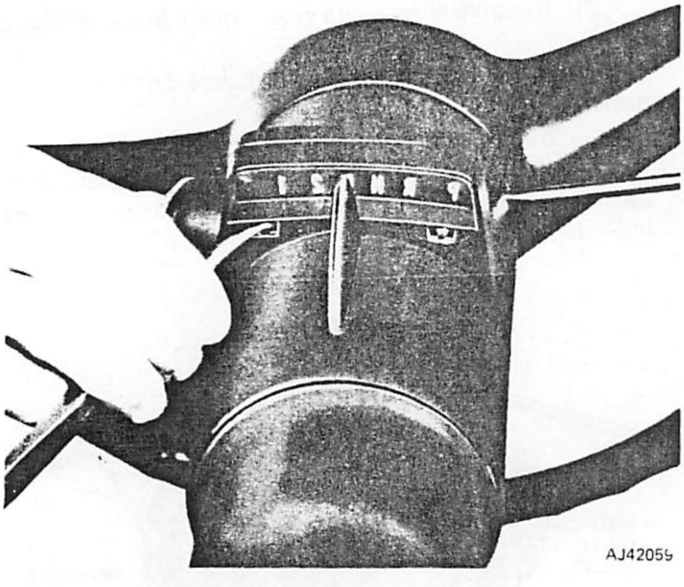

Fig. 2J-30 Shift Quadrant Retainer Clip Removal

(30) Remove shift quadrant light cover. Remove screw retaining socket assembly and remove assembly.

(31) Remove shift bowl from column jacket.

(32) Remove nylon lower bowl bearing from upper end of column tube (fig. 2J-31).

NOTE: *Although the preceding steps are performed with the column mounted in the vehicle, the following steps can be performed only after the column has been removed.*

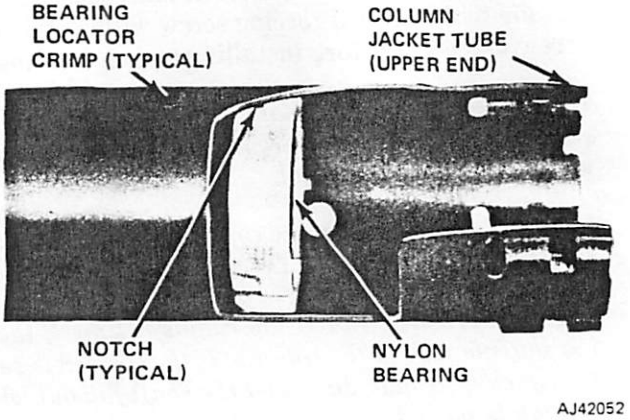

Fig. 2J-31 Shift Bowl Lower Bearing Position

(33) Remove column from vehicle. Refer to Steering Column Removal.

(34) Remove steering shaft from lower end of column.

(35) Remove lower bearing retainer, retainer ring, lower bearing preload spring, and nylon washer (fig. 2J-32).

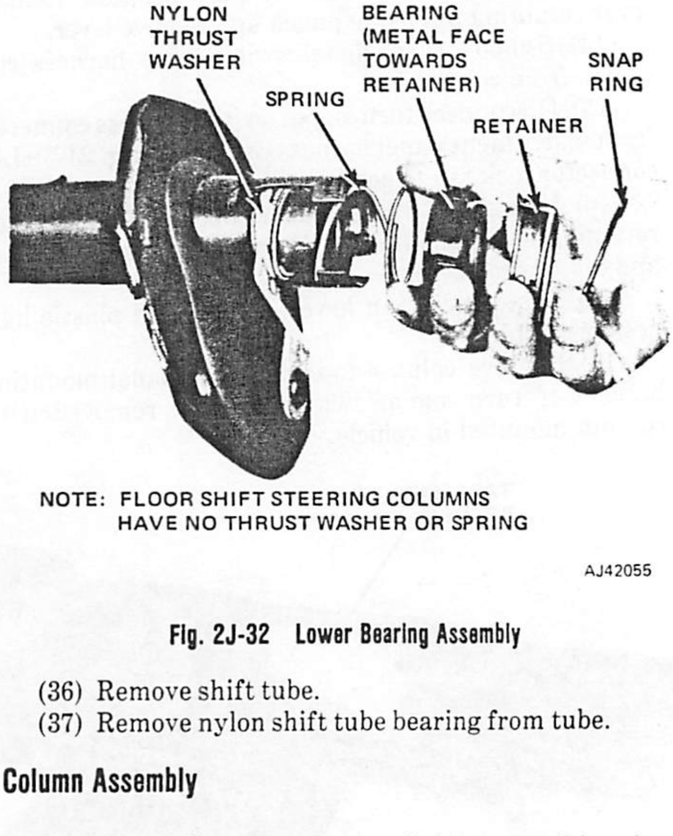

Fig. 2J-32 Lower Bearing Assembly

(36) Remove shift tube.

(37) Remove nylon shift tube bearing from tube.

Column Assembly

(1) Apply chassis grease to all friction and bearing surfaces.

(2) Install shift tube.

(3) Install nylon washer in lower end of shift tube with flat side of washer facing upper end of tube (fig. 2J-32).

(4) Install preload spring, lower bearing (with metal face toward retainer), bearing retainer, and retainer ring.

(5) Install nylon lower bowl bearing in upper end of jacket.

NOTE: *The bearing must be installed with the smaller inside diameter facing the lower end of the jacket, and with the bearing notches engaged in the three locator crimps in the column (fig. 2J-31).*

(6) Align shift bowl with shift tube spline and install bowl.

(7) Install rack preload spring in upper housing (fig. 2J-29).

(8) Position large end of sector on sector shaft and press sector in place using blunt punch (fig. 2J-17).

(9) Install shift gate lock and install two countersunk attaching screws (fig. 2J-28). Tighten screws to 45 inch-pounds (5 N•m) torque.

(10) Install shift quadrant lamp and lamp cover.

(11) Install shift quadrant indicator and press retainer clips into place with flat side toward bowl.

(12) Assemble lock bolt and lock rack (fig. 2J-18).

(13) Install assembled lock bolt and lock rack in shift bowl (fig. 2J-33).

NOTE: *The block tooth of the lock rack must engage the block tooth of the sector (fig. 2J-19).*

(14) Install nylon thrust cup in upper housing with flared end of cup facing outward (fig. 2J-28).

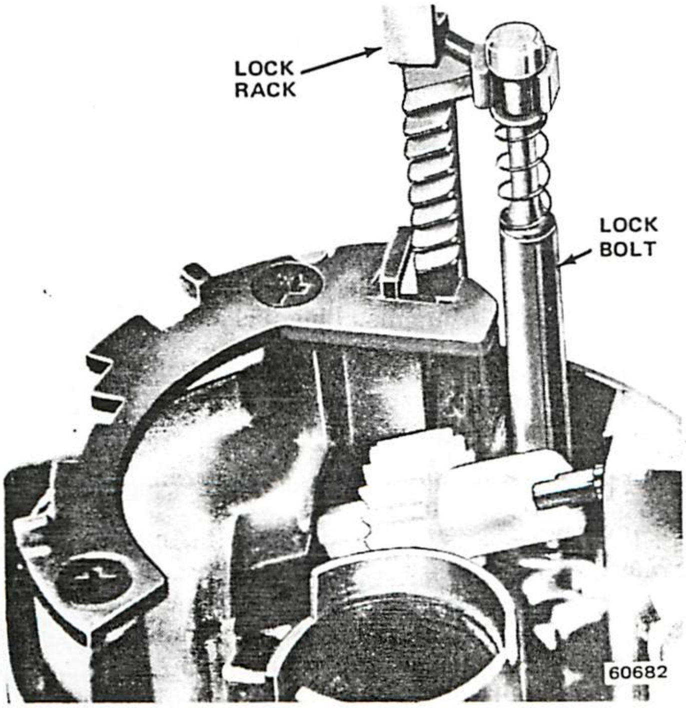

Fig. 2J-33 Lock Rack and Lock Bolt Installation

(15) Rotate shift bowl counterclockwise to stop and install upper housing. Tighten housing attaching screws to 60 inch-pounds (7 N•m) torque.

NOTE: *The shift bowl must be in the Park position and the rack pulled downward before the upper housing can be installed.*

(16) Guide shift quadrant lamp wire and remote lock rod into position between shift bowl and column jacket.

(17) Install turn signal switch and harness assembly in column.

(18) Remove tape from turn signal switch wire harness connector and position harness in protector and protector-to-column jacket.

(19) Install turn signal switch retaining screws. Be sure switch actuating lever pivot is correctly aligned and seated in upper housing pivot boss before installing screws.

(20) On vehicles without Cruise Command, install turn signal lever and lever attaching screw. Tighten screw to 35 inch-pounds (4 N•m) torque.

(21) On vehicles with Cruise Command, install turn signal lever and switch assembly. Guide wires into housing using string previously taped in place. Remove string and tape. Connect wires to switch terminals. Install lever attaching screw and tighten screw to 35 inch-pounds (4 N•m) torque.

(22) Install steering shaft, if removed. Install shaft through lower end of column and into upper bearing.

(23) Install thrust washer, upper bearing preload spring, and canceling cam on upper end of steering shaft.

(24) Align lock plate splines with steering shaft splines and install lock plate. Be sure canceling cam shaft protrudes through opening in lock plate (fig. 2J-34).

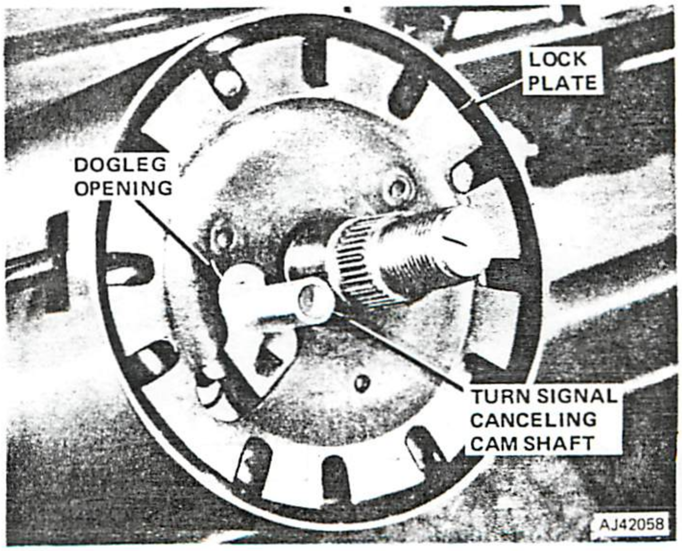

Fig. 2J-34 Canceling Cam and Lock Plate Position

(25) Install replacement steering shaft snap ring on sleeve of Lock Plate Compressor Tool J-23653 and install tool on steering shaft (fig. 2J-25).

CAUTION: *Inspect and identify the steering shaft nut thread type before installing the compressor tool. If the shaft has metric threads (fig. 2J-2), be sure to replace the compressor tool standard forcing screw with Metric Forcing Screw J-23653-4 before installing the tool on the shaft.*

(26) Compress lock plate and seat snap ring in steering shaft groove.

(27) Remove compressor tool.

(28) Install lock plate cover.

(29) Align canceling cam and index marks on steering shaft and steering wheel and install steering wheel. Tighten steering wheel nut to 30 foot-pounds (41 N•m) torque.

CAUTION: *Some steering shafts have metric threads. Be sure to obtain and install the proper thread-type nut. Metric thread shafts have an identifying groove in the steering wheel locating splines (fig. 2J-2).*

(30) Install hazard warning light switch knob and steering wheel trim cover.

(31) Install gearshift lever.

(32) Install lock cylinder in housing.

(33) Place shift bowl in any position except Park and rotate bowl counterclockwise until lock rack bottoms against lower surface of bowl.

(34) Install ignition switch on column:

(a) Move switch slider toward left to Accessory position.

(b) Move slider two positions toward right to Off-Unlock position (fig. 2J-35).

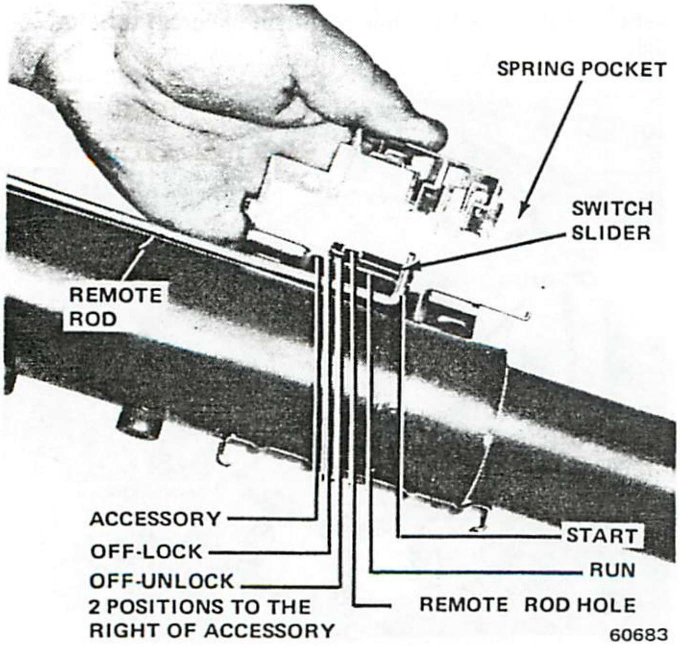

Fig. 2J-35 Positioning Ignition Switch

(c) Insert remote rod into slider hole and attach ignition switch to column. Tighten switch attaching screws to 35 inch-pounds (4 N•m) torque.

(35) Install column if removed. Refer to Steering Column Installation.

(36) Install lower finish panel, air conditioning duct if equipped, and column-to-instrument panel bezel.

(37) Remove protective covering from painted areas of column.

(38) Connect battery negative cable.

TILT COLUMN OVERHAUL—CHEROKEE-WAGONEER-TRUCK MODELS

Column Disassembly

NOTE: *Although it is possible to disassemble the tilt steering column down to the housing with the column in the vehicle, the column must be removed if more extensive disassembly is necessary. If the column is removed, use Steering Column Support Fixture J-23074 to mount the column assembly in a vise (fig. 2J-5).*

(1) Place front wheels in straight-ahead position.

(2) Disconnect battery negative cable.

(3) Cover painted areas of column.

(4) Remove steering wheel.

(5) Remove gearshift lever retaining pin and remove gearshift lever.

(6) Remove lock plate cover. Use two screwdrivers to pry cover off lock plate and out of housing.

(7) Compress lock plate and unseat steering shaft snap ring as follows:

(a) Inspect and identify steering shaft nut thread type. Metric shafts have identifying groove in steering wheel locating splines (fig. 2J-2). American thread shafts do not have this groove.

(b) If shaft has American threads, use Compressor Tool J-23653 as is to compress lock plate and unseat snap ring (fig. 2J-6).

(c) If shaft has metric threads, replace compressor tool standard forcing screw with Metric Forcing Screw J-23653-4 before installing tool on steering shaft.

WARNING: *The lock plate is under strong spring pressure. Do not attempt to remove the lock plate without using the compressor tool.*

(8) Remove compressor tool and steering shaft snap ring. Discard snap ring.

(9) Remove lock plate, canceling cam, upper bearing preload spring, spring seat, and bearing race.

(10) On vehicles without Cruise Command, remove turn signal lever attaching screw and remove lever.

(11) On vehicles with Cruise Command, remove wires from switch terminal in lever. Fold two of four switch wires back, along harness and tape wires in place. Tape length of string to harness to aid removal.

(12) Press hazard warning light switch knob inward and remove knob by turning counterclockwise.

(13) Unhook turn signal switch wire harness connector from mounting bracket on lower right side of column jacket.

(14) Loosen toeplate bolts.

(15) Remove bolts attaching column mounting bracket to steering column.

(16) Remove bolts attaching mounting bracket to instrument panel and remove mounting bracket.

(17) Remove wire harness plastic protector from column jacket.

(18) Wrap tape around harness connector to prevent snagging (fig. 2J-27).

(19) Remove turn signal switch retaining screws and remove switch and wire harness. Pull switch straight up and out of column.

(20) On vehicles with Cruise Command, remove turn signal lever attaching screw and remove lever and switch. Guide switch wire harness out of column using string previously taped to harness.

(21) Insert ignition key in lock cylinder and turn cylinder to LOCK position.

(22) Compress lock cylinder retaining tab and remove lock cylinder (fig. 2J-9).

NOTE: *The retaining tab is accessible through the tab slot in the housing (fig. 2J-9). If the tab is not visible through the slot, remove all casting flash from the slot.*

(23) Remove spring clips retaining shift quadrant using punch or long needlenose pliers and remove quadrant (fig. 2J-30).

(24) Remove shift quadrant mounting bracket and light socket.

(25) Remove tilt lever.

(26) Remove cover retaining screws and remove cover from column.

(27) Remove lock sector tension spring retaining screw. Unhook spring from lock sector shaft and remove spring.

(28) Remove snap ring from lock sector shaft and remove lock sector, sector shaft, and retaining ring.

(29) Install tilt lever and place upper housing in full upward tilt position.

(30) Insert screwdriver in tilt spring retainer slot and compress retainer approximately 3/16 inch (4.7 mm). Rotate retainer 1/8 turn counterclockwise and remove retainer and spring.

WARNING: *The tilt spring is under strong spring tension.*

(31) Place housing in center (nontilt) position.

(32) Remove housing pivot pins using tool J-21854-1 (fig. 2J-36).

(33) Lift tilt lever to disengage lock shoes and remove housing. Remove both ball bearing assemblies from housing if bearings are to be replaced.

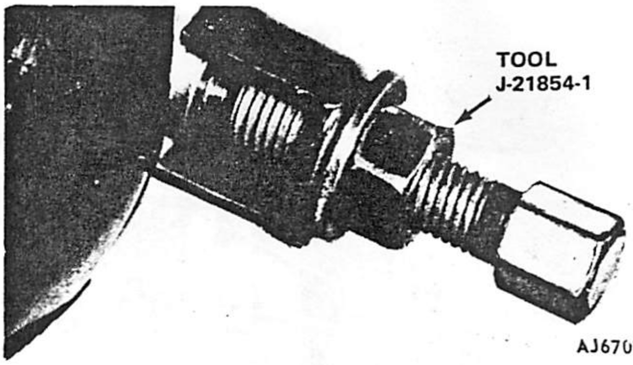

Fig. 2J-36 Pivot Pin Removal

(34) Remove tilt lever.

(35) Remove release lever pin from housing using pin punch or tool J-22635 (fig. 2J-37).

NOTE: *When removing the release lever pin, compress the lock shoe springs to relieve spring tension on the pin.*

(36) Remove lock shoe pin from housing using pin punch or tool J-22635 (fig. 2J-38).

NOTE: *When removing the lock shoe pin, compress the lock shoe springs to relieve spring tension on the pin (fig. 2J-38).*

(37) Remove lock shoes and lock shoe springs.

(38) Disconnect steering shaft at intermediate shaft coupling. Remove steering shaft through upper end of column.

(39) Disassemble steering shaft by folding shaft at 90° and separating upper and lower halves of shaft at flexible joint (fig. 2J-39).

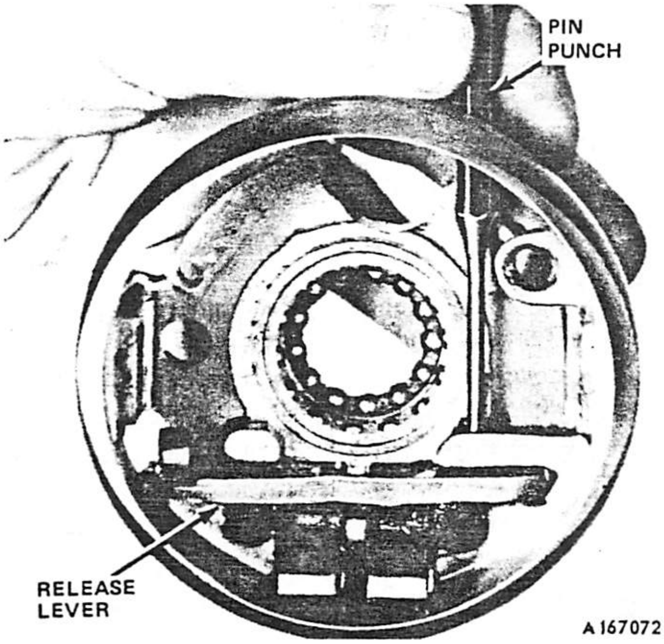

Fig. 2J-37 Release Lever Pin Removal

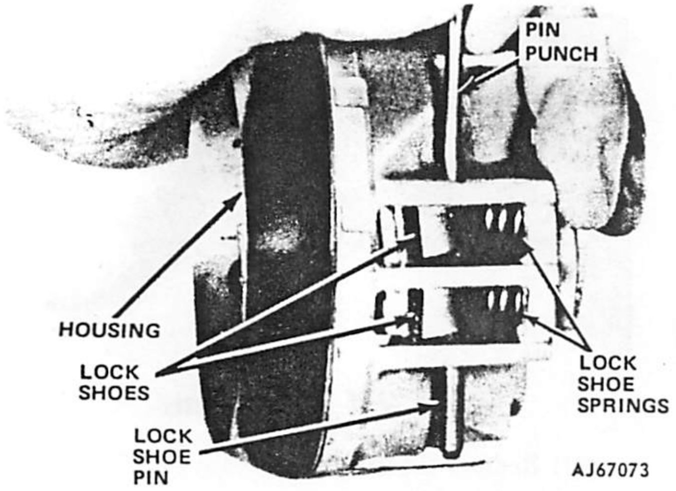

Fig. 2J-38 Lock Shoe Pin Removal

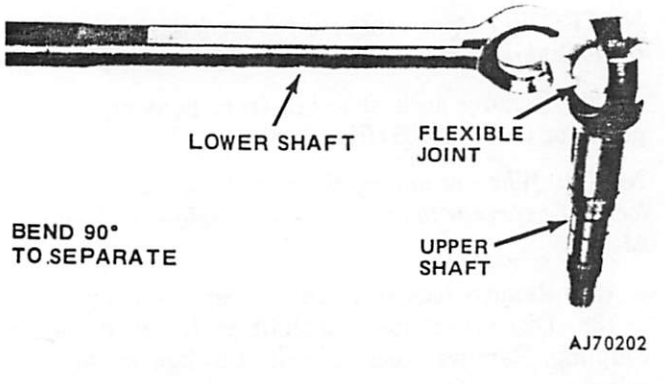

Fig. 2J-39 Steering Shaft Assembly

(40) Remove ignition switch.

(41) Remove lock rack and remote rod.

(42) Remove lower bearing retainer snap ring and remove retainer, bearing, and adapter.

(43) Remove screws attaching support to shift bowl and remove support. Use 1/4-inch, 12-point deep socket to remove screws.

(44) Remove shift gate screws and remove shift gate from support.

(45) Remove shift tube retaining ring and thrust washer.

(46) Remove shift tube from column jacket using Shift Tube Remover Tool J-23072 (fig. 2J-40).

(47) Remove retainer plate by rotating shift bowl clockwise, sliding plate out of jacket notches, tipping it down toward shift bowl hub at 12 o'clock position and removing plate-bottom side first (fig. 2J-41).

(48) Remove wave washer and shift tube spring.

(49) Remove shift bowl from column jacket.

(50) Remove lower bearing retainer spring clip (fig. 2J-42).

(51) Remove lower bearing retainer and remove lower bearing, and bearing adaptor assembly.

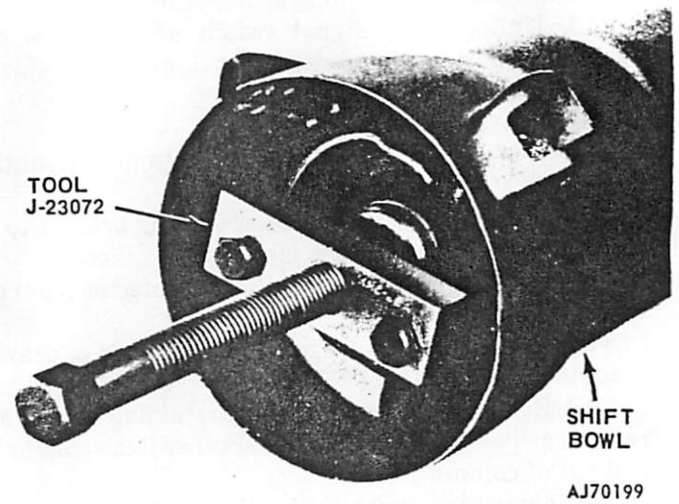

Fig. 2J-40 Shift Tube Removal

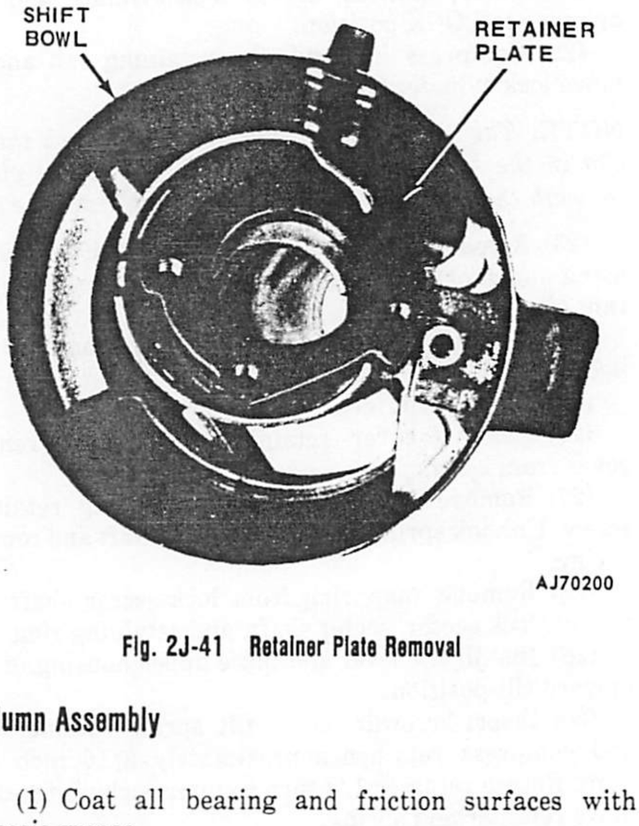

Fig. 2J-41 Retainer Plate Removal

Column Assembly

(1) Coat all bearing and friction surfaces with chassis grease.

(2) Mount shift bowl on column jacket.

(3) Install shift tube spring, wave washer, and retainer plate in shift bowl.

(4) Install shift tube through lower end of column jacket and align tube spline with shift bowl keyway.

(5) Insert Installer Tools J-23073-2 and -4 in shift tube (fig. 2J-43). Spring-loaded lower foot of tool must engage shift tube inner shoulder and tool guide must be seated in shift tube.

(6) Tighten tool spring tension nut to snug fit.

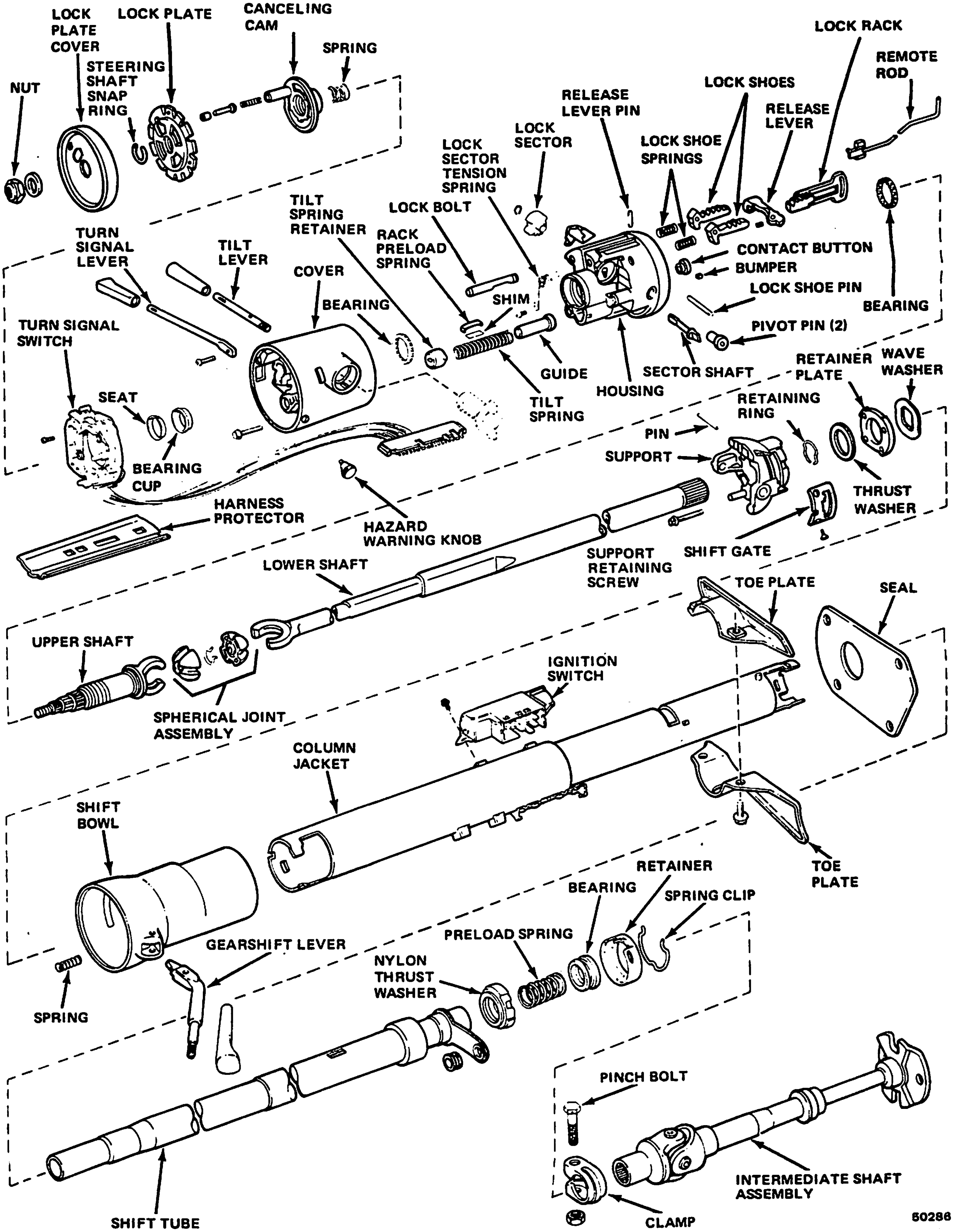

Fig. 2J-42 Tilt Steering Column—Cherokee-Wagoneer-Truck Models

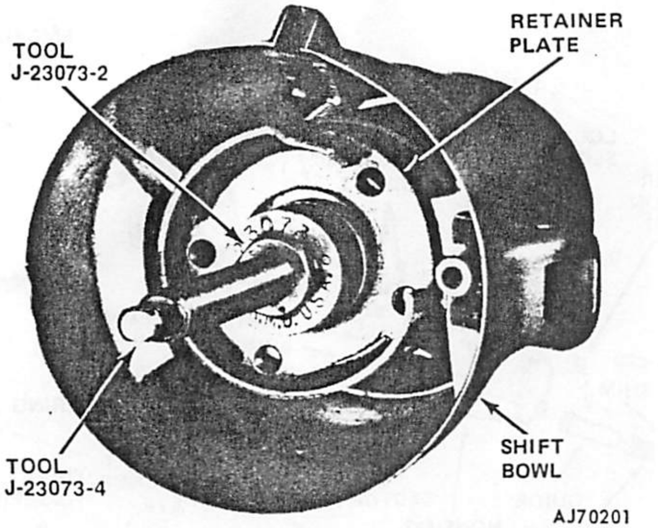

Fig. 2J-43 Positioning Shift Tube Installer Tools

(7) Place Receiver Tools J-23073-3 and -4 over puller stud and tighten Tool Nut J-23073-2 to pull tube into shift bowl (fig. 2J-44).

(8) Remove shift tube installer tools.

(9) Install shift tube thrust washer and retainer plate snap ring.

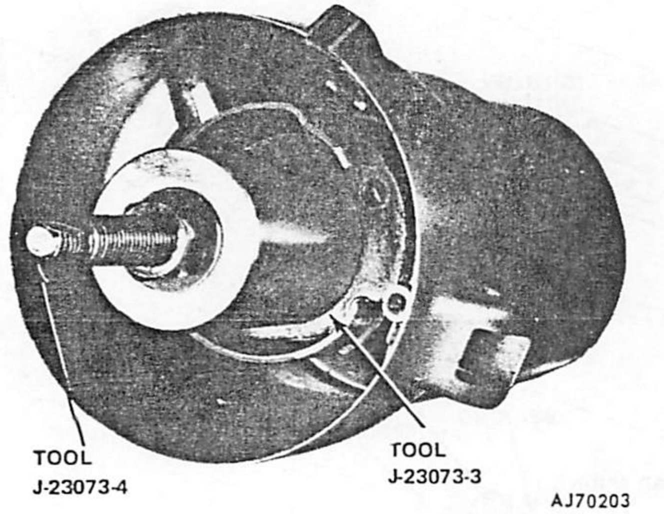

Fig. 2J-44 Pulling Shift Tube Into Shift Bowl

(10) Install lower bearing adaptor with notched end of adaptor facing lower end of column.

(11) Install lower bearing in column with metal face of bearing toward lower end of column.

(12) Install lower bearing retainer and retainer spring clip (fig. 2J-42).

(13) Install shift gate in support and install shift gate attaching screws.

(14) Install support in shift bowl. Align V-notch in support with notch in column jacket (located at 9 o'clock position).

(15) Install support attaching screws.

(16) Assemble steering shaft.

(17) Install steering shaft through upper end of column.

(18) Install replacement ball bearings in housing if removed. Be sure there are 14 balls in each bearing.

(19) Install tilt handle.

(20) Insert ignition switch remote rod between shift-bowl and column jacket, and into guide channel in left side of support.

(21) Engage lock rack in remote rod (fig. 2J-45).

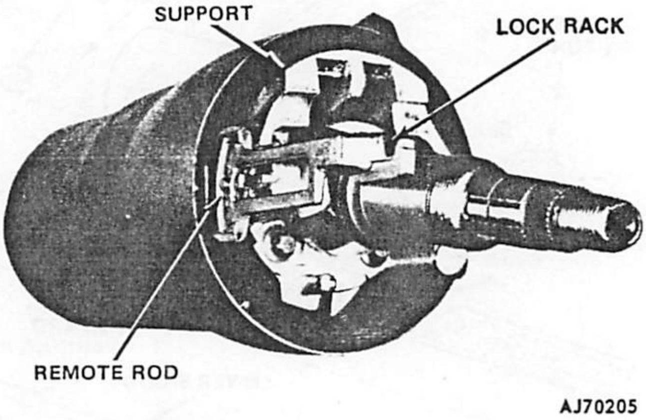

Fig. 2J-45 Lock Rack and Remote Rod Position

(22) Guide housing over steering shaft and lock rack and align lock shoes with teeth in support.

(23) Align housing and support pivot pin holes and install pivot pins using fiber mallet or brass drift.

(24) Install lock shoes, lock shoe springs, tilt bumpers, and lockpin in housing.

(25) Install sector shaft in housing and install lock sector on shaft. Large block tooth on sector must engage large slot in lock rack.

(26) Install lock sector retaining snap ring.

(27) Hook lock sector tension spring on lock bolt, engage spring in sector, and install spring retaining screw (fig. 2J-46).

(28) Place housing in full upward tilt position and install tilt spring and guide in housing.

(29) Install tilt spring retainer over spring and into housing. Press retainer downward approximately 3/16 inch (4.7 mm) and rotate approximately 1/8-turn clockwise to secure retainer tabs in housing lugs.

(30) Place housing in neutral (nontilt) position and remove tilt handle.

(31) Install cover on housing and install cover attaching screws. Tighten screws to 35 inch-pounds (4 N•m) torque.

(32) Guide shift quadrant light wire through housing and between shift bowl and column jacket.

(33) Install shift quadrant mounting bracket and attach light socket.

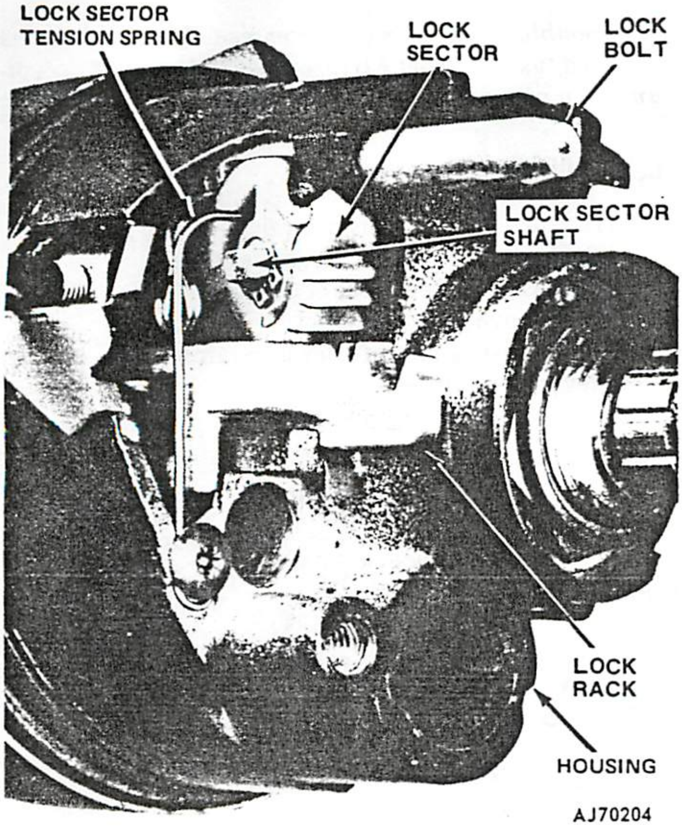

Fig. 2J-46 Lock Sector and Tension Spring Position

(34) Hook base of shift quadrant over tabs on left side of retainer and place in position.

(35) Install shift quadrant pointer in shift bowl and engage pointer in quadrant.

(36) Install quadrant retainer clips so flat side of clips face downward.

(37) Reinstall tilt handle.

(38) Install turn signal switch and switch harness in column. Guide switch wire harness between cover and column jacket.

(39) On vehicles without Cruise Command, install turn signal lever and lever attaching screw. Tighten screw to 35 inch-pounds (4 N•m) torque.

(40) On vehicles with Cruise Command, install turn signal lever and switch assembly. Guide switch wire harness into cover using string previously taped to harness. Remove tape from harness and connect wires to switch terminal. Install lever attaching screw and tighten screw to 35 inch-pounds (4 N•m) torque.

(41) Remove tape from turn signal switch harness connector and position wires in column harness protector.

(42) Align turn signal switch in cover and install switch attaching screws. Tighten screws to 35 inch-pounds (4 N•m) torque.

NOTE: *Be sure the switch actuating lever pivot is correctly aligned and seated in the housing pivot boss before installing the switch attaching screws.*

(43) Install mounting bracket on column. Tighten bracket-to-column bolts to 20 foot-pounds (27 N•m) torque.

(44) Position column mounting bracket on instrument panel and install bracket-to-instrument panel attaching bolts. Tighten bolts to 20 foot-pounds (27 N•m) torque.

(45) Tighten toeplate bolts to 10 foot-pounds (14 N•m) torque.

(46) Install upper bearing race, bearing seat, preload spring, and canceling cam on steering shaft.

(47) Align lock plate splines with steering shaft splines and install lock plate. Canceling cam shaft must protrude through opening in lock plate (fig. 2J-34).

(48) Install replacement steering shaft snap ring on sleeve of Compressor Tool J-23653 and install tool on steering shaft (fig. 2J-25).

CAUTION: *Identify the steering shaft nut thread type before installing the compressor tool on the shaft. If the shaft has American threads, use the compressor tool as is. However, if the shaft has metric threads (fig. 2J-2), replace the compressor tool standard forcing screw with Metric Forcing Screw J-23653-4 before using the tool.*

(49) Compress lock plate and seat snap ring in steering shaft groove (fig. 2J-25).

(50) Connect steering shaft to intermediate shaft coupling.

(51) Install gearshift lever in shift bowl. Guide lever over lock sector tension spring and into bowl. Align lever retaining pin holes with pin punch and install retaining pin using fiber mallet or brass drift.

(52) Install lock cylinder as follows:

(a) Insert ignition key in lock cylinder.

(b) Hold lock cylinder and turn key clockwise until it stops.

(c) Align cylinder retainer tab with keyway in cover and insert cylinder in cover.

(d) Push lock cylinder against lock sector. Rotate cylinder counterclockwise until cylinder engages in sector and push cylinder inward until cylinder retainer tab snaps into place.

(53) Install steering wheel. Tighten steering wheel nut to 30 foot-pounds (41 N•m) torque.

CAUTION: *Some steering shafts have metric size steering wheel nut threads. Be sure to install the proper thread-type nut. Metric shafts have an identifying groove in the steering wheel locating splines (fig. 2J-2). Shafts with American threads do not have this groove.*

(54) Install column, if removed. Refer to Steering Column Installation. However, if column was serviced in vehicle, proceed to following steps.

(55) Install and tighten column mounting bracket bolts to 20 foot-pounds (27 N•m) torque.

(56) Position column mounting bracket on instrument panel and install panel-to-bracket nuts. Tighten nuts to 20 foot-pounds (27 N•m) torque.

(57) Install column bezel.

(58) Tighten toeplate screws to 10 foot-pounds (14 N•m) torque.

(59) Remove protective covering from column painted areas.

(60) Connect battery negative cable.

TILT COLUMN OVERHAUL—CJ AND SCRAMBLER MODELS

NOTE: *Although the tilt column (fig. 2J-47) can be disassembled down to the housing with the column mounted in the vehicle, the column must be removed if disassembly is to be more extensive. If the column is removed, use Support Fixture J-23074 to mount the column in a vise for service operations (fig. 2J-5).*

Column Disassembly

(1) Place front wheels in straight-ahead position.

(2) Disconnect battery negative cable.

(3) Cover painted areas of column.

(4) Remove steering wheel.

(5) Remove gearshift lever retaining pin and remove lever, if equipped.

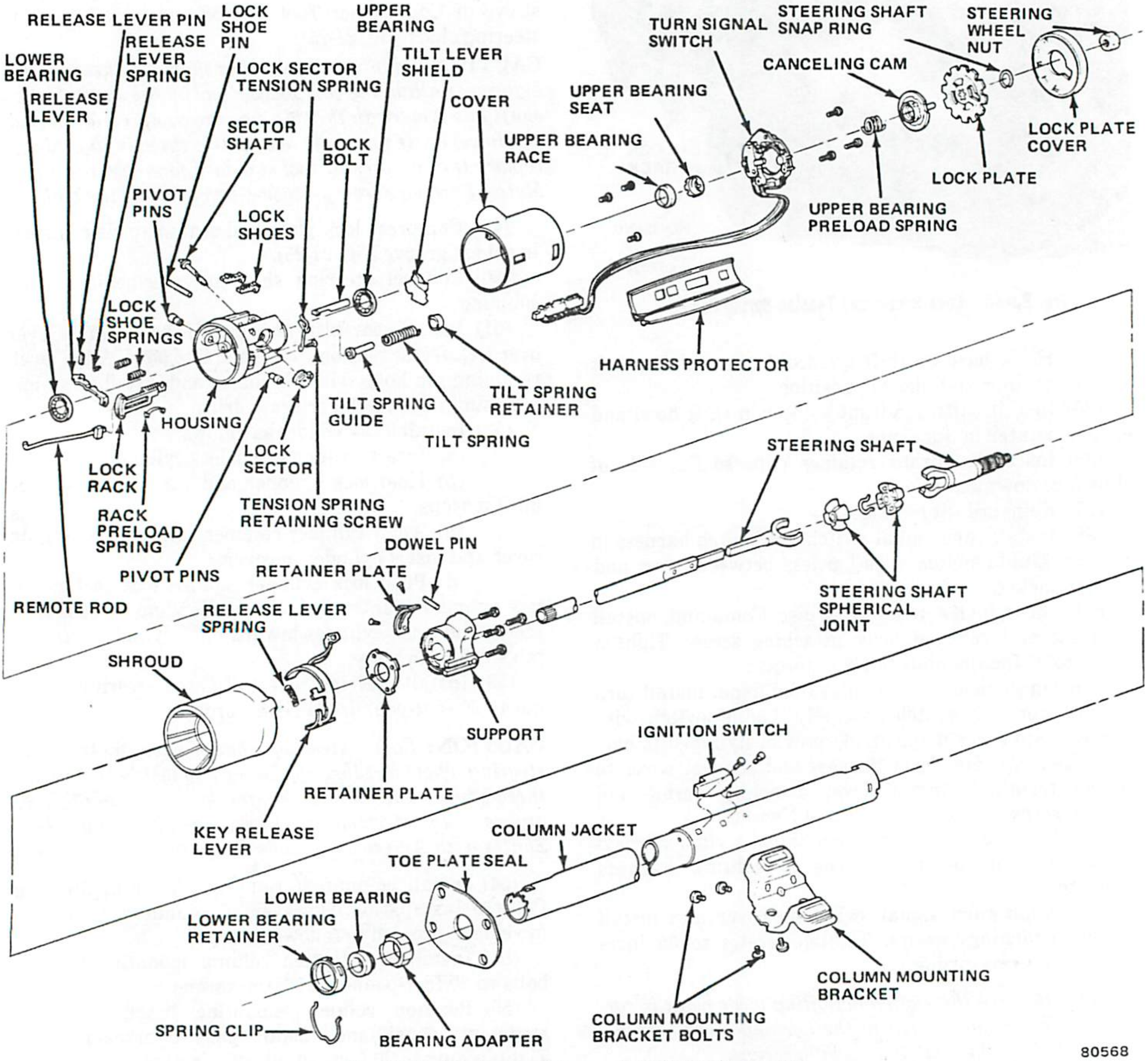

Fig. 2J-47 Tilt Steering Column—CJ and Scrambler Models

(6) Remove lock plate cover. Use two screwdrivers to pry cover off plate and out of column.

(7) Remove tilt and turn signal levers.

(8) Remove hazard warning knob. Press knob inward and turn in counterclockwise direction to remove.

(9) Compress lock plate and unseat steering shaft snap ring as follows:

(a) Inspect and identify steering shaft nut thread type. Metric shafts have identifying groove in steering wheel locating splines (fig. 2J-2). American thread shafts do not have this groove.

(b) If shaft has American threads, use tool J-23653, as is, to compress lock plate and unseat steering shaft snap ring (fig. 2J-6).

(c) If shaft has metric threads, replace compressor tool standard forcing screw with Metric Forcing Screw J-23653-4 before using compressor tool.

WARNING: *The lock plate is under strong spring pressure. Do not attempt to remove the snap ring without using the compressor tool.*

(10) Remove compressor tool and snap ring. Discard snap ring.

(11) Remove lock plate, canceling cam, and upper bearing preload spring (fig. 2J-47).

(12) Disconnect turn signal switch harness at lower right side of column jacket.

(13) Loosen all toeplate screws.

(14) Remove bolts attaching column mounting bracket to column jacket.

(15) Remove nuts attaching column mounting bracket to instrument panel bolts and remove mounting bracket.

(16) Remove wire harness protector from column jacket (fig. 2J-48).

(17) Wrap tape around harness connector to prevent snagging connector when removed (fig 2J-49).

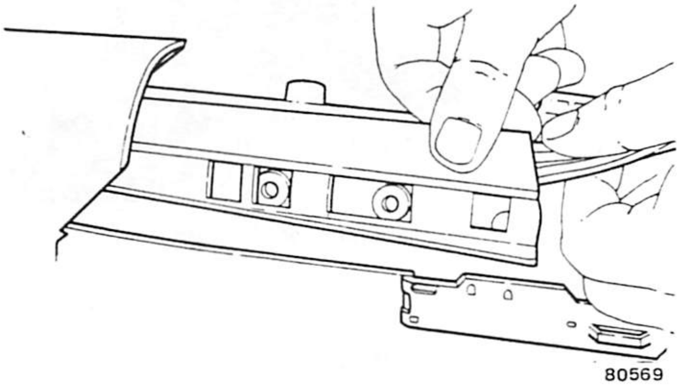

Fig. 2J-48 Harness Protector Removal

(18) Remove turn signal switch attaching screws and remove switch and harness. Pull switch straight up and out of column.

(19) Insert ignition key in ignition lock cylinder and turn cylinder to On position.

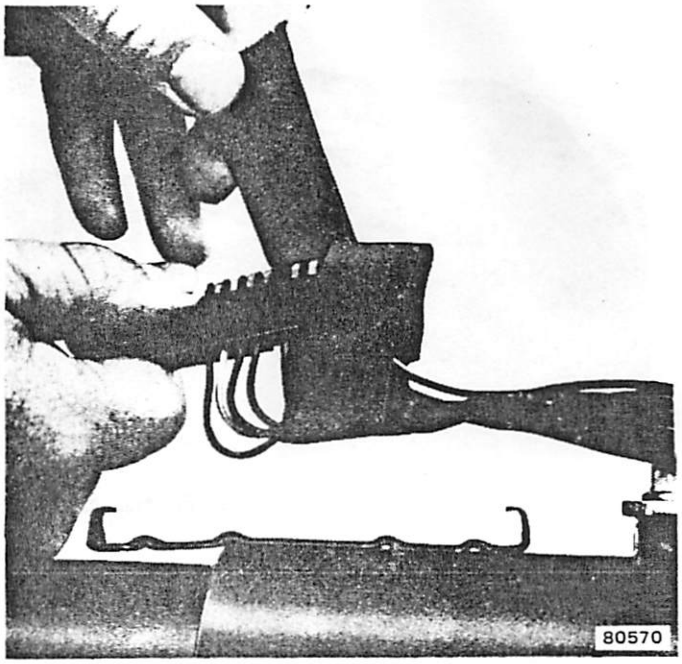

Fig. 2J-49 Taping Harness Connector

(20) Compress ignition lock cylinder retaining tab using thin bladed screwdriver and remove cylinder from column.

NOTE: *The retaining tab is accessible through the slot adjacent to the turn signal switch mounting boss (fig. 2J-9). If the tab is not visible through the slot, scrape or knock any casting flash out of the slot to provide access.*

(21) Remove cover retaining screws and remove cover from column (fig. 2J-50).

(22) Remove upper bearing race and bearing seat from steering shaft (fig. 2J-51).

(23) Reinstall tilt lever and place column in full upward tilt position.

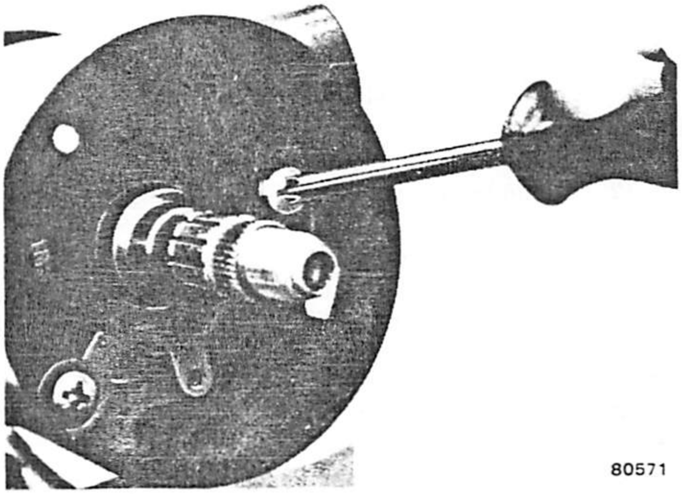

Fig. 2J-50 Cover Removal

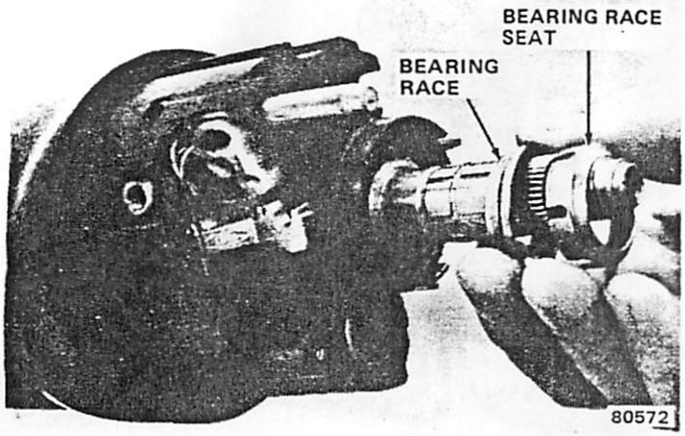

Fig. 2J-51 Upper Bearing Race and Seat Removal/Installation

(24) Remove tilt spring, guide, and retainer using screwdriver (fig. 2J-52). Press retainer inward and turn it counterclockwise until retainer tabs align with housing lugs. Be sure screwdriver blade just fits into retainer slot.

WARNING: *The tilt spring guide is under strong spring pressure.*

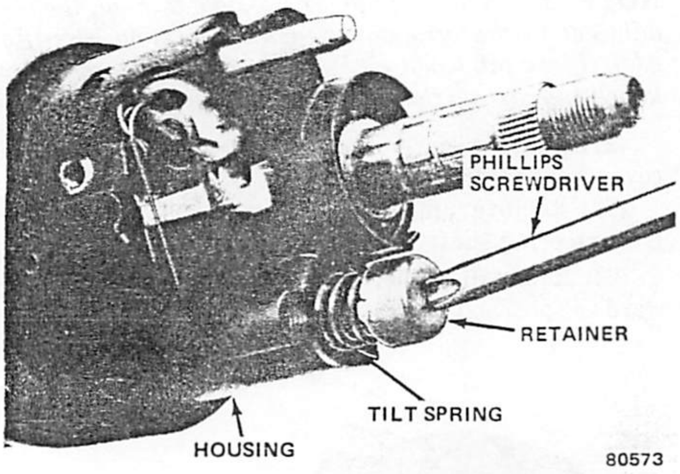

Fig. 2J-52 Tilt Spring and Guide Removal

(25) Place housing in center (nontilt) position.

(26) Remove housing pivot pins using tool J-21854-1 (fig. 2J-36).

(27) Raise tilt lever to disengage lock shoes and remove housing (fig. 2J-53). Pull housing upward to disengage shoes and turn housing to one side to separate lock rack from remote rod.

(28) Remove tilt lever from housing.

(29) Remove tilt lever shield from housing (fig. 2J-54).

(30) Remove lock sector spring retaining screw and remove spring (fig. 2J-55). Rotate spring in clockwise direction to remove it from bolt.

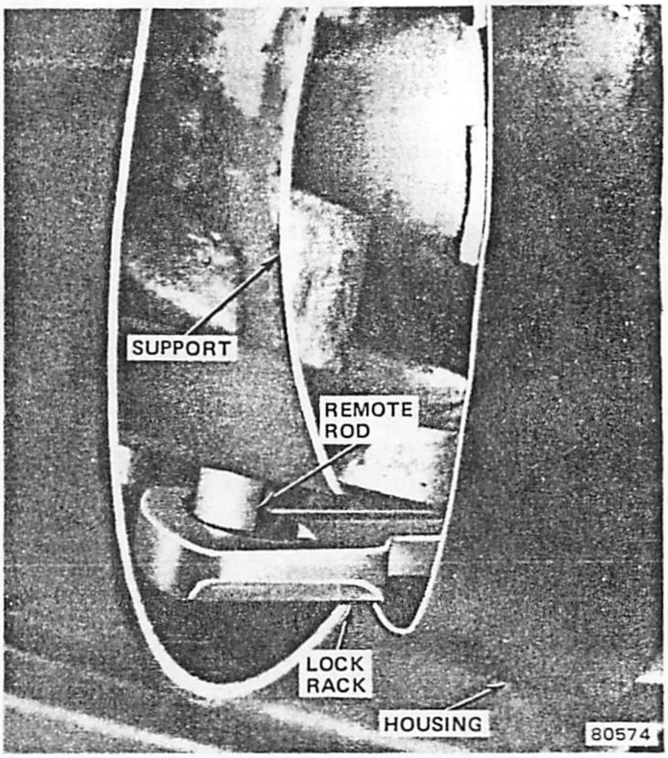

Fig. 2J-53 Housing Removal

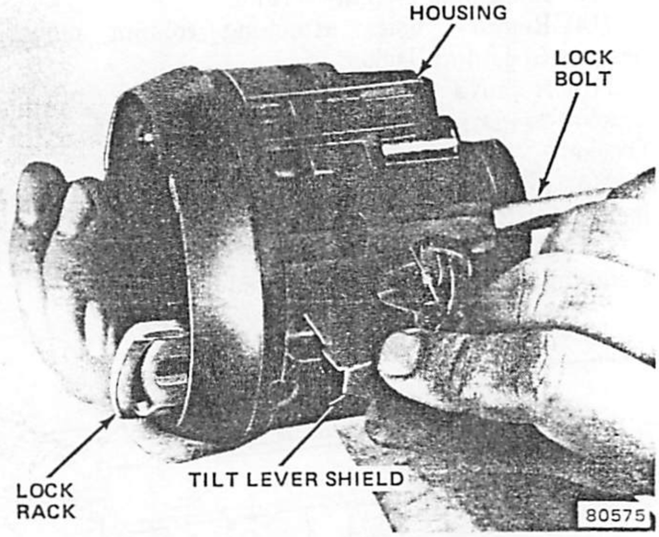

Fig. 2J-54 Tilt Lever Shield Removal

(31) Remove lock sector retaining ring (fig. 2J-55).

(32) Remove lock sector and sector shaft. Tap shaft through sector and out of housing using hammer and punch (fig. 2J-56).

(33) Remove lock bolt, lock rack, rack preload spring, spring shim, if equipped, and remote rod from housing.

(34) Insert wedge between lock shoes and housing to relieve spring tension on tilt and lock shoe pins (fig. 2J-57).

(35) Remove tilt lever pin from housing using tool J-22635 or pin punch (fig. 2J-37).

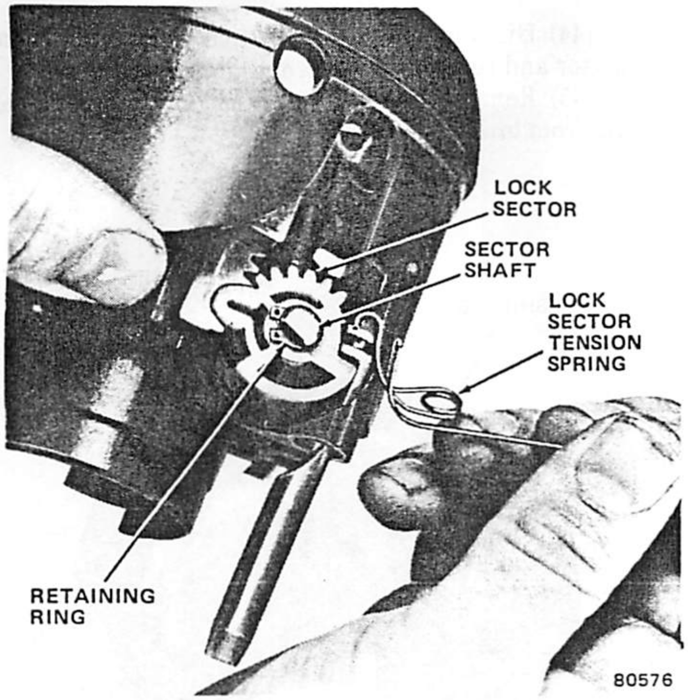

Fig. 2J-55 Lock Sector Tension Spring Removal/Installation

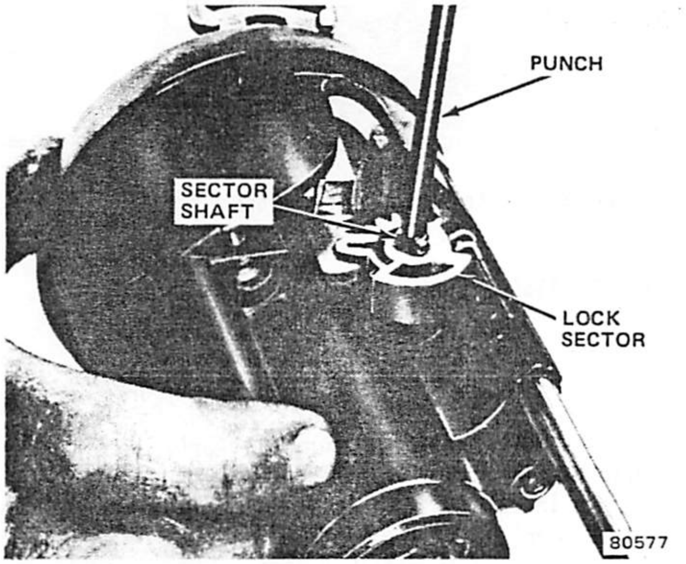

Fig. 2J-56 Lock Sector and Sector Shaft Removal

(36) Remove lock shoe pin from housing using tool J-22635 or pin punch (fig. 2J-38) and remove lock shoes, springs, and wedge.

(37) Remove housing upper and lower bearings and races only if damaged or worn. If bearings and races must be replaced, remove bearings and races using hammer and punch.

NOTE: *Discard the housing bearings and races if removed. They are not reusable.*

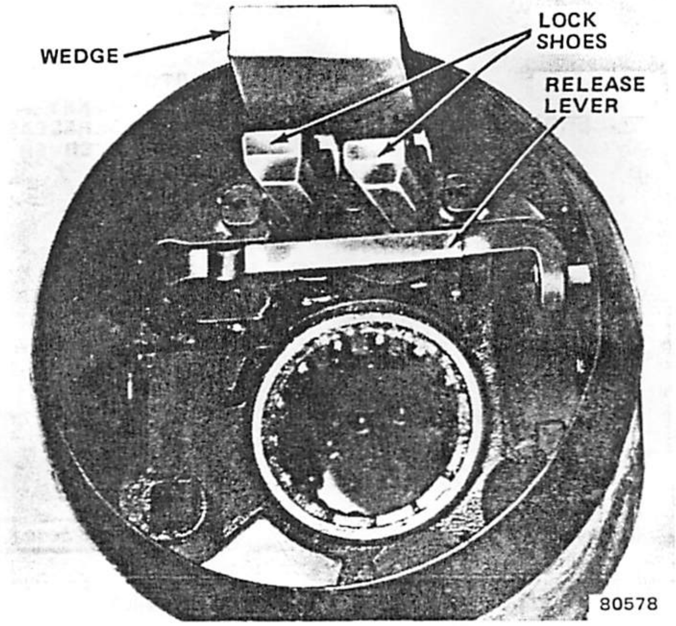

Fig. 2J-57 Relieving Lock Shoe Spring Tension

(38) Disconnect steering shaft at intermediate shaft coupling.

(39) Remove steering shaft through upper end of column (fig. 2J-58).

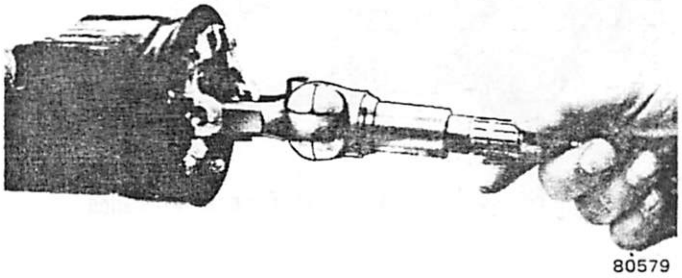

Fig. 2J-58 Steering Shaft Removal/Installation

(40) Remove support attaching bolts and remove support (fig 2J-59). Use 1/4-inch, 12-point deep socket to remove bolts.

(41) Remove retainer plate (fig. 2J-60). Tip upper end of plate rearward and turn plate counterclockwise to remove.

(42) Remove shroud using twisting-pulling motion (fig. 2J-61).

(43) Remove key-release lever and lever spring from shroud (fig. 2J-62). Tip lever forward and lift upward to remove.

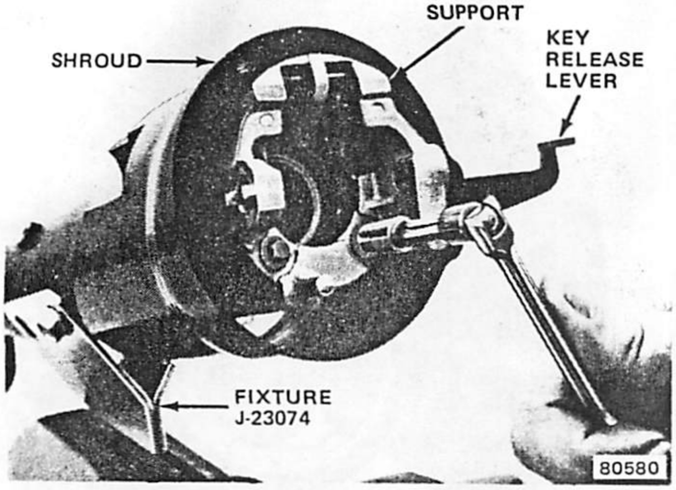

Fig. 2J-59 Support Removal/Installation

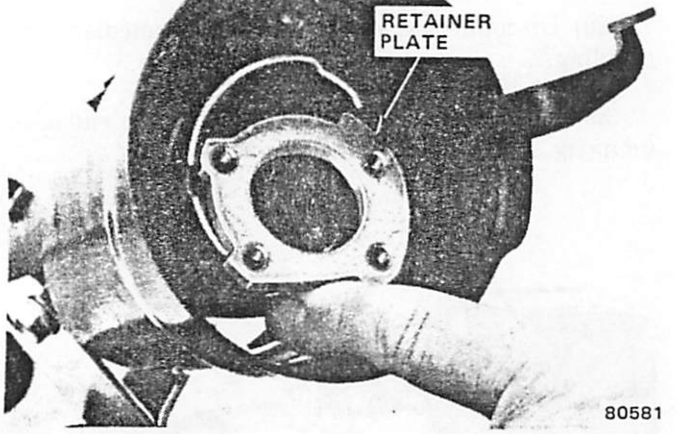

Fig. 2J-60 Retainer Plate Removal/Installation

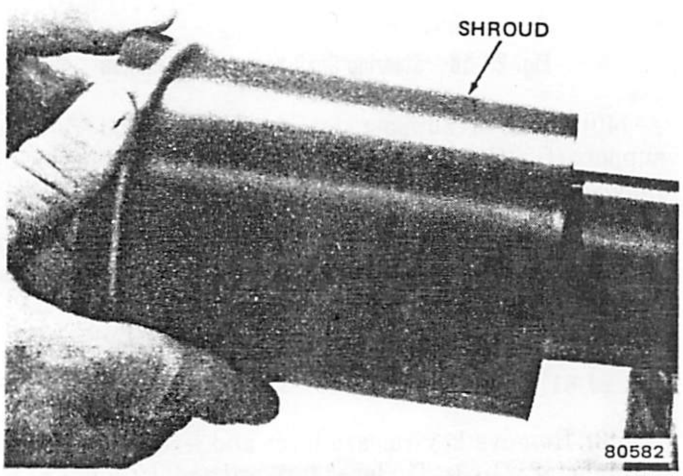

Fig. 2J-61 Shroud Removal/Installation

(44) Disconnect ignition switch wire harness connector and remove switch from column.

(45) Remove snap ring, retainer, and bearing assembly from lower end of column.

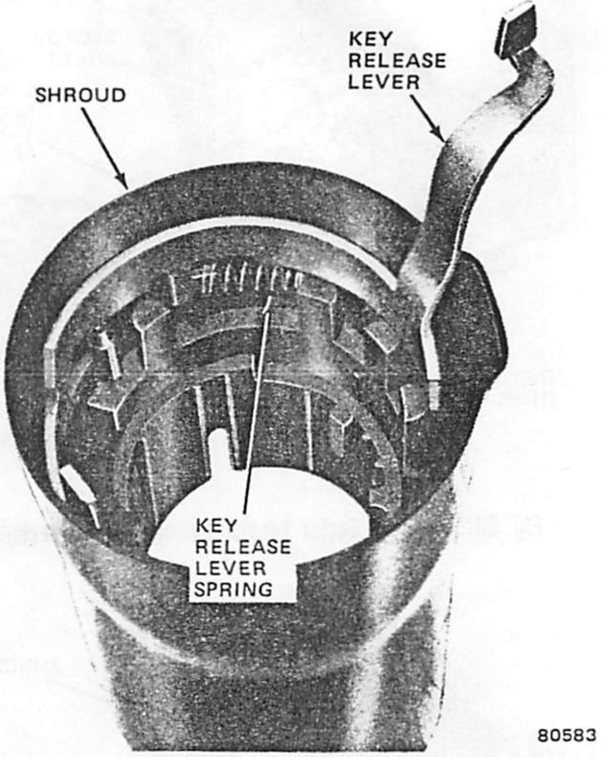

Fig. 2J-62 Key-Release Lever and Spring Removal/Installation

Column Assembly

(1) Lubricate all bearing, friction, and thrust surfaces with chassis grease.

(2) Install bearing assembly, bearing retainer, and snap ring in lower end of column (fig. 2J-47).

(3) Install key-release lever spring on lever and install assembled lever and spring in shroud (fig. 2J-62).

(4) Align and install shroud on column jacket (fig. 2J-61).

(5) Install retainer plate (fig. 2J-60). Tip plate toward 12 o'clock position, slide it under jacket opening, and seat it in column jacket notches.

(6) Align column jacket "V" notch with corresponding "V" on support and install support in column (fig. 2J-63). Press key-release lever downward while pressing support into place to seat support fully.

(7) Install all support attaching screws finger-tight. Then tighten screws alternately and evenly to 60 inch-pounds (81 N•m) torque (fig. 2J-59).

(8) Install remote rod in support. Guide rod through upper end of shroud and insert it into rod slot in support.

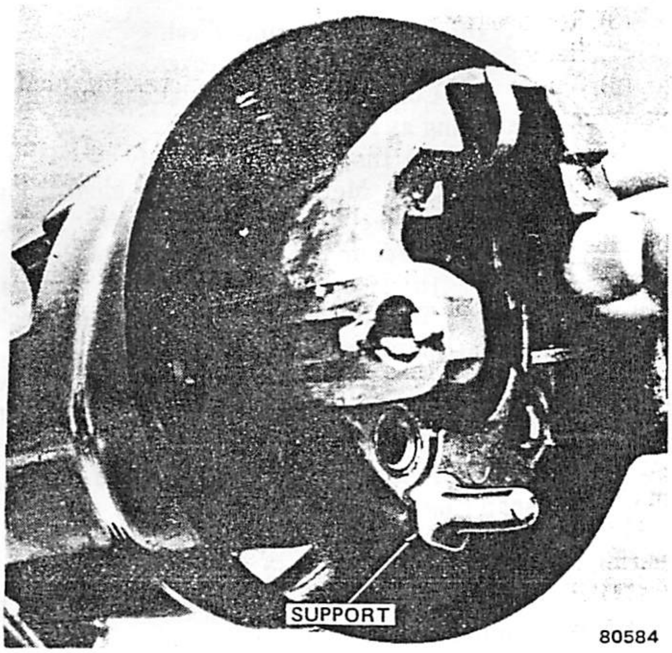

Fig. 2J-63 Support Installation

(9) Install steering shaft in column (fig. 2J-58).

(10) Install replacement bearings in housing, if removed. Be sure to lubricate bearings with chassis grease before installation.

(11) Install lock shoes, lock shoe springs, and lock shoe pin in housing. Use 0.180-inch (4.5 mm) diameter rod to align lock shoes and pin during installation.

(12) Install release lever, lever spring, and lever pin in housing. Insert wedges between housing and lever to relieve spring tension and ease pin installation (fig. 2J-57).

(13) Install sector shaft in housing. Lightly tap shaft into housing using punch.

(14) Install lock sector on shaft. Lightly tap sector onto shaft until shaft snap ring groove is exposed and install sector retaining snap ring.

(15) Install lock bolt in housing and engage bolt in lock sector cam surface (fig. 2L-56).

(16) Install lock rack, rack preload spring, and replacement shim (if used) in housing. Square block tooth of rack must engage square block tooth of sector (fig. 2J-56).

(17) Install lock spring and spring retaining screw (fig. 2J-55). Tighten screw to 35-inch pounds (4 N•m) torque.

(18) Align and install assembled housing on support (fig. 2J-53). Hold lock shoes in disengaged position to ease housing installation.

(19) Align pivot pin holes in housing and support and install pivot pins. Press housing downward when first installing pins to prevent damaging pin holes in support. When pins are started in both housing and support, seat pins fully using hammer and punch.

(20) Insert tilt lever in housing and place housing full upward tilt position.

(21) Lubricate tilt guide and spring liberally w chassis grease and install tilt spring on guide.

(22) Insert assembled tilt spring and guide in hc ing and install guide retainer on spring (fig. 2J-52). gage retainer lock tabs with housing lugs by press retainer downward and turning clockwise us screwdriver.

(23) Install tilt lever shield in housing.

(24) Remove tilt lever.

(25) Install cover on housing. Align and install cc attaching screws. Tighten screws to 60 inch-pound N•m) torque.

(26) Install turn signal switch. Guide switch harr and connector through column and position switch housing. Do not install switch screws at this time.

(27) Insert hazard warning knob in signal swi press knob inward, and align and install signal swi attaching screws. Tighten screws to 35 inch-pound N•m) torque. Be sure signal switch is properly sea before tightening screws.

(28) Thread hazard warning knob into signal sw and pull knob outward.

(29) Install upper bearing race and seat in hous (fig. 2J-51).

(30) Install upper bearing preload spring, cance cam, and lock plate (fig. 2J-47).

(31) Install replacement steering shaft snap ring sleeve of Compressor Tool J-23653 and install tool steering shaft (fig. 2J-25).

CAUTION: *Identify the steering shaft nut thread t before installing the compressor tool. If the shaft American threads, use the compressor tool as is. H ever, if the shaft has metric threads (fig. 2J-2), repl the compressor tool standard forcing screw with Me Forcing Screw J-23653-4 before installing the tool.*

(32) Compress lock plate and seat snap ring in ste ing shaft groove (fig. 2J-25).

(33) Remove compressor tool. Be sure snap ring completely seated before removing tool.

(34) Install tilt and turn signal levers. Tighten t signal lever attaching screw to 15 inch-pounds (2 N• torque.

(35) Install shift lever and lever retaining pin. equipped.

(36) Install ignition lock cylinder. Hold cylin sleeve, turn knob clockwise against stop, align cylin tab with housing keyway and insert cylinder in housi Turn cylinder knob counterclockwise until cylin mates with lock sector and push cylinder inward ur retainer snaps into place.

(37) Insert key in lock cylinder and turn cylinder Off-Unlock position.

(38) Install ignition switch as follows:

(a) Move switch slider to Accessory position then back two clicks to Off-Unlock position. Remote rod hole in slider should be almost at center (fig. 2J-64).

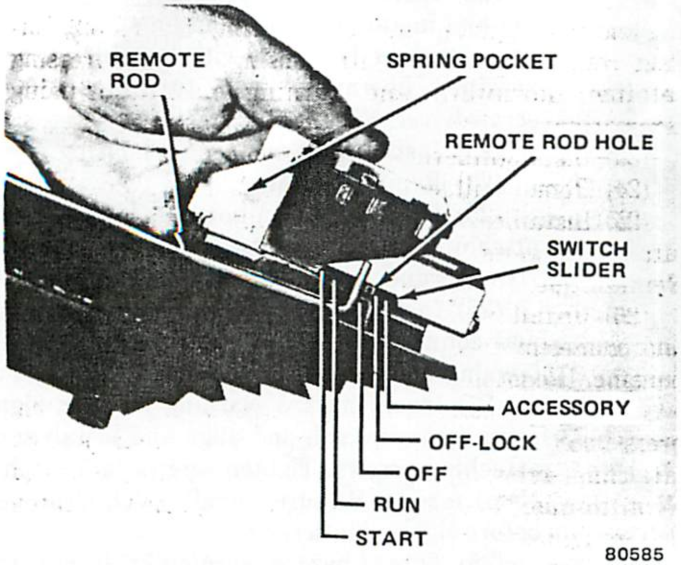

Fig. 2J-64 Ignition Switch Installation

(b) Insert remote rod into slider hole and install switch on column jacket.

(c) Move switch downward to eliminate switch-to-remote rod lash and tighten switch attaching screws to 35 inch-pounds (4 N•m) torque.

(39) Position switch harness protectors, if equipped, over harness and snap protectors into place on column.

(40) Install lock plate cover.

(41) Install steering wheel. Tighten steering wheel nut to 30 foot-pounds (41 N•m) torque.

CAUTION: *Some steering shafts have metric size steering wheel nut threads. Identify the shaft nut thread type before installing a replacement nut. Metric shafts have an identifying groove in the steering wheel locating splines (fig. 2J-2). American thread shafts do not have this groove.*

(42) Remove column support fixture and install column mounting bracket. Tighten bracket attaching bolts to 20 foot-pounds (27 N•m) torque.

(43) Install column, if removed. Refer to Steering Column Installation.

Removal

(1) Disconnect battery negative cable.

(2) Cover painted areas of column.

(3) Remove column-to-instrument panel bezel.

(4) Loosen toeplate screws.

(5) On vehicles with tilt column, place column in neutral (nontilt) position.

(6) Remove steering wheel.

(7) Remove lock plate cover.

(8) Compress lock plate and unseat steering shaft snap ring as follows:

(a) Inspect and identify steering shaft nut thread type. Metric shafts have identifying groove in steering wheel locating splines (fig. 2J-2). American thread shafts do not have this groove.

(b) If shaft has American threads, use Compressor Tool J-23653 as is to compress lock plate and unseat snap ring.

(c) If shaft has metric threads, replace compressor tool standard forcing screw with Metric Forcing Screw J-23653-4 before installing tool on shaft.

(9) Remove compressor tool and snap ring. Discard snap ring.

(10) Remove lock plate, canceling cam, and upper bearing preload spring.

(11) Place turn signal lever in right turn position and remove lever.

(12) Remove hazard warning knob. Press knob inward and turn counterclockwise to remove.

(13) Remove column wiring harness protectors, if equipped.

(14) Disconnect column wiring harness connectors at base of column.

(15) If Cruise Command switch is to be serviced, remove switch and harness by removing turn signal lever attaching screw and removing lever, switch, and switch harness as assembly.

(16) If turn signal switch is to be serviced, remove hazard warning knob and turn signal lever. Remove switch attaching screws and remove switch from column.

Installation

(1) If turn signal switch was serviced, install switch in housing and install attaching screws. Tighten screws to 35 inch-pounds (4 N•m) torque. Install hazard warning knob and install turn signal lever. Tighten lever attaching screw to 15 inch-pounds (2 N•m) torque.

(2) If Cruise Command switch was serviced, install signal lever and switch assembly and install attaching screws. Tighten screws to 35 inch-pounds (4 N•m) torque.

(3) Install upper bearing preload spring, canceling cam, and lock plate on steering shaft.

(4) Install replacement steering shaft snap ring on sleeve of Compressor Tool J-23653 and install tool on steering shaft.

CAUTION: *Identify the steering shaft nut thread type before installing the compressor tool. If shaft has American threads, use tool J-23653 as is. However, if the shaft has metric threads (fig. 2J-2), replace the compressor tool standard forcing screw with Metric Forcing Screw J-23653-4 before using the tool.*

(5) Compress lock plate and seat steering shaft snap ring in shaft groove. Remove compressor tool after snap ring installation.

(6) Install lock plate cover.

(7) Install steering wheel and install replacement steering wheel nut. Tighten nut to 30 foot-pounds (41 N•m) torque.

CAUTION: *Some steering shafts have metric size steering wheel nut threads. Be sure to install the proper thread-type nut. Metric shafts have an identifying groove in the steering wheel locating splines (fig. 2J-2).*

(8) Connect signal switch or Cruise Command switch harness connectors at base of column and install harness protector.

(9) Install and tighten column-to-mounting bracket bolts to 20 foot-pounds (27 N•m) torque.

(10) Install and tighten column mounting bracket-to-instrument panel bolts to 20 foot-pounds (27 N•m) torque.

(11) Install column bezel.

(12) Tighten toeplate bolts to 10 foot-pounds (14 N•m) torque.

(13) Remove protective covering from painted areas of column.

(14) Connect battery negative cable.

IGNITION SWITCH

Removal

(1) Insert key in lock cylinder and turn cylinder to Off-Unlock position.

(2) Disconnect battery negative cable.

(3) Disconnect harness connectors at switch.

(4) Remove switch attaching screws.

(5) Disengage remote rod from switch slider and remove switch from column.

Installation

(1) Move switch slider to Accessory position (fig. 2J-64).

(2) Move switch slider back two clicks to Off-Unlock position (fig. 2J-64).

(3) Engage remote rod in switch slider and position switch on column. Do not move slider when positioning switch on column jacket.

(4) Install and tighten switch attaching screws to 35 inch-pounds (4 N•m) torque.

(5) Connect harness connectors to switch.

(6) Connect battery negative cable.

IGNITION LOCK CYLINDER

The key-operated lock cylinder is located at the upper end of the steering column and is mounted in the column housing or cover. The lock cylinder is a two-piece assembly and can be removed, disassembled, and repaired or recoded if necessary.

Conditions Requiring Service

Key Lost—Key Code Number Known

The key code may be converted to a five-digit number that determines key bitting. This number may be obtained from the catalogues furnished by manufacturers of key cutting machines or by calling the Jeep zone office.

Defective Ignition Lock—Ignition Key Available—No Key Code Number

New lock cylinders are available from service parts warehouses only as uncoded cylinders without tumblers. Tumblers are ordered under five different part numbers, one for each depth of cut available. Refer to Key Coding.

Key Lost—Key Code Lost Or Not Known

Contact the servicing dealer and provide the dealer with the vehicle identification number. The dealer may have a record of the key codes involved. If not, the key code numbers assigned to the vehicle may be obtained from the Jeep zone office.

Lock Cylinder Removal

(1) Disconnect battery negative cable.

(2) Apply protective material to painted areas of column.

(3) Remove steering wheel.

(4) Remove lock plate cover. Use two screwdrivers to pry cover out of column.

(5) Compress lock plate and unseat steering shaft snap ring as follows:

(a) Inspect and identify steering shaft nut thread type. Metric shafts have identifying groove in steering wheel locating splines (fig. 2J-2). American thread shafts do not have this groove.

(b) If shaft has American threads, use Compressor Tool J-23653, as is, to compress lock plate and unseat snap ring (fig. 2J-6).

(c) If shaft has metric threads, replace compressor tool standard forcing screw with Metric Forcing Screw J-23653-4 before installing tool on steering shaft.

WARNING: *The lock plate is under strong spring pressure. Do not attempt to remove the steering shaft snap ring without using the compressor tool.*

(6) Remove compressor tool and snap ring. Discard snap ring.

(7) Remove lock plate, canceling cam, and upper bearing preload spring.

(8) Remove turn signal lever attaching screw and remove lever.

(9) Press hazard warning knob inward and turn knob counterclockwise to remove it.

(10) Disconnect turn signal and Cruise Command wire harness connectors at base of column.

(11) Remove turn signal switch attaching screws and move switch aside to provide working clearance. It is not necessary to remove switch and harness completely.

(12) Insert key in lock cylinder. On manual transmission columns, place cylinder in On position. On automatic transmission columns, place cylinder in Off-Lock position.

(13) Compress lock cylinder retaining tab using thin blade screwdriver and remove lock cylinder from column.

NOTE: *The lock cylinder retaining tab is accessible through the slot adjacent to the turn signal switch mounting boss (fig. 2J-9). If the tab is not visible through the slot, scrape or knock any casting flash out of the slot to provide access.*

Lock Cylinder Installation

(1) Install lock cylinder as follows:

(a) Insert key in lock cylinder.

(b) Hold cylinder sleeve and turn key clockwise until key stops.

(c) Align lock cylinder retaining tab with keyway in housing and insert cylinder into column.

(d) Push cylinder inward until it contacts lock sector. Rotate cylinder to engage it with lock sector, and push cylinder inward until cylinder retaining tab engages in housing groove.

(2) Align and install turn signal switch in column.

(3) Install and tighten switch attaching screws to 35 inch-pounds (4 N•m) torque.

(4) Install hazard warning knob. Tighten knob to 5 inch-pounds (0.56 N•m) torque.

(5) Install turn signal lever. Tighten lever attaching screw to 15 inch-pounds (2 N•m) torque.

(6) Install upper bearing preload spring, canceling cam, and lock plate on steering shaft.

(7) Install replacement steering shaft snap ring on sleeve of Compressor Tool J-23653 and install tool on steering shaft (fig. 2J-6).

CAUTION: *Identify the steering shaft nut thread type before installing the compressor tool. If the shaft has American threads, use the tool as is. However, if the shaft has metric threads (fig. 2J-2), replace the compressor tool standard forcing screw with Metric Forcing Screw J-23653-4 before installing the tool on the shaft.*

(8) Compress lock plate with compressor tool and seat snap ring in steering shaft groove (fig. 2J-6).

(9) Remove compressor tool.

(10) Install lock plate cover.

(11) Install steering wheel and tighten steering wheel nut to 30 foot-pounds (41 N•m) torque.

CAUTION: *Some steering shafts have metric steering wheel nut threads. Identify the shaft nut thread type before installing a replacement nut. Metric shafts have an identifying groove in the steering wheel locating splines (fig. 2J-2).*

(12) Connect column wiring harness connectors at base of column.

(13) Remove protective covering from column painted areas.

(14) Connect battery negative cable.

(15) Reset clock, if equipped.

Lock Cylinder Disassembly

In the following procedures, all references to turning the key clockwise or counterclockwise are made as if the cylinder is being viewed from the key-end.

(1) Insert key in lock cylinder.

(2) Hold lock sleeve and turn cylinder to Lock position.

(3) Fabricate plunger pin compressor tool from paper clip. Make 90° bend in one end of clip about 1/4 inch (6.35 mm) from end (fig. 2J-65).

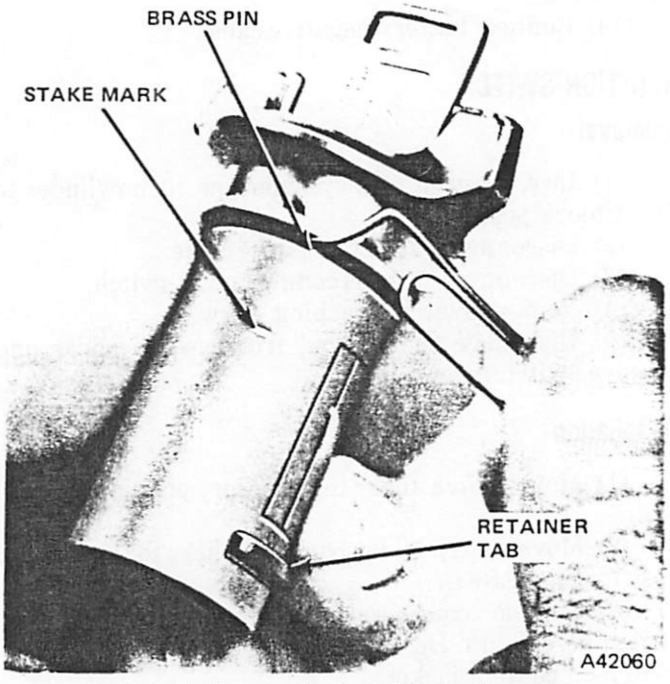

Fig. 2J-65 Compressing Lock Cylinder Plunger Pin

(4) Turn lock cylinder to Accessory position. Brass plunger pins in lock sleeve should now bear against lock cylinder stop lug (fig. 2J-66).

(5) Compress plunger pin using paper clip compressor tool (fig. 2J-65).

NOTE: *There are two brass pins and two staking marks on the lock sleeve. The brass pin that must be compressed in order to separate the cylinder and sleeve is located just above the stake mark that is positioned above and to the left of the retaining tab (fig. 2J-65).*

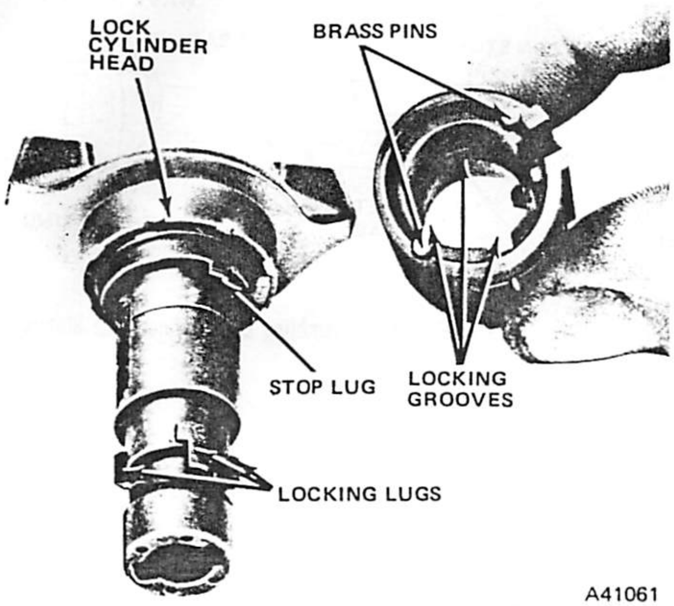

Fig. 2J-66 Lock Cylinder and Sleeve Disassembled

(6) Hold brass plunger pin in compressed position and turn lock cylinder clockwise using paper clip.

(7) Stop turning cylinder when it springs upward slightly. Cylinder locking lugs are now aligned with sleeve locking grooves.

(8) Remove ignition key.

(9) Turn sleeve and cylinder upside down.

(10) Fabricate wire hook from additional paper clip.

(11) Lift nylon stop on lock sleeve using wire hook and separate cylinder from sleeve (fig. 2J-67).

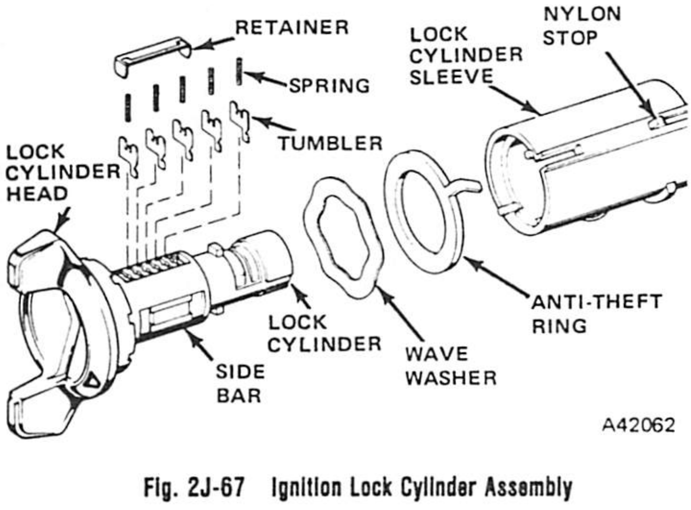

Fig. 2J-67 Ignition Lock Cylinder Assembly

NOTE: *If the cylinder does not separate from the sleeve easily, tap the assembly lightly on the workbench to free the sleeve from the cylinder.*

(12) Pry tumbler retainer from cylinder and remove tumbler springs (fig. 2J-67).

(13) Pull side bar outward slightly and remove tumblers from cylinder (fig. 2J-67).

Key Coding

To determine the tumblers needed when the key code is not available, use the code diagram as follows (fig. 2J-68):

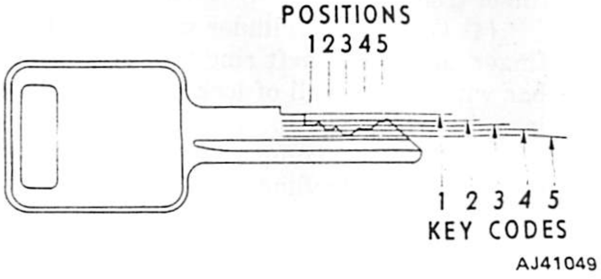

Fig. 2J-68 Key Coding Diagram

(1) Place key over coding diagram with uncut side of key aligned exactly with diagram. Each of five positions will align with key notches.

(2) Starting at head of key blade, determine and record lowest level tumbler number that is visible in each position (1 through 5).

(3) After tumbler number sequence is determined, lock cylinder is ready for assembly.

(4) Starting at key end of lock cylinder, insert tumblers in proper slots and in order required by key code. Pull side bar outward slightly to allow tumblers to drop completely into place.

(5) Install a spring on each tumbler.

(6) Insert tumbler retainer so two end prongs slid into slots in cylinder.

(7) Press retainer downward until it is seated.

(8) Insert key in lock cylinder and check tumble operation. If tumblers are properly installed, side ba will drop downward when key is inserted. If side ba does not move, disassemble cylinder and check for in correct assembly or coding of key and tumblers.

(9) If cylinder is correctly assembled and operat properly, stake each end of spring retainer in place usin punch (fig. 2J-69).

Assembly

(1) Insert key completely into lock cylinder, the pull key out two notches.

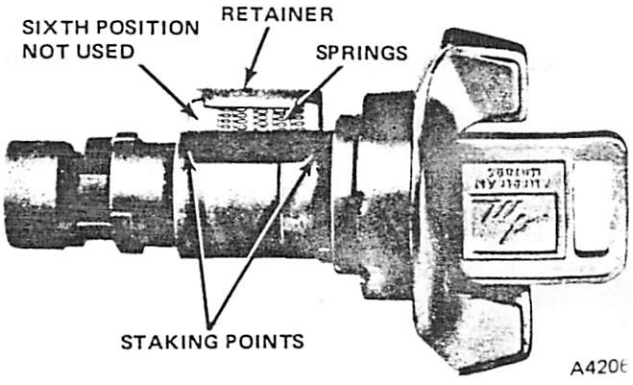

Fig. 2J-69 Tumbler and Spring Installation

(2) Install wave washer and anti-theft ring on lock cylinder (fig. 2J-70).

(3) Grasp lock sleeve with left thumb and forefinger and hold nylon stop in lock sleeve upward with forefinger (fig. 2J-70).

(4) Grasp lock cylinder with right thumb and forefinger, align anti-theft ring tang and lock cylinder side bar with slot in wall of lock sleeve, and insert cylinder into sleeve (fig. 2J-70).

(5) Push key completely into cylinder and turn key clockwise to lock cylinder in sleeve.

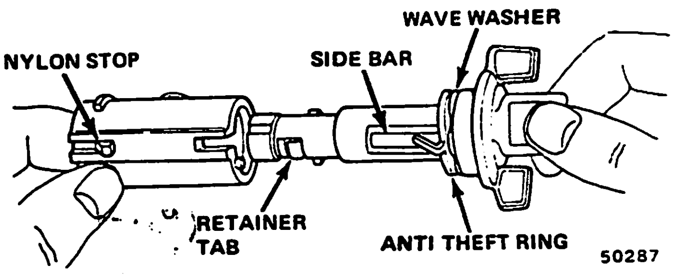

Fig. 2J-70 Assembling Lock Cylinder and Sleeve

SPECIFICATIONS

Torque Specifications

Service Set-To Torques should be used when assembling components. Service In-Use Recheck Torques should be used for checking a pre-tightened item.

	USA (ft-lbs)		Metric (N•m)	
	Service Set-To Torque	Service In-Use Recheck Torque	Service Set-To Torque	Service In-Use Recheck Torque
Clamp Bolt, Flexible Coupling	30	25-35	41	34-47
Clamp Bolt, Intermediate Shaft	45	40-55	61	54-75
Clamp Bolt, Steering Shaft U-Joint	45	40-55	61	54-75
Column Mounting Bracket Bolt	20	15-25	27	20-34
Column Mounting Bracket-to-Instrument Panel Bolts	20	15-25	27	20-34
Cover Screws (Auto. Col.)	60 in-lbs.	50-65 in-lbs.	7	5-7
Cover Screws (Tilt Col.)	100 in-lbs.	95-105 in-lbs.	11	10-12
Hazard Warning Knob	5 in-lbs.	3-7 in-lbs.	0.56	0.34-0.79
Housing Screws (Std. Col.)	60 in-lbs.	55-65 in-lbs.	7	5-7
Housing Screws (Tilt Col.)	100 in-lbs.	95-105 in-lbs.	11	10-12
Ignition Switch Mounting Screws	35 in-lbs.	30-40 in-lbs.	4	3-5
Lock Sector Tension Spring Screw	35 in-lbs.	30-40 in-lbs.	4	3-5
Shroud Screws (Man. Trans. Col.)	18 in-lbs.	14-22 in-lbs.	2	2-3
Steering Wheel Nut	30	25-35	41	34-47
Support Screws (Tilt Col.)	60 in-lbs.	50-65 in-lbs.	7	5-7
Tilt Lever Screw	35 in-lbs.	30-40 in-lbs.	4	3-5
Toe Plate Screws	10	10-18	14	14-24
Turn Signal Lever Screw	15 in-lbs.	12-20 in-lbs.	2	1-3
Turn Signal Switch Screws	35 in-lbs.	28-40 in-lbs.	4	3-5

All Torque values given in foot-pounds and newton-meters with dry fits unless otherwise specified.

80629

Tools

J-23072
SHIFT TUBE REMOVER

J-22635
PIN REMOVER AND
INSTALLER

J-23653
LOCK PLATE
COMPRESSOR

J-23073
SHIFT TUBE
INSTALLER

J-22569
STEERING SHAFT SNAP RING
REMOVER AND INSTALLER

J-21232
STEERING WHEEL
PULLER

J-23074
STEERING COLUMN
HOLDING FIXTURE

J-21854-1 PIVOT
PIN PULLER

50408A

NOTES

MANUAL STEERING GEAR 2K

INDEX

GENERAL

The manual steering gear used on Jeep vehicles is a recirculating ball design (fig. 2K-1). The steering gear wormshaft and ball nut are in line with the steering shaft in the column. Steering ratio of this unit is 24:1.

The steering gear wormshaft and column steering shaft are connected by a removable flexible coupling. The coupling permits independent removal of the steering gear or column.

The steering gear ball nut is mounted on the wormshaft and is driven through steel ball bearings which circulate in the spiral grooves machined in the wormshaft and ball nut. The bearings act as a rolling thread between the wormshaft and ball nut. The ball nut is directly engaged by the pitman shaft sector teeth.

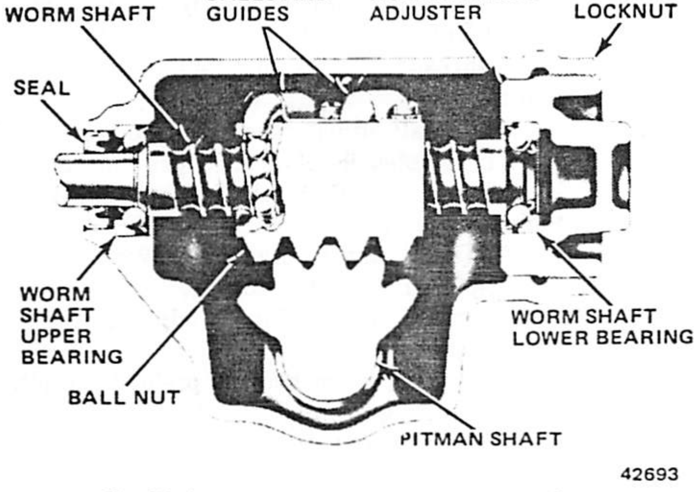

Fig. 2K-1 Recirculating Ball Manual Steering Gear

ON-VEHICLE SERVICE

Steering Gear Adjustment

Adjustments are generally made to compensate normal wear in the gear or to correct a handling prob caused by improper adjustment. Correct adjustmen sults in a definite drag or preload but does not ca excessive steering effort through any point of the tur

CAUTION: *Adjust the steering gear in the follo sequence only. Failure to do so could result in damag the gear or improper steering response. Always ad worm bearing preload first; then adjust pitman s overcenter drag torque last.*

Worm Bearing Preload and Pitman Shaft Overcenter Drag Torque

(1) Raise vehicle and remove crossmember cove equipped.

(2) Check and correct steering gear mounting torque, if necessary.

(3) Mark pitman arm and steering gear pit shaft for assembly reference.

(4) Remove pitman arm nut and remove pit arm using Puller J-6632 (fig. 2K-2).

(5) Loosen pitman adjusting screw locknut back off adjusting screw 2 or 3 turns.

(6) Remove horn button and cover.

(7) Slowly turn steering wheel in one direction stopped by gear; then turn wheel back 1/2 turn.

CAUTION: *Do not turn the steering wheel against the stop when the linkage is disconnected. could result in damage to the steering gear ball re guides.*

(8) Install socket and inch-pound torque wrench on steering wheel nut.

(9) Measure worm bearing preload by rotating steering wheel through 90° arc (1/4 turn). Preload should be 5 to 8 inch-pounds (0.6 to 1 N•m).

NOTE: *Steering column misalignment or damage will affect torque readings. If rotating torque is exceptionally high, check the column alignment. If alignment is correct, remove the gear, determine the problem area, and repair as necessary.*

(10) If preload adjustment is necessary, loosen worm bearing adjuster locknut and turn adjuster clockwise to increase preload or counterclockwise to decrease preload.

(11) When desired preload is obtained, tighten adjuster locknut to 90 foot-pounds (122 N•m) torque and check preload again. Correct preload as necessary.

(12) Adjust pitman shaft overcenter drag torque.

CAUTION: *Do not attempt to adjust pitman shaft overcenter drag torque until after worm bearing preload has been adjusted.*

(13) Rotate steering wheel slowly from stop-to-stop and count total number of steering wheel turns.

(14) Turn steering wheel back 1/2 total number of turns to place gear on center; then turn wheel 1/2 turn off center.

(15) Install socket and inch-pound torque wrench on steering wheel nut.

(16) Measure torque required to turn gear through center of travel (this is overcenter drag torque). Drag torque should equal worm bearing preload torque plus 4 to 10 inch-pounds (.5 to 1 N•m) but must not exceed total of 18 inch-pounds (2 N•m).

Example:

Worm bearing preload is adjusted to 6 inch-pounds (0.7 N•m) torque. Over center drag torque is adjusted to 7 inch-pounds (0.8 N•m) in addition to worm bearing preload. This makes a total of 13 inch-pounds (1 N•m) which is acceptable.

(17) If adjustment is required, loosen pitman shaft adjusting screw locknut and loosen or tighten adjusting screw to obtain desired drag torque.

(18) Tighten pitman shaft adjusting screw locknut to 25 foot-pounds (34 N•m) after adjusting drag torque and recheck drag torque again. Correct adjustment if necessary.

(19) Install pitman arm. Index arm to shaft using alignment marks made at disassembly.

(20) Tighten pitman arm nut to 185 foot-pounds (251 N•m) torque and stake nut to shaft threads in one place.

(21) Lower vehicle.

(22) Correct steering wheel-to-steering shaft alignment if necessary and install horn button cover.

Pitman Shaft Seal Replacement

(1) Raise vehicle.

(2) Place front wheels in straight-ahead position.

(3) Mark pitman arm and shaft for assembly reference.

(4) Remove pitman arm using Puller J-6632 (fig. 2K-2).

(5) Remove seal using pointed tool or screwdriver with small blade.

(6) Inspect condition of gear lubricant. If contaminated and full of metal particles, remove and overhaul gear.

(7) Wrap pitman shaft splines with shimstock to protect replacement seal during installation.

(8) Lubricate lip of replacement seal with chassis lubricant, slide seal over shimstock and into seal seat in gear housing. Complete seal installation by tapping seal into place using small plastic mallet.

(9) Install pitman arm on shaft. Align arm and shaft using reference marks made at disassembly.

(10) Tighten pitman arm nut to 185 foot-pounds (251 N•m) torque and stake nut to shaft threads in one place.

(11) Lower vehicle.

Side Cover and Gasket Replacement

(1) Raise vehicle.

(2) Remove pitman shaft adjusting screw locknut.

(3) Remove side cover attaching bolts.

(4) Turn pitman shaft adjusting screw clockwise to remove cover from screw.

(5) Inspect condition of gear lubricant. If contaminated and full of metal particles, remove and overhaul gear.

(6) Coat replacement side cover gasket with chassis lubricant and position gasket on replacement side cover.

(7) Slide pitman shaft adjusting screw out of T-slot in pitman shaft. Do not lose adjusting screw shim.

(8) Thread adjusting screw into side cover to depth of 2-3 threads. Turn screw counterclockwise to start it into cover.

(9) Install adjusting screw in pitman shaft T-slot, align bolt holes in cover and gear housing, and turn adjusting screw counterclockwise until side cover seats against housing.

(10) Install and tighten side cover attaching bolts to 30 foot-pounds (41 N•m) torque.

(11) Install pitman shaft adjusting screw locknut finger-tight only.

(12) Adjust worm bearing preload and pitman shaft overcenter drag torque.

(13) Check and correct gear lubricant level as necessary.

(14) Lower vehicle.

Service Diagnosis

Condition	Possible Cause	Correction
HARD STEERING	(1) Incorrect tire pressure.	(1) Adjust.
	(2) Lack of lubrication.	(2) Lubricate steering linkage.
	(3) Tie rod ends worn.	(3) Replace rod ends.
	(4) Steering knuckle ball studs tight.	(4) Adjust or replace.
	(5) Steering gear parts worn.	(5) Overhaul hear.
	(6) Frozen steering column bearings.	(6) Replace bearings.
	(7) Lower coupling flange rubbing against steering shaft.	(7) Loosen bolt and assemble properly.
	(8) Steering gear adjusted incorrectly.	(8) Check adjustment. Disconnect pitman arm from gear or disconnect linkage from pitman arm and adjust gear if necessary.
	(9) Front spring sag.	(9) Check front end jounce height. It should be approximately the same at both wheels. Replace front springs if sagged.
	(10) Frame bent or broken.	(10) Repair frame as necessary.
	(11) Steering knuckle bent.	(11) Replace knuckle.
	(12) Ball stud galled or too tight.	(12) Replace ball stud.
	(13) Steering knuckle ball studs binding.	(13) Reseat or replace studs.
	(14) Steering gear or connections binding.	(14) Test steering system with wheels off floor. Adjust and lubricate.
LOOSE STEERING	(1) Tie rod ends worn.	(1) Replace rod ends.
	(2) Steering knuckle ball studs worn.	(2) Replace studs.
	(3) Steering gear parts worn.	(3) Overhaul gear.
	(4) Steering gear improperly adjusted.	(4) Adjust gear.
EXCESSIVE ROAD SHOCK	(1) U-bolts loose.	(1) Repair as necessary.
	(2) Wheel bearings loose.	(2) Adjust bearings.
	(3) Shock absorbers worn.	(3) Replace.
TURNING RADIUS SHORT ONE SIDE	(1) Center bolt in spring sheared off.	(1) Repair as necessary.
	(2) Axle shifted.	(2) Repair as necessary.
	(3) Steering arm bent.	(3) Replace.

60701

REMOVAL

(1) Remove intermediate shaft-to-wormshaft coupling clamp bolt and disconnect intermediate shaft.

(2) Remove pitman arm nut and lockwasher.

(3) Remove pitman arm from steering gear pitman shaft using Tool J-6632 (fig. 2K-2).

(4) On Cherokee, Wagoneer and Truck models, remove bolts attaching steering gear to frame and remove gear.

(5) On CJ and Scrambler models:

(a) Raise *left side* of vehicle slightly to relieve tension on left front spring and place support stand under frame and remove crossmember cover, if equipped.

(b) Remove bolts attaching steering gear lower bracket to frame (fig. 2K-3).

(c) Remove bolts attaching steering gear upper bracket to frame rail and remove gear.

(d) Remove Torx Head upper bracket bolt using 9 inch (22.86 cm) extension and Torx Bit External Socket Tool J-25359-21 (fig. 2K-3).

(e) Remove remaining bolts attaching upper bracket to tie plate and lower bracket to steering gear and remove brackets from gear.

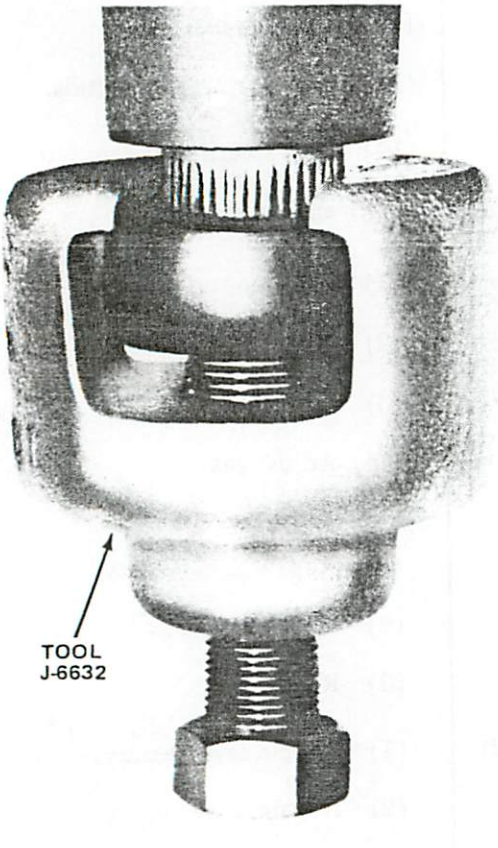

Fig. 2K-2 Pitman Arm Removal

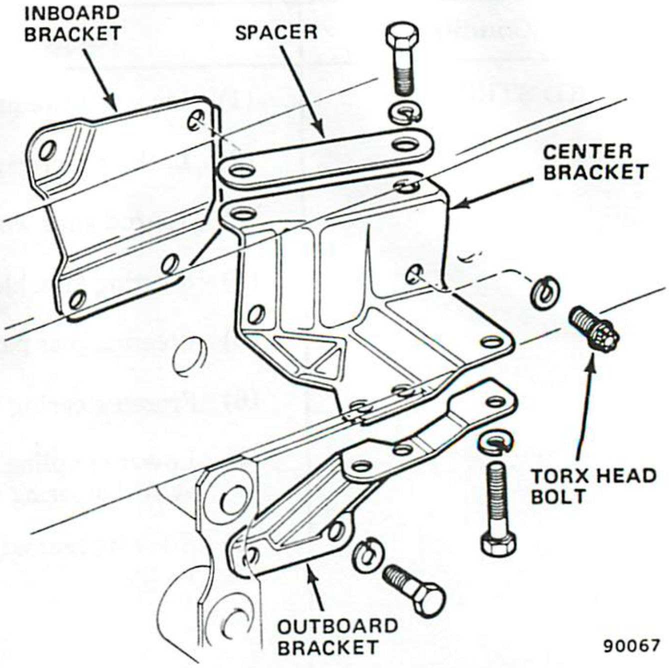

Fig. 2K-3 Steering Gear Mounting Brackets—CJ and Scrambler Models

INSTALLATION

NOTE: *Proper retention of the steering gear is important. Some of the following steps in gear installation require the application of Loctite 271 or similar material to attaching bolt threads. Wherever indicated, use Loctite 271 Adhesive/Sealant, or equivalent. Before applying this material, first clean all bolt threads thoroughly to remove dirt and grease and apply the material to the bolt threads no more than five minutes before installation.*

(1) On Cherokee, Wagoneer and Truck models:

(a) Apply Loctite 271, or equivalent, to steering gear-to-frame mounting bolts.

(b) Align and engage intermediate shaft coupling with splines on steering gear wormshaft.

(c) Position gear on frame and install gear attaching bolts. Tighten bolts to 70 foot-pounds (95 N•m) torque.

(d) Install intermediate shaft coupling pinch bolt and nut. Tighten nut to 45 foot-pounds (61 N•m) torque.

(2) On CJ and Scrambler models:

(a) Apply Loctite 271, or equivalent, to all steering gear mounting bracket attaching bolts.

(b) Position tie plate and upper and lower mounting brackets on steering gear and install mounting bracket-to-gear attaching bolts. Tighten hex-head bolts to 70 foot-pounds (95 N•m) torque. Tighten torx head bolt to 55 foot-pounds (75 N•m) torque using Torx Head External Socket Tool J-25359-21.

(c) Apply Loctite 271, or equivalent, to all steering gear-to-frame and crossmember mounting bolts.

(d) Align and engage intermediate shaft coupling with steering gear wormshaft splines.

(e) Position steering gear on frame and install remaining gear mounting bolts. Tighten bolts to 55 foot-pounds (75 N•m) torque and install crossmember cover, if equipped.

(3) Install intermediate shaft coupling clamp bolt and nut. Tighten nut to 45 foot-pounds (61 N•m) torque.

(4) Install pitman arm on pitman shaft and install lockwasher and pitman arm nut. Tighten nut to 185 foot-pounds (251 N•m) torque.

(5) On CJ and Scrambler models, remove support stand and hydraulic jack.

NOTE: *After the steering gear is installed, it may produce a slightly rough feel. To eliminate this roughness, turn the gear full left and right for 10 to 15 complete cycles.*

DISASSEMBLY

(1) Mount steering gear in vise. Clamp vise jaws on gear mounting bosses only.

(2) Place ball nut and pitman shaft in centered position. Rotate wormshaft stop-to-stop and count total number of turns. Turn wormshaft back 1/2 total number of turns to center shaft and nut.

(3) Remove pitman shaft adjuster screw locknut (fig. 2K-4).

(4) Remove side cover attaching bolts.

(5) Turn pitman shaft adjuster screw clockwise to unthread side cover from screw and remove side cover and gasket.

(6) Slide adjuster screw and shim out of T-slot in pitman shaft (fig. 2K-4). Retain shim and screw for end play measurement at assembly.

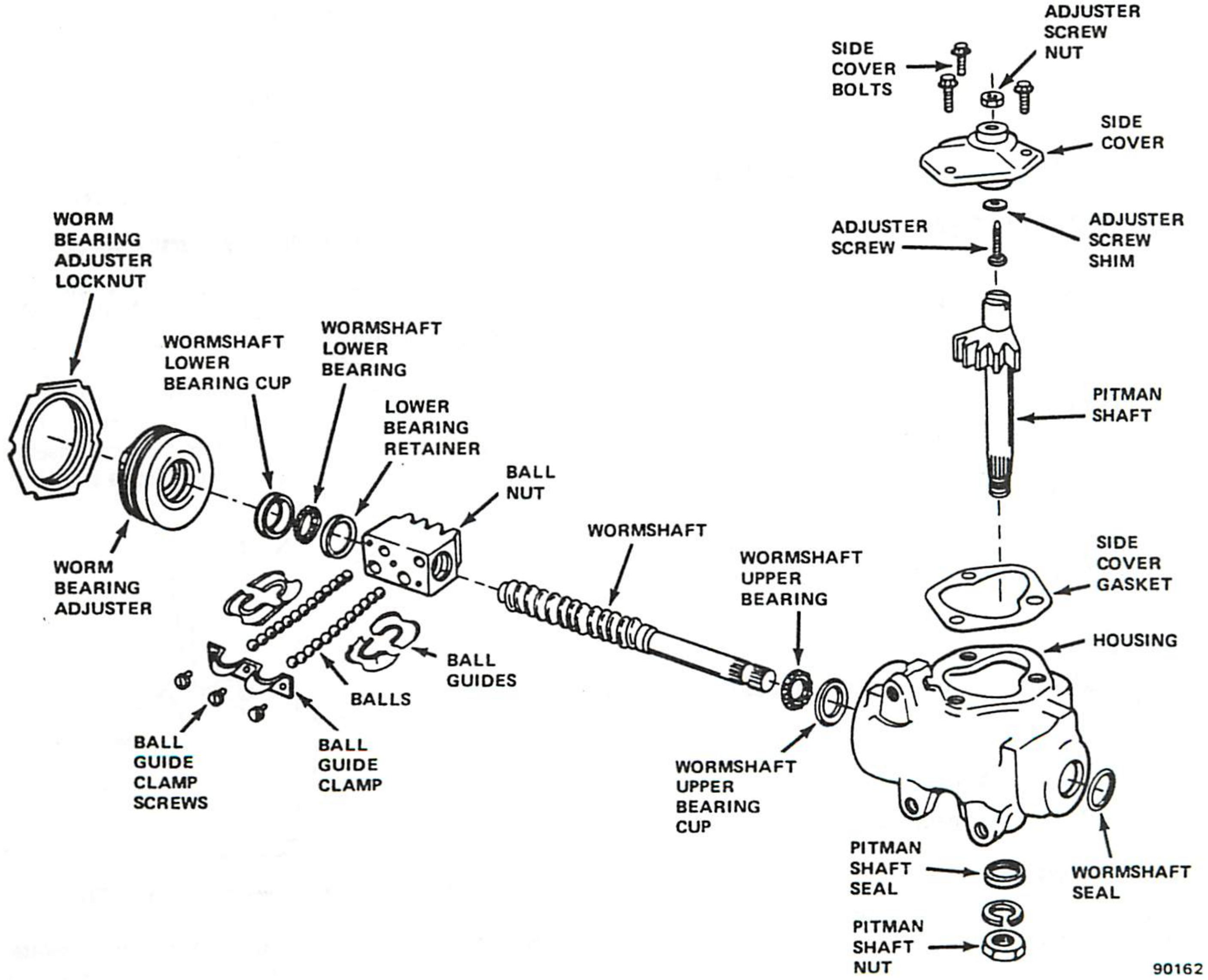

Fig. 2K-4 Manual Steering Gear

(7) Remove pitman shaft. If necessary, tap shaft lightly with plastic mallet to remove it.

(8) Remove worm bearing adjuster locknut.

(9) Remove worm bearing adjuster.

(10) Remove wormshaft and ball nut (fig. 2K-5).

CAUTION: *During service operations, do not allow the ball nut to rotate freely and bottom at either end of the wormshaft. This can damage the tangs at the ends of the ball guides.*

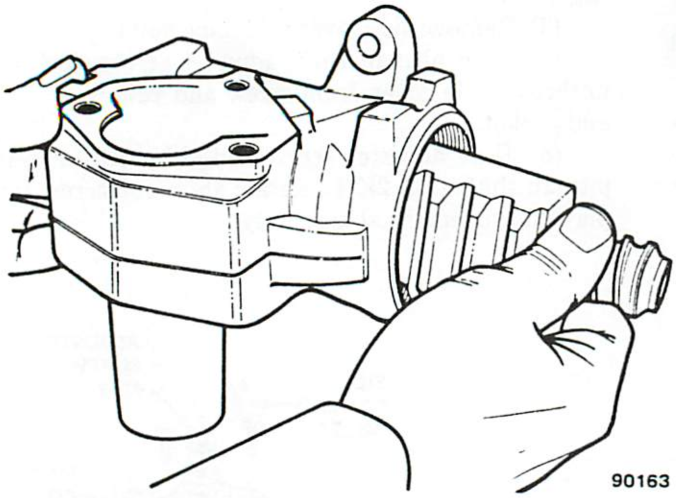

Fig. 2K-5 Wormshaft and Ball Nut Removal/Installation

SUBASSEMBLY OVERHAUL

Wormshaft and Ball Nut

Disassembly

(1) Place clean shop cloths on workbench and position wormshaft and ball nut on cloths.

(2) Remove upper bearing from wormshaft.

(3) Remove ball guide clamp attaching screws and remove clamp.

(4) Remove ball guides. Separate guide halves and retain ball bearings that stayed in guides during removal.

(5) Remove remaining ball bearings from ball nut circuits. Position ball nut over shop cloths and rotate wormshaft back and forth until bearings drop out onto cloth.

NOTE: *There are a total of 50 ball bearings in the ball nut with 25 in each circuit.*

(6) Remove wormshaft from ball nut.

Cleaning and Inspection

Wash all parts in solvent and dry using clean cloths or compressed air. Inspect all components for wear, scoring, cracks, nicks, or surface pitting and also check the upper bearing and ball bearings for flat spots. If the upper bearing is damaged, the upper bearing cup must also be replaced.

Assembly

(1) Position ball nut on workbench with ball guide holes facing upward and deep side of ball nut teeth facing edge of workbench (fig. 2K-6).

(2) Install wormshaft in ball nut from left side. Thread shaft into nut until equal number of shaft threads are visible at each end of nut (fig. 2K-6).

CAUTION: *The ball nut teeth are machined to a greater width and depth on one side. When assembling the wormshaft and ball nut, position the ball nut so the wider-deeper side of the teeth will face the housing side cover opening after installation (fig. 2K-6).*

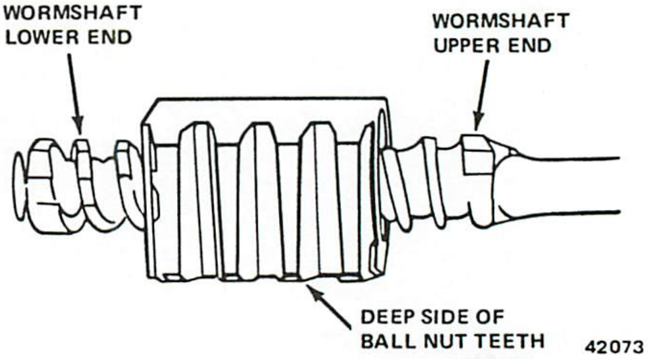

Fig. 2K-6 Positioning Wormshaft in Ball Nut

(3) Install one ball bearing in each ball guide hole.

(4) Move wormshaft up/down and side-to-side until bearings roll into ball nut threads under wormshaft and support wormshaft.

(5) Assemble and install ball guides in ball nut.

(6) Divide remaining 48 ball bearings in half and install 24 bearings in each ball nut circuit. Insert bearings into ball nut circuits through holes in ball guides (fig. 2K-7).

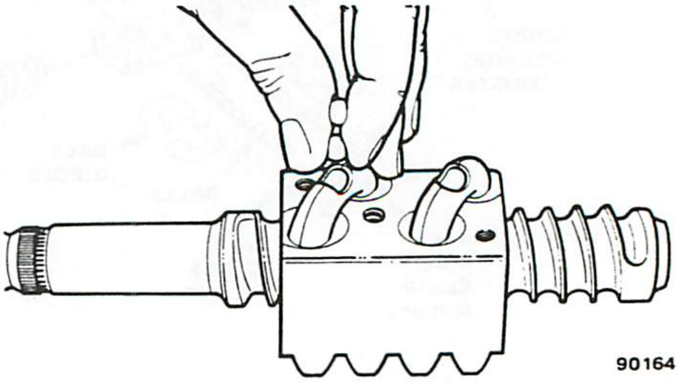

Fig. 2K-7 Installing Bearings in Ball Nut Circuits

NOTE: *To ease ball bearing installation, rotate the wormshaft back and forth slightly while inserting the bearings.*

(7) Position ball guide clamp on ball nut and install clamp attaching screws. Tighten screws to 4 foot-pounds (6 N•m) torque.

(8) Lubricate wormshaft threads with chassis grease and thread shaft in and out of ball nut to circulate grease.

CAUTION: *To avoid damaging the tangs on the ball guide ends, do not not allow the wormshaft to bottom in either direction.*

(9) Lubricate wormshaft upper bearing with chassis grease and install bearing on wormshaft.

Worm Bearing Adjuster

Disassembly

(1) Remove wormshaft lower bearing retainer from worm bearing adjuster. Use screwdriver to pry retainer out of adjuster (fig. 2K-8).

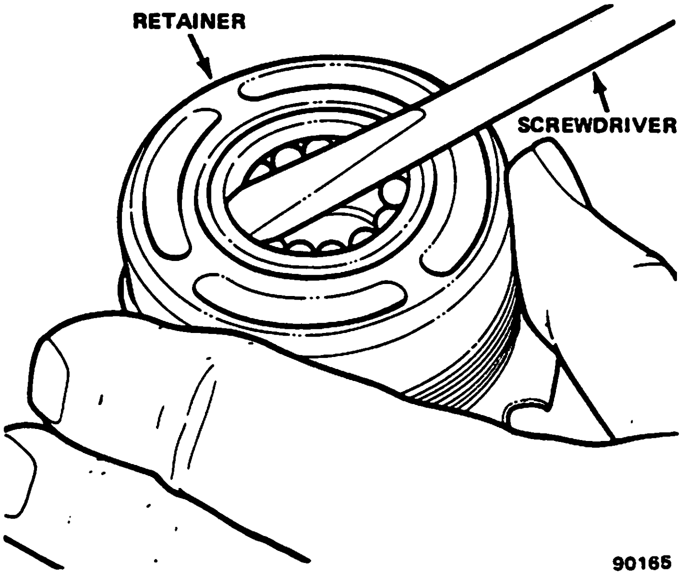

Fig. 2K-8 Removing Wormshaft Lower Bearing Retainer

(2) Remove wormshaft lower bearing from adjuster.

Cleaning and Inspection

Clean parts in solvent and dry using clean cloths only. Inspect all components for wear or damage and also inspect the bearing for flat spots or scoring. If either the lower bearing or bearing cup is damaged, both parts must be replaced.

Assembly

(1) If lower bearing cup is to be replaced, remove old cup and install replacement as follows:

(a) Install spare locknut on worm bearing adjuster and clamp adjuster in vise. Clamp vise jaws on locknut only.

(b) Assemble Puller J-5822 and Slide Hammer J-2619-01 (fig. 2K-9). Position puller legs under bearing cup and tighten puller screw to expand and hold legs in position. Bump outward with slide hammer weight to remove bearing cup.

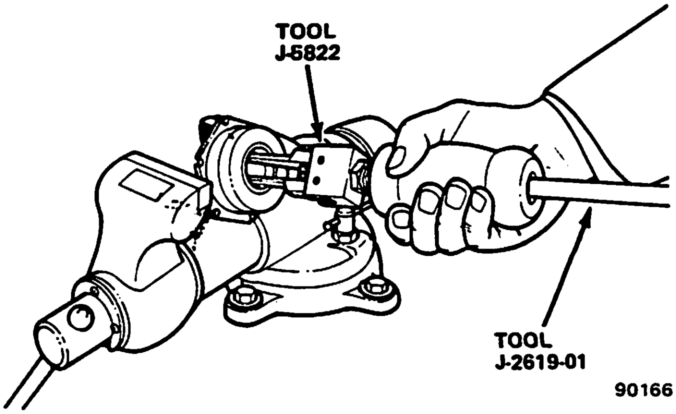

Fig. 2K-9 Removing Wormshaft Lower Bearing Cup

(c) Remove adjuster from vise and remove spare locknut from adjuster.

(d) Install replacement bearing cup in adjuster using Tool J-5755 (fig. 2K-10).

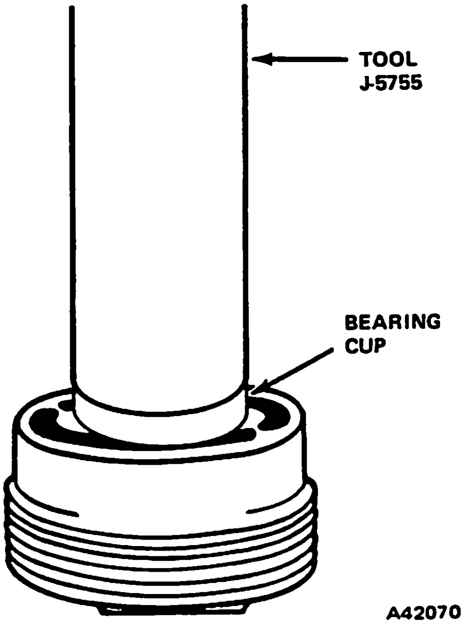

Fig. 2K-10 Installing Wormshaft Lower Bearing Cup

(2) Lubricate lower bearing with chassis grease and install bearing in adjuster.

(3) Install lower bearing retainer in adjuster. If necessary, tap retainer lightly with plastic mallet to seat it.

Steering Gear Housing and Pitman Shaft

Disassembly

(1) Remove pitman shaft and wormshaft seals from housing. Use screwdriver to pry seals out (fig. 2K-11).

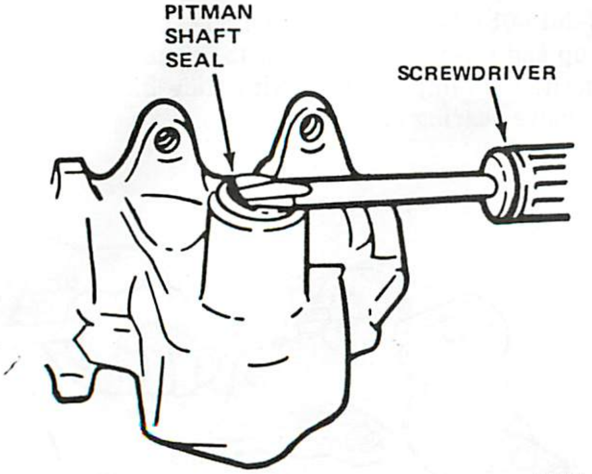

Fig. 2K-11 Removing Pitman Shaft and Wormshaft Seal

(2) Remove adjuster screw and shim from pitman shaft T-slot (if not removed previously). Retain screw and shim for end play check.

Cleaning and Inspection

Clean the housing and pitman shaft with solvent and dry using clean cloths or compressed air. Inspect the housing for cracks, porosity, damaged threads and gasket surface scoring or distortion. Inspect the pitman shaft bore contact surface and sector teeth for wear, pitting, or other damage.

Insert the pitman shaft in the housing bore and check for shaft or housing bore wear. The shaft should exhibit a smooth, bind free fit and not display any visible side play when installed in the bore. If the shaft appears loose and is not visibly worn, trial fit a new shaft in the housing bore. If the new shaft is also loose, replace the housing. However, if the new shaft fits properly, replace the pitman shaft.

Measure adjuster screw fit and end play in the pitman shaft T-slot. When installed, the screw must rotate freely and not bind in any position. Measure end play by inserting a feeler gauge between the screw head and T-slot surface (fig. 2K-12). End play must not exceed 0.002 inches (0.05 mm). If end play exceeds specified limit, select and install a replacement shim that will provide the specified clearance. Shims are furnished in four thicknesses; 0.063, 0.065, 0.067 and 0.069 inch (1.60, 1.65, 1.70 and 1.75 mm) and are available in kit form.

Inspect the wormshaft upper bearing and bearing cup for wear, looseness, flat spots, pitting, cracks, or other damage. If either the bearing or bearing cup is damaged, both parts must be replaced. If the cup is loose in the housing, trial fit a new cup. If the new cup is also loose, replace the housing. If the new cup fits properly, replace only the bearing cup.

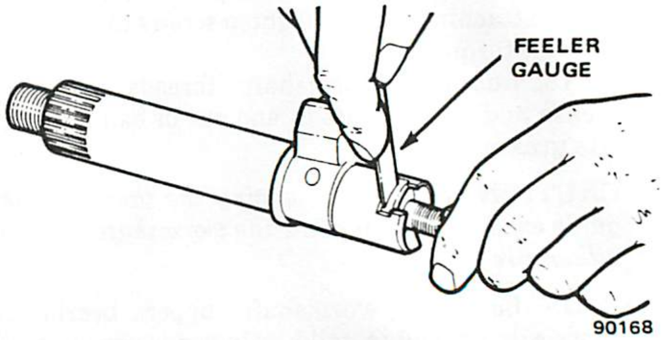

Fig. 2K-12 Measuring Adjuster Screw End Play

Assembly

(1) If wormshaft upper bearing cup is to be replaced, remove old cup using hammer and brass punch (fig. 2K-13).

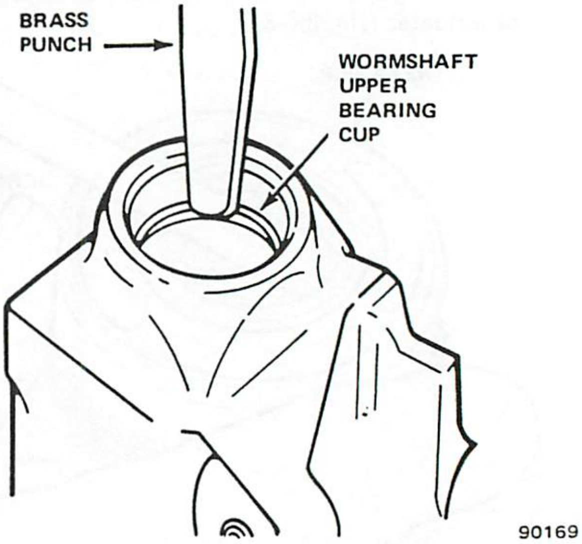

Fig. 2K-13 Removing Wormshaft Upper Bearing Cup

(2) Install replacement bearing cup using Installer J-5755 (fig. 2K-14).

NOTE: *Do not install the wormshaft or pitman shaft seals at this time. Refer to Assembly and Adjustment.*

ASSEMBLY AND ADJUSTMENT

(1) Lubricate all components with chassis grease if not lubricated previously.

(2) Place gear housing in vise. Clamp vise jaws on housing mounting bosses only.

(3) Install wormshaft and ball nut in housing.

CAUTION: *Be sure the ball nut is installed with the deep side of the ball nut teeth facing the side cover opening.*

(4) Install worm bearing adjuster in housing and tighten adjuster only enough to remove wormshaft end play.

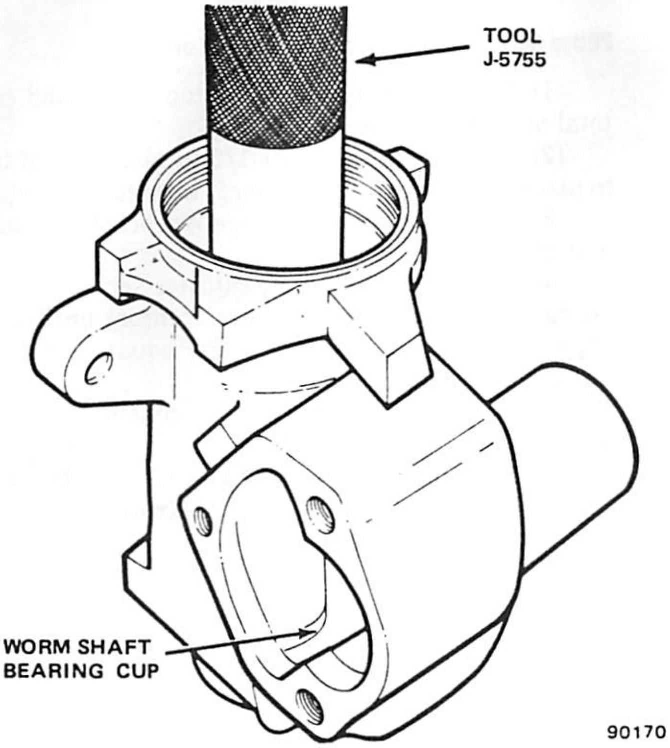

Fig. 2K-14 Installing Wormshaft Upper Bearing Cup

(5) Install locknut on worm bearing adjuster but do not tighten locknut at this time.

(6) Pack steering gear housing with as much chassis grease as possible.

NOTE: *In order to pack the maximum amount of grease into the housing, the ball nut must be moved back and forth for better access to the housing interior. Rotate the wormshaft in one direction until ball nut travel ceases. Pack the unobstructed housing end full of grease; then rotate the shaft in the opposite direction and repeat the packing procedure.*

(7) Place ball nut in centered position. Rotate wormshaft from stop to stop and count total number of turns. Turn wormshaft back 1/2 number of turns to center ball nut.

(8) Lubricate pitman shaft with chassis grease and install shaft in housing. Engage center tooth of shaft in center groove of ball nut (fig. 2K-15).

(9) Coat replacement side cover gasket with chassis grease and position gasket on housing side cover opening.

(10) Install end play shim on adjuster screw and thread screw into side cover to depth of 2-3 threads.

(11) Slide adjuster screw into pitman shaft T-slot and turn screw counterclockwise to thread it into cover. Stop turning screw when side cover almost contacts gasket.

(12) Align gear housing and side cover bolt holes and install cover attaching bolts finger-tight only (do not attempt to seat cover on housing by tightening bolts).

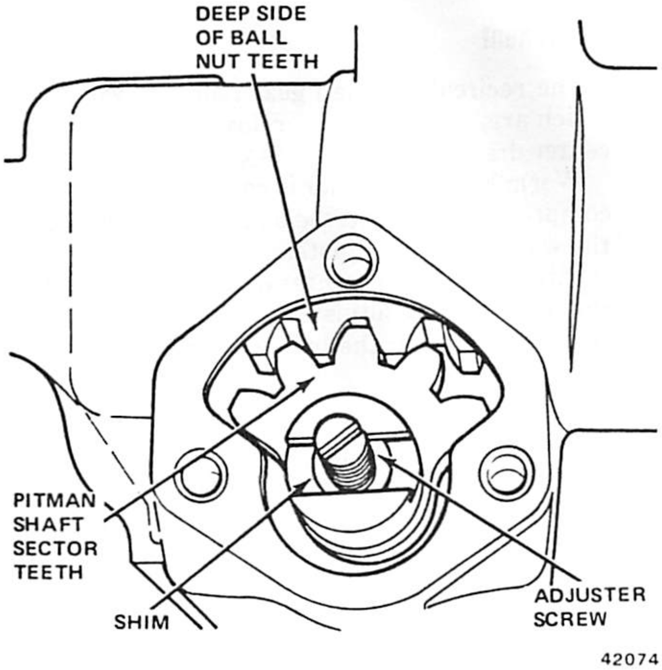

Fig. 2K-15 Pitman Shaft and Ball Nut In Centered Position

(13) Tighten adjuster screw until it bottoms and back off screw 1/2 turn.

(14) Tighten side cover bolts to 30 foot-pounds (41 N•m) torque.

(15) Install pitman shaft and wormshaft seals as follows:

(a) Wrap 0.005 inch (0.1 mm) thick shim stock (or single layer of thinnest tape available) around shaft splines and threads. Shim stock (or tape) will serve as seal protecter when seals are installed.

(b) Lubricate seals with chassis grease. Slide each seal over protective material and down shaft until seal contacts housing.

(c) Start seals into housing seal seats by hand. Complete seal installation by tapping seals into place using plastic mallet. Be sure each seal is fully seated in housing.

CAUTION: *Some type of protective wrap must be used during seal installation. If the seals are installed over exposed shaft splines or threads, the seal lips could be cut or distorted resulting in leakage after assembly.*

(16) Check gear operation. With adjuster screw backed off, wormshaft should rotate freely and without bind in either direction. Also check for grease leaks past seals. If gear binds, repair as necessary and recheck operation. If seals leak, replace them and recheck operation.

(17) Adjust steering gear worm bearing preload and overcenter drag torque. Refer to following adjustment procedure.

Adjustment

The recirculating ball gear requires two adjustments which are, worm bearing preload and pitman shaft overcenter drag torque.

Worm bearing preload is controlled by the amount of compression force exerted on the wormshaft bearings by the worm bearing adjuster.

Pitman shaft overcenter drag torque is controlled by the pitman shaft adjuster screw which determines the clearance between the ball nut and pitman shaft sector teeth.

CAUTION: *The following adjustment procedures must be performed exactly as described and in the sequence outlined. Failure to do so can result in damage to the gear internal components and improper steering response. Always adjust worm bearing preload first and pitman shaft overcenter drag torque last.*

Worm Bearing Preload Adjustment

(1) Tighten worm bearing adjuster until it bottoms, then back off adjuster 1/4 turn.

(2) Install socket and Torque Wrench J-7754 on splined end of wormshaft (fig. 2K-16).

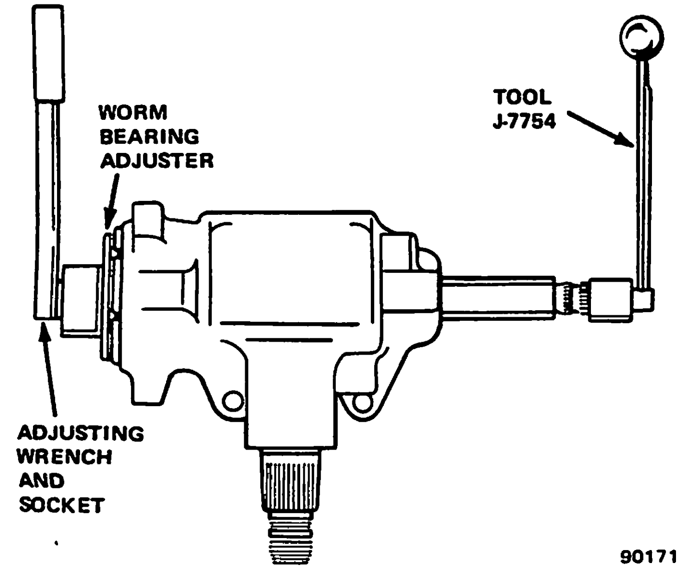

Fig. 2K-16 Adjusting Worm Bearing Preload Torque

(3) Rotate wormshaft clockwise to stop; then back off shaft 1/2 turn.

(4) Tighten worm bearing adjuster until torque required to rotate wormshaft is 5 to 8 inch-pounds (0.60 to 0.90 N•m).

CAUTION: *The preload adjustment must be made with the wormshaft turned back no more than 1/2 turn from either the right or left turn stop positions.*

(5) Tighten worm bearing adjuster locknut to 90 foot-pounds (122 N•m) torque. Recheck wormshaft rotating torque and readjust if necessary.

(6) Record worm bearing preload torque reading.

Pitman Shaft Overcenter Drag Torque Adjustment

(1) Rotate wormshaft from stop-to-stop and count total number of turns.

(2) Turn wormshaft back 1/2 total number of turns to place ball nut and pitman shaft in centered position.

(3) Install socket and Torque Wrench J-7754 on pitman shaft splines (fig. 2K-17).

(4) Tighten pitman shaft adjuster screw (while rotating shaft back and forth over center) until torque required to rotate shaft over center equals worm bearing preload setting.

(5) Rotate shaft over center and continue tightening adjuster screw until drag torque is increased by additional 4 to 10 inch-pounds (0.45 to 1.13 N•m) but do not exceed total of 16 inch-pounds (1.81 N•m).

CAUTION: *The total amount of over center drag torque (worm bearing preload setting plus additional 4 to 10 inch-pounds) must not exceed combined total of 16 inch-pounds (1.81 N•m).*

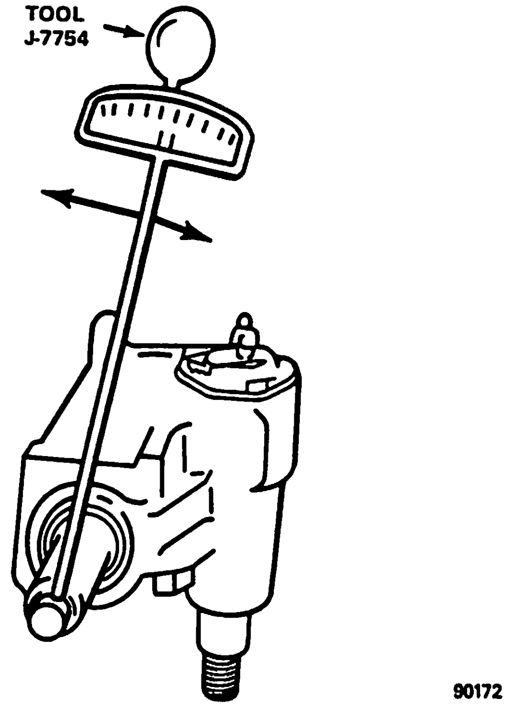

Fig. 2K-17 Adjusting Pitman Shaft Overcenter Drag Torque

(6) Hold adjuster screw in position using screwdriver and tighten adjuster screw locknut to 23 foot-pounds (31 N•m) torque. Do not allow screw to turn when tightening locknut.

NOTE: *If the adjuster screw is allowed to turn when the locknut is tightened, the entire drag torque adjustment procedure will have to be performed once again.*

(7) Recheck overcenter drag torque and readjust if necessary.

SPECIFICATIONS

Manual Steering Gear Specifications

Gear-Type	Recirculating Ball
Ratio	24:1
Bearings	
Upper	Ball
Lower	Ball
Adjustments:	
Worm Bearing Preload	8 in-lbs. (0.90 N·m)
Pitman Shaft Overcenter Drag Torque	4-10 in-lbs. (0.45-1.13 N·m) in addition to 8 in-lbs. (0.90 N·m) worm bearing preload for a total of 16 in-lbs. (1.8 N.m) maximum
Adjuster Screw End Play	0.002 in. (0.05 mm)

80435A

Torque Specifications

Service Set-To Torques should be used when assembling components. Service In-Use Recheck Torques should be used for checking a pre-tightened item.

	USA (ft-lbs)		Metric (N·m)	
	Service Set-To Torque	Service In-Use Recheck Torque	Service Set-To Torque	Service In-Use Recheck Torque
Intermediate Shaft Coupling Clamp Bolt	45	40-50	61	54-68
Pitman Arm Nut	185	160-210	251	217-285
Steering Gear Mounting Bracket-to-Gear Bolts (CJ)	70	60-80	95	81-108
Steering Gear Mounting Bracket-toTie Plate Bolt (CJ)	55	50-60	75	68-81
Steering Gear Mounting Bolts (Cke., Wag., Trk.,)	70	60-80	95	81-108
Side Cover Bolts	30	25-35	41	34-47
Adjuster Screw Locknut	23	18-27	31	24-37
Worm Bearing Adjuster Locknut	90	70-110	122	95-149

All torque values given in foot-pounds and newton-meters with dry fits unless otherwise specified.

60704

Tools

BEARING CUP INSTALLER J-5755

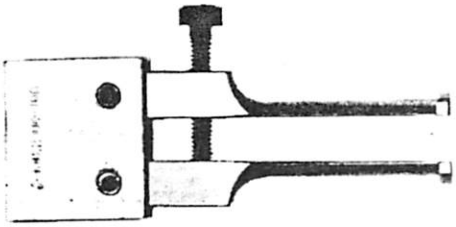

BEARING CUP PULLER J-5822

TORQUE WRENCH J-7754

SLIDE HAMMER J-2619-01

J-6632 PITMAN ARM PULLER

80439

NOTES

POWER STEERING GEAR AND PUMP

2L

SECTION INDEX

GENERAL INFORMATION

GENERAL

The power steering system consists of a power steering gear, hydraulic pump, and interconnecting hoses. The system fluid supply is contained in a reservoir mounted on the pump. Fluid from the pump is supplied to the gear through the interconnecting pressure and return hoses. The pump is operated by a drive belt mounted on pulleys attached to the pump shaft and engine crankshaft.

Two different ratio steering gear units are used. CJ and Scrambler models use a constant ratio gear with a 17.5:1 steering ratio. Cherokee, Wagoneer and Truck models use a variable ratio gear with a 16:1 ratio on center and 13:1 ratio at full lock.

Although the steering ratios of the two units differ, exterior appearance and service procedures for both units are the same. However, the internal components of the two gears are not interchangeable.

A vane-type power steering pump with a combination flow control/relief valve is used on all models. Two valve calibrations are used. On CJ and Scrambler models, the valve is calibrated to open at 1100 psi (7 584 kPa). On Cherokee, Wagoneer and Truck models, the valve is calibrated to open at 1500 psi (10 342 kPa).

The power steering gear is designed to operate manually if a system malfunction should ever occur. This feature provides the driver with continued steering control of the vehicle. In this condition, the gear operates like a manual steering gear; hydraulic fluid is bypassed through the gear valve body to allow manual operation.

NOTE: *The power steering gear and pump form a closed system. Contaminants or foreign material must not be allowed to enter the system at any point. If either the gear or pump become contaminated, or incur damage extensive enough to produce debris, both components must be disassembled, cleaned, and serviced.*

DESCRIPTION AND OPERATION

Steering Gear

The power steering gear is a recirculating ball-type unit (fig. 2L-1). Steel ball bearings act as a rolling thread between the steering gear wormshaft and rack piston.

Two different ratio gears are used. CJ and Scrambler models use a constant ratio gear with 17.5:1 steering ratio. Cherokee, Wagoneer and Truck models use a variable ratio gear with 16:1 steering ratio on center and 13:1 at full lock. Although the two gears have different steering ratios, exterior appearance, diagnosis, and service procedures are the same for both.

Steering gear wormshaft fore and aft thrust is controlled by a bearing and two races at the lower end, and a bearing assembly in the adjuster plug at the upper end. The lower bearing races are conical in shape. This design maintains constant preload on the wormshaft to

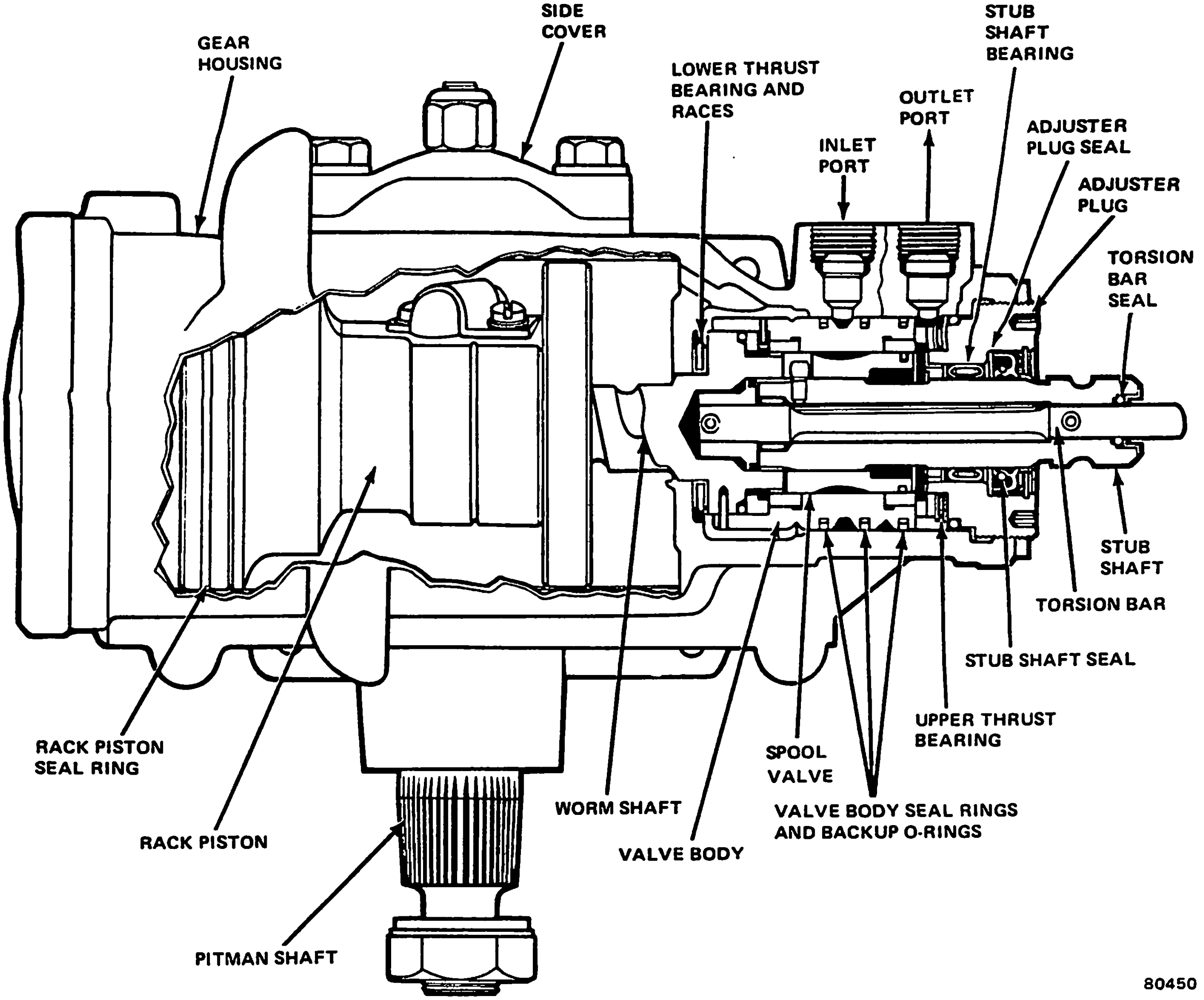

Fig. 2L-1 Power Steering Gear

prevent loss of thrust bearing preload. The adjuster plug provides initial worm bearing preload and service adjustment.

In a right-turn position, the rack piston moves upward within the gear. In a left-turn position, the rack piston moves downward within the gear. The rack piston teeth mesh with the pitman shaft sector teeth. The sector is forged as an integral part of the pitman shaft. Turning the wormshaft also turns the pitman shaft which, through mechanical linkage, turns the wheels.

Power Steering Pump

A vane-type, constant displacement hydraulic pump is used to develop system fluid pressure (fig. 2L-2). The pump has an integral reservoir that contains the system fluid supply.

The reservoir cap is vented to maintain atmospheric pressure within the reservoir and allow air trapped in the system to escape. A dipstick mounted in the reservoir cap is used to check system fluid level.

System operating pressures are maintained by a combination flow control/relief valve located in the pump (fig. 2L-2). The relief section of the valve prevents excessive system pressure buildup.

Hydraulic Assist

An open center, three position, rotary-type valve body is used to control fluid flow within the gear (fig. 2L-1). Pump supplied fluid enters the valve body through a pressure port in the gear housing. The valve then directs fluid to the rack piston through passages in the housing.

The valve body, spool valve, torsion bar, and stub shaft (which is pinned to the torsion bar) are connected to the front wheels through mechanical linkage.

Because of the pressure exerted on the front wheels by vehicle weight, the wheels and valve body tend to resist

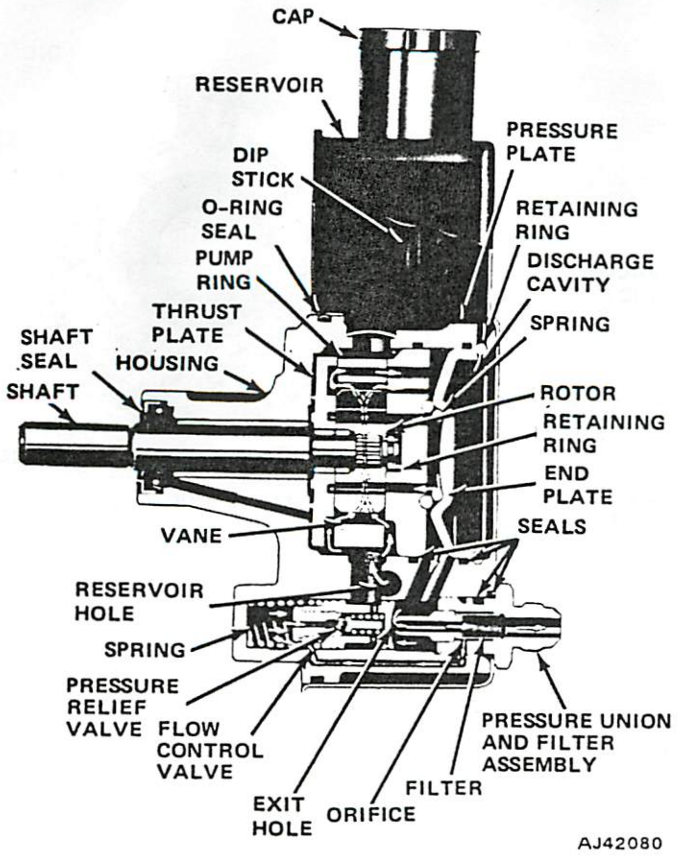

Fig. 2L-2 Power Steering Pump

any turning effort applied at the steering wheel. As front wheel resistance to turning effort increases, the torsion bar (which is pinned to the stub shaft) deflects. Since the spool valve is connected to the stub shaft by a locating pin, torsion bar deflection causes the spool valve to rotate within the valve body. As the spool valve rotates, fluid directional passages in the valve are brought into alignment with matching passages in the valve body. When these passages are aligned, high pressure fluid from the pump is directed through the passages and against either side of the rack piston to provide hydraulic assist.

Torsion bar deflection provides the required amount of steering gear "road feel." If the bar should ever break, road feel would be lost but the steering system would still function due to auxiliary locking tabs on the stub shaft. In this situation, the gear would operate as a manual-type recirculating ball steering gear.

Neutral (Straight-Ahead) Position

In this position, fluid does not enter the rack piston chamber. Fluid from the pump flows through the open-center valve body and back to the pump reservoir.

The valve body remains in the open center position at all times, except when turning, to reduce fluid and pump friction losses. In addition, the gear is always filled with fluid to lubricate internal components and absorb road shock.

Right Turn Position

The valve body is held in position by the resistance to movement of the front wheels. When the steering wheel is turned to the right, torsion bar deflection causes the spool valve to rotate within the valve body.

As the spool valve rotates, the spool valve fluid return grooves are closed off while the right turn grooves are aligned with high pressure fluid grooves in the valve body (fig. 2L-3). The spool valve left turn grooves are closed off from pump pressure and are aligned with the valve body fluid return grooves. In this position, the valve body directs high presure fluid into the lower end of the rack piston chamber to force the rack piston upward and apply additional turning effort to the pitman shaft (fig. 2L-3).

As the valve body directs fluid against the lower end of the rack piston, fluid in the upper end of the gear simultaneously flows back to the reservoir through valve body return grooves. When front wheel resistance to turning effort increases, torsion bar deflection causes additional spool valve rotation. This exposes more of the spool valve right turn grooves to the valve body pressure grooves increasing fluid pressure exerted on the rack piston.

When the driver stops applying turning effort at the steering wheel, the torsion bar unwinds returning the spool valve to the neutral (straight-ahead) position. At this point, fluid pressure on each end of the rack piston is equalized once again and steering geometry causes the front wheels to resume a straight-ahead position.

Left Turn Position

In the left turn position, the torsion bar, spool valve, and valve body operate the same as in a right turn except that valve rotation is now reversed (fig. 2L-4). This causes the valve body to channel high pressure fluid into the upper end of the rack piston chamber forcing the rack piston downward (fig. 2L-4). Fluid in the lower end of the gear flows back to the pump reservoir through the valve body and steering gear return port.

When the driver stops applying turning effort at the steering wheel, the torsion bar unwinds returning the spool valve to the neutral (straight-ahead) position. As in the right turn position, fluid pressure on each end of the rack piston is equalized again and steering geometry causes the front wheels to resume a straight-ahead position.

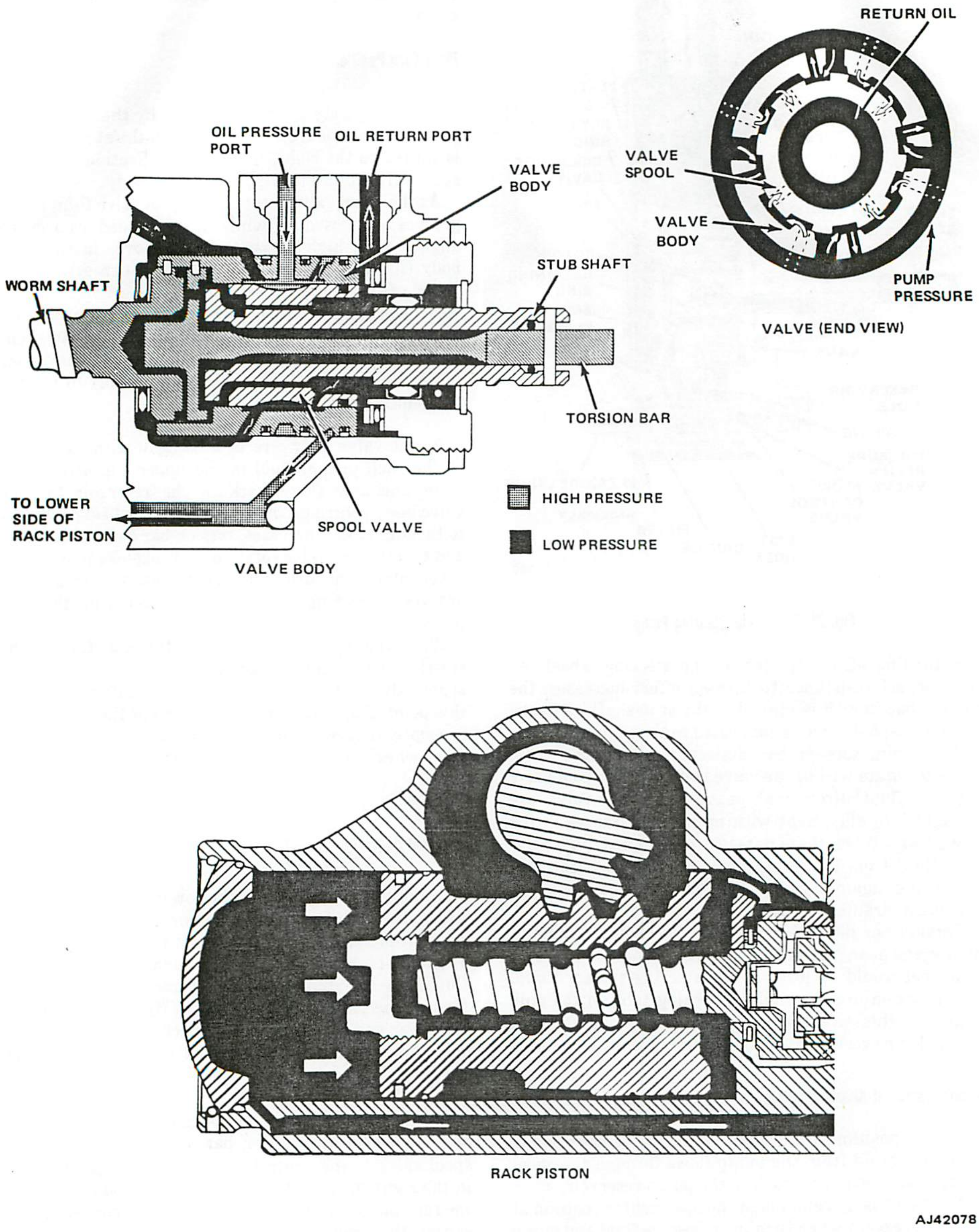

Fig. 2L-3 Fluid Flow—Right Turn Position

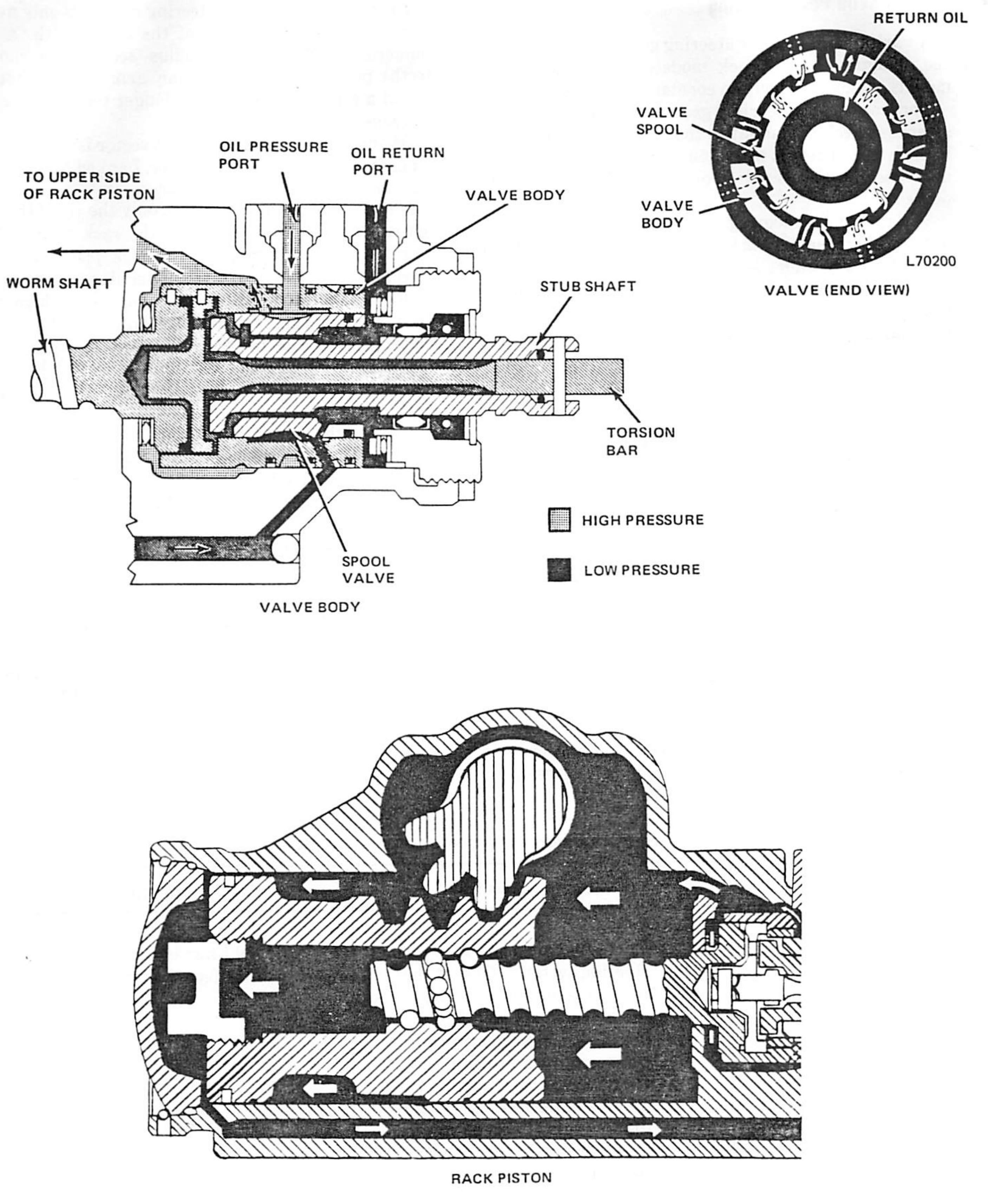

Fig. 2L-4 Fluid Flow—Left Turn Position

Variable Ratio Power Steering

A variable ratio power steering gear is used on Cherokee, Wagoneer and Truck models. CJ and Scrambler models are equipped with a constant ratio steering gear.

The ratio of a steering gear is the relationship of steering wheel movement to that of the front wheels. It is described in terms of the number of degrees of steering wheel rotation required to turn the front wheels one degree.

Variable ratio steering is accomplished by using a pitman shaft sector that has one long center tooth flanked by two short sector teeth. This is opposed to a constant ratio gear where all sector teeth are of equal length (fig. 2L-5). Because the variable ratio gear has unequal length sector teeth, companion changes are also made in the rack piston teeth (fig. 2L-5).

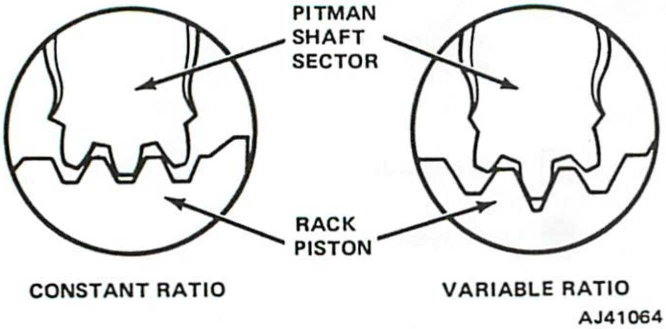

Fig. 2L-5 Rack and Sector Comparison

Since the sector is basically a series of levers, any movement of the rack piston causes the sector to swing the pitman arm in the same ratio. In other words, it turns the pitman arm the same number of degrees with each sector tooth.

To increase or decrease steering ratio, it is only necessary to change the length of the sector teeth. A low numerical ratio (smaller radius sector with shorter teeth) produces greater pitman arm movement than would a high ratio sector with longer teeth and greater leverage.

On this basis, the variable ratio sector is in reality one long, high ratio lever at the center, flanked by two lower ratio levers for left and right turns.

In the straight-ahead position, only the tip of the long center tooth is in contact with the rack piston. As a result, initial movement of the rack piston in either direction produces a relatively small response of the sector and pitman arm. This is due to the high ratio produced by a long lever relationship.

Because of this relationship, the steering ratio remains a nearly constant 16:1 for the first 40 degrees of steering wheel movement in either direction from center.

Turning the steering wheel further reduces the length of the lever. This moves the point of contact down the side of the center tooth decreasing the radius and providing a steering ratio of 13:1 at full lock.

SERVICE DIAGNOSIS

When diagnosing suspected power steering system malfunctions, refer to the Service Diagnosis Charts in this section for probable causes and indicated repair procedures.

To avoid ineffective or unneccessary repair, do not attempt to correct a malfunction until an accurate diagnosis has been made. Utilize the diagnosis charts, hydraulic pressure test and leak diagnosis procedures before servicing the gear or pump.

Service Diagnosis—Steering Gear and Pump

Condition	Possible Cause	Correction
HISSING NOISE IN STEERING GEAR	(1) There is some noise in all power steering systems. One of the most common is a hissing sound most evident at standstill parking. There is no relationship between this noise and performance of the steering. Hiss may be expected when steering wheel is at end of travel or when slowly turning at standstill.	(1) Slight hiss is normal and does not affect steering.
RATTLE OR CHUCKLE NOISE IN STEERING GEAR	(1) Gear loose on frame.	(1) Tighten gear-to-frame mounting bolts.

60702A

Service Diagnosis—Steering Gear and Pump (Continued)

Condition	Possible Cause	Correction
RATTLE OR CHUCKLE NOISE IN STEERING GEAR (CONTINUED)	(2) Steering linkage looseness.	(2) Check linkage pivot points for wear. Replace if necessary.
	(3) Pressure hose touching other parts of vehicle.	(3) Adjust hose position. Do not bend tubing by hand.
	(4) Insufficient pitman shaft spool over center drag torque. **NOTE:** A slight rattle may occur on turns because of increased clearance off the "high point." This is normal and clearance must not be reduced below specified limits to eliminate this slight rattle.	(4) Adjust to specifications.
	(5) Loose pitman arm.	(5) Tighten pitman arm nut to specifications, or replace nut.
SQUAWK NOISE IN STEERING GEAR WHEN TURNING OR RECOVERING FROM A TURN	(1) Damper O-ring on valve cut.	(1) Replace damper O-ring.
CHIRP NOISE IN STEERING PUMP	(1) Loose or damaged belt.	(1) Adjust belt tension or replace belt.
BELT SQUEAL (PARTICULARLY NOTICEABLE AT FULL WHEEL TRAVEL AND STAND STILL PARKING)	(1) Loose or damaged belt.	(1) Adjust belt tension or replace belt.
GROWL NOISE IN STEERING PUMP	(1) Excessive back pressure in hoses or steering gear caused by restriction.	(1) Locate restriction and correct. Replace part if necessary.
GROWL NOISE IN STEERING PUMP (PARTICULARLY NOTICEABLE AT STAND STILL PARKING)	(1) Scored pressure plates, thrust plate or rotor.	(1) Replace parts and flush system.
	(2) Extreme wear of cam ring.	(2) Replace parts.
GROAN NOISE IN STEERING PUMP	(1) Low oil level.	(1) Fill reservoir to proper level.
	(2) Air in the oil or loose pressure hose connection.	(2) Tighten connector to specified torque. Bleed system by operating steering from right to left-full turn.
RATTLE NOISE IN STEERING PUMP	(1) Vanes not installed properly.	(1) Install properly.
	(2) Vanes sticking in rotor slots.	(2) Free up by removing burrs, varnish, or dirt.

607028

Service Diagnosis—Steering Gear and Pump (Continued)

Condition	Possible Cause	Correction
WHINE NOISE IN STEERING PUMP	(1) Pump shaft bearing scored.	(1) Replace housing and shaft. Flush system.
POOR RETURN OF STEERING WHEEL TO CENTER	(1) Tires not properly inflated.	(1) Inflate to specified pressure.
	(2) Lack of lubrication in linkage and ball studs.	(2) Lube linkage and ball studs.
	(3) Lower coupling flange rubbing against steering gear adjuster plug.	(3) Loosen pinch bolt and assemble properly.
	(4) Improper front wheel alignment	(4) Check and adjust as necessary. With front wheels still on alignment pads of front-end machine, disconnect pitman arm from pitman shaft. Turn front wheels by hand. If wheels will not turn or turn with considerable effort, determine if linkage or ball studs are binding.
	(5) Steering linkage binding.	(5) Replace rod ends.
	(6) Ball studs binding.	(6) Replace ball studs.
	(7) Tight or frozen steering shaft bearings.	(7) Replace bearings.
	(8) Sticky or plugged spool valve.	(8) Remove and clean or replace valve.
	(9) Steering gear adjustments over specifications.	(9) Check adjustment with gear out of vehicle. Adjust as required.
	(10) Steering gear poppet valve installed incorrectly.	(10) Inspect and install valve correctly.
	(11) Return hose kinked.	(11) Replace hose.
VEHICLE LEADS TO ONE SIDE OR THE OTHER (KEEP IN MIND ROAD CONDITION AND WIND. TEST VEHICLE IN BOTH DIRECTIONS ON FLAT ROAD)	(1) Incorrect tire pressure.	(1) Check and adjust.
	(2) Front end misaligned.	(2) Adjust to specifications.
	(3) Unbalanced steering gear valve.	(3) Replace valve.
MOMENTARY INCREASE IN EFFORT WHEN TURNING WHEEL FAST TO RIGHT OR LEFT	(1) Low oil level in pump.	(1) Add power steering fluid as required.
	(2) Pump belt slipping.	(2) Tighten or replace belt.
	(3) High internal leakage.	(3) Check pump pressure. (See pressure test)

60702C

Service Diagnosis—Steering Gear and Pump (Continued)

Condition	Possible Cause	Correction
STEERING WHEEL SURGES OR JERKS WHEN TURNING WITH ENGINE RUNNING ESPECIALLY DURING PARKING	(1) Low oil level.	(1) Fill as required.
	(2) Loose pump belt.	(2) Adjust tension to specification.
	(3) Insufficient pump pressure.	(3) Check pump pressure. (See pressure test). Replace relief valve if defective.
	(4) Flow control valve sticking.	(4) Inspect for varnish or damage, replace if necessary.
LOOSE STEERING	(1) Steering gear loose on frame.	(1) Tighten attaching bolts to specified torque.
	(2) Steering gear flexible coupling loose on shaft or rubber disc mounting screws loose.	(2) Tighten flange pinch bolts. If serrations are not damaged, tighten upper flange to coupling nuts to specified torque.
	(3) Steering linkage rod ends worn.	(3) Replace rod ends.
	(4) Worn poppet valve (Gear).	(4) Replace poppet valve.
	(5) Insufficient wormshaft bearing preload.	(5) Adjust to specification with gear out of vehicle.
	(6) Insufficient overcenter drag torque.	(6) Adjust to specification with gear out of vehicle.
HARD STEERING OR LACK OF ASSIST	(1) Loose pump belt.	(1) Adjust belt tension to specification.
	(2) Low oil level in pump reservoir. NOTE: Low oil level will also result in excessive pump noise.	(2) Fill to proper level. If excessively low, check all lines and joints for evidence of external leakage. Tighten loose connectors.
	(3) Tires not properly inflated.	(3) Inflate to recommended pressure.
NOTE: If checks (1) through (3) do not reveal cause of hard steering, refer to pressure test.	(4) Sticky flow control valve. (5) Pump pressure low. (6) Pump internal leakage. (7) Gear internal leakage.	In order to diagnose conditions such as listed in (4), (5), (6), (7) a test of the entire power steering system using pressure test tool J-21567 is required.

60702D

Service Diagnosis—Steering Gear and Pump (Continued)

Condition	Possible Cause	Correction
FOAMING AERATED POWER STEERING FLUID, LOW FLUID LEVEL AND POSSIBLE LOW PRESSURE	(1) Air in fluid, and loss of fluid due to pump internal leakage causing overflow.	(1) Check for leak and correct. Bleed system. Extremely cold temperatures will cause system aeration should the oil level be low. If oil level is correct and pump still foams, remove pump from vehicle and separate reservoir from housing. Check welsh plug and housing for cracks. If plug is loose or housing is cracked, replace housing.
LOW PRESSURE DUE TO STEERING PUMP	(1) Flow control valve stuck or inoperative.	(1) Remove burrs or dirt or replace. Flush system.
	(2) Pressure plate not flat against cam ring.	(2) Correct.
	(3) Extreme wear of cam ring.	(3) Replace parts. Flush system.
	(4) Scored pressure plate, thrust plate, or rotor.	(4) Replace parts. Flush system.
	(5) Vanes not installed properly.	(5) Install properly.
	(6) Vanes sticking in rotor slots.	(6) Freeup by removing burrs, varnish, or dirt.
	(7) Cracked or broken thrust or pressure plate.	(7) Replace part.
LOW PRESSURE DUE TO STEERING GEAR	(1) Pressure loss in cylinder due to worn piston ring or badly worn housing bore.	(1) Remove gear for disassembly and inspection of ring and housing bore.
	(2) Leakage at valve rings, valve body-to-worm seal.	(2) Remove gear for disassembly and replace seals.

60702E

LEAK DIAGNOSIS

The actual source of power steering system fluid leaks should always be determined before attempting repair. Because inaccurate diagnosis can lead to ineffective repair, proper inspection procedures are necessary. The most common fluid leak sources are shown in figures 2L-6, 2L-7, and 2L-8.

Inspection Procedure

(1) Raise front of vehicle.

(2) Clean exterior surfaces of steering gear, pump, hoses, and fittings thoroughly.

(3) Check pump fluid level. Add or remove fluid as necessary.

(4) Check for aerated fluid (orange in color and full of bubbles) which can cause overflow from reservoir and be mistaken for leak.

(5) Check and tighten all hose connections at gear and pump. Do not exceed 30 foot-pounds (41 N•m) torque at any fitting.

(6) Start engine. Have helper turn steering wheel left and right several times while locating source of leak. Contact steering stops momentarily in each direction when turning wheel.

(7) Stop engine when leak source is identified.

Leak Diagnosis and Correction—Steering Gear

NOTE: *Refer to figures 2L-6 and 2L-7 for an illustration of steering gear leak sources.*

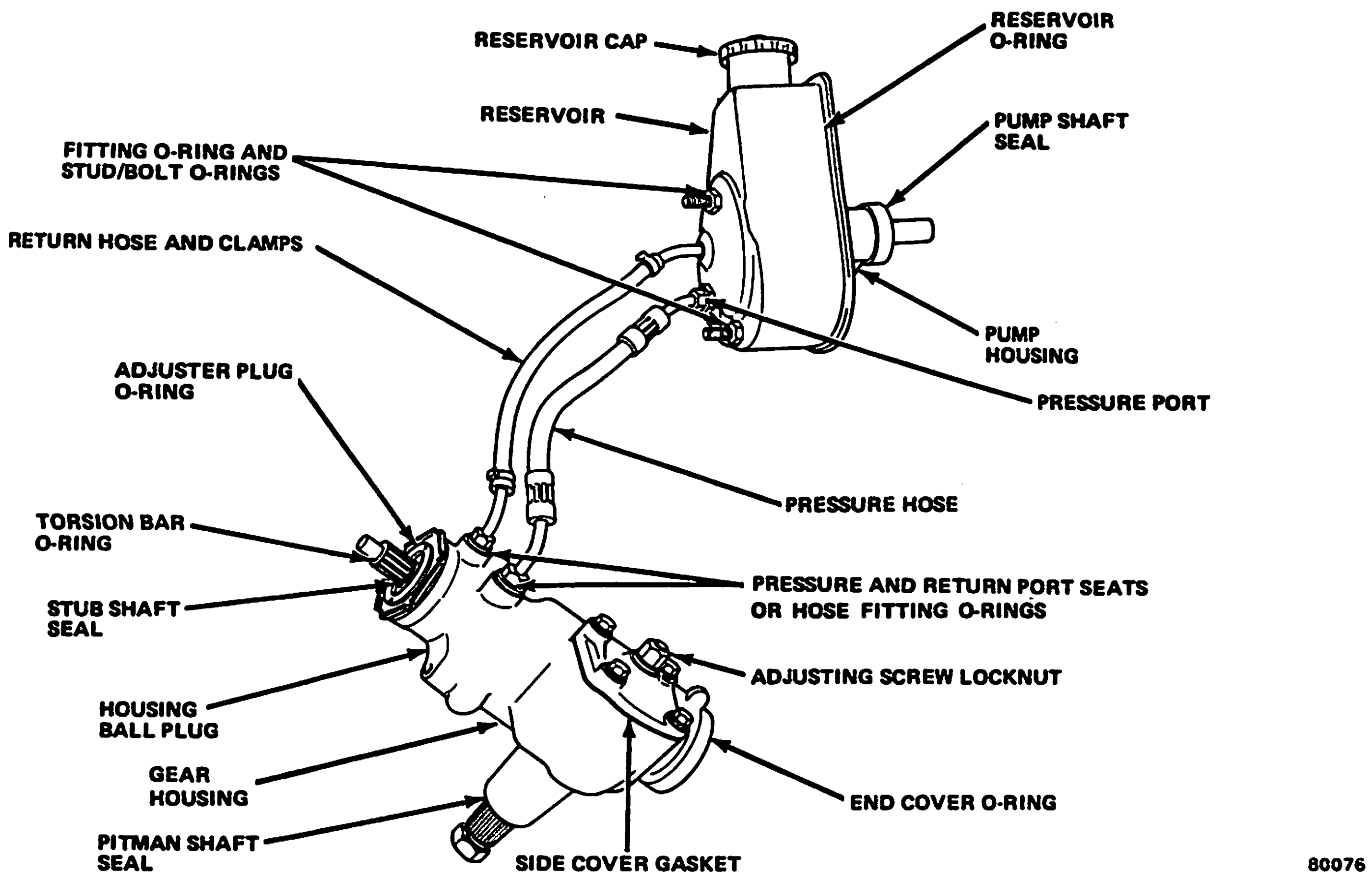

Fig. 2L-6 Power Steering System Leak Points

(1) If leak occurs from hose or hose fittings, replace hose and O-ring if equipped with metric thread fittings. If leak continues to occur at gear housing pressure or return port and hose or O-ring has been replaced, replace hose connector seats in gear housing or hose and O-ring if equipped with metric thread fittings.

CAUTION: *Some steering gear units may have metric thread pressure and return port and hose fittings that use an O-ring instead of connector seats (fig. 2L-7).*

(2) If leak occurs between adjuster plug and housing, replace adjuster plug O-ring.

(3) If leak occurs between stub shaft and stub shaft seal in adjuster plug, replace seal.

(4) If leak occurs from steering gear housing ball plug, seat plug in housing using blunt punch. Spray ball area with Loctite Solvent 7559, or equivalent.

Dry area using compressed air. Cover ball wth Loctite Sealant 290, or equivalent. Allow sealant to cure for approximately two hours before installing housing.

(5) If leak occurs between torsion bar and torsion bar seal, replace entire valve body assembly.

(6) If leak occurs at side cover gasket or locknut, replace gasket or locknut as necessary.

NOTE: *The locknut has a left-hand thread.*

(7) If leak occurs between pitman shaft and shaft seal, replace seal and check shaft for nicks, scores, burrs, or pitting. Remove minor surface imperfections using crocus cloth. Replace shaft if severely damaged.

(8) If leak occurs between end plug and housing, replace end plug O-ring seal.

(9) If leak is from crack or porous spot in gear housing, replace housing.

Leak Diagnosis and Correction—Pump

NOTE: *Refer to figure 2L-8 for an illustration of the various pump leak sources.*

(1) If leak occurred between pump union fitting and hose fitting, replace union and hose. If pump has metric thread union fitting, replace O-ring or hose and O-ring if damaged.

(2) If leak occurred between pump union fitting and pump body, replace pump union fitting O-rings.

(3) If leak occurred between reservoir and pump body, replace reservoir O-ring seal.

(4) If leak occurred between pump shaft and pump shaft seal, replace seal and check pump shaft for nicks, scores, burrs, or pitting.

(5) If leak is result of overfill condition, drain fluid from reservoir to correct level.

Gear Leak Points and Corrective Action

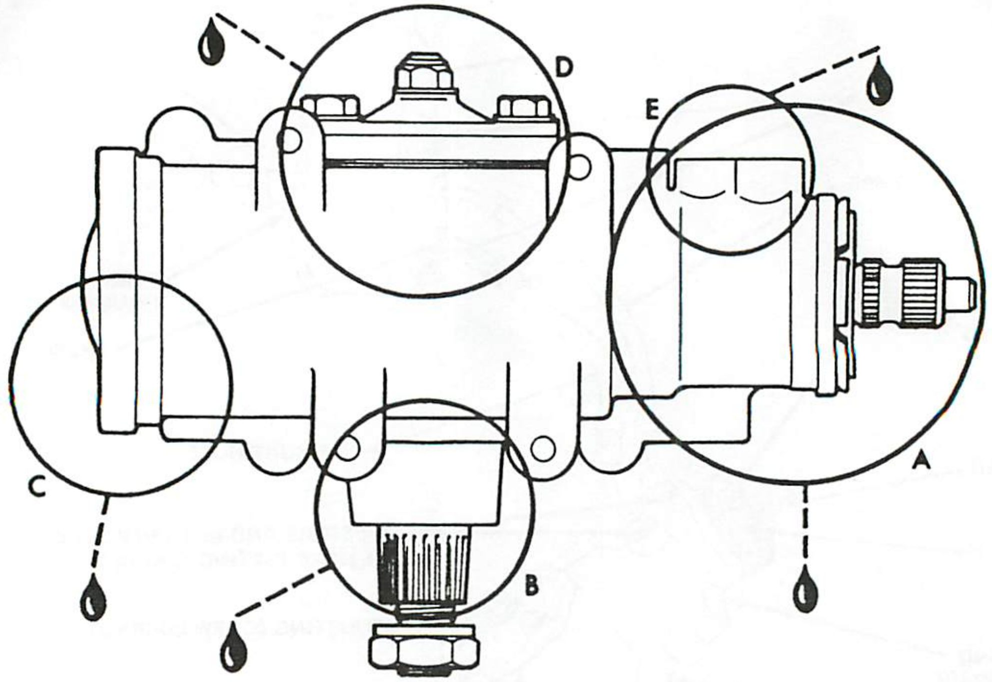

Leak Points

Pay particular attention to the exact source of leakage. Due to the proximity of the various seals, an incorrect diagnosis will result in ineffective repair.

Corrective Action

Replace adjuster plug O-ring seal.

Replace Dust and stub shaft seals.

If seepage is observed between the torsion bar and stub shaft, do not attempt repair. The rotary valve assembly must be replaced.

Seat housing ball with blunt punch. Spray ball area with Loctite solvent 75559 or equivalent, Dry ball area with compressed air. Apply Loctite sealant 290, or equivalent to ball area. Allow sealant to cure for approximately two hours before installing housing.

Replace both pitman shaft seals.

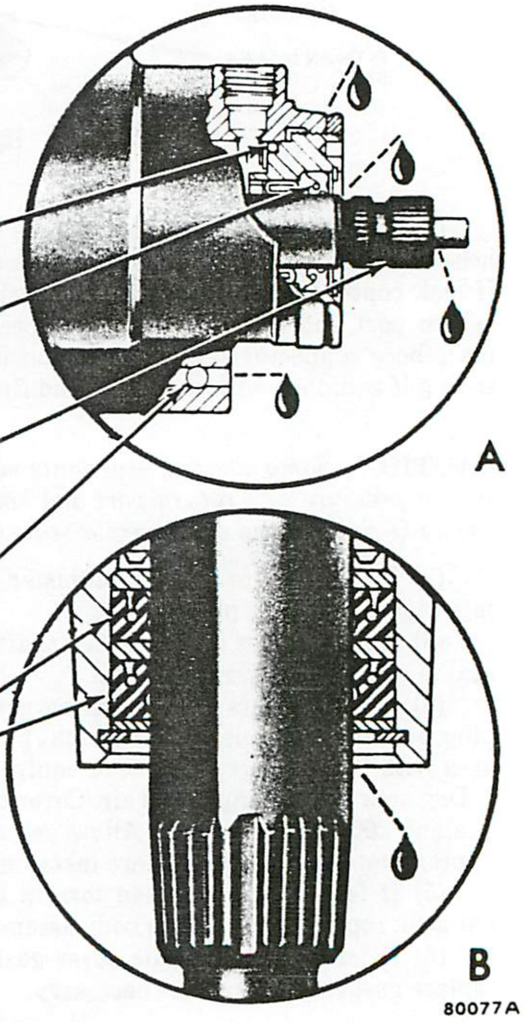

Fig. 2L-7 Steering Gear Leak Diagnosis and Corrective Action (View A)

Corrective Action (cont.)

Replace end plug O-ring seal.

Tighten nut to 35 foot-pounds (47 N·m) torque. Replace nut if leak persists.

Tighten side cover bolts to 50 foot-pounds (68 N·m) maximum. Replace side cover seal if leak persists. If side cover seal replacement is required, discard bolts and install replacement. Whenever the side cover is removed, install bolts supplied in overhaul kit.

If leak continues after tightening fitting nut to specified torque:

a. Loosen nut and rotate tubing to reseat. Tighten nut again and recheck. If leak persists, replace connector seats.

b. Remove hose and check sealing face for cracks. If flare is cracked, replace connector seats.

c. Replace brass connector seats and reface hose flare. Check threads in housing and on fitting nut. If nut threads are damaged, replace nut. If housing threads are damaged, replace both housing and nut.

CAUTION: Some steering gear units may be equipped with metric thread hose fittings that use O-ring seals. Replace the seal if it leaks or replace the hose and seal if the fitting is damaged.

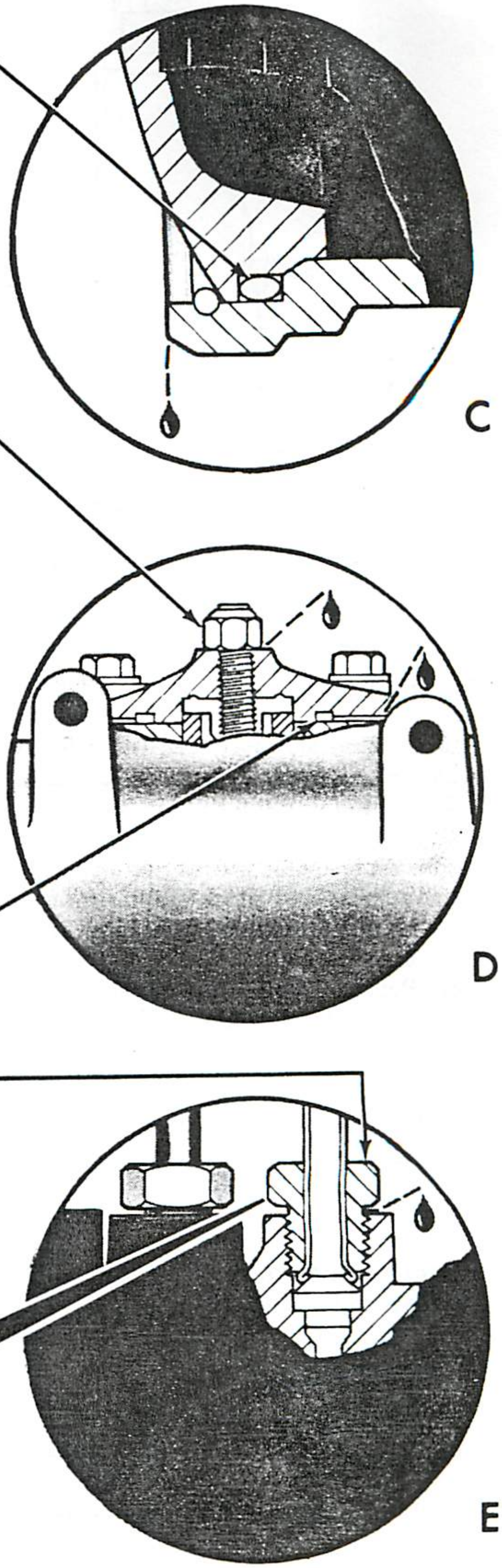

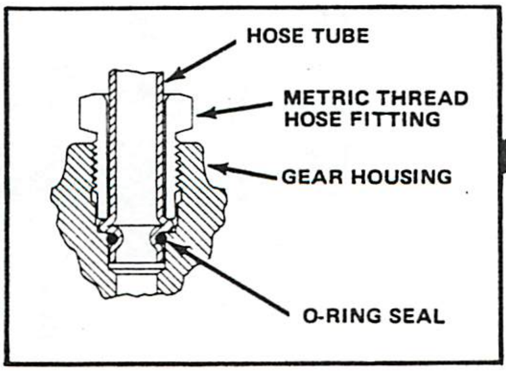

Fig. 2L-7 Steering Gear Leak Diagnosis and Corrective Action (View B)

Pump Leak Points and Corrective Action

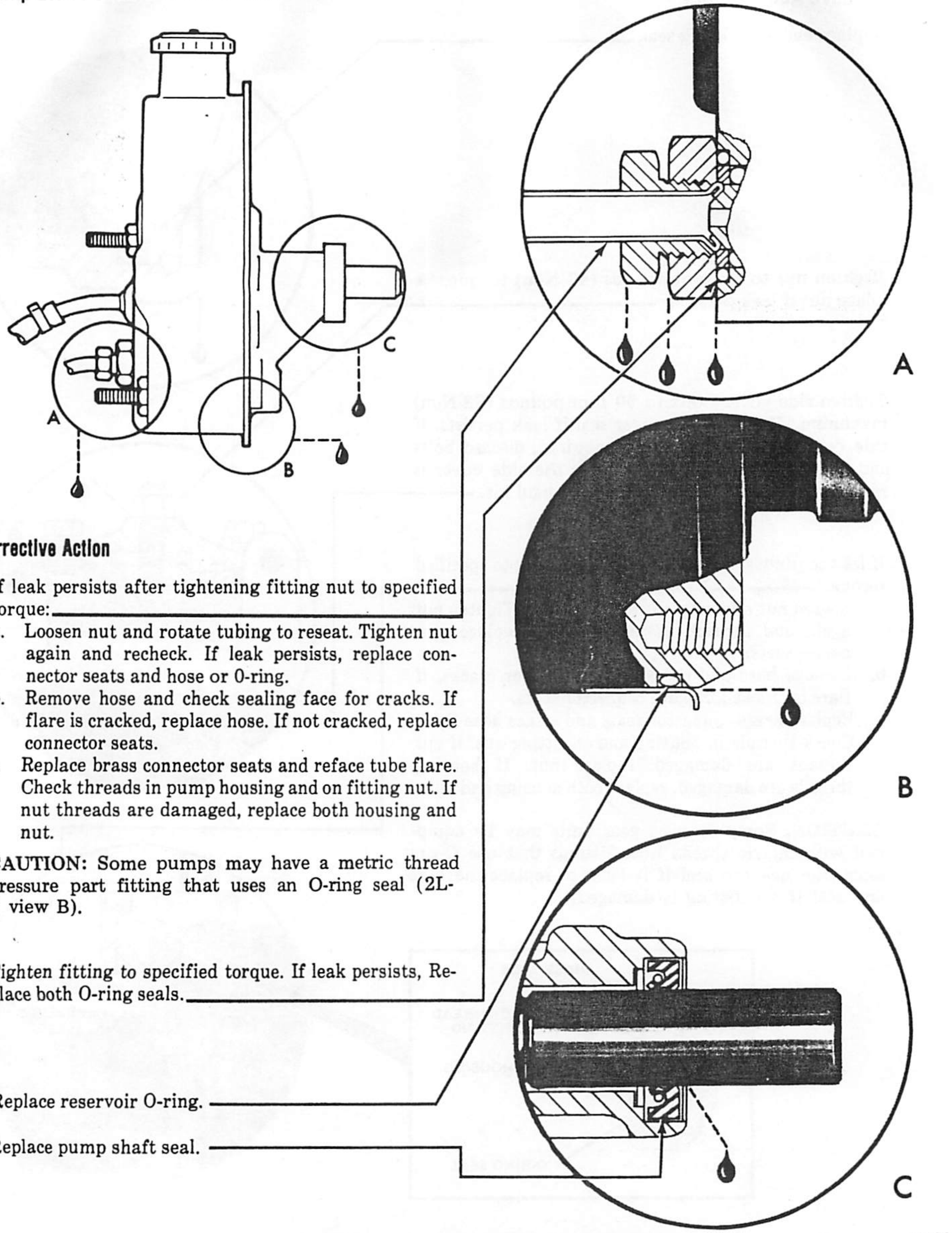

Corrective Action

If leak persists after tightening fitting nut to specified torque:

a. Loosen nut and rotate tubing to reseat. Tighten nut again and recheck. If leak persists, replace connector seats and hose or O-ring.

b. Remove hose and check sealing face for cracks. If flare is cracked, replace hose. If not cracked, replace connector seats.

c. Replace brass connector seats and reface tube flare. Check threads in pump housing and on fitting nut. If nut threads are damaged, replace both housing and nut.

CAUTION: Some pumps may have a metric thread pressure part fitting that uses an O-ring seal (2L-7 view B).

Tighten fitting to specified torque. If leak persists, Replace both O-ring seals.

Replace reservoir O-ring.

Replace pump shaft seal.

Fig. 2L-8 Power Steering Pump Leak Diagnosis and Corrective Action

(6) If fluid is aerated, check for overfill condition, or air entering fluid through loose hose connection or reservoir O-ring seal, or perform hydraulic pressure test to check for sticking flow control valve.

(7) If leak occurs from cracked or porous pump body or reservoir, replace pump as assembly.

HYDRAULIC PRESSURE TEST

The hydraulic pressure test is performed using Test Gauge J-21567. The fittings on the test gauge and gauge valve have 1/4 pipe threads. Any combination of fittings is acceptable for gauge installation and connection can be made at the pump or gear as desired. However, the gauge must be connected in the pressure line circuit between pump and test gauge valve at all times.

CAUTION: *Some steering gear and pump units have metric thread fittings and hose fittings which use an O-ring seal (fig. 2L-7, View B). In order to use gauge J-21567, hose fitting adapters J-5176-50, must be installed on the existing gauge hoses before using the test gauge.*

Test Procedure

(1) Check condition of power steering fluid. Drain and replace fluid if it contains small amount of dirt or contaminant. If fluid is exceptionally dirty, contaminated, or full of debris or foreign material, gear and pump should be disassembled and serviced.

(2) If fluid is full of bubbles, bleed power steering system. Refer to Fluid Level and Initial Operation in Power Steering Pump section.

(3) Check and adjust pump drive belt tension, if necessary.

(4) Position drip pan under pump.

(5) Disconnect pressure hose at pump. Keep hose end raised to avoid excessive fluid loss.

(6) Connect pressure hose to Test Gauge J-21567. Refer to Pump Diagnosis Charts. Install hose fitting adapters J-5176-50 if gear and pump have metric thread fittings.

(7) Connect test gauge hose to pump. Refer to Pump Diagnosis Charts.

(8) Open test gauge valve completely. Turn valve counterclockwise to open.

(9) Fill pump reservoir with power steering fluid.

(10) Shift transmission into neutral, apply parking brakes, start engine, and operate engine until power steering fluid reaches normal operating temperature.

(11) Record pump initial output pressure registered on test gauge. Pressure should be 80 to 125 psi (552 to 862 kPa) with gauge valve open completely.

NOTE: *If the initial output pressure exceeds 200 psi (1 379 kPa), stop the engine and check the test gauge and pressure hoses for restrictions.*

(12) Check pump maximum output pressure as follows: Close gauge valve completely for 2 to 3 seconds; then open valve completely. Perform this procedure three times in succession and record highest pressure developed each time valve is closed.

CAUTION: *Do not hold the gauge valve closed for more than five seconds at a time as pump damage could occur.*

(13) On CJ and Scrambler models, maximum pump output pressures should be in 1000 to 1100 psi (6 895 to 7 584 kPa) range and not vary by more than 50 psi (345 kPa). On all other models, pressures should be in 1400 to 1500 psi (9 653 to 10 342 kPa) range and also not vary by more than 50 psi (345 kPa).

For example if recorded pressures on CJ and Scrambler models were 1050-1060-1070 psi (7 240-7 309-7 378 kPa), or 1450-1480-1470 psi (9 998-10 205-10 136 kPa) on Cherokee, Wagoneer and Truck models, maximum pressures are within allowable variance and pump operation is within limits.

(14) If maximum pressures were within specified high ranges but varied by more than 50 psi (345 kPa), flow control valve is sticking. Remove and clean valve and remove any surface imperfections with crocus cloth.

(15) If pump flow control valve was serviced, repeat pressure test to check valve operation before proceeding.

(16) Turn steering wheel right and left. Contact steering stops in both directions and record highest pressure developed when each stop is contacted. If pressures are 1000 to 1100 psi (6 895 to 7 584 kPa) on CJ and Scrambler models, or 1400 to 1500 psi (9 653 to 10 342 kPa) on all other models, pump is operating properly.

CAUTION: *Do not hold the steering wheel against the steering stops for more than five seconds at a time as pump damage could occur.*

(17) If pump maximum output pressure cannot be duplicated at each steering stop, steering gear is leaking internally and must be disassembled and serviced.

(18) If pump output pressures were duplicated at each steering stop, proceed to next step.

(19) Stop engine and remove test gauge.

(20) Connect pressure hose to pump. Tighten hose fitting to 30 foot-pounds (41 N•m) torque.

(21) Check and adjust power steering fluid level as necessary.

(22) Remove drain pan.

PERIODIC MAINTENANCE

Power steering fluid level and condition should be checked periodically as outlined in the Maintenance Schedule. A dipstick attached to the pump reservoir cap is used to check fluid level.

Fluid level can be checked when cold or at operating temperature. At operating temperature, the fluid level should be at the FULL HOT mark on the dipstick. When cold it should be at the FULL COLD mark. If the fluid level is low, add fluid as necessary and check for leaks. If the reservoir is overfilled, drain fluid to correct level.

When adding fluid to or refilling the reservoir after service operations, use Jeep Power Steering Fluid, or equivalent only. Use power steering fluid or fluid designated for use in power steering systems only. Do not use transmission fluid, motor oil, or similar fluids.

The pump drive belt tension and condition should be also be checked periodically. Use Tension Gauge J-23600 to measure belt tension. When checking tension with this gauge, position the gauge at the center of the longest belt span to take readings. When checking tension of notched drive belts, be sure the gauge finger is firmly seated in a belt notch before taking readings.

POWER STEERING SYSTEM HYDRAULIC PRESSURE TEST PROCEDURE

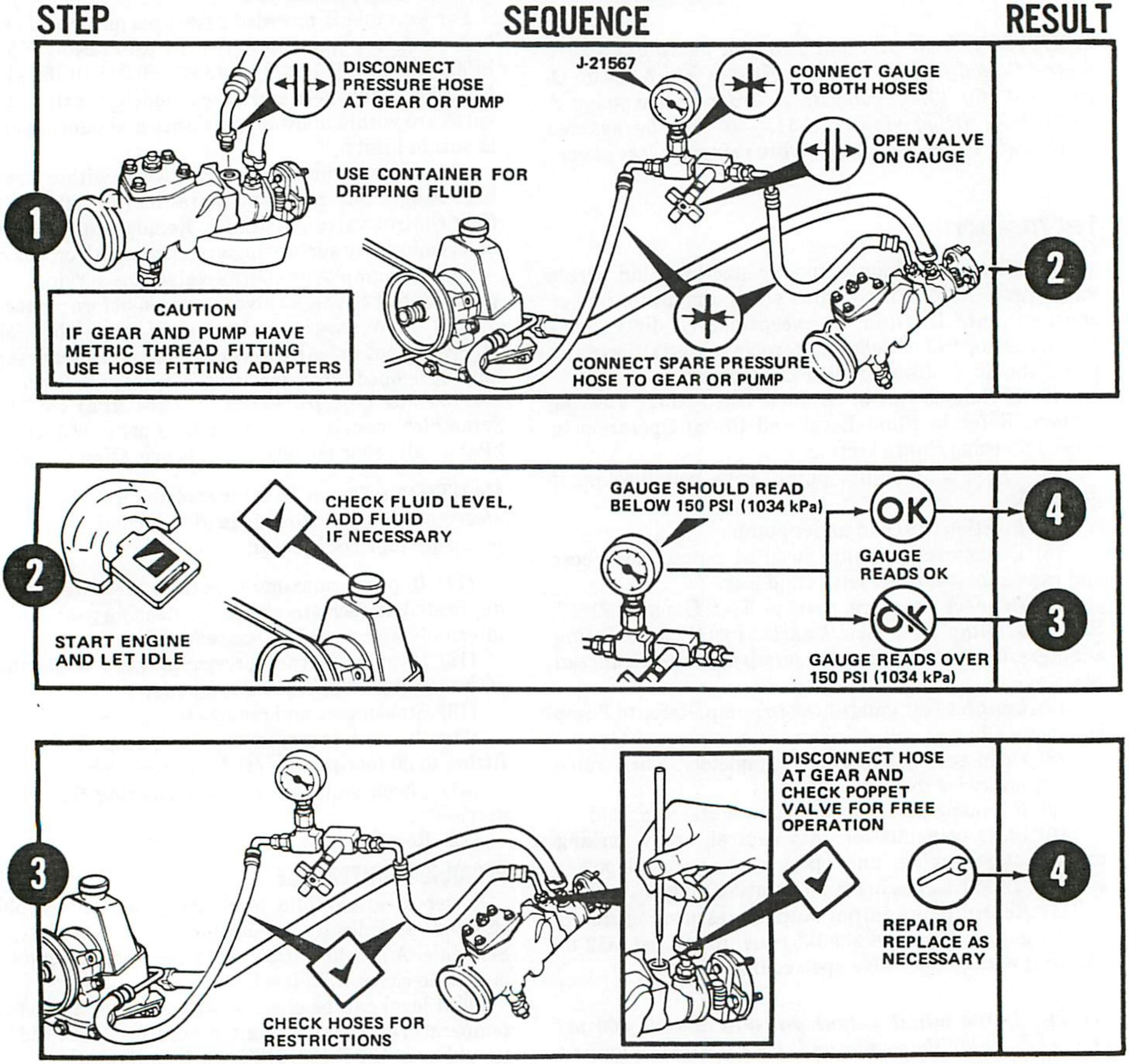

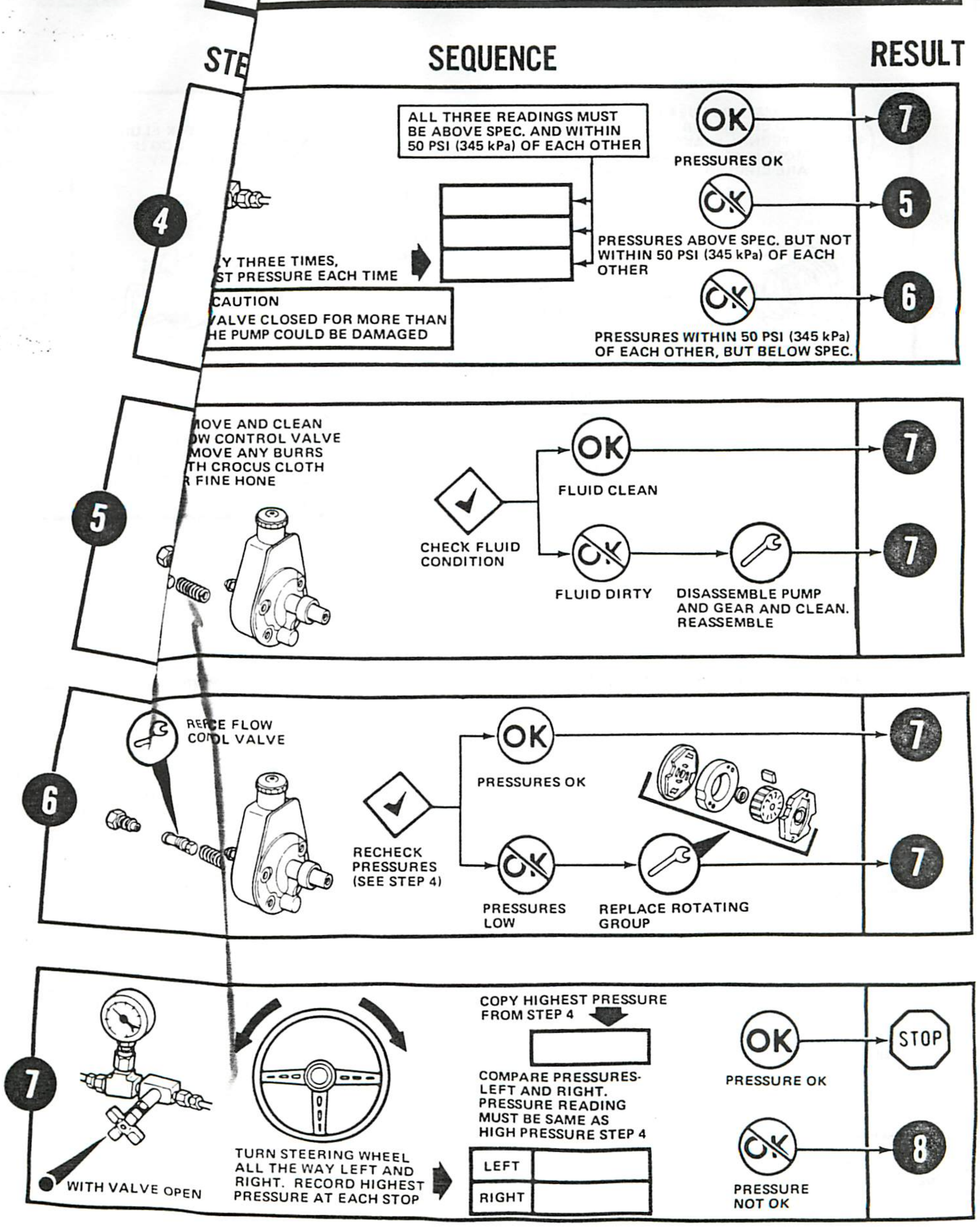

STE | SEQUENCE | RESULT

4

Y THREE TIMES,
ST PRESSURE EACH TIME

ALL THREE READINGS MUST BE ABOVE SPEC. AND WITHIN 50 PSI (345 kPa) OF EACH OTHER

CAUTION
ALVE CLOSED FOR MORE THAN
HE PUMP COULD BE DAMAGED

- OK — PRESSURES OK → 7
- Not OK — PRESSURES ABOVE SPEC. BUT NOT WITHIN 50 PSI (345 kPa) OF EACH OTHER → 5
- Not OK — PRESSURES WITHIN 50 PSI (345 kPa) OF EACH OTHER, BUT BELOW SPEC. → 6

5

IOVE AND CLEAN
W CONTROL VALVE
MOVE ANY BURRS
TH CROCUS CLOTH
FINE HONE

CHECK FLUID CONDITION

- OK — FLUID CLEAN → 7
- Not OK — FLUID DIRTY — DISASSEMBLE PUMP AND GEAR AND CLEAN. REASSEMBLE → 7

6

RE CE FLOW
CO L VALVE

RECHECK PRESSURES (SEE STEP 4)

- OK — PRESSURES OK → 7
- Not OK — PRESSURES LOW — REPLACE ROTATING GROUP → 7

7

WITH VALVE OPEN

TURN STEERING WHEEL ALL THE WAY LEFT AND RIGHT. RECORD HIGHEST PRESSURE AT EACH STOP

COPY HIGHEST PRESSURE FROM STEP 4

COMPARE PRESSURES-LEFT AND RIGHT. PRESSURE READING MUST BE SAME AS HIGH PRESSURE STEP 4

LEFT	
RIGHT	

- OK — PRESSURE OK → STOP
- Not OK — PRESSURE NOT OK → 8

80084B

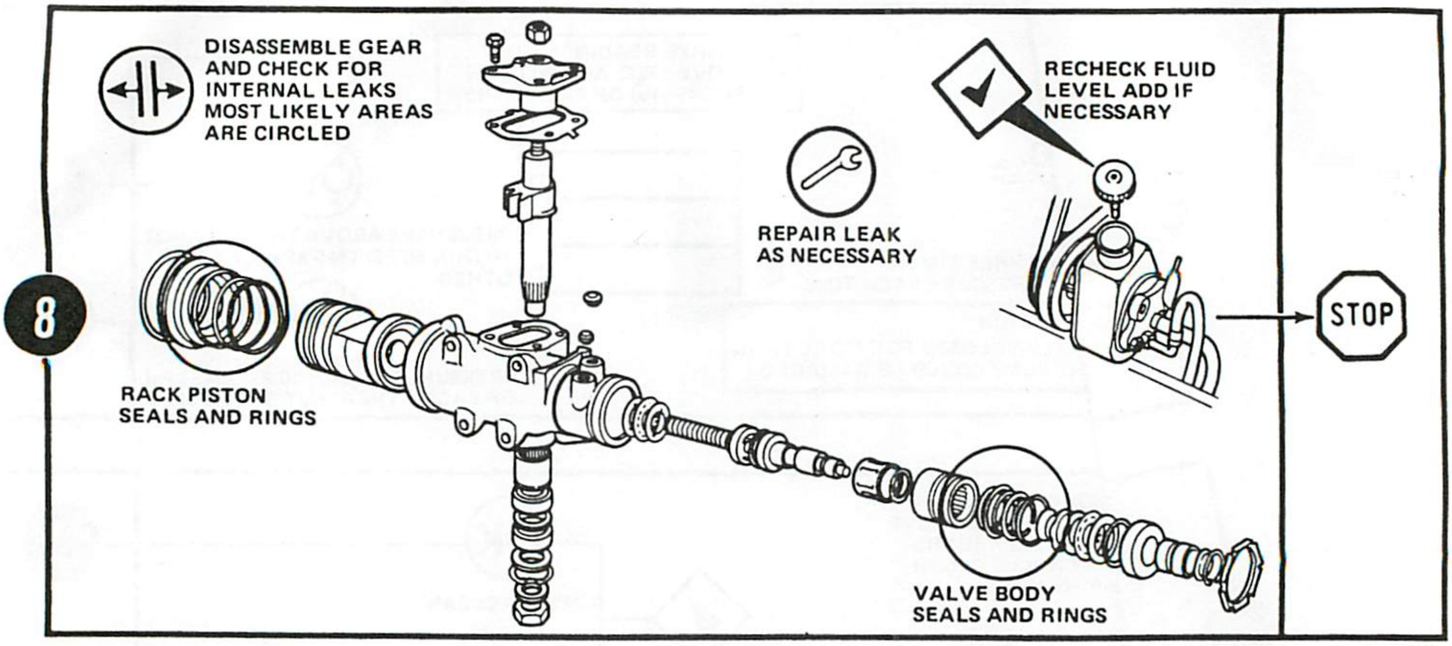

80084C

SPECIFICATIONS

Power Steering Gear Specifications

Type	Recirculating Ball, worm and nut.
Bearings	
Wormshaft Upper	Needle Roller
Lower	Needle Roller
Pitman Shaft	Needle Roller
Fluids	Use Jeep Power Steering Fluid or equivalent only. Do not use transmission fluid.
Power Steering System Fluid Capacity	1-1/4 pints (0.59 liters)
Steering Gear Adjustment:	
Worm Bearing Preload	4 to 10 inch-pounds (0.45 to 1.13 N·m) rotating torque. Refer to Steering Gear Adjustment.
Pitman Shaft Overcenter Drag Torque	
(New gear with less than 400 miles service)	4 to 8 inch-pounds (0.45 to 0.90 N·m) in addition to worm bearing preload but not to exceed total of 14 inch-pounds (1.58 N·m)
(Used gear with over 400 miles service)	4 to 5 inch-pounds (0.45 to 0.56 N·m) in addition to worm bearing preload but not to exceed total of 18 inch-pounds (2.03 N·m)
Steering Ratio	
CJ	17.5:1 constant ratio
Cke-Wag-Trk	13/16:1 variable ratio
Valve Body	Three-way, open center, rotary-type.

80499

Power Steering Pump Specifications

Pump Type	Vane-type, constant displacement, belt-driven hydraulic pump.
Capacity at 465 RPM	1.25 GPM
Flow Range	1.25 to 2.15 GPM
Relief Valve Setting (Maximum Pressure):	
CJ	1100-1200 psi (7584-8274 kPa)
Cke-Wag-Trk	1400-1500 psi (9653-10342 kPa)
Pressure Test Specifications:	
Initial pressure (engine at idle speed)	80-125 psi (552-862 kPa)
Test pressures (gauge valve closed)	Pressures must be within maximum pressure specifications and not vary by more than 50 psi (345 kPa)
Turning	400 psi (2758 kPa)
Fluids	Use Jeep Power Steering Fluid or equivalent only. Do not use transmission fluid. Use fluids designed for power steering system use only.

80502

Drive Belt Tension Specifications

	USA (pounds)		Metric (N)	
	New Belt*	Used Belt	New Belt*	Used Belt
Air Conditioner, Six-Cylinder	125-155	90-115	556-689	400-512
Air Conditioner, Eight-Cylinder	125-155	90-115	556-689	400-512
Air Pump (All except Six-Cylinder w/AC)	125-155	90-115	556-689	400-512
Air Pump Six-Cylinder w/AC (3/8 inch belt)	65-75	60-70	291-334	267-311
Fan	125-155	90-115	556-689	400-512
Idler Pulley	125-155	90-115	556-689	400-512
Power Steering Pump (49-State)	125-155	90-115	556-589	400-512
Power Steering Pump (California)	180-200	140-160	800-890	623-712

*New belt specifications apply only to replacement belts. Once a belt has been tensioned and run, it is considered a used belt and should be adjusted to used belt specifications.

80503

POWER STEERING GEAR

GENERAL

Although service and adjustment procedures for constant and variable ratio steering gears are the same, do not attempt to interchange gear internal components.

When servicing a gear, perform all repair operations on a clean work surface only. Small amounts of foreign material or contaminants can cause a malfunction after assembly. Clean all parts in clean-filtered solvent only and dry all parts, except bearings, using filtered compressed air. Use lint-free paper towels or cloths only to dry bearings.

During assembly operations, use the recommended torque values and adjustment specifications only. Failure to adhere to these specifications can result in accelerated wear and unsatisfactory gear operation.

IN-VEHICLE SERVICE

Steering Gear Adjustment

Because of the close tolerance involved in adjusting worm bearing preload and pitman shaft overcenter drag torque plus the friction effect of hydraulic fluid, the steering gear must be adjusted off the vehicle only. Refer to Worm Bearing Preload and Pitman Shaft Overcenter Drag Torque Adjustment under Steering Gear Assembly and Adjustment.

CAUTION: *Do not attempt on-vehicle adjustment of the power steering gear. Incorrect adjustment could result in accelerated wear of gear internal components and undesirable steering response.*

Conditions such as shimmy and hard or loose steering may be caused by wheels and tires or worn or damaged front suspension components. These items should be checked before attempting power steering gear repairs.

Before performing any service operations, check and correct fluid level and condition, belt adjustment, and pump pressures.

CAUTION: *Use power steering fluid only in the system.*

Pitman Shaft Seal Replacement

(1) Raise vehicle.

(2) Disconnect pitman arm using Tool J-6632 (fig. 2L-9).

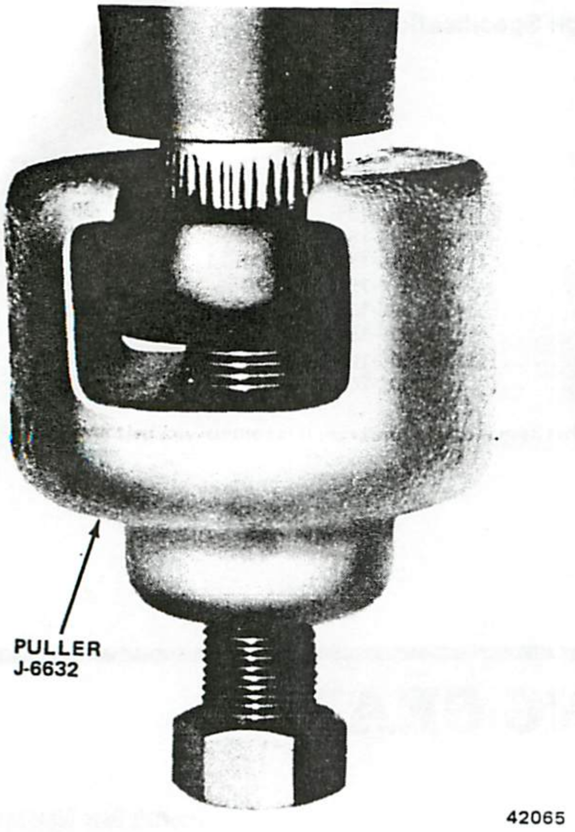

Fig. 2L-9 Pitman Arm Removal

(3) Position drain pan under gear.

(4) Remove seal retaining ring using tool J-4245 and remove outer seal backup washer.

(5) Start engine and momentarily hold steering wheel in full left turn position to actuate spool valve. This builds pressure on upper end of piston and in pitman shaft chamber to force seals and backup washers out of gear.

CAUTION: *To avoid excessive fluid loss and possible pump damage, do not hold the gear in the full left turn position for more than one or two seconds at a time.*

(6) Stop engine and remove seals and backup washers from pitman shaft.

(7) Inspect outer diameter of seals for damage. If scored or cut, inspect housing bore for burrs and nicks. Remove any burrs or nicks, before installing replacement seals, using crocus cloth.

(8) Inspect pitman shaft surface for roughness, pitting, scoring, rust, or nicks. Clean dirt, rust or corrosion from shaft seal surfaces using crocus cloth. Replace shaft if pitted or severely corroded.

(9) Lubricate replacement seals and shaft surfaces with power steering fluid.

(10) Apply single layer of thin tape to pitman shaft splines to avoid cutting seals.

(11) Insert single lip seal in bore first; then insert backup washer (fig. 2L-10).

(12) Seat single lip seal and washer using Snap Ring Tool J-21553. Install seal and washer only far enough to provide clearance for remaining seal, backup washer, retaining ring, and for clearance between seals. Do not allow seal to bottom in housing bore.

CAUTION: *To ensure proper seal action, be sure to allow enough space for clearance between the two seals.*

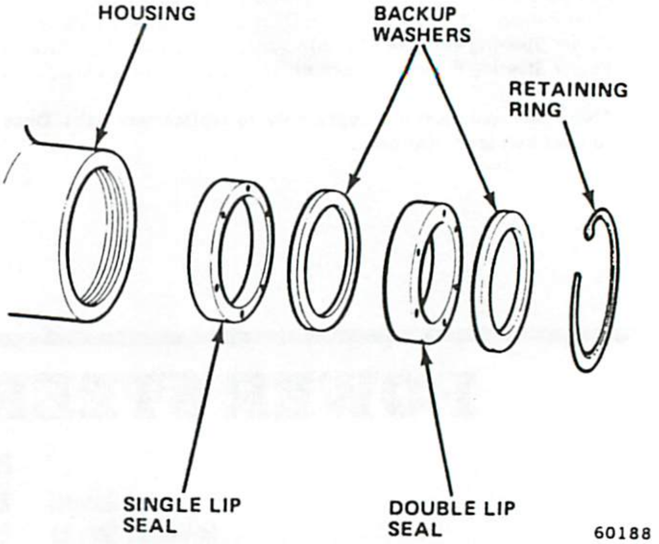

Fig. 2L-10 Pitman Shaft Seals and Backup Washers

(13) Install double lip seal and backup washer in housing bore using Tool J-21553. Install seal only far enough into bore to allow clearance for retaining ring.

(14) Install retaining ring using Snap Ring Tool J-4245. Be sure ring is fully seated.

(15) Install pitman arm on shaft and install replacement pitman arm nut and lockwasher. Tighten nut to 185 foot-pounds (251 N•m) torque. Stake nut in two places to retain it.

(16) Lower vehicle.

(17) Fill power steering pump reservoir to correct level with power steering fluid.

(18) Start and idle engine for at least three minutes. Do not turn steering wheel during this time.

(19) Turn steering wheel left and right and check for leaks. Add additional fluid as necessary.

End Plug O-Ring Seal Replacement

CJ and Scrambler Models

(1) Raise vehicle.

(2) Rotate end plug retaining ring (fig. 2L-11) until one end of ring is positioned over hole in side of housing.

(3) Remove retaining ring by inserting punch through hole in housing and unseating ring.

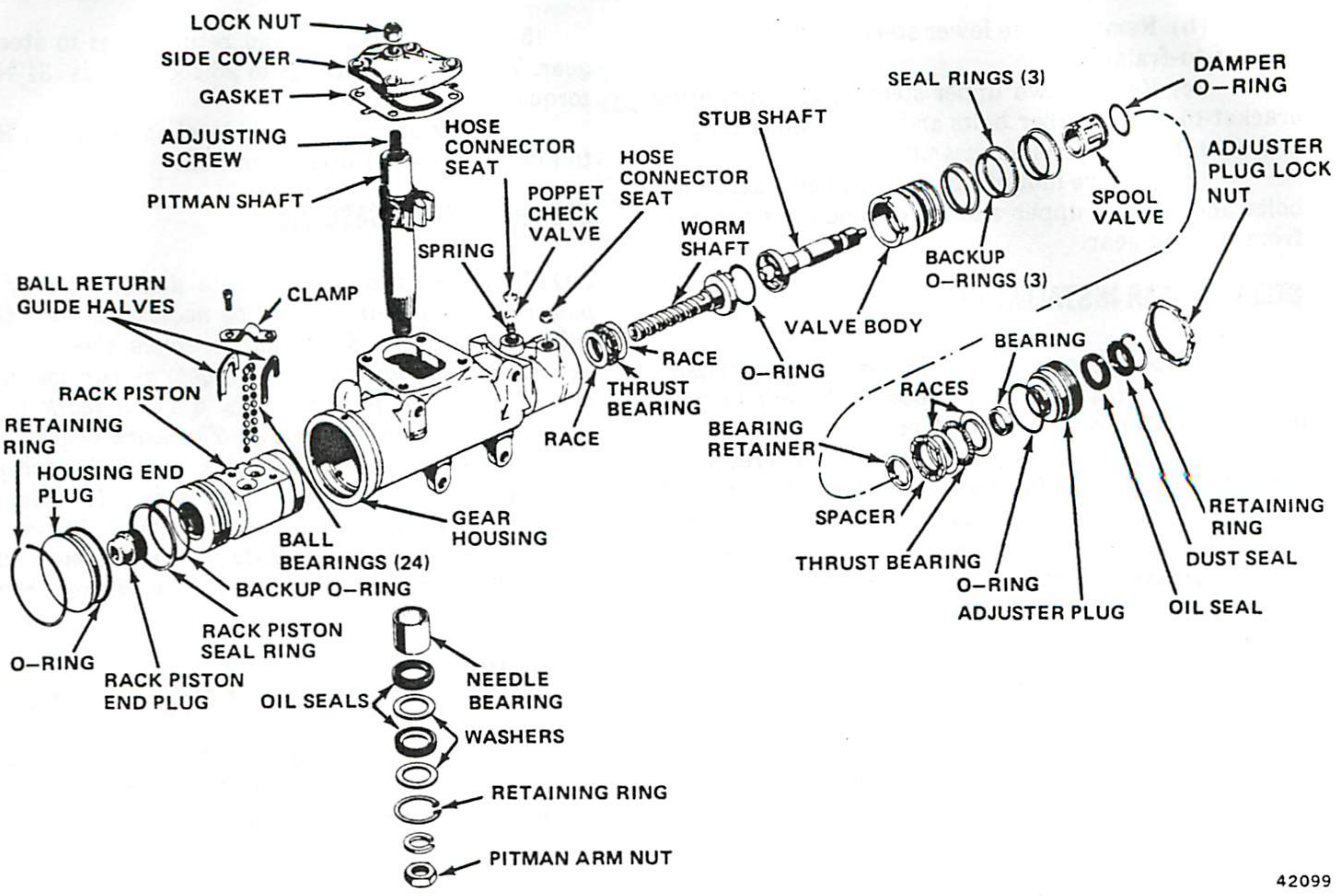

Fig. 2L-11 Power Steering Gear Assembly

(4) Remove end plug by turning steering wheel slowly to left until rack piston forces end plug out of housing.

(5) Turn steering wheel back to center position.

CAUTION: *Do not turn the steering wheel any farther than necessary or the ball bearings in the rack piston may fall out of the rack piston bearing circuit and drop into the piston chamber.*

(6) Remove and discard end plug O-ring seal.

(7) Lubricate replacement seal with power steering fluid and install seal on end plug.

(8) Install assembled end plug and seal in housing.

(9) Install retaining ring.

(10) Lower vehicle.

(11) Check and correct power steering fluid level as necessary.

Cherokee-Wagoneer-Truck Models

On Cherokee, Wagoneer and Truck models, the position of the steering gear prevents on-vehicle replacement of the end plug O-ring seal (fig. 2L-11). It is necessary to remove the gear to perform seal replacement.

STEERING GEAR REMOVAL

(1) Disconnect pressure and return hoses at gear. Keep hoses raised to avoid excessive fluid loss and cap hoses to prevent dirt entry.

(2) On Cherokee, Wagoneer and Truck models, remove clamp bolt and nut attaching flexible coupling to steering gear stub shaft and disengage coupling from stub shaft.

(3) On CJ and Scrambler models, remove clamp bolt and nut attaching intermediate shaft coupling to steering gear stub shaft and disconnect intermediate shaft.

(4) Paint alignment marks on pitman shaft and pitman arm for assembly reference.

(5) Remove and discard pitman arm nut and lockwasher.

(6) Remove pitman arm using Tool J-6632 (fig. 2L-9).

(7) On Cherokee, Wagoneer and Truck models, remove steering gear-to-frame mounting bolts and remove gear.

(8) On CJ and Scrambler models, remove gear as follows:

(a) Raise left side of vehicle slightly to relieve tension on left front spring and place support stand under frame.

(b) Remove three lower steering gear mounting bracket-to-frame bolts.

(c) Remove two upper steering gear mounting bracket-to-crossmember bolts and remove steering gear and mounting brackets as assembly.

(d) Remove mounting bracket-to-gear attaching bolts and remove upper and lower mounting brackets from steering gear.

STEERING GEAR INSTALLATION

NOTE: *Proper retention of the steering gear is important. Some of the following procedural steps in gear installation require the application of Loctite or equivalent material to attaching bolt threads. Wherever indicated, use Jeep Adhesive Sealant or Loctite 271 Adhesive/Sealant, or equivalent. When applying this material, clean all bolt threads thoroughly to remove dirt and grease and apply the material liberally to the bolt threads no more than five minutes before installation.*

(1) On Cherokee, Wagoneer and Truck models, install gear as follows:

(a) Align and install flexible coupling on steering gear stub shaft and install clamp bolt. Tighten clamp bolt to 30 foot-pounds (41 N•m) torque.

(b) Apply Loctite or equivalent material to steering gear-to-frame mounting bolts.

(c) Position steering gear on frame and install gear mounting bolts. Tighten mounting bolts to 70 foot-pounds (95 N•m) torque.

(2) On CJ and Scrambler models, install gear as follows:

(a) Apply Loctite or equivalent material to all steering gear mounting bracket attaching bolts.

(b) Position upper and lower mounting brackets on steering gear and install bracket attaching bolts. Tighten bolts to 70 foot-pounds (95 N•m) torque.

(c) Apply Loctite or equivalent material to steering gear mounting bracket-to-frame and crossmember attaching bolts.

(d) Align and connect intermediate shaft coupling to steering gear stub shaft.

(e) Position assembled steering gear and mounting brackets on frame and crossmember and install attaching bolts. Tighten all attaching bolts to 55 foot-pounds (75 N•m) torque.

(f) Remove support stands and lower vehicle.

(g) Install intermediate shaft coupling-to-steering gear stub shaft clamp bolt and nut. Tighten nut to 45 foot-pounds (61 N•m) torque.

(3) On all models, align and install pitman arm on pitman shaft using reference marks made during removal.

(4) Install replacement pitman shaft lockwasher and nut. Tighten nut to 185 foot-pounds (251 N•m) torque and stake nut in two places to retain it.

(5) Connect pressure and return hoses to steering gear. Tighten hose fittings to 25 foot-pounds (34 N•m) torque.

(6) Check and adjust fluid level as necessary. Refer to Fluid Level and Initial Operation.

STEERING GEAR DISASSEMBLY

NOTE: *In most cases, complete disassembly of the power steering gear will not be necessary. Only those subassemblies that have malfunctioned should be disassembled. In addition, steering gear repair operations must always be performed on a clean work bench. Cleanliness is very important. The work bench, tools, and steering gear component parts must be kept clean at all times to avoid problems after assembly. Clean the gear exterior thoroughly with solvent before disassembly. Refer to figure 2L-11 for parts nomenclature and disassembly/assembly sequence during service operations.*

(1) Drain fluid from gear.

(2) Cap all openings in gear and clean gear exterior thoroughly.

(3) Mount steering gear in vise so pitman shaft points downward. Clamp unmachined housing boss portion of gear in vise only (fig. 2L-12).

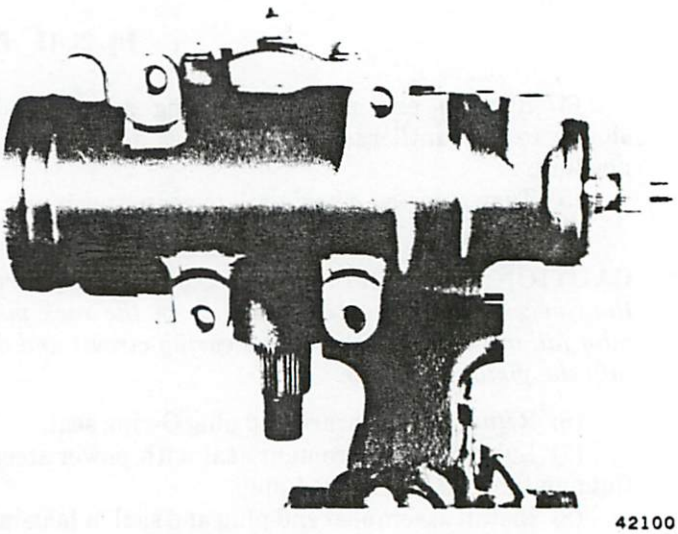

Fig. 2L-12 Mounting Steering Gear in Vise

(4) Rotate end plug retaining ring until one end of ring is aligned with hole in side of housing. Unseat ring using punch inserted through hole in housing and remove ring using screwdriver (fig. 2L-13).

(5) Remove end plug. Install 12-point deep socket and ratchet handle on stub shaft and slowly rotate shaft counterclockwise until rack piston forces end plug out of housing.

Fig. 2L-13 End Plug Retaining Ring Removal

CAUTION: *Do not rotate the stub shaft any farther than necessary or the ball bearings will drop out of the rack piston circuits. This causes the rack piston and pitman shaft sector teeth to disengage preventing removal. If disengagement should occur, remove the side cover and pitman shaft and reengage the teeth.*

(6) Remove and discard O-ring seal from housing end plug.

(7) Turn stub shaft 1/2 turn clockwise.

(8) Unseat rack piston end plug by tapping it with plastic mallet.

(9) Remove rack piston end plug.

CAUTION: *Do not attempt to remove the rack piston end plug until it has been unseated as the plug could break.*

(10) Remove and discard pitman shaft adjuster screw locknut. Use Allen wrench to prevent adjuster screw from turning when removing locknut (fig. 2L-14).

NOTE: *The locknut has left-hand threads.*

(11) Remove side cover bolts and lockwashers.

(12) Remove side cover. Unthread cover from adjuster screw by turning screw clockwise.

(13) Rotate stub shaft until pitman shaft sector teeth are centered in housing.

(14) Remove pitman shaft from housing by tapping threaded end of shaft with plastic mallet.

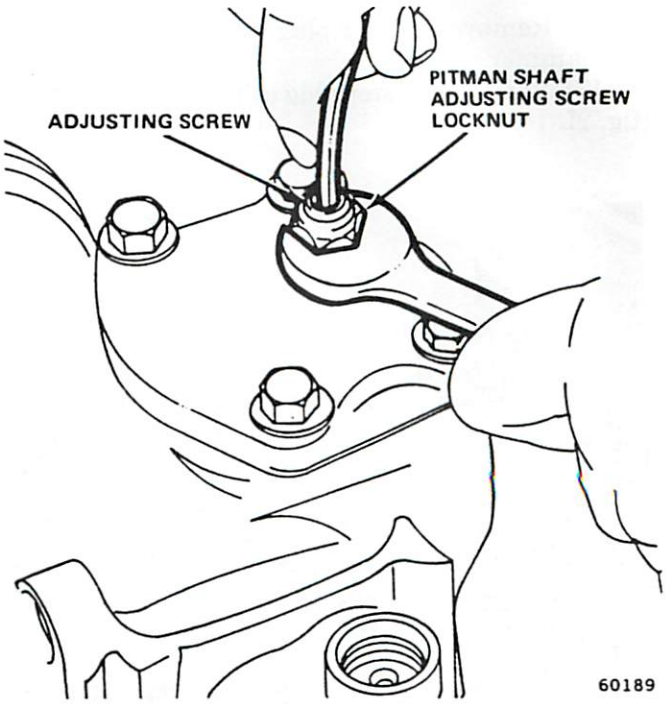

Fig. 2L-14 Adjuster Screw Locknut Removal/Installation

NOTE: *Do not remove or disassemble any of the pitman shaft component parts. The shaft and component parts are serviced as an assembly only.*

(15) Remove rack piston from housing as follows:

(a) Insert Arbor Tool J-7539-01 or J-21552 into rack piston until tool contacts end of wormshaft.

(b) Hold arbor tool tightly against wormshaft and turn stub shaft counterclockwise to force rack piston onto arbor tool.

(c) Remove rack piston and arbor tool as assembly (fig. 2L-15).

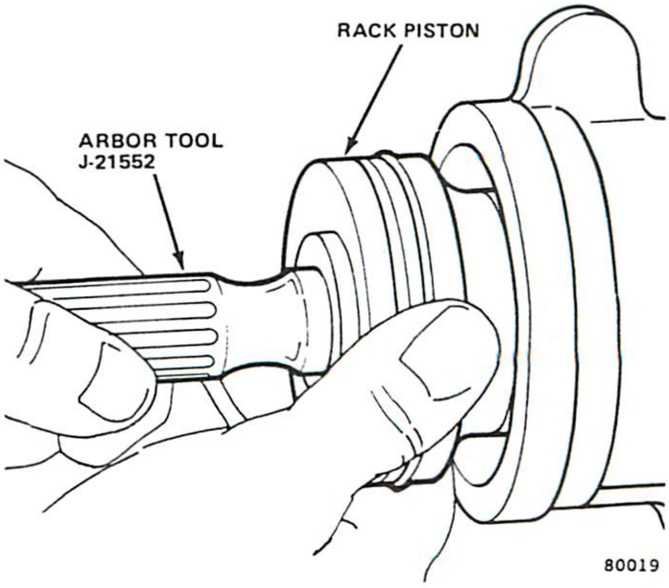

Fig. 2L-15 Rack Piston Removal/Installation

(16) Remove adjuster plug locknut using brass drift and hammer.

(17) Remove adjuster plug using Spanner Tool J-7624 (fig. 2L-16).

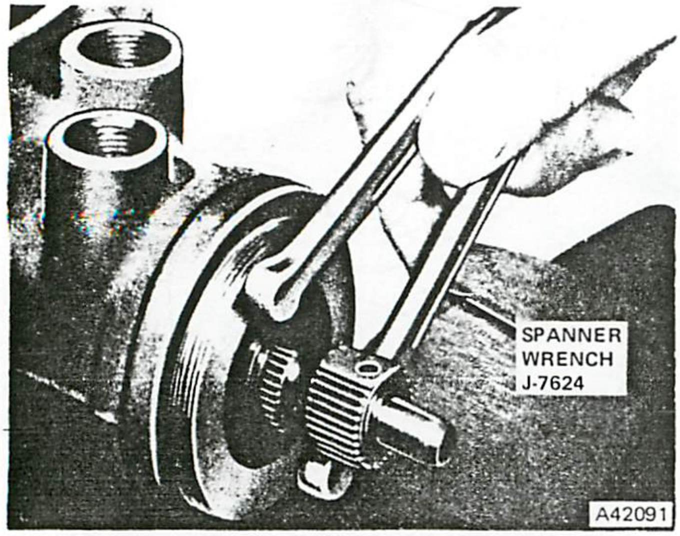

Fig. 2L-16 Adjuster Plug Removal

(18) Remove valve body from housing. Grasp stub shaft and pull outward to remove.

(19) Remove wormshaft lower thrust bearing and bearing races from housing if not removed previously.

STEERING GEAR SUBASSEMBLY OVERHAUL

Gear Housing

Disassembly

(1) Remove pitman shaft seal retaining ring using Snap Ring Pliers J-4245.

(2) Remove steel washer (fig. 2L-17).

(3) Remove backup washer and double lip seal (fig.2L-17). Use screwdriver to pry seal out of bore. Discard seal.

(4) Remove backup washer and single lip seal (fig. 2L-17). Use screwdriver to pry seal out of bore. Discard seal. Do not damage seal bore when removing washers and seals.

(5) Remove and discard pitman shaft needle bearing using Tools J-8092 and J-21551 (fig. 2L-18).

NOTE: *When removing the bearing, drive the bearing out the end of the pitman shaft bore. Do not attempt to drive the bearing out through the housing.*

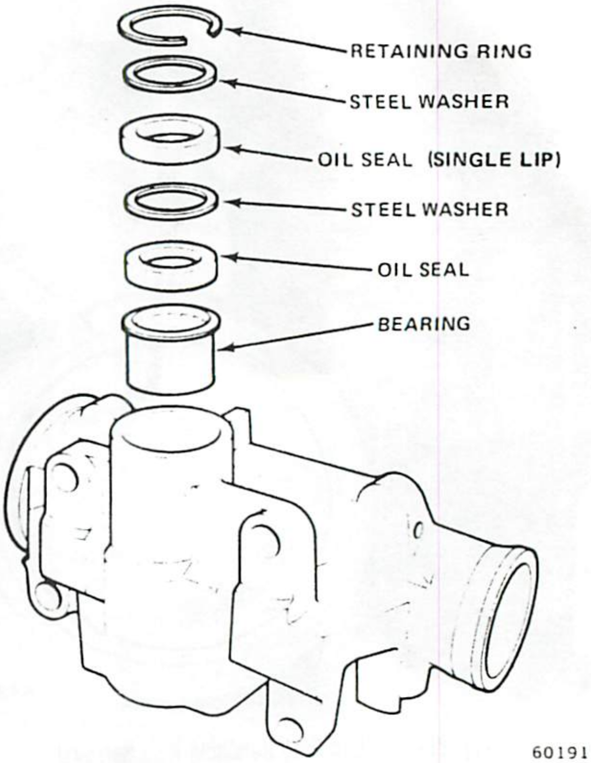

Fig. 2L-17 Pitman Shaft Bearing and Seals

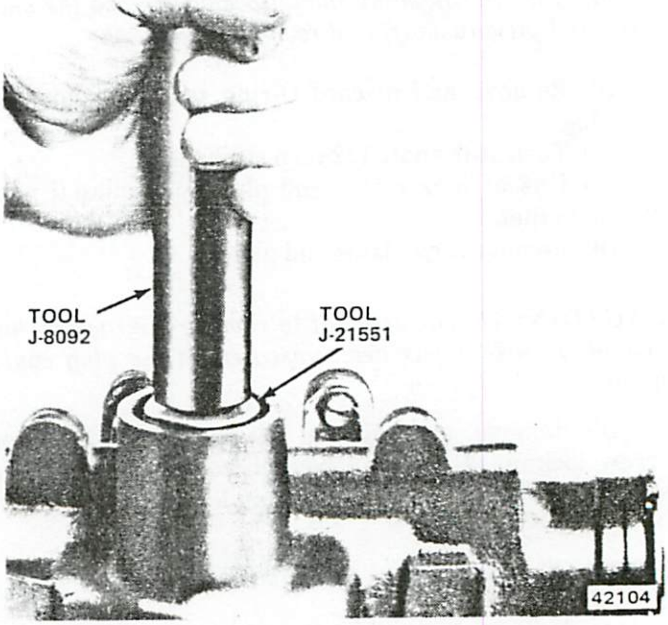

Fig. 2L-18 Pitman Shaft Bearing Removal/Installation

Cleaning and Inspection

Clean all components thoroughly with solvent and dry using compressed air or lint free paper towels or shop cloths.

Inspect the housing bore. Replace the housing if severely worn, scored, or pitted. However, slight scratches or minor corrosion can be removed using crocus cloth.

Inspect the pressure and return port hose connector seats, if equipped, and check the poppet check valve in the pressure port. Replace the seats if cracked, loose, cocked, worn, or scored. Replace the check valve if scored, chipped, cracked, or distorted. If seat or valve replacement is necessary, refer to Hose Connector Seat and Check Valve Replacement.

Inspect the housing ball plug (fig. 2L-19). Reseat the ball if fluid leaked past the ball before disassembly. Seat the ball using a blunt punch. Spray the ball area with Loctite Solvent 7559, or equivalent, and dry the area with compressed air. Cover the ball area and ball with Loctite Sealant 290. Allow the sealant to cure for approximately two hours before installing or assembling the gear.

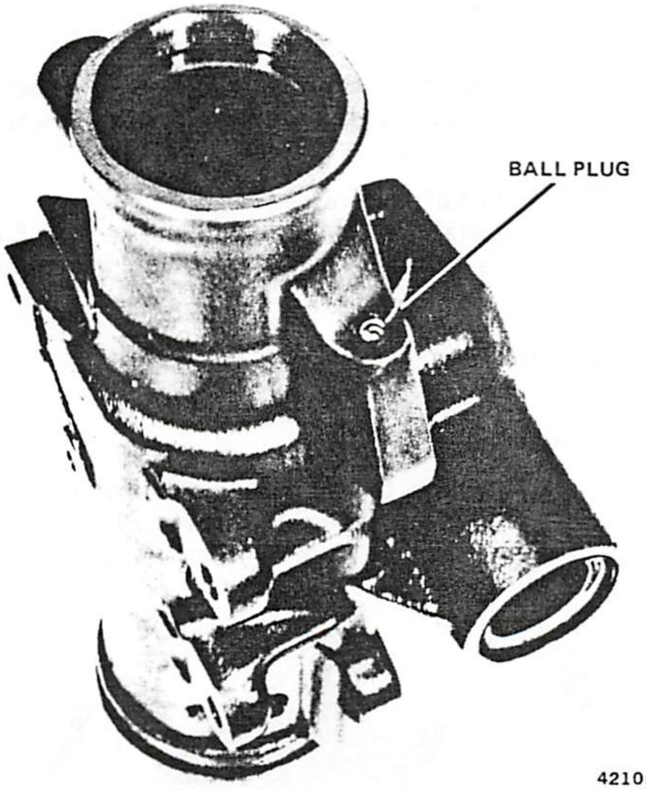

Fig. 2L-19 Housing Ball Plug Location

Inspect all retaining ring, bearing, and seal surfaces in the housing. Replace the housing if any surface is worn or damaged.

Hose Connector Seat and Check Valve Replacement

CAUTION: *Some steering gear units have metric thread fittings and hose fittings which use O-ring seals instead of connector seats (fig. 2L-7, View B).*

CAUTION: *If the gear has connector seats, do not attempt connector seat or check valve replacement unless the gear has been removed and disassembled. Connector seat replacement will generate metal chips and shavings which can enter the gear and cause a malfunction after assembly.*

(1) Pack seats and pressure ports with petroleum jelly to prevent chips from lodging in ports.

(2) Thread connector seats to depth of 2-3 threads (only) using 5/16-18 tap (fig. 2L-20).

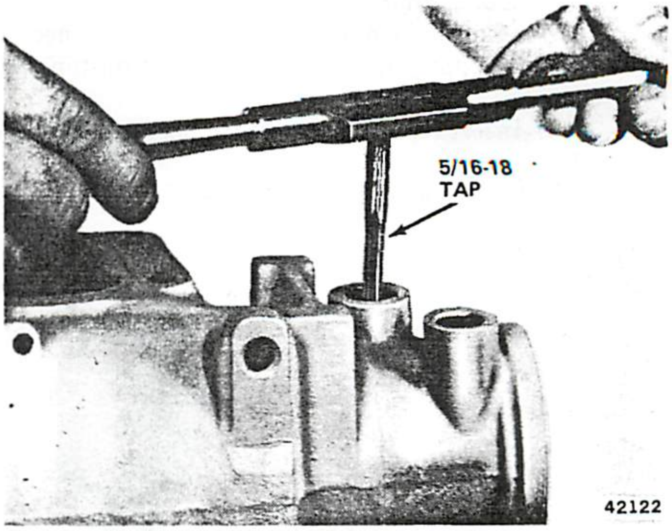

Fig. 2L-20 Threading Hose Connector Seats (Gears with Non-Metric Fittings Only)

CAUTION: *Do not thread the pressure port seat any more than 2-3 threads deep or the tap may contact the check valve and damage it.*

(3) Assemble 5/16-18 bolt, nut and flat washer and thread bolt into connector seat (fig. 2L-21).

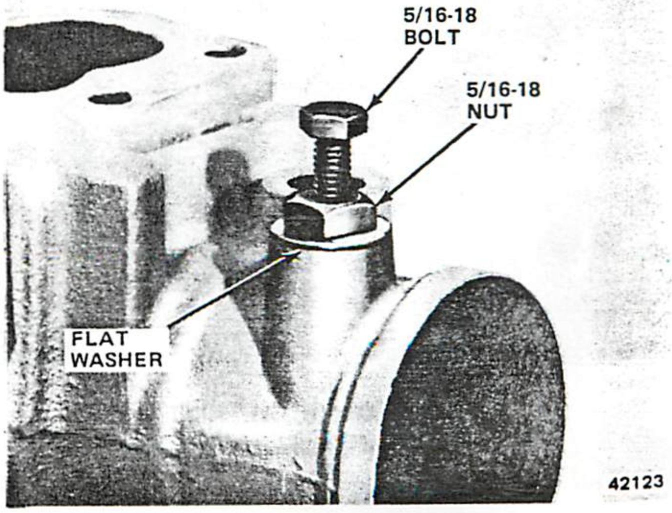

Fig. 2L-21 Hose Connector Seat Removal (Gears with Non-Metric Fittings Only)

(4) Place wrench on bolt to prevent it from turning and tighten nut against housing to remove seat.

(5) Remove check valve and spring from pressure port and discard both parts, they are not reuseable.

(6) Clean housing thoroughly to remove metal chips and shavings, dirt, and petroleum jelly.

(7) Install replacement check valve spring in pressure port. Be sure spring is seated in pressure port counterbore and large end of spring faces downward.

(8) Install replacement check valve over spring so valve tangs face downward. Be sure valve is centered on small end of spring.

(9) Coat replacement pressure port connector seat with petroleum jelly and position seat on top of check valve.

(10) Insert replacement return port connector seat in port.

(11) Install both seats using Tool J-6217 (fig. 2L-22).

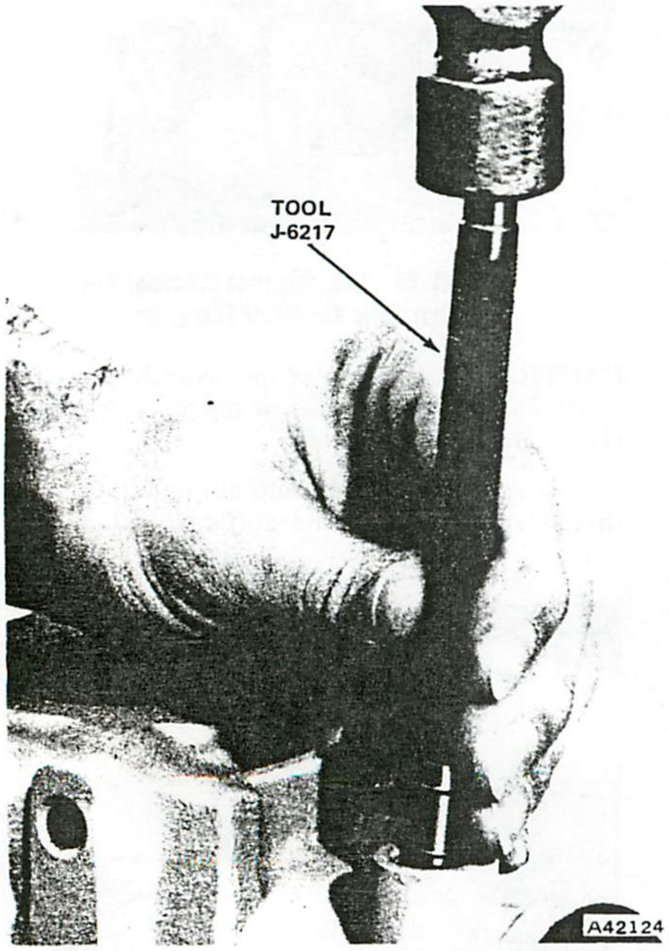

Fig. 2L-22 Hose Connector Seat Installation (Gears with Non-Metric Fittings Only)

(12) Inspect check valve operation by lightly pressing valve downward with pencil. Valve should reseat itself when pencil pressure is released.

(13) Clean housing with solvent to remove any remaining chips and petroleum jelly.

Assembly

(1) Lubricate housing bores and all replacement bearings and seals with power steering fluid.

(2) Install pitman shaft needle bearing using Tools J-8092 and J-21553 (fig. 2L-18). Install bearing until approximately 1/32 inch (0.79 mm) below shoulder in housing bore.

(3) Install single lip seal and backup washer (fig. 2L-17). Seat washer and seal using Tool J-21553. Install seal and washer only far enough to provide clearance for next seal and washer, steel washer and retaining ring, and to provide small clearance between seals.

CAUTION: *Do not bottom the seal against the housing counterbore.*

(4) Install double lip seal and backup washer using Tool J-21553. Install seal and washer only far enough to allow clearance for steel washer and retaining ring.

CAUTION: *To ensure proper seal action, do not allow the seals to contact one another. Be sure there is clearance between them.*

(5) Install steel washer.

(6) Install retaining ring using Snap Ring Pliers J-4245. Be sure ring is seated completely in housing ring groove.

Adjuster Plug

Disassembly

(1) Remove thrust bearing retainer using screwdriver (fig. 2L-23). Discard retainer. Do not damage needle bearing bore when removing retainer.

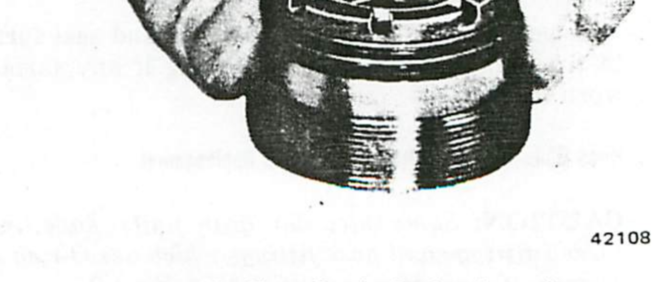

Fig. 2L-23 Thrust Bearing Retainer Removal

(2) Remove thrust bearing spacer, thrust bearing, and thrust bearing races (fig. 2L-24).

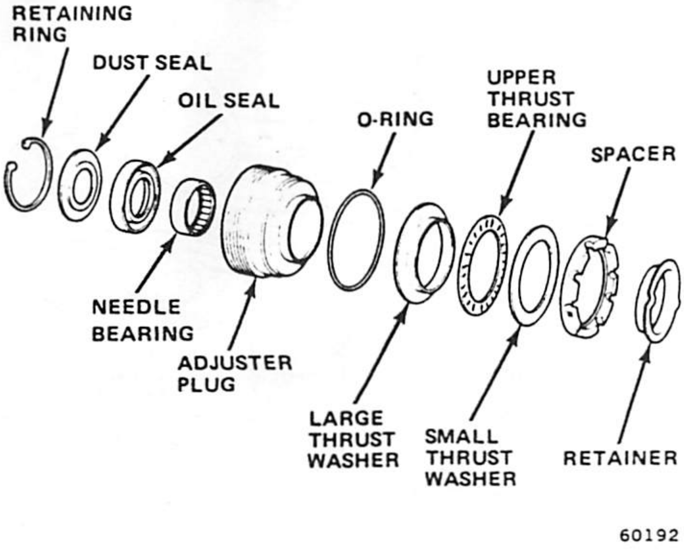

Fig. 2L-24 Adjuster Plug Components

(3) Remove and discard adjuster plug O-ring seal.

(4) Remove stub shaft seal retainer ring and remove and discard stub shaft dust seal. Use screwdriver to pry retainer and seal out of adjuster plug.

(5) Remove needle bearings using Tool J-6221 (fig. 2L-25). Discard bearings after removal.

Cleaning and Inspection

Clean the adjuster components with solvent and dry them using compressed air.

Inspect the adjuster plug bearing and seal surfaces for pitting, nicks, or scoring and inspect the plug threads for damage. Inspect the washers, spacer, and retainer for distortion, and wear. Replace any component that exhibits any of these conditions.

Assembly

(1) Lubricate dust seal and O-ring with petroleum jelly. Lubricate all other components with power steering fluid.

(2) Position needle bearing on Tool J-6221 so bearing manufacturers identification number is facing tool.

(3) Install bearing in adjuster plug until bearing is flush with bottom surface of stub shaft seal counterbore (fig. 2L-25).

(4) Install stub shaft seal in adjuster plug deep enough to provide clearance for dust seal and retaining ring.

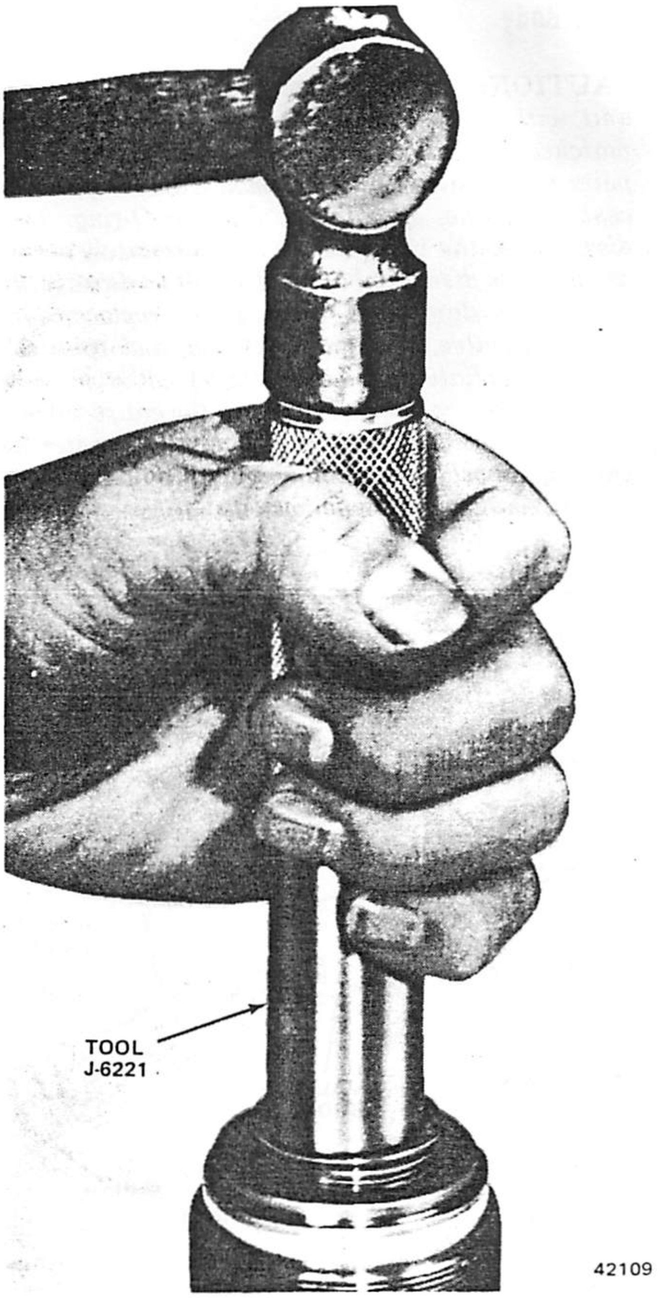

Fig. 2L-25 Adjuster Plug Needle Bearing Removal/Installation

(5) Install dust seal in adjuster plug. Rubber face of seal must face away from plug (outward).

(6) Install retaining ring using Snap Ring Pliers J-4245.

(7) Install O-ring in adjuster plug ring groove.

(8) Install large thrust washer, upper thrust bearing, small thrust washer, and spacer in adjuster plug.

(9) Install retainer. Use brass drift to press retainer into plug.

NOTE: *The radial location of the spacer notches are not important. However, do not damage the notches during retainer installation.*

Valve Body

CAUTION: *The valve body assembly is a precision unit with select fit components that are hydraulically matched and balanced during manufacture. Service repairs to the valve are uncommon with the possible exception of the spool valve damper O-ring. Do not disassemble the valve body unless absolutely necessary as improper disassembly could result in damage. If the spool valve damper O-ring requires replacement, remove the valve, replace the O-ring, and reinstall the valve immediately. If either the spool valve or valve body require replacement, replace the entire valve body as an assembly only. Do not attempt to interchange parts. If valve body disassembly is absolutely necessary, proceed as outlined in the following steps.*

Disassembly

(1) Remove and discard stub shaft cap O-ring (fig. 2L-26).

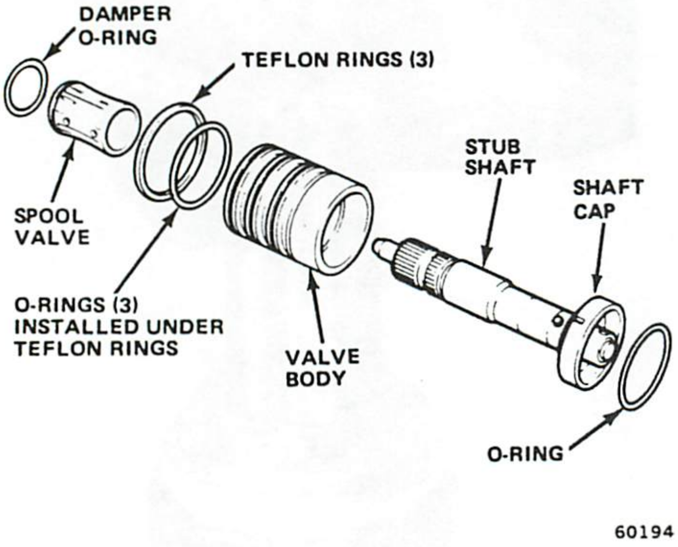

Fig. 2L-26 Valve Body Components

(2) Hold valve body assembly in both hands with stub shaft pointing downward. Tap end of stub shaft lightly against wood block until shaft cap is free of valve body (fig. 2L-27).

(3) Pull stub shaft outward until shaft cap clears valve body by approximately 1/4 inch (6 mm).

CAUTION: *Do not pull the stub shaft out of the valve body any farther than 1/4 inch (6 mm) or the spool valve may become cocked in the valve body.*

(4) Press spool valve locating pin inward and carefully remove stub shaft from valve body and spool valve (fig. 2L-28).

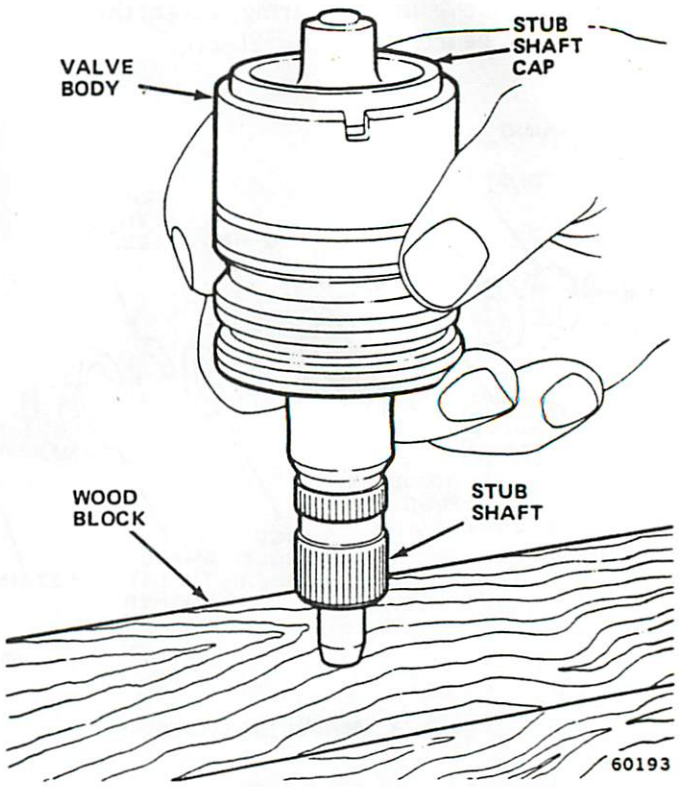

Fig. 2L-27 Separating Stub Shaft and Valve Body

(5) Remove spool valve from valve body using a push and turn motion. If spool valve becomes cocked, carefully realign valve and try removal again. Do not force spool valve out.

(6) Remove and discard spool valve damper O-ring.

(7) Cut and remove valve body seal rings and backup O-rings (fig. 2L-26). Discard all rings.

Cleaning and Inspection

Wash the valve body components in clean solvent and

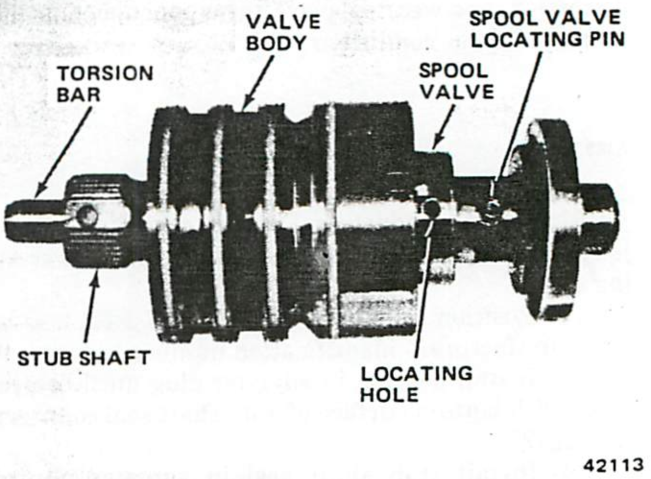

Fig. 2L-28 Valve Body and Spool Valve Disassembly blow out all fluid passages using filtered, compressed air.

If the torsion bar is broken or loose, or if the torsion seal leaked prior to disassembly, replace the entire valve body as an assembly.

If the spool valve locating pin is broken or the valve body is cracked, worn, or broken, replace the entire valve body as an assembly.

NOTE: *Tiny flat spots on either side of the spool valve locating pin are normal.*

A slightly polished appearance is normal for all valve body assembly surfaces. However, if there are scores, nicks, or burrs on the valve body and stub shaft surfaces that cannot be cleaned up with crocus cloth, replace the entire valve body as an assembly.

Inspect the valve body-to-wormshaft locating notch in the valve body skirt (fig. 2L-29). Replace the entire valve body as an assembly if this notch is damaged or excessively worn.

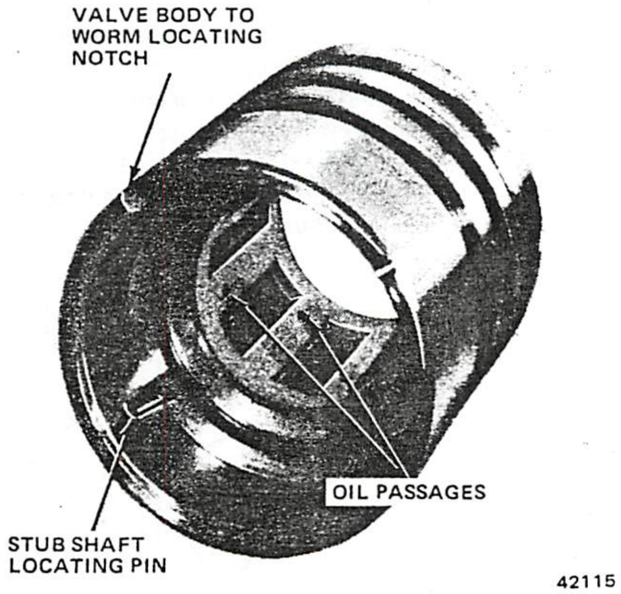

Fig. 2L-29 Valve Body

Inspect the spool valve-to-valve body fit. Lubricate the spool valve with power steering fluid and insert it into the valve body. Replace the entire valve body as an assembly if the spool valve is a loose fit, binds or sticks, or does not rotate freely within the valve body.

Assembly

(1) Lubricate all valve body components with power steering fluid.

(2) Install replacement backup O-rings in seal ring grooves.

(3) Install replacement seal rings over backı rings (fig. 2L-30). Take care to avoid damaging seal during installation.

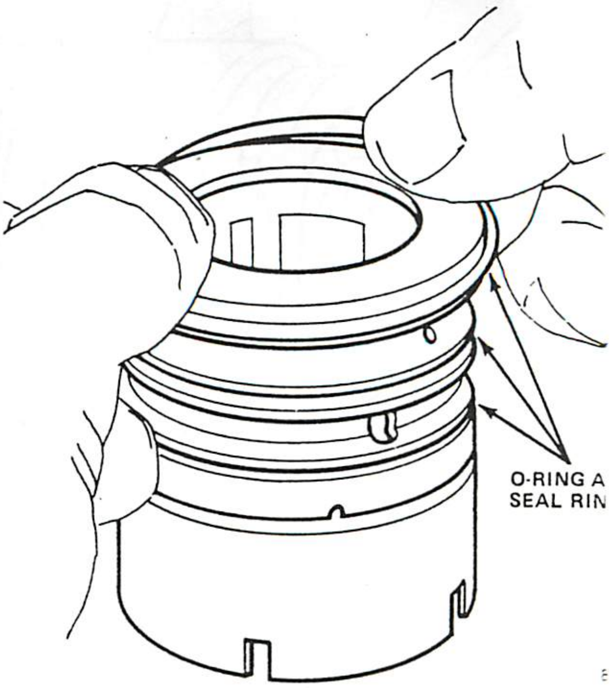

Fig. 2L-30 Valve Body Seal Ring Installation

NOTE: *The teflon seal rings may appear to be dist after installation. However, the heat generate power steering fluid during normal operation straighten them.*

(4) Lubricate replacement spool valve damp ring with petroleum jelly and install O-ring on valve.

(5) Insert spool valve in valve body. Do not at to force spool valve into place.

(6) Push spool valve through valve body until valve locating pin hole is visible at opposite end of body and spool valve is flush with notched end of body.

(7) Install stub shaft in spool valve and valve Be sure stub shaft locating pin is aligned with valve locating hole (fig. 2L-28).

(8) Align notch in stub shaft cap with stub locating pin in valve body and press stub shaft and valve into valve body (fig. 2L-31).

CAUTION: *Before installing the assembled valve in the gear housing, be sure the valve body stub locating pin is fully engaged in the stub shaft cap no*

(9) Lubricate stub shaft cap O-ring with p steering fluid and install O-ring in valve body.

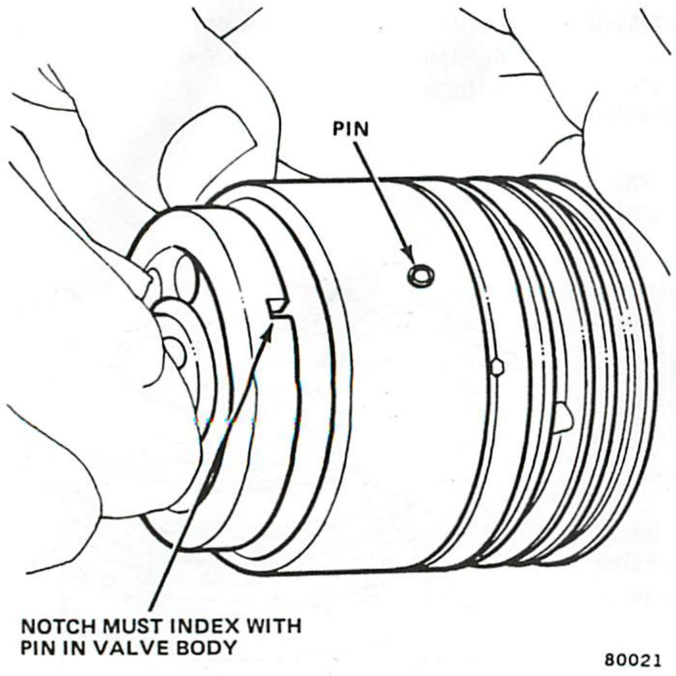

Fig. 2L-31 Stub Shaft Installation

CAUTION: *Do not allow the stub shaft to disengage from the valve body pin. If disengagement occurs, the spool valve will extend too far into the valve body, allow the damper O-ring to expand into the valve body grooves and prevent valve withdrawal. If disengagement occurs, attempt to remove the valve using a pull and turn motion. If this fails, proceed as follows: First be sure the spool valve is free to rotate, then place the valve body on a flat surface with the notched end of the valve body facing upward. Tap the spool valve with a wood or plastic rod until the damper O-ring is cut and remove the valve. Replace the damper O-ring and reassemble the valve body. Be sure all pieces of the cut O-ring are removed before assembly.*

Pitman Shaft and Side Cover

Cleaning and Inspection

Clean the shaft and cover with solvent and wipe them dry with lint free cloths.

Inspect the side cover bearing and mating surfaces for wear, distortion, scoring, or distortion. Replace the cover if it exhibits any of these conditions.

Inspect the pitman shaft bearing and seal surfaces and sector teeth for cracks, wear, pitting, or scoring (fig. 2L-32). Inspect the adjuster screw for looseness, damaged threads, or distortion. Replace the pitman shaft if any of these conditions are noted. However, light scoring, corrosion, or scratches on the shaft surfaces may be removed using crocus cloth.

Inspect the pitman shaft nut threads and master spline for damage (fig. 2L-32). If either of these surfaces are damaged, replace the shaft.

Rack Piston and Wormshaft

Disassembly

(1) Remove wormshaft, lower thrust bearing, and bearing races from rack piston.

(2) Cut and remove seal ring and backup O-ring from rack piston. Discard seal ring and O-ring.

(3) Remove ball return guide clamp attaching screws and remove return guide clamp.

(4) Place rack piston on clean cloth and remove two-piece ball return guide, arbor tool, and ball bearings.

Cleaning and Inspection

Clean all components with solvent and dry them using filtered compressed air.

Inspect the wormshaft for wear, scoring, pitting, distortion, nicked threads, or cracks. Replace the wormshaft if it exhibits any of these conditions. Inspect the rack piston for scored, pitted, or nicked ball bearing grooves. Replace the wormshaft and rack piston as an assembly if either part is damaged.

Inspect the exterior surface of the rack piston for wear or scoring and be sure the seal ring seat is clean and free from burrs.

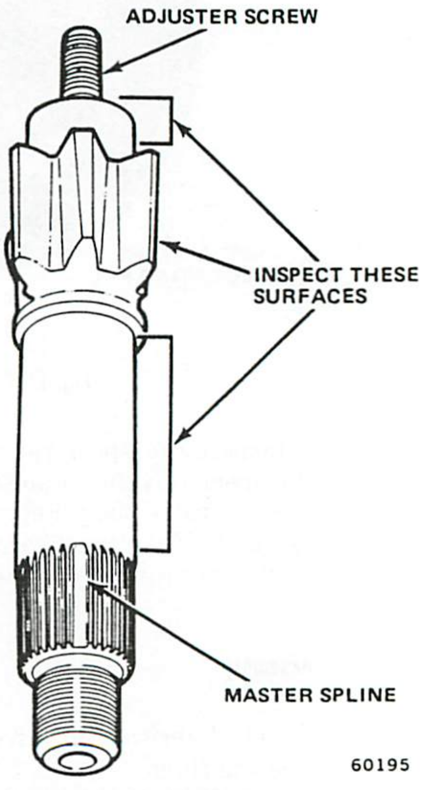

Fig. 2L-32 Pitman Shaft Inspection

Inspect the rack piston teeth for chips, cracks, dents, or scoring. If either the wormshaft or rack piston are damaged, replace both parts as a matched set only.

Inspect each of the ball bearings for dents, nicks, excessive wear, flaking, or flat spots and replace as necessary. Inspect the ball return guides. Be sure the guide ends, where the bearings enter and leave the guides, are free of burrs or distortion.

Inspect the lower thrust bearing and bearing races for wear or scoring. Replace any parts that are damaged or worn.

Assembly

(1) Lubricate all components with power steering fluid.

(2) Install backup O-ring in rack piston seal ring groove.

(3) Install seal ring over backup O-ring (fig. 2L-33).

NOTE: *The seal ring may appear slightly loose after installation, however, this is normal. The seal ring will tighten when exposed to system fluid at operating temperature.*

Fig. 2L-33 Rack Piston Seal Ring Installation

(4) Install wormshaft in rack piston.

(5) Align ball return guide holes with wormshaft grooves.

(6) Alternately install 18 ball bearings in rack piston bearing circuit hole adjacent to seal ring (fig. 2L-34). Install silver ball bearing followed by black ball bearing until 18 bearings have been installed. Rotate wormshaft slowly in counterclockwise direction when installing bearings and press each bearing downward to make room for following bearing.

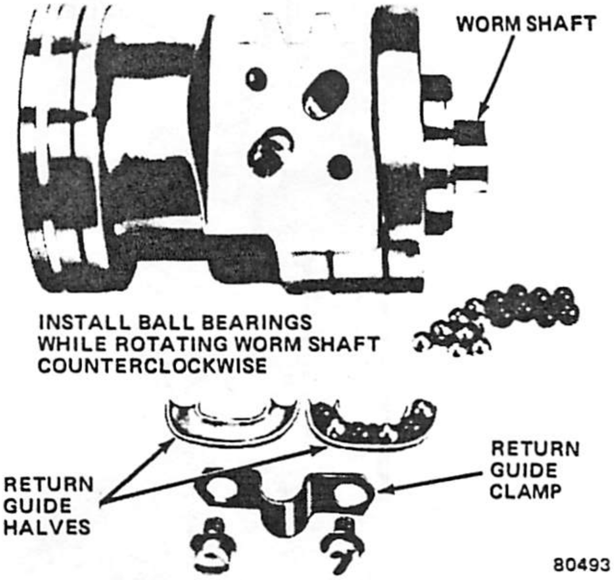

Fig. 2L-34 Rack Piston Ball Bearing Installation

NOTE: *The wormshaft will back out of the rack piston when rotated during bearing installation. Do not allow the wormshaft to back completely out of the rack piston.*

(7) Fill one ball return guide half with petroleum jelly and install six remaining ball bearings in guide (fig. 2L-34). Be sure bearings in guide are in sequence with bearings in rack piston and that total of 24 ball bearings are installed (18 in rack piston and 6 in return guide).

(8) Assemble both ball return guide halves and insert guides in rack piston. Guides should fit loosely.

(9) Position ball return guide clamp over guides and install clamp attaching bolts and washers. Tighten bolts to 10 foot-pounds (14 N•m) torque.

(10) Insert Arbor Tool J-21552 into rack piston until it contacts wormshaft.

(11) Apply steady pressure against arbor tool to maintain contact with wormshaft and back wormshaft out of rack piston.

NOTE: *Do not allow the arbor tool and wormshaft to separate during wormshaft removal. The ball bearings could drop out of their circuits and fall inside the rack piston making another disassembly/assembly procedure necessary.*

(12) Position assembled rack piston and arbor tool on end and support assembly on wood blocks until ready to install in housing (fig. 2L-35).

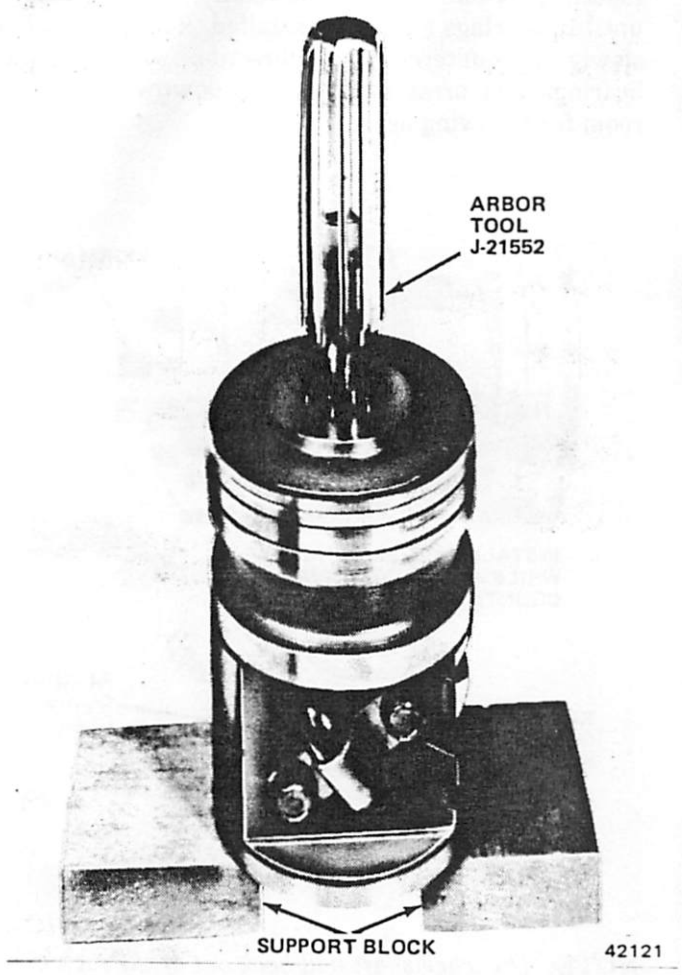

Fig. 2L-35 Arbor Tool Installed In Rack Piston

NOTE: *Do not allow the arbor tool to separate from the rack piston.*

STEERING GEAR ASSEMBLY AND ADJUSTMENT

(1) Lubricate all components with power steering fluid.

(2) Remount steering gear in vise (fig. 2L-12). Clamp unmachined boss portion of housing in vise only.

(3) Install wormshaft lower thrust bearing and bearing races on wormshaft. Installation sequence is: race—bearing—race (fig. 2L-36). Coned sides of races must face rack piston when installed.

(4) Install stub shaft cap O-ring in valve body (if not installed previously). Be sure O-ring is seated against edge of stub shaft cap.

(5) Insert wormshaft into valve body. Rotate wormshaft until drive lugs engage in stub shaft cap and wormshaft locating pin engages in valve body notch (fig. 2L-37).

(6) Install assembled valve body and wormshaft in housing. Be sure wormshaft locating pin is still fully engaged in valve body notch before installing (fig. 2L-37).

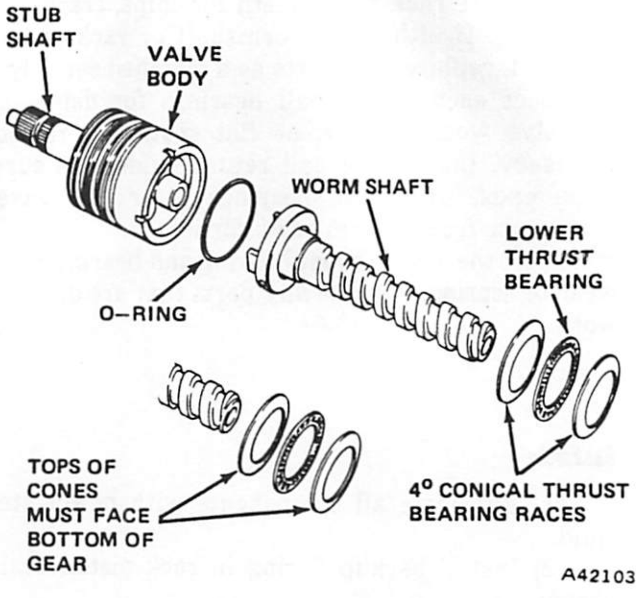

Fig. 2L-36 Wormshaft and Valve Body Assembly

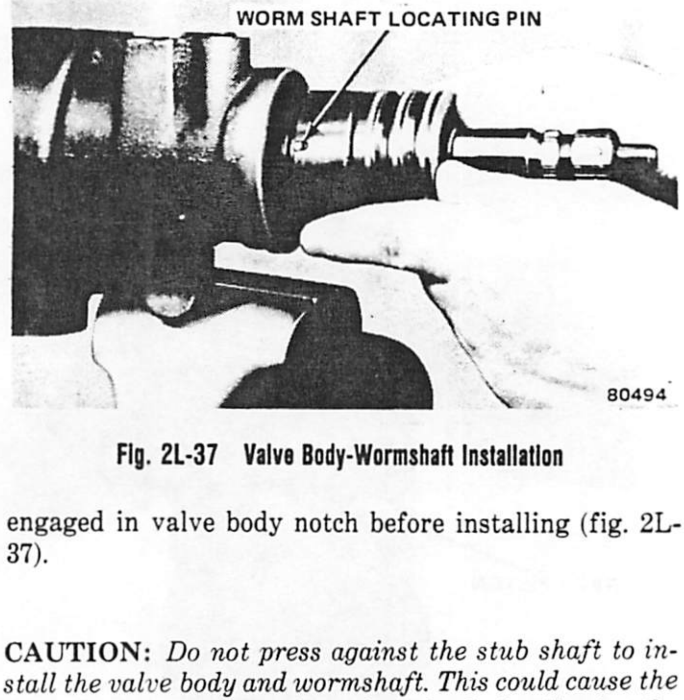

Fig. 2L-37 Valve Body-Wormshaft Installation

CAUTION: *Do not press against the stub shaft to install the valve body and wormshaft. This could cause the stub shaft to disengage from the valve body allowing the spool valve O-ring to slip into the valve body oil grooves. Perform installation by pressing directly on the valve body with the fingertips only (fig. 2L-37). In addition, be sure the valve body is properly seated before installing the adjuster plug. When the valve body is seated correctly, the fluid return port in the gear housing will be fully visible (fig. 2L-38). If the port is not visible, the valve body and wormshaft are misaligned or the thrust bearing and races are improperly installed.*

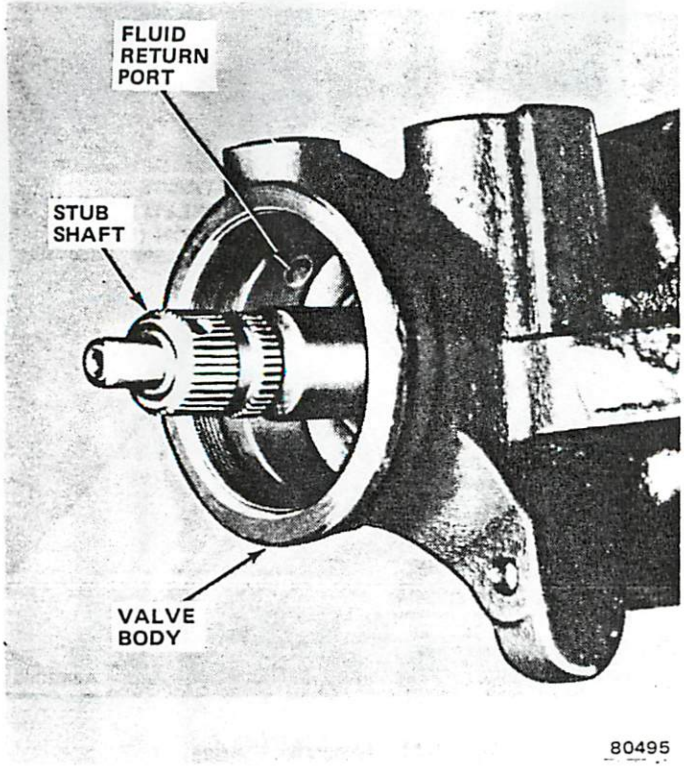

Fig. 2L-38 Seating Valve Body

(7) Place Seal Protector Tool J-29810 over end of stub shaft and install adjuster plug in housing (fig. 2L-39). Tighten adjuster plug to 20 foot-pounds (27 N•m) torque.

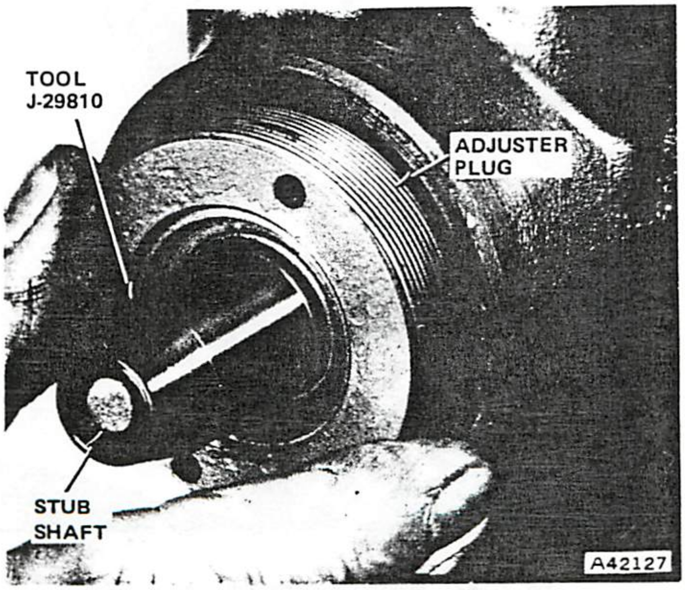

Fig. 2L-39 Adjuster Plug Installation

(8) Remove seal protector tool from stub shaft.

(9) Install rack piston in housing. Be sure wormshaft remains engaged with stub shaft. Do not damage rack piston seal ring during installation.

(10) Align wormshaft with rack piston and turn stub shaft clockwise to engage wormshaft in rack piston. Maintain steady pressure on arbor tool until wormshaft is fully engaged in rack piston.

(11) Remove arbor tool when rack piston seal ring is inside housing.

(12) Rotate stub shaft until center tooth groove in rack piston is aligned with center of pitman shaft bore.

(13) Install side cover gasket on side cover. Be sure gasket rubber seal is seated in cover groove.

(14) Install side cover on pitman shaft.

(15) Thread side cover onto pitman shaft adjuster screw until cover bottoms against shaft.

(16) Install pitman shaft in housing and mesh center sector tooth of shaft with center tooth groove in rack piston.

(17) Align side cover on housing and install cover attaching bolts. Tighten bolts to 45 foot-pounds (61 N•m) torque. Be sure cover gasket is properly seated before installing cover bolts.

(18) Thread adjuster screw locknut half-way onto pitman shaft adjuster screw. Use hex wrench to prevent adjuster screw from turning while installing locknut.

NOTE: *The locknut has left-hand threads.*

(19) Install end plug in rack piston and tighten plug to 75 foot-pounds (102 N•m) torque.

(20) Lubricate housing end plug O-ring with petroleum jelly.

(21) Install housing end plug and seat plug against O-ring. If necessary, tap end plug lightly with plastic mallet to seat it. Do not displace O-ring during installation.

(22) Install housing end plug retainer ring. Position ring end gap one inch (25.4 mm) away from hole in side of housing. Tap end plug lightly to be sure plug and retainer ring are seated.

(23) Adjust wormshaft bearing preload and pitman shaft overcenter drag torque as outlined in Steering Gear Adjustment.

Steering Gear Adjustment

The steering gear requires two adjustments which are: wormshaft bearing preload and pitman shaft over center drag torque.

Wormshaft bearing preload is controlled by the amount of compression force exerted on the conical wormshaft thrust bearing races by the adjuster plug.

Pitman shaft overcenter drag torque is controlled by the pitman shaft adjuster screw which determines the clearance between the rack piston and pitman shaft sector teeth.

CAUTION: *The following adjustment procedures must be performed exactly as described and in the sequence outlined. Failure to do so can result in damage to the gear internal components and poor steering response. Always adjust wormshaft bearing preload first; then adjust pitman shaft overcenter drag torque last.*

Wormshaft Bearing Preload

(1) Seat adjuster plug in housing using Spanner Wrench J-7624 (fig. 2L-16). Approximately 20 foot-pounds (27 N•m) torque is required to seat plug.

(2) Place index mark on gear housing in line with one of the holes in adjuster plug (fig. 2L-40).

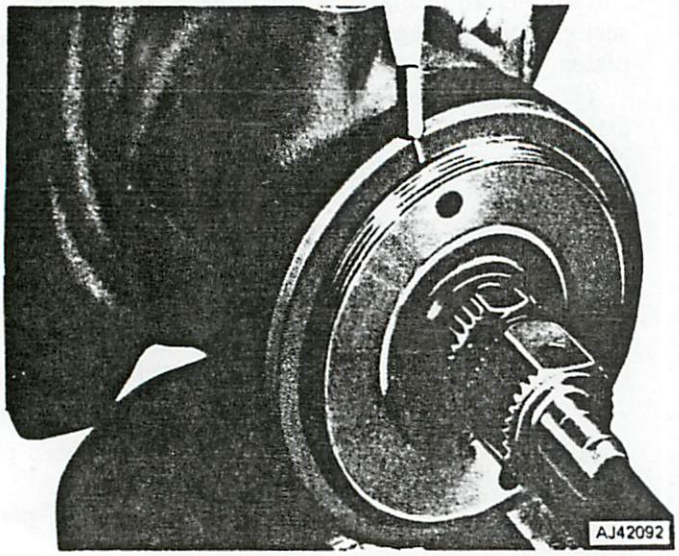

Fig. 2L-40 Marking Housing

(3) Measure back (counterclockwise) 1/2 inch (13 mm) from first index mark and remark housing (fig. 2L-41).

(4) Turn adjuster plug counterclockwise and align adjuster plug hole with second mark made on housing.

(5) Install adjuster plug locknut. Place spanner wrench on adjuster plug to prevent it from turning and tighten locknut to 85 foot-pounds (115 N•m) torque using Tool J-25194. Do not allow the adjuster plug to turn while tightening locknut.

(6) Turn stub shaft clockwise to stop, then turn stub shaft back one-quarter turn.

(7) Assemble torque wrench with maximum capacity of 50 inch-pounds (6 N•m) and 12-point deep socket and install wrench on splined end of stub shaft (fig. 2L-42).

(8) Measure torque required to turn stub shaft. Take reading with beam of torque wrench at or near vertical position while turning stub shaft at an even rate (fig. 2L-42).

Fig. 2L-41 Remarking Housing

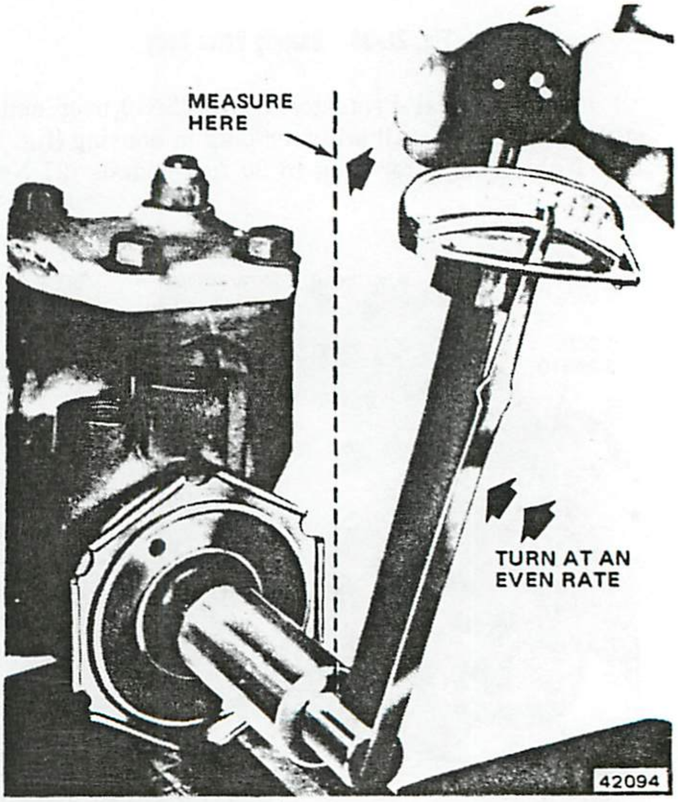

Fig. 2L-42 Measuring Wormshaft Bearing Preload

(9) Record reading. Torque required to turn stub shaft should be 4 to 10 inch-pounds (0.45 to 1.1 N•m) torque.

NOTE: *If the measured torque reading is above or below the specified limits, the adjuster plug may have turned when the locknut was tightened, or the gear may be incorrectly assembled, or the wormshaft thrust bearings and races may be defective. Repair as required and remeasure preload.*

Pitman Shaft Overcenter Drag Torque

(1) Loosen adjuster screw locknut. Turn pitman shaft adjuster screw counterclockwise until screw is fully extended; then turn screw back one full turn in clockwise direction.

(2) Rotate stub shaft from stop-to-stop and count total number of turns.

(3) Starting from either stop, turn stub shaft back 1/2 total number of turns. This is gear center.

NOTE: *When the gear is centered, the flat on the stub shaft should face upward and be parallel with the side cover (fig. 2L-43). In addition, the master spline on the pitman shaft should be in line with the adjuster screw (fig. 2L-44).*

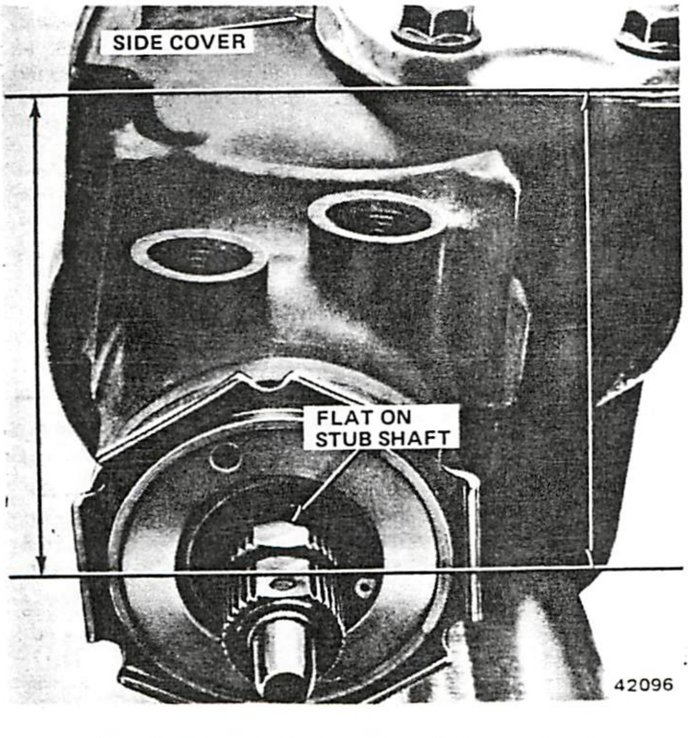

Fig. 2L-43 Stub Shaft Position with Gear Centered

(4) Install 50 inch-pound (6 N•m) torque wrench and deep socket on stub shaft and place wrench in vertical position to take reading (fig. 2L-45).

(5) Rotate torque wrench 45 degrees each side of center and record highest drag torque measured on or near center (fig. 2L-45). Record drag torque reading.

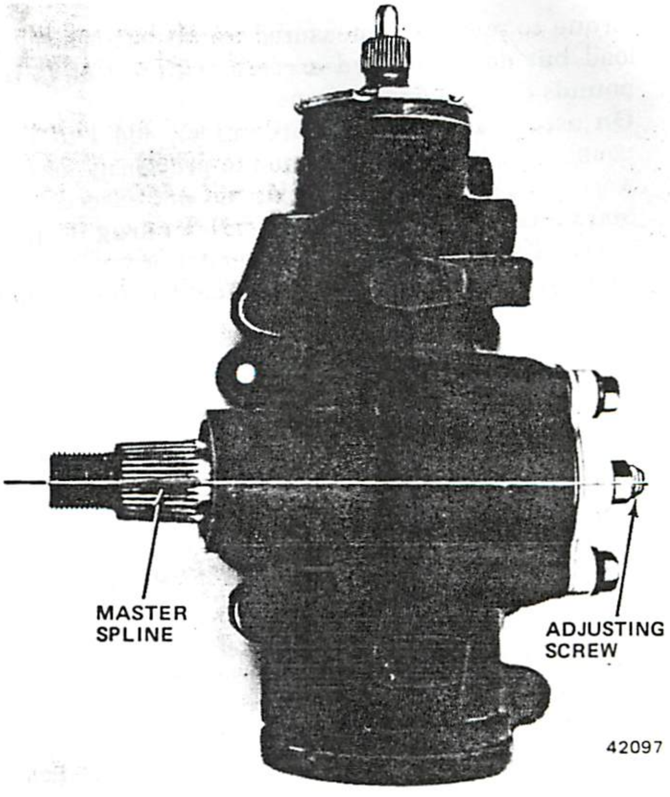

Fig. 2L-44 Pitman Shaft Master Spline Position with Gear Centered

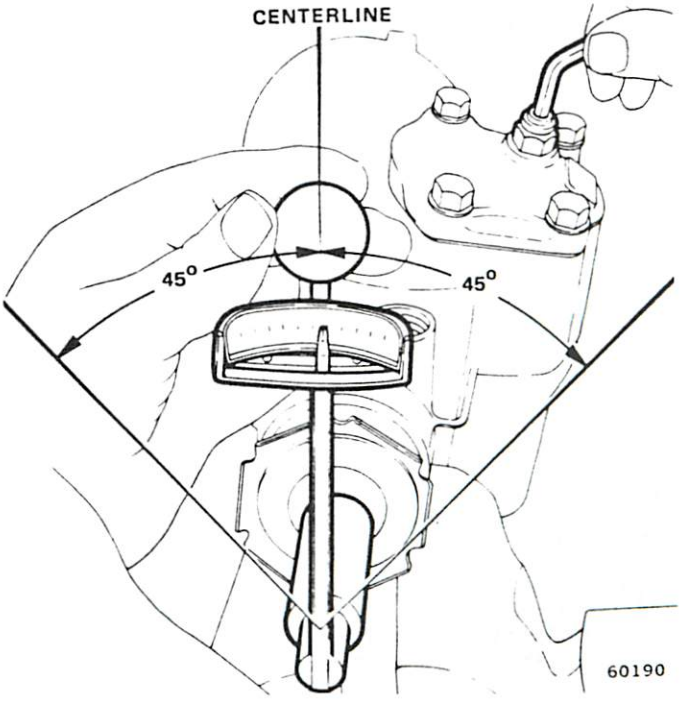

Fig. 2L-45 Measuring Pitman Shaft Overcenter Drag Torque

(6) Adjust drag torque by turning pitman shaft adjuster screw clockwise until desired drag torque is obtained. Adjust drag torque to following limits:
On new gears, add 4 to 8 inch-pounds (0.45 to 0.90 N•m)

torque to previously measured wormshaft bearing preload **but do not exceed a combined total of 14 inch-pounds (2 N•m) drag torque.**

On used gears (400 or more miles), add 4 to 5 inch-pounds (0.5 to 0.6 N•m) torque to previously measured wormshaft bearing preload **but do not exceed a combined total of 14 inch-pounds (2 N•m) drag torque.**

(7) Tighten pitman shaft adjuster screw locknut after adjusting overcenter drag torque. Tighten locknut to 20 foot-pounds (27 N•m) torque. Use hex wrench to prevent adjuster from turning while tightening adjuster screw (fig. 2L-14).

(8) Install steering gear and fill power steering pump reservoir with Jeep Power Steering Fluid, or equivalent.

(9) Bleed air from power steering system. Refer to Fluid Level and Initial Operation in Power Steering Pump section.

SPECIFICATIONS

Power Steering Gear Specifications

Type	Recirculating Ball, worm and nut.
Bearings	
Wormshaft Upper	Needle Roller
Lower	Needle Roller
Pitman Shaft	Needle Roller
Fluids	Use Jeep Power Steering Fluid or equivalent only. Do not use transmission fluid.
Power Steering System Fluid Capacity	1-1/4 pints (0.59 liters)
Steering Gear Adjustment:	
Worm Bearing Preload	4 to 10 inch-pounds (0.45 to 1.13 N·m) rotating torque. Refer to Steering Gear Adjustment.
Pitman Shaft Overcenter Drag Torque	
(New gear with less than 400 miles service)	4 to 8 inch-pounds (0.45 to 0.90 N·m) in addition to worm bearing preload but not to exceed total of 14 inch-pounds (1.58 N·m)
(Used gear with over 400 miles service)	4 to 5 inch-pounds (0.45 to 0.56 N·m) in addition to worm bearing preload but not to exceed total of 18 inch-pounds (2.03 N·m)
Steering Ratio	
CJ-Scrambler	17.5:1 constant ratio
Cke-Wag-Trk	13/16:1 variable ratio
Valve Body	Three-way, open center, rotary-type.

80499

Torque Specifications

Service Set-To Torques should be used when assembling components. Service In-Use Recheck Torques should be used for checking a pre-tightened item.

	USA (ft-lbs)		Metric (N·m)	
	Service Set-To Torque	Service In-Use Recheck Torque	Service Set-To Torque	Service In-Use Recheck Torque
Adjuster Plug Locknut	85	75-95	115	102-129
Flexible Coupling-to-Stubshaft Clamp Bolt (CJ-Scrambler)	45	40-50	61	54-68
Flexible Coupling-to-Stubshaft Clamp Bolt (Cke-Wag-Trk)	30	25-35	41	34-47
Gear Mounting Bolts (Cke-Wag-Trk)	70	60-80	95	81-108
Gear Mounting Bracket-to-Frame Bolts (CJ-Scrambler)	55	50-65	75	68-88
Hose Fittings	30	25-35	41	34-47
Intermediate Shaft Clamp Bolt/Nut	30	25-35	31	34-47
Mounting Bracket-to-Gear Bolts (CJ-Scrambler)	70	60-80	95	81-108
Pitman Arm Nut	185	170-210	251	230-285
Pitman Shaft Adjuster Screw Locknut	20	18-22	27	24-30
Return Guide Clamp Bolt	6	4-10	8	5-14
Rack-Piston End Plug	75	72-77	102	98-104
Side Cover Bolts	40	30-45	54	41-61

All torque values given in foot-pounds and newton-meters with dry fits unless otherwise specified.

80500

POWER STEERING PUMP

IN-VEHICLE SERVICE

Pump *Shaft* Seal and Pump Pulley

Removal

(1) Loosen pump belt adjusting bolts, push pump toward engine, and remove pump belt.

(2) Remove pump pulley using Tool J-25034 (fig. 2L-46).

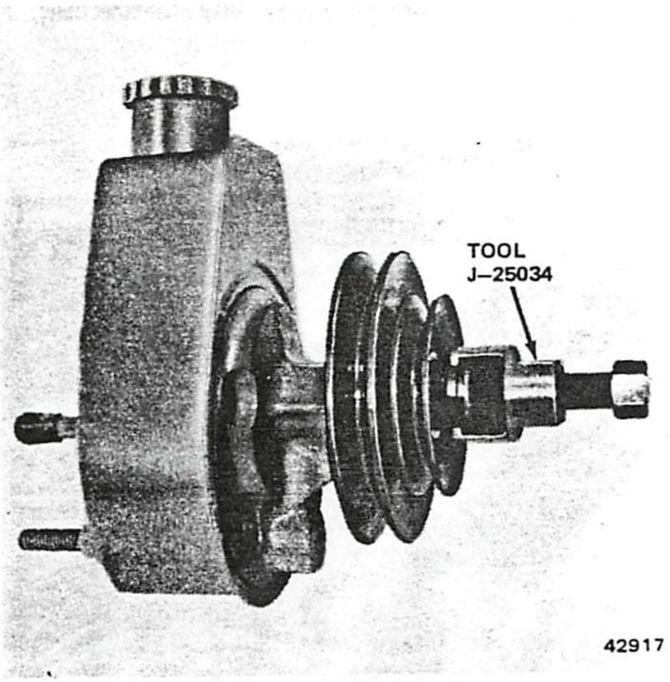

Fig. 2L-46 Pump Pulley Removal

(3) Remove shaft seal using Tool J-8842. Or, if seal remover tool is not available, remove seal as follows:

(a) Wrap length of 0.005-inch (0.12 mm) thick shimstock, approximately 2-1/2 inches (6.35 cm) long, around pump shaft. Work shimstock under and past shaft seal until shimstock bottoms in seal bore (fig. 2L-47).

(b) Cut metal body of shaft seal using sharp chisel and pry seal out of pump body using screwdriver (fig. 2L-47). Do not scratch or nick pump shaft or seal bore during seal removal.

(4) Remove any small nicks, scratches, or corrosion from pump shaft with crocus cloth.

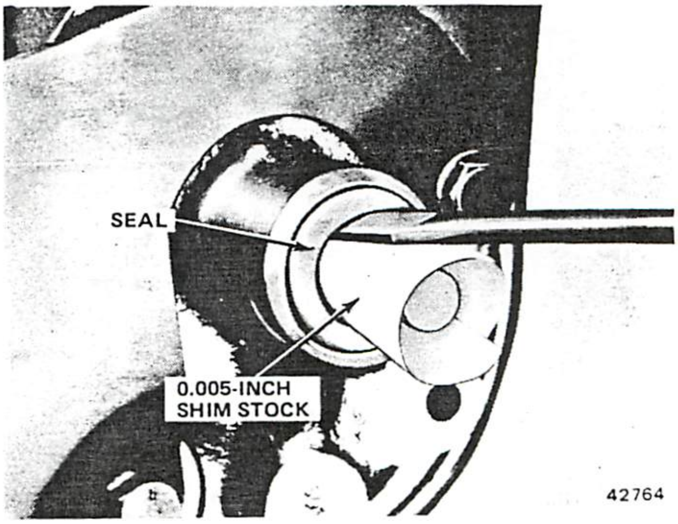

Fig. 2L-47 Pump Shaft Seal Removal

Installation

(1) Lubricate pump shaft and replacement seal with power steering fluid.

(2) Install seal on pump shaft and insert seal into pump body seal bore. Be sure spring side of seal faces toward pump body.

(3) Seat seal using Tool J-7728 (fig. 2L-48).

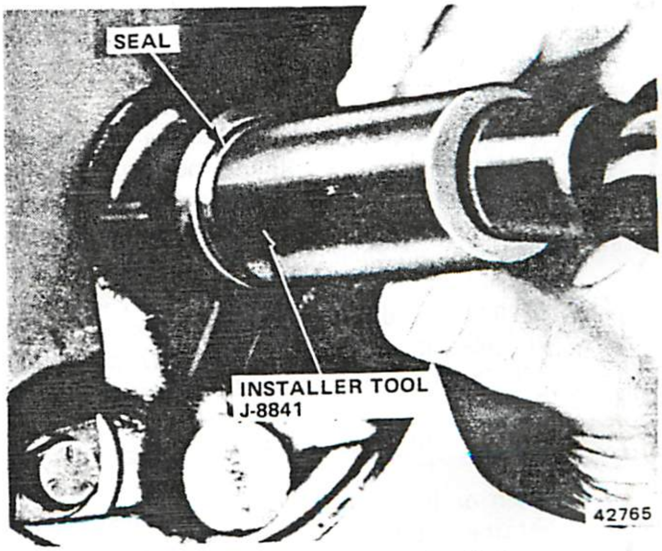

Fig. 2L-48 Pump Shaft Seal Installation

(4) Install pump pulley using Tool J-25033 (fig. 2L-49).

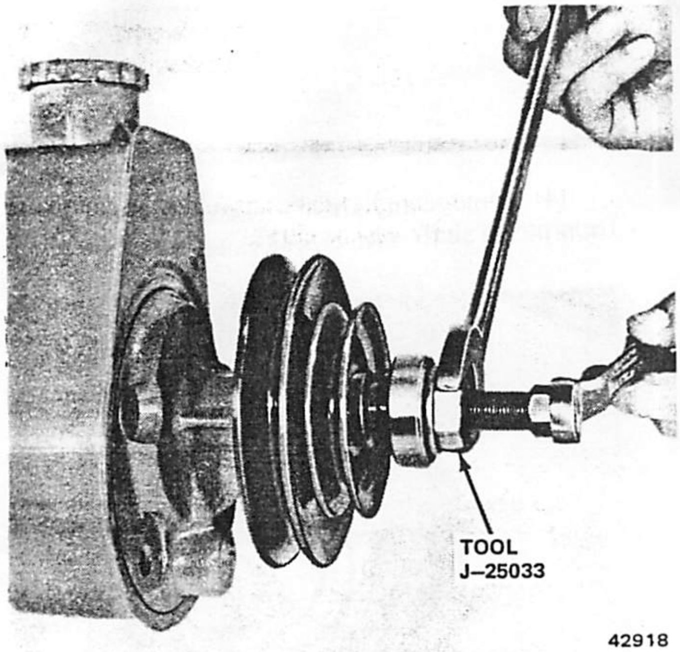

Fig. 2L-49 Pump Pulley Installation

(5) Install pump belt and adjust belt tension. Refer to Belt Tension Adjustment.

(6) Fill pump reservoir with power steering fluid and bleed air from system. Refer to Fluid Level and Initial Operation.

Belt Tension Adjustment

CAUTION: *The power steering pump on all vehicles built for sale in California is driven by a Serpentine drive belt. The pump should not be moved in an attempt to adjust the belt. Refer to Chapter 1C for belt adjustment instructions.*

Use Tension Gauge J-23600 to measure belt tension (fig. 2L-51). When using the gauge, position it at the center of the longest belt span to check tension. If checking tension on a notched belt, be sure the gauge finger is seated in one of the notched grooves in the belt.

(1) Loosen pump adjusting bracket bolts.

(2) Pull back on adjuster bracket with a 1/2-inch drive breaker bar until belt is tight. Tighten adjusting bracket bolts.

(3) Measure belt tension with Gauge J-23600 (fig. 2L-51).

(4) Tighten or loosen pump belt until desired belt tension is obtained. Refer to Specifications for belt tension figures for various models.

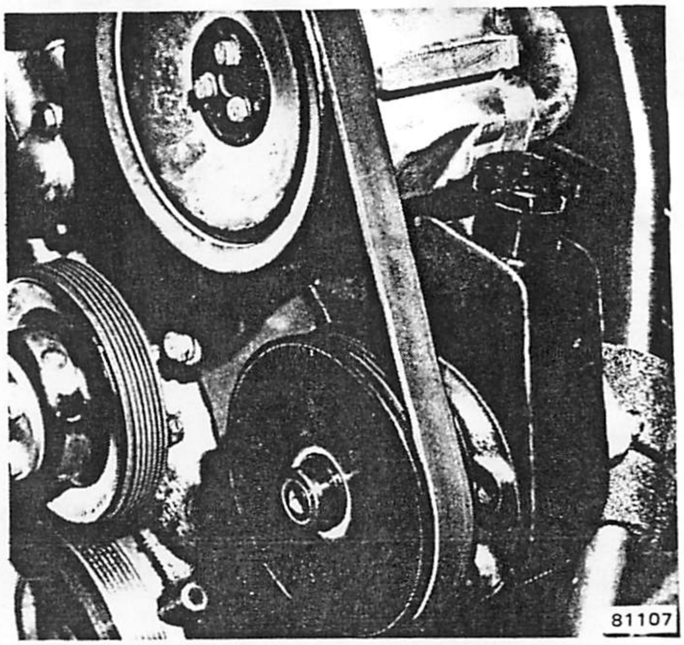

Fig. 2L-50 Power Steering Pump Belt Drive (California Only)

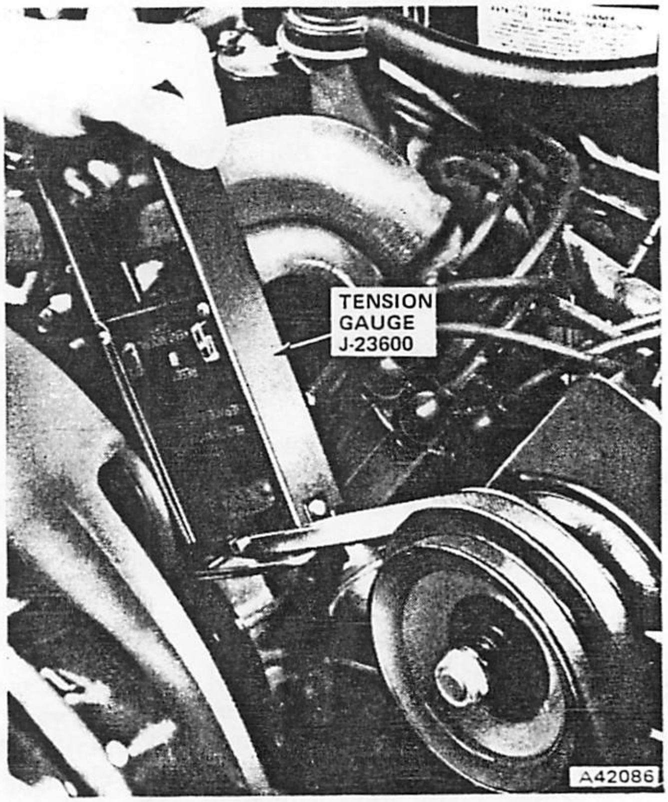

Fig. 2L-51 Checking Belt Tension

(5) Tighten all pump mounting and adjusting bracket bolts to 30 foot-pounds (41 N•m) torque after adjusting belt tension.

Flow Control Valve

Removal

(1) Position drain pan under engine.

(2) Disconnect pressure hose at pump. Cap hose to prevent dirt entry and excessive fluid loss.

NOTE: *Some power steering pump units may have a metric thread pressure port fitting. This fitting is designed for use with a pressure hose that uses an O-ring seal (fig. 2L-7, View B).*

(3) Remove pump union fitting and O-ring (fig. 2L-52). Discard O-ring.

(4) Remove flow control valve and spring using pencil-type magnet.

Installation

(1) Lubricate replacement flow control valve and union fitting O-ring with power steering fluid.

(2) Insert hex-end of flow control valve in replacement valve spring.

(3) Install assembled valve and spring in pump bore, spring-end first.

(4) Install replacement O-ring seal on pump union fitting and install fitting in pump. Tighten fitting to 35 foot-pounds (47 N•m) torque.

(5) If pump pressure hose has metric fitting that uses an O-ring seal, check seal condition before connecting hose to pump. Replace seal if damaged or worn.

(6) Connect pressure hose to pump. Tighten hose fitting to 35 foot-pounds (47 N•m) torque.

(7) Fill pump reservoir with power steering fluid.

(8) Start engine and check for leaks. Repair any leaks as necessary.

(9) Bleed air from power steering system. Refer to Fluid Level and Initial Operation.

(10) Remove drain pan.

FLUID LEVEL AND INITIAL OPERATION

The power steering system must be purged of air whenever service procedures involving pump or gear disassembly or hose removal have been performed. Air

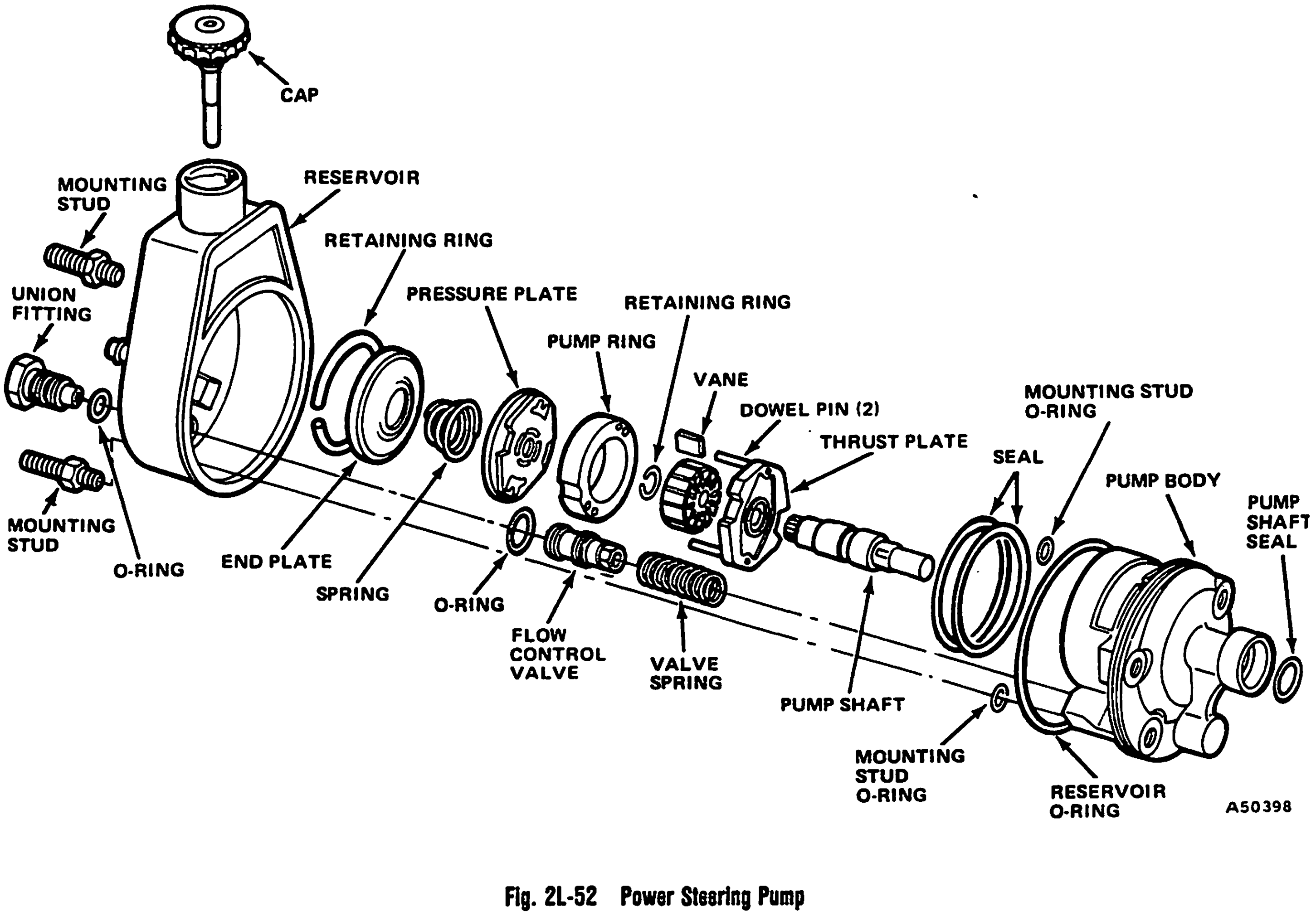

Fig. 2L-52 Power Steering Pump

must be removed from the system in order to obtain normal steering action and response. When necessary, bleed the power steering system as follows:

(1) Fill pump reservoir with power steering fluid.

(2) Operate engine until fluid reaches normal operating temperature of 170°F (76°C).

(3) Stop engine.

(4) Check and correct pump reservoir fluid level as necessary.

(5) Turn wheels to full left turn position and add fluid to reservoir until at FULL COLD mark on dipstick.

(6) Start and operate engine at fast idle speed.

(7) Recheck reservoir fluid level and add fluid until at COLD mark on dipstick.

(8) Bleed air from system by turning wheels from side to side without contacting steering stops in either direction. Maintain fluid level just above pump body. Fluid with air in it will be full of bubbles and have light tan or tan-orange coloration.

(9) Continue turning wheels side to side until all air has been bled from system. Air must be eliminated before normal steering action can be obtained.

(10) When air has been purged from system, return wheels to straight-ahead position and operate engine for additional 2 to 3 minutes then stop engine.

(11) Road test vehicle to check steering action and response.

(12) Recheck fluid level. Level should be at HOT mark on dipstick after system has stabilized at normal operating temperature. Add fluid if necessary but do not overfill.

PUMP REMOVAL

(1) Loosen pump adjusting bracket bolts and nuts and remove pump belt. Also remove air pump belt, if equipped.

(2) Disconnect pressure and return hoses at pump. Cap hoses to prevent dirt entry.

(3) On models with eight-cylinder engine, remove bolts attaching pump front mounting bracket to engine and remove pump and bracket as assembly.

(4) On models with six-cylinder engine, remove pump mounting bolts and nuts and remove pump.

(5) On models with eight-cylinder engine, if pump is to be disassembled, remove front mounting bracket from pump.

PUMP INSTALLATION

(1) On models with eight-cylinder engine, install front mounting bracket on pump.

(2) On all models, position pump in mounting bracket on engine and install pump-to-bracket attaching bolts and nuts.

(3) Fill pump reservoir with power steering fluid and turn pump pulley counterclockwise until bubbles no longer appear in fluid.

(4) Install pump drive belt. Also install air pump drive belt, if equipped.

(5) Adjust belt tension. Pull back on adjuster bracket with breaker bar until belt is tight. Tighten adjusting bracket bolts.

(6) Check and adjust belt tension using Tension Gauge J-23600 (fig. 2L-51). Refer to Belt Tension Adjustment.

(7) Tighten all pump mounting bolts to 30 foot-pounds (41 N•m) torque.

(8) Fill pump reservoir and bleed air from power steering system. Refer to Fluid Level and Initial Operation.

PUMP DISASSEMBLY

(1) Remove reservoir filler cap and drain fluid from pump.

(2) Reinstall filler cap and clean pump with solvent to remove exterior dirt.

(3) Remove pump pulley using Tool J-25034 (fig. 2L-46).

CAUTION: *Inspect the exposed surface of the pump shaft. Remove all traces of corrosion or nicks and scratches with crocus cloth before disassembling the pump. This will avoid damaging the pump bushing during disassembly—which might necessitate replacement of the entire pump body.*

(4) Mount pump in vise so pump shaft is pointing downward. Do not overtighten vise as pump body could be distorted.

(5) Remove pump union fitting and O-ring (fig. 2L-52). Discard O-ring.

(6) Remove pump mounting studs.

(7) Remove pump reservoir and reservoir O-ring. Rock reservoir back and forth to unseat it. Discard O-ring.

(8) Remove mounting stud O-rings from counterbores in pump body (fig. 2L-52). Discard O-rings.

(9) Remove end plate retaining ring. Unseat ring using punch inserted through 1/8-inch (3.17 mm) hole in pump body opposite flow control valve and remove ring using screwdriver (fig. 2L-53).

(10) Remove end plate and spring (fig. 2L-52). If plate sticks in pump body, tap plate lightly with plastic mallet to free it.

(11) Remove flow control valve and valve spring from pump using pencil-type magnet. Or, remove pump from vise, invert pump, and allow valve and spring to slide out of pump bore.

(12) Remove pump shaft, thrust plate, rotor and vanes, pump ring, and pressure plate as assembly. Remount pump in vise so shaft bore faces downward and tap end of pump shaft with plastic mallet to remove assembly (fig. 2L-54).

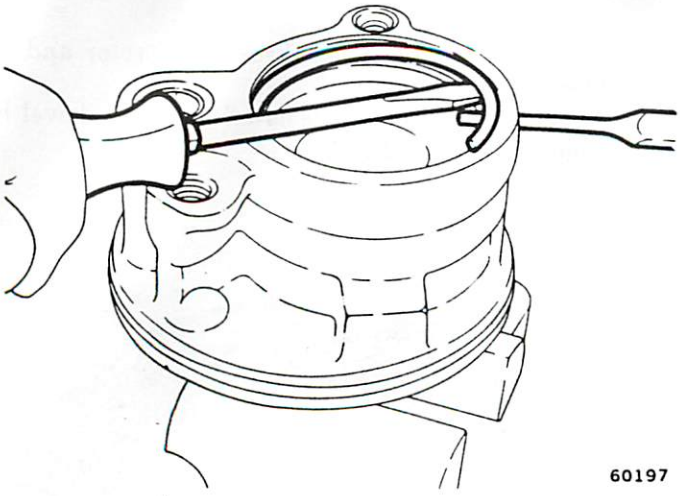

Fig. 2L-53 End Plate Retaining Ring Removal

(13) Remove pump shaft snap ring and remove pressure plate, pump ring, rotor and vanes, and thrust plate from shaft.

(14) Remove end plate O-rings from pump body bore. Discard O-rings.

(15) Remove pump shaft seal from pump shaft bore using Tool J-8842.

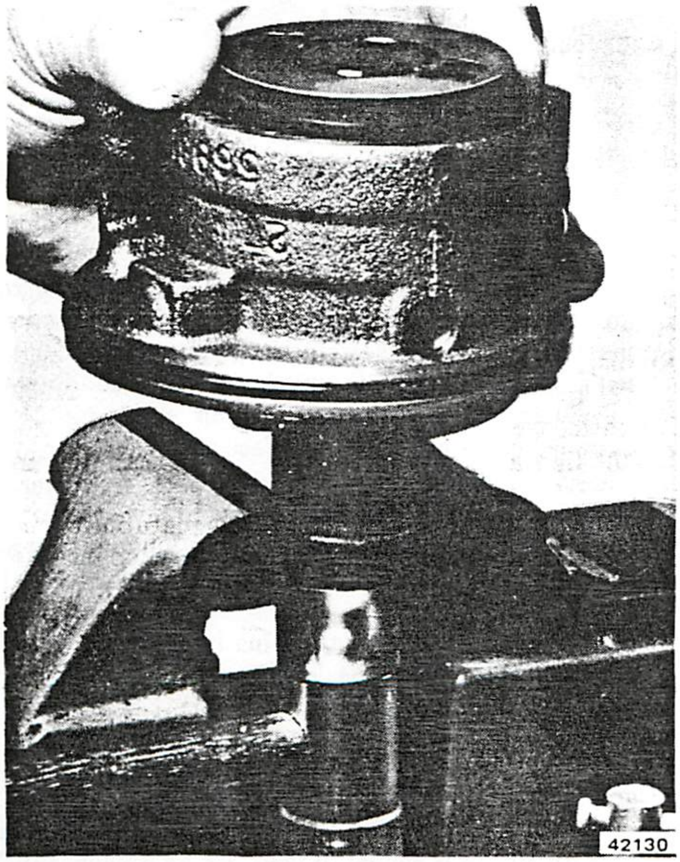

Fig. 2L-54 Pump Shaft Assembly Removal

Cleaning and Inspection

Clean all parts in solvent and dry them using filtered compressed air.

Inspect the flow control valve and valve bore for pitting, scoring, or wear and inspect the valve spring for distortion or loss of tension. Insert the valve in the valve bore and check for free movement. The valve must not stick or bind. Replace the valve and spring as an assembly only if either part exhibits any of the above conditions. Replace the pump body if the valve bore is damaged.

Check the capscrew located in the end of the flow control valve. If loose, tighten it but take care to avoid scratching or scoring the valve surfaces. Minor surface irregularities can be removed using crocus cloth (only).

NOTE: *The flow control valve and spring are serviced as an assembly only. Do not attempt to disassemble the flow control valve at any time.*

Inspect the pressure plate, pump ring, and thrust plate surfaces for wear, cracks, scoring, or pitting. Also check the surfaces for flatness and for being parallel with the pump ring. Replace any part that is worn or damaged.

NOTE: *A high polish will always be present on the pressure plate surfaces as a result of normal operating contact with the rotor. Do not confuse this polish with wear or scoring.*

Inspect the rotor surfaces for pitting, wear, cracks, or scoring and check all the rotor vanes for free movement in the rotor slots. The vanes must not stick or bind. Replace the rotor if damaged or worn and replace the vanes if scored, worn, cracked, chipped, or if they stick or bind.

Inspect the pump shaft for nicks, scoring, wear, cracks, or worn splines. Replace the shaft if it exhibits any of these conditions.

Inspect the pump body and reservoir for cracks, porosity, or distortion and check the pump body bores and O-ring counterbores for damage. Replace either part if any of these conditions are noted.

PUMP ASSEMBLY

CAUTION: *Do not allow dirt to enter the pump during assembly. All parts must be clean and lubricated before installation. Perform all assembly operations on a clean work surface or a surface covered with clean, lint free shop towels only. Install replacement O-rings, seals, and snap rings only during assembly. Used or worn seals will cause leaks, noise and rapid wear after assembly.*

(1) Lubricate pressure plate, end plate, and all replacement O-ring seals with petroleum jelly. Lubricate all other parts with power steering fluid.

(2) Install one end plate O-ring seal in third (bottom) groove in pump body bore (fig. 2L-55).

(3) Install dowel pins in thrust plate (fig. 2L-56).

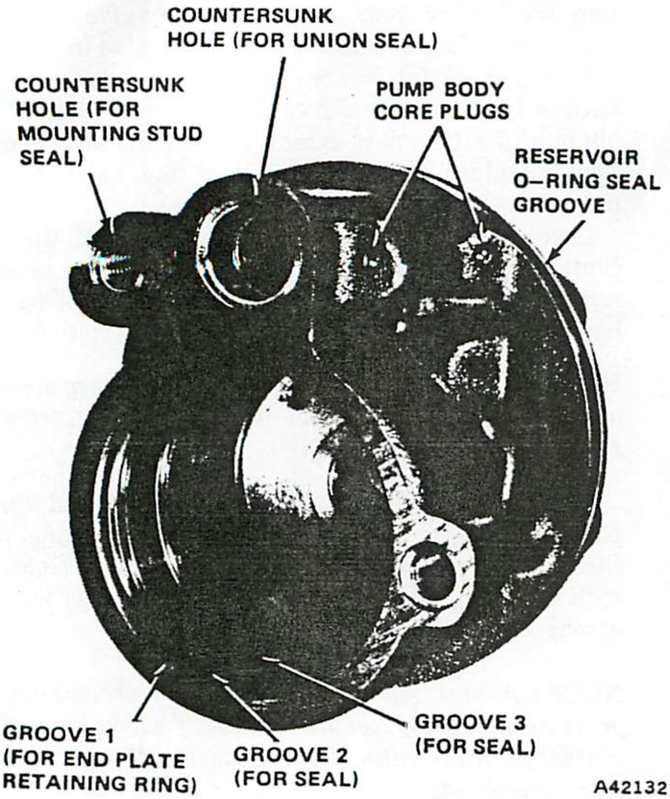

Fig. 2L-55 Pump O-Ring Seal Locations

(4) Position rotor on thrust plate and align shaft bores in rotor and plate.

(5) Assemble pump shaft, thrust plate, and rotor. Insert splined end of shaft through thrust plate and rotor and install shaft snap ring (fig. 2L-56). Do not overspread snap ring. Open it only enough to install it.

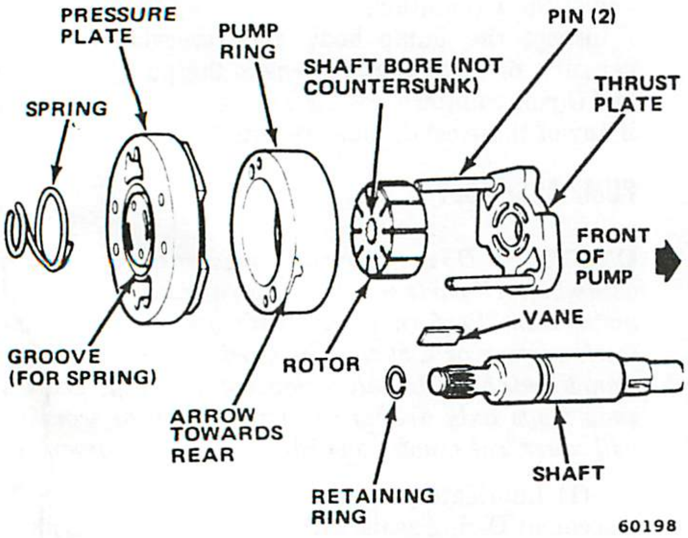

Fig. 2L-56 Pump Shaft Assembly Sequence

(6) Install assembled thrust plate, rotor and pump shaft in pump body bore.

(7) Align thrust plate dowel pins with dowel holes in pump ring (fig. 2L-57).

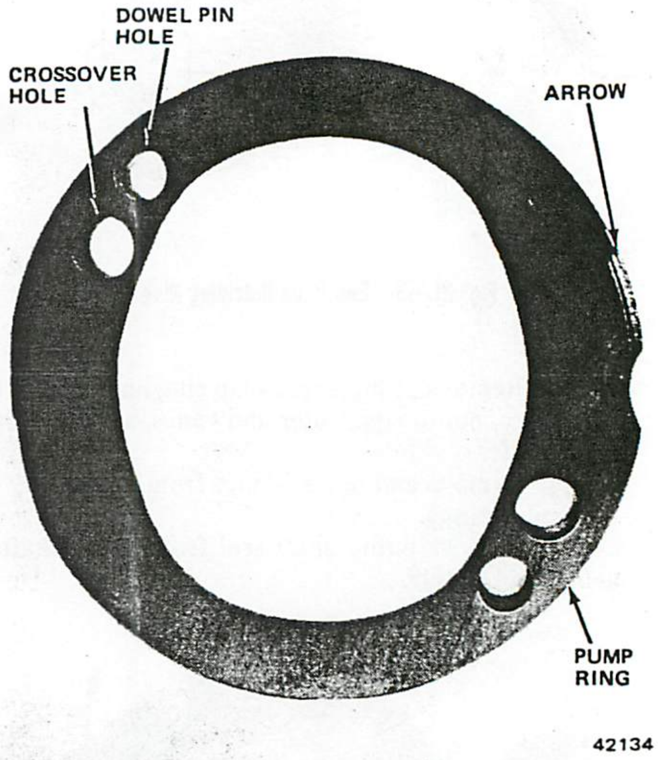

Fig. 2L-57 Pump Ring Dowel Hole Locations

(8) Install pump ring on dowel pins and over rotor and thrust plate. Pump rotation arrow on pump ring must face upward when ring is installed (fig. 2L-58). Do not displace end plate O-ring during ring installation.

(9) Install rotor vanes in rotor slots (fig. 2L-59). Rounded edges of vanes must face outward.

(10) Lubricate pressure plate outside diameter and chamfered surface with petroleum jelly.

(11) Install pressure plate on thrust plate dowel pins. Spring groove in plate must face upward when installed (fig. 2L-56).

(12) Seat pressure plate using large socket. Position socket on plate and press downward approximately 1/16 inch (1.58 mm) to seat plate.

(13) Lubricate remaining end plate O-ring seal with petroleum jelly and install O-ring in second (center) groove in pump body bore (fig. 2L-55).

(14) Install pressure plate spring on pressure plate. Be sure spring is seated in plate spring groove (fig. 2L-56).

(15) Lubricate end plate outside diameter with petroleum jelly and install plate in pump body bore.

(16) Press end plate downward and install end plate retaining ring (fig. 2L-60).

Fig. 2L-58 Pump Ring Installation

Fig. 2L-59 Rotor Vane Installation

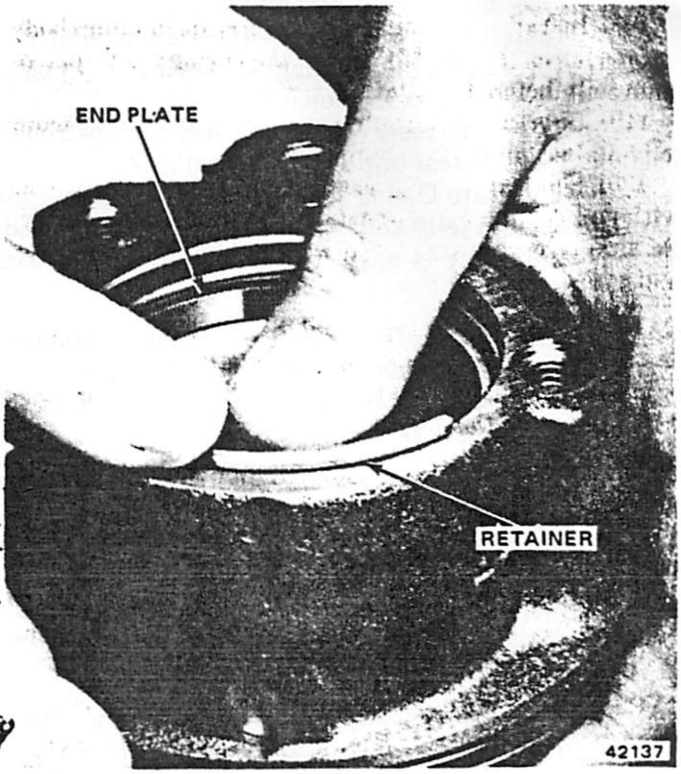

Fig. 2L-60 End Plate and Retaining Ring Installation

(17) Insert hex-end of flow control valve in valve spring and install assembled valve and spring in pump body valve bore (fig. 2L-61). Install assembly in valve spring-end first.

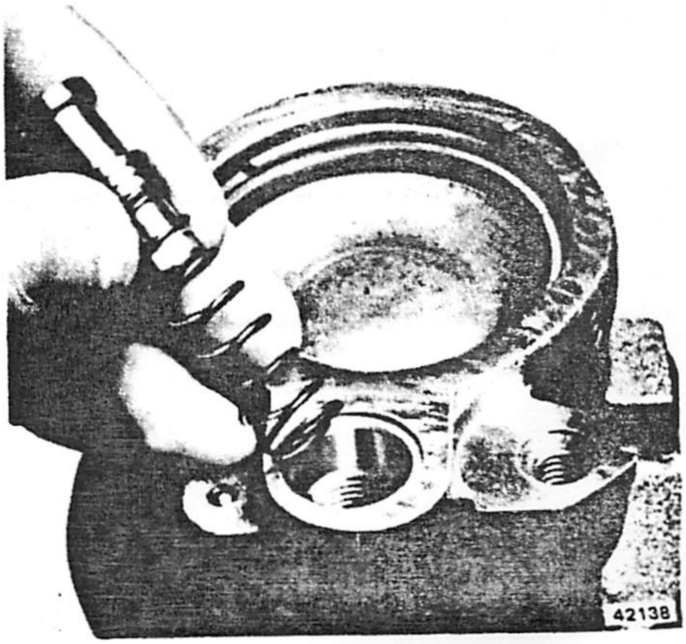

Fig. 2L-61 Flow Control Valve and Spring Installation

(18) Install mounting stud O-ring seals in pump body counterbores (fig. 2L-55). Lubricate O-rings with petroleum jelly before installation.

(19) Lubricate reservoir O-ring seal with petroleum jelly and install seal in pump body seal groove.

(20) Lubricate O-ring seal surface of pump reservoir with petroleum jelly and install reservoir on pump body. Be sure reservoir is aligned with mounting stud bores and seals.

CAUTION: *Be careful to avoid displacing or damaging any of the O-ring seals during installation. Use a wood or plastic tool to keep the reservoir seal in its seal groove when installing the reservoir.*

(21) Install mounting studs. Tighten studs to 35 foot-pounds (47 N•m) torque.

(22) Lubricate pump union fitting O-ring with petroleum jelly and install O-ring on fitting.

(23) Install pump union fitting in flow control valve bore and tighten fitting to 35 foot-pounds (47 N•m) torque.

CAUTION: *Some pump units have metric thread union fittings which are designed for use with metric hose fittings that use an O-ring seal (fig. 2L-7, View B). If the union is to be replaced, be sure to install the correct thread-type fitting.*

(24) Install pump pulley using Tool J-25033 (fig. 2L-49).

(25) Install pump. Refer to Pump Installation.

(26) Fill pump reservoir and bleed air from system. Refer to Fluid Level and Initial Operation.

SPECIFICATIONS

Power Steering Pump Specifications

Pump Type	Vane-type, constant displacement, belt-driven hydraulic pump.
Capacity at 465 RPM	1.25 GPM
Flow Range	1.25 to 2.15 GPM
Relief Valve Setting (Maximum Pressure):	
CJ-Scrambler	1100-1200 psi (7584-8274 kPa)
Cke-Wag-Trk	1400-1500 psi (9653-10342 kPa)
Pressure Test Specifications:	
Initial pressure (engine at idle speed)	80-125 psi (552-862 kPa)
Test pressures (gauge valve closed)	Pressures must be within maximum pressure specifications and not vary by more than 50 psi (345 kPa)
Turning	400 psi (2758 kPa)
Fluids	Use Jeep Power Steering Fluid or equivalent only. Do not use transmission fluid. Use fluids designed for power steering system use only.

80502

Drive Belt Tension Specifications

	USA (pounds)		Metric (N)	
	New Belt*	USA (ft-lbs)	New Belt*	Used Belt
Air Conditioner, Six-Cylinder	125-155	90-115	556-689	400-512
Air Conditioner, Eight-Cylinder	125-155	90-115	556-689	400-512
Air Pump (All except Six-Cylinder w/AC)	125-155	90-115	556-689	400-512
Air Pump Six-Cylinder w/AC (3/8 inch belt)	65-75	60-70	291-334	267-311
Fan	125-155	90-115	556-689	400-512
Idler Pulley	125-155	90-115	556-689	400-512
Power Steering Pump	125-155	90-115	556-689	400-512

*New belt specifications apply only to replacement belts. Once a belt has been tensioned and run, it is considered a used belt and should be adjusted to used belt specifications.

80503

Torque Specifications

Service Set-To Torques should be used when assembling components. Service In-Use Recheck Torques should be used for checking a pre-tightened item.

	USA (ft. lbs.)		Metric (N·m)	
	Service Set-To Torque	Service In-Use Recheck Torque	Service Set-To Torque	Service In-Use Recheck Torque
Hose Fittings	30	25-35	41	34-47
Pump Adjusting Bolts-Nuts	35	30-40	47	41-54
Pump Mounting Bracket Bolts	35	30-40	47	41-54
Pump Mounting Studs	35	30-40	47	41-54
Pump Union Fitting	35	30-40	47	41-54

All torque values given in foot-pounds and newton-meters with dry fits unless otherwise specified.

Tools


J-4245
SNAP-RING PLIERS
J-21553
PITMAN SHAFT SEAL
INSTALLER
J-21552
RACK-PISTON ARBOR
J-6222
ADJUSTER PLUG
SEAL PROTECTOR
J-21554
ADJUSTER PLUG
SEAL
INSTALLER
J-6221
ADJUSTER PLUG
BEARING REMOVER
AND INSTALLER
J-6217
CONNECTOR
SEAT INSTALLER
J-8092
HANDLE
J-7754
TORQUE WRENCH
(0-25 INCH POUNDS)
J-21551
PITMAN SHAFT
BEARING REMOVER
AND INSTALLER
J-6632
PITMAN ARM
PULLER
J-7624
SPANNER
WRENCH
80501

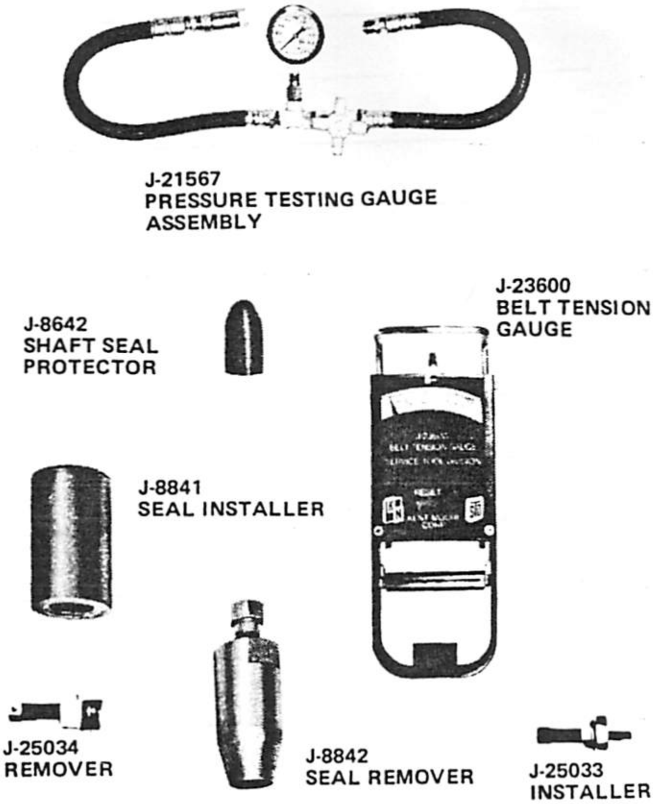
J-21567
PRESSURE TESTING GAUGE
ASSEMBLY
J-23600
BELT TENSION
GAUGE
J-8642
SHAFT SEAL
PROTECTOR
J-8841
SEAL INSTALLER
J-25034
REMOVER
J-8842
SEAL REMOVER
J-25033
INSTALLER

70356

NOTES

STEERING LINKAGE 2M

INDEX

GENERAL

The steering linkage consists of a steering gear pitman arm, a connecting rod, a tie rod, a steering damper, and an integral steering arm and steering knuckle. Ball ends and adjusting tubes are used on the tie rod and connecting rod for toe-in adjustment and steering wheel alignment (figs. 2M-1 and 2M-2).

The connecting rod is attached to the pitman arm at one end and to the tie rod at the opposite end. The tie rod ends are connected to the steering knuckle arms. The steering damper is attached to the tie rod on one end and to a bracket on the left spring tie plate at the opposite end.

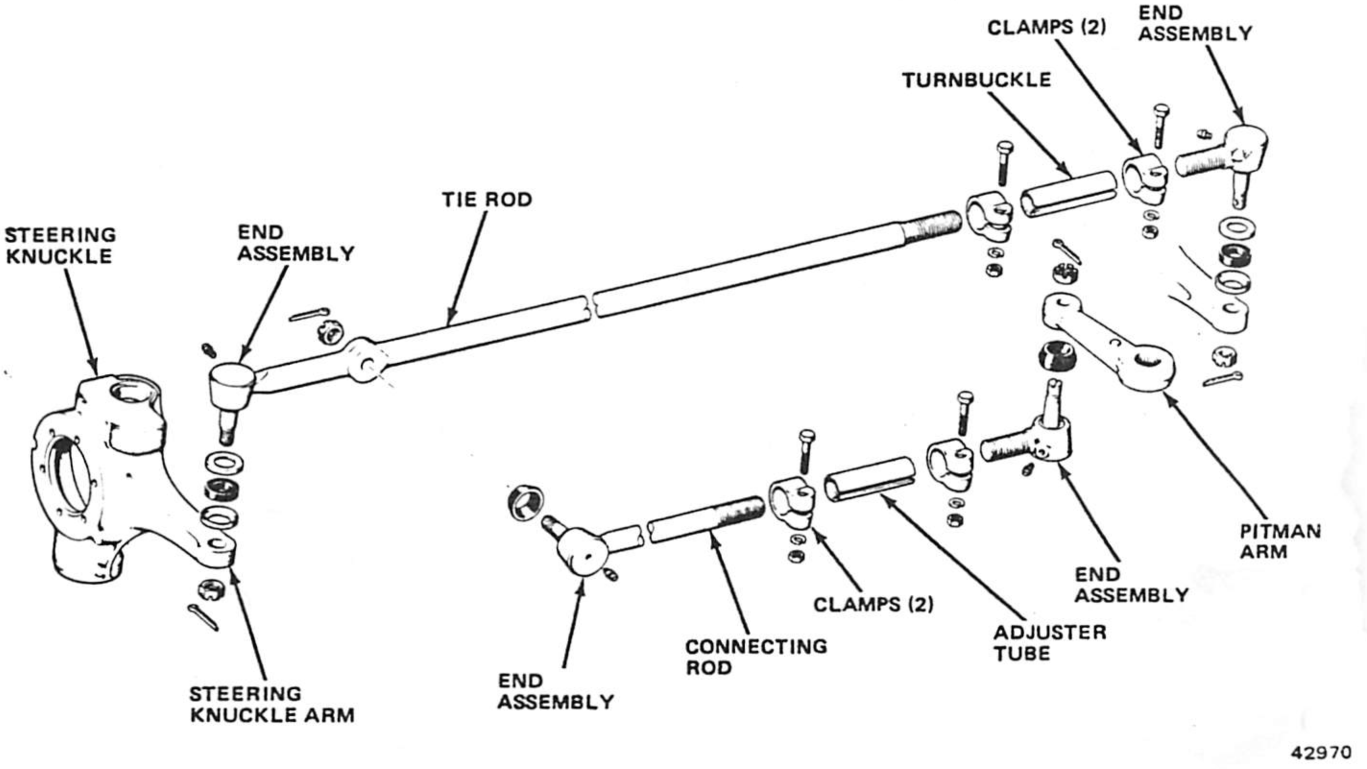

Fig. 2M-1 Steering Linkage—Cherokee-Wagoneer-Truck Models

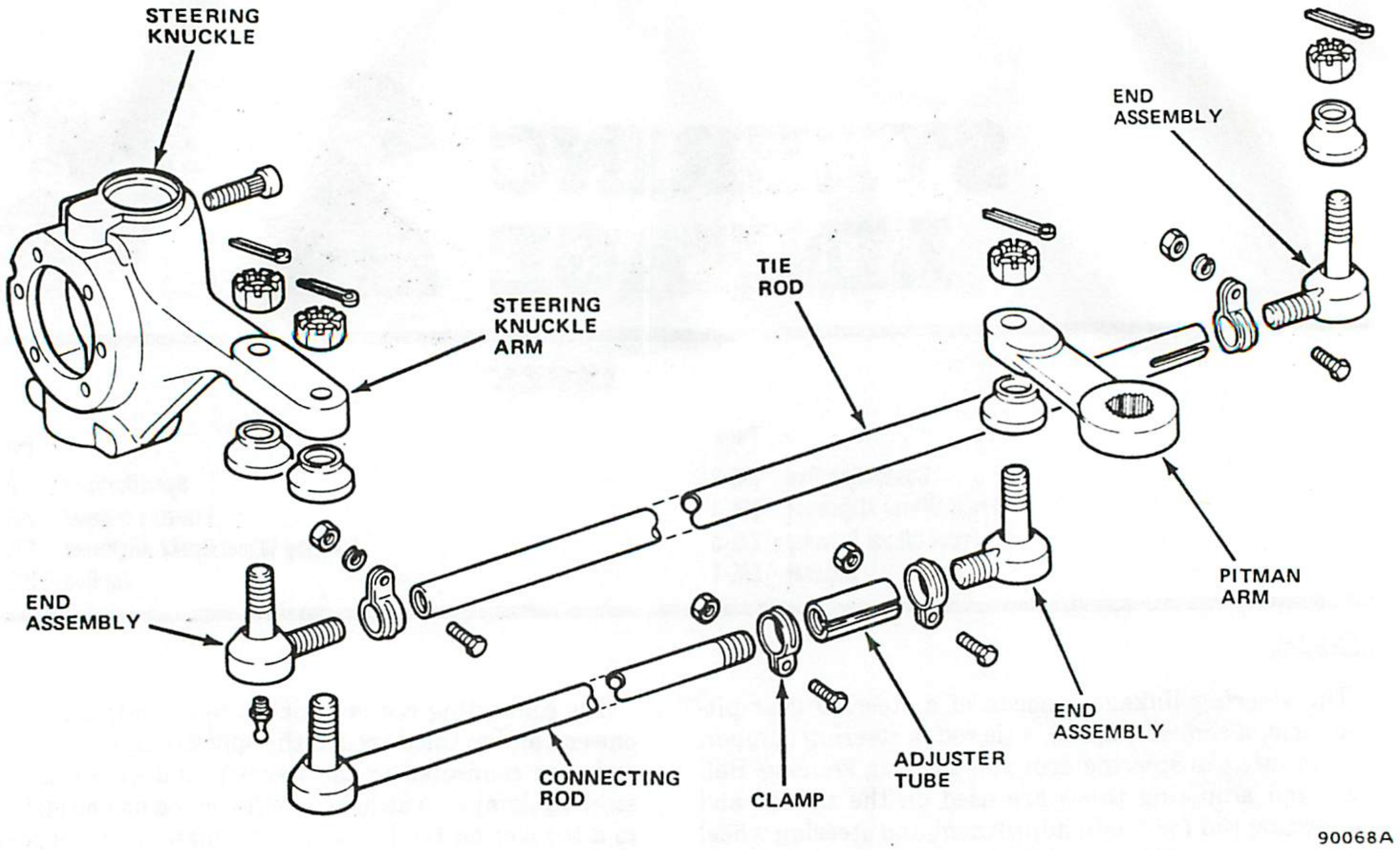

Fig. 2M-2 Steering Linkage—CJ and Scrambler Models

On Cherokee, Wagoneer and Truck models, the tie rod (fig. 2M-3) consists of a solid rod that is threaded on one end and has a ball end assembly at the opposite end. An adjusting tube and removable ball end complete the tie rod assembly. The tie rod threaded end has right-hand threads to accept the adjuster tube. On CJ models, the tie rod has ball ends and adjusting tubes at both ends. The ball end that connects to the tie rod is threaded into the adjusting tube. The tie rod has a large boss located about eight inches from the unthreaded end. A tapered hole machined in this boss accepts the connecting rod end. The steering damper is connected to a bracket clamped to the center of the tie rod.

The connecting rod (fig. 2M-4) is threaded on one end and has a ball-end assembly at the opposite end. An adjusting tube and removable ball end complete the connecting rod assembly. On Cherokee, Wagoneer and Truck models, the end having the integral ball end assembly is connected to the tie rod. On CJ models, it is attached to the right hand steering arm. The threaded end, with the adjusting tube and removable ball end, is attached to the pitman arm.

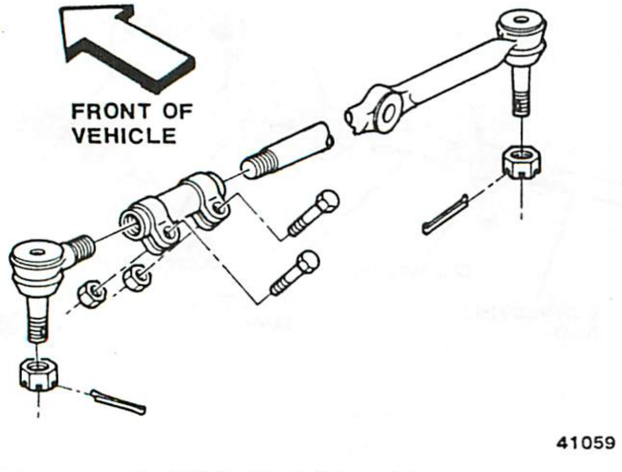

Fig. 2M-3 Tie Rod Assembly

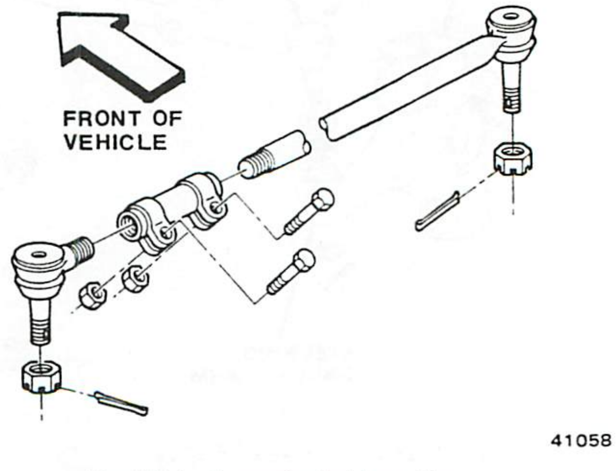

Fig. 2M-4 Connecting Rod Assembly

TIE ROD

Removal

(1) Remove cotter pins and retaining nuts at both ends of tie rod and from end of connecting rod where it attaches to the tie rod.

(2) Remove nut attaching steering damper push rod to tie rod bracket and move damper aside.

(3) Remove tie rod ends from steering arms and connecting rod using puller.

NOTE: *After removal, the tie rod ends can be removed by loosening the adjusting tube clamp bolts and unthreading the ends.*

Installation

(1) Attach tie rod ends to steering arms. Tighten nuts to 50 foot-pounds (68 N•m) torque and install replacement cotter pins.

(2) Attach connecting rod to tie rod. Tighten nut to 60 foot-pounds (81 N•m) torque on CJ models and 70 foot-pounds (95 N•m) torque on Cherokee, Wagoneer and Truck. Install replacement cotter pin in retaining nut.

(3) Attach steering damper to tie rod bracket.

(4) Adjust toe-in as necessary.

CONNECTING ROD

The steering connecting rod can be removed by removing the cotter pins and nuts from both ball ends and removing the rod. The steering connecting rod ball stud ends cannot be disassembled for service.

When installing the steering connecting rod, place the wheels in the straight-ahead position and place the steering arm parallel to the centerline of the vehicle. The steering gear pitman arm must be indexed with the alignment marks on the pitman arm and steering gear shaft and the steering gear must be centered. When the steering arm is correctly positioned, install the connecting rod.

STEERING DAMPER

The steering damper used on Cherokee, Wagoneer and Truck models has mounting eyelets at each end (fig. 2M-5). The damper used on CJ models has a mounting eyelet at the body end only as the push rod is threaded to accept a mounting bracket retaining nut (fig. 2M-6). The body end of the damper attaches to a stud on a bracket mounted between the left axle spring and axle spring pad. The push rod end is attached to a bracket that is clamped to the tie rod.

The steering damper is serviced as an assembly only. If damaged or leaking, replace the damper. However, the rubber mounting bushings used in the damper eyelets or on the push rod can be replaced individually if necessary.

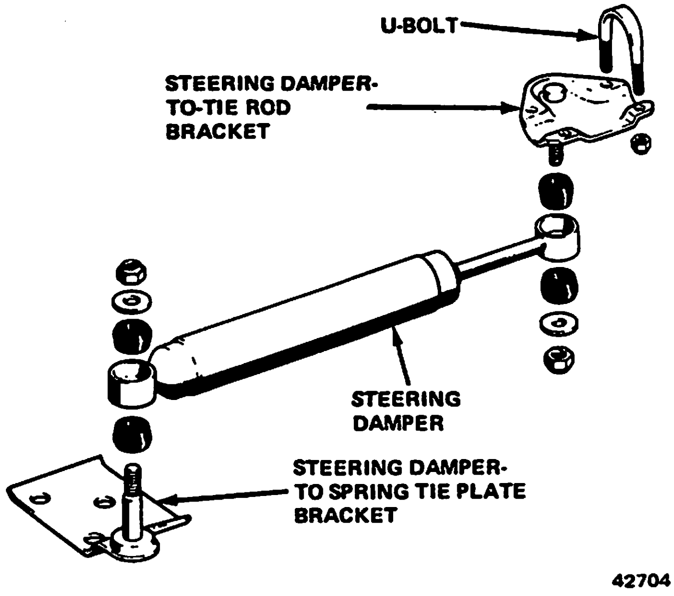

Fig. 2M-5 Steering Damper—Cherokee-Wagoneer-Truck Models

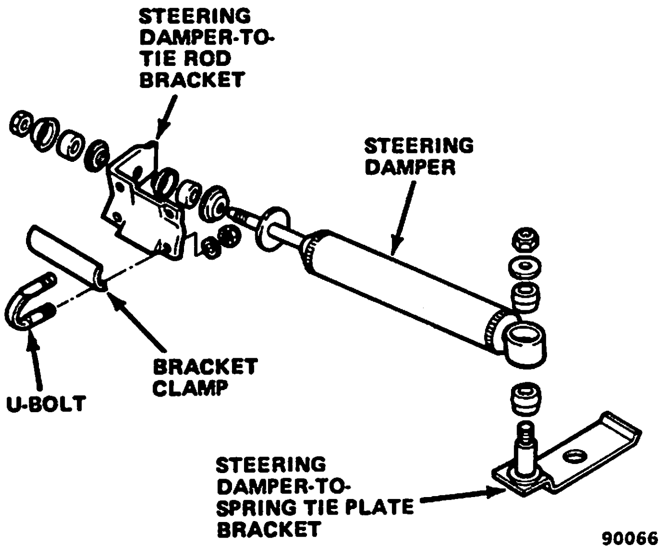

Fig. 2M-6 Steering Damper—CJ Models

Removal

(1) Place front wheels in straight-ahead position.

(2) Remove locknut attaching damper to tie plate bracket and lift damper off stud.

(3) Remove locknut attaching push rod end to tie rod bracket and remove damper assembly.

Installation

(1) Insert rubber bushings in damper eyelets or on push rod.

(2) Position push rod on tie rod bracket stud and install attaching parts.

(3) Install rubber bushings in damper body mounting eyelet.

(4) Extend damper piston rod (by pulling back on damper body) and install mounting eyelet on tie plate bracket stud.

(5) Install and tighten all locknuts securely.

FRONT WHEEL ALIGNMENT

Alignment should be checked and adjusted using an alignment rack. To ensure correct alignment, the following inspection is recommended.

(1) Equalize tire pressures and place vehicle on level surface.

(2) Check steering gear-to-steering column alignment.

(3) Inspect steering knuckle pivots, spindle, and wheel bearings for looseness.

(4) Check for spring sag.

(5) Check brakes and shock absorbers for proper operation.

(6) Check steering gear adjustment.

(7) Check front and rear wheel tracking.

(8) Check for broken spring center bolts.

NOTE: *Be sure all front suspension and steering system nuts and bolts are tight before checking wheel alignment.*

(9) Check caster, camber and toe-in.

Toe-In

Refer to figure 2M-7. The use of an alignment rack to measure toe-in is recommended.

The distance between the rear of the tires should be greater than at the front by 3/64 to 3/32 inch (1.19 to 2.38 mm).

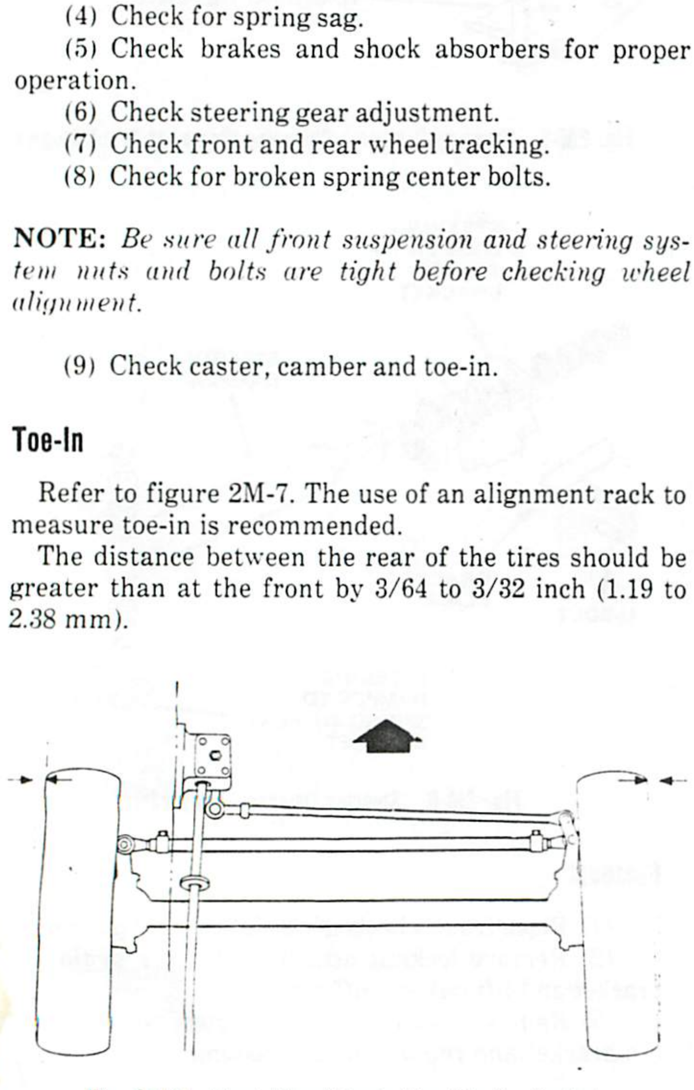

Fig. 2M-7 Front Wheel Toe-In (Top View)—Typical

To adjust toe-in, loosen the adjuster tube clamp bolts and turn the tie rod in or out with a small pipe wrench. The tie rod has both right- and left-hand threads to provide equal adjustment at each wheel. After adjustment, tighten the clamp bolts to specified torque.

Camber

Refer to figure 2M-8. Correct wheel camber is preset at 0° for all models. Camber cannot be altered by adjustment. It is important that camber be the same on both front wheels. Camber angle should be checked using wheel alignment equipment.

CAUTION: *Do not attempt to adjust the camber angle by heating or bending the axle or any suspension components. If camber is incorrect, the component(s) causing an incorrect camber angle should be replaced.*

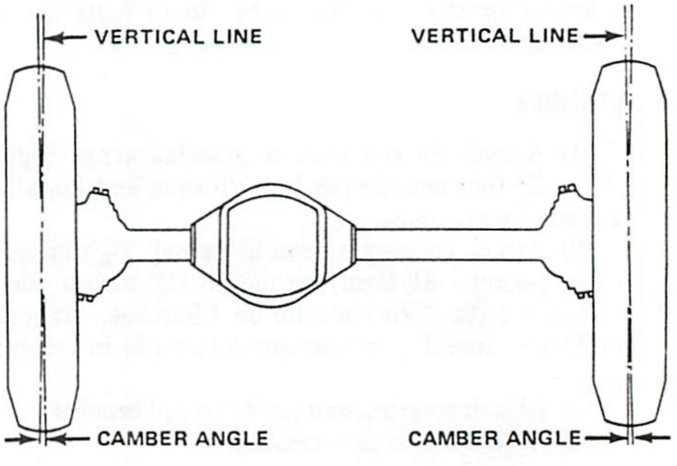

Fig. 2M-8 Front Wheel Camber

Caster

Refer to figure 2M-9. Axle caster is preset at + 6° for CJ models and + 4° for Cherokee, Wagoneer and Truck models. Caster should be checked using wheel alignment equipment. If caster is incorrect, adjustment can be made by installing tapered shims between the axle pad and suspension springs.

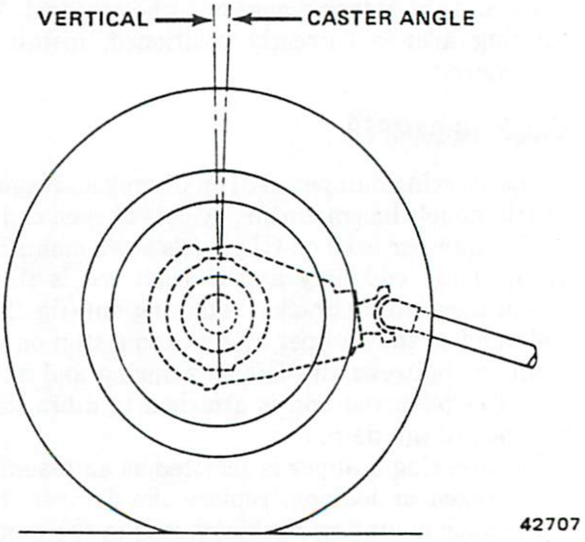

Fig. 2M-9 Front Wheel Caster

If caster is correct and the axle is not bent or twisted, a satisfactory check may be made by road testing the vehicle and checking steering wheel return.

Before road testing, check and correct tire inflation pressures. Be particularly careful to inflate both front tires to exactly the same pressure.

During the road test, turn the steering wheel from side-to-side and make turns to both the left and right. If the vehicle turns easily to the either side and the steering wheel returns toward center unassisted, caster is correct. However, if the vehicle turns to either side easily but the steering wheel does not return toward center unassisted, incorrect caster is indicated.

STEERING WHEEL SPOKE ALIGNMENT

After checking and adjusting front wheel alignment, align the steering wheel spokes as follows:

(1) Turn steering wheel until spokes are in centered position and clamp steering wheel in place.

(2) Loosen connecting rod adjusting tube clamps and turn tube until front wheels are in straight-ahead position.

(3) Tighten adjusting tube clamps.

(4) Road test and check steering wheel alignment.

FRONT WHEEL SHIMMY

Front wheel shimmy can be caused by one or more of the following conditions:

- Loose front wheel bearings
- Worn, unbalanced, or out-of-round front tires
- Loose steering damper bracket
- Steering damper malfunction
- Worn or loose tie rod ends
- Worn, loose, or incorrectly preloaded steering knuckle ball studs
- Incorrect tire inflation pressures

The following procedure outlines a method for determining and correcting the causes of wheel shimmy:

(1) Raise vehicle front end.

(2) Inspect front tire condition and check and correct inflation pressures. Check tires for evidence of unbalance such as cupping, scalloping, flat spots, or bald spots. Balance or replace tires exhibiting these conditions.

(3) Check and correct front wheel bearing adjustment, if necessary. Refer to Chapter 2H for procedure.

(4) Inspect steering damper mounting brackets or retaining nuts for being loose. If loose, tighten nuts or center bracket on tie rod and tighten attaching bolts.

(5) Check steering damper operation. Disconnect damper at tie rod bracket and alternately compress and extend damper piston fully. Piston action should be smooth and uniform throughout each stroke. Higher resistance on extension stroke than compression stroke is normal condition. Replace damper if lack of resistance is evident.

(6) Inspect tie rod ends. Replace any tie rod end that exhibits excessive play.

(7) Inspect steering knuckle ball studs. Insert pry bar between knuckle and yoke, adjacent to ball stud, and pry against each stud. If studs do not move or appear to be loose in stud socket, proceed to next step. If any stud moves or appears loose, reseat both studs in that side of axle as follows:

(a) Remove wheels and axle shafts.

(b) Loosen lower ball stud jamnut and remove cotter pin and slotted nut from upper ball stud.

(c) Unseat both ball studs by striking them with lead hammer and remove upper ball stud split ring seat using tool J-25158. Discard seat after removal.

(d) Remove lower ball stud jamnut and remove steering knuckle. Discard jamnut after removal.

(e) Clean split ring seat threads and lower stud taper in steering knuckle. Clean threads and tapered surfaces of both ball studs and clean threads in upper ball stud retaining nut.

(f) Position knuckle on axle yoke and install replacement lower ball stud jamnut finger-tight (only).

(g) Install and tighten upper ball stud slotted nut to 10-20 foot-pounds (13-27 N•m) torque to draw lower ball stud into tapered hole in axle yoke. Do not install upper ball stud split ring seat at this time.

(h) Tighten replacement lower ball stud jamnut to 80 foot-pounds (108 N•m) torque.

(i) Remove upper ball stud slotted nut and install replacement split ring seat using Tool J-25158. Tighten seat to 50 foot-pounds (68 N•m) torque. Install and tighten upper ball stud slotted nut to 100 foot-pounds (136 N•m) torque. Align and install cotter pin without loosening slotted nut.

(j) Loosely install axle shafts and steering spindles and measure turning effort of each steering knuckle. Refer to Ball Stud Preload Measurement in Chapter 2F—Axles. If turning effort is less than 10 foot-pounds (14 N•m) torque, proceed to next substep. If turning effort is more than 10 foot-pounds (14 N•m) torque, replace upper and lower ball studs and repeat Ball Stud Preload Correction procedure in Chapter 2F—Axles.

(k) Install axle shafts and repeat procedure outlined in step (7).

(l) Install wheels and lower vehicle.

(8) On CJ models not equipped with steering damper, install steering damper kit if steering components are OK.

(9) Lower vehicle.

(10) Road test vehicle to verify effectiveness of repairs.

SPECIFICATIONS

Torque Specifications

Service Set-To Torques should be used when assembling components. Service In-Use Recheck Torques should be used for checking a pre-tightened item.

	USA (ft. lbs.)		Metric (N·m)	
	Service Set-To Torque	Service In-Use Recheck Torque	Service Set-To Torque	Service In-Use Recheck Torque
Connecting Rod Clamp Bolt — CJ-Scrambler	12	10-15	16	14-20
Connecting Rod Clamp Bolts — Cke, Wag, Trk	30	25-35	41	34-47
Connecting Rod End-to-Tie Rod Nut (5/8-18)	70 minimum		95 minimum	
Connecting Rod End-to-Pitman Arm Nut (9/16-18)	60 minimum		81 minimum	
Pitman Arm to Pitman Shaft Nut	185	160-210	251	217-285
Steering Damper Locknuts — Cke, Wag, Trk	30	24-36	41	33-49
Steering Damper Bracket U-Bolts — CJ-Scrambler	12	8-15	16	11-20
Steering Damper Locknut (3/8-24) CJ-Scrambler	22	16-28	30	22-38
Steering Damper Locknut (7/16-20) CJ-Scrambler	30	24-36	41	33-49
Upper Ball Stud Retaining Nut	100	—	136	—
Lower Ball Stud Jamnut	80	—	108	—
Upper Ball Stud Split Ring Seat	50	—	68	—
Tie Rod Clamp Bolt (5/16-24) CJ-Scrambler	12	10-15	16	14-20
Tie Rod Clamp Bolt (7/16-14) Cke, Wag, Trk	30	25-35	41	34-47
Tie Rod Stud Nuts — CJ-Scrambler	40 minimum		54 minimum	
Tie Rod Stud Nuts — Cke, Wag, Trk	60 minimum		81 minimum	
Wheel Nuts — CJ-Scrambler	75	65-90	102	88-122
Wheel Nuts — Cke, Wag, J-10 Trk	75	65-80	102	88-108
Wheel Nuts — J-20 Trk	130	110-150	176	149-203

All torque values given in foot-pounds and newton-meters with dry fits unless otherwise specified.

***Tightened to castellated nut slot only. Do not loosen nut to obtain desired torque.**

90070

Front Wheel Alignment Specifications

Steering Axis Inclination	8-1/2°
Caster	
CJ-Scrambler	+6°(+1°)
Cherokee, Wagoneer, and Truck	+4°(+1°)
Camber	0°(+1/2°)
Toe-In	3/64 to 3/32-Inch (1.19 to 2.38 mm)
Turning Angle	
CJ-5	29°
CJ-7/Scrambler	32°
Cherokee, Wagoneer, and Truck	36° to 37°

80436

SUSPENSION 2N

INDEX

GENERAL

Jeep vehicles are equipped with semi-elliptic leaf springs and dual-action hydraulic shock absorbers at front and rear. A front axle stabilizer bar is standard on Cherokee, Wagoneer, Truck models and CJ and Scrambler models with the molded hard top. A front stabilizer bar is optional on all other CJ and Scrambler models.

Front and rear suspension springs are mounted parallel to the frame side rails. The forward end of the front springs and the rear end of the rear springs are attached to the frame by pivoting shackles. The opposite spring ends are attached to the frame by fixed pivot bolts. All spring ends have silent-block type rubber bushings which do not require lubrication.

The front springs are mounted below the axle on all Jeep vehicles. CJ and Scrambler models use multi-leaf front springs (fig. 2N-1). Cherokee, Wagoneer, and Truck models use tapered-leaf or multi-leaf front springs (fig. 2N-2).

The multi-leaf rear springs used on CJ and Scrambler models are mounted below the axle (fig. 2N-3).

The rear springs used on Cherokee, Wagoneer, and Truck models are either multi-leaf or tapered-leaf springs and are mounted above the axle (figs. 2N-4 and 2N-5).

The leaf springs on all Jeep models are attached to the axle by U-bolts and tie plates and are positioned on the axle by spring saddles welded to the axle tubes. Spring center bolts and spring clips are used to align and hold the spring leaves in position. If the vehicle is used for severe, off-road operation, the springs should be examined periodically for broken or shifted leaves, loose or missing clips, and broken center bolts.

Squeaking noises can be generated when movement between the spring bushings and metal parts occurs. This noise can usually be eliminated by tightening the spring attaching bolts to the specified torque. How
if squeak noises persist after bolt tightening, check
bushing that is loose in the spring eye, or misali
(not centered in spring eye), or spring misalign
caused by damaged suspension components. Repa
necessary if any of these conditions are discovered.

The spring eye bushings do not require any ty
lubrication. Do not attempt to eliminate bushing n
by lubricating them. Grease and mineral oil-base l
cants can cause deterioration of the bushing rubber

SUSPENSION JOUNCE AND WINDUP BUMPERS

A front axle windup bumper is used on CJ and Sc
bler models only. The bumper consists of a star
bracket with a rubber bumper attached to it (fig. 2
The bracket is attached to the inner side of the
frame rail adjacent to and just above the front
housing. During severe operation when extreme s
movement and front axle travel occurs, the bumper
tacts a pad on the front axle housing to prevent e
sive housing movement.

All models are equipped with frame-mounted jo
bumpers located at the front and rear of the ve
suspension. The bumpers are attached to the unde
of the frame rails and are positioned over and in
with the axle tubes.

SHOCK ABSORBERS

The hydraulic, dual-action shock absorbers use
Jeep vehicles are designed to control suspension s
movement. The shock absorber upper ends are atta
to brackets located on the frame rails. The lower
are attached to the spring tie plate or axle tube. Ru
bushings are installed in the shock mounting ey
damp out road shock and noise.

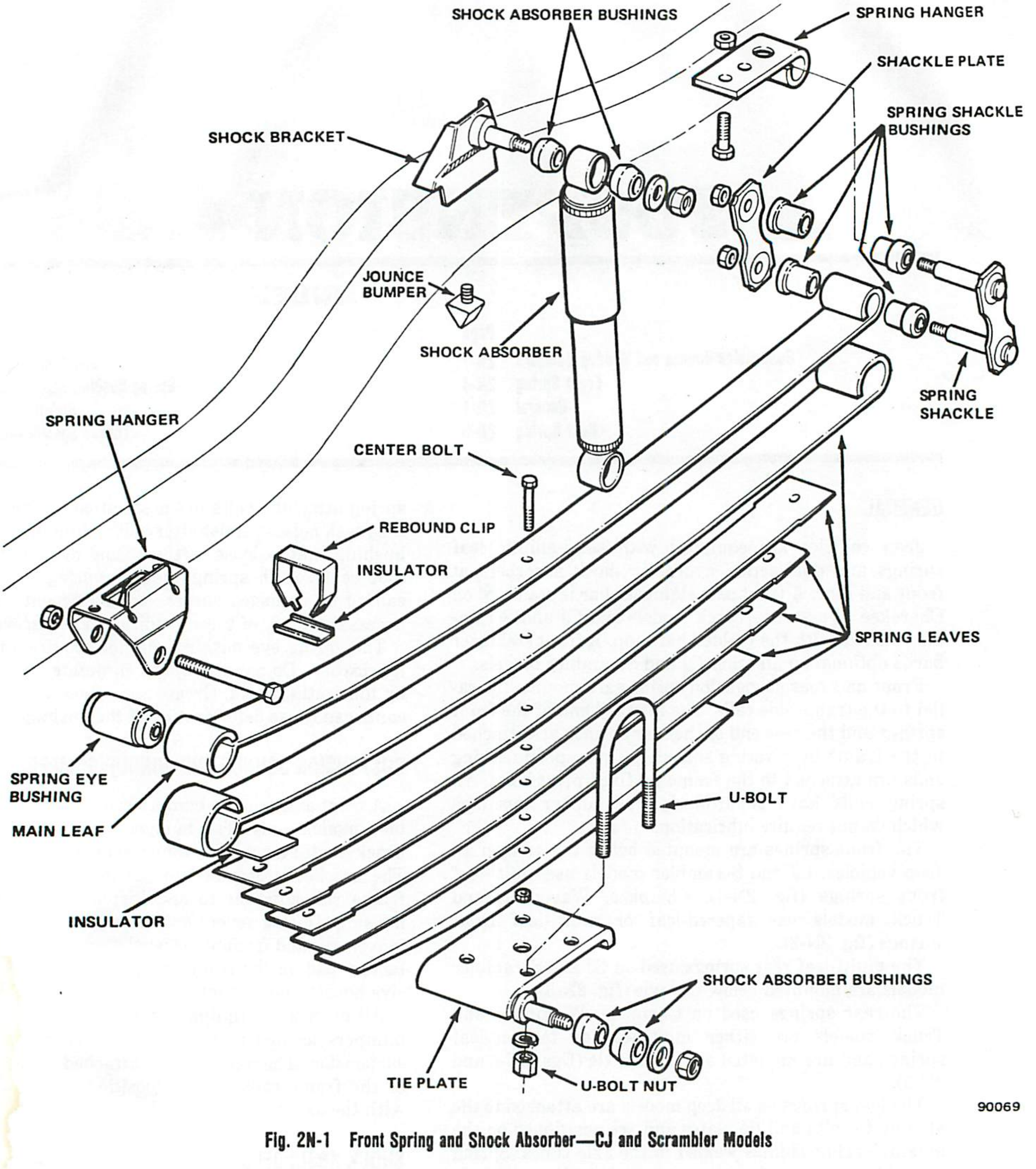

Fig. 2N-1 Front Spring and Shock Absorber—CJ and Scrambler Models

Dual front shock absorbers are available as an option on Cherokee and J-10 Truck models. The internal valving of these shock absorbers is designed to increase the damping forces needed to cushion the loads encountered in off-road operation.

Squeak noises from the shock bushings can be generated if movement between the bushings and metal parts occurs. This noise can usually be eliminated by tightening the shock mounting nuts. However, if squeak noises persist, check for damaged or worn bushings or

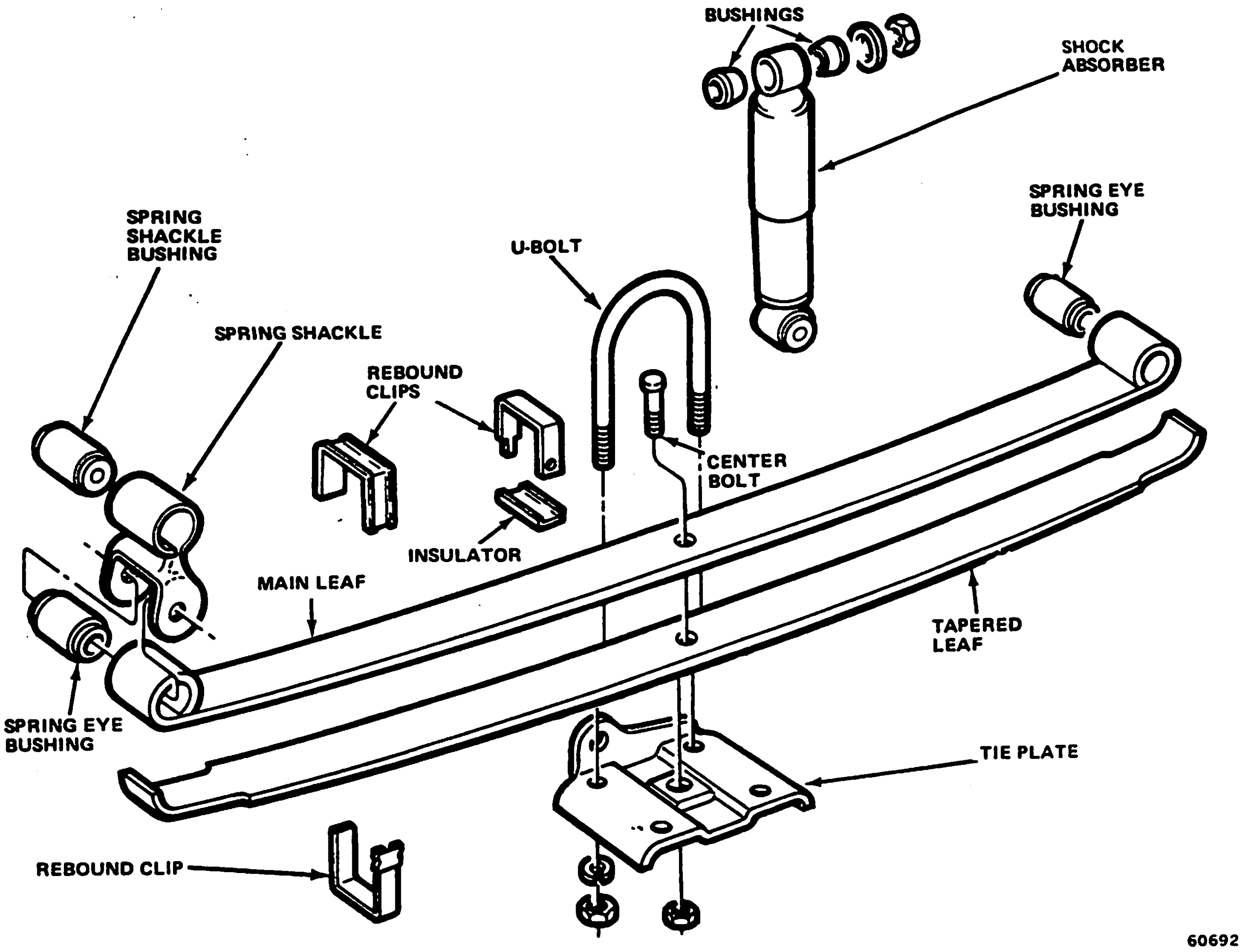

Fig. 2N-2 Front Spring and Shock Absorber—Cherokee-Wagoneer-Truck Models

damaged shock mounting components. Repair as necessary if any of these conditions are discovered.

The shock absorber bushings do not require any type of lubrication. Do not lubricate the bushings in an attempt to reduce bushing noises. Grease or mineral oil-base lubricants can cause deterioration of the bushing rubber.

The shock absorbers are not refillable or adjustable. If a malfunction occurs, the shock absorber must be replaced as an assembly. To test a unit, hold it in an upright position and work the shock piston up and down four or five times. Shock action throughout each stroke should be smooth and produce an equal amount of resistance in each direction.

Shock Absorber Replacement

(1) Raise vehicle.

(2) Position hydraulic jack under axle and raise axle to relieve springs of axle weight.

(3) Remove washers and locknuts attaching shock absorber to upper and lower mounting pins.

(4) Remove shock absorber and remove bushings from shock mounting eyes.

(5) Install replacement bushings in shock mounting eyes. Do not lubricate bushings, install them dry.

(6) Position replacement shock absorber on mounting pins.

(7) Install shock absorber attaching washers and locknuts. Tighten locknuts to specified torque.

(8) Lower vehicle and remove hydraulic jack.

STABILIZER BAR

The stabilizer bar extends across the front underside of the frame and is attached to the frame rails by clamps and rubber bushings (fig. 2N-7). The bar ends extend rearward to a position above the front springs and are connected to the axle and springs by connecting links (fig. 2N-8).

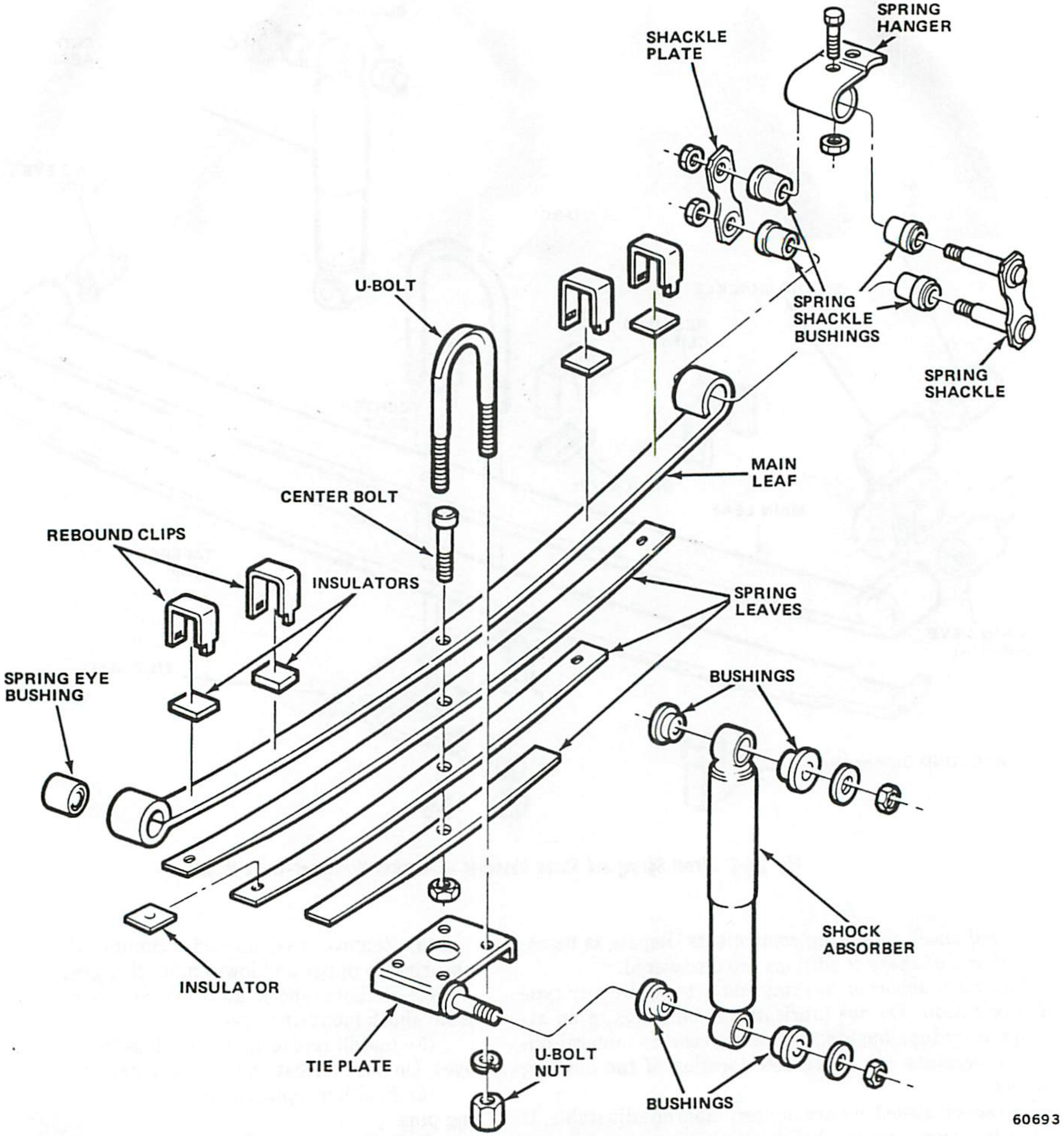

Fig. 2N-3 Rear Spring and Shock Absorber—CJ and Scrambler Models

FRONT SPRING

Removal

(1) Raise vehicle.

(2) Support vehicle using safety stands placed under frame rails.

(3) Position hydraulic jack under axle and raise axle to relieve springs of axle weight.

(4) Disconnect stabilizer bar, if equipped.

(5) Remove spring U-bolts and tie plates.

(6) Remove bolt attaching spring front eye to shackle.

(7) Remove bolt attaching spring rear eye to spring hanger.

(8) Remove spring.

NOTE: *The spring can be disassembled by removing the spring rebound clips and spring center bolt. If the spring bushings are to be removed, refer to Spring Bushing Replacement.*

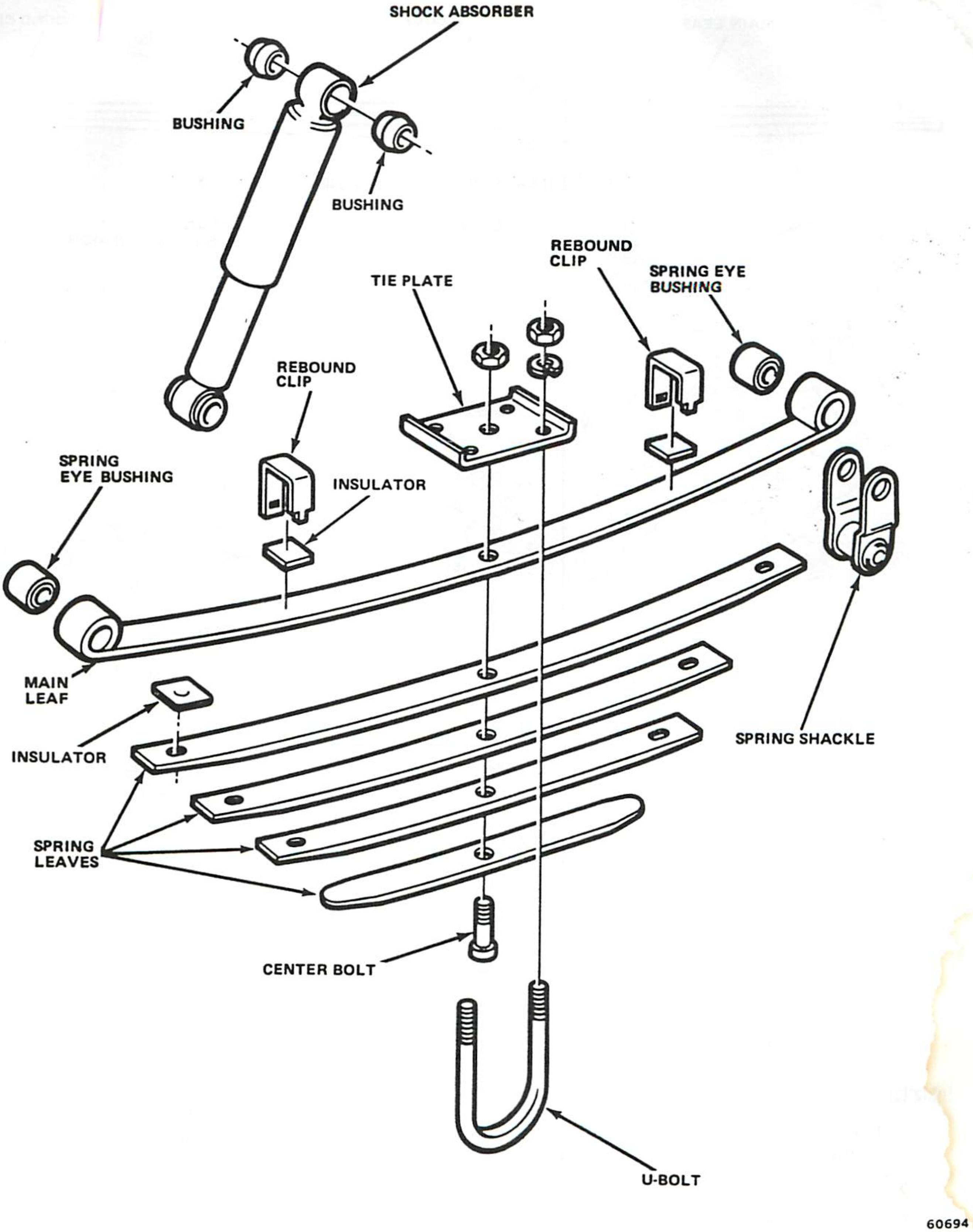

Fig. 2N-4 Rear Spring and Shock Absorber—Cherokee-Wagoneer-Truck Models

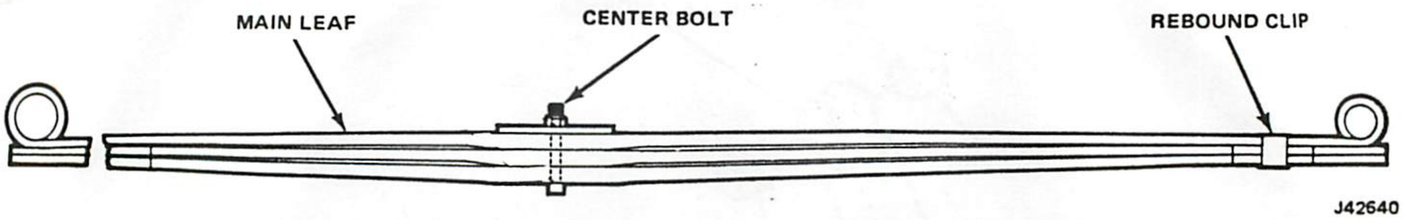

Fig. 2N-5 Tapered Rear Leaf Spring—Cherokee-Wagoneer-Truck Models (Typical)

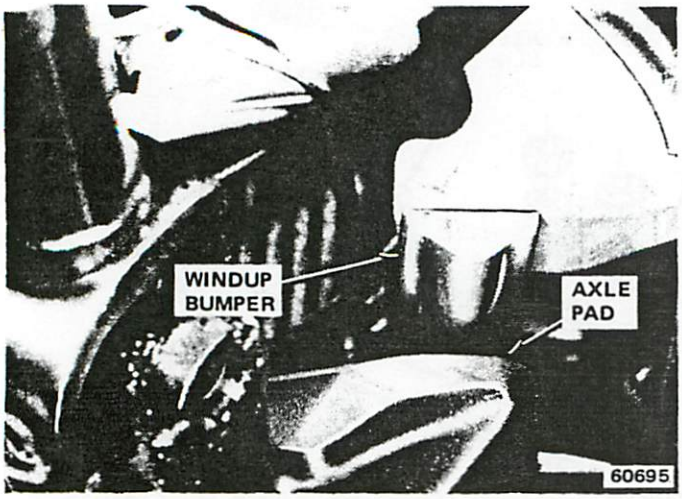

Fig. 2N-6 Front Axle Windup Bumper

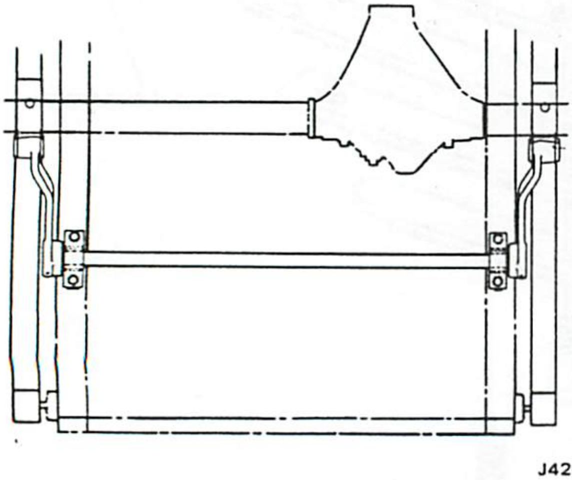

Fig. 2N-7 Stabilizer Bar Position

Installation

(1) Position spring rear eye in hanger bracket and loosely install attaching bolt and nut. Do not tighten bolt at this time.

(2) Position spring front eye in shackle and loosely install attaching bolt and nut. Do not tighten bolt at this time.

(3) Position axle on spring and install spring tie plate and U-bolts. Tighten U-bolt nuts to specified torque.

(4) Connect stabilizer bar, if equipped.

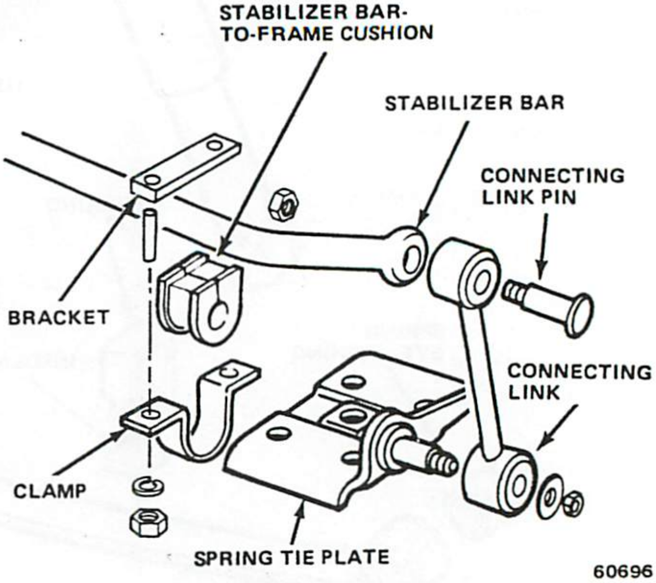

Fig. 2N-8 Stabilizer Bar Mounting

(5) Remove hydraulic jack used to support axle weight.

(6) Remove support stands and lower vehicle.

(7) Tighten spring front and rear attaching bolts and nuts to specified torque.

REAR SPRING

Spring Mounted Below Axle

Removal

(1) Raise vehicle.

(2) Support vehicle using safety stands placed under frame rails.

(3) Position hydraulic jack under axle and raise axle to relieve springs of axle weight.

(4) Remove tie plate U-bolts.

(5) Remove bolt attaching spring rear eye to shackle.

(6) Remove bolt attaching spring front eye to mounting bracket on frame.

(7) Remove spring.

NOTE: *The spring can be disassembled by removing the spring rebound clips and spring center bolt. If the spring bushings are to be removed, refer to Spring Bushing Replacement.*

Installation

(1) Position spring front eye in frame mounting bracket and loosely install attaching bolt and nut. Do not tighten bolt at this time.

(2) Position spring rear eye in shackle and loosely install attaching bolt and nut. Do not tighten bolt at this time.

(3) Install spring tie plate and U-bolts. Tighten U-bolt nuts to specified torque.

(4) Remove hydraulic jack used to support axle.

(5) Remove support stands and lower vehicle.

(6) Tighten spring eye mounting bolts and nuts tospecified torque.

Spring Mounted Above Axle

Removal

(1) Raise vehicle.

(2) Support vehicle using safety stands placed under frame rails.

(3) If left-side spring is to be serviced, remove fuel tank skid plate.

(4) Position hydraulic jack under axle and raise axle to relieve springs of axle weight.

(5) Disconnect shock absorber at axle.

(6) Remove wheel.

(7) Remove tie plate U-bolts and tie plate.

(8) Remove bolt attaching spring rear eye to spring shackle.

(9) Remove bolt attaching spring front eye to spring hanger on frame rail.

(10) Remove spring.

NOTE: *The spring can be disassembled by removing the spring rebound clips and center bolt. If the spring bushings are to be removed, refer to Spring Bushing Replacement.*

Installation

(1) Position spring front eye in spring hanger and loosely install attaching bolt and nut. Do not tighten bolt at this time.

(2) Position spring rear eye in shackle and loosely install attaching bolt and nut. Do not tighten nut at this time.

(3) Position axle on spring and install spring tie plate and U-bolts. Tighten U-bolt nuts to specified torque.

(4) Connect shock absorber to axle.

(5) Install wheel.

(6) Install fuel tank skid plate, if removed.

(7) Remove hydraulic jack.

(8) Remove support stands and lower vehicle.

(9) Tighten spring attaching bolts to specified torque.

SPRING BUSHING REPLACEMENT

Small Bushing

(1) Insert 3/8 by 8 inch (0.95 by 20.3 cm threaded rod halfway through bushing.

(2) Place suitable size socket on one end open end of socket toward bushing. Socket wi bushing driver.

NOTE: *The socket must be large enough in dia bear against the metal outer sleeve on the bush still be small enough to pass through the spring e*

(3) Install one flat washer and one hex nut o behind socket (fig. 2N-9).

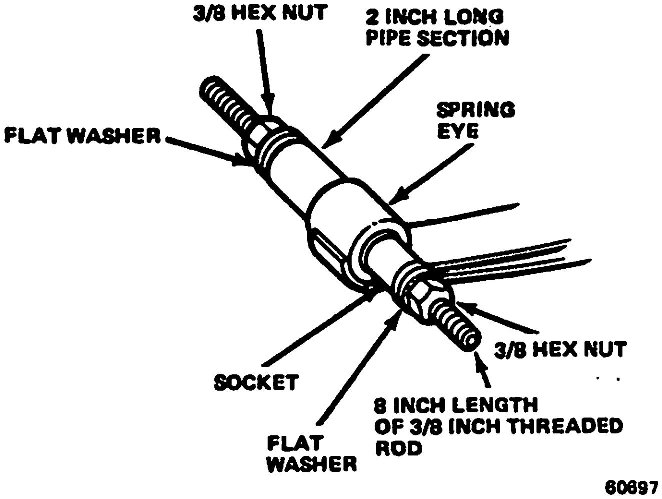

Fig. 2N-9 Bushing Replacement Tools—Small Bushing

(4) Install 2 inch (5.08 cm) long section of suitable size pipe on opposite end of threaded rod. Pipe will serve as bushing receiver.

NOTE: *The inside diameter of the pipe must be large enough to accommodate the bushing but still seat against the spring eye surface properly.*

(5) Install flat washer and hex nut on rod to secure pipe section. Be sure flat washer is large enough in diameter to support and maintain alignment of pipe section.

(6) Tighten both hex nuts finger-tight and align all components.

NOTE: *Be sure socket is positioned in the spring eye and aligns with the bushing. The pipe section must butt against the spring eye surface so the bushing can pass through it. The socket will act as a press ram and press the bushing out of the spring eye.*

(7) Tighten nut at socket end of rod until bushing is pressed out of spring eye.

(8) Remove bushing tools and old bushing.

(9) Install replacement bushing on threaded rod.

) Assemble and align bushing tools as outlined in ous steps.

1) Align bushing with spring eye and press bush- nto eye.

12) Loosen bushing tools and check bushing posi- ı. Bushing must be centered in spring eye. Ends of shing must be flush or slightly below side surfaces of ring eye.

(13) If bushing is not centered, reinstall bushing ools and correct bushing position as necessary.

Large Bushing

(1) Insert 1/2 by 11 inch (1.27 by 27.9 cm) length of threaded rod halfway through bushing.

(2) Install suitable size deep socket on one end of rod with open end of socket toward bushing. Socket will serve as bushing driver.

NOTE: *The socket must be large enough in diameter to bear against the metal outer sleeve on the bushing but still be small enough to pass through the spring eye.*

(3) Install one flat washer and one hex nut on rod behind socket (fig. 2N-10).

(4) Install 3 inch (7.62 cm) long section of suitable size pipe on opposite end of rod. Pipe will serve as bushing receiver.

NOTE: *The inside diameter of the pipe must be large enough to accommodate the bushing but still seat against the spring eye surface properly.*

(5) Install flat washer and one hex nut on rod behind pipe section. Be sure flat washer is large enough in diameter to support and maintain alignment of the pipe section.

(6) Tighten both nuts finger-tight and align all components.

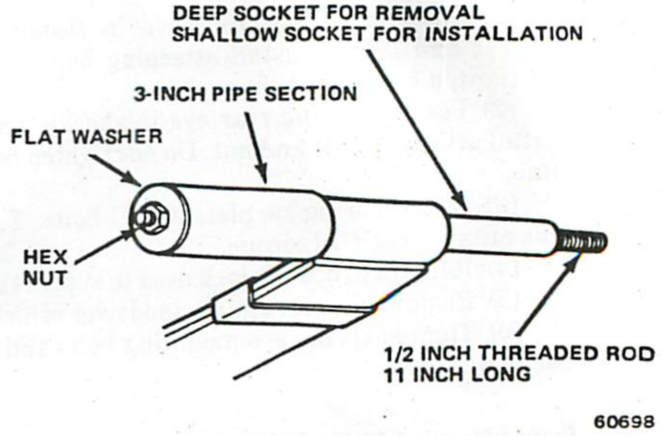

Fig. 2N-10 Bushing Replacement Tools—Large Bushing

NOTE: *Be sure the socket is positioned in the spring eye and aligns with the bushing. The pipe section must butt against the spring eye so that bushing can pass through it. The socket will act as a press ram and press the bushing out of the spring eye and into the section of pipe.*

(7) Tighten nut at socket and press bushing out of spring eye.

(8) Remove tools and old bushing.

(9) Install replacement bushing on threaded rod and assemble bushing tools as outlined in previous steps.

(10) Align bushing with spring eye and press bushing into eye.

(11) Loosen tools and check bushing position. Bushing must be centered in spring eye. Ends of bushing must be flush with or slightly below side surfaces of spring eye.

(12) If bushing is not centered, reinstall tools and correct bushing position as necessary.

SPECIFICATIONS

Torque Specifications

Service Set-To Torques should be used when assembling components. Service In-Use Recheck Torques should be used for checking a pre-tightened item.

	USA (ft. lbs.)		Metric (N·m)	
	Service Set-To Torque	Service In-Use Recheck Torque	Service Set-To Torque	Service In-Use Recheck Torque
Shock Absorber Upper Locknut (7/16-20)	35	25-40	47	34-54
Shock Aborber Lower Locknut (1/2-20)	•45	35-50	61	47-68
Spring Pivot Bolts (CJ)	100	80-120	136	108-163
Spring Shackle Nuts (CJ)	24	18-30	33	24-41
Spring U-Bolt Nuts (9/16-18)	100	85-105	136	115-142
Spring U-Bolt Nuts (1/2-20)	55	45-65	75	61-88
Spring Shackle and Pivot Bolts/Nuts (Cke-Wag-Trk)	100	80-120	136	108-163
Stabilizer Bar Mounting Bracket Bolts (All)	35	27-45	47	37-61
Wheel Nuts (CJ)	85	65-90	115	88-122
Wheel Nuts (Cke-Wag-J10 Trk)	85	65-90	115	88-122
Wheel Nuts (J20 Trk)	130	110-150	176	149-203
Spring Center Bolts	35	25-40	47	34-54
Stabilizer Bar Link Nuts	55	48-62	75	65-84

All torque values given in foot-pounds and newton-meters with dry fits unless otherwise specified.

60699