CHRYSLER CORPORATION

SERVICE MANUAL

1995 JEEP

To order the special service tools used and illustrated, please refer to the instructions on inside back cover.

CHRYSLER CORPORATION

NO PART OF THIS PUBLICATION MAY BE REPRODUCED, STORED IN A RETRIEVAL SYSTEM, OR TRANSMITTED, IN ANY FORM OR BY ANY MEANS, ELECTRONIC, MECHANICAL, PHOTOCOPYING, RECORDING, OR OTHERWISE, WITHOUT THE PRIOR WRITTEN PERMISSION OF CHRYSLER CORPORATION.

Chrysler Corporation reserves the right to make changes in design or to make additions to or improvements in its products without imposing any obligations upon itself to install them on its products previously manufactured.

Litho in U.S.A. Copyright © 1994 Chrysler Corporation 20M0694

Paper Content
50% Recycled

NEXT PAGE ▶

FOREWORD

The information contained in this service manual has been prepared for the professional automotive technician involved in daily repair operations. This manual does not cover theory of operation, which is addressed in service training material. Information describing the operation and use of standard and optional equipment is included in the Owner's Manual provided with the vehicle.

Information in this manual is divided into groups. These groups contain general information, diagnosis, testing, adjustments, removal, installation, disassembly, and assembly procedures for the components. To assist in locating a group title page, use the Group Tab Locator on the following page. The solid bar after the group title is aligned to a solid tab on the first page of each group. The first page of the group has a contents section that lists major topics within the group. If you are not sure which Group contains the information you need, look up the Component/System in the alphabetical index located in the rear of this manual.

A Service Manual Comment form is included at the rear of this manual. Use the form to provide Chrysler Corporation with your comments and suggestions.

Tightening torques are provided as a specific value throughout this manual. This value represents the midpoint of the acceptable engineering torque range for a given fastener application. These torque values are intended for use in service assembly and installation procedures using the correct OEM fasteners. When replacing fasteners, always use the same type (part number) fastener as removed.

Chrysler Corporation reserves the right to change testing procedures, specifications, diagnosis, repair methods, or vehicle wiring at any time without prior notice or incurring obligation.

NOTE: The acronyms, terminology and nomenclature used to identify emissions related components in this manual may have changed from prior publications. These new terms are in compliance with S.A.E. recommended practice J1930.

NEXT PAGE ▶

GROUP TAB LOCATOR

	Introduction
0	Lubrication and Maintenance
2	Front Suspension and Axle
3	Rear Suspension and Axles
5	Brakes
6	Clutch
7	Cooling System
8	Electrical
9	Engines
11	Exhaust System and Intake Manifold
13	Frame and Bumpers
14	Fuel System
16	Propeller Shafts
19	Steering
21	Transmission and Transfer Cases
22	Wheels and Tires
23	Body Components
24	Heating and Air Conditioning
25	Emission Control Systems
	Index

Service Manual Comment Forms (Rear of Manual)

INTRODUCTION

CONTENTS

page

DESIGNATIONS, LABELS/PLATES, CODES AND DIMENSIONS 1

page

MEASUREMENT AND TORQUE SPECIFICATIONS 11

DESIGNATIONS, LABELS/PLATES, CODES AND DIMENSIONS

INDEX

page

Engine and Transmission/Transfer Case Identification 5
International Vehicle Control and Display Symbols .. 5
Major Component Identification 5
Trailer Towing Specifications 5
Vehicle Code Plate 4
Vehicle Designations 1
Vehicle Dimension Data 5
Vehicle Identification Number (VIN) Plate 4
Vehicle Load Data 5
Vehicle Safety Certification Label 4

VEHICLE DESIGNATIONS

The Vehicle Code Designations chart lists the vehicle description and code for Cherokee and Wrangler vehicles. The codes are used to identify vehicle types in charts, captions and in service procedures. The vehicle codes are different than the Vehicle Identification Number (VIN) or the wheelbase/model code.

The following illustrations shows the labels, decals and plates as well as locations on each vehicle.

VEHICLE CODE DESIGNATIONS

VEHICLE DESCRIPTION	CODE
CHEROKEE - 2DR/4WD	XJ
CHEROKEE - 4DR/4WD	
CHEROKEE - 2DR/2WD	
CHEROKEE - 4DR/2WD	
WRANGLER - 4WD	YJ

J931N-15

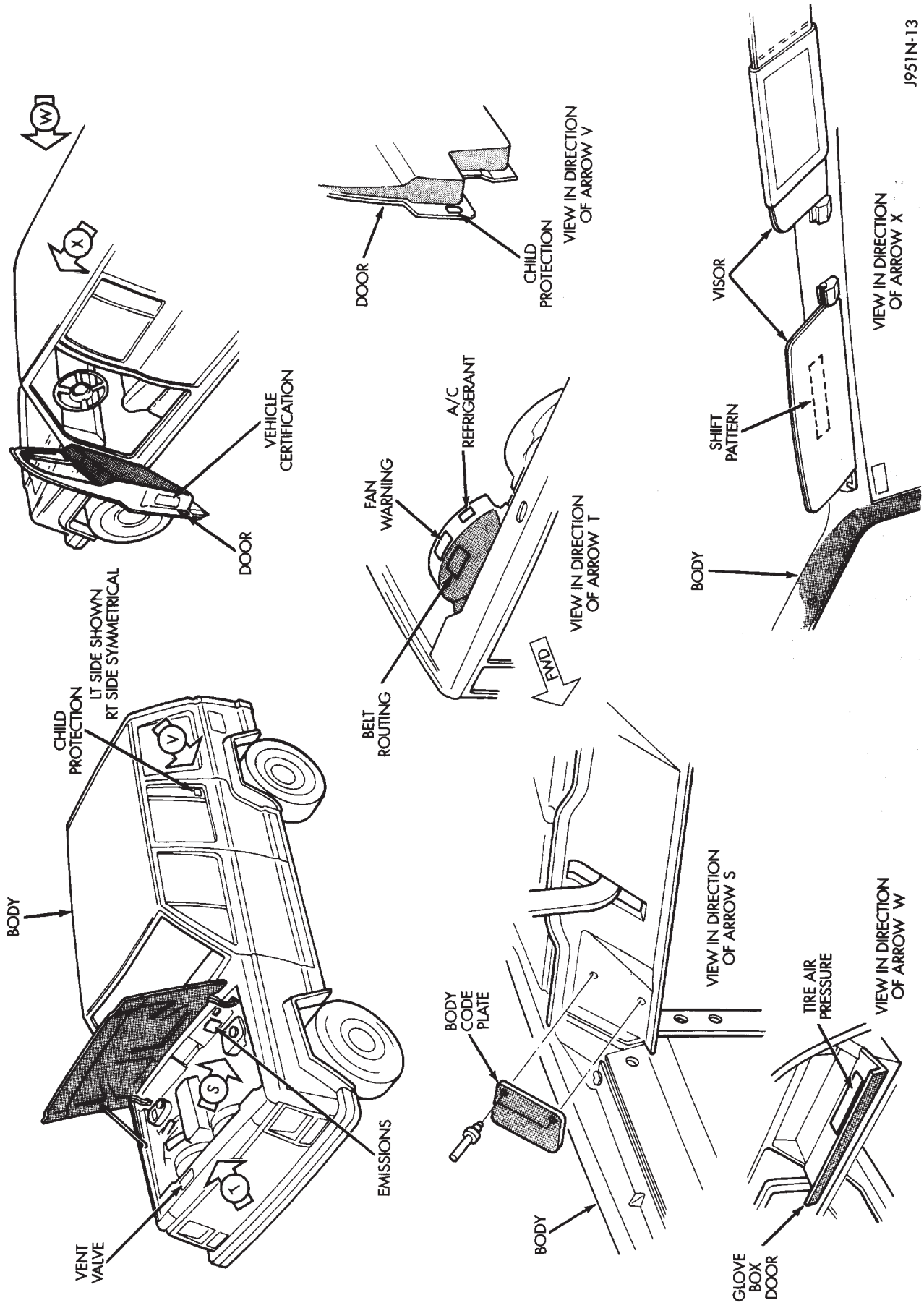

VEHICLE, LABELS AND PLATES—XJ

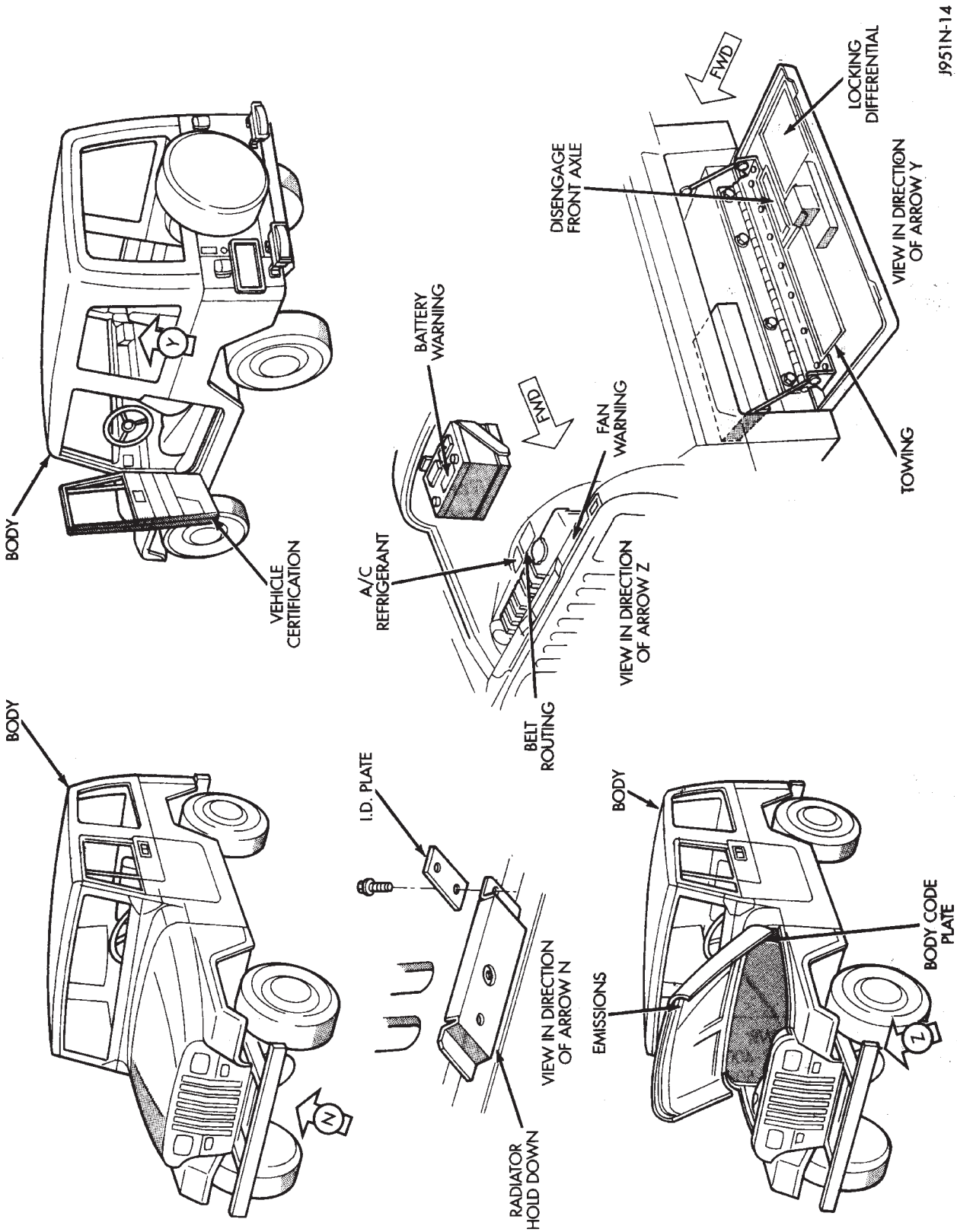

VEHICLE, LABELS AND PLATES—YJ

VEHICLE SAFETY CERTIFICATION LABEL

A vehicle safety certification label (Fig. 1) is attached to every Jeep vehicle. The label certifies that the vehicle conforms to all applicable Federal Motor Vehicle Safety Standards. The label also lists:

- Gross vehicle weight rating (GVWR) and the gross front and rear axle weight ratings (GAWR's) based on a minimum tire rim size and a maximum cold tire inflation pressure.
- Month and year of vehicle manufacture.
- Vehicle identification number (VIN).
- Type of vehicle.
- Month, day and hour (MDH) of final assembly.

The label is located on the driver-side door shutface.

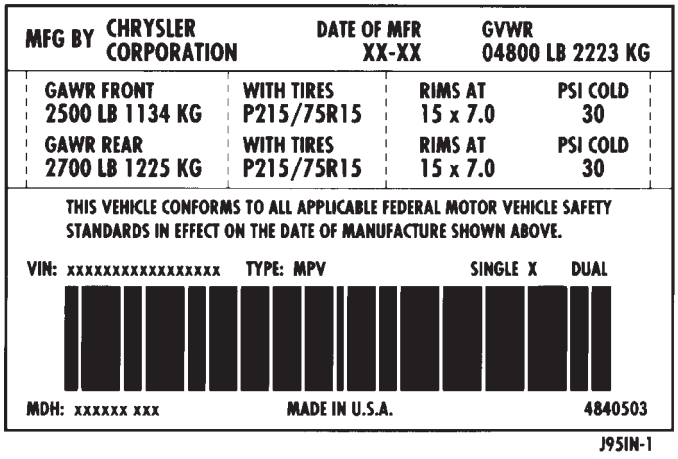

Fig. 1 Vehicle Safety Certification Label—Typical

VEHICLE IDENTIFICATION NUMBER (VIN) PLATE

The Vehicle Identification Number (VIN) plate is located on the lower windshield fence near the left A-pillar. The VIN contains 17 characters that provide data concerning the vehicle. Refer to the VIN decoding chart to determine the identification of a vehicle.

The Vehicle Identification Number is also imprinted on the:

- Body Code Plate.
- Vehicle Safety Certification Label.
- Frame rail.

To protect the consumer from theft and possible fraud the manufacturer is required to include a Check Digit at the ninth position of the Vehicle Identification Number. The check digit is used by the manufacturer and government agencies to verify the authenticity of the vehicle and official documentation. The formula to use the check digit is not released to the general public.

VEHICLE CODE PLATE

A metal vehicle code plate is attached to the left (driver) side of the dash panel in the engine compartment (Fig. 2). There can be a maximum of seven rows of vehicle information imprinted on the plate. The information should be read from left to right, starting with line 1 at the bottom of the plate up through line 7 (as applicable) at the top of the code plate.

Refer to the decoding chart to decode lines 1 up through 3.

Lines 4 through 7 (if used) on the vehicle code plate are imprinted on the plate (in sequence) according to the following:

VEHICLE IDENTIFICATION NUMBER (VIN) DECODING

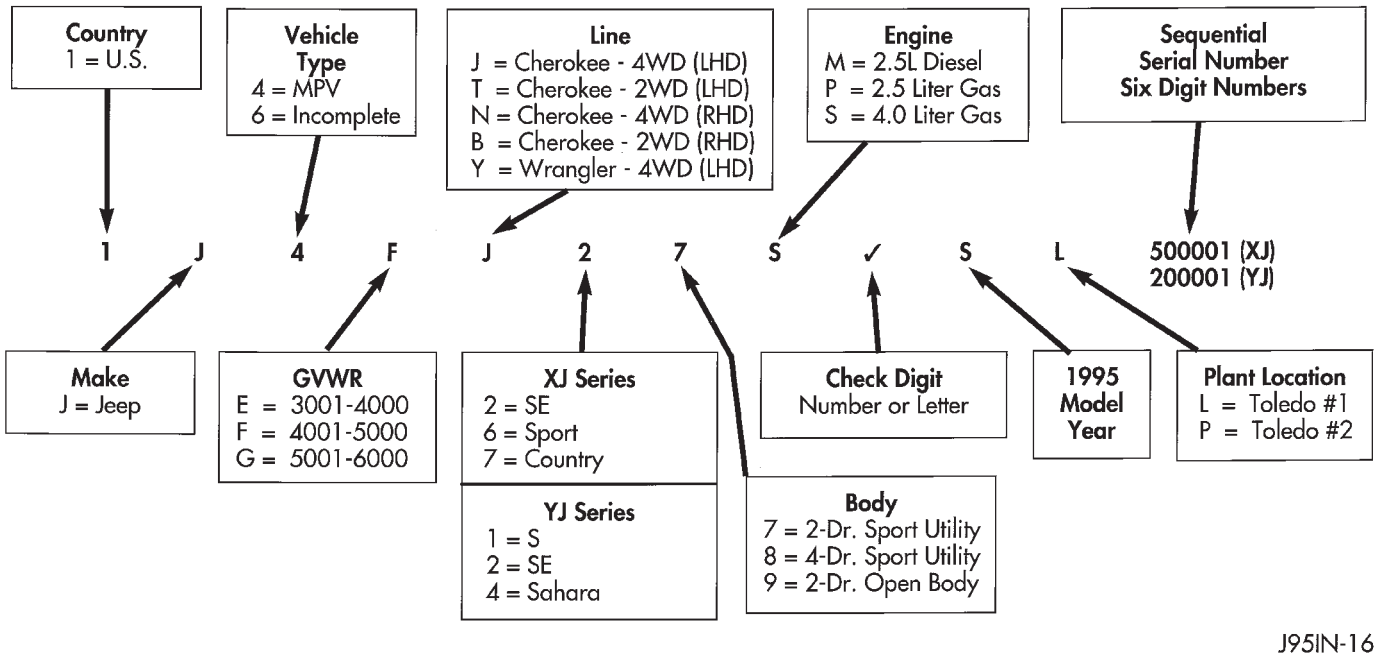

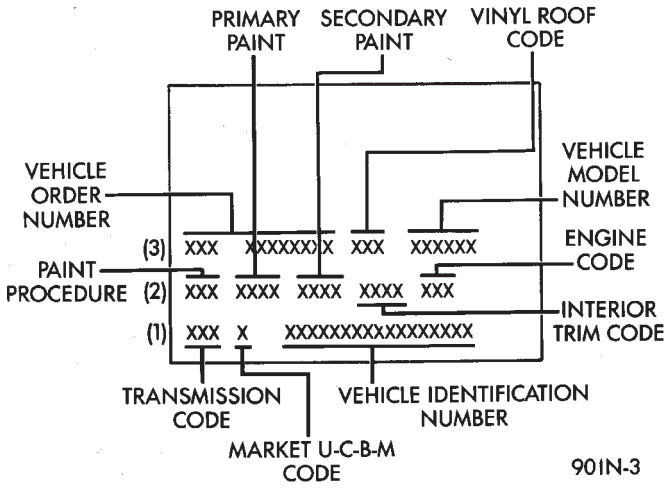

Fig. 2 Vehicle Code Plate

VEHICLE CODE DECODING

Line #1	Digit 1-3	Transmission Sales Code
	Digit 4	Open Space
	Digit 5	Market Code - U-C-B-M
	Digit 6	Open Space
	Digit 7-23	Vehicle Identification No.
Line #2	Digit 1-3	Paint Procedure
	Digit 4	Open Space
	Digit 5-8	Primary Paint
	Digit 9	Open Space
	Digit 10-13	Secondary Paint
	Digit 14	Open Space
	Digit 15-18	Trim Code
	Digit 19	Open Space
	Digit 20-22	Engine Sales Code
	Digit 23	Open Space
Line #3	Digit 1-12	Vehicle Order Number
	Digit 13	Open Space
	Digit 14-16	Vinyl Roof Code (Door Combo Code - Pillette)
	Digit 17	Open Space
	Digit 18-23	Model

J901N-20

- 3-character sales code.
- 3-digit numerical code.
- 6-digit SEC code.

If there is not enough space left in the row for all of the 6-digit SEC code (if used):

- The unused space will remain blank.
- The code will be listed in the next row.

The last nine positions of row 7 will contain a 2-digit code, when applicable, and a 6-digit gateline serial number (same as the last 6 numbers of the VIN).

The last code imprinted on a vehicle code plate will be followed by the imprinted word END. When two vehicle code plates are required, the last available spaces on the first plate will be imprinted with the letters CTD (for continued).

When a second vehicle code plate is necessary, the first four spaces on each row will not be used because of the plate overlap.

ENGINE AND TRANSMISSION/TRANSFER CASE IDENTIFICATION

When required, refer to Group 9, Engines for all engine identification data. Refer to Group 21, Transmissions for all transmission/transfer case identification data.

MAJOR COMPONENT IDENTIFICATION

When required, refer to the applicable service information group for major component identification data.

VEHICLE DIMENSION DATA

The vehicle dimension data charts list the exterior and interior dimensions for each type of Jeep vehicle.

VEHICLE LOAD DATA

The Vehicle Load Data chart lists the following information:

- Gross vehicle weight rating (GVWR).
- Gross axle weight ratings (GAWR).
- Cargo weight.
- Passenger weight for each Jeep type/body style.

TRAILER TOWING SPECIFICATIONS

The Trailer Towing Specification chart provide:

- Minimum Vehicle requirements.
- The maximum trailer tongue weight.
- The maximum trailer weight.
- The maximum combined weight of the trailer/load/towing vehicle with a specific engine/transmission/axle combination.

INTERNATIONAL VEHICLE CONTROL AND DISPLAY SYMBOLS

Most of the graphic symbols illustrated in the following chart are used to identify various instrument controls and displays.

VEHICLE EXTERIOR DIMENSION DATA

MODEL NAME	MODEL	WHEEL BASE cm/in	TRACK FRONT REAR cm/in		LENGTH	OVERALL WIDTH cm/in	HEIGHT	
Cherokee 2 DR-2WD	XJ	257.6 101.4	147.3 58.0	147.3 58.0	428.7 168.8	172.0 67.7	161.0 63.2	
Cherokee 4 DR-2WD	XJ	257.6 101.4	147.3 58.0	147.3 58.0	428.7 168.8	172.0 67.7	161.0 63.2	
Cherokee 2 DR-4WD	XJ	257.6 101.4	147.3 58.0	147.3 58.0	428.7 168.8	172.0 67.7	161.0 63.2	
Cherokee 4 DR-4WD	XJ	257.6 101.4	147.3 58.0	147.3 58.0	428.7 168.8	172.0 67.7	161.0 63.2	
Wrangler 2 DR-4WD	YJ	237.2 93.4	147.3 58.0	147.3 58.0	387.6 152.6	167.7 66.0	(H.T.) 176.5 69.5	(S.T.) 183.0 72.0

VEHICLE INTERIOR DIMENSION DATA

VEHICLE	MODEL	HEAD FRONT REAR cm/in		LEG FRONT REAR cm/in		SHOULDER FRONT REAR cm/in		HIP FRONT REAR cm/in	
Cherokee	XJ	97.3 38.3	96.5 38.0	105.7 41.6	89.7 35.3	139.7 55.0	140.2 55.2	140.5 55.3	113.0 44.5
Wrangler (Hardtop)	XJ	102.1 40.2	102.9 40.5	100.1 39.4	88.9 35.0	134.8 53.1	143.0 56.3	134.8 53.1	91.4 36.0

J95IN-17

VEHICLE DIMENSION DATA

VEHICLE LOAD DATA—XJ

VEHICLE	BODY[1] STYLE	WHEEL/ TIRE	GVWR[2]	PASSENGER WEIGHT (MAX)	CARGO WEIGHT (MAX)	GAWR[3] FRONT	GAWR[3] REAR
XJ 2WD	72	15x7 P215/75R	4550	750	400	2500	2700
XJ 2WD	74	15x7 P215/75R	4600	750	400	2500	2700
XJ 4WD	72	15x7 P215/75R	4850	750	400	2500	2700
XJ 4WD	74	15x7 P215/75R	4900	750	400	2500	2700
XJ 2WD	72 W/TRAILER TOW PACKAGE	15x7 P215/75R	4550	750	400	2500	2700
XJ 2WD	74 W/TRAILER TOW PACKAGE	15x7 P215/75R	4600	750	400	2500	2700
XJ 4WD	72 W/TRAILER TOW PACKAGE	15x7 P215/75R	4850	750	400	2500	2700
XJ 4WD	74 W/TRAILER TOW PACKAGE	15x7 P215/75R	4900	750	400	2500	2700
XJ 4WD	COUNTRY[1]	15x7 P225/70R15	4900	750	400	2500	2700

All Weights Listed In Pounds.
[1] 72 = 2-Door Body
74 = 4-Door Body
[2] Gross Vehicle Weight Rating
[3] Gross Axle Weight Rating

VEHICLE LOAD DATA—YJ

VEHICLE	BODY STYLE	TIRE	GVWR[1]	PASSENGER WEIGHT (MAX)	CARGO WEIGHT (MAX)	GAWR[2] FRONT	GAWR[2] REAR
YJ	S	P205/75R15	4300	300 600[3]	200	2200	2200
YJ	SAHARA (2TG)	P215/75R15	4300	600	200	2200	2200
YJ	SPORT (2TC)	P215/75R15	4300	600	200	2200	2200
YJ	SE	P215/75R15	4300	600	200	2200	2200

All Weights Listed In Pounds.
[1]Gross Vehicle Weight Rating
[2]Gross Axle Weight Rating
[3]With Rear Seat

J95IN-18

TRAILER TOWING SPECIFICATIONS

CHEROKEE — XJ

Trailer Type	Gross Trailer Weight	Tongue Weight (See Note 1)	Towing Pkg.	GCWR (Max.) (See Note 2)	Engine	Trans-mission	Steering	Battery	Cooling	Axle	Tire Size
Fold Down and Low Profile • 25 ft² (2.3m²) or Less Frontal Area • Up to 2,000 lbs. (907 kg) also small boats, flatbed trailers etc.	2,000 lbs. (907 kg) (Max.)	300 lbs. (91 kg) (Max.) 10 to 15% of GTW	Class I Hitch (Light Duty)	4x2 5,781 lbs. (2,627 kg) 4x4 6,060 lbs. (2,754 kg)	4.0L 2.5L	All Manual 5 spd. ONLY	Power	Heavy Duty	All	All	P215/75 R15
	1,000 lbs. (453 kg) (Max.)			4x2 4x4 5,300 lbs. (2,409 kg)	2.5L	Auto 3 spd. ONLY					
Other Trailer Types and Weights up to Full Box Shape • Up to 64 ft² (5.8m²) Frontal Area • Up to 5,000 lbs. (2,268 kg) GTW • Maximum Travel Trailer Length: 25 ft. (7.6m)	5,000 lbs. (2,268 kg) (Max.)	750 lbs. (340 kg) (Max.)	Class III Hitch (Light Duty)	4x2 8,781 lbs. (3,983 kg) 4x4 9,060 lbs. (4,110 kg)	4.0L 6 cyl.	Auto. Trans. with Cooler	Power	Heavy Duty	Heavy Duty	All	P215/75 R15

1 The towing vehicle payload should be reduced by the tongue load (for a dead weight hitch) to keep the rear axle loading below GAWR (Gross Axle Weight Rating) of 2,700 lbs. (1,225 kg).

2 GCWR = Total combined weight of trailer and tow vehicle.

WRANGLER — YJ

Trailer Type	Gross Trailer Weight	Tongue Weight (See Note 1)	Towing Pkg.	GCWR (Max.) (See Note 2)	Engine	Trans-mission	Steering	Battery	Cooling	Axle	Tire Size
Fold Down and Low Profile • 25 ft.² (2.3m²) or Less Frontal Area • Up to 2000 lbs. (907 kg) (also small boats, flatbed trailers etc.)	2,000 lbs. (907 kg) (Max.)	10 to 15% of GTW 300 lbs.	Class I Hitch	6,046 lbs. (2,742 kg)	4.0L 2.5L	All Manual 5 spd. ONLY	All	All	All	All	P215/75 R15
	1,000 lbs. (453 kg) (Max.)			5,300 lbs. (2,409 kg)	2.5L	Auto. 3 spd. ONLY					
Other Trailer Types and Weights up to Full Box Shape • Up to 64 ft² (5.8m²) Frontal Area • Up to 5,000 lbs. (2,268 kg) GTW • Maximum Travel Trailer Length: 25 ft. (7.6m)	NOT RECOMMENDED										

1 The towing vehicle payload should be reduced by the tongue load (for a dead weight hitch) to keep the rear axle loading below GAWR (Gross Axle Weight Rating) of 2,500 lbs. (1,134 kg).

2 GCWR = Total combined weight of trailer and tow vehicle.

VEHICLE CONTROL AND DISPLAY SYMBOLS

 HIGH BEAM	 FOG LIGHTS	 HEADLIGHTS, PARKING LIGHTS, PANEL LIGHTS	 TURN SIGNAL	 HAZARD WARNING	 WINDSHIELD WASHER
 WINDSHIELD WIPER	 WINDSHIELD WIPER AND WASHER	 WINDSHIELD DEMISTING AND DEFROSTING	 REAR WINDSHIELD WIPER/WASHER	 REAR WINDOW DEFOGGER	 REAR WINDOW WIPER
 REAR WINDOW WASHER	 FUEL	 ENGINE COOLANT TEMPERATURE	 BATTERY CHARGING CONDITION	 ENGINE OIL	 SEAT BELT
 BRAKE FAILURE	 PARKING BRAKE	 FRONT HOOD	 VENTILATING FAN	 HORN	 LIGHTER

J94IN-4

MEASUREMENT AND TORQUE SPECIFICATIONS

INDEX

page

Metric and English/Sae Conversion 11
Specification Notations 11
Torque Specifications 11

SPECIFICATION NOTATIONS

WARNING: THE USE OF INCORRECT ATTACHING HARDWARE CAN RESULT IN COMPONENT DAMAGE AND/OR PERSONAL INJURY.

It is important to retain the original attaching hardware for assembly of the components. If the attaching hardware is not reusable, hardware with equivalent specifications must be used.

METRIC AND ENGLISH/SAE CONVERSION

The following chart will assist in converting metric units to equivalent English and SAE units, or vise versa.

TORQUE SPECIFICATIONS

TORQUE CHARTS

A torque chart for fasteners is provided at the end of each group (of service information). Refer to the Torque Specifications chart to determine torque values not listed in the group.

It is important to be aware that the torque values listed in the chart are based on clean and dry bolt threads. Reduce the torque value by 10 percent when the bolt threads are lubricated and by 20 percent if new.

BOLT THREAD AND GRADE/CLASS IDENTIFICATION

THREAD IDENTIFICATION

SAE and metric bolt/nut threads are not the same. The difference is described in the Thread Notation chart.

GRADE/CLASS IDENTIFICATION

The SAE bolt strength grades range from grade 2 to grade 8. The higher the grade number, the greater the bolt strength. Identification is determined by the line marks on the top of each bolt head. The actual bolt strength grade corresponds to the number of line marks plus 2. The most commonly used metric bolt strength classes are 9.8 and 12.9. The metric strength class identification number is imprinted on the head of the bolt. The higher the class number,

CONVERSION FORMULAS AND EQUIVALENT VALUES

Multiply	By	To Get	Multiply	By	To Get
in-lbs	x 0.11298	= Newton-Meters (N•m)	N•m	x 8.851	= in-lbs
ft-lbs	x 1.3558	= Newton-Meters (N•m)	N•m	x 0.7376	= ft-lbs
Inches Hg (60°F)	x 3.377	= Kilopascals (kPa)	kPa	x 0.2961	= Inches Hg
psi	x 6.895	= Kilopascals (kPa)	kPa	x 0.145	= psi
Inches	x 25.4	= Millimeters (mm)	mm	x 0.03937	= Inches
Feet	x 0.3048	= Meters (M)	M	x 3.281	= Feet
Yards	x 0.9144	= Meters (M)	M	x 1.0936	= Yards
Miles	x 1.6093	= Kilometers (Km)	Km	x 0.6214	= Miles
mph	x 1.6093	= Kilometers/Hr. (Km/h)	Km/h	x 0.6214	= mph
Feet/Sec.	x 0.3048	= Meters/Sec. (M/S)	M/S	x 3.281	= Feet/Sec.
Kilometers/Hr.	x 0.27778	= Meters/Sec. (M/S)	M/S	x 3.600	= Kilometers/Hr.
mph	x 0.4470	= Meters/Sec. (M/S)	M/S	x 2.237	= mph

COMMON METRIC EQUIVALENTS

1 Inch	= 25 Millimeters	1 Cubic Inch	= 16 Cubic Centimeters
1 Foot	= 0.3 Meter	1 Cubic Foot	= 0.03 Cubic Meter
1 Yard	= 0.9 Meter	1 Cubic Yard	= 0.8 Cubic Meter
1 Mile	= 1.6 Kilometers		

J91IN-1

TORQUE SPECIFICATIONS

SPECIFIED TORQUE FOR STANDARD BOLTS

Class	Diameter mm	Pitch mm	Specified torque					
			Hexagon head bolt			Hexagon flange bolt		
			N•m	kgf-cm	ft-lbf	N•m	kgf-cm	ft-lbf
4T	6	1	5	55	48 in.-lbf	6	60	52 in.-lbf
	8	1.25	12.5	130	9	14	145	10
	10	1.25	26	260	19	29	290	21
	12	1.25	47	480	35	53	540	39
	14	1.5	74	760	55	84	850	61
	16	1.5	115	1,150	83	—	—	—
5T	6	1	6.5	65	56 in.-lbf	7.5	75	65 in.-lbf
	8	1.25	15.5	160	12	17.5	175	13
	10	1.25	32	330	24	36	360	26
	12	1.25	59	600	43	65	670	48
	14	1.5	91	930	67	100	1,050	76
	16	1.5	140	1,400	101	—	—	—
6T	6	1	8	80	69 in.-lbf	9	90	78 in.-lbf
	8	1.25	19	195	14	21	210	15
	10	1.25	39	400	29	44	440	32
	12	1.25	71	730	53	80	810	59
	14	1.5	110	1,100	80	125	1,250	90
	16	1.5	170	1,750	127	—	—	—
7T	6	1	10.5	110	8	12	120	9
	8	1.25	25	260	19	28	290	21
	10	1.25	52	530	38	58	590	43
	12	1.25	95	970	70	105	1,050	76
	14	1.5	145	1,500	108	165	1,700	123
	16	1.5	230	2,300	166	—	—	—
8T	8	1.25	29	300	22	33	330	24
	10	1.25	61	620	45	68	690	50
	12	1.25	110	1,100	80	120	1,250	90
9T	8	1.25	34	340	25	37	380	27
	10	1.25	70	710	51	78	790	57
	12	1.25	125	1,300	94	140	1,450	105
10T	8	1.25	38	390	28	42	430	31
	10	1.25	78	800	58	88	890	64
	12	1.25	140	1,450	105	155	1,600	116
11T	8	1.25	42	430	31	47	480	35
	10	1.25	87	890	64	97	990	72
	12	1.25	155	1,600	116	175	1,800	130

THREAD NOTATION—SAE AND METRIC

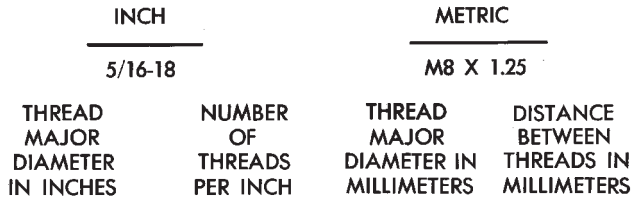

the greater the bolt strength. Some metric nuts are imprinted with a single-digit strength class on the nut face. Refer to the bolt identification and bolt strength chart.

METRIC CONVERSION

Refer to the chart to convert torque values listed in metric Newton-meters (N·m). Also, use the chart to convert between millimeters (mm) and inches (in.)

BOLT IDENTIFICATION

Bolt Markings and Torque - Metric

Commercial Steel Class

	8.8	10.9	12.9
Bolt Head Markings	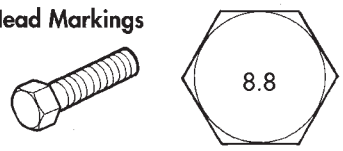	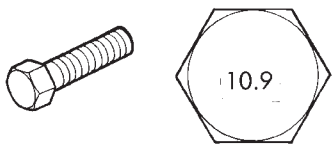	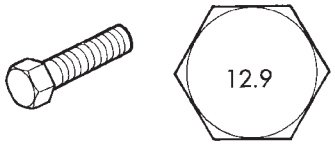

Body Size	Torque				Torque				Torque			
Diam.	Cast Iron		Aluminum		Cast Iron		Aluminum		Cast Iron		Aluminum	
mm	N•m	ft-lb	N•m	ft-lb	N•m	ft-lb	N•m	ft-lb	N•m	ft-lb	N•m	ft-lb
6	9	5	7	4	14	9	11	7	14	9	11	7
7	14	9	11	7	18	14	14	11	23	18	18	14
8	25	18	18	14	32	23	25	18	36	27	28	21
10	40	30	30	25	60	45	45	35	70	50	55	40
12	70	55	55	40	105	75	80	60	125	95	100	75
14	115	85	90	65	160	120	125	95	195	145	150	110
16	180	130	140	100	240	175	190	135	290	210	220	165
18	230	170	180	135	320	240	250	185	400	290	310	230

Bolt Markings and Torque Values - U.S. Customary

SAE Grade Number	5	8
Bolt Head Markings These are all SAE Grade 5 (3) line	 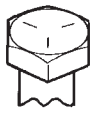	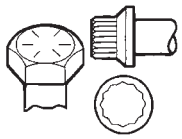

Body Size	Bolt Torque - Grade 5 Bolt				Bolt Torque - Grade 8 Bolt			
	Cast Iron		Aluminum		Cast Iron		Aluminum	
	N•m	ft-lb	N•m	ft-lb	N•m	ft-lb	N•m	ft-lb
1/4 - 20	9	7	8	6	15	11	12	9
- 28	12	9	9	7	18	13	14	10
5/16 - 18	20	15	16	12	30	22	24	18
- 24	23	17	19	14	33	24	25	19
3/8 - 16	40	30	25	20	55	40	40	30
- 24	40	30	35	25	60	45	45	35
7/16 - 14	60	45	45	35	90	65	65	50
- 20	65	50	55	40	95	70	75	55
1/2 - 13	95	70	75	55	130	95	100	75
- 20	100	75	80	60	150	110	120	90
9/16 - 12	135	100	110	80	190	140	150	110
- 18	150	110	115	85	210	155	170	125
5/8 - 11	180	135	150	110	255	190	205	150
- 18	210	155	160	120	290	215	230	170
3/4 - 10	325	240	255	190	460	340	365	270
- 16	365	270	285	210	515	380	410	300
7/8 - 9	490	360	380	280	745	550	600	440
- 14	530	390	420	310	825	610	660	490
1 - 8	720	530	570	420	1100	820	890	660
- 14	800	590	650	480	1200	890	960	710

BOLT STRENGTH

HOW TO DETERMINE BOLT STRENGTH

	Mark	Class
Hexagon head bolt	 Bolt head No. 4 — 4T; 5 — 5T; 6 — 6T; 7 — 7T; 8 — 8T; 9 — 9T; 10 — 10T; 11 — 11T	
	 No mark	4T
Hexagon flange bolt w/washer hexagon bolt	 No mark	4T
Hexagon head bolt	 Two protruding lines	5T
Hexagon flange bolt w/washer hexagon bolt	 Two protruding lines	6T
Hexagon head bolt	 Three protruding lines	7T
Hexagon head bolt	 Four protruding lines	8T

	Mark	Class
Stud bolt	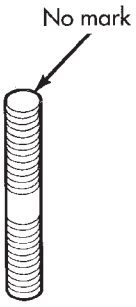	4T
	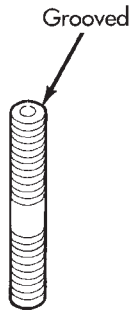	6T
Welded bolt	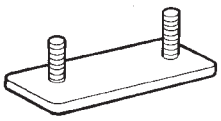	4T

METRIC CONVERSION

in-lbs to N•m

in- lb	N•m	in-lb	N•m	in-lb	N•m	in-lb	N•m	in-lb	N•m
2	.2260	42	4.7453	82	9.2646	122	13.7839	162	18.3032
4	.4519	44	4.9713	84	9.4906	124	14.0099	164	18.5292
6	.6779	46	5.1972	86	9.7165	126	14.2359	166	18.7552
8	.9039	48	5.4232	88	9.9425	128	14.4618	168	18.9811
10	1.1298	50	5.6492	90	10.1685	130	14.6878	170	19.2071
12	1.3558	52	5.8751	92	10.3944	132	14.9138	172	19.4331
14	1.5818	54	6.1011	94	10.6204	134	15.1397	174	19.6590
16	1.8077	56	6.3270	96	10.8464	136	15.3657	176	19.8850
18	2.0337	58	6.5530	98	11.0723	138	15.5917	178	20.1110
20	2.2597	60	6.7790	100	11.2983	140	15.8176	180	20.3369
22	2.4856	62	7.0049	102	11.5243	142	16.0436	182	20.5629
24	2.7116	64	7.2309	104	11.7502	144	16.2696	184	20.7889
26	2.9376	66	7.4569	106	11.9762	146	16.4955	186	21.0148
28	3.1635	68	7.6828	108	12.2022	148	16.7215	188	21.2408
30	3.3895	70	7.9088	110	12.4281	150	16.9475	190	21.4668
32	3.6155	72	8.1348	112	12.6541	152	17.1734	192	21.6927
34	3.8414	74	8.3607	114	12.8801	154	17.3994	194	21.9187
36	4.0674	76	8.5867	116	13.1060	156	17.6253	196	22.1447
38	4.2934	78	8.8127	118	13.3320	158	17.8513	198	22.3706
40	4.5193	80	9.0386	120	13.5580	160	18.0773	200	22.5966

N•m to in-lbs

N•m	in-lb	N•m	in-lb	N•m	in-lb	N•m	in-lb	N•m	in-lb
.2	1.7702	4.2	37.1747	8.2	72.5792	12.2	107.9837	16.2	143.3882
.4	3.5404	4.4	38.9449	8.4	74.3494	12.4	109.7539	16.4	145.1584
.6	5.3107	4.6	40.7152	8.6	76.1197	12.6	111.5242	16.6	146.9287
.8	7.0809	4.8	42.4854	8.8	77.8899	12.8	113.2944	16.8	148.6989
1	8.8511	5	44.2556	9	79.6601	13	115.0646	17	150.4691
1.2	10.6213	5.2	46.0258	9.2	81.4303	13.2	116.8348	17.2	152.2393
1.4	12.3916	5.4	47.7961	9.4	83.2006	13.4	118.6051	17.4	154.0096
1.6	14.1618	5.6	49.5663	9.6	84.9708	13.6	120.3753	17.6	155.7798
1.8	15.9320	5.8	51.3365	9.8	86.7410	13.8	122.1455	17.8	157.5500
2	17.7022	6	53.1067	10	88.5112	14	123.9157	18	159.3202
2.2	19.4725	6.2	54.8770	10.2	90.2815	14.2	125.6860	18.5	163.7458
2.4	21.2427	6.4	56.6472	10.4	92.0517	14.4	127.4562	19	168.1714
2.6	23.0129	6.6	58.4174	10.6	93.8219	14.6	129.2264	19.5	172.5970
2.8	24.7831	6.8	60.1876	10.8	95.5921	14.8	130.9966	20	177.0225
3	26.5534	7	61.9579	11	97.3624	15	132.7669	20.5	181.4480
3.2	28.3236	7.2	63.7281	11.2	99.1326	15.2	134.5371	21	185.8736
3.4	30.0938	7.4	65.4983	11.4	100.9028	15.4	136.3073	22	194.7247
3.6	31.8640	7.6	67.2685	11.6	102.6730	15.6	138.0775	23	203.5759
3.8	33.6342	7.8	69.0388	11.8	104.4433	15.8	139.8478	24	212.4270
4	35.4045	8	70.8090	12	106.2135	16	141.6180	25	221.2781

ft-lbs to N•m

ft-lb	N•m	ft-lb	N•m	ft-lb	N•m	ft-lb	N•m	ft-lb	N•m
1	1.3558	21	28.4722	41	55.5885	61	82.7049	81	109.8212
2	2.7116	22	29.8280	42	56.9444	62	84.0607	82	111.1770
3	4.0675	23	31.1838	43	58.3002	63	85.4165	83	112.5328
4	5.4233	24	32.5396	44	59.6560	64	86.7723	84	113.8888
5	6.7791	25	33.8954	45	61.0118	65	88.1281	85	115.2446
6	8.1349	26	35.2513	46	62.3676	66	89.4840	86	116.6004
7	9.4907	27	36.6071	47	63.7234	67	90.8398	87	117.9562
8	10.8465	28	37.9629	48	65.0793	68	92.1956	88	119.3120
9	12.2024	29	39.3187	49	66.4351	69	93.5514	89	120.6678
10	13.5582	30	40.6745	50	67.7909	70	94.9073	90	122.0236
11	14.9140	31	42.0304	51	69.1467	71	96.2631	91	123.3794
12	16.2698	32	43.3862	52	70.5025	72	97.6189	92	124.7352
13	17.6256	33	44.7420	53	71.8583	73	98.9747	93	126.0910
14	18.9815	34	46.0978	54	73.2142	74	100.3316	94	127.4468
15	20.3373	35	47.4536	55	74.5700	75	101.6862	95	128.8026
16	21.6931	36	48.8094	56	75.9258	76	103.0422	96	130.1586
17	23.0489	37	50.1653	57	77.2816	77	104.3980	97	131.5144
18	24.4047	38	51.5211	58	78.6374	78	105.7538	98	132.8702
19	25.7605	39	52.8769	59	79.9933	79	107.1196	99	134.2260
20	27.1164	40	54.2327	60	81.3491	80	108.4654	100	135.5820

N•m to ft-lbs

N•m	ft-lb	N•m	ft-lb	N•m	ft-lb	N•m	ft-lb	N•m	ft-lb
1	.7376	21	15.9888	41	30.2400	61	44.9913	81	59.7425
2	1.4751	22	16.2264	42	30.9776	62	45.7289	82	60.4801
3	2.2127	23	16.9639	43	31.7152	63	46.4664	83	61.2177
4	2.9502	24	17.7015	44	32.4527	64	47.2040	84	61.9552
5	3.6878	25	18.4391	45	33.1903	65	47.9415	85	62.6928
6	4.4254	26	19.1766	46	33.9279	66	48.6791	86	63.4303
7	5.1629	27	19.9142	47	34.6654	67	49.4167	87	64.1679
8	5.9005	28	20.6517	48	35.4030	68	50.1542	88	64.9545
9	6.6381	29	21.3893	49	36.1405	69	50.8918	89	65.6430
10	7.3756	30	22.1269	50	36.8781	70	51.6293	90	66.3806
11	8.1132	31	22.8644	51	37.6157	71	52.3669	91	67.1181
12	8.8507	32	23.6020	52	38.3532	72	53.1045	92	67.8557
13	9.5883	33	24.3395	53	39.0908	73	53.8420	93	68.5933
14	10.3259	34	25.0771	54	39.8284	74	54.5720	94	69.3308
15	11.0634	35	25.8147	55	40.5659	75	55.3172	95	70.0684
16	11.8010	36	26.5522	56	41.3035	76	56.0547	96	70.8060
17	12.5386	37	27.2898	57	42.0410	77	56.7923	97	71.5435
18	13.2761	38	28.0274	58	42.7786	78	57.5298	98	72.2811
19	14.0137	39	28.7649	59	43.5162	79	58.2674	99	73.0187
20	14.7512	40	29.5025	60	44.2537	80	59.0050	100	73.7562

in. to mm

in.	mm	in.	mm	in.	mm	in.	mm	in.	mm
.01	.254	.21	5.334	.41	10.414	.61	15.494	.81	20.574
.02	.508	.22	5.588	.42	10.668	.62	15.748	.82	20.828
.03	.762	.23	5.842	.43	10.922	.63	16.002	.83	21.082
.04	1.016	.24	6.096	.44	11.176	.64	16.256	.84	21.336
.05	1.270	.25	6.350	.45	11.430	.65	16.510	.85	21.590
.06	1.524	.26	6.604	.46	11.684	.66	16.764	.86	21.844
.07	1.778	.27	6.858	.47	11.938	.67	17.018	.87	22.098
.08	2.032	.28	7.112	.48	12.192	.68	17.272	.88	22.352
.09	2.286	.29	7.366	.49	12.446	.69	17.526	.89	22.606
.10	2.540	.30	7.620	.50	12.700	.70	17.780	.90	22.860
.11	2.794	.31	7.874	.51	12.954	.71	18.034	.91	23.114
.12	3.048	.32	8.128	.52	13.208	.72	18.288	.92	23.368
.13	3.302	.33	8.382	.53	13.462	.73	18.542	.93	23.622
.14	3.556	.34	8.636	.54	13.716	.74	18.796	.94	23.876
.15	3.810	.35	8.890	.55	13.970	.75	19.050	.95	24.130
.16	4.064	.36	9.144	.56	14.224	.76	19.304	.96	24.384
.17	3.318	.37	9.398	.57	14.478	.77	19.558	.97	24.638
.18	4.572	.38	9.652	.58	14.732	.78	19.812	.98	24.892
.19	4.826	.39	9.906	.59	14.986	.79	20.066	.99	25.146
.20	5.080	.40	10.160	.60	15.240	.80	20.320	1.00	25.400

mm to in.

mm	in.	mm	in.	mm	in.	mm	in.	mm	in.
.01	.00039	.21	.00827	.41	.01614	.61	.02402	.81	.03189
.02	.00079	.22	.00866	.42	.01654	.62	.02441	.82	.03228
.03	.00118	.23	.00906	.43	.01693	.63	.02480	.83	.03268
.04	.00157	.24	.00945	.44	.01732	.64	.02520	.84	.03307
.05	.00197	.25	.00984	.45	.01772	.65	.02559	.85	.03346
.06	.00236	.26	.01024	.46	.01811	.66	.02598	.86	.03386
.07	.00276	.27	.01063	.47	.01850	.67	.02638	.87	.03425
.08	.00315	.28	.01102	.48	.01890	.68	.02677	.88	.03465
.09	.00354	.29	.01142	.49	.01929	.69	.02717	.89	.03504
.10	.00394	.30	.01181	.50	.01969	.70	.02756	.90	.03543
.11	.00433	.31	.01220	.51	.02008	.71	.02795	.91	.03583
.12	.00472	.32	.01260	.52	.02047	.72	.02835	.92	.03622
.13	.00512	.33	.01299	.53	.02087	.73	.02874	.93	.03661
.14	.00551	.34	.01339	.54	.02126	.74	.02913	.94	.03701
.15	.00591	.35	.01378	.55	.02165	.75	.02953	.95	.03740
.16	.00630	.36	.01417	.56	.02205	.76	.02992	.96	.03780
.17	.00669	.37	.01457	.57	.02244	.77	.03032	.97	.03819
.18	.00709	.38	.01496	.58	.02283	.78	.03071	.98	.03858
.19	.00748	.39	.01535	.59	.02323	.79	.03110	.99	.03898
.20	.00787	.40	.01575	.60	.02362	.80	.03150	1.00	.03937

LUBRICATION AND MAINTENANCE

CONTENTS

	page		page
CHASSIS AND BODY COMPONENTS	28	GENERAL INFORMATION	1
DRIVETRAIN	22	JUMP STARTING, TOWING AND HOISTING	9
ENGINE MAINTENANCE	15	MAINTENANCE SCHEDULES	4

GENERAL INFORMATION

INDEX

	page		page
Classification of Lubricants	2	International Symbols	1
Components Requiring No Lubrication	2	Introduction	1
Fluid Capacities	3	Lubrication and Replacement Parts Recommendation	2
Fuel Requirements	1		

INTRODUCTION

Lubrication and maintenance is divided into required and recommended service tasks. The required service tasks must be completed to verify the emission controls function correctly. The recommended service tasks should be completed to maintain safety and durability.

This information will assist the service personnel in providing maximum protection for each owner's vehicle.

Conditions can vary with individual driving habits. It is necessary to schedule maintenance as a time interval as well as a distance interval.

It is the owner's responsibility to determine the applicable driving condition. Also to have the vehicle serviced according to the maintenance schedule, and to pay for the necessary parts and labor.

Additional maintenance and lubrication information is listed in the Owner's Manual.

INTERNATIONAL SYMBOLS

Chrysler Corporation uses international symbols to identify engine compartment lubricant and fluid inspection and fill locations (Fig. 1).

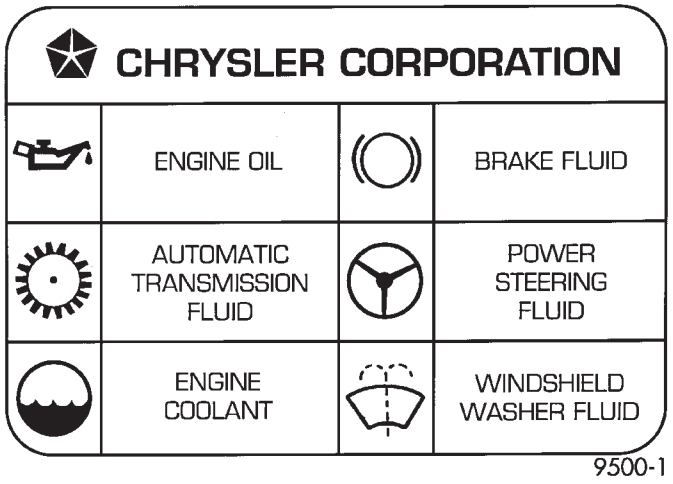

Fig. 1 International Symbols

FUEL REQUIREMENTS

All gasoline engines require the use of unleaded gasoline to reduce the potentially harmful effects of lead to the environment. Also unleaded fuel is necessary to prevent damage to the catalytic converter/O2 sensor. The fuel must have a minimum octane rating of 87 based on the (R + M)/2 calculation method.

CAUTION: UNLEADED FUEL ONLY must be used in vehicles equipped with a catalyst emission control system. All vehicles have reminders printed on the instrument panel below the fuel gauge and on the fuel filler door. The vehicles also have fuel filler tubes that are specially designed to accept only the small-diameter dispensing nozzles. It is illegal to bypass the design of an unleaded fuel filler tube and contaminate the fuel system.

CLASSIFICATION OF LUBRICANTS

Lubricating fluids and chassis lubricants are classified according to standards recommended by the:

- Society of Automotive Engineers (SAE)
- American Petroleum Institute (API)
- National Lubricating Grease Institute (NLGI)

ENGINE OIL

API CERTIFICATION MARK

For maximum engine protection during all driving conditions, install an engine oil that contains the API Certification Mark (Fig. 2). The API Certification Mark indicates that the oil is certified to meet the most critical requirements established by the manufacturer.

Conformance to API specifications is determined by tests that measure the ability of an oil to control:

- Engine wear.
- Bearing corrosion.
- Sludge.
- Varnish.
- Oil thickening.
- Rust.
- Piston deposits.



9400-9

Fig. 2 The API Engine Oil Certification Mark

SAE VISCOSITY GRADE

An SAE viscosity grade is used to specify the viscosity of engine oil. SAE 30 specifies a single viscosity engine oil. Engine oils also have multiple viscosities. These are specified with a dual SAE viscosity grade which indicates the cold-to-hot temperature viscosity range.

API SERVICE GRADE CERTIFIED

The API Service Grade specifies the type of performance the engine oil is intended to provide. The API Service Grade specifications also apply to energy conserving engine oils.

Use an engine oil that is API Service Grade Certified or an oil that conforms to the API Service Grade SH or SH/CD. MOPAR provides engine oils that conform to all of these service grades.

GEAR LUBRICANTS

A dual grade is also used to specify the viscosity of multi-purpose gear lubricants.

The API grade designation identifies gear lubricants in terms of recommended usage.

CHASSIS COMPONENT AND WHEEL BEARING LUBRICANTS

The chassis and wheel bearing lubricants that are recommended are identified by the NLGI Certification Symbol. The symbol contains a coded designation. This identifies the usage and quality of the lubricant.

The letter G within the symbol designates wheel bearing lubricant. The letter L designates chassis lubricant. When the letters are combined, the lubricant can be used for dual applications. Use only lubricants that display the NLGI Certification Symbol (Fig. 3).

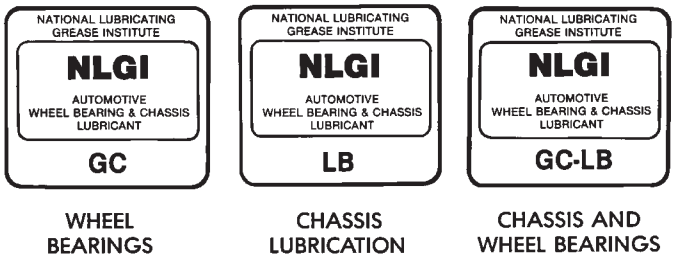

9200-7

Fig. 3 NLGI Lubricant Container Certification/ Identification Symbol

LUBRICATION AND REPLACEMENT PARTS RECOMMENDATION

Jeep vehicles are engineered to provide many years of dependable operation. However, lubrication service and maintenance are required for each vehicle. When necessary, MOPAR® brand lubricants and genuine replacement parts are highly recommended. Each MOPAR brand lubricant and replacement part is designed and to provide dependability and long service life.

COMPONENTS REQUIRING NO LUBRICATION

There are many components that should not be lubricated. The components that should not be lubricated are:

- Air pumps.
- Generator bearings.
- Distributors.
- Drive belts.
- Drive belt idler pulleys.
- Rubber bushings.
- Starter motor bearings.
- Suspension strut bearings.
- Throttle control cables.
- Throttle linkage ball joints.
- Water pump bearings.

FLUID CAPACITIES

Fuel Tank

XJ .....76.4 L (20.2 gal.)
YJ(Standard) .....56.8 L (15 gal.)
YJ(Optional) .....75.7 L (20 gal.)

Engine Oil

2.5L .....3.8 L (4.0 qts.)
4.0L .....5.7 L (6.0 qts.)

Cooling System

2.5L(XJ).....9.5 L* (10 qts.*)
2.5L(YJ) .....8.5 L** (9.0 qts.**)
4.0L(XJ).....11.4 L* (12.0 qts.*)
4.0L(YJ) .....9.9 L** (10.5 qts.**)

* Includes (2.2 L) (2.3 qts) for coolant recovery reservoir.

** Includes (0.9 L) (1.0 qt.) for coolant recovery reservoir.

Automatic Transmission

Dry fill capacity.*****
AW4 (XJ-4.0L).....8.0 L (16.9 pts.)
30RH (YJ-2.5L) .....8.2 L (17.5 pts.)
32RH (YJ-4.0L) .....8.2 L (17.5 pts.)

*****Depending on type and size of internal cooler, length and inside diameter of cooler lines, or use of an auxiliary cooler, these figures may vary. Refer to Group 21, Transmission for proper fluid fill procedure.

Manual Transmission

AX4/5 (4X2) .....3.3 L (3.5 qts.)
AX5 (4X4) .....3.2 L (3.3 qts.)
AX15 (4X2) .....3.1 L (3.2 qts.)
AX15 (4X4) .....3.15 L (3.32 qts.)
Fill to bottom of fill hole.

Transfer Case

SELEC-TRAC 242(XJ) .....1.4 L (3.0 pts.)
COMMAND-TRAC 231(XJ) .....1.0 L (2.2 pts.)
COMMAND-TRAC 231(YJ-Man Trans) ..1.5 L (3.25 pts.)
COMMAND-TRAC 231(YJ-Auto Trans)....1.0 L (2.2 pts.)

Front Axle

MODEL 30 (YJ).....1.65 L (3.76 pts.)
MODEL 30 (XJ).....1.48 L (3.13 pts.)

Rear Axle

MODEL 35 (XJ-YJ) .....1.6 L (3.38 pts.*)
8-1/4 (XJ) .....2.08 L (4.4 pts.*)

* When equipped with TRAC-LOK, include 2 ounces of Friction Modifier Additive.

MAINTENANCE SCHEDULES

INTRODUCTION

There are two maintenance schedules that show proper service intervals for Jeep Cherokee and Jeep Wrangler vehicles. Use the schedule that best describes the conditions the vehicle is operated under. When mileage and time is listed, follow the interval that occurs first.

Schedule—A lists all the scheduled maintenance to be performed under normal operating conditions.

Schedule—B is a schedule for vehicles that are usually operated under one or more of the following conditions.

- Frequent short trip driving less than 5 miles (8 km).
- Frequent driving in dusty conditions.
- Trailer towing or heavy load hauling.
- Frequent long periods of engine idling.
- Sustained high speed operation.
- Desert operation.
- Frequent starting and stopping.
- Cold climate operation.
- Off road driving.
- Commercial service.
- Snow plow operation.
- More than half of vehicle operation occurs in heavy city traffic during hot weather (above 90° F).

AT EACH STOP FOR GASOLINE

- Check engine oil level and add as required.
- Check windshield washer solvent and add as required.

ONCE A MONTH

- Check tire pressure and look for unusual tire wear or damage.
- Check fluid levels of coolant reservoir, brake master cylinder, power steering and transmission. Add fluid as required.
- Check all lights and other electrical items for correct operation.
- Inspect battery and clean and tighten terminals as required.
- Check rubber seals on each side of the radiator for proper fit.

AT EACH OIL CHANGE

- Inspect exhaust system.
- Inspect brake hoses.
- Rotate the tires at each oil change interval shown on Schedule—A: (7,500 Miles) or every other interval shown on Schedule—B: (6,000 Miles).
- Check engine coolant level, hoses, and clamps.
- Lubricate 4x4 steering linkage.
- Lubricate propeller shaft universal joints and slip spline, if equipped.

After completion of off-road (4WD) operation, the underside of the vehicle should be thoroughly inspected. Examine threaded fasteners for looseness.

HARSH SURFACE ENVIRONMENTS

After vehicle operation in a harsh surface environment, the following components should be inspected and cleaned as soon as possible:

- Brake drums.
- Brake linings.
- Front wheel bearings (2WD vehicles only).
- Axle coupling joints.

This will prevent wear and/or unpredictable brake action.

EMISSION CONTROL SYSTEM MAINTENANCE

The schedule emission maintenance listed in **bold type** on the following schedules, must be done at the mileage specified to assure the continued proper functioning of the emission control system. These, and all other maintenance services included in this manual, should be done to provide the best vehicle performance and reliability. More frequent maintenance may be needed for vehicles in severe operating conditions such as dusty areas and very short trip driving.

SCHEDULE—A

7,500 MILES (12 000 KM) OR AT 6 MONTHS

- Change engine oil.
- Replace engine oil filter.
- Lubricate steering linkage (4x4).

15,000 MILES (24 000 KM) OR AT 12 MONTHS

- Change engine oil.
- Replace engine oil filter.
- Lubricate steering linkage.

22,500 MILES (36 000 KM) OR AT 18 MONTHS

- Change engine oil.
- Replace engine oil filter.
- Lubricate steering linkage (4x4).
- Inspect brake linings.

30,000 MILES (48 000 KM) OR AT 24 MONTHS

- **Replace air cleaner element.**
- **Replace spark plugs.**
- Adjust belt tension on non-automatic tensioning drive belts.
- Change engine oil.
- Replace engine oil filter.
- Lubricate steering linkage.
- Drain and refill automatic transmission.
- Drain and refill transfer case.

37,500 MILES (60 000 KM) OR AT 30 MONTHS
- Change engine oil.
- Replace engine oil filter.
- Lubricate steering linkage (4x4).
- Drain and refill manual transmission.

45,000 MILES (72 500 KM) OR AT 36 MONTHS
- Change engine oil.
- Replace engine oil filter.
- Lubricate steering linkage.
- Inspect brake linings.
- Flush and replace engine coolant, regardless of mileage.

52,500 MILES (84 500 KM) OR AT 42 MONTHS
- Change engine oil.
- Replace engine oil filter.
- Lubricate steering linkage (4x4).
- Flush and replace engine coolant if not done at 36 months.

60,000 MILES (96 500 KM) OR AT 48 MONTHS
- **Replace air cleaner element.**
- **Replace distributor cap and rotor.**
- **Replace ignition wires.**
- **Replace spark plugs.**
- Adjust or replace drive belts.
- Change engine oil.
- Replace engine oil filter.
- Replace fuel filter. (See Note #1)
- Lubricate steering linkage.
- Drain and refill automatic transmission.
- Drain and refill transfer case.

67,500 MILES (108 500 KM) OR AT 54 MONTHS
- Change engine oil.
- Replace engine oil filter.
- Lubricate steering linkage (4x4).
- Inspect brake linings.

75,000 MILES (120 500 KM) OR AT 60 MONTHS
- Change engine oil.
- Replace engine oil filter.
- Lubricate steering linkage.
- Drain and refill manual transmission.
- Flush and replace engine coolant if it has been 30,000 miles (48 000 km) or 24 months since last change.

82,500 MILES (133 000 KM) OR AT 66 MONTHS
- Change engine oil.
- Replace engine oil filter.
- Lubricate steering linkage (4x4).
- Flush and replace engine coolant if it has been 30,000 miles (48 000 km) or 24 months since last change.

90,000 MILES (145 000 KM) OR AT 72 MONTHS
- **Replace air cleaner element.**
- **Replace spark plugs.**
- Adjust drive belts.
- Change engine oil.
- Replace engine oil filter.
- Lubricate steering linkage.
- Inspect brake linings.
- Drain and refill automatic transmission.
- Drain and refill transfer case.

97,500 MILES (157 000 KM) OR AT 78 MONTHS
- Change engine oil.
- Replace engine oil filter.
- Lubricate steering linkage (4x4).

105,000 MILES (169 000 KM) OR AT 84 MONTHS
- Change engine oil.
- Replace engine oil filter.
- Lubricate steering linkage.
- Flush and replace engine coolant if it has been 30,000 miles (48 000 km) or 24 months since last change.

112,500 MILES (181 000 KM) OR AT 90 MONTHS
- Change engine oil.
- Replace engine oil filter.
- Lubricate steering linkage (4x4).
- Inspect brake linings.
- Drain and refill manual transmission.
- Flush and replace engine coolant if it has been 30,000 miles (48 000 km) or 24 months since last change.

120,000 MILES (193 000 KM) OR AT 96 MONTHS
- **Replace air cleaner element.**
- **Replace distributor cap and rotor.**
- Lubricate steering linkage.
- Drain and refill automatic transmission.
- Drain and refill transfer case.
- **Replace ignition wires.**
- **Replace spark plugs.**
- Adjust or replace drive belts.
- Change engine oil.
- Replace engine oil filter.
- Replace fuel filter. (See note #1)

SCHEDULE—B

3,000 MILES (4 800KM)
- Change engine oil.
- Replace engine oil filter.

6,000 MILES (9 600KM)
- Change engine oil.
- Replace engine oil filter.
- Lubricate steering linkage (4x4).

9,000 MILES (14 400KM)
- Change engine oil.
- Replace engine oil filter.

12,000 MILES (19 200KM)
- Change engine oil.
- Replace engine oil filter.
- Drain and refill automatic transmission.
- Change front and rear axle fluid.*
- Lubricate steering linkage (4x4).
- Inspect brake linings.

15,000 MILES (24 000KM)
- Change engine oil.
- Replace engine oil filter.
- Lubricate steering linkage (4x2).
- Inspect air cleaner element, replace as necessary.

18,000 MILES (29 000KM)
- Change engine oil.
- Replace engine oil filter.
- Drain and refill Manual transmission fluid.
- Lubricate steering linkage (4x4).

21,000 MILES (34 000KM)
- Change engine oil.
- Replace engine oil filter.

24,000 MILES (38 000KM)
- Change engine oil.
- Replace engine oil filter.
- Lubricate steering linkage (4x4).
- Drain and refill automatic transmission.
- Change front and rear axle fluid.*
- Inspect brake linings.
- Inspect front wheel bearings, Clean and repack if required (4x2).

27,000 MILES (43 000KM)
- Change engine oil.
- Replace engine oil filter.

30,000 MILES (48 000KM)
- Change engine oil.
- Replace engine oil filter.
- Lubricate steering linkage joints.
- **Replace spark plugs.**
- **Replace air cleaner element.**
- Adjust drive belts.
- Drain and refill transfer case fluid.

33,000 MILES (53 000KM)
- Change engine oil.
- Replace engine oil filter.

36,000 MILES (58 000KM)
- Change engine oil.
- Replace engine oil filter.
- Lubricate steering linkage (4x4).
- Drain and refill automatic transmission.
- Drain and refill manual transmission fluid.
- Change front and rear axle fluid.*
- Inspect brake linings.

39,000 MILES (62 000KM)
- Change engine oil.
- Replace engine oil filter.

42,000 MILES (67 000KM)
- Change engine oil.
- Replace engine oil filter.
- Lubricate steering linkage (4x4).

45,000 MILES (72 000KM)
- Change engine oil.
- Replace engine oil filter.
- Lubricate steering linkage (4x2).
- Inspect air cleaner element, replace as necessary.

48,000 MILES (77 000KM)
- Change engine oil.
- Replace engine oil filter.
- Lubricate steering linkage (4x4).
- Drain and refill automatic transmission.
- Change front and rear axle fluid.*
- Inspect brake linings.

51,000 MILES (82 000KM)
- Change engine oil.
- Replace engine oil filter.
- Flush and replace engine coolant.

54,000 MILES (86 400KM)
- Change engine oil.
- Replace engine oil filter.
- Lubricate steering linkage (4x4).
- Drain and refill Manual transmission fluid.

57,000 MILES (91 000KM)
- Change engine oil.
- Replace engine oil filter.

60,000 MILES (96 000KM)
- Change engine oil.
- Replace engine oil filter.
- Lubricate steering linkage joints.
- **Replace spark plugs.**

- Drain and refill automatic transmission fluid.
- Change front and rear axle fluid.*
- **Replace air cleaner element.**
- **Replace distributor cap and rotor.**
- **Replace ignition wires.**
- Adjust or replace drive belts.
- Replace fuel filter. See note #1.
- Inspect brake linings.
- Drain and refill transfer case.

63,000 MILES (102 000KM)
- Change engine oil.
- Replace engine oil filter.

66,000 MILES (105 600KM)
- Change engine oil.
- Replace engine oil filter.
- Lubricate steering linkage (4x4).

69,000 MILES (110 000KM)
- Change engine oil.
- Replace engine oil filter.

72,000 MILES (115 200KM)
- Change engine oil.
- Replace engine oil filter.
- Lubricate steering linkage (4x4).
- Drain and refill Manual transmission fluid.
- Drain and refill automatic transmission.
- Change front and rear axle fluid.*
- Inspect brake linings.

75,000 MILES (120 000KM)
- Change engine oil.
- Replace engine oil filter.
- Lubricate steering linkage (4x2).
- Inspect air cleaner element, replace as necessary.

78,000 MILES (125 000KM)
- Change engine oil.
- Replace engine oil filter.
- Lubricate steering linkage (4x4).

81,000 MILES (130 000KM)
- Change engine oil.
- Replace engine oil filter.
- Flush and replace engine coolant.

84,000 MILES (134 400KM)
- Change engine oil.
- Replace engine oil filter.
- Lubricate steering linkage (4x4).
- Drain and refill automatic transmission fluid.
- Change front and rear axle fluid.*
- Inspect brake linings.

87,000 MILES (140 000KM)
- Change engine oil.
- Replace engine oil filter.

90,000 MILES (144 000KM)
- Change engine oil.
- Replace engine oil filter.
- Lubricate steering linkage.
- **Replace spark plugs.**
- Drain and refill Manual transmission fluid.
- **Replace air cleaner element.**
- Adjust drive belts.
- Drain and refill transfer case fluid.

93,000 MILES (149 000KM)
- Change engine oil.
- Replace engine oil filter.

96,000 MILES (154 000KM)
- Change engine oil.
- Replace engine oil filter.
- Lubricate steering linkage (4x4).
- Drain and refill automatic transmission fluid.
- Change front and rear axle fluid.*
- Inspect brake linings.

99,000 MILES (158 400KM)
- Change engine oil.
- Replace engine oil filter.

102,000 MILES (163 000KM)
- Change engine oil.
- Replace engine oil filter.
- Lubricate steering linkage (4x4).

105,000 MILES (168 000KM)
- Change engine oil.
- Replace engine oil filter.
- Inspect air cleaner element, replace as necessary.
- Lubricate steering linkage (4x2).

108,000 MILES (172 800KM)
- Change engine oil.
- Replace engine oil filter.
- Lubricate steering linkage (4x4).
- Drain and refill Manual transmission fluid.
- Drain and refill automatic transmission fluid.
- Change front and rear axle fluid.*
- Inspect brake linings.

111,000 MILES (177 600KM)
- Change engine oil.
- Replace engine oil filter.
- Flush and replace engine coolant.

114,000 MILES (182 400KM)
- Change engine oil.
- Replace engine oil filter.
- Lubricate steering linkage (4x4).

117,000 MILES (187 200KM)
- Change engine oil.
- Replace engine oil filter.

120,000 MILES (192 000KM)

- Change engine oil.
- Replace engine oil filter.
- Lubricate steering linkage.
- **Replace spark plugs.**
- Drain and refill automatic transmission fluid.
- Change front and rear axle fluid.*
- Inspect brake linings.
- **Replace air cleaner element.**
- **Replace distributor cap and rotor.**
- **Replace ignition wires.**
- Adjust or replace drive belts.
- Replace fuel filter. See note #1.
- Drain and refill transfer case fluid.

NOTE 1: Not required for California vehicles, recommended for proper vehicle performance.

* Off-highway operation, trailer towing, taxi, limousine, bus, snow plowing, or other types of commercial service or prolonged operation with heavy loading, especially in hot weather, require front and rear axle service indicated with a * in Schedule—B. Perform these services if you usually operate your vehicle under these conditions.

Inspection and service should also be performed anytime a malfunction is observed or suspected.

JUMP STARTING, TOWING AND HOISTING

INDEX

	page
Four-Wheel-Drive Vehicle Towing	12
Ground Clearance and Ramp Angle	11
Hoisting Recommendations	10
Jump Starting Procedure	9
Towing Recommendations	10
Towing When Keys Are Not Available	13
Two-Wheel-Drive Vehicle Towing—XJ	11

JUMP STARTING PROCEDURE

WARNING: DO NOT ATTEMPT TO PUSH OR TOW A VEHICLE TO START THE ENGINE. UNBURNED FUEL COULD ENTER THE EXHAUST CATALYTIC CONVERTER AND IGNITE AFTER THE ENGINE IS STARTED. THIS COULD CAUSE THE CONVERTER TO OVERHEAT AND RUPTURE.

WARNING: REVIEW ALL SAFETY PRECAUTIONS AND WARNINGS IN GROUP 8A, BATTERY/STARTING/CHARGING SYSTEMS DIAGNOSTICS.

DO NOT JUMP START A FROZEN BATTERY, PERSONAL INJURY CAN RESULT.

DO NOT JUMP START WHEN MAINTENANCE FREE BATTERY INDICATOR DOT IS YELLOW OR BRIGHT COLOR.

DO NOT JUMP START A VEHICLE WHEN THE BATTERY FLUID IS BELOW THE TOP OF LEAD PLATES.

DO NOT ALLOW JUMPER CABLE CLAMPS TO TOUCH EACH OTHER WHEN CONNECTED TO A BOOSTER SOURCE.

DO NOT USE OPEN FLAME NEAR BATTERY.

REMOVE METALLIC JEWELRY WORN ON HANDS OR WRISTS TO AVOID INJURY BY ACCIDENTAL ARCING OF BATTERY CURRENT.

WHEN USING A HIGH OUTPUT BOOSTING DEVICE, DO NOT ALLOW BATTERY VOLTAGE TO EXCEED 16 VOLTS. REFER TO INSTRUCTIONS PROVIDED WITH DEVICE BEING USED.

CAUTION: When using another vehicle as a booster, do not allow vehicles to touch. Electrical systems can be damaged on either vehicle.

TO JUMP START A DISABLED VEHICLE:

(1) Raise hood on disabled vehicle and visually inspect engine compartment for:

- Battery cable clamp condition, clean if necessary.
- Frozen battery.
- Yellow or bright color test indicator, if equipped.
- Low battery fluid level.
- Generator drive belt condition and tension.
- Fuel fumes or leakage, correct if necessary.

CAUTION: If the cause of starting problem on disabled vehicle is severe, damage to booster vehicle charging system can result.

(2) When using another vehicle as a booster source, turn off all accessories, place gear selector in park or neutral, set park brake and operate engine at 1200 rpm.

(3) On disabled vehicle, place gear selector in park or neutral and set park brake. Turn off all accessories.

(4) Connect jumper cables to booster battery. RED clamp to positive terminal (+). BLACK clamp to negative terminal (-). DO NOT allow clamps at opposite end of cables to touch, electrical arc will result. Review all warnings in this procedure.

(5) On disabled vehicle, connect RED jumper cable clamp to positive (+) terminal. Connect BLACK jumper cable clamp to engine ground as close to the ground cable attaching point as possible (Fig. 1).

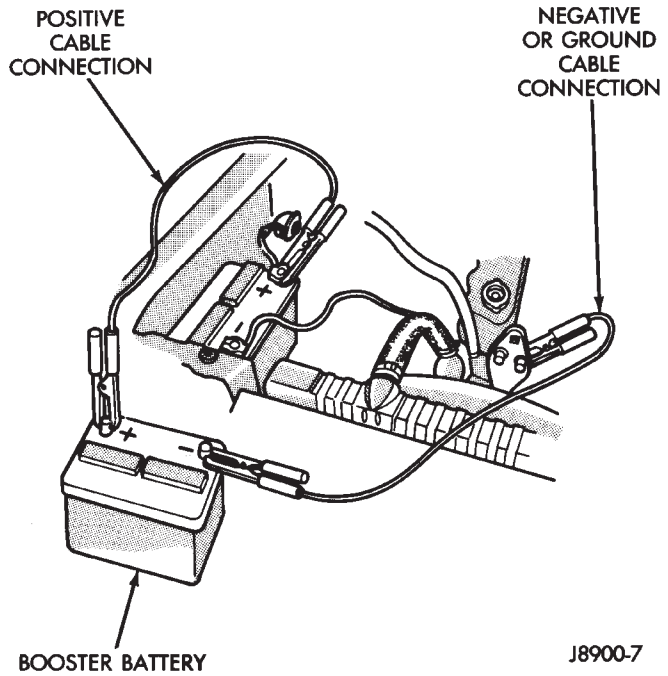

Fig. 1 Jumper Cable Connections—Typical

CAUTION: Do not crank starter motor on disabled vehicle for more than 15 seconds, starter will overheat and could fail.

(6) Allow battery in disabled vehicle to charge to at least 12.4 volts (75%charge) before attempting to start engine. If engine does not start within 15 seconds, stop cranking engine and allow starter to cool (15 min.), before cranking again.

DISCONNECT CABLE CLAMPS AS FOLLOWS:

- Disconnect BLACK cable clamp from engine ground on disabled vehicle.
- When using a Booster vehicle, disconnect BLACK cable clamp from battery negative terminal. Disconnect RED cable clamp from battery positive terminal.
- Disconnect RED cable clamp from battery positive terminal on disabled vehicle.

PORTABLE STARTING UNIT

There are many types of portable starting units available for starting engines. Follow the manufacturer's instructions and observe the listed precautions when involved in any engine starting procedure.

HOISTING RECOMMENDATIONS

Refer to the Owner's Manual for emergency vehicle lifting procedures.

FLOOR JACK

When properly positioned, a floor jack can be used to lift a Jeep vehicle (Fig. 2 and 3). Support the vehicle in the raised position with jack stands at the front and rear ends of the frame rails.

CAUTION: Do not attempt to lift a Jeep vehicle with a floor jack positioned under:

- An axle tube.
- A body side sill.
- A steering linkage component.
- A drive shaft.
- The engine or transmission oil pan.
- The fuel tank.
- A front suspension arm.

Use the correct sub-frame rail or frame rail lifting locations only (Fig. 2 and 3).

HOIST

A vehicle can be lifted with:

- A single-post, frame-contact hoist.
- A twin-post, chassis hoist.
- A ramp-type, drive-on hoist.

When a frame-contact type hoist is used, verify that the lifting pads are positioned properly (Fig. 2 and 3).

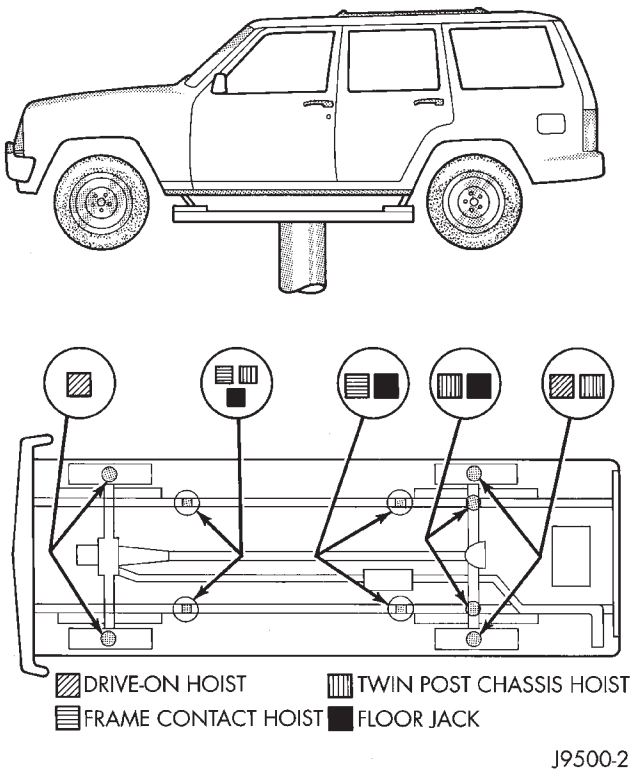

Fig. 2 Vehicle Lifting Locations—Typical

WARNING: THE HOISTING AND JACK LIFTING POINTS PROVIDED ARE FOR A COMPLETE VEHICLE. WHEN A CHASSIS OR DRIVETRAIN COMPONENT IS REMOVED FROM A VEHICLE, THE CENTER OF GRAVITY IS ALTERED MAKING SOME HOISTING CONDITIONS UNSTABLE. PROPERLY SUPPORT OR SECURE VEHICLE TO HOISTING DEVICE WHEN THESE CONDITIONS EXIST.

TOWING RECOMMENDATIONS

A vehicle equipped with SAE approved sling-type towing equipment can be used to tow all Jeep vehicles. When towing a 4WD vehicle using a wheel-lift towing device, use a tow dolly under the opposite end of the vehicle. A vehicle with flat-bed device can also be used to transport a disabled vehicle (Fig. 4).

A wooden crossbeam may be required for proper connection when using the sling-type, front-end towing method.

SAFETY PRECAUTIONS

- Secure loose and protruding parts.
- Always use a safety chain system that is independent of the lifting and towing equipment.
- Do not allow towing equipment to contact the disabled vehicle's fuel tank.
- Do not allow anyone under the disabled vehicle while it is lifted by the towing device.

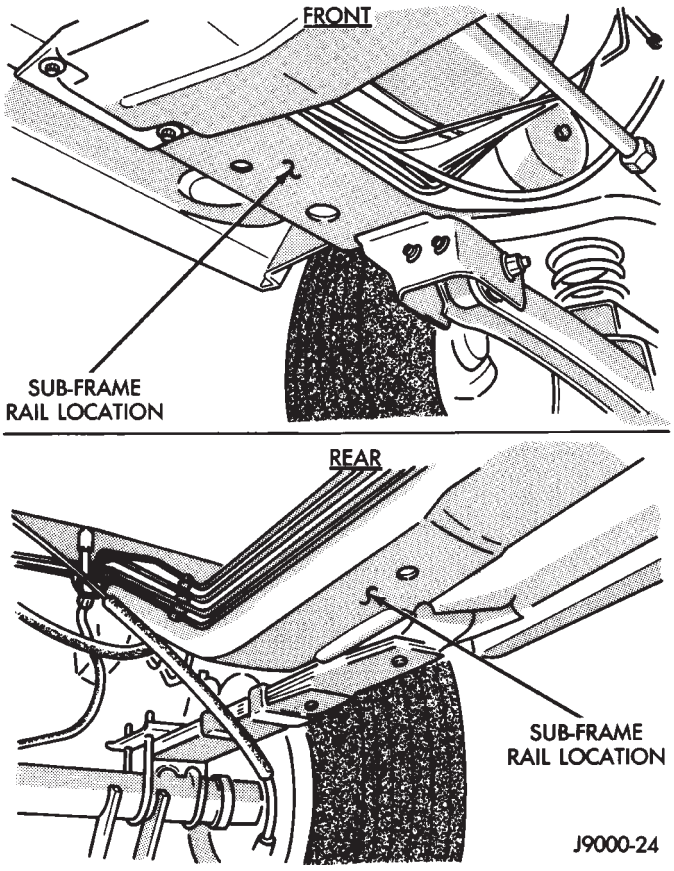

Fig. 3 Correct Vehicle Lifting Locations—Typical

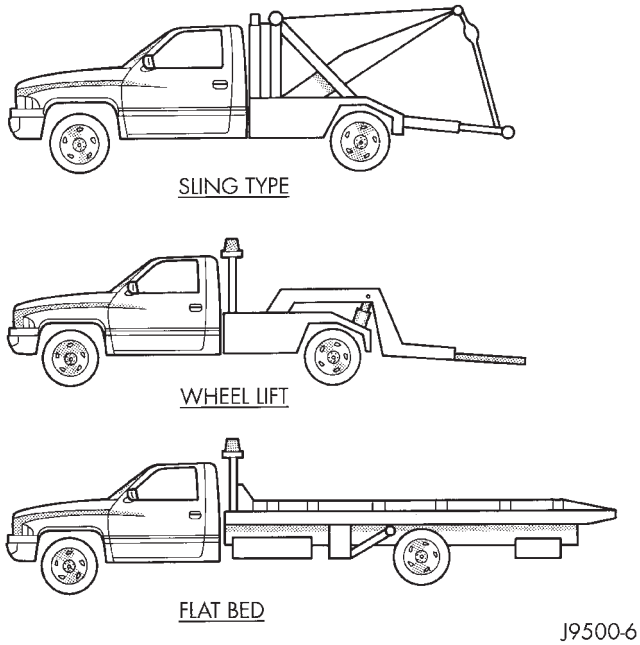

Fig. 4 Tow Vehicles With Approved Equipment.

- Do not allow passengers to ride in a vehicle being towed.
- Always observe state and local laws regarding towing regulations.
- Do not tow a vehicle in a manner that could jeopardize the safety of the operator, pedestrians or other motorists.
- Do not attach tow chains, T-hooks, J-hooks, or a tow sling to a bumper, steering linkage, drive shafts or a non-reinforced frame hole.

GROUND CLEARANCE AND RAMP ANGLE

GROUND CLEARANCE

CAUTION: If vehicle is towed with wheels removed, install lug nuts to retain brake drums.

A towed vehicle should be raised until lifted wheels are a minimum 100 mm (4 in) from the ground. Be sure there is adequate ground clearance at the opposite end of the vehicle, especially when towing over rough terrain or steep rises in the road. If necessary, remove the wheels from the lifted end of the vehicle and lower the vehicle closer to the ground, to increase the ground clearance at the opposite end of the vehicle. Install lug nuts on wheel attaching studs to retain brake drums.

FLAT-BED TOWING RAMP ANGLE

If a vehicle with flat-bed towing equipment is used, the approach ramp angle should not exceed 15 degrees.

TWO-WHEEL-DRIVE VEHICLE TOWING—XJ

Chrysler Corporation recommends that a vehicle be towed with the rear end lifted, whenever possible.

TOWING-REAR END LIFTED (SLING-TYPE)

CAUTION: Do not use steering column lock to secure steering wheel during towing operation.

2WD XJ vehicles can be towed with the front wheels on the surface for extended distances at speeds not exceeding 48 km/h (30 mph).

(1) Attach J-hooks around the axle shaft tube outboard of the shock absorber.

(2) Place the sling crossbar under and forward of the bumper.

(3) Attach safety chains around the frame rails.

(4) Turn the ignition switch to the OFF position to unlock the steering wheel.

(5) Secure steering wheel in the straight ahead position with a clamp device designed for towing.

(6) Verify that steering components are in good condition.

(7) Shift the transmission to NEUTRAL.

TOWING-FRONT END LIFTED (SLING-TYPE)

CAUTION: Many vehicles are equipped with air dams, spoilers, and/or ground effect panels. To avoid component damage, a wheel-lift towing vehicle or a flat-bed hauling vehicle is recommended.

If a 2WD XJ vehicle cannot be towed with the rear wheels lifted, it can be towed with the front wheels lifted.

(1) Attach a J-hook to the disabled vehicle at the left side of the axle.

(2) Position the sling crossbar close to the J-hook and below the front bumper.

(3) Secure a chain to the right side of vehicle by placing it over the axle shaft tube and attaching it to a structural member (Fig. 5).

(4) Attach the safety chains to the vehicle.

(5) Turn the ignition switch to the OFF position to unlock the steering wheel.

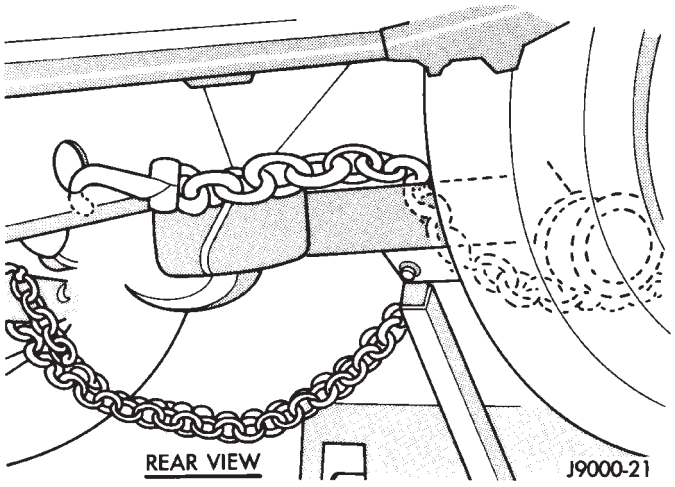

Fig. 5 Sling-Type, Front-End Towing (XJ Rear View)

2WD-AUTOMATIC TRANSMISSION

Provided the transmission is operable, tow only in **NEUTRAL** at speeds not to exceed 30 mph (50 km/h) and distances less than 15 miles (25km/h).

If the vehicle is to be towed more than 15 miles, the propeller shaft should be disconnected or place tow dollies under rear wheels.

2WD-MANUAL TRANSMISSION

To reduce the possible damage of transmission components, the propeller shaft must be removed or place tow dollies under the rear wheels before towing. Refer to Propeller Shafts, Group 16 for proper removal procedure.

FOUR-WHEEL-DRIVE VEHICLE TOWING

Chrysler Corporation recommends that a vehicle be transported on a flat-bed device. A Wheel-lift or Sling-type device can be used provided all the wheels are lifted off the ground using tow dollies.

TOWING-REAR END LIFTED (SLING-TYPE)

4WD XJ VEHICLES

(1) Raise the front of the vehicle off the ground and install tow dollies under front wheels.

(2) Attach J-hooks around the rear axle shaft tube outboard of the shock absorber.

(3) Place the sling crossbar under and forward of the bumper.

(4) Attach safety chains around the frame rails.

(5) Turn the ignition switch to the OFF position to unlock the steering wheel.

(6) Secure steering wheel in the straight ahead position with a clamp device designed for towing.

(7) Shift the transfer case to NEUTRAL.

4WD YJ VEHICLES

Use Wheel-Lift equipment and Tow Dollies when towing from the rear end of the vehicle.

TOWING-FRONT END LIFTED (SLING-TYPE)

4WD XJ VEHICLES

(1) Raise the rear of the vehicle off the ground and install tow dollies under rear wheels.

(2) Attach a J-hook to the disabled vehicle at the left side of front the axle.

(3) Position the sling crossbar close to the J-hook and below the front bumper (Fig. 6).

(4) Secure a chain to the right side of vehicle by placing it over the axle shaft tube and attaching it to a structural member

(4) Attach the safety chains to the vehicle.

(5) Turn the ignition switch to the OFF position to unlock the steering wheel.

(6) Shift transfer case to NEUTRAL.

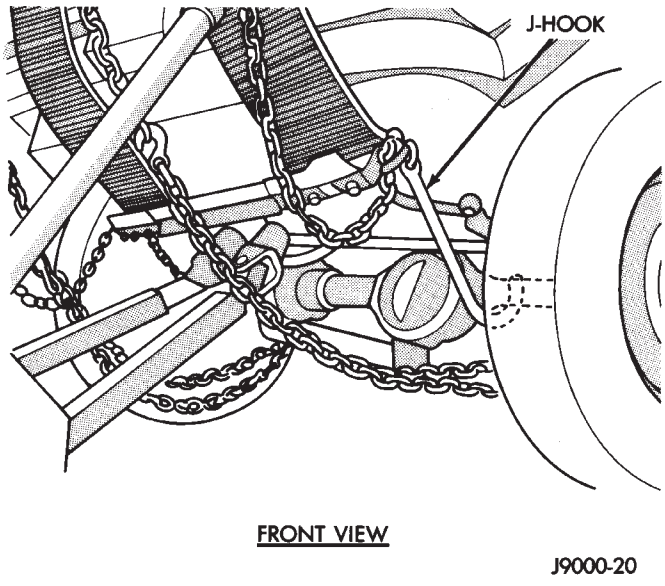

Fig. 6 Sling-Type, Front-End Towing (XJ Front View)

4WD YJ VEHICLES

(1) Raise the rear of the vehicle off the ground and install tow dollies under rear wheels.

CAUTION: Use tow chains with T-hooks for connecting to the disabled vehicle's frame rails. Never use J-hooks.

(2) Attach the T-hooks to the slots in the front end of each frame rail (Fig. 7).
(3) Position each safety chain over the top of each front spring and inboard of each front spring shackle.
(4) Double wrap each chain.
(5) Position the sling crossbar under the front bumper.
(6) Turn the ignition switch to the OFF position to unlock the steering wheel.
(7) Shift the transfer case to NEUTRAL.

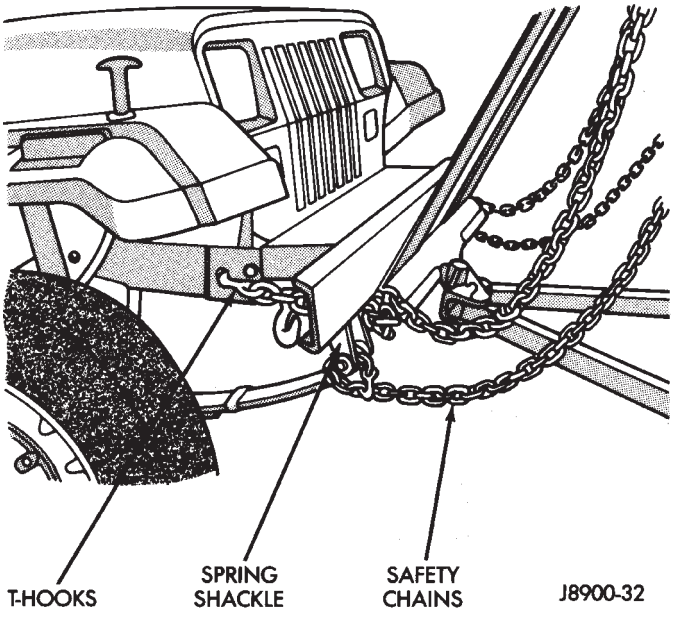

Fig. 7 Sling-Type, Front-End Towing (YJ Vehicles)

TOWING WHEN KEYS ARE NOT AVAILABLE

When the vehicle is locked and keys are not available, use a flat bed hauler. A Wheel-lift or Sling-type device can be used provided all the wheels are lifted off the ground using tow dollies (Fig. 8).

EMERGENCY TOW HOOKS

WARNING: REMAIN AT A SAFE DISTANCE FROM A VEHICLE THAT IS BEING TOWED VIA ITS TOW HOOKS. THE TOW STRAPS/CHAINS COULD BREAK AND CAUSE SERIOUS INJURY.

Some Jeep vehicles are equipped with front and rear emergency tow hooks (Fig. 9). The tow hooks should be used for **EMERGENCY** purposes only.

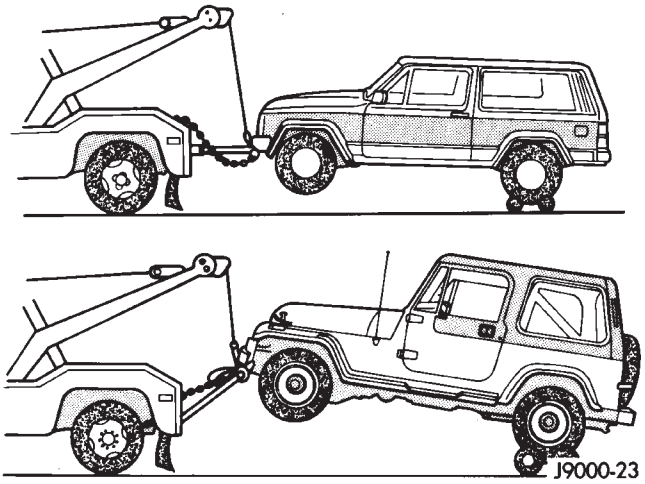

Fig. 8 Sling-Type, Front-End Towing With Rear Wheels On A Tow Dolly

CAUTION: DO NOT use emergency tow hooks for tow truck hook-up or highway towing.

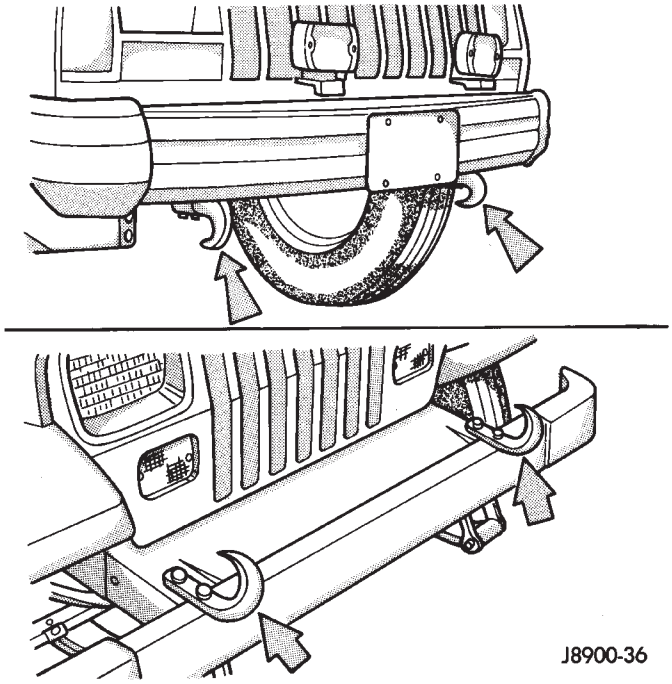

Fig. 9 Emergency Front Tow Hooks—XJ & YJ Vehicles

FLAT TOWING (4 TIRES/WHEELS ON SURFACE)

Tow a vehicle in this manner only when all four wheels will freely rotate. Prepare the vehicle according to the following procedures.

2WD VEHICLES

(1) Mark the drive shaft and the axle drive pinion gear shaft yoke for installation alignment reference.
(2) Remove the drive shaft. Install a protective covering over the drive shaft U-joints to retain them assembled and protected.

(3) Cover the open end of the transmission extension housing.

4WD VEHICLES—XJ

(1) Shift transfer case lever to NEUTRAL.
(2) Place ignition switch in the unlocked position.

4WD VEHICLES—YJ

CAUTION: Follow these steps to be certain that the transfer case is fully in N (NEUTRAL) and that the axle is completely disengaged before flat towing to prevent damage to internal parts.

(1) Shift transfer case into 2H and check that the 4WD light goes out.
(2) Start engine and drive the vehicle 3 mm (10 ft.) rearward and then 3 mm (10 ft.) forward to make sure the axle is disengaged.
(3) Shift transmission to Neutral.
(4) Turn off engine with the ignition key in the unlocked OFF position.
(5) Shift transfer case lever from 2H to N (NEUTRAL) position.
(6) Shift manual transmission into gear or automatic transmission into P (PARK).

WARNING: WITH THE TRANSFER CASE IN NEUTRAL POSITION, THE VEHICLE COULD ROLL UNEXPECTEDLY. THE PARKING BRAKE SHOULD ALWAYS BE APPLIED BEFORE THE TOW BAR IS ATTACHED.

(7) Attach vehicle to the tow vehicle with tow bar.

CAUTION: Do not use a bumper mounted clamp-on tow bar, damage to bumper face bar may occur.

ENGINE MAINTENANCE

INDEX

	page		page
Accessory Drive Belt	21	Engine Oil Change and Filter Replacement	16
Air Cleaner Element	18	Engine Oil Filter	17
Air-Conditioner Compressor	21	Engine Supports	21
Battery	20	Exhaust System	21
Crankcase Ventilation System	19	Fuel Filter	19
Emission Control System	20	Fuel Usage Statement—Gas Engines	19
Engine Break-In	15	Ignition Cables, Distributor Cap and Rotor	20
Engine Cooling System	18	Rubber and Plastic Component Inspection	20
Engine Oil	15	Spark Plugs	20

ENGINE BREAK-IN

CAUTION: Wide open throttle operation in low gears, before engine break-in period is complete, can damage engine.

After first starting a new engine, allow it to idle for 15 seconds before shifting into a drive gear. Also:

- Drive the vehicle at varying speeds less than 88 km/h (55 mph) for the first 480 km (300 miles).
- Avoid fast acceleration and sudden stops.
- Do not drive at full-throttle for extended periods of time.
- Do not drive at constant speeds.
- Do not idle the engine excessively.

A special break-in engine oil is not required. The original engine oil installed is a high quality, energy conserving lubricant. Special break-in oils are not recommended. These oils could interfere with the normal piston ring seating process.

New engines tend to consume more fuel and oil until after the break-in period has ended.

ENGINE OIL

WARNING: NEW OR USED ENGINE OIL CAN BE IRRITATING TO THE SKIN. AVOID PROLONGED OR REPEATED SKIN CONTACT WITH ENGINE OIL. CONTAMINANTS IN USED ENGINE OIL, CAUSED BY INTERNAL COMBUSTION, CAN BE HAZARDOUS TO YOUR HEALTH. THOROUGHLY WASH EXPOSED SKIN WITH SOAP AND WATER.

DO NOT WASH SKIN WITH GASOLINE, DIESEL FUEL, THINNER, OR SOLVENTS, HEALTH PROBLEMS CAN RESULT.

DO NOT POLLUTE, DISPOSE OF USED ENGINE OIL PROPERLY. CONTACT YOUR DEALER OR GOVERNMENT AGENCY FOR LOCATION OF COLLECTION CENTER IN YOUR AREA.

ENGINE OIL SPECIFICATION

CAUTION: Do not use non-detergent or straight mineral oil when adding or changing crankcase lubricant. Engine failure can result.

API SERVICE GRADE CERTIFIED

Use an engine oil that is API Service Grade Certified or an oil that conforms to the API Service Grade SH or SH/CD. MOPAR provides engine oils that conform to all of these service grades.

SAE VISCOSITY

An SAE viscosity grade is used to specify the viscosity grade of engine oil. SAE 30 specifies a single viscosity engine oil. Engine oils also have multiple viscosities. These are specified with a dual SAE viscosity grade which indicates the cold-to-hot temperature viscosity range. Select an engine oil that is best suited to your particular temperature range and variation (Fig.1).

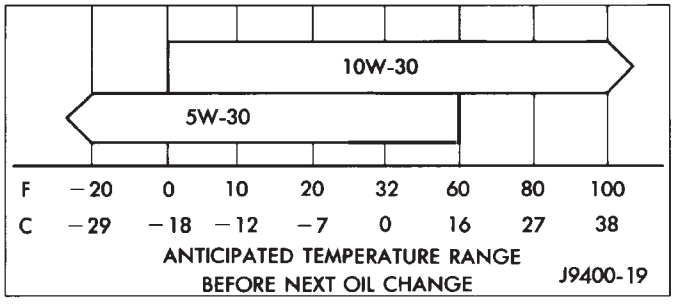

Fig. 1 Temperature/Engine Oil Viscosity

ENERGY CONSERVING OIL

An Energy Conserving type oil is recommeded for gasoline engines. They are designated as either ENERGY CONSERVING or ENERGY CONSERVING II.

CONTAINER IDENTIFICATION

Standard engine oil identification notations have been adopted to aid in the proper selection of engine oil. The identifying notations are located on the label of engine oil plastic bottles and the top of engine oil cans (Fig. 2).



9400-9

Fig. 2 API Certification Mark

ENGINE OIL ADDITIVES

In some instances, such as infrequent operation, short trip driving, and during break-in after a major overhaul, addition of special materials containing anti-rust and anti-scuff additives are beneficial. A suitable product for this purpose is MOPAR Engine Oil Supplement.

OIL LEVEL INDICATOR (DIPSTICK)

The engine oil level indicator (Dipstick) is located at the right rear of both 2.5L engines and 4.0L engines (Fig. 3).

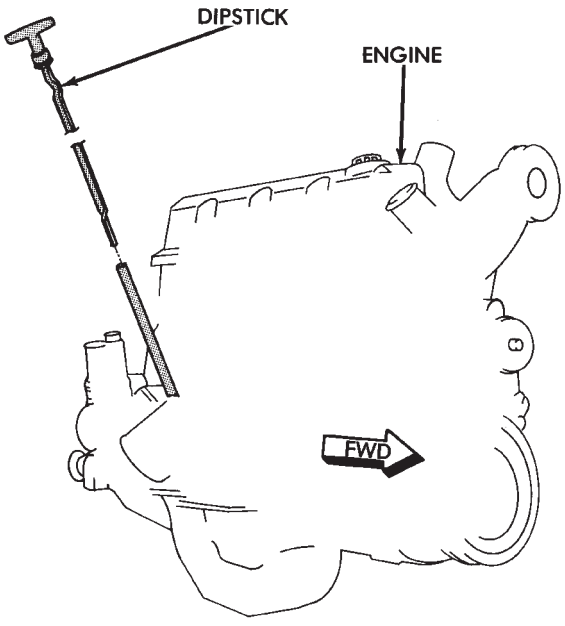

J9200-25

Fig. 3 Engine Oil Dipstick Location—Typical

CRANKCASE OIL LEVEL INSPECTION

CAUTION: Do not overfill crankcase with engine oil, oil foaming and oil pressure loss can result.

Inspect engine oil level approximately every 800 kilometers (500 miles). Unless the engine has exhibited loss of oil pressure, run the engine for about five minutes before checking oil level. Checking engine oil level on a cold engine is not accurate.

To ensure proper lubrication of an engine, the engine oil must be maintained at an acceptable level. The acceptable levels are indicated between the ADD and SAFE marks on the engine oil dipstick (Fig. 4 and 5).

(1) Position vehicle on level surface.

(2) With engine OFF, allow approximately ten minutes for oil to settle to bottom of crankcase, remove engine oil dipstick.

(3) Wipe dipstick clean.

(4) Install dipstick and verify it is seated in the tube.

(5) Remove dipstick, with handle held above the tip, take oil level reading (Figs.4 and 5).

(6) Add oil only if level is below the ADD mark on dipstick.

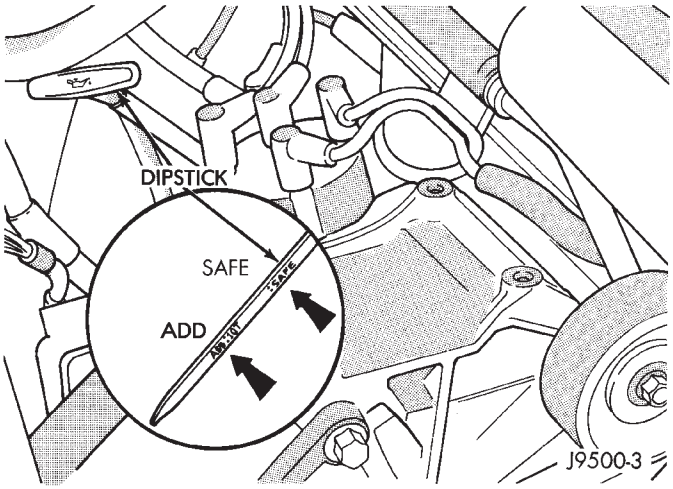

Fig. 4 Engine Oil Dipstick—2.5L Engine

ENGINE OIL CHANGE AND FILTER REPLACEMENT

ENGINE OIL CHANGE

Change engine oil at mileage and time intervals described in Maintenance Schedules.

TO CHANGE ENGINE OIL

Run engine until achieving normal operating temperature.

(1) Position the vehicle on a level surface and turn engine off.

(2) Hoist and support vehicle on safety stands. Refer to Hoisting and Jacking Recommendations in this group.

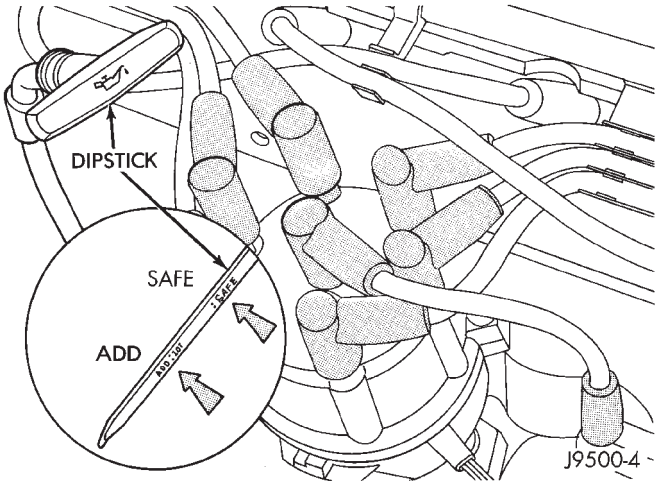

Fig. 5 Engine Oil Dipstick — 4.0L Engine

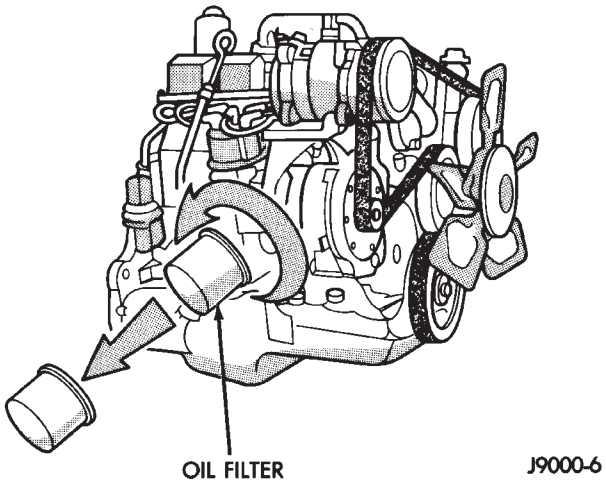

Fig. 6 Oil Filter—2.5L Engine

(3) Remove oil fill cap.

(4) Place a suitable drain pan under crankcase drain.

(5) Remove drain plug from crankcase and allow oil to drain into pan. Inspect drain plug threads for stretching or other damage. Replace drain plug and gasket if damaged.

(6) Install drain plug in crankcase.

(7) Lower vehicle and fill crankcase with specified type and amount of engine oil described in this section.

(8) Install oil fill cap.

(9) Start engine and inspect for leaks.

(10) Stop engine and inspect oil level.

ENGINE OIL FILTER

FILTER SPECIFICATION

CAUTION: Do not use oil filter with metric threads. The proper oil filter has SAE type 3/4 X 16 threads. An oil filter with metric threads can result in oil leaks and engine failure.

All Jeep engines are equipped with a high quality full-flow, throw-away type oil filter. Chrysler Corporation recommends a Mopar or equivalent oil filter be used.

OIL FILTER REMOVAL

(1) Position a drain pan under the oil filter.

(2) Using a suitable oil filter wrench loosen filter.

(3) Rotate the oil filter counterclockwise to remove it from the cylinder block oil filter boss (Fig. 6 and 7).

(4) When filter separates from adapter nipple, tip gasket end upward to minimize oil spill. Remove filter from vehicle.

(5) With a wiping cloth, clean the gasket sealing surface (Fig. 8) of oil and grime.

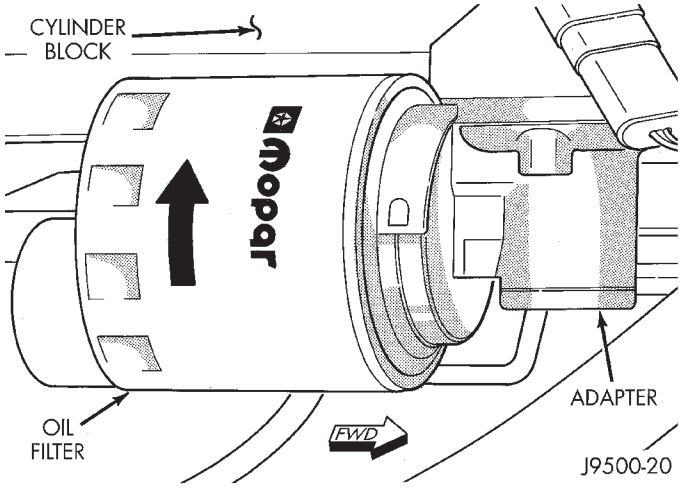

Fig. 7 Oil Filter — 4.0L Engine

OIL FILTER INSTALLATION

(1) Lightly lubricate oil filter gasket with engine oil or chassis grease.

(2) Thread filter onto adapter nipple. When gasket makes contact with sealing surface, (Fig. 8) hand tighten filter one full turn, do not over tighten.

(3) Add oil, verify crankcase oil level and start engine. Inspect for oil leaks.

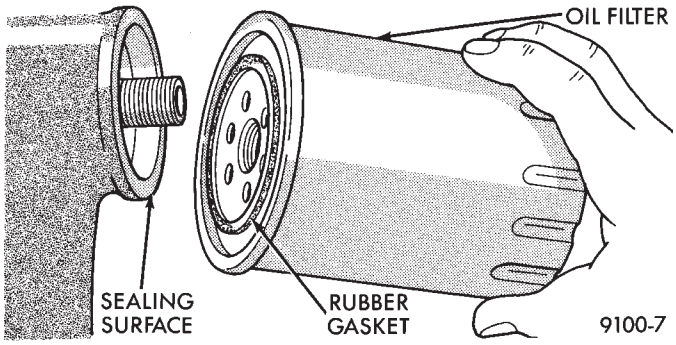

Fig. 8 Oil Filter Sealing Surface—Typical

USED ENGINE OIL DISPOSAL

Care should be exercised when disposing used engine oil after it has been drained from a vehicle engine. Refer to the WARNING listed above.

ENGINE COOLING SYSTEM

WARNINGS AND PRECAUTIONS

WARNING: ANTIFREEZE IS AN ETHYLENE GLYCOL BASE COOLANT AND IS HARMFUL IF SWALLOWED OR INHALED. IF SWALLOWED, DRINK TWO GLASSES OF WATER AND INDUCE VOMITING. IF INHALED, MOVE TO FRESH AIR AREA. SEEK MEDICAL ATTENTION IMMEDIATELY. DO NOT STORE IN OPEN OR UNMARKED CONTAINERS. WASH SKIN AND CLOTHING THOROUGHLY AFTER COMING IN CONTACT WITH ETHYLENE GLYCOL. KEEP OUT OF REACH OF CHILDREN.

DISPOSE OF GLYCOL BASE COOLANT PROPERLY, CONTACT YOUR DEALER OR GOVERNMENT AGENCY FOR LOCATION OF COLLECTION CENTER IN YOUR AREA.

DO NOT OPEN A COOLING SYSTEM WHEN THE ENGINE IS AT RUNNING TEMPERATURE, PERSONAL INJURY CAN RESULT.

AVOID RADIATOR COOLING FAN WHEN ENGINE COMPARTMENT RELATED SERVICE IS PERFORMED, PERSONAL INJURY CAN RESULT.

CAUTION: Do not use straight antifreeze as engine coolant, inadequate engine running temperatures can result.

Do not operate vehicle without proper concentration of recommended ethylene glycol coolant, high running temperatures and cooling system corrosion can result.

The engine cooling system will develop internal pressure of 97 to 123 kPa (14 to 18 psi) at normal operating temperature. Allow the vehicle approximately one half hour to cool off before opening the cooling system. As an indicator of pressure, squeeze the upper radiator hose between index finger and thumb. If it collapses with little effort the system would have low internal pressure and should be safe to open to the first safety notch of the radiator cap. Refer to Group 7, Cooling System.

COOLING SYSTEM INSPECTION

Coolant level should be inspected when other engine compartment service is performed or when coolant leak is suspected. With the engine at normal operating temperature, observe the coolant level in the **coolant recovery bottle**. The coolant level must be at least above the ADD mark and preferably at the FULL mark. Add coolant to the coolant recovery bottle **only**, if necessary.

Cooling system freeze protection should be tested at the onset of the winter season or every 12 months. Service is required if coolant is low, contaminated, rusty or freeze protection is inadequate. To properly test cooling system, see Group 7, Cooling System.

The cooling system factory fill is a mixture of 50% Ethylene Glycol based antifreeze and 50% water. Using a suitable hydrometer, measure antifreeze concentration in the radiator when the engine is cool. If the cooling system has recently been serviced, allow coolant to circulate for at least 20 minutes before taking hydrometer reading. Properly mixed coolant will protect the cooling system to -37°C (-35°F). If the freeze protection is above -28°C (-20°F), drain enough coolant from the cooling system to allow room to add antifreeze to achieve adequate protection. A mix table on the coolant container indicates the amount of antifreeze required to winterize the cooling system based on the capacity, see Capacity Chart in General Information section of this group.

ANTIFREEZE SPECIFICATION

Chrysler Corporation recommends the use of Mopar Antifreeze/Coolant or a high quality, ethylene glycol base antifreeze/coolant, with a silicate inhibitor.

COOLING SYSTEM SERVICE

The cooling system should be drained, flushed and filled with the proper coolant mixture at the intervals described in the Lubrication and Maintenance Schedules. Refer to General Information section of this group. For proper service instructions see Group 7, Cooling System.

AIR CLEANER ELEMENT

The air cleaner element should be serviced at the intervals described in the Lubrication and Maintenance Schedules sections of this group. Additional information can be found in Group 14, Fuel System and Group 25, Emission System. Inspect all air cleaner hoses or tubes for damage or leaks when other engine compartment service is performed. Replace faulty components.

FILTER ELEMENT SERVICE/REPLACEMENT

CAUTION: The air cleaner cover must be installed properly for the emissions system and engine controller to function correctly.

Do not immerse paper air filter element in cleaning solvents, damage can result.

(1) Remove the air cleaner cover from the body/housing (Fig. 9).

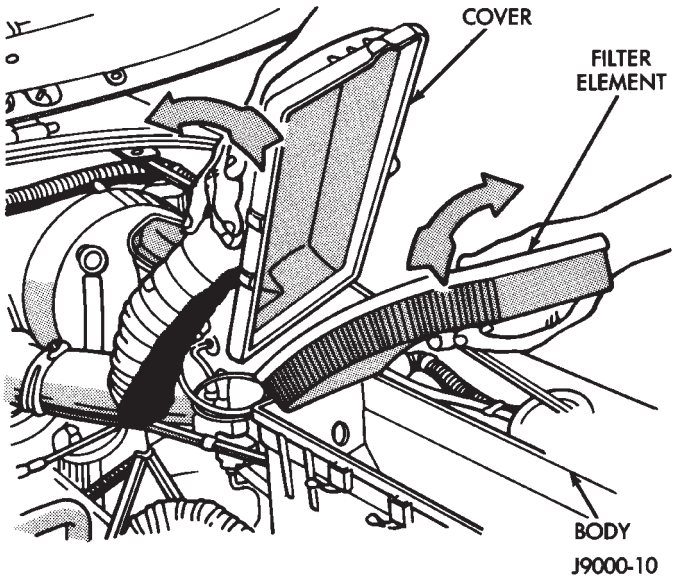

Fig. 9 Air Cleaner & Filter Element—2.5L and 4.0L Engines

(2) Remove the air cleaner element from the body/housing.

(3) Hold a shop light on throttle body side of element. Inspect air intake side of element. If element is saturated with oil or light is not visible, replace filter. If element is saturated with oil, perform crankcase ventilation system tests.

(4) Wash the air cleaner cover and body/housing (Fig. 10) with cleaning solvent and wipe dry.

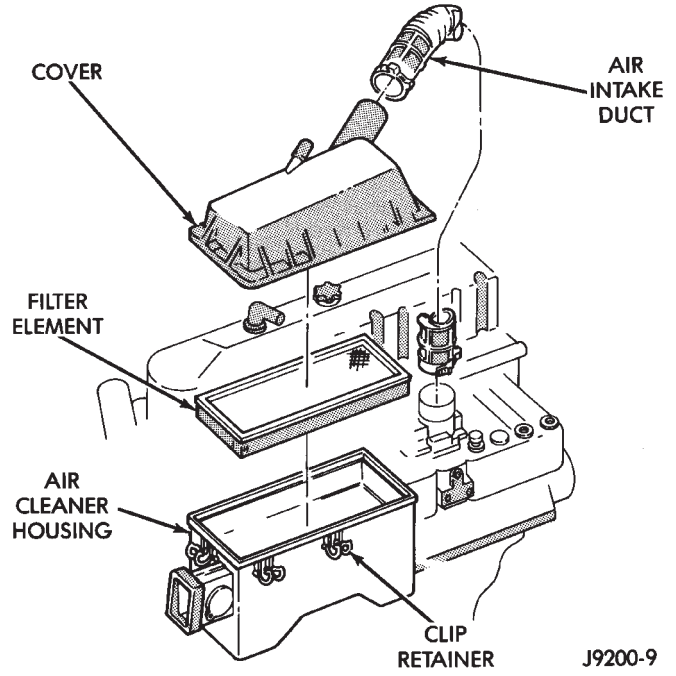

Fig. 10 Air Cleaner Body/Housing & Cover

(5) Install the air cleaner element and attach the cover to the body/housing.

CRANKCASE VENTILATION SYSTEM

All Jeep 2.5L and 4.0L engines are equipped with a crankcase ventilation (CCV) system. Refer to Group 25 Emissions, for additional information.

FUEL FILTER

The fuel filter requires service only when a fuel contamination problem is suspected. For proper diagnostic and service procedures refer to Group 14, Fuel System.

FUEL USAGE STATEMENT—GAS ENGINES

Jeep vehicles are designed to meet all emission regulations and provide excellent fuel economy using high quality unleaded gasoline. Only use unleaded gasolines having a minimum posted octane of 87.

If a Jeep vehicle develops occasional light spark knock (ping) at low engine speeds, this is not harmful. However, **continued heavy knock at high speeds can cause damage and should be checked immediately.**

In addition to using unleaded gasoline with the proper octane rating, **those that contain detergents, corrosion and stability additives are recommended.** Using gasolines that have these additives will help improve fuel economy, reduce emissions and maintain vehicle performance.

Poor quality gasoline can cause problems such as hard starting, stalling and stumble. If these problems occur, use another brand of gasoline before considering servicing the vehicle.

GASOLINE/OXYGENATE BLENDS

Some fuel suppliers blend unleaded gasoline with materials that contain oxygen such as alcohol, MTBE and ETBE. The type and amount of oxygenate used in the blend is important. The following are generally used in gasoline blends:

ETHANOL

Ethanol (Ethyl or Grain Alcohol) properly blended, is used as a mixture of 10 percent ethanol and 90 percent gasoline. **Gasoline with ethanol may be used in your vehicle.**

METHANOL

CAUTION: Do not use gasolines containing methanol. Use of methanol/gasoline blends may result in starting and driveability problems. In addition, damage may be done to critical fuel system components.

Methanol (Methyl or Wood Alcohol) is used in a variety of concentrations blended with unleaded gaso-

line. You may encounter fuels containing 3 percent or more methanol along with other alcohols called cosolvents.

Problems that are the result of using methanol/gasoline blends are not the responsibility of Chrysler Corporation. They may not be covered by the vehicle warranty.

MTBE/ETBE

Gasoline and MTBE (Methyl Tertiary Butyl Ether) blends are a mixture of unleaded gasoline and up to 15 percent MTBE. Gasoline and ETBE (Ethyl Tertiary Butyl Ether) are blends of gasoline and up to 17 percent ETBE. Gasoline blended with MTBE or ETBE may be used.

CLEAN AIR GASOLINE

Many gasolines are now being blended that contribute to cleaner air, especially in those areas of the country where air pollution levels are high. These new blends provide a cleaner burning fuel and some are referred to as **Reformulated Gasoline**.

In areas of the country where carbon monoxide levels are high, gasolines are being treated with oxygenated materials such as MTBE, ETBE and ethanol.

Chrysler Corporation supports these efforts toward cleaner air and recommends the use of these gasolines as they become available.

IGNITION CABLES, DISTRIBUTOR CAP AND ROTOR

Inspect and test ignition cables, distributor cap and rotor when the spark plugs are replaced. Oil and grime should be cleaned from the ignition cables and distributor cap to avoid possible spark plug fouling. Mopar Foamy Engine Degreaser or equivalent is recommended for cleaning the engine compartment. For proper service and diagnostic procedures refer to Group 8D, Ignition System.

IGNITION TIMING

The ignition timing for 2.5L and 4.0L engines is not adjustable. Refer to the specifications listed on the engine Emission Control Information Label. Refer to Group 25, Emission Control Systems for additional information.

SPARK PLUGS

Ignition spark plugs should be replaced at the mileage interval described in the Lubrication and Maintenance Schedules. Refer to the General Information section of this group. For proper service procedures refer to Group 8D, Ignition Systems.

BATTERY

WARNING: WEAR SAFETY GLASSES, RUBBER GLOVES AND PROTECTIVE CLOTHING WHEN HANDLING/SERVICING A BATTERY. THE BATTERY ELECTROLYTE CONTAINS SULFURIC ACID AND WILL CAUSE HARM IF IT CONTACTS SKIN, EYES OR CLOTHING. IT WILL ALSO DAMAGE PAINTED (AS WELL AS UN-PAINTED) SURFACES OF A VEHICLE. IF SULFURIC ACID CONTACTS ANY OF THESE, FLUSH IMMEDIATELY WITH LARGE AMOUNTS OF WATER. IF SULFURIC ACID CONTACTS SKIN OR EYES, GET IMMEDIATE MEDICAL ATTENTION. DO NOT SMOKE IN THE VICINITY OF A BATTERY. KEEP OPEN FLAMES AND SPARKS AWAY FROM BATTERY FILLER CAPS BECAUSE EXPLOSIVE GAS IS ALWAYS PRESENT.

Inspect battery tray, hold down and terminal connections when other under hood service is performed. For proper diagnostic procedures refer to Group 8A, Battery/Starting/Charging System Diagnostics. For service and cleaning procedures refer to Group 8B, Battery/Starter Service.

Care should be taken when disposing a battery after removal from a vehicle. Lead-acid batteries are highly poisonous and, when indiscriminately disposed, could create a problem for the environment. Contact the applicable local city or county government agency to determine where automobile (lead-acid) batteries can be properly disposed in the local area.

RUBBER AND PLASTIC COMPONENT INSPECTION

CAUTION: Plastic hoses or wire harness covers will melt or deform when exposed to heat from exhaust system or engine manifolds.

Position plastic or rubber components away from moving parts in engine compartment or under vehicle, or damage will result.

Do not allow rubber engine mounts or other components to become oil contaminated, repair cause of oil contamination and clean area.

All rubber and plastic components should be inspected when engine compartment or under vehicle service is performed. When evidence of deterioration exists, replacement is required. To reduce deterioration of rubber components, Chrysler Corporation recommends Mopar Foamy Engine Degreaser or equivalent be used to clean engine compartment of oil and road grime.

EMISSION CONTROL SYSTEM

Inspect all emission control components and hoses when other under hood service is performed. Refer to emission system Vacuum Hose Label located on the inside of the hood in the engine compartment and Group 25, Emission Control Systems for proper service procedures.

ENGINE SUPPORTS

The general condition of the engine supports should be inspected when engine compartment or under vehicle service is performed.

INSPECTION

(1) Test the hardware that attaches the engine cylinder block to the engine support brackets (Figs. 11 and 12) for the specified tightening torque.

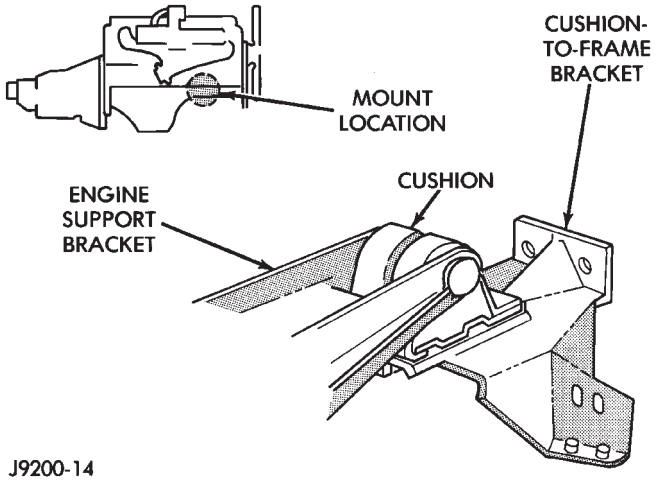

Fig. 11 Front Engine Support—Typical

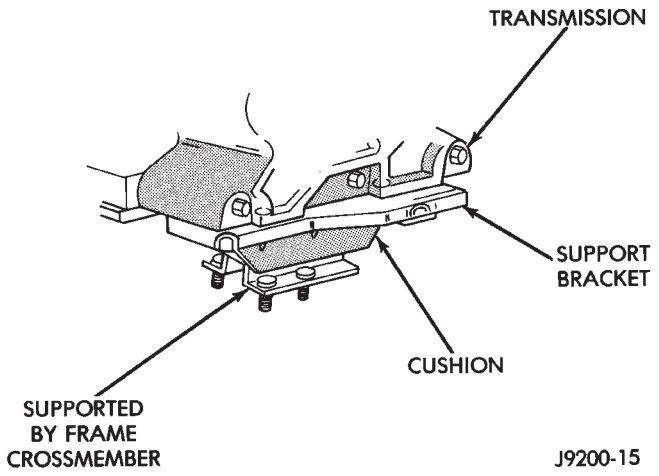

Fig. 12 Rear Engine Support—Typical

(2) Inspect the rubber in the engine support cushions for softening and swelling. Slight surface deterioration and wear at the ends will not affect the functioning of an engine support.

ACCESSORY DRIVE BELT

Inspect and adjust drive belts at the interval described in the Lubrication and Maintenance Schedules. Refer to General Information section of this group. For proper inspection and adjustment procedures, see Group 7, Cooling System.

EXHAUST SYSTEM

The exhaust system should be inspected when under vehicle service is performed or as specified in the Lubrication and Maintenance Schedules.

INSPECTION

When inspecting an exhaust system, inspect for cracked or loose joints, stripped screw/bolt threads, corrosion damage, and worn or broken hangers (Slight cracking in rubber isolator or hanger is acceptable). Replace all components that are corroded or damaged. Do not attempt repair. Also, inspect for the following obvious conditions and correct as necessary:

- Exhaust system leaks, damage, misalignment.
- Contact with body panels metal or the frame.
- Catalytic converter bulging or excessive heat damage.

CAUTION: A catalytic converter will become contaminated if leaded gasoline is burned in the engine. If this occurs, the complete converter must be replaced.

For proper service procedures see Group 11, Exhaust System and Intake Manifold.

AIR-CONDITIONER COMPRESSOR

LUBRICANT AND REFRIGERANT

The lubricant level in the air-conditioner compressor should be checked if there are indications that oil was lost. Loss of lubricating oil usually accompanies a loss of refrigerant.

For additional information involving the A/C system, refer to Group 24, Heater And Air Conditioning.

DRIVETRAIN

INDEX

	page		page
Automatic Transmission	23	Front and Rear Axles	24
Clutch and Brake Pedal Bushings	22	Manual Transmission	22
Clutch Master Cylinder	22	Rubber and Plastic Hoses/Tubing	26
Drive Shafts	26	Transfer Case (4WD Vehicles)	24

CLUTCH AND BRAKE PEDAL BUSHINGS

If the clutch and brake pedal mechanism squeaks, the pivot bushings should be lubricated. Use Mopar Multi-Purpose Lubricant, or an equivalent. Refer to Group 5, Brakes for location of bushings.

CLUTCH MASTER CYLINDER

LEVEL INSPECTION

WARNING: DO NOT ALLOW PETROLEUM OR WATER BASE LIQUIDS TO CONTAMINATE CLUTCH FLUID, SEAL DAMAGE AND CLUTCH FAILURE CAN RESULT.

The clutch reservoir level should be inspected when other underhood service is performed. (Fig. 1)

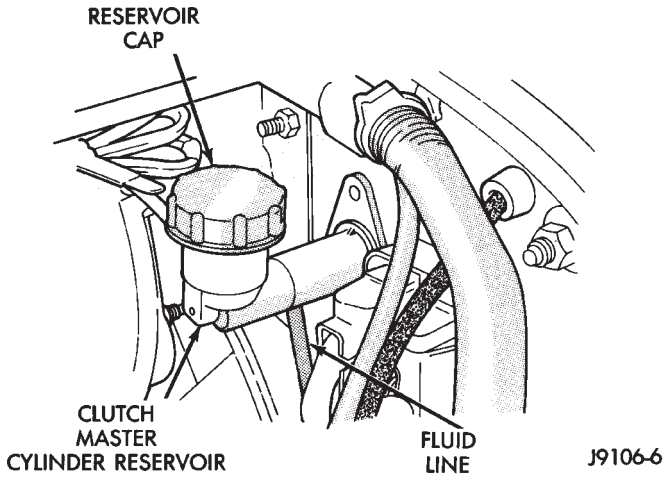

Fig. 1 Clutch Reservoir Location—Typical

The fluid level is determined by its height in relation to the level indicator ring (Fig. 2) located inside the reservoir. Add fluid until the height is level with the indicator ring.

FLUID SPECIFICATION

Use Mopar, Brake And Hydraulic Clutch Fluid or equivalent. Use only brake fluid conforming to DOT 3, Federal, Department of Transportation specification. To avoid fluid contamination, use fluid from a properly sealed container.

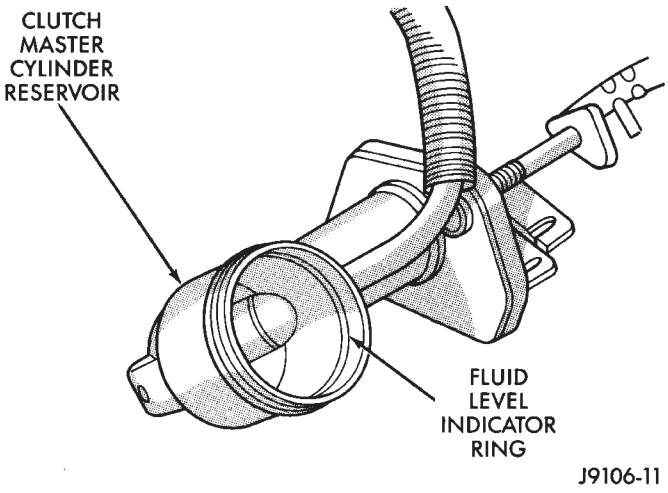

Fig. 2 Hydraulic Clutch Fluid Level—Typical

CAUTION: Never use reclaimed brake fluid or fluid from an unsealed container. In addition, do not use fluid from a container that has been opened and allowed to stand for an extended length of time. Moisture in the air can be absorbed by the fluid, which causes dilution with loss of effectiveness.

MANUAL TRANSMISSION

The manual transmission should be inspected for oil leaks and proper oil level when other under vehicle service is performed.

LUBRICANT SPECIFICATION

When it becomes necessary to add to or change the lube oil in a Jeep manual transmission, use SAE 75W-90, API Quality Grade GL-5 gear lubricant.

LUBRICANT LEVEL

The fill-hole plug for all manual transmissions is located on the right side of the case (Fig. 3). Determine the lubricant level according to the following procedure.

(1) Remove the fill-hole plug (Fig. 3) from the transmission. The lube oil should be level with the bottom edge of the fill hole. The level can be slightly below the bottom edge of the fill hole if the lube oil is cold.

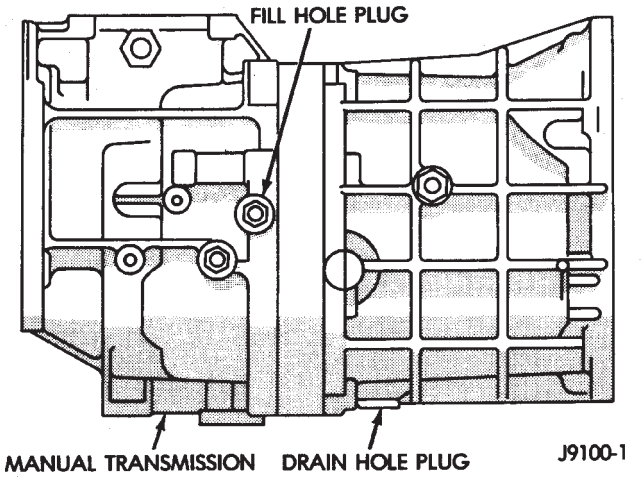

Fig. 3 Manual Transmission Fill- & Drain-Hole Plugs—Typical

If the transmission is warm, lube oil could drip out of the fill hole. This is acceptable but the lube oil should not gush out of the fill hole.

(2) If not acceptable, raise the lube oil level to the bottom edge of the transmission fill hole.

Add lube oil in small amounts to raise the level.

(3) Install the fill-hole plug in the transmission. Tighten the plug with 37 N·m (27 ft. lbs.) torque.

LUBE OIL CHANGE

When it becomes necessary to change manual transmission lube oil, use the following procedure.

(1) Raise and support the vehicle.

(2) Remove the fill-hole plug from the transmission.

(3) Place a container to collect the lube oil under the transmission drain-hole plug.

(4) Remove the drain-hole plug and drain the lube oil from the transmission into the container.

Care should be exercised when disposing used lube oil after it has been drained from a transmission.

(5) Install the drain-hole plug in the transmission. Tighten the plug with 37 N·m (27 ft. lbs.) torque.

(6) Fill the transmission until the lube oil begins to drip out of the fill hole.

(7) Install the fill-hole plug in the transmission. Tighten the plug with 37 N·m (27 ft. lbs.) torque.

(8) Remove the support and lower the vehicle.

AUTOMATIC TRANSMISSION

The automatic transmission fluid should be changed and bands adjusted at the intervals described in the Maintenance Schedules section of this Group. The automatic transmission should be inspected for fluid leaks and proper fluid level when other under hood service is performed. Refer to Group 21, Transmission for proper service procedures.

CAUTION: To minimize fluid contamination, verify that dipstick is seated in the fill tube after fluid level reading is taken.

TO INSPECT THE TRANSMISSION FLUID LEVEL

WARNING: USE EXTREME CAUTION WHEN THE ENGINE IS OPERATING. DO NOT PUT YOUR HANDS NEAR THE DRIVE BELT, PULLEYS OR FAN BLADE. DO NOT STAND IN A DIRECT LINE WITH THE FAN BLADE.

(1) Be sure transmission fluid is at normal operating temperature. Normal operating temperature is reached after approximately 15 miles (25km) of operation.

(2) Position the vehicle on a level surface. This is important for an accurate fluid level check.

(3) While sitting in driver seat, apply brakes and place gear selector in each position, then move the selector to:

- XJ vehicles-P (Park).
- YJ vehicles-N (Neutral).

(4) Apply parking brake.

(5) Raise hood and wipe off dipstick handle to prevent dirt from entering fill tube. Then remove transmission fluid level indicator (dipstick) and wipe clean with a wiping cloth.

(6) Install dipstick and verify it is seated in fill hole or tube.

(7) Remove dipstick, with handle above tip, take fluid level reading. If the vehicle has been driven for at least 15 minutes before inspecting fluid level, transmission can be considered hot and reading should be in the OK area. If vehicle has run for less than 15 minutes and more than 60 seconds transmission can be considered warm and reading should be above MIN mark. Add fluid only if level is below MIN mark on dipstick when transmission is warm (Fig. 4).

CAUTION: Do not overfill automatic transmission, leakage or damage can result.

AUTOMATIC TRANSMISSION FLUID SPECIFICATION

When it becomes necessary to add fluid or when the ATF is replaced, use:

- MOPAR Dexron IIE/Mercon ATF **only** for AW-4 automatic transmissions (XJ vehicles).
- MOPAR ATF PLUS type 7176 (YJ vehicles).

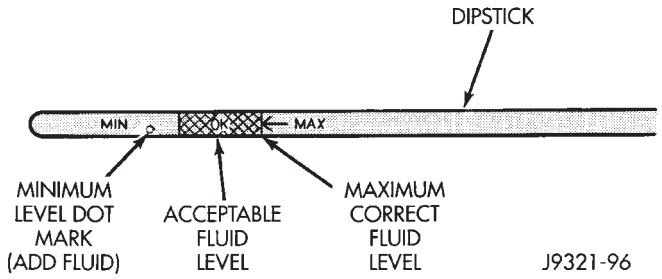

Fig. 4 Dipstick & ATF Level

SPECIAL ADDITIVES

The addition of any special-type fluid to a Jeep automatic transmission is not recommended. The only exception is the addition of black-light detection dye to aid in detecting the source of ATF leaks. The use of transmission sealing additives should also be avoided.

Black-light detection dye is factory-installed in automatic transmissions and, unless the ATF has been drained and re-placed, it is not necessary to add dye.

FLUID AND FILTER CHANGE

The automatic transmission fluid and filter should be changed at the intervals described in the Maintenance Schedules section of this Group. Refer to Group 21, Transmission for proper service procedures.

TRANSFER CASE (4WD VEHICLES)

The transfer case should be inspected for fluid leaks and proper fluid level when other under vehicle service is performed.

FLUID LEVEL

The transfer case fill hole plug is located at the rear of the housing (Fig. 5).

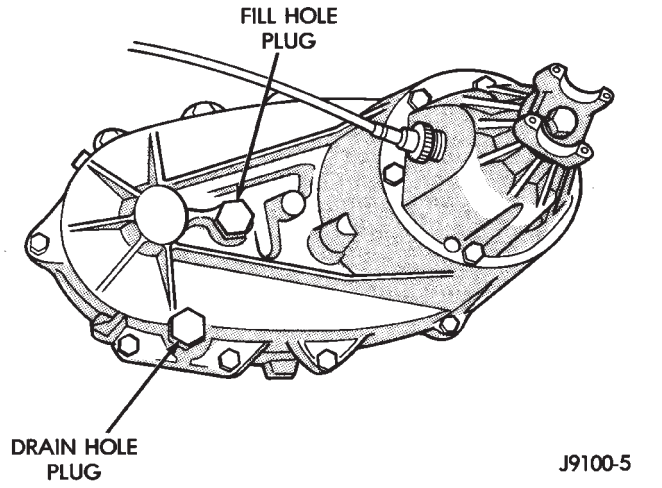

Fig. 5 Transfer Case—Typical

Determine the transfer case fluid (ATF) level according to the following procedure.

(1) Raise and support the vehicle.

(2) Remove the fill hole plug from the transfer case (Fig. 5). The fluid (ATF) level should be at the bottom edge of the fill hole. The level can be slightly below the bottom edge of the fill hole if the fluid is cold.

(3) If the level is not acceptable, raise the fluid level to the bottom edge of the fill hole.

(4) Install the fill hole plug (Fig. 5). Tighten the fill hole plug to 48 N·m (35 ft-lbs) torque.

(5) Remove the support and lower the vehicle.

FLUID DRAIN AND REFILL

The Transfer Case should be serviced as specified in the Lubrication and Maintenance Schedules.

(1) Raise and support the vehicle.

(2) Remove the fill hole plug (Fig. 5) from the transfer case.

(3) Place an appropriate container under the transfer case drain hole plug (Fig. 5).

(4) Remove the drain hole plug and drain the ATF from the transfer case into the container.

CAUTION: Do not over-tighten the drain and fill hole plugs. Over-tightening can strip the hole threads and/or crack the aluminum housing.

(5) Install the drain hole plug in the transfer case. Tighten the drain hole plug to 27 N·m (20 ft-lbs) torque.

(6) Fill the transfer case to the bottom edge of the fill hole.

(7) Install the fill hole plug in the transfer case Tighten the plug to 27 N·m (20 ft-lbs) torque.

(8) Remove the support and lower the vehicle.

FLUID SPECIFICATION

If it is necessary to add fluid to a transfer case (or when the fluid is changed), use MOPAR ATF PLUS type 7176 or an equivalent Mercon/Dexron III ATF.

FRONT AND REAR AXLES

The front and rear axles should be inspected for fluid leaks and proper fluid level when other under vehicle service is performed. Refer to the Lubrication and Maintenance Schedule service intervals.

LUBRICANT SPECIFICATIONS

For normal vehicle operation, use SAE 75W-90, API Quality Grade GL-5 gear lubricant in all Jeep front (4WD only) and rear axles. Vehicles equipped with a Trac-Lok rear axle also require a friction modifier additive included with the gear lubricant.

When involved in trailer towing applications use SAE 80W-140, API Quality Grade GL-5 gear lubricant in the rear axle. XJ Vehicles equipped with a class III trailer hitch require SAE 75W-140 synthetic gear lubricant in the rear axle.

LUBRICANT LEVEL

Determine the axle differential housing lubricant level according to the following procedure.

(1) Raise and support the vehicle.

(2) Remove the fill-hole plug (Fig. 6 and 7) from the axle differential housing cover. The gear lubricant should be 13 mm (1/2 inch) below the bottom edge of the fill hole.

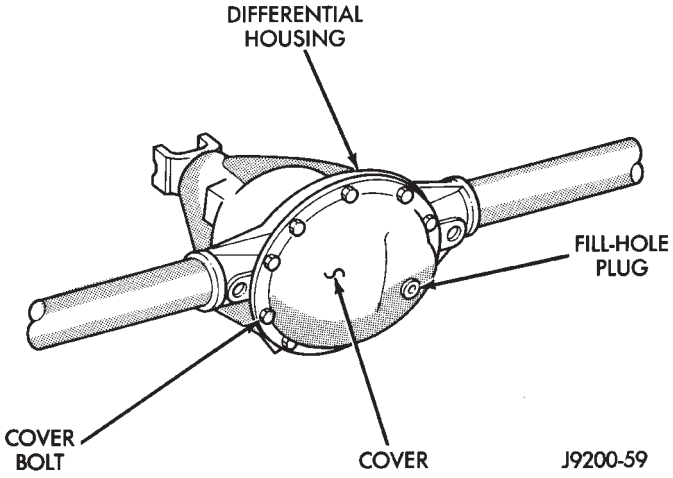

Fig. 6 Rear Axle—Typical

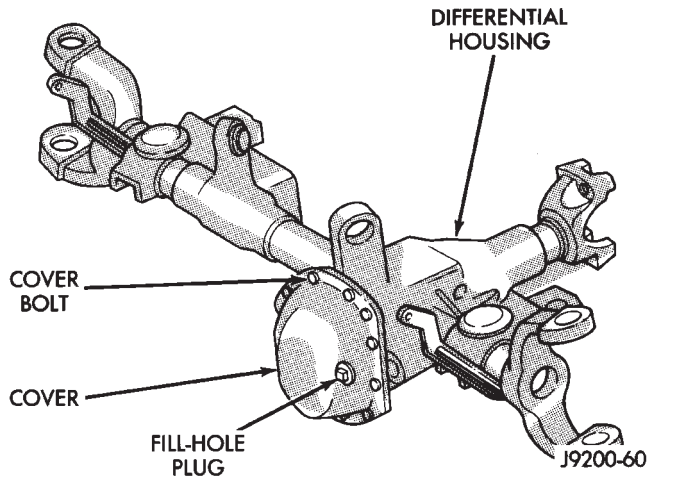

Fig. 7 Front Axle (4WD)—Typical

(3) If not acceptable, raise the lubricant level to 13 mm (1/2 inch) below the bottom edge of the fill hole. **Add lubricant in small amounts to raise the level.**

(4) Install the fill-hole plug in the differential housing cover. Tighten the plug with 34 N°m (25 ft. lbs.) torque.

(5) Remove the support and lower the vehicle.

LUBRICANT CHANGE

When it becomes necessary to change the axle lubricant in a Jeep front or rear axle, use the following procedure.

(1) Raise and support the vehicle.

(2) Place a container under the axle differential housing.

(3) Remove the axle differential housing cover bolts. Remove the housing cover.

(4) Allow the axle gear lubricant to completely drain into the container.

CAUTION: Do not flush a rear axle Trac-Lok differential. Trac-Lok differentials may be cleaned only by disassembling the unit and wiping the components with clean, lint-free cloth.

(5) Flush the inside of the differential housing with a flushing oil. **Do not use water, steam, kerosene or gasoline for flushing.**

(6) Remove any residual RTV sealant/gasket material from the differential housing and cover. Thoroughly clean the contact surfaces with mineral spirits and dry the surfaces completely.

(7) Apply a bead of MOPAR RTV Sealant, or an equivalent sealant, around the bolt circle on the housing and on the cover (Fig. 8).

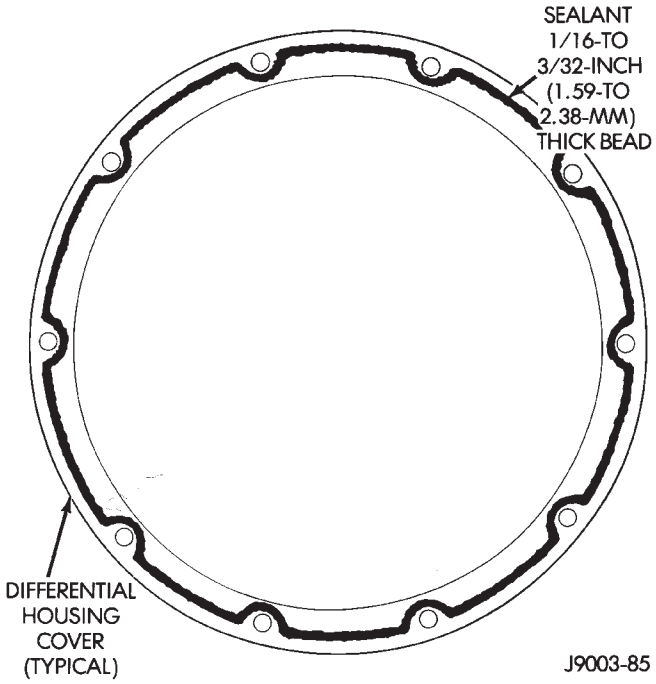

Fig. 8 RTV Sealant Application—Typical

If differential housing cover is not installed within 20 minutes after applying sealant, the sealant must be removed and another bead applied.

(8) Install the cover on the differential housing with the attaching bolts (Fig. 9). Tighten the cover bolts with 47 N·m (35 ft. lbs.) torque.

(9) Remove the fill-hole plug and add the replacement gear lubricant to the differential housing. Refer to Specifications above.

(10) Install the fill-hole plug. Tighten the plug with 34 N°m (25 ft. lbs.) torque.

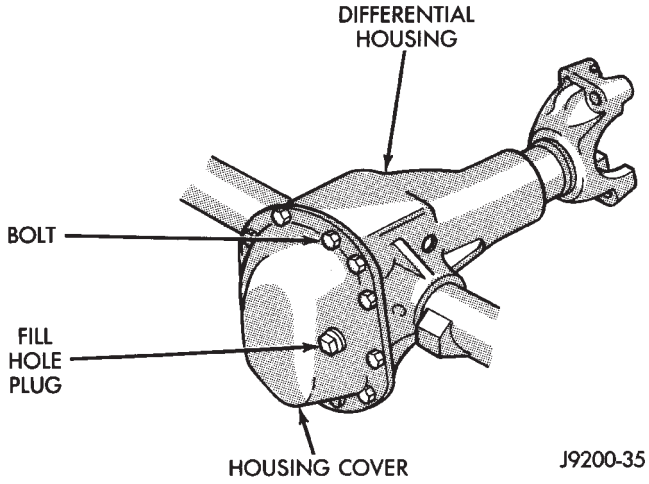

Fig. 9 Differential Housing Cover Installed

(11) Remove the support and lower the vehicle.

DRIVE SHAFTS

Lubricate at the intervals described in the Maintenance Schedule section of this Group. Refer to Group 16, Propeller Shafts for proper service procedures.

CAUTION: It is very important that drive shafts be lubricated at periodic intervals and that the specified type of lubricant be used. Failure to properly lubricate could result in premature wear of drive shaft components.

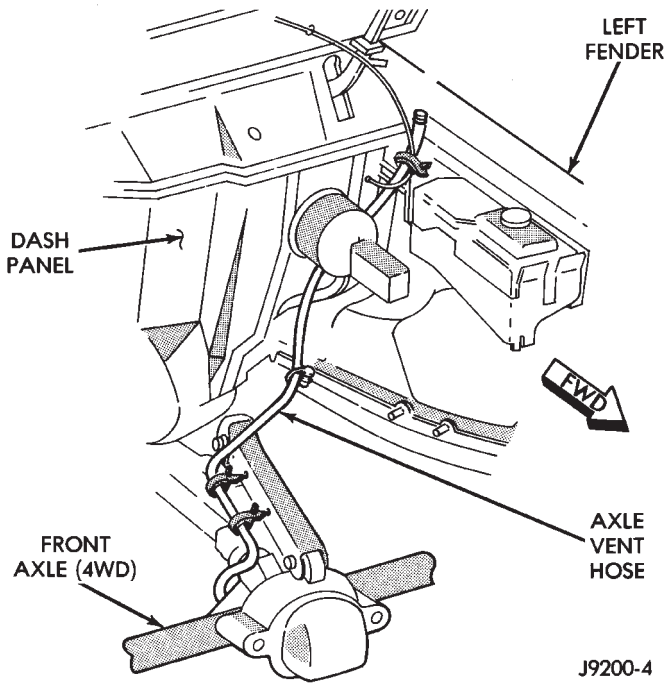

Fig. 10 Front Axle Vent Hose (4WD)—XJ Vehicles

LUBRICANT SPECIFICATION

Use Mopar, Multi-purpose Grease or any lubricate that is identified as NLGI GC-LB lubricant.

RUBBER AND PLASTIC HOSES/TUBING

The condition of underbody rubber hose and plastic tubing should be inspected whenever underbody service is performed.

Rubber hoses and plastic tubing should be replaced immediately if there is any evidence of failure.

HOSE/TUBING INSPECTION

(1) Inspect all hose and tubing fittings for looseness and corrosion. Inspect the rubber hoses for brittleness and cracks. Thoroughly inspect the hose ends (those that are slipped over nipple connectors) for splits (Fig. 10, 11, 12, 13, 14, 15 and 16).

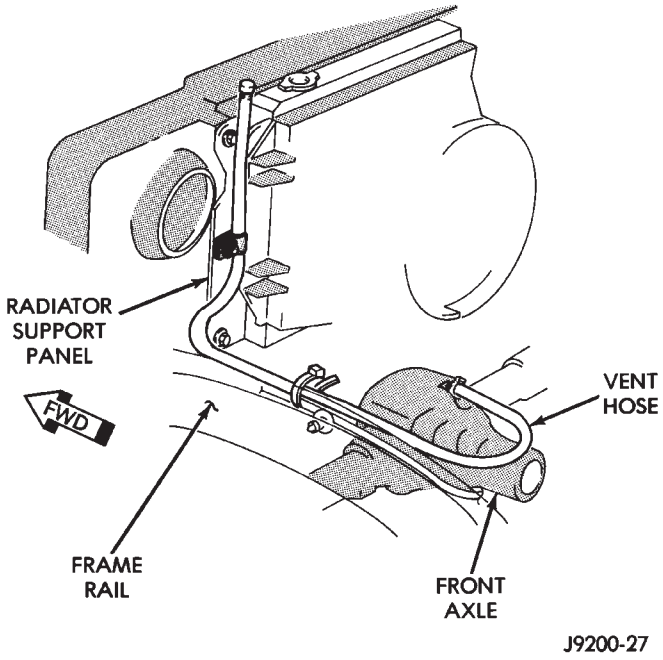

Fig. 11 Front Axle Vent Hose—YJ Vehicles

(2) Inspect the surface of hoses and tubing for heat and mechanical damage. Hose and tubing located close to an exhaust pipe should be given special attention.

(3) Inspect the rubber hose routing to ensure that the hoses do not contact any heat source, moving component, etc., that would potentially cause heat or mechanical damage.

(4) Inspect all the hose connections to ensure that they are secure and there is no fluid leakage. Actual dripping of hot fluid should be noted and the clamps tightened in an attempt to stop the leakage before replacing the hose.

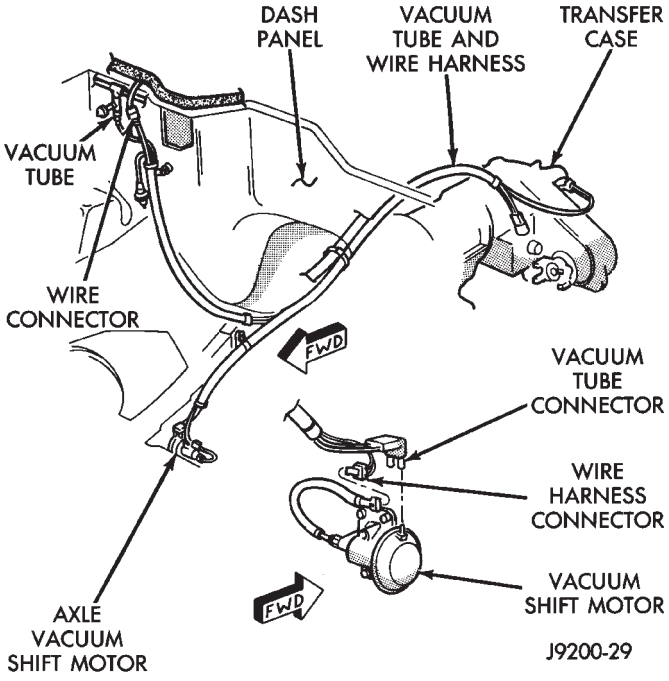

Fig. 12 Front Axle Vacuum Shift Tubing

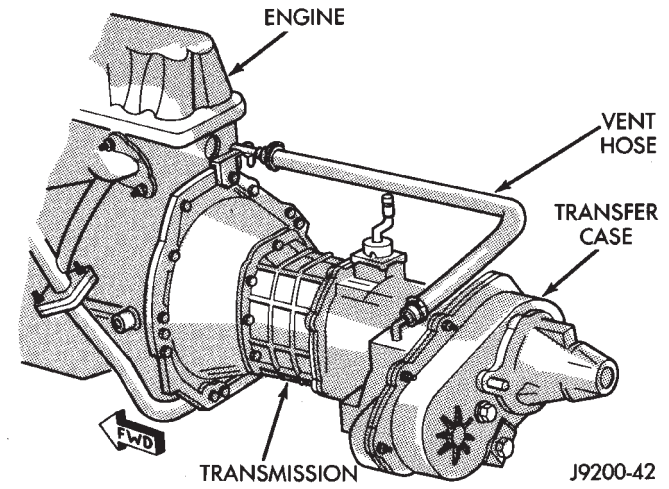

Fig. 13 Transfer Case Vent Hose (4WD)—Typical

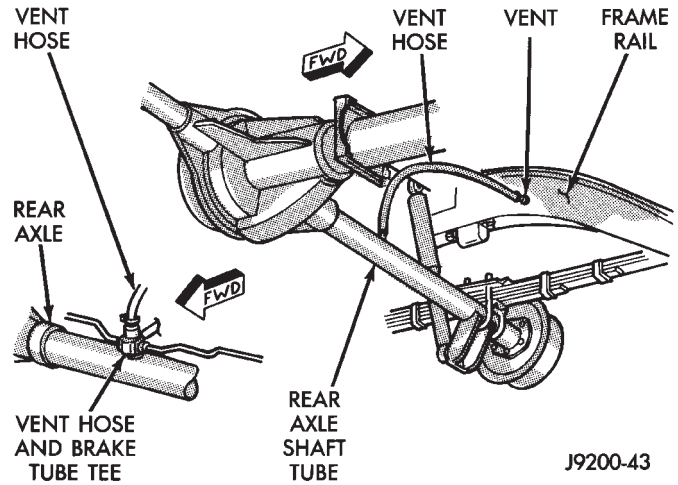

Fig. 14 Rear Axle Vent Hose—XJ Vehicles

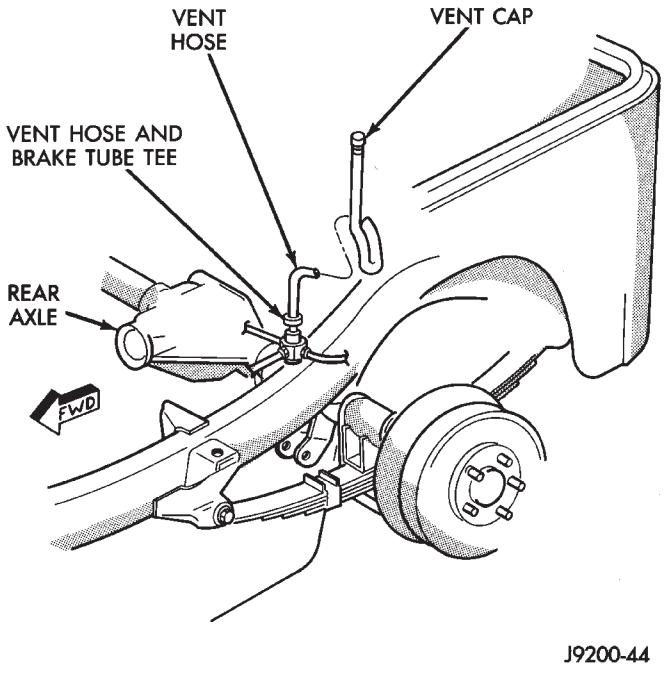

Fig. 15 Rear Axle Vent Hose—YJ Vehicles

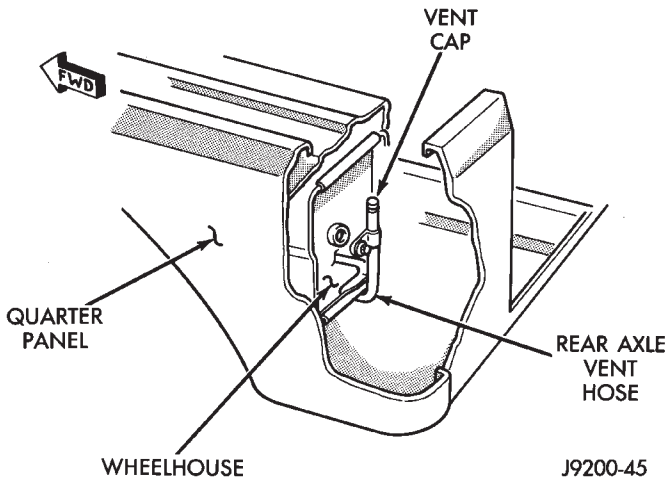

Fig. 16 Rear Axle Vent Hose At Wheelhouse—YJ Vehicles

CHASSIS AND BODY COMPONENTS

INDEX

	page
Body Components	32
Chassis Component and Wheel Bearing Lubricants	28
Front Wheel Bearings	28
Headlamps	33
Manual Steering Gear	30
Power Brake System	30
Power Steering System	29
Speedometer Cable	33
Steering Linkage	28
Tires	32

CHASSIS COMPONENT AND WHEEL BEARING LUBRICANTS

The chassis component and wheel bearing lubricants that are recommended for Jeep vehicles are identified by the NLGI Certification Symbol (Fig. 1). The symbol contains a coded designation that identifies the usage and quality of the lubricant.

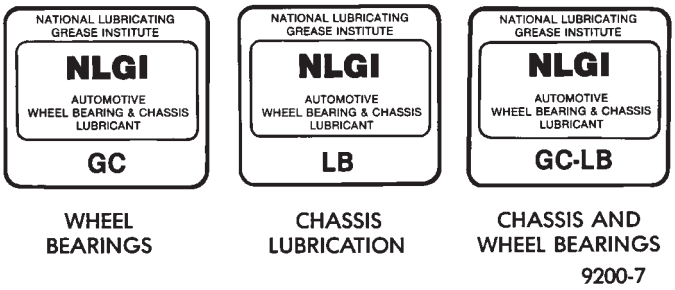

Fig. 1 NLGI Lubricant Container Certification/ Identification Symbol

The letter **G** designates wheel bearing lubricant. Letter **L** designates chassis lubricant. When the letters are combined the lubricant can be used for dual applications. The suffix letters **C** and **B** designate the level of the lubricant for the application. The letter **C** represents level available for wheel bearing lubricant (G) and the letter **B** represents level available for chassis lubricant (L).

STEERING LINKAGE

The steering linkage (Fig. 2) should be lubricated and inspected at the intervals described in the Maintenance Schedules section of this Group. Refer to Group 2, Front Suspension and Axles for proper service procedures.

LUBRICANT SPECIFICATION

Use Mopar, Multi-purpose Grease or NLGI GC-LB lubricant equivalent to lubricate the steering linkage.

INSPECTION

(1) Inspect the steering linkage. Examine the tie rods and the drag link for bending, and the ball studs for looseness and excessive wear.

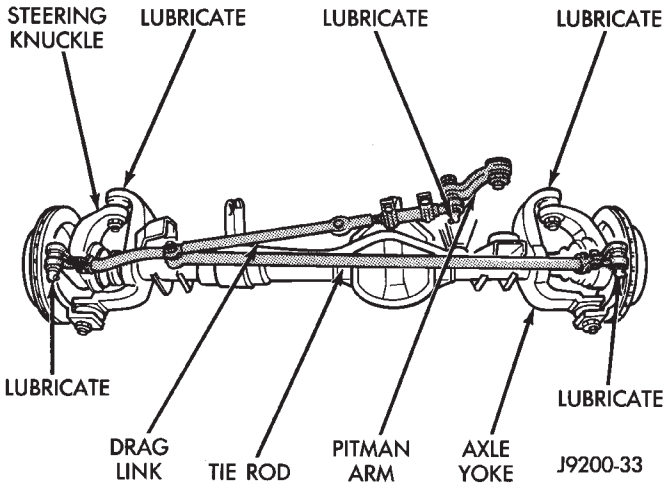

Fig. 2 Steering Components (XJ)—Typical

(2) Replace, as necessary, all torn/ruptured ball-stud seals and damaged/defective steering linkage components.

CAUTION: Use care to prevent lubricant from contacting the brake rotors.

FRONT WHEEL BEARINGS

Some 2WD XJ vehicles are equipped with serviceable front wheel bearings. XJ 4WD vehicles have semi-floating axle shafts and axle shaft bearings that are lubricated via differential lube oil.

RECOMMENDED MAINTENANCE—2WD XJ VEHICLES

If equipped, the serviceable front wheel bearings should be lubricated (re-packed) at the same time as front brake pad/caliper service is conducted.

LUBRICANT SPECIFICATION

Wheel bearings should be lubricated with a lubricant that is identified as NLGI GC-LB lubricant.

INSPECTION/LUBRICATION

(1) Remove the wheel/tire and the disc brake caliper. **Do not disconnect the caliper brake fluid**

hose unless the caliper must also be removed for maintenance.Support the caliper with a hanger to prevent brake fluid hose damage.

(2) Remove the dust cap, the cotter pin, the nut retainer, the adjustment nut, and the thrust washer from the spindle (Fig. 3). Discard the cotter pin.

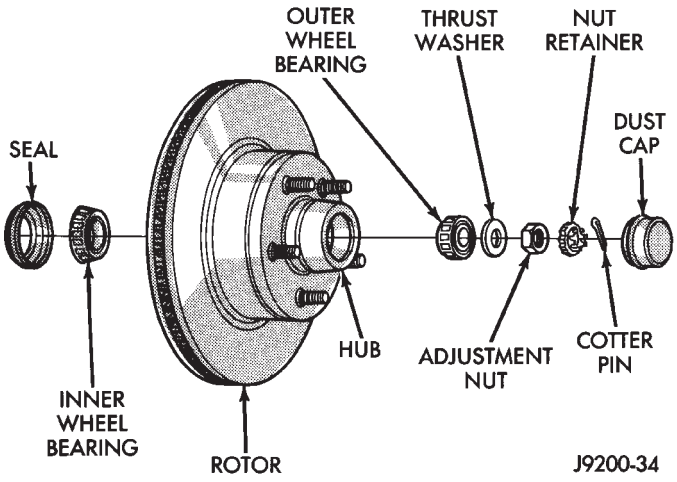

Fig. 3 2WD Front Wheel Bearings—XJ Vehicles

(3) Remove the wheel outer bearing from the hub.

(4) Remove the wheel hub/disc brake rotor from the spindle.

(5) Remove the seal and the inner wheel bearing from the hub cavity.

(6) After removal, inspect both front wheel bearing races for indications of pitting, brinelling and excessive heat.

(7) Wipe the spindle clean and apply a small amount of chassis/wheel bearing lubricant (NLGI GC-LB lubricant) to prevent rust. Wipe the wheel hub cavity clean.

CAUTION: Do not over-fill the wheel hub cavity with lubricant. Excessive lubricant can cause overheating and bearing damage. Also, excessive lubricant can be forced out of the wheel hub cavity and contaminate the brake rotor/pads.

(8) Partially fill the wheel hub cavity with chassis/wheel bearing lubricant (NLGI GC-LB lubricant).

(9) Pack the wheel bearings with chassis/wheel bearing lubricant (NLGI GC-LB lubricant). Ensure that sufficient lubricant is forced between the bearing rollers.

(10) Install the wheel inner bearing in the wheel hub and install a replacement seal.

(11) Clean the disc brake rotor contact surfaces, if necessary.

(12) Install the wheel hub/disc brake rotor on the spindle.

(13) Install the wheel outer bearing, the thrust washer, and the spindle nut.

(14) Tighten the spindle nut with 28 N·m (21 ft. lbs.) torque while rotating the disc brake rotor to seat the bearings.

(15) Loosen the spindle nut 1/2 turn. While rotating the disc brake rotor, tighten the spindle nut with 2 N·m (19 in. lbs.) torque.

(16) Install the nut retainer and a replacement cotter pin.

(17) Clean the dust cap and apply wheel bearing lubricant to the inside surface. **Do not fill the dust cap with lubricant.**

(18) Install the dust cap.

(19) Install the disc brake caliper.

POWER STEERING SYSTEM

The power steering fluid level should be inspected when other under hood service is performed. For proper service procedures, refer to Group 19, Steering.

Inspect the power steering system (Fig. 4, and 5) for the sources of fluid leaks, steering gear housing cracks and ensure that the steering gear is securely attached to the vehicle frame rail. Inspect the steering damper for leaks and loose connections.

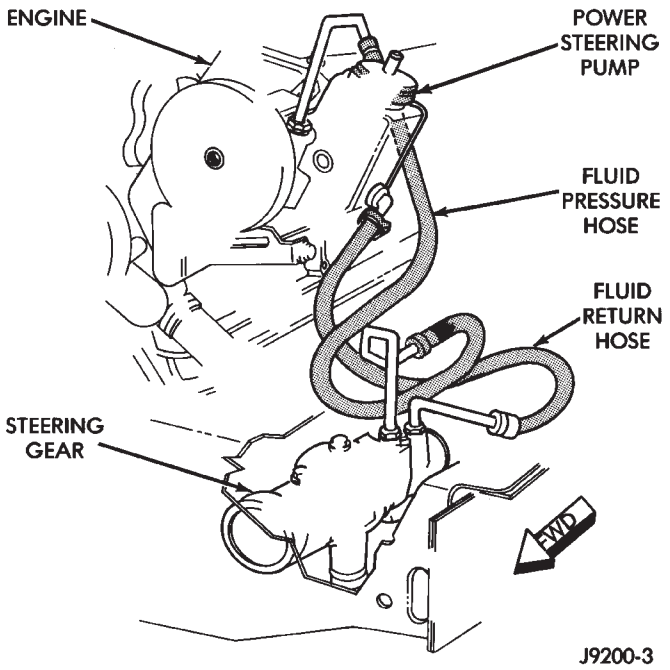

Fig. 4 Power Steering System—XJ Vehicles

FLUID SPECIFICATION

Use MOPAR Power Steering Fluid, or an equivalent product.

POWER STEERING FLUID INSPECTION

WARNING: ENGINE MUST NOT BE RUNNING WHEN INSPECTING POWER STEERING FLUID LEVEL, PERSONAL INJURY CAN RESULT.

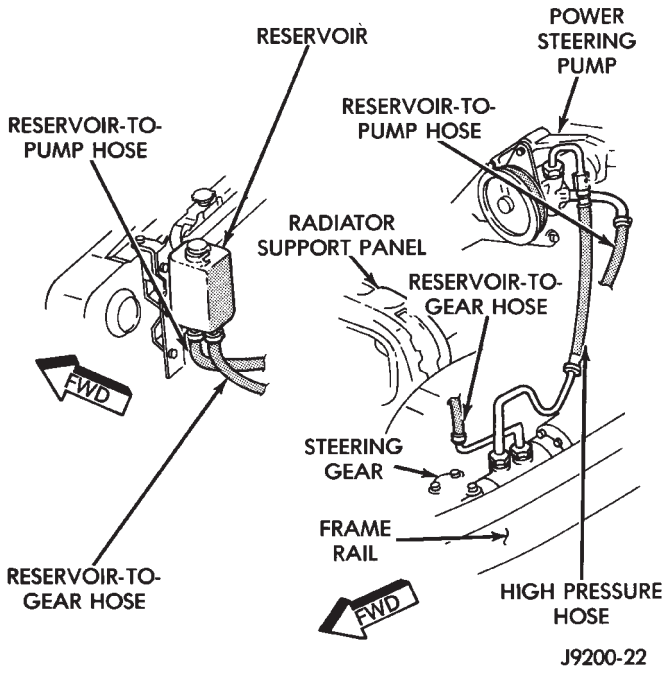

Fig. 5 Power Steering System—YJ Vehicles

FLUID LEVEL

The fluid level indicator (dipstick) is attached to the reservoir cap (Fig. 6). The fluid level in the reservoir can be determined with the fluid either hot or cold.

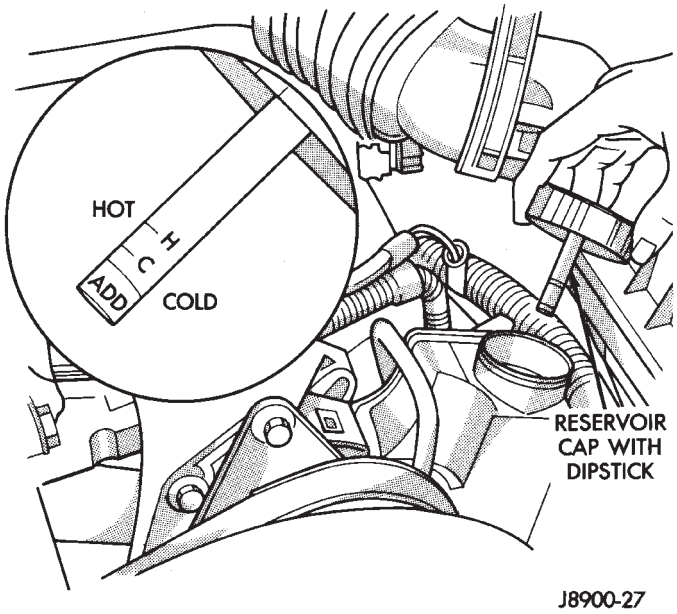

Fig. 6 Power Steering Fluid Reservoir Dipstick—Typical

(1) Remove the cap from the reservoir.

(2) Depending on fluid temperature, if the level is below the FULL HOT mark or the FULL COLD mark on the dipstick, add power steering fluid.

(3) Install the cap on the reservoir.

CAUTION: Do not over fill power steering reservoir when adding fluid, seal damage and leakage can result.

MANUAL STEERING GEAR

The manual steering gear should be inspected for damage at the same time as the engine oil is changed and the oil filter is replaced. Refer to Group 19, Steering for additional information and service procedures.

POWER BRAKE SYSTEM

RECOMMENDED MAINTENANCE

The brake fluid level (Fig. 8) should be inspected when other underhood service is done. With disc-brakes, the fluid level can be expected to fall as the brake pads wear. However, a low fluid level can also be caused by a leak, and repair will then be necessary. Refer to Group 5, Brakes for proper service procedures.

In addition, the brake system should be operationally tested periodically to ensure that it is functioning normally.

FLUID SPECIFICATION

Jeep power brake systems require MOPAR Heavy-Duty Brake Fluid, or an equivalent product identified as conforming to FMVSS No. 116, DOT-3 and SAE J-1703 specifications.

Use brake fluid from properly sealed container when adding fluid to the reservoir. Never use reclaimed fluid or fluid that does not conform to the DOT/SAE Standards.

CAUTION: Use of a brake fluid that has a lower initial boiling point then specified by FMVSS No. 116, DOT 3 and SAE J-1703 could result in sudden brake failure during hard, prolonged braking.

Do not allow petroleum base fluids to contaminate the brake fluid. Seal damage will result.

BRAKE FLUID LEVEL

STANDARD POWER BRAKE SYSTEM

(1) Clean the cover and the sides of the brake fluid reservoir.

(2) Detach the bail retainer from the reservoir cover and remove the cover from the reservoir.

(3) The brake fluid level should be 6 mm (1/4 in) below the rim of each reservoir well for XJ and YJ Vehicles (Fig. 7 and 8). If not, add brake fluid as necessary.

(4) Inspect the reservoir cover bail retainer for tension and the cover for proper fit. The cover should fit tight and have a good seal.

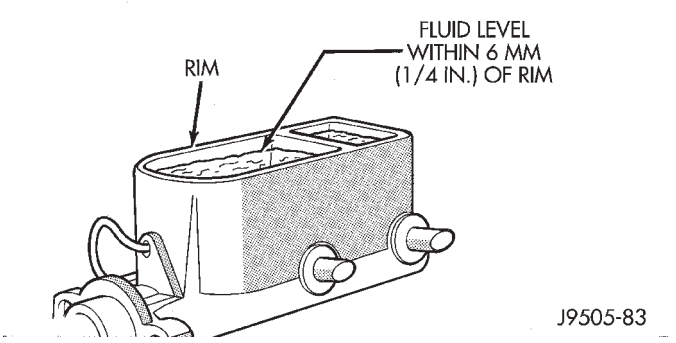

Fig. 7 Reservoir Fluid Level—YJ (2.5L)

(5) Inspect the reservoir rubber diaphragm seal for cracks, cuts and distortion.

(6) Inspect the brake fluid tubing fittings and the master cylinder housing for indications of fluid leakage. Repair as necessary.

(7) Install the brake fluid reservoir cover.

ANTI-LOCK BRAKE SYSTEM—XJ VEHICLES

The anti-lock brake system fluid reservoir for XJ Vehicles is located in the engine compartment at the left side of the dash panel.

(1) Turn the ignition switch ON and allow the pump motor to operate until it automatically de-energizes.

(2) Clean the cover before removing it.

CAUTION: Over-filling could cause fluid overflow and possible reservoir damage when the pump motor energizes.

(3) The brake fluid level should be no lower than the ADD indicator on the side of the reservoir (Fig. 8). If not, add brake fluid as necessary. Raise the fluid level to the FULL indicator only. Do not over-fill the reservoir.

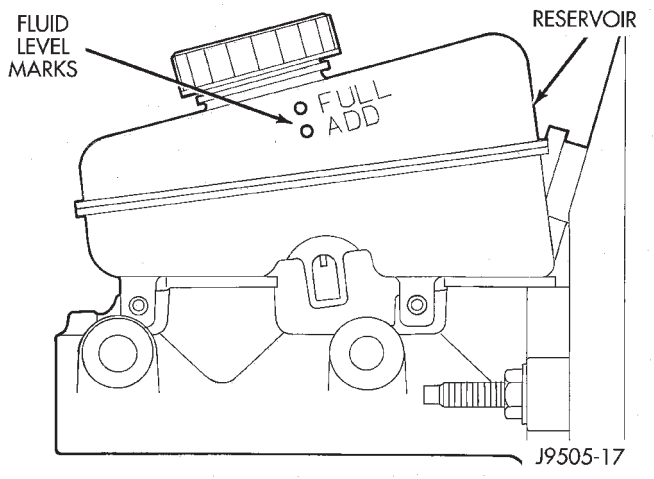

Fig. 8 Reservoir Fluid Level—YJ-XJ and Anti-Lock Brake System

(4) Turn the ignition switch OFF.

BRAKE SYSTEM INSPECTION

A brake system inspection should be included with all brake service procedures, and also each time the vehicle is lubricated.

(1) Inspect the brake pads and linings for excessive wear, cracks, charred surfaces and broken rivets.

(2) Inspect brake pads and linings for contamination from brake fluid, and/or other fluids.

(3) Replace the brake pads linings if they are worn to within 0.78 mm (1/32 in) of the rivet head.

(4) Operate the rear brake self-adjuster lever and pivot. Test the operation of the self-adjuster screw for ease of movement.

(5) Inspect the self-adjuster components for wear or damage.

(6) Inspect the disc brake caliper dust boot for damage and indications of brake fluid leakage. Inspect the bushings and pins for corrosion, tears and a binding condition.

(7) Pull the rear wheel cylinder dust boot back to expose the wheel cylinder housing. Inspect for fluid leaks. Inspect the pistons and cylinder bores.

(8) Inspect the brake differential warning valve and housing for indications of leakage.

BRAKE FLUID HOSES/TUBING

The rubber brake fluid hoses should be inspected for:

- Correct length
- Severe surface cracking
- Swelling
- Pulling
- Scuffing
- Excessively worn areas

If the hose has cracks or abrasions in the rubber cover, the hose should be replaced.

(1) Inspect all the hoses for kinks, a distorted condition and fluid leakage.

(2) Inspect the hose and tubing routing under the vehicle. Verify that no hose/tubing is rubbing against any exhaust or other underbody components.

PARKING BRAKE

(1) Engage the parking brake pedal and then release it.

(2) Test it for smooth operation and vehicle-holding capability.

(3) Inspect the parking brake cables.

(4) With the parking brake released, the rear wheels should

rotate without restriction. Adjust the parking brake cable tension, if necessary (Fig. 9 and 10).

(5) Repair any parking brake malfunctions.

BRAKE OPERATIONAL TEST

(1) Drive the vehicle and test for proper brake action.

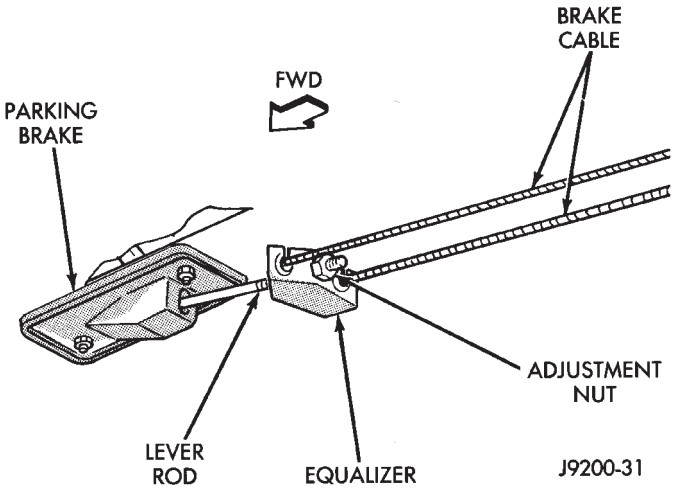

Fig. 9 Park Brake Equalizer (XJ)—Typical

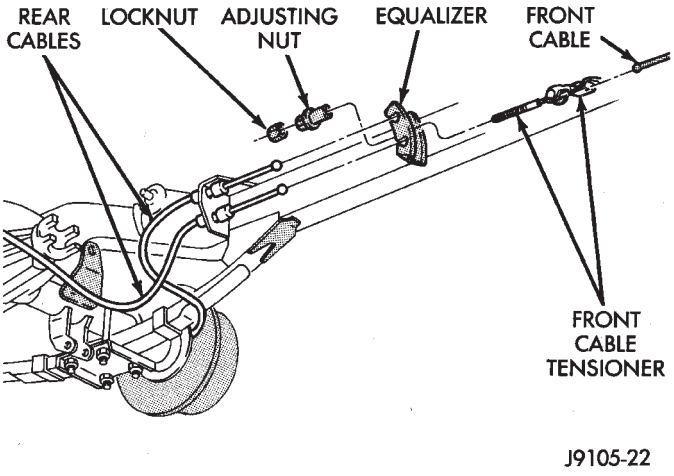

Fig. 10 Park Brake Equalizer (YJ)—Typical

(2) Note any indication of drum/rotor overheating, wheel dragging or the vehicle pulling to one side when the brakes are applied.

(3) Evaluate any performance complaints received from the owner/operator.

(4) Repair the brake system as necessary. Refer to Group, 5 Brakes for additional information and service procedures.

TIRES

RECOMMENDED MAINTENANCE

The general condition of the tires and the inflation pressures should be inspected at the same time the engine oil is changed and the oil filter is replaced.

In addition, the tires/wheels should be rotated at the intervals described in the Maintenance Schedules section of this group.

INSPECTION

Inspect the tires for excessive wear, damage, etc. Test the tires for the recommended inflation pressure. Refer to the tire inflation pressure decal located on the inside of the glove box door, and also to Group 22, Tires And Wheels.

ROTATION

Refer to Group 22, Tires And Wheels for the recommended method of tire/wheel rotation for a Jeep vehicle.

BODY COMPONENTS

LUBRICATION REQUIREMENTS

All Jeep operating mechanisms and linkages should be lubricated when necessary. The door weatherstrip seals should be lubricated to prolong their life as well as to improve door sealing.

LUBRICANT SPECIFICATIONS

All applicable exterior and interior vehicle operating mechanisms should be:

- Inspected
- Cleaned
- Pivot/sliding contact areas on the mechanisms should then be lubricated.

Multi-purpose NLGI GC-LB MOPAR Multi-Mileage Lubricant or an equivalent, should be used to lubricate the mechanisms. The door weatherstrip seals should be lubricated with silicone lubricant spray. Refer to the Body Lubricant Specifications chart below for additional lubricant applications.

LUBRICATION

All pivoting and sliding contact areas, should be lubricated periodically to ensure quiet, easy operation and to protect against wear and corrosion. Areas include:

- Seat tracks.
- Door hinges/latches/strikers.
- Liftgate/tailgate/hood hinges (Fig. 11).

(1) As required, lubricate the body components with the specified lubricants.

(2) Apply silicone lubricant to a cloth and wipe it on door seals to avoid over-spray that can soil passenger clothing.

(3) Before applying lubricant, the component should be wiped clean. After lubrication, any excess lubricant should be removed.

(4) The door lock cylinders should be lubricated 2 times each year (preferably autumn and spring):

- Spray a small amount of lock cylinder lubricant directly into the lock cylinder.
- Apply a small amount to the key and insert it into the lock cylinder.
- Rotate it to the locked position and then back to the unlocked position several times.
- Remove the key. Wipe the lubricant from it with a clean cloth to avoid soiling of clothing.

BODY LUBRICANT SPECIFICATIONS

COMPONENT	SERVICE INTERVAL	LUBRICANT
Door Latches	As Required	Multi-Purpose Grease NLGI GC-LB (Water Resistant) (1)
Hood Latch Release Mechanism & Safety Latch	As Required (When Performing Other Underhood Services)	Multi-Purpose Grease NLGI GC-LB 2 EP (2)
Hood Hinges	As Required	Engine Oil
Seat Regulator & Track Release Mechanism	As Required	Multi-Purpose Grease NLGI GC-LB 2 EP (2)
Tailgate Hinge	As Required	Multi-Purpose Grease NLGI GC-LB 2 EP (2)
Tailgate Support Arms	As Required	Engine Oil
Tailgate Latches	As Required	White Spray Lubricant (3)
Tailgate Release Handle (Pivot & Slide Contact Surfaces)	As Required	Multi-Purpose Grease NLGI GC-LB 2 EP (2)
Window System Components (Regulators, Tracks, Rods & Channel Areas — Except Glass Run Weatherstrips and Felt Lubricator, if Equipped)	As Required	White Spray Lubricant (3)
Lock Cylinders	Twice/Year	Lock Cylinder Lubricant (4)
Parking Brake Mechanism	As Required	Multi-Purpose Grease NLGI GC-LB (1)
1. Mopar Wheel Bearing Grease (High Temperature) 2. Mopar Multi-Mileage Lubricant 3. Mopar Spray White Lube 4. Mopar Lock Cylinder Lubricant		

J9400-5

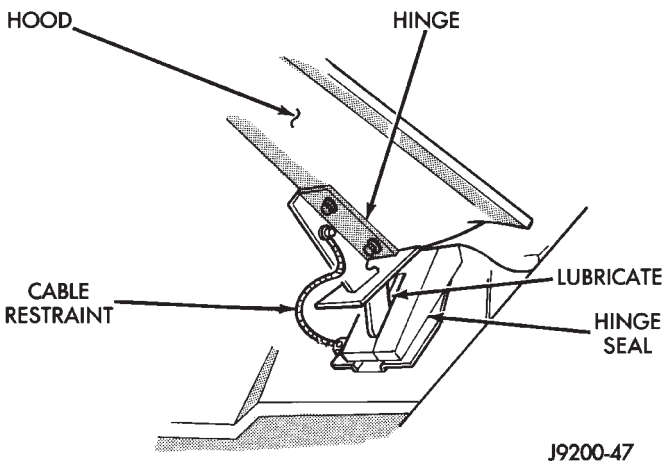

Fig. 11 Hood Hinge Lubrication—XJ Vehicles

(5) Extra close attention should also be given to the hood latch components to ensure proper functioning.

HEADLAMPS

MAINTENANCE SCHEDULE

Every six months check the headlamp beams to ensure that the headlamp beams are correctly positioned.

AIM ADJUSTMENT

Refer to Group 8L, Lamps for headlamp aim adjustment procedures.

SPEEDOMETER CABLE

SERVICE INFORMATION

Speedometer cable lubrication is not necessary. For service information involving noisy cables, refer to Group 8E, Instrument Panel and Gauges.

FRONT SUSPENSION AND AXLE

CONTENTS

	page		page
AXLE NOISE/VIBRATION DIAGNOSIS	18	MODEL 30 AXLE AND TUBE AXLE (2WD)	22
AXLE SPECIFICATIONS	49	TORQUE SPECIFICATIONS	49
FRONT WHEEL ALIGNMENT	5	XJ FRONT SUSPENSION	11
GENERAL INFORMATION	1	YJ FRONT SUSPENSION	15

GENERAL INFORMATION

FRONT SUSPENSION

XJ VEHICLES

The XJ front suspension is a link/coil design. This suspension is use on Left Hand Drive (LHD) and Right Hand Drive (RHD) vehicles. It is comprised of (Fig. 1);

- Drive axle (4WD), tube axle (2WD)
- Track bar
- Stabilizer bar
- Upper and lower suspension arms
- Coil springs
- Dual-action shock absorbers
- Jounce bumpers

The link/coil suspension allows each wheel to adapt to different road surfaces without greatly affecting

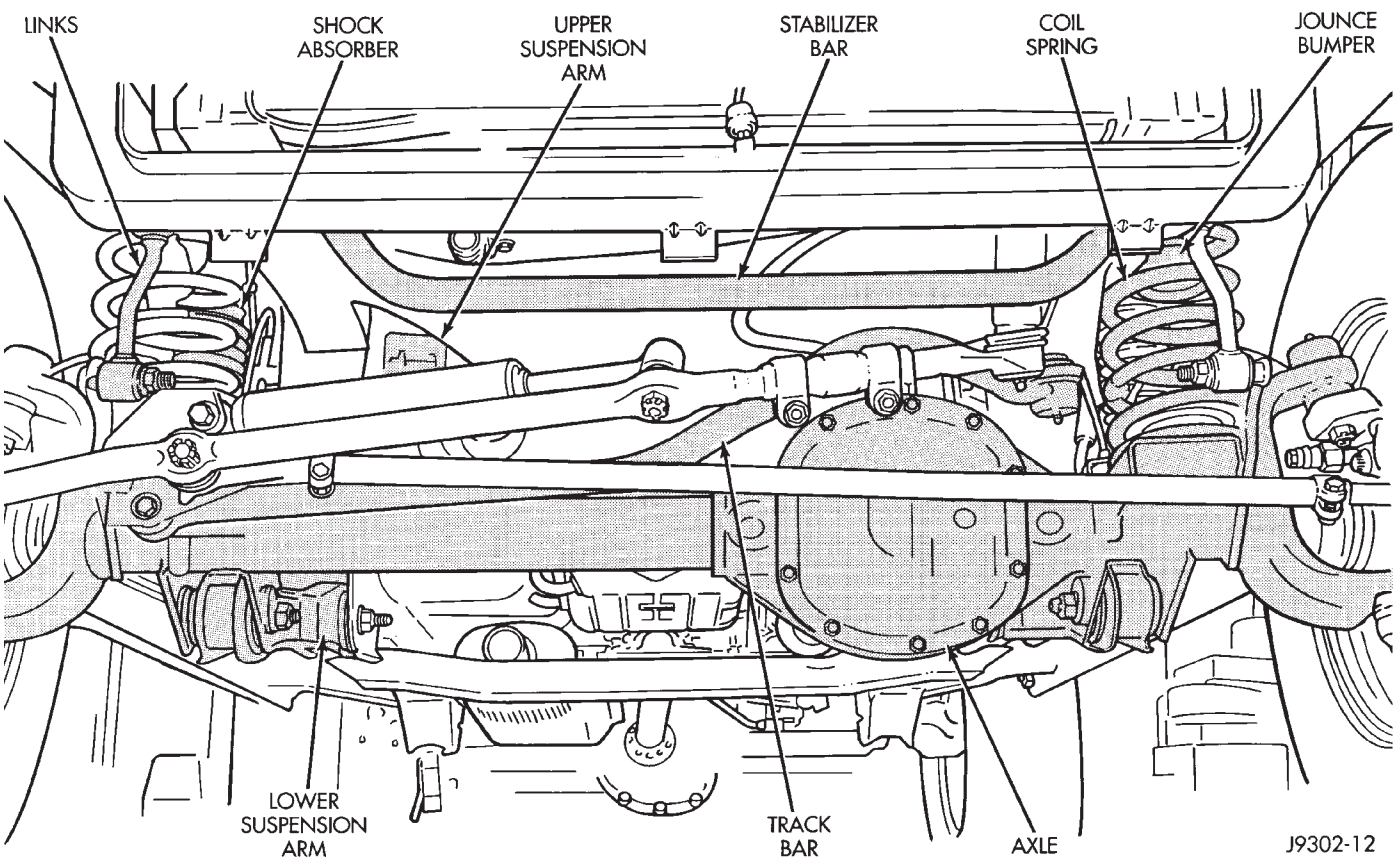

Fig. 1 XJ Front Suspension (LHD)

the opposite wheel. Wheels are attached to a hub/bearings which bolts to the knuckles. The hub/bearing is not serviceable and is replaced as a unit. Steering knuckles pivot on replaceable ball studs attached to the axle tube yokes.

The upper and lower suspension arms are different lengths, with bushings at both ends. They bolt the axle assembly to the body. The lower arms uses shims at the body mount to allow for adjustment of caster and drive shaft pinion angle. The suspension arm travel is limited through the use of jounce bumpers in compression and shocks absorbers in rebound.

Suspension components which use rubber bushings should be tightened at vehicle ride height. This will prevent premature failure of the bushing and maintain ride comfort. Bushings must never be lubricated.

The coil springs control ride quality and maintain proper ride height. The coil springs mount up in the fender shield which is part of the unitized body bracket. A rubber isolator is located between the top of the spring and the frame. The bottom of the spring seats on a axle pad and is retained with a clip.

The shock absorbers dampen jounce and rebound of the vehicle over various road conditions. The top of the shock absorbers are bolted to the body. The bottom of the shocks are bolted to the axle spring bracket.

The stabilizer bar is used to minimize vehicle body roll during turns. The spring steel bar helps to control the vehicle body in relationship to the suspension. The bar extends across the front underside of the chassis and connects to the body rails. Links are connected from the bar to the axle brackets. Stabilizer bar mounts are isolated by rubber bushings.

The track bar is used to minimize front axle side-to-side movement. The bar is attached to a frame rail bracket with a ball stud and isolated with a bushing at the axle bracket.

TUBE AXLE (2WD VEHICLES)

The front axle used on two-wheel drive vehicles is a one-piece, tubular axle (Fig. 2). The tubular axle mounts in the same bracketry as the four-wheel drive axle.

The steering knuckles and hub bearing assemblies are the same as used on the Model 30 drive axle.

YJ VEHICLES

The Wrangler (YJ) front suspension is leaf spring design comprised of (Fig. 3);

- Drive axle
- Track bar
- Stabilizer bar
- Leaf springs
- Dual-action shock absorbers
- Jounce bumpers (used to limit the travel of the suspension)

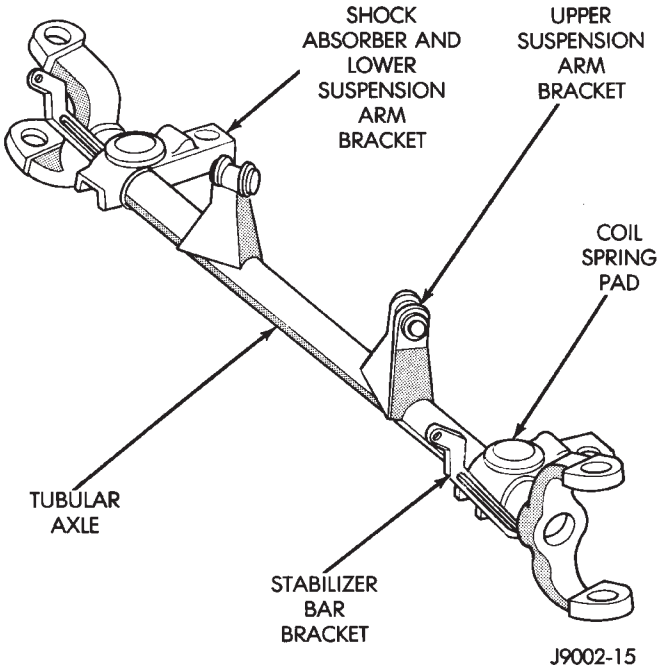

Fig. 2 Front Axle—2WD Vehicles

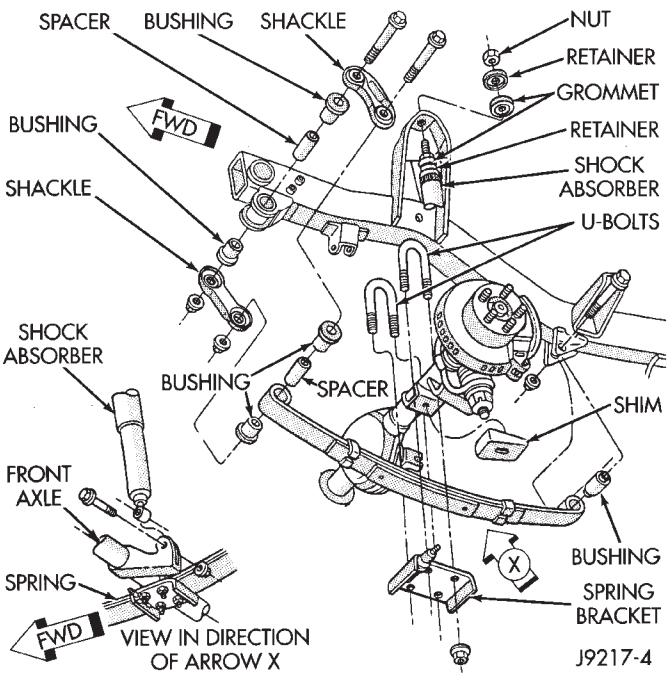

Fig. 3 YJ Front Suspension

The front suspension has semi-elliptic multi-leaf springs mounted to the axle assembly. The rearward end of the springs are mounted to the frame rail hangers. The forward end of the springs are attached to the frame with shackles. The springs and shackles use rubber bushings to isolate road noise. The shackles allow the springs to change their length as the vehicle moves over various road conditions. The

spring and axle travel (jounce or rebound) is limited through use of rubber bumpers mounted on the frame.

Suspension components which use rubber bushings should be tightened at vehicle ride height. This will prevent premature failure of the bushing and maintain ride comfort. The bushings should never be lubricated.

The shocks absorbers dampen jounce and rebound of the vehicle over various road conditions. The top of the shock absorbers bolt to the frame. The bottom of the shocks bolt to the axle brackets.

The stabilizer bar is used to minimize vehicle front sway during turns. The spring steel bar helps control vehicle body in relationship to the suspension movement. The bar extends across the front underside of the chassis and connects to the frame rails. Links connect the bar to the axle brackets. Stabilizer bar mounts are isolated by rubber bushings.

The track bar is used to minimize front axle side-to-side movement. The track bar is attached to a frame rail bracket and axle bracket. The bar uses bushings at both ends.

FRONT DRIVE AXLE

It is not necessary to remove the complete axle from the vehicle for routine differential service. If the differential housing or axle shaft tubes are damaged, the complete axle assembly can be removed and serviced.

For complete drive axle assembly removal and installation refer to Drive Axle Assembly Replacement in this Group.

The removable cover provides for servicing without removing axle from vehicle.

The integral type housing, hypoid gear design has the centerline of the pinion set above the centerline of the ring gear.

The Model 30 axle has the assembly part number and gear ratio listed on a tag. The tag is attached to the housing cover (Fig. 4). Build date identification codes are stamped on the axle shaft tube cover side.

XJ and YJ axles are equipped with an optional A.B.S. brake system. The A.B.S. tone rings are pressed onto the axle shaft near the hub and knuckle. For additional information on the A.B.S. system refer to Group 5, Brakes.

- XJ vehicles use a non-disconnect axle.
- YJ vehicles use a vacuum disconnect axle (Fig. 5).

STANDARD DIFFERENTIAL OPERATION

The differential gear system divides the torque between the axle shafts. It allows the axle shafts to rotate at different speeds when turning corners.

Each differential side gear is splined to an axle shaft. The pinion gears are mounted on a pinion mate shaft and are free to rotate on the shaft. The

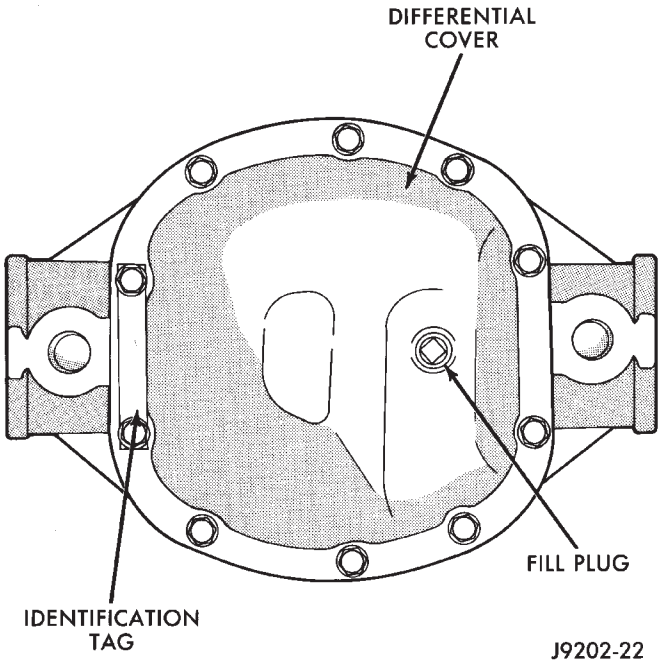

Fig. 4 Model 30 Differential Cover

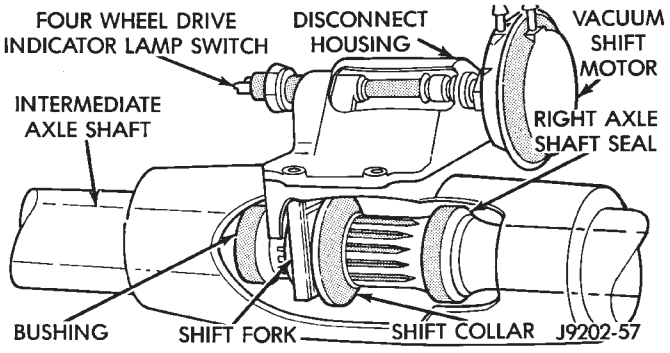

Fig. 5 Disconnect Feature

pinion gear is fitted in a bore in the differential case and is positioned at a right angle to the axle shafts.

In operation, power flow occurs as follows:

- Pinion gear rotates the ring gear
- Ring gear (bolted to the differential case) rotates the case
- Differential pinion gears (mounted on the pinion mate shaft in the case) rotate the side gears
- Side gears (splined to the axle shafts) rotate the shafts

During straight-ahead driving, the differential pinion gears do not rotate on the pinion mate shaft. This occurs because input torque applied to gears is divided and distributed equally between the two side gears. As a result, the pinion gears revolve with the pinion mate shaft but do not rotate around it (Fig. 6).

When turning corners, the outside wheel must travel a greater distance than the inside wheel. This difference must be compensated for in order to prevent the wheels from scuffing and skidding through the turn. To accomplish this, the differential allows

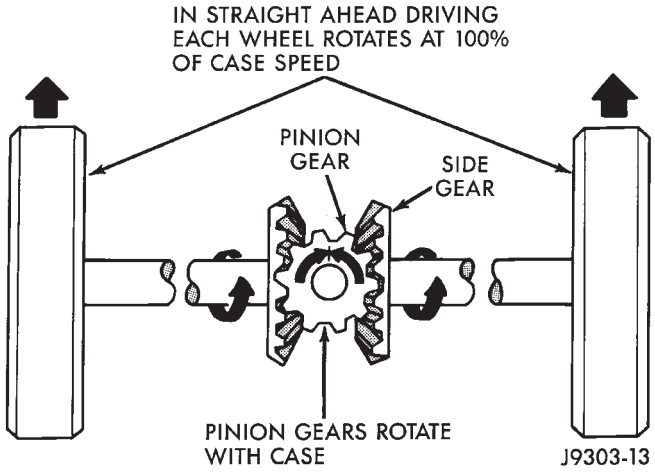

Fig. 6 Differential Operation—Straight-Ahead Driving

the axle shafts to turn at unequal speeds (Fig. 7). In this instance, the input torque applied to the pinion gears is not divided equally. The pinion gears now rotate around the pinion mate shaft in opposite directions. This allows the side gear and axle shaft attached to the outside wheel to rotate at a faster speed.

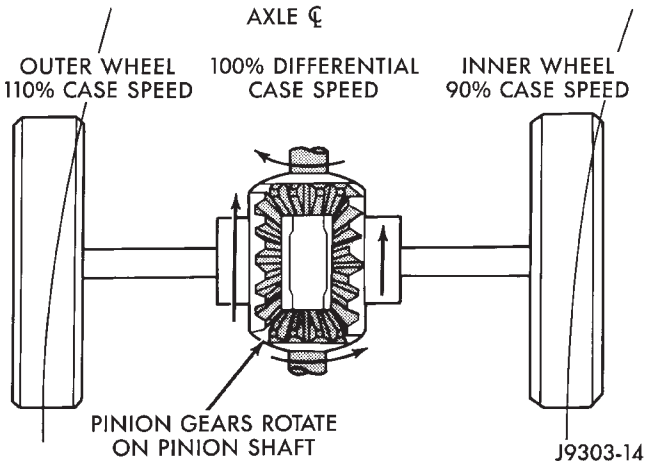

Fig. 7 Differential Operation—On Turns

FRONT WHEEL ALIGNMENT

INDEX

	page		page
Alignment Measurements and Adjustments	8	Pre-Alignment Inspection	6
General Information	5		

GENERAL INFORMATION

Front wheel alignment involves the correct positioning of the wheels in relation to the vehicle. The positioning is accomplished through suspension and steering linkage adjustments. An alignment is considered essential for efficient steering, good directional stability and to maximize tire wear. The most important measurements of front end alignment are caster, camber and toe position.

Routine inspection of the front suspension and steering components is a good preventative maintenance practice. Inspection also helps to ensure safe operation of the vehicle.

• CASTER is the forward or rearward tilt of the steering knuckle from vertical. Tilting the top of the knuckle rearward provides positive caster. Tilting the top of the knuckle forward provides negative caster. Caster is a directional stability angle. This angle enables the front wheels to return to a straight ahead position after turns (Fig. 1).

• CAMBER is the inward or outward tilt of the wheel relative to the center of the vehicle. Tilting the top of the wheel inward provides negative camber. Tilting the top of the wheel outward provides positive camber. Incorrect camber will cause wear on the inside or outside edge of the tire (Fig. 1). The angle is not adjustable, the damaged component(s) must be replaced to correct mis-alignment.

• WHEEL TOE POSITION is the difference between the leading inside edges and trailing inside edges of the front tires (Fig. 1). Incorrect wheel toe position is the most common cause of unstable steering and un-

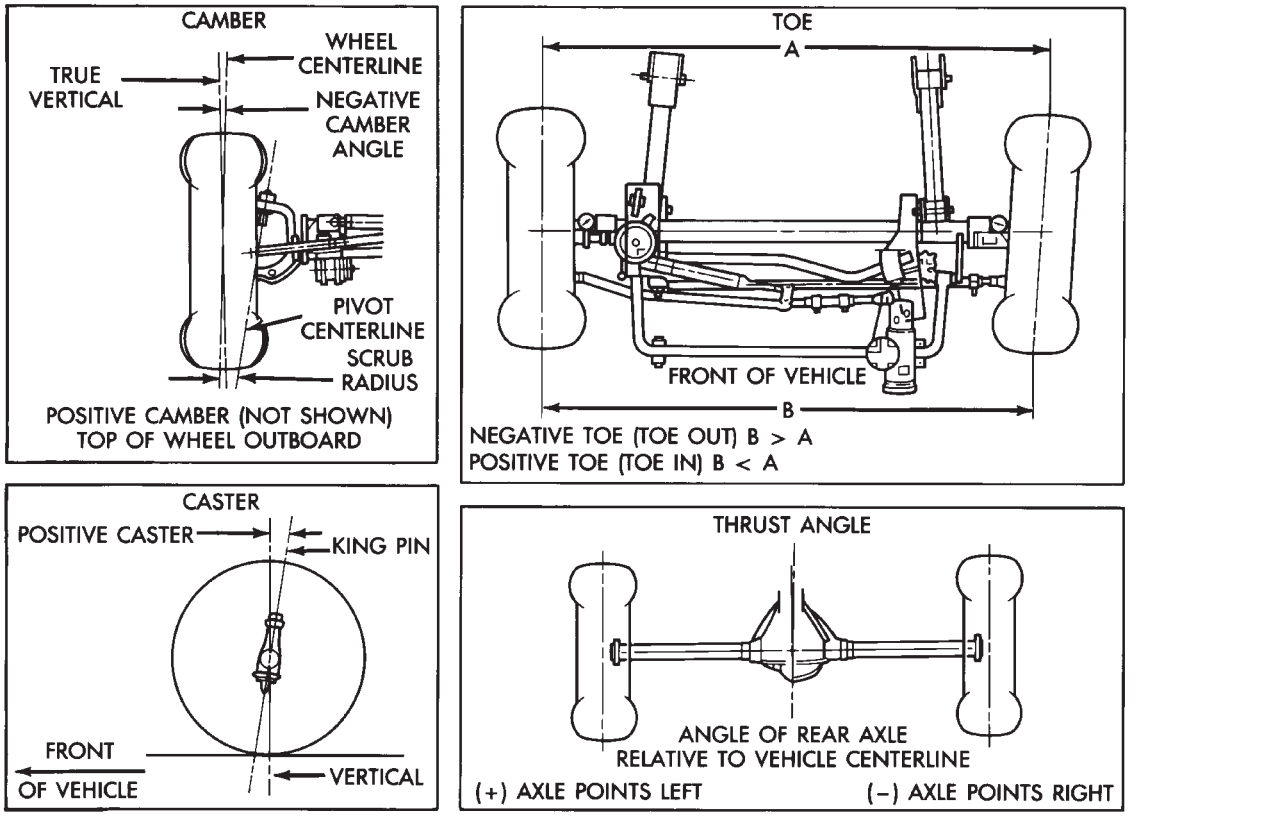

Fig. 1 Wheel Alignment Measurements

even tire wear. The wheel toe position is the **final** front wheel alignment adjustment.

• STEERING AXIS INCLINATION ANGLE is measured in degrees and is the angle that the steering knuckles are tilted (Fig. 1). The inclination angle has a fixed relationship with the camber angle. It will not change except when a spindle or ball stud is damaged or bent. The angle is not adjustable, the damaged component(s) must be replaced to correct misalignment.

WARNING: DO NOT ATTEMPT TO MODIFY ANY SUSPENSION OR STEERING COMPONENT BY HEATING AND BENDING.

PRE-ALIGNMENT INSPECTION

Before starting a front wheel alignment, the following inspection and necessary corrections must be completed.

(1) Tires with the same recommended air pressure, size, and thread wear. Refer to Group 22, Tires And Wheels for diagnosis information.

(2) Front wheel bearings for wear and looseness.

(3) Ball studs, steering linkage pivot points and steering gear for looseness, roughness, binding or wear. Refer to Group 19, Steering for additional information.

(4) Front wheels for excessive radial or lateral runout and unbalance. Refer to Group 22, Tires And Wheels for diagnosis information.

(5) Suspension components for wear. Check components for correct torque. Refer to Groups 2 and 3, Suspension and Axle for additional information.

SUSPENSION AND STEERING SYSTEM DIAGNOSIS

CONDITION	POSSIBLE CAUSES	CORRECTION
FRONT END NOISE	1. Loose or worn front wheel bearings. 2. Loose or worn suspension bushings or components.	1. Adjust or replace wheel bearings. 2. Replace worn bushings or suspension components.
EXCESSIVE PLAY IN STEERING	1. Loose or worn front wheel bearings. 2. Loose or worn steering components. 3. Loose or worn steering gear.	1. Adjust or replace wheel bearings. 2. Replace loose or worn steering components. 3. Adjust or replace steering gear.
FRONT WHEELS SHIMMY	1. Loose or worn front wheel bearings. 2. Loose or worn suspension bushings or components. 3. Tires worn or out of balance. 4. Alignment.	1. Adjust or replace wheel bearings. 2. Replace worn bushings or suspension components. 3. Replace or balance tires as needed. 4. Align front end.
VEHICLE INSTABILITY	1. Loose or worn front wheel bearings. 2. Alignment. 3. Loose or worn suspension bushings or components. 4. Weak or broken spring. 5. Tire pressure.	1. Adjust or replace wheel bearings. 2. Align front end. 3. Replace worn bushings or suspension components. 4. Replace weak or broken spring. 5. Correct tire pressure.
DIFFICULT STEERING	1. Tire pressure. 2. Alignment. 3. Steering gear or pump.	1. Correct tire pressure. 2. Align front end. 3. Adjust or replace steering gear. Test and repair pump as needed.
VEHICLE PULLS TO ONE SIDE	1. Tire pressure. 2. Alignment. 3. Loose or worn suspension bushings or components. 4. Weak or broken spring. 5. Brake pull.	1. Correct tire pressure. 2. Align front end. 3. Replace worn bushings or suspension components. 4. Replace weak or broken spring. 5. Repair brakes.

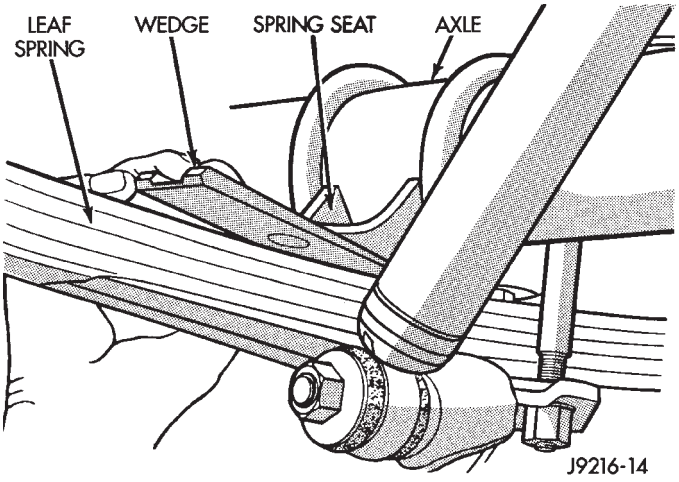

Fig. 2 Adjustment—YJ Vehicles

ALIGNMENT MEASUREMENTS AND ADJUSTMENTS

Before each alignment reading, the vehicle should be jounced (rear first, then front). Grasp each bumper at the center and jounce the vehicle up and down several times. Always release the bumper in the down position. **Set the front end alignment to specifications with the vehicle at its NORMALLY RIDE HEIGHT.**

CAMBER

The wheel camber angle is preset. This angle is not adjustable and cannot be altered.

CASTER

Before checking the caster of the front axle for correct angle, be sure the axle is not bent or twisted.

Road test the vehicle, make left and right turns. If the steering wheel returns to the center position unassisted, the caster angle is correct. If steering wheel does not return toward the center position unassisted, an incorrect caster angle is probable.

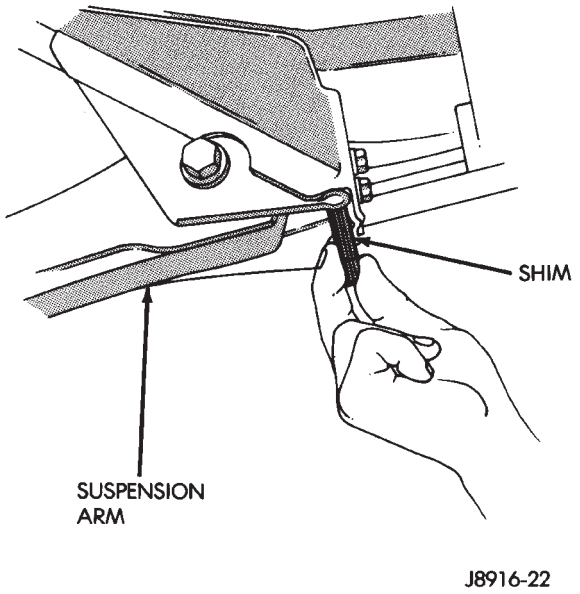

Fig. 3 Adjustment—XJ Vehicles

Caster can be adjusted by installing the appropriate size shims (Fig. 2, 3). **Changing caster angle will also change the front propeller shaft angle. The propeller shaft angle has priority over caster. Refer to Group 16, Propeller Shafts for additional information.**

TOE POSITION—XJ VEHICLES

The wheel toe position adjustment should be the final adjustment.

(1) Start the engine if equipped with power steering. Turn wheels both ways before straightening the

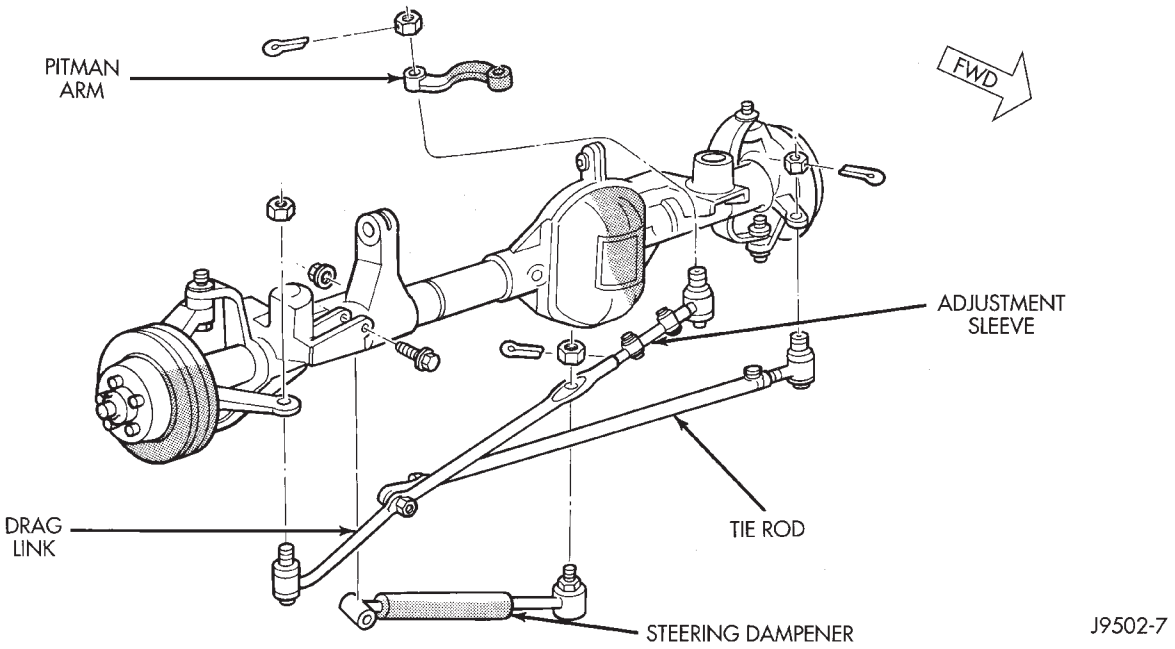

Fig. 4 Steering Linkage—XJ (LHD)

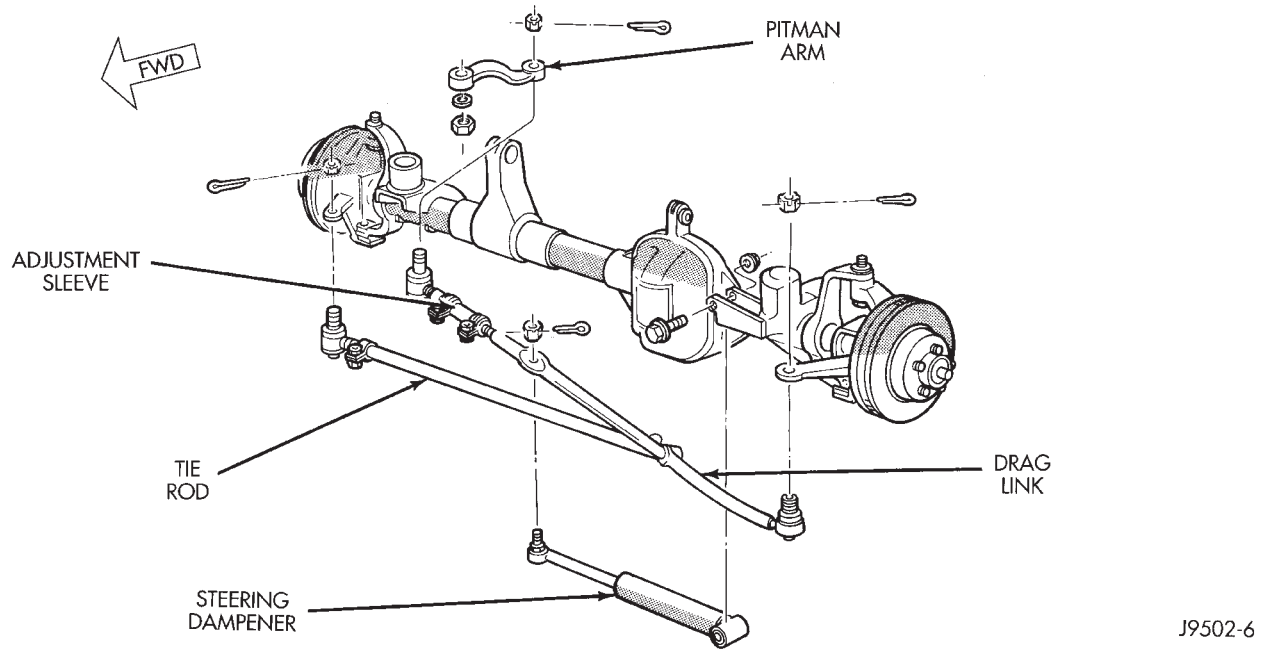

Fig. 5 Steering Linkage—XJ (RHD)

wheels. Secure the steering wheel with the front wheels in the straight-ahead position. Turn off the engine.

(2) Loosen the adjustment sleeve clamp bolts (Fig. 4, 5).

(3) Adjust the right wheel toe position with the drag link. Turn the sleeve until the right wheel is at specifications. Position the clamp bolts as shown (Fig. 6) and tighten to 49 N·m (36 ft. lbs.) torque. **Make sure the toe setting does not change during clamp tightening.**

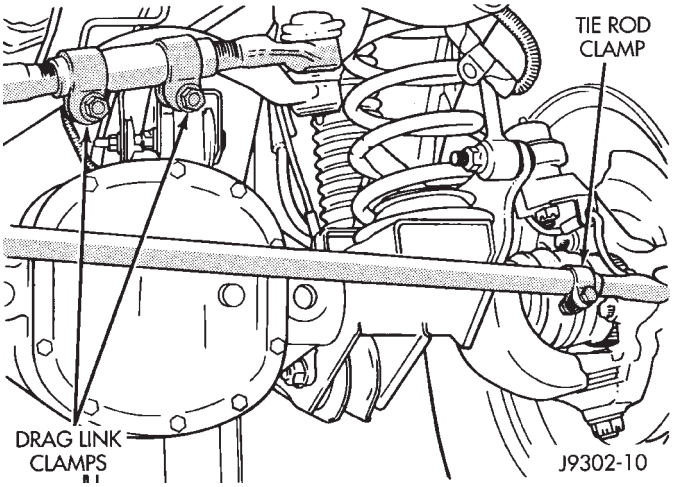

Fig. 6 Drag Link and Tie Rod Clamp Location (LHD)

(4) Adjust the left wheel toe position with the tie rod. Turn the sleeve until the left wheel is at specifications. Position the clamp bolts as shown (Fig. 6) and tighten to 27 N·m (20 ft. lbs.) torque. **Make sure the toe setting does not change during clamp tightening.**

(5) Verify the right toe setting.

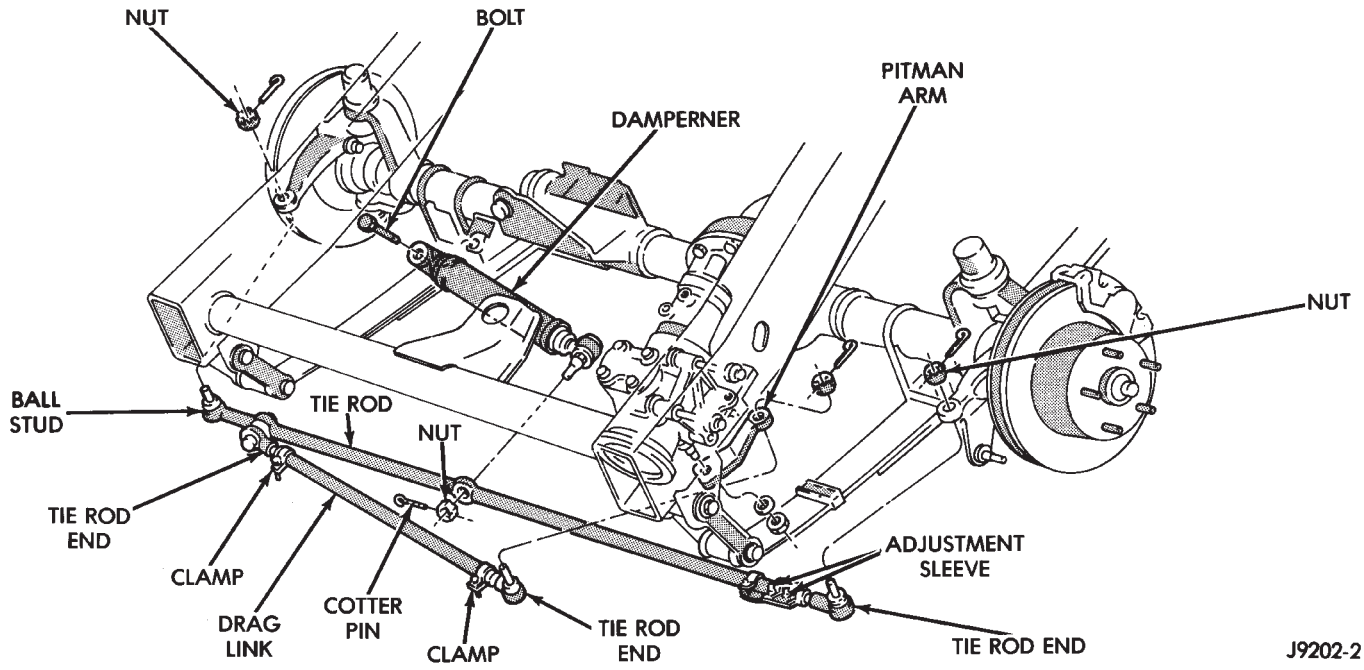

Fig. 7 Steering Linkage
YJ Vehicles

TOE POSITION—YJ VEHICLES

The wheel toe position should be the final front wheel alignment adjustment. In all instances follow the equipment manufacturer's recommended procedure.

(1) Start the engine if equipped with power steering. Turn wheels both ways before straightening the wheels. Secure the steering wheel with the front wheels in the straight-ahead position. Turn off the engine.

(2) Loosen the adjustment sleeve clamp bolts on the tie rod (Fig. 7).

The tie rod and adjustment sleeve have both right and left hand threads to provide equal adjustment for each wheel.

(3) After the adjustment is completed, position the tie rod adjustment sleeve clamp bolts as shown.

(4) Tighten the adjustment sleeve clamp bolts to 27 N·m (20 ft. lbs.) torque.

(5) Complete the adjustment. Position the drag link clamp bolts as shown. Tighten the bolts to 49 N·m (36 ft. lbs.) torque.

ALIGNMENT SPECIFICATIONS—XJ VEHICLES

ADJUSTMENT	SET TO	OK RANGE
CASTER	7.07°	5.25° to 8.0°
CAMBER (not adjustable)	-0.25°	-0.75° to 0.5°
WHEEL TOE-IN (each side)	0°	-0.107° to +0.125°

J9502-9

ALIGNMENT SPECIFICATIONS—YJ VEHICLES

ADJUSTMENT	SET TO	OK RANGE
CASTER Manual Trans. Auto Trans.	6.5° 8.0°	5.25° to 7.25° 6.5° to 9.0°
CAMBER (not adjustable)	0°	- 0.5° to + 0.5°
WHEEL TOE-IN (each side)	0°	- 0.125° to + 0.125°

J9502-8

XJ FRONT SUSPENSION

INDEX

	page
Axle Bushing Replacement	12
Coil Spring	14
Lower Suspension Arm	13
Service Information	11
Shock Absorber	13
Spring and Shock Diagnosis	13
Stabilizer Bar	11
Track Bar	11
Upper Suspension Arm	12

SERVICE INFORMATION

Periodic lubrication of the steering system and suspension components is required. Refer to Group 0, Lubrication And Maintenance for the service interval.

CAUTION: Suspension components with rubber bushings should be tightened with the vehicle at normal height. It is important to have the springs supporting the weight of the vehicle when the fasteners are torqued. If springs are not at their normal ride position, vehicle ride comfort could be affected and premature bushing wear may occur. Rubber bushings must never be lubricated.

TRACK BAR

REMOVAL

(1) Raise and support the vehicle.

(2) Remove the cotter pin and nut from the ball stud end at the frame rail bracket (Fig. 1).

A puller tool may be necessary to separate the ball stud from the frame rail bracket.

(3) Remove the bolt and flag nut from the axle shaft tube bracket (Fig. 1). Remove the track bar.

INSTALLATION

(1) Install the track bar at axle tube bracket. Loosely install the retaining bolt and flag nut (Fig. 1).

(2) It may be necessary to pry the axle assembly over to install the track bar at the frame rail. Install track bar at the frame rail bracket. Install the retaining nut on the stud (Fig. 1).

(3) Remove the supports and lower the vehicle.

(4) Tighten the retaining bolt at the axle shaft tube bracket to 100 N·m (74 ft. lbs.) torque.

(5) Tighten the ball stud nut to 81 N·m (60 ft. lbs.) torque. Install a new cotter pin.

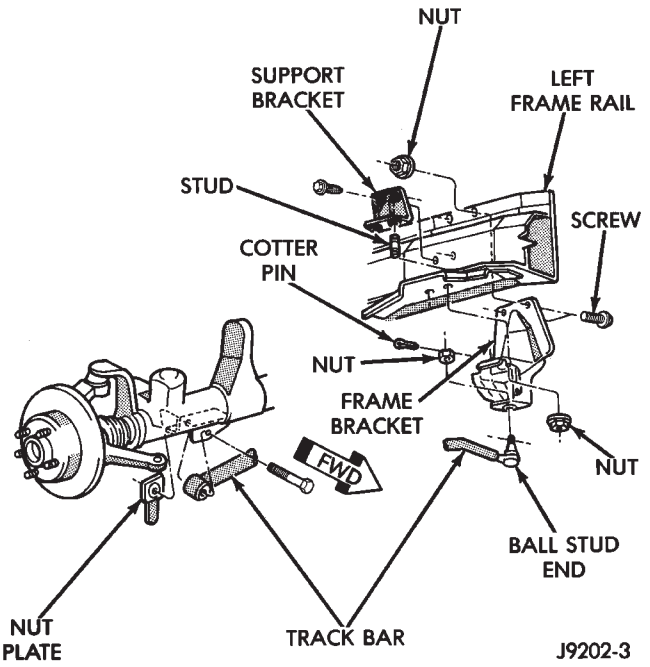

Fig. 1 Track Bar (LHD)

STABILIZER BAR

REMOVAL

(1) Raise and support the vehicle.

(2) Disconnect the stabilizer bar links from the axle brackets (Fig. 2).

(3) Disconnect the stabilizer bar from the links.

(4) Disconnect the stabilizer bar clamps from the frame rails. Remove the stabilizer bar.

INSTALLATION

(1) Inspect stabilizer bar bushings (Fig. 2). Replace bushings if cracked, cut, distorted, or worn.

(2) Position the stabilizer bar on the frame rail and install the bushings and clamps. Ensure the bar is centered with equal spacing on both sides. Tighten the bolts to 75 N·m (40 ft. lbs.).

(3) Install the links and grommets onto the stabilizer bar and axle brackets (Fig. 2). Tighten the nut at the connecting links at the axle bracket to 95 N·m (70 ft. lbs.) torque.

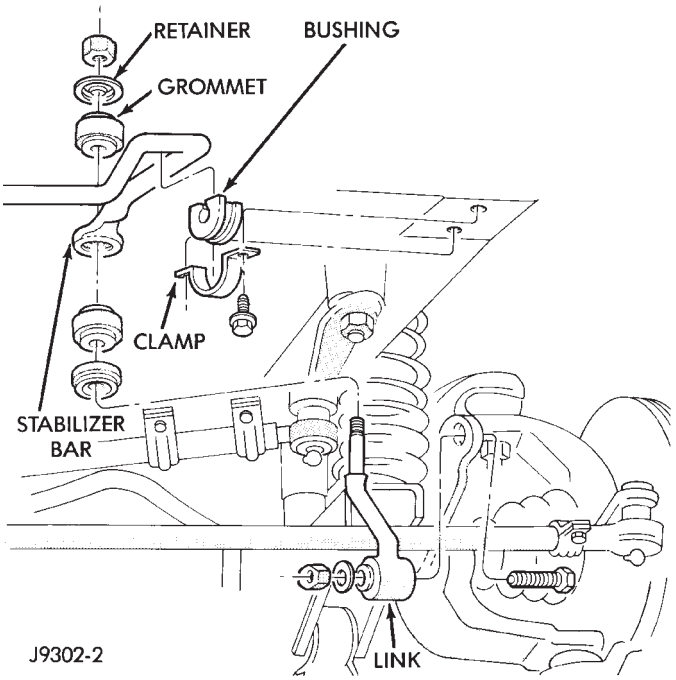

Fig. 2 Stabilizer Bar

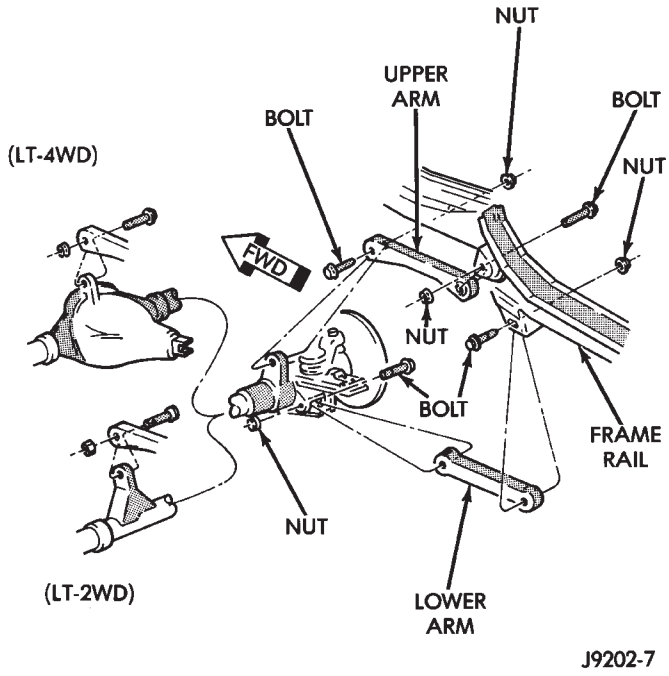

Fig. 3 Upper and Lower Suspension Arms

(3) Tighten the stabilizer bar to connecting link nut to 36 N·m (27 ft. lbs.) torque.

(4) Remove the supports and lower the vehicle.

UPPER SUSPENSION ARM

REMOVAL

(1) Raise and support the vehicle.

(2) Remove the upper suspension arm nut and bolt at the axle bracket (Fig. 3).

(3) Remove the nut and bolt (Fig. 3) at the frame rail and remove the upper suspension arm.

INSTALLATION

(1) Position the upper suspension arm at the axle and frame rail (Fig. 3).

(2) Install the bolts and finger tighten the nuts (Fig. 3).

(3) Remove the supports and lower the vehicle.

(4) Tighten the nut at the axle to 75 N·m (55 ft. lbs.) torque.

Tighten the nut at the frame bracket to 90 N·m (66 ft. lbs.) torque.

AXLE BUSHING REPLACEMENT

(1) Remove the upper suspension arm from axle. Refer to Upper Suspension Arm Removal in this Group.

(2) Insert Spacer 7932-3 (J-35581-3) around the bushing in the axle bracket ears (Fig. 4).

(3) Assemble and install Bushing Removal/Installer (Fig. 4).

(4) Remove the bushing by tightening the hex-head on Long Nut.

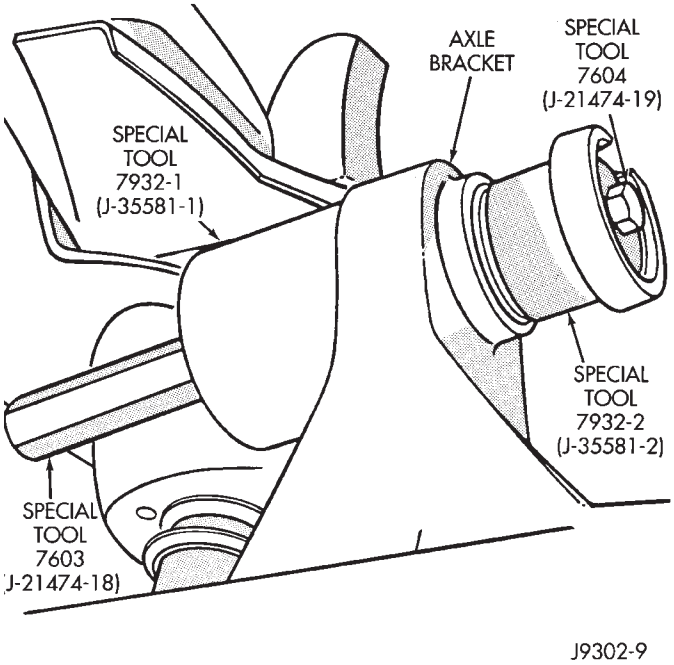

Fig. 4 Axle Bracket Bushing Removal

For two-wheel drive axles and right side on Model 30 axle, do not remove Spacer 7932-3 (J-35581-3) at this time.

(5) Position the new bushing on Installer.

(6) Install the bushing by tightening the hex-head on Long Nut (Fig. 5). Remove Spacer 7932-3 (J-35581-3).

(7) Install the upper suspension arm to axle. Refer to Upper Suspension Arm Installation in this Group.

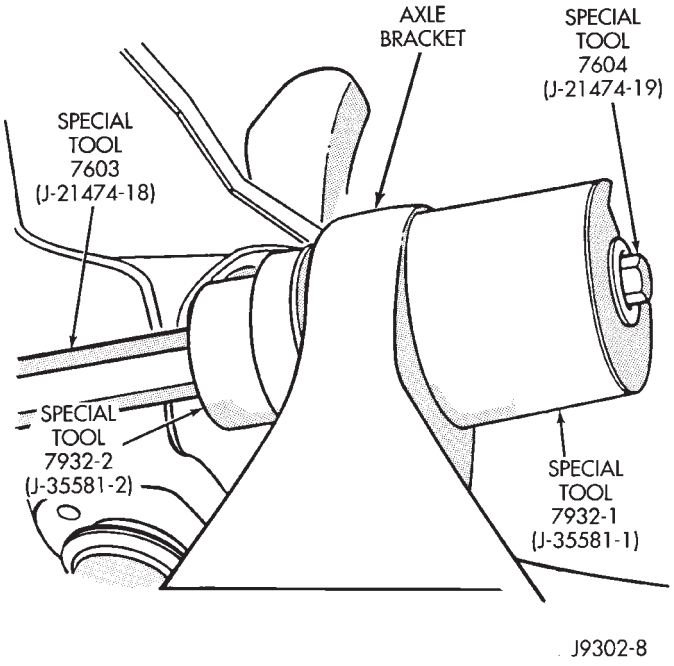

Fig. 5 Axle Bracket Bushing Installation

LOWER SUSPENSION ARM

REMOVAL

(1) Raise and support the vehicle.

(2) Remove the lower suspension arm nut and bolt from the axle bracket (Fig. 3).

(3) Remove the nut and bolt (Fig. 3) from the rear bracket and remove the lower suspension arm.

INSTALLATION

(1) Position the lower suspension arm at the axle bracket and rear bracket (Fig. 3).

(2) Install the bolts and finger tighten the nuts (Fig. 3).

(3) Remove support and lower the vehicle.

(4) Tighten the front and rear nuts to 115 N·m (85 ft. lbs.) torque.

SPRING AND SHOCK DIAGNOSIS

A squeak noise from the shock absorber can be produced if movement between the rubber bushings and the metal occurs. This noise can usually be stopped by tightening the attaching nuts. If the squeak noise persists, inspect for damaged and worn bushings, and attaching components. Repair as necessary.

The shock absorber bushings do not require any type of lubrication. Do not lubricate the bushings to reduce bushing noise. Grease or mineral oil-base lubricants will deteriorate the bushing rubber.

The shock absorbers are not refillable or adjustable. If a malfunction occurs, the shock absorber must be replaced. To test a shock absorber, hold it in an upright position and force the piston into and out of the cylinder four or five times. The action throughout each stroke should be smooth and even.

SHOCK ABSORBER

REMOVAL

(1) Remove the nut, retainer and grommet from the upper stud in the engine compartment (Fig. 6).

(2) Remove the lower nuts and bolts from the axle bracket (Fig. 6). Remove the shock absorber.

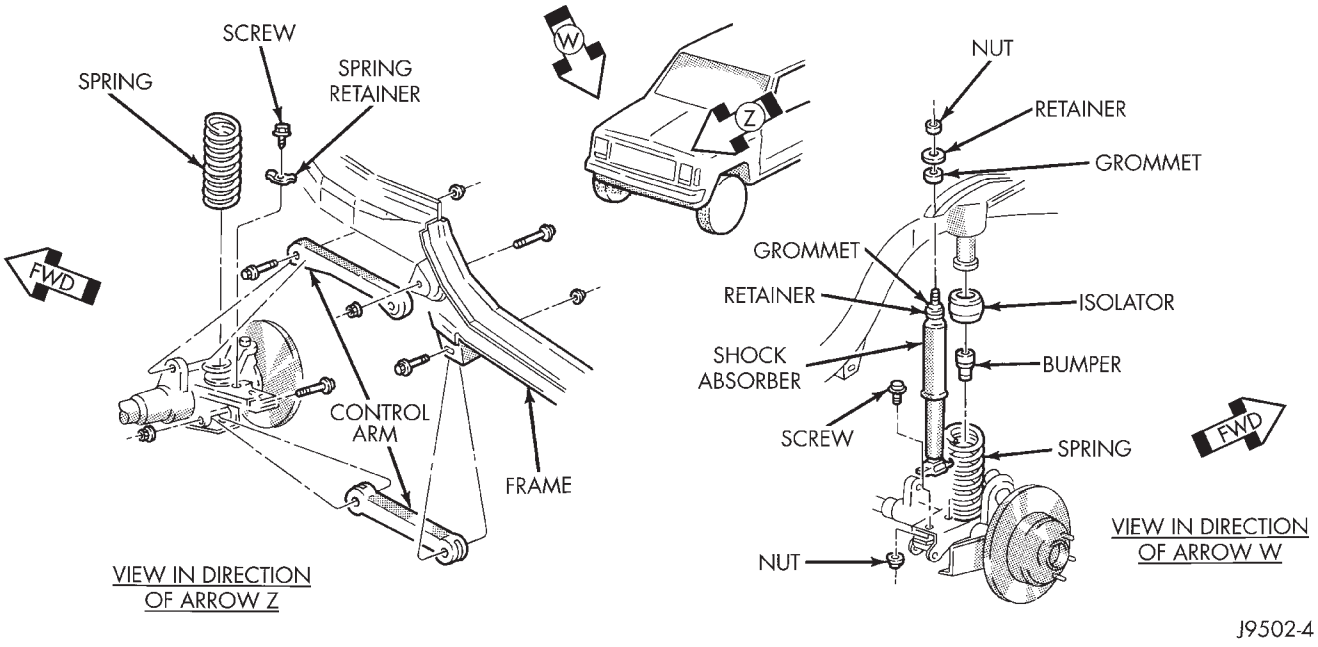

Fig. 6 Coil Spring & Shock Absorber

INSTALLATION

(1) Position the lower retainer and grommet on the upper stud. Insert the shock absorber through the shock tower hole.

(2) Install the lower bolts and nuts. Tighten nuts to 23 N·m (17 ft. lbs.) torque.

(3) Install the upper grommet and retainer on the stud in the engine compartment. Install the nut and tighten to 10 N·m (8 ft. lbs.) torque.

COIL SPRING

REMOVAL

(1) Raise and support the vehicle. Position a hydraulic jack under the axle to support it.

(2) Remove the wheel if necessary.

(3) Mark and disconnect the front propeller shaft from the axle.

(4) Disconnect the lower suspension arms from the axle (Fig. 6).

(5) Disconnect the stabilizer bar link and shock absorber from the axle.

(6) Disconnect the track bar from the frame rail bracket.

(7) Disconnect the drag link from the pitman arm.

(8) Lower the axle until the spring is free from the upper mount. Remove the coil spring clip (Fig. 6) and remove the spring.

(9) Pull jounce bumper out of mount.

INSTALLATION

(1) Install jounce bumper into mount.

(2) Position the coil spring on the axle pad. Install the spring clip and bolt (Fig. 6). Tighten bolt to 21 N·m (16 ft. lbs.) torque.

(3) Raise the axle into position until the spring seats in the upper mount.

(4) Connect the stabilizer bar links and shock absorbers to the axle bracket. Connect the track bar to the frame rail bracket.

(5) Install the lower suspension arms to the axle. DO NOT TIGHTEN AT THIS TIME.

(6) Install the front propeller shaft to the axle.

(7) Remove the supports and lower the vehicle.

(8) Tighten lower suspension arms nuts to 115 N·m (85 ft. lbs.) torque.

YJ FRONT SUSPENSION

INDEX

page

Leaf Spring 16
Leaf Spring Eye Bushing Replacement 17
Service Information 15
Shock Absorber 16
Spring and Shock Diagnosis 15
Stabilizer Bar 15
Track Bar 15

SERVICE INFORMATION

Periodic lubrication of the steering system and suspension components is required. Refer to Group 0, Lubrication And Maintenance for the service interval.

CAUTION: Suspension components with rubber bushings should be tightened with the vehicle at normal height. It is important to have the springs supporting the weight of the vehicle when the fasteners are torqued. If springs are not at their normal ride position, vehicle ride comfort could be affected and premature bushing wear may occur. Rubber bushings must never be lubricated.

TRACK BAR

REMOVAL

(1) Raise and support the vehicle.

(2) Remove the retaining nuts and bolts (Fig. 1) from the axle bracket and frame bracket. Remove track bar.

INSTALLATION

(1) Position track bar at axle shaft tube bracket. Loosely install the retaining bolt and nut (Fig. 1).

(2) Loosely install the retaining bolt and nut at the frame bracket.

(3) Remove support and lower vehicle.

(4) Tighten the retaining nut at the axle shaft tube bracket to 100 N·m (74 ft. lbs.) torque.

(5) Tighten the retaining nut at the frame bracket to 142 N·m (105 ft. lbs.) torque.

STABILIZER BAR

REMOVAL

(1) Raise and support the vehicle.

(2) Remove the retaining nut from the connecting link bolt (Fig. 2).

(3) Remove the retaining clamps from frame rails

(4) Remove the stabilizer bar.

INSTALLATION

(1) Inspect the stabilizer bar bushings (Fig. 2). Replace the bushings if cracked, cut, distorted, or worn.

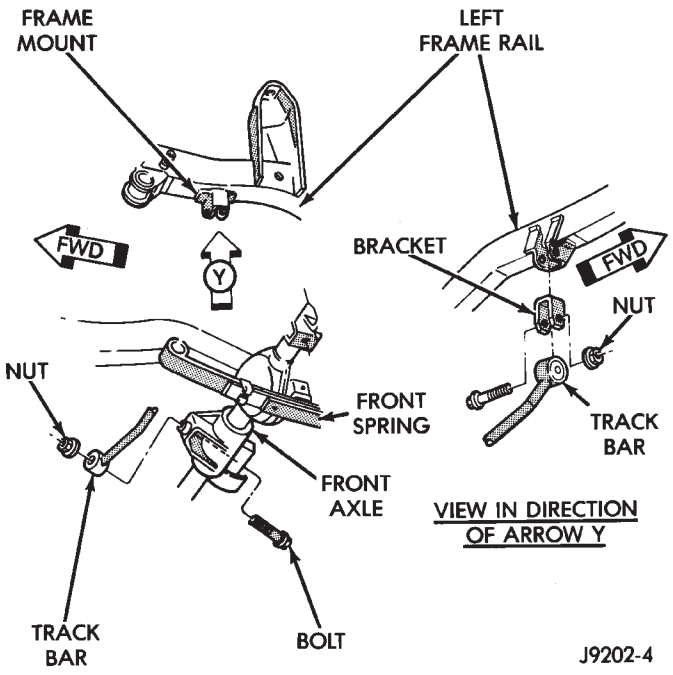

Fig. 1 Track Bar

(2) Position the stabilizer bar on the frame. Install the retaining brackets and fasteners. Tighten bolts to 41 N·m (30 ft. lbs.) torque.

(3) Install the link upper bolts and nuts. Tighten the nuts to 61 N·m (45 ft. lbs.) torque.

(4) Tighten the link spring bracket nuts to 61 N·m (45 ft. lbs.) torque.

(5) Lower the vehicle.

SPRING AND SHOCK DIAGNOSIS

A squeak noise from the shock absorber or springs can be produced if movement between the rubber bushings and the metal occurs. This noise can usually be stopped by tightening the attaching nuts. If the squeak noise persists, inspect for damaged and worn bushings, and attaching components. Repair as necessary if any of these conditions exist.

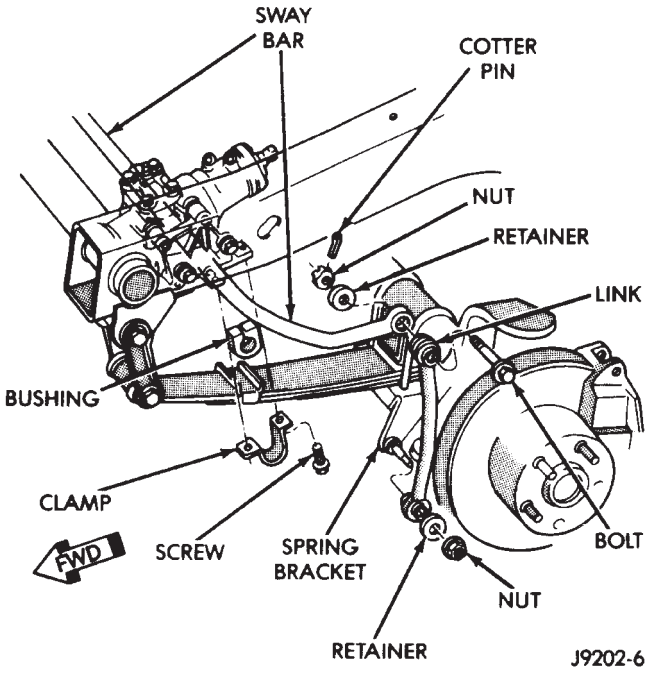

Fig. 2 Stabilizer Bar

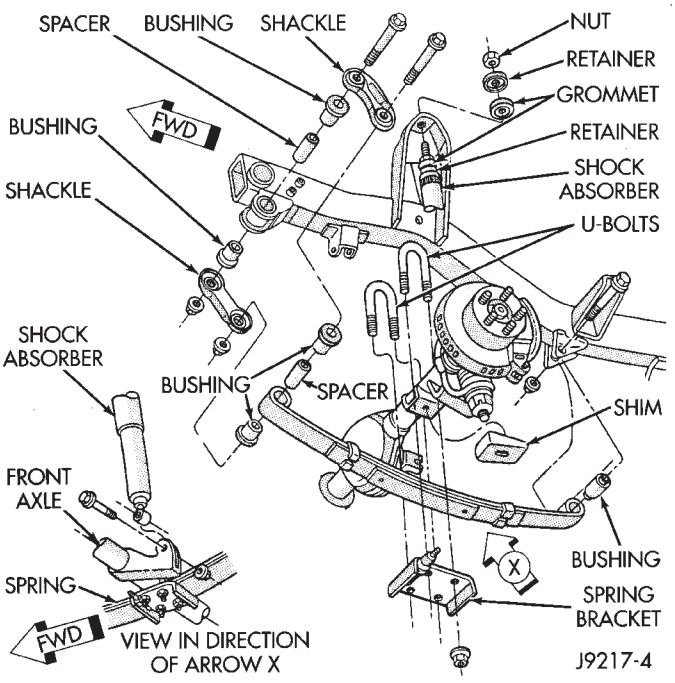

Fig. 3 Spring & Shock Absorber

The shock absorber bushings do not require any type of lubrication. Do not lubricate the bushings to reduce bushing noise. Grease or mineral oil-base lubricants will deteriorate the bushing rubber.

The shock absorbers are not refillable or adjustable. If a malfunction occurs, the shock absorber must be replaced. To test a shock absorber, hold it in an upright position and force the piston into and out of the cylinder four or five times. The action throughout each stroke should be smooth and even.

SHOCK ABSORBER

REMOVAL

(1) Remove the nut, retainer and grommet from the upper stud on the frame bracket (Fig. 3).

(2) Raise and support the vehicle.

(3) Remove the nut, washers and bolt from the shock absorber lower eye (Fig.3).

(4) Remove the shock absorber.

(5) Remove the remaining grommet and retainer from the shock absorber stud.

INSTALLATION

(1) Position the lower retainer and grommet on the upper stud. Insert the shock absorber through the shock tower hole.

(2) Install the lower bolts and nuts. Tighten the nuts to 61 N·m (45 ft. lbs.) torque.

(3) Install the upper grommet and retainer on the stud on the frame bracket. Install the nut and tighten to 12 N·m (9 ft. lbs.) torque.

LEAF SPRING

REMOVAL

(1) Raise the vehicle.

(2) Support the vehicle with jack stands placed under the frame.

(3) Position a hydraulic jack under the axle. Raise the axle to relieve the axle weight from the springs.

(4) Remove the stabilizer bar links attaching nut.

(5) Remove the nuts, the U-bolts and spring bracket from the axle.

(6) Remove the nut and bolt that attaches the spring front eye to the shackle (Fig. 3).

(7) Remove the nut and bolt from the spring rear eye.

(8) Remove the spring from the vehicle.

The spring can be disassembled by removing the spring clips and the center bolt. If the spring bushings require replacement, refer to the bushing removal and installation procedures.

INSTALLATION

(1) Position the spring front eye in the shackle. Loosely install the attaching bolt and nut. Do not tighten at this time.

(2) Position the rear eye in the hanger bracket. Loosely install the attaching bolt and nut (Fig. 3). Do not tighten at this time.

(3) Position the axle. Install the spring bracket, U-bolts and nuts (Fig. 3). Tighten the U-bolt nuts to 122 N·m (90 ft. lbs.) torque.

(4) Attach the stabilizer bar links.

(5) Remove the hydraulic jack.

(6) Remove the support stands and lower the vehicle.

(7) Tighten the front shackle plate nut (Fig. 3) to 135 N·m (100 ft. lbs.) torque.

(8) Tighten the rear eye bracket nut to 142 N·m (105 ft. lbs.) torque.

LEAF SPRING EYE BUSHING REPLACEMENT

(1) Assemble tools shown (Fig. 4). Tighten the nut located at the socket wrench end of the threaded rod until the bushing is forced out.

(2) Assemble and align the bushing installation tools.

(3) Align the bushing with the spring eye and tighten the nut located at the socket wrench end of the threaded rod. Tighten until the bushing is forced into the spring eye.

The bushing must be centered in the spring eye. The ends of the bushing must be flush or slightly recessed within the end surfaces of the spring eye.

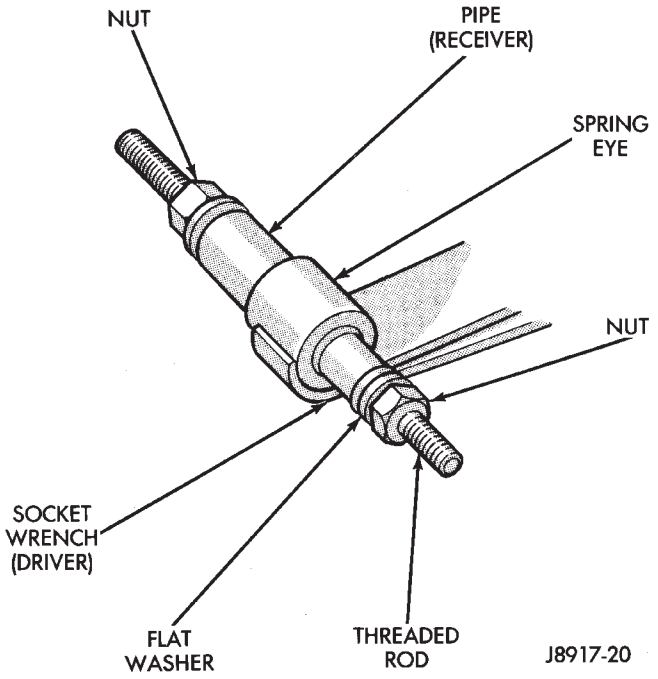

Fig. 4 Spring Eye Bushing Removal

AXLE NOISE/VIBRATION DIAGNOSIS

INDEX

page

Driveline Snap 19
Gear and Bearing Noise 18
General Information 18
Low Speed Knock 19
Vibration 19

GENERAL INFORMATION

Axle bearing problem conditions are usually caused by:

- Insufficient or incorrect lubricant
- Foreign matter/water contamination
- Incorrect bearing preload torque adjustment
- Incorrect backlash (to tight)

When serviced, the bearings must be cleaned thoroughly. They should be dried with lint-free shop towels. **Never dry bearings with compressed air. This will overheat them and brinell the bearing surfaces. This will result in noisy operation after repair.**

Axle gear problem conditions are usually the result of:

- Insufficient lubrication
- Incorrect or contaminated lubricant
- Overloading (excessive engine torque) or exceeding vehicle weight capacity
- Incorrect clearance or backlash adjustment

Insufficient lubrication is usually the result of a housing cover leak. It can also be from worn axle shaft or pinion gear seals. Check for cracks or porous areas in the housing or tubes.

Using the wrong lubricant will cause overheating and gear failure. Gear tooth cracking and bearing spalling are indicators of this.

Axle component breakage is most often the result of:

- Severe overloading
- Insufficient lubricant
- Incorrect lubricant
- Improperly tightened components

Overloading occurs when towing heavier than recommended loads. Component breakage can occur when the wheels are spun excessively. Incorrect lubricant quantity contributes to breakage. Loose differential components can also cause breakage.

Incorrect bearing preload or gear backlash will not result in component breakage. Mis-adjustment will produce enough noise to cause service repair before a failure occurs. If a mis-adjustment condition is not corrected, component failure can result.

Excessive bearing preload may not be noisy. This condition will cause high temperature which can result in bearing failure.

GEAR AND BEARING NOISE

GEAR NOISE

Axle gear noise can be caused by insufficient lubricant. Incorrect backlash, tooth contact, or worn/damaged gears can cause noise.

Gear noise usually happens at a specific speed range. The range is 30 to 40 mph, or above 50 mph. The noise can also occur during a specific type of driving condition. These conditions are acceleration, deceleration, coast, or constant load.

When road testing, accelerate the vehicle to the speed range where the noise is the greatest. Shift out-of-gear and coast through the peak-noise range. If the noise stops or changes greatly, check for insufficient lubricant. Incorrect ring gear backlash, or gear damage can cause noise changes.

Differential side and pinion gears can be checked by turning the vehicle. They usually do not cause noise in straight-ahead driving. These gears are loaded during vehicle turns. If noise does occur during vehicle turns, the side or pinion gears could be worn or damaged. A worn pinion gear mate shaft can also cause a snapping or a knocking noise.

BEARING NOISE

The axle shaft, differential and pinion gear bearings can all produce noise when worn or damaged. Bearing noise can be either a whining, or a growling sound.

Pinion gear bearings have a constant-pitch noise. This noise changes only with vehicle speed. Pinion bearing noise will be higher because it rotates at a faster rate. Drive the vehicle and load the differential. If bearing noise occurs the pinion rear bearing is the source of the noise. If the bearing noise is heard during a coast, front bearing is the source.

Worn, damaged differential bearings usually produce a low pitch noise. Differential bearing noise is similar to pinion bearing. The pitch of differential bearing noise is also constant and varies only with vehicle speed.

Axle shaft bearings produce noise and vibration when worn or damaged. The noise generally changes when the bearings are loaded. Road test the vehicle. Turn the vehicle sharply to the left and to the right. This will load the bearings and change the noise level. Where axle bearing damage is slight, the noise is usually not noticeable at speeds above 30 mph.

LOW SPEED KNOCK

Low speed knock is generally caused by a worn U-joint or by worn side-gear thrust washers. A worn pinion gear shaft bore will also cause low speed knock.

VIBRATION

Vibration at the rear of the vehicle is usually caused by a:

- Damaged drive shaft
- Missing drive shaft balance weight
- Worn, out-of-balance wheels
- Loose wheel lug nuts
- Worn U-joint
- Loose spring U-bolts
- Loose/broken springs
- Damaged axle shaft bearings
- Loose pinion gear nut
- Excessive pinion yoke run out
- Bent axle shaft

Check for loose or damaged front-end components or engine/transmission mounts. These components can contribute to what appears to be a rear-end vibration. Do not overlook engine accessories, brackets and drive belts.

All driveline components should be examined before starting any repair.

Refer to Group 22—Tires And Wheels for additional information involving vibration diagnosis.

DRIVELINE SNAP

A snap or clunk noise when the vehicle is shifted into gear (or the clutch engaged), can be caused by:

- High engine idle speed
- Loose engine/transmission/transfer case mounts
- Worn U-joints
- Loose spring mounts
- Loose pinion gear nut and yoke
- Excessive ring gear backlash
- Excessive differential side gear-to-case clearance

The source of a snap or a clunk noise can be determined with the assistance of a helper. Raise the vehicle on a hoist with the wheels free to rotate. Instruct the helper to shift the transmission into gear. Listen for the noise, a mechanics stethoscope is helpful in isolating the source of a noise.

SERVICE DIAGNOSIS

CONDITION	POSSIBLE CAUSES	CORRECTION
WHEEL NOISE	1. Wheel loose. 2. Faulty, brinelled wheel bearing.	1. Tighten loose nuts. 2. Faulty or brinelled bearings must be replaced.
AXLE SHAFT NOISE	1. Misaligned axle shaft tube. 2. Bent or sprung axle shaft. 3. End play in drive pinion bearings. 4. Excessive gear backlash between ring gear and pinion gear. 5. Improper adjustment of drive pinion gear shaft bearings. 6. Loose drive pinion gearshaft yoke nut. 7. Improper wheel bearing adjustment. 8. Scuffed gear tooth contact surfaces.	1. Inspect axle shaft tube alignment. Correct as necessary. 2. Replace bent or sprung axle shaft. 3. Refer to Drive Pinion Bearing Pre-Load Adjustment. 4. Check adjustment of ring gear backlash and pinion gear. Correct as necessary. 5. Adjust drive pinion shaft bearings. 6. Tighten drive pinion gearshaft yoke nut with specified torque. 7. Readjust as necessary. 8. If necessary, replace scuffed gears.
AXLE SHAFT BROKE	1. Misaligned axle shaft tube. 2. Vehicle overloaded. 3. Erratic clutch operation. 4. Grabbing clutch.	1. Replace broken axle shaft after correcting axle shaft tube alignment. 2. Replace broken axle shaft. Avoid excessive weight on vehicle. 3. Replace broken axle shaft after inspecting for other possible causes. Avoid erratic use of clutch. 4. Replace broken axle shaft. Inspect clutch and make necessary repairs or adjustments.
DIFFERENTIAL CASE CRACKED	1. Improper adjustment of differential bearings. 2. Excessive ring gear backlash. 3. Vehicle overloaded. 4. Erratic clutch operation.	1. Replace cracked case; examine gears and bearings for possible damage. At reassembly, adjust differential bearings properly. 2. Replace cracked case; examine gears and bearings for possible damage. At reassembly, adjust ring gear backlash properly. 3. Replace cracked case; examine gears and bearings for possible damage. Avoid excessive weight on vehicle. 4. Replace cracked case. After inspecting for other possible causes, examine gears and bearings for possible damage. Avoid erratic use of clutch.
DIFFERENTIAL GEARS SCORED	1. Insufficient lubrication. 2. Improper grade of lubricant. 3. Excessive spinning of one wheel/tire.	1. Replace scored gears. Scoring marks on the drive face of gear teeth or in the bore are caused by instantaneous fusing of the mating surfaces. Scored gears should be replaced. Fill rear differential housing to required capacity with proper lubricant. Refer to Specifications. 2. Replace scored gears. Inspect all gears and bearings for possible damage. Clean and refill differential housing to required capacity with proper lubricant. 3. Replace scored gears. Inspect all gears, pinion bores and shaft for damage. Service as necessary.
LOSS OF LUBRICANT	1. Lubricant level too high.	1. Drain excess lubricant by removing fill plug and allow lubricant to level at lower edge of fill plug hole.

SERVICE DIAGNOSIS (CONT'D)

CONDITION	POSSIBLE CAUSES	CORRECTION
LOSS OF LUBRICANT	2. Worn axle shaft seals. 3. Cracked differential housing. 4. Worn drive pinion gear shaft seal. 5. Scored and worn yoke. 6. Axle cover not properly sealed.	2. Replace worn seals. 3. Repair or replace housing as necessary. 4. Replace worn drive pinion gear shaft seal. 5. Replace worn or scored yoke and seal. 6. Remove cover and clean flange and reseal.
AXLE OVERHEATING	1. Lubricant level too low. 2. Incorrect grade of lubricant. 3. Bearings adjusted too tight. 4. Excessive gear wear. 5. Insufficient ring gear backlash.	1. Refill differential housing. 2. Drain, flush and refill with correct amount of the correct lubricant. 3. Readjust bearings. 4. Inspect gears for excessive wear or scoring. Replace as necessary. 5. Readjust ring gear backlash and inspect gears for possible scoring.
GEAR TEETH BROKE (RING GEAR AND PINION)	1. Overloading. 2. Erratic clutch operation. 3. Ice-spotted pavements. 4. Improper adjustments.	1. Replace gears. Examine other gears and bearings for possible damage. 2. Replace gears and examine the remaining parts for possible damage. Avoid erratic clutch operation. 3. Replace gears. Examine the remaining parts for possible damage. Replace parts as required. 4. Replace gears. Examine other parts for possible damage. Ensure ring gear backlash is correct.
AXLE NOISE	1. Insufficient lubricant. 2. Improper ring gear and drive pinion gear adjustment. 3. Unmatched ring gear and drive pinion gear. 4. Worn teeth on ring gear or drive pinion gear. 5. Loose drive pinion gear shaft bearings. 6. Loose differential bearings. 7. Misaligned or sprung ring gear. 8. Loose differential bearing cap bolts	1. Refill axle with correct amount of the proper lubricant. Also inspect for leaks and correct as necessary. 2. Check ring gear and pinion gear teeth contact pattern. 3. Remove unmatched ring gear and drive pinion gear. Replace with matched gear and drive pinion gear set. 4. Check teeth on ring gear and drive pinion gear for correct contact. If necessary, replace with new matched set. 5. Adjust drive pinion gearshaft bearing preload torque. 6. Adjust differential bearing preload torque. 7. Measure ring gear runout. 8. Tighten with specified torque

MODEL 30 AXLE AND TUBE AXLE (2WD)

INDEX

	page
Axle Bushing Replacement	34
Axle Shaft—Cardan U-Joint	26
Backlash and Contact Pattern Analysis	45
Cleaning/Inspection	37
Differential and Pinion Measurement	40
Differential Assembly	38
Differential Disassembly	35
Differential Installation	44
Differential Removal	34
Differential Shim Pack Measurement and Adjustment	43
Drive Axle Assembly Replacement—XJ Vehicles	23
Drive Axle Assembly Replacement—YJ Vehicles	24
Final Assembly	46
Hub Bearing and Axle Shaft	25
Information	22
Inner Axle Shaft Oil Seal Replacement	35
Lubricant Change	23
Lubricant Specifications	22
Pinion Gear Assembly/Installation	42
Pinion Gear Depth Information	39
Pinion Removal/Disassembly	36
Pinion Seal Replacement	25
Steering Knuckle and Ball Studs	32
Vacuum Disconnect Axle—YJ Vehicles	27

INFORMATION

The Model 30 front axles consists of a cast iron differential housing with axle shaft tubes extending from either side. The tubes are pressed into the differential housing and welded.

The integral type housing, hypoid gear design has the centerline of the pinion set above the centerline of the ring gear.

The axle has a fitting for a vent hose used to relieve internal pressure caused by lubricant vaporization and internal expansion.

The axles are equipped with semi-floating axle shafts, meaning that loads are supported by the hub bearings. The axle shafts are retained by nuts at the hub bearings. The hub bearings are bolted to the steering knuckle at the outboard end of the axle tube yoke. The hub bearings are serviced as an assembly.

The axles are equipped with ABS brake sensors. The sensors are attached to the knuckle assemblies and tone rings are pressed on the axle shaft. **Use care when removing axle shafts as NOT to damage the tone wheel or the sensor.**

The stamped steel cover provides a means for inspection and servicing the differential.

The Model 30 axle has the assembly part number and gear ratio listed on a tag. The tag is attached to the housing cover. Build date identification codes are stamped on the axle shaft tube cover side.

The differential case is a one-piece design. The differential pinion mate shaft is retained with a roll pin. Differential bearing preload and ring gear backlash is adjusted by the use of shims (select thickness). The shims are located between the differential bearing cones and case. Pinion bearing preload is set and maintained by the use of collapsible spacer.

COMMAND-TRAC—YJ VEHICLES

The Command-Trac system is a vacuum disconnect axle. The system has a two-piece axle shaft coupled together by a shift collar. For two-wheel drive operation, the vacuum motor and shift fork disengages the axle shaft splines. For four-wheel drive operation, the vacuum motor and shift fork engages the axle splines.

SELEC-TRAC—XJ VEHICLES

The Selec-Trac system is a non-disconnect axle. Shifting from two-wheel to four-wheel drive is done at the transfer case.

For XJ vehicles equipped with **Selec-Trac** and ABS brake system, refer to Group 5—Brakes for additional service information.

LUBRICANT SPECIFICATIONS

Multi-purpose, hypoid gear lubricant should be used for Model 30 axles. The lubricant should have MIL-L-2105C and API GL 5 quality specifications. MOPAR® Hypoid Gear Lubricant conforms to both of these specifications.

- The factory fill for the Model 30 axle is SAE Thermally Stable 80W-90 gear lubricant. **Do not use heavier weight lubricant, this will cause axle engagement difficulties.**
- The factory installed lubricant quantity for the NON-DISCONNECT TYPE AXLE is 1.48 L (3.13 pts.).
- The factory installed lubricant quantity for the VACUUM-DISCONNECT TYPE AXLE is 1.65 L (3.76 pts.).

Refer to Group 0, Lubrication and Maintenance for additional information regarding temperature range, viscosity and fluid level.

CAUTION: If axle is submerged in water, lubricant must be replaced immediately to avoid possible premature axle failure.

LUBRICANT CHANGE

The gear lubricant will drain quicker if the vehicle has been recently driven.

(1) Raise and support the vehicle.

(2) Remove the lubricant fill hole plug from the differential housing cover.

(3) Remove the differential housing cover and drain the lubricant from the housing.

(4) Clean the housing cavity with a flushing oil, light engine oil or lint free cloth. **Do not use water, steam, kerosene or gasoline for cleaning.**

(5) Remove the sealant from the housing and cover surfaces. Use solvent to clean the mating surfaces.

(6) Apply a bead of MOPAR® Silicone Rubber Sealant to the housing cover (Fig. 1). **Allow the sealant to cure for a few minutes.**

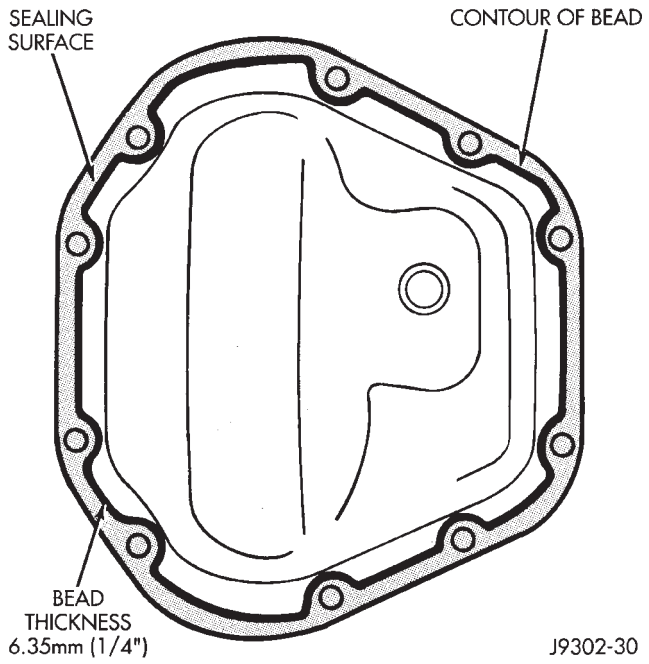

Fig. 1 Typical Housing Cover With Sealant

Install the housing cover within 5 minutes after applying the sealant. If not installed the sealant must be removed and another bead applied.

(7) Install the cover and any identification tag. Tighten the cover bolts in a criss-cross pattern to 41 N·m (30 ft. lbs.) torque.

(8) Refill the differential with MOPAR® Hypoid Gear Lubricant to bottom of the fill plug hole.

(9) Install the fill hole plug and lower the vehicle.

DRIVE AXLE ASSEMBLY REPLACEMENT—XJ VEHICLES

REMOVAL

(1) Raise the vehicle and position support stands under the frame rails behind the lower suspension arm frame brackets.

(2) Remove the front wheels.

(3) Remove the brake components and ABS brake sensor (if equipped). Refer to Group 5—Brakes.

(4) On 4WD vehicles, disconnect the axle vent hose.

(5) On 4WD vehicles, mark the drive shaft yoke and axle pinion yoke for alignment reference. Disconnect the drive shaft from the axle.

(6) Disconnect the stabilizer bar link at the axle bracket.

(7) Disconnect the shock absorbers from axle bracket.

(8) Disconnect the track bar from the axle bracket.

(9) Disconnect the tie rod and drag link from the steering knuckle. Disconnect the steering damper from the axle bracket.

(10) Support the axle with a hydraulic jack under the differential.

(11) Disconnect the upper and lower suspension arms from the axle bracket.

(12) Lower the jack enough to remove the axle. The coil springs will drop with the axle.

(13) Remove the coil springs from the axle bracket.

INSTALLATION

CAUTION: Suspension components with rubber bushings should be tightened with the vehicle at normal height. It is important to have the springs supporting the weight of the vehicle when the fasteners are torqued. If springs are not at their normal ride position, vehicle ride comfort could be affected and premature bushing wear may occur. Rubber bushings must never be lubricated.

(1) Install the springs and retainer clip. Tighten the retainer bolts to 21 N·m (16 ft. lbs.) torque.

(2) Support the axle on a hydraulic jack under the differential. Position the axle under the vehicle.

(3) Raise the axle with a floor jack and align it with the spring pads.

(4) Position the upper and lower suspension arm at the axle bracket. Install bolts and nuts finger tighten.

(5) Connect the track bar to the axle bracket and install the bolt. **Do not tighten at this time.**

It is important that the springs support the weight of the vehicle when the track bar is connected. If springs are not at their usual position, vehicle ride comfort could be affected.

(6) Install the shock absorber and tighten the bolt to 23 N·m (17 ft. lbs.) torque.

(7) Install the stabilizer bar link to the axle bracket. Tighten the nut to 95 N·m (70 ft. lbs.) torque.

(8) Install the drag link and tie rod to the steering knuckles and tighten the nuts to 47 N·m (35 ft. lbs.) torque. Install the steering damper to the axle bracket and tighten the nut to 75 N·m (55 ft. lbs.) torque.

(9) Install the brake components and ABS brake sensor (if equipped). Refer to Group 5—Brakes.

(10) On 4WD vehicles, connect the vent hose to the tube fitting.

(11) On 4WD vehicles, align the reference marks and connect the drive shaft to the axle yoke. Tighten the U-joint clamp bolts to 19 N·m (14 ft. lbs.) torque.

(12) Check differential lubricant and add if necessary.

(13) Install the wheel and tire assemblies.

(14) Remove the supports and lower the vehicle.

(15) Tighten the upper suspension arm nuts to 75 N·m (55 ft. lbs.) torque. Tighten the lower suspension arm nuts to 115 N·m (85 ft. lbs.) torque.

(16) Tighten the track bar bolt at the axle bracket to 100 N·m (74 ft. lbs.) torque.

(17) Check the front wheel alignment.

DRIVE AXLE ASSEMBLY REPLACEMENT—YJ VEHICLES

REMOVAL

(1) Raise the vehicle and position support stands under the frame rails behind the spring frame brackets.

(2) Remove the front wheels.

(3) Remove the brake components and ABS brake sensor (if equipped). Refer to Group 5—Brakes.

(4) Disconnect the axle vent hose and axle shift motor vacuum harness.

(5) Mark the drive shaft yoke and axle pinion yoke for alignment reference. Disconnect the drive shaft from the axle.

(6) Disconnect the stabilizer bar link at the axle bracket.

(7) Disconnect the shock absorbers from axle bracket.

(8) Disconnect the track bar from the axle bracket.

(9) Disconnect the tie rod from the steering knuckle. Disconnect the steering damper from the axle bracket.

(10) Support the axle with a hydraulic jack under the differential. Raise the axle just enough to relieve the axle weight from the springs.

(11) Remove the spring U-bolts from the plate brackets.

(12) Loosen BUT DO NOT REMOVE the bolts that attach the spring rear pivot at the frame rail brackets. This will allow the springs to pivot without binding on the bushings.

(13) Disconnect shackle from the springs and lower the springs to the surface.

(14) Lower the jack enough to remove the axle.

INSTALLATION

CAUTION: Suspension components with rubber bushings should be tightened with the vehicle at normal height. It is important to have the springs supporting the weight of the vehicle when the fasteners are torqued. If springs are not at their normal ride position, vehicle ride comfort could be affected and premature bushing wear may occur. Rubber bushings must never be lubricated.

(1) Support the axle on a hydraulic jack under the differential. Position the axle under the vehicle.

(2) Raise the springs and install the spring shackle bolts. **Do not tighten at this time.**

(3) Lower the axle and align the spring center bolts with the locating holes in the axle pads and plate brackets.

(4) Install the spring U-bolts through the plate brackets and tighten to 122 N·m (90 ft. lbs.) torque.

(5) Connect the track bar to the axle bracket and install the bolt. **Do not tighten at this time.**

It is important that the springs support the weight of the vehicle when the track bar is connected. If springs are not at their usual position, the vehicle ride comfort could be affected.

(6) Install the shock absorber and tighten the nut to 61 N·m (45 ft. lbs.) torque.

(7) Install the stabilizer bar link to the axle bracket. Tighten the nut to 61 N·m (45 ft. lbs.) torque.

(8) Install the tie rod to the steering knuckles and tighten the nuts to 47 N·m (35 ft. lbs.) torque. Install the steering damper to the axle bracket and tighten the bolt to 75 N·m (55 ft. lbs.) torque.

(9) Install the brake components and ABS brake sensor (if equipped). Refer to Group 5—Brakes.

(10) Connect the vent hose to the tube fitting and axle shift motor vacuum harness.

(11) Align the reference marks and connect the drive shaft to the axle yoke. Tighten the U-joint clamp bolts to 19 N·m (14 ft. lbs.) torque.

(12) Check differential lubricant and add if necessary.

(13) Install the wheel and tire assemblies.

(15) Remove the supports and lower the vehicle.

(16) Tighten the spring rear pivot bolt/nut to 142 N·m (105 ft. lbs.) torque. Tighten the spring shackle bolt/nut to 135 N·m (100 ft. lbs.) torque.

(17) Tighten the track bar nut at the axle bracket to 100 N·m (74 ft. lbs.) torque.

(18) Check the front wheel alignment.

PINION SEAL REPLACEMENT

REMOVAL

(1) Raise and support the vehicle.

(2) Remove wheel and tire assemblies.

(3) Mark the propeller shaft yoke and pinion yoke for installation alignment reference.

(4) Remove the propeller shaft from the yoke.

(5) Remove the pinion yoke nut and washer. Use Remover C-452 and Wrench C-3281 to remove the pinion yoke (Fig. 2).

(6) Mark the positions of the yoke and pinion gear for installation alignment reference.

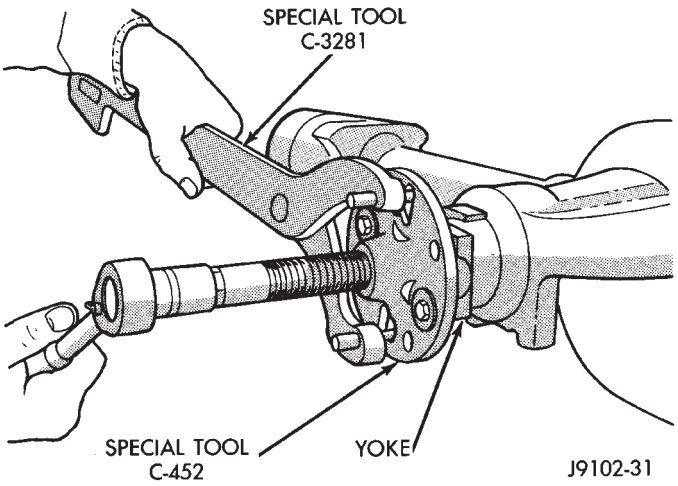

Fig. 2 Pinion Yoke Removal

(7) Use Remover 7794A and slide hammer to remove the pinion gear seal (Fig. 3).

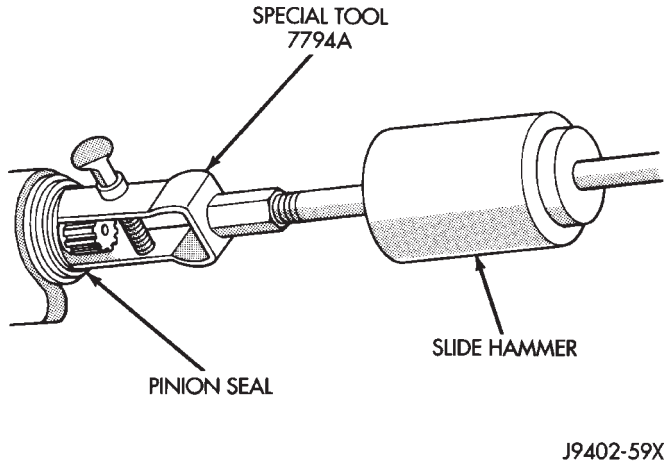

Fig. 3 Seal Removal

INSTALLATION

(1) Apply a light coating of gear lubricant on the lip of pinion seal. Install seal with Installer D-163 and Handle C-4171 (Fig. 4).

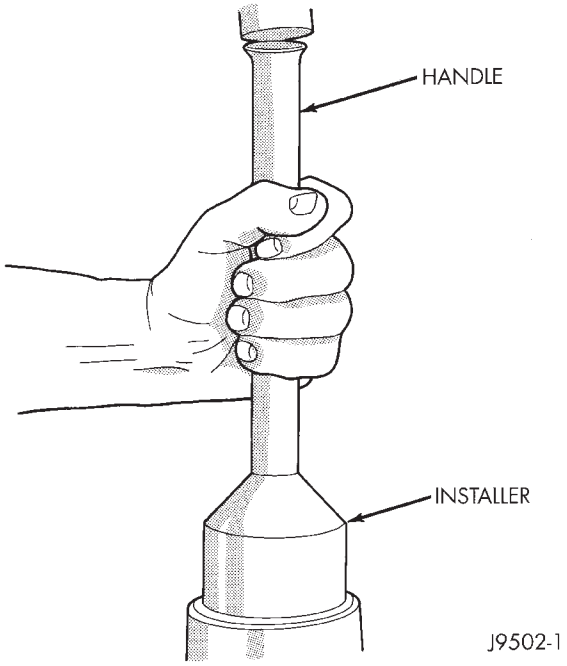

Fig. 4 Pinion Seal Installation

(2) Align the reference marks and install yoke on the pinion gear with Installer W-162-D.

(3) Install a new pinion nut on pinion shaft. **Tighten the nut to 217-352 N·m (160-260 ft. lbs.) (Fig. 5).**

(4) Align the installation reference marks and attach the propeller shaft to the yoke.

(5) Add API grade GL 5 hypoid gear lubricant to the differential housing, if necessary.

(6) Install wheel and tire assemblies.

(7) Remove support and lower the vehicle.

HUB BEARING AND AXLE SHAFT

REMOVAL

(1) Raise and support the vehicle.

(2) Remove the wheel and tire assembly.

(3) Remove the brake components from the axle, refer to Group 5, Brakes.

(4) Remove the cotter pin, nut retainer and axle hub nut (Fig. 6).

(5) Remove the hub to knuckle bolts (Fig. 6). Remove the hub from the steering knuckle and axle shaft.

(6) Remove the disc brake rotor shield from the bearing carrier (Fig. 6).

(7) On disconnect axles, remove vacuum shift motor housing. Refer to Vacuum Disconnect Axle in this section.

(8) Remove the axle shaft from the housing. **Avoid damaging the axle shaft oil seals in the differential.**

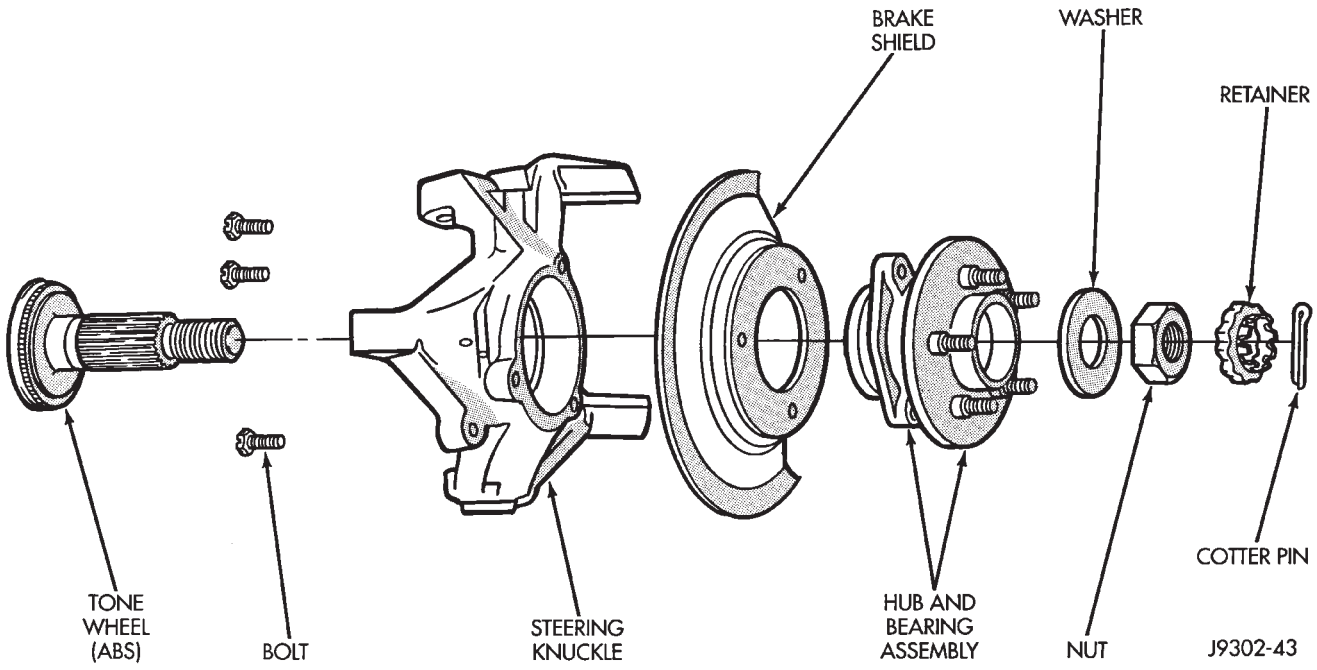

Fig. 6 Hub, Knuckle and Axle Shaft

INSTALLATION

(1) Thoroughly clean the axle shaft (Fig. 6) and apply a thin film of Mopar Wheel Bearing Grease to the shaft splines, seal contact surface, hub bore.

(2) Install the axle shaft into the housing and differential side gears. Avoid damaging the axle shaft oil seals in the differential.

(3) Install the hub bearing and brake dust shield to the knuckle.

(4) Install the hub to knuckle bolts and tighten to 102 N·m (75 ft. lbs.) torque.

(5) Install the hub washer and nut. Tighten the hub nut to 237 N·m (175 ft. lbs.) torque. Install the nut retainer and a new cotter pin (Fig. 6).

(6) Install the brake components, refer to Group 5, Brakes.

(7) Install the wheel and tire assembly.

(8) Remove support and lower the vehicle.

AXLE SHAFT—CARDAN U-JOINT

DISASSEMBLY

Single cardan U-joints are not serviceable. If defective, they must be replaced as a unit. If the bearings, seals, spider or bearing caps are damaged or worn, replace the complete U-joint.

CAUTION: Clamp only the forged portion of the yoke in the vise. Also, to avoid distorting the yoke, do not over tighten the vise jaws.

(1) Remove the bearing cap retaining snap rings (Fig. 7).

It can be helpful to saturate the bearing caps with penetrating oil prior to removal.

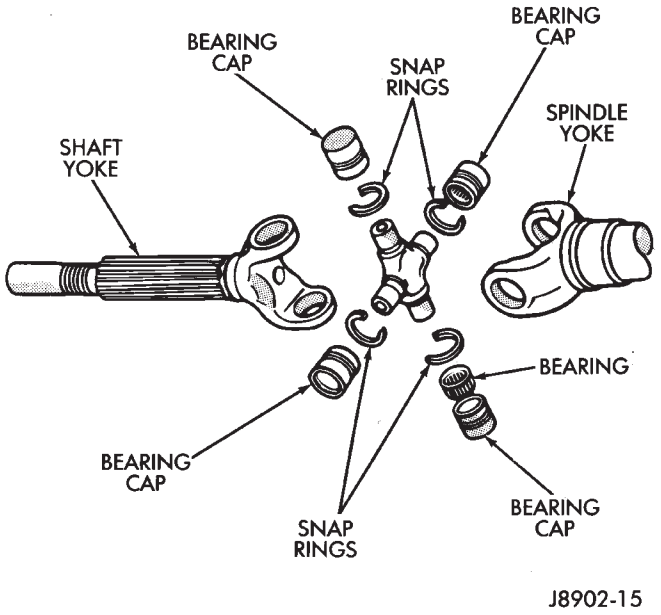

Fig. 7 Axle Shaft Outer U-Joint

(2) Locate a socket that is larger in diameter than the bearing cap. Place the socket (receiver) against the yoke and around the perimeter of the bearing cap to be removed. Locate a socket that is smaller in diameter than the bearing cap. Place the socket (driver) against the opposite bearing cap. Position the yoke with the sockets in a vise (Fig. 8).

(3) Compress the vise jaws to force the bearing cap into the larger socket (receiver).

(4) Release the vise jaws. Remove the sockets and bearing cap that was partially forced out of the yoke.

(5) Repeat the above procedure for the remaining bearing cap.

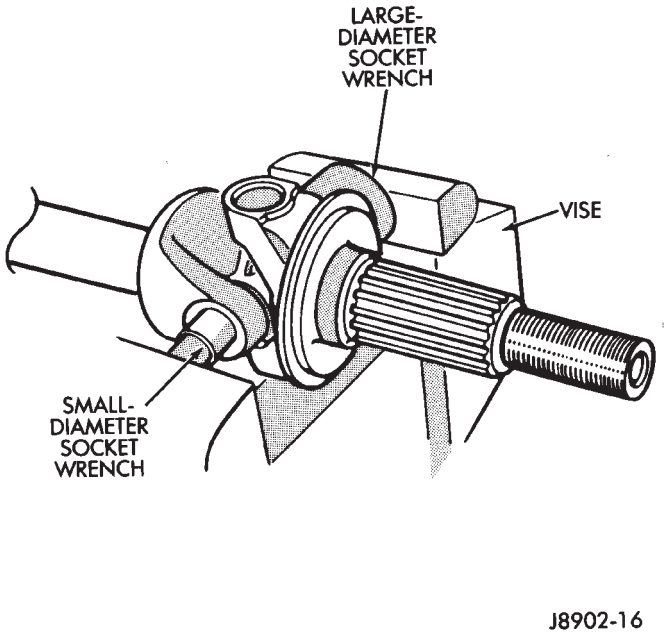

Fig. 8 Yoke Bearing Cap Removal

(6) Remove the remaining bearing cap, bearings, seals and spider from the propeller shaft yoke.

CLEANING AND INSPECTION

(1) Clean all the U-joint yoke bores with cleaning solvent and a wire brush. Ensure that all the rust and foreign matter are removed from the bores.

(2) Inspect the yokes for distortion, cracks and worn bearing cap bores.

(3) Replace the complete U-joint if any of the components are defective.

ASSEMBLY

(1) Pack the bearing caps 1/3 full of wheel bearing lubricant. Apply extreme pressure (EP), lithium-base lubricant to aid in installation.

(2) Position the spider in the yoke. Insert the seals and bearings. Tap the bearing caps into the yoke bores far enough to hold the spider in position.

(3) Place the socket (driver) against one bearing cap. Position the yoke with the socket wrench in a vise.

(4) Compress the vise to force the bearing caps into the yoke. Force the caps enough to install the retaining clips.

(5) Install the bearing cap retaining clips.

(6) Install the axle shaft, refer to Hub Bearing and Axle Shaft installation.

VACUUM DISCONNECT AXLE—YJ VEHICLES

VACUUM CONTROL SYSTEM

The disconnect axle control system consists of;

- Vacuum control switch on the transfer case
- Air vent filter
- Shift motor
- Indicator switch
- Vacuum switch
- Check valve
- Vacuum harness (Fig. 9, 10)

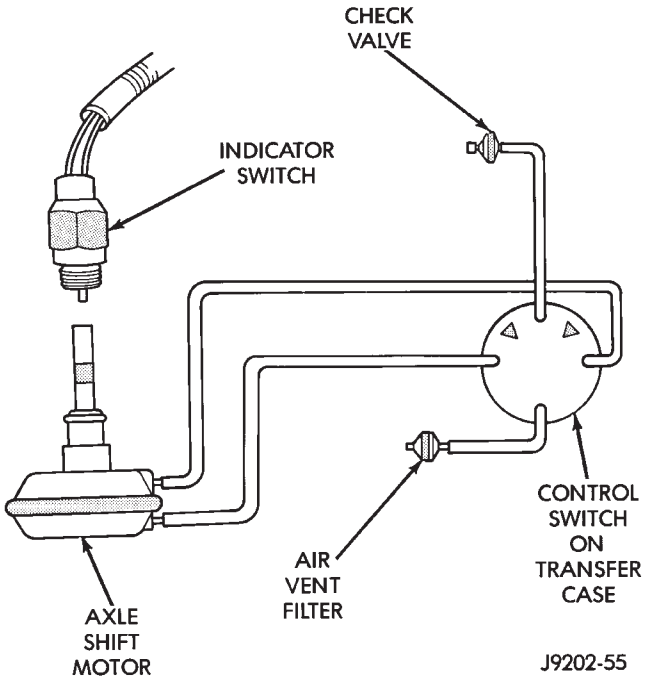

Fig. 9 Vacuum Control System

Refer to Group 21—Transmissions for additional information involving the Command-Trac System Transfer Case.

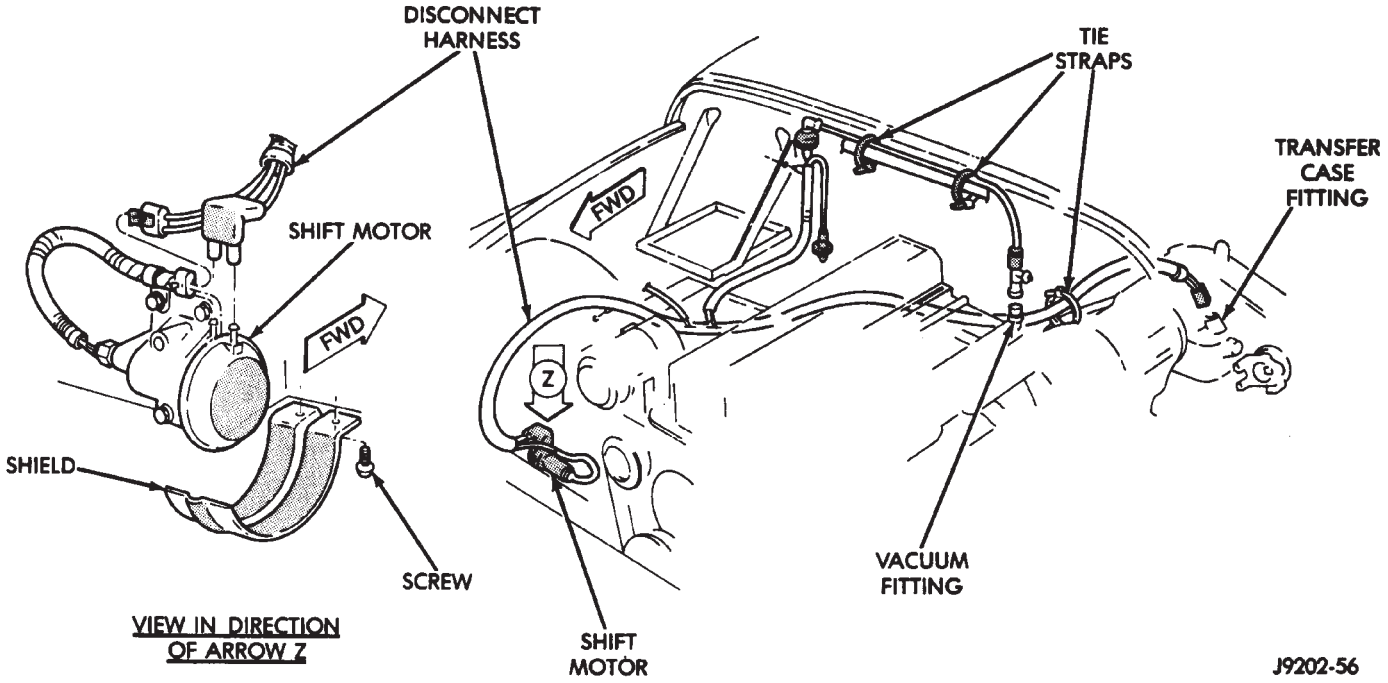

Fig. 10 Vacuum Hose Routing

DISCONNECT AXLE/SHIFT MOTOR DIAGNOSIS

TWO-WHEEL DRIVE OPERATION DIAGNOSIS

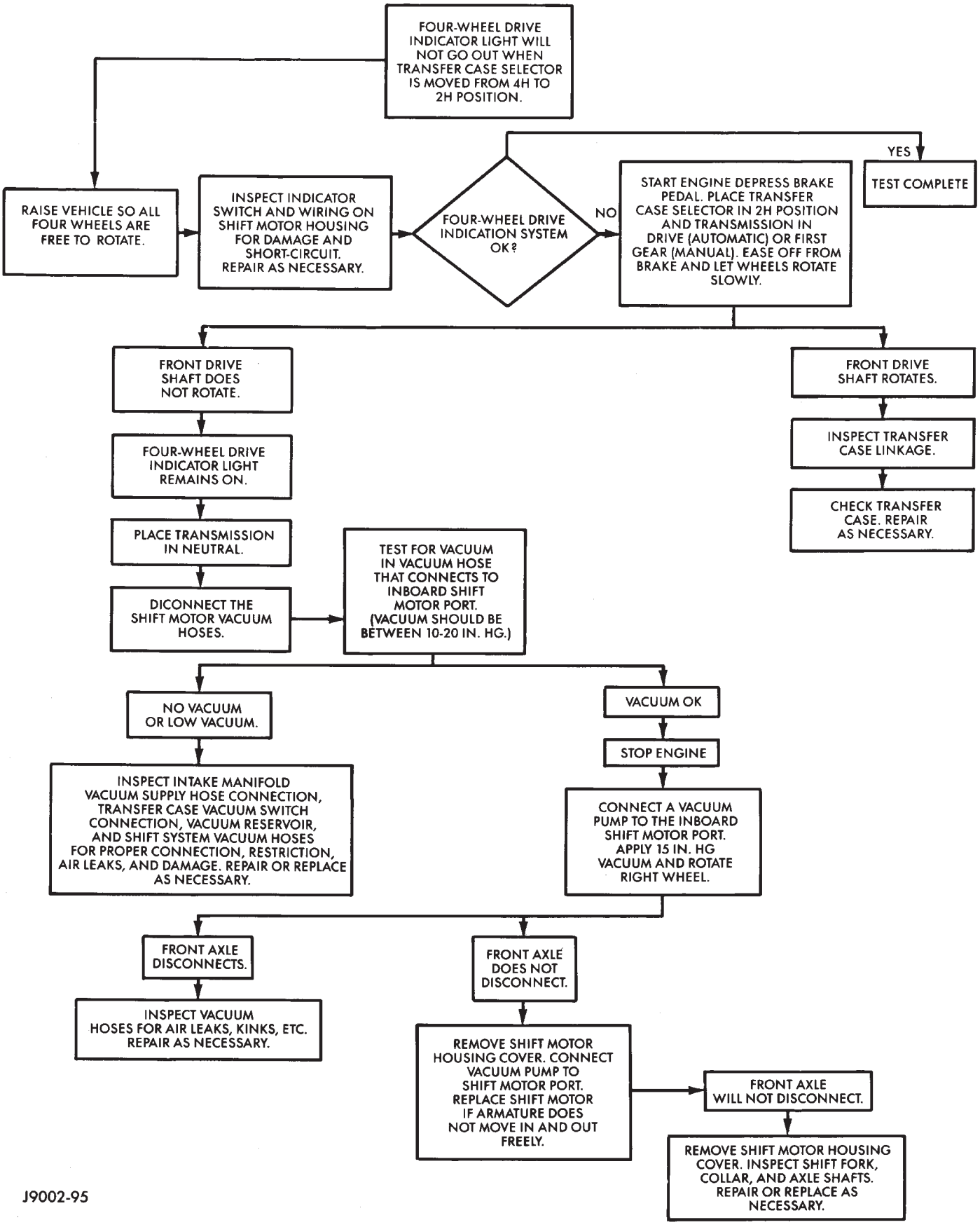

J9002-95

DISCONNECT AXLE/SHIFT MOTOR DIAGNOSIS (CONT'D)

FOUR-WHEEL DRIVE OPERATION DIAGNOSIS

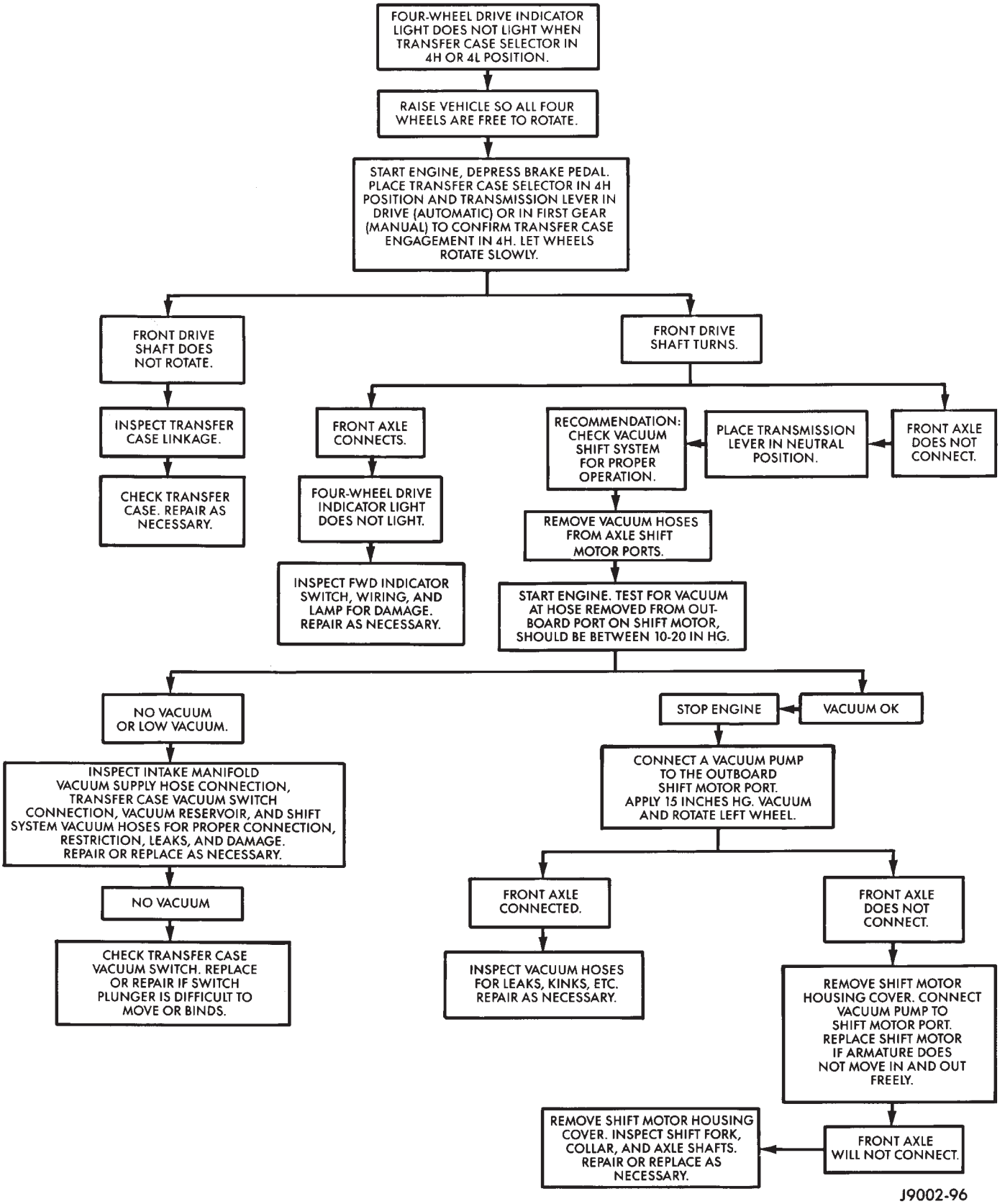

SHIFT MOTOR—REMOVAL/DISASSEMBLY

(1) Disconnect the vacuum and wiring connector from the shift housing.

(2) Remove indicator switch.

(3) Remove the shift motor housing cover, gasket and shield from the housing (Fig. 11).

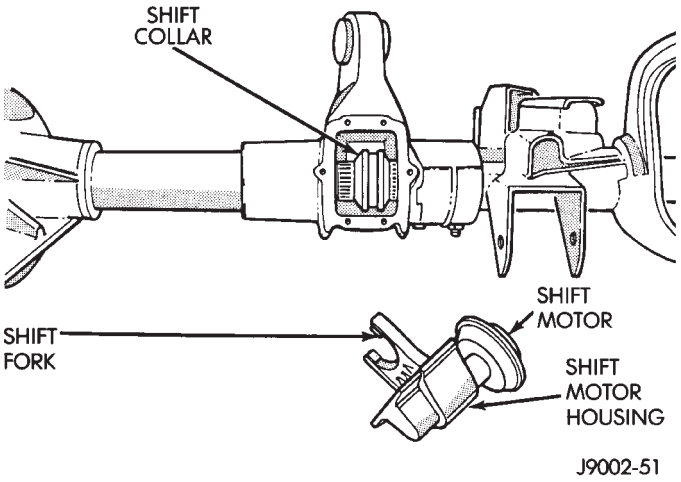

Fig. 11 Shift Motor Housing and Shift Collar

(4) Remove the E-clips from the shift motor housing and shaft. Remove shift motor and shift fork from the housing (Fig. 12).

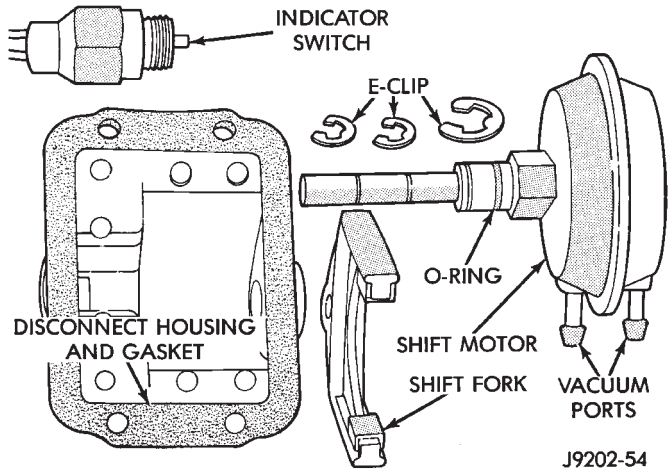

Fig. 12 Vacuum Shift Motor Components

(5) Remove the O-ring seal from the shift motor shaft.

(6) Clean and inspect all components. If any component is excessively worn or damaged, it should be replaced.

ASSEMBLY/INSTALLATION

(1) Install a new O-ring seal on the shift motor shaft.

(2) Insert the shift motor shaft through the hole in the housing and shift fork. The shift fork offset should be toward the differential.

(3) Install the E-clips on the shift motor shaft and housing.

(4) Install the shift motor housing gasket and cover. **Ensure the shift fork is correctly guided into the shift collar groove.**

(5) Install the shift motor housing shield and attaching bolts. Tighten the bolts to 11 N·m (101 in. lbs.) torque.

(6) Add 148 ml (5 ounces) of API grade GL 5 hypoid gear lubricant to the shift motor housing. Add lubricant through indicator switch mounting hole.

(7) Install indicator switch, electrical connector and vacuum harness.

INTERMEDIATE AXLE SHAFT—REMOVAL/DISASSEMBLY

Service to the Disconnect axle seals and bearing require the use of Tool Set 6288 (J34659) and Seal Installer 6228.

(1) Remove the vacuum motor housing. Refer to Shift Motor Removal in this section.

(3) Remove the outer axle shaft. Refer to Hub Bearing and Axle Shaft in this section.

(4) Remove shift collar and intermediate axle shaft.

(5) Remove the inner axle shaft seal from the shift motor housing (Fig. 13).

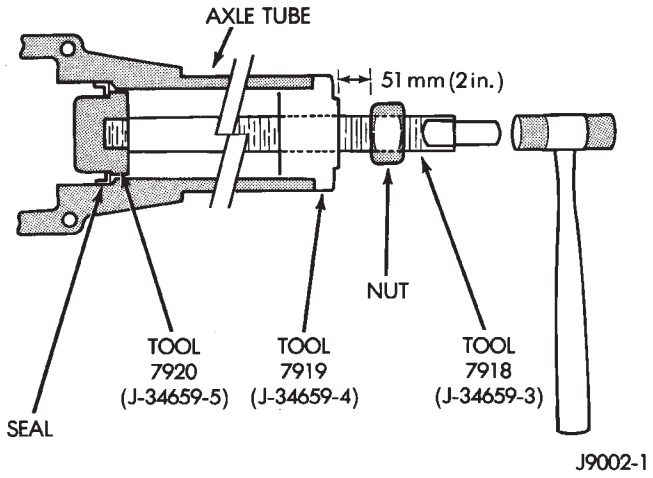

Fig. 13 Axle Shaft Inner Seal Removal

(6) Remove the intermediate axle shaft bearing (Fig. 14).

ASSEMBLY/INSTALLATION

(1) Position the bearing on installation tool. Seat the bearing in the housing bore (Fig. 15).

(2) Clean the inside perimeter of the axle shaft tube with fine crocus cloth.

(3) Apply a light film of oil to the inside lip of the new axle shaft seal.

(4) Install the inner axle seal (Fig. 16, 17).

The axle shaft seal primary installation tool 6228-1 will only force the seal partially into the

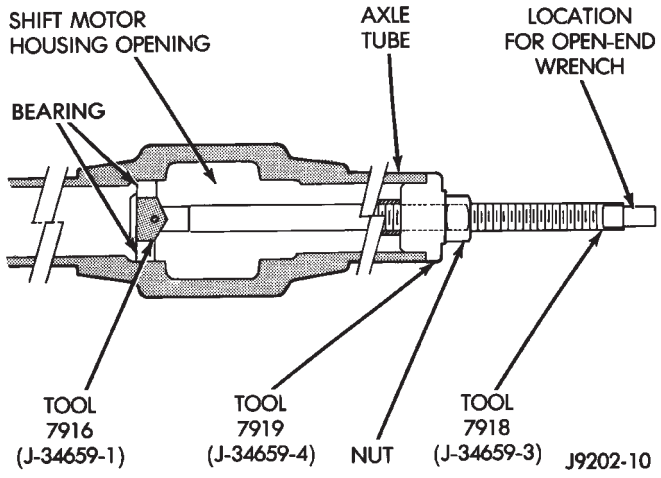

Fig. 14 Bearing Removal Tool Installed

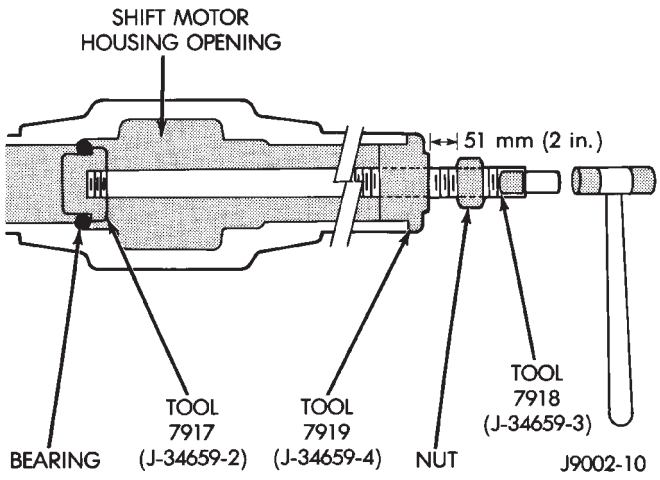

Fig. 15 Intermediate Shaft Bearing Installation

axle shaft tube bore. The axle shaft seal secondary installation tool 6228-3 must be used to completely seat the seal in the axle shaft tube bore. After seal installation, inspect that the seal is NOT distorted or cocked in the tube.

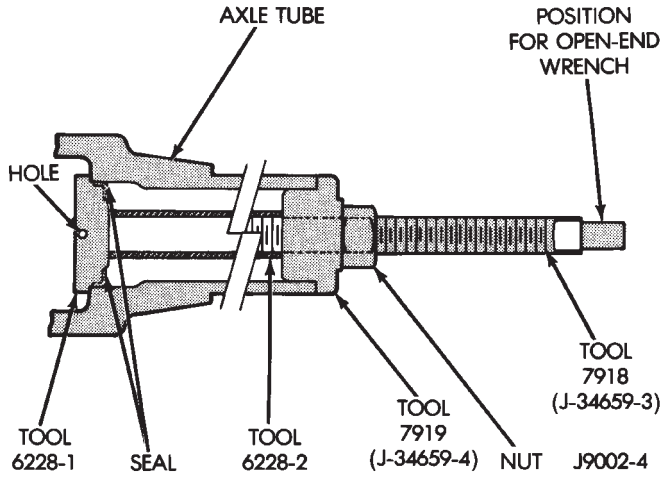

Fig. 16 Primary Installation of Seal (Step One)

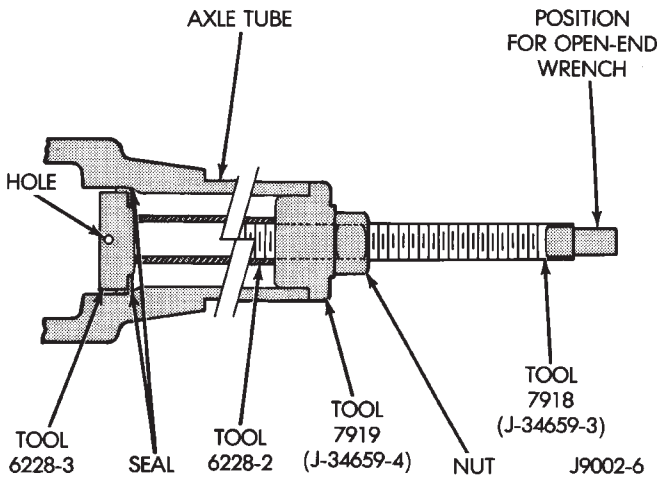

Fig. 17 Secondary Installation of Seal (Step Two)

(5) Insert the intermediate axle shaft into the differential side gear.

(6) Install the shift collar on the splined end of the intermediate axle shaft.

(7) Lubricate the splined end of the intermediate axle shaft with multi-purpose lubricant (Fig. 18).

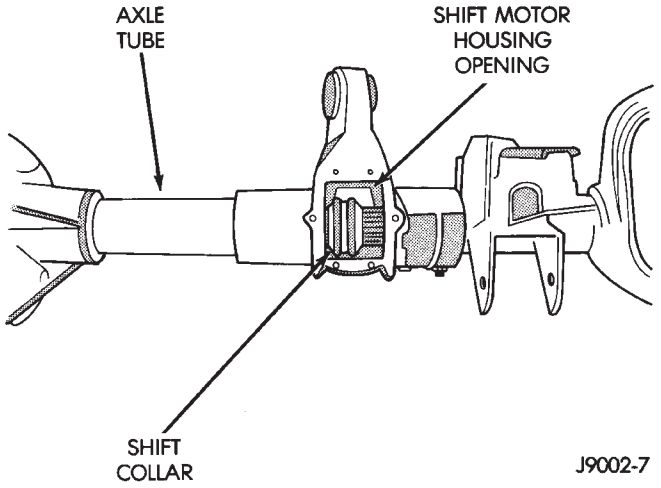

Fig. 18 Shift Collar Installation

CAUTION: Apply all-purpose lubricant to the axle shaft splines to prevent damage to the seal during axle shaft installation.

(8) Insert the axle shaft into the tube. Engage the splined-end of the shaft with the shift collar. Refer to Hub Bearing and Axle Shaft in this section.

(9) Install the vacuum motor housing. Refer to Shift Motor Installation in this section.

STEERING KNUCKLE AND BALL STUDS

Ball Stud service procedures below require removal of the hub bearing and axle shaft. Removal and installation of upper and lower ball stud requires use of Tool Kit 6289 (J34503-A).

The lower ball stud has two different designs. For this reason installer 6752 will also be needed. Check installers for proper fit.

KNUCKLE REMOVAL

(1) Remove hub bearing and axle shaft refer to the Removal procedure.

(2) Disconnect the tie-rod or drag link end from the steering knuckle arm. Remove the ABS sensor wire and bracket from knuckle.

(3) Remove the cotter pins from the upper and lower ball studs. Remove the upper and lower ball stud nuts.

(4) Strike the steering knuckle with a brass hammer to loosen. Remove knuckle from axle tube yokes (Fig. 19).

UPPER BALL STUD REPLACEMENT

(1) Position tools as shown to remove and install ball stud (Fig. 20).

LOWER BALL STUD REPLACEMENT

(1) Position tools as shown to remove and install ball stud (Fig.21). Because there are two different designs for the lower ball studs try both installers for proper fit.

KNUCKLE INSTALLATION

(1) Position the steering knuckle on the ball studs.

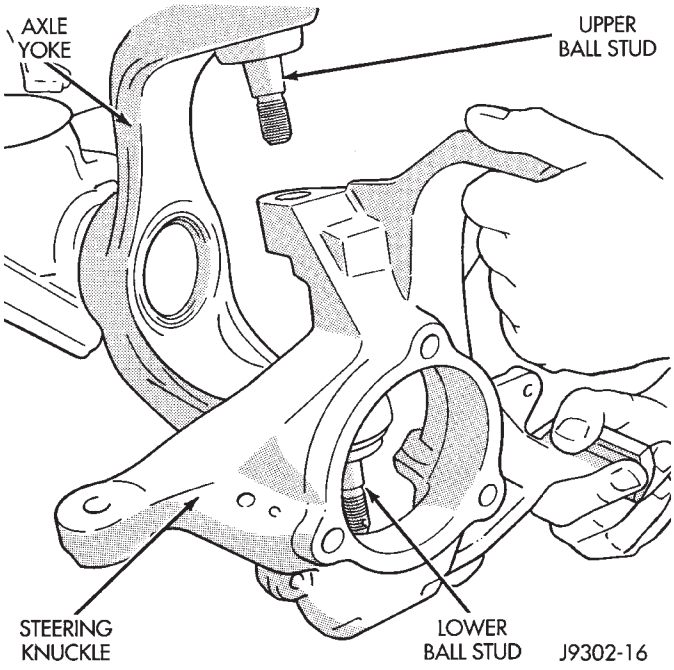

Fig. 19 Steering Knuckle Removal/Installation

(2) Install and tighten the bottom retaining nut to 109 N·m (80 ft. lbs.) torque. Install new cotter pin.

(3) Install and tighten the top retaining nut to 101 N·m (75 ft. lbs.) torque. Install new cotter pin.

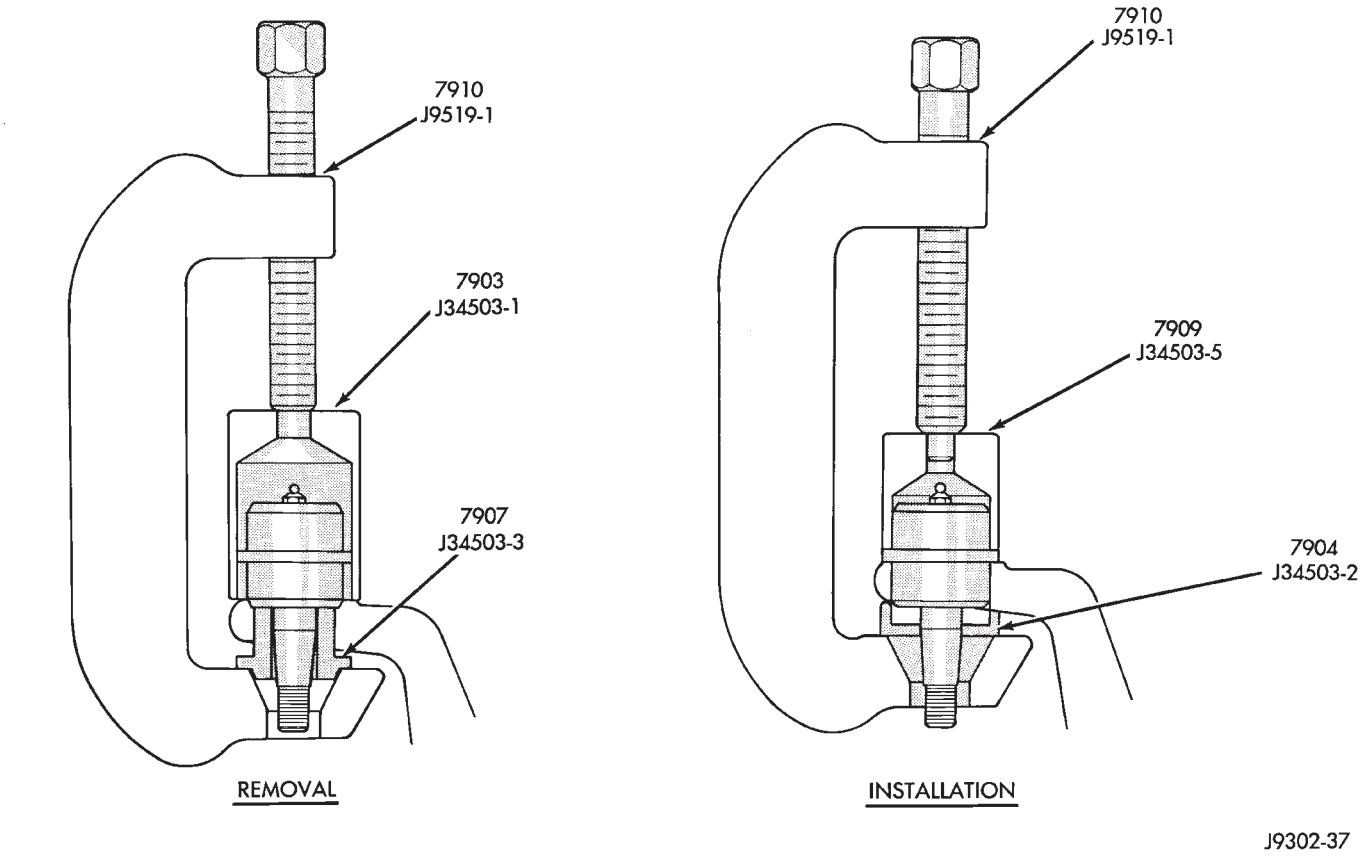

Fig. 20 Upper Ball Stud Remove/Install

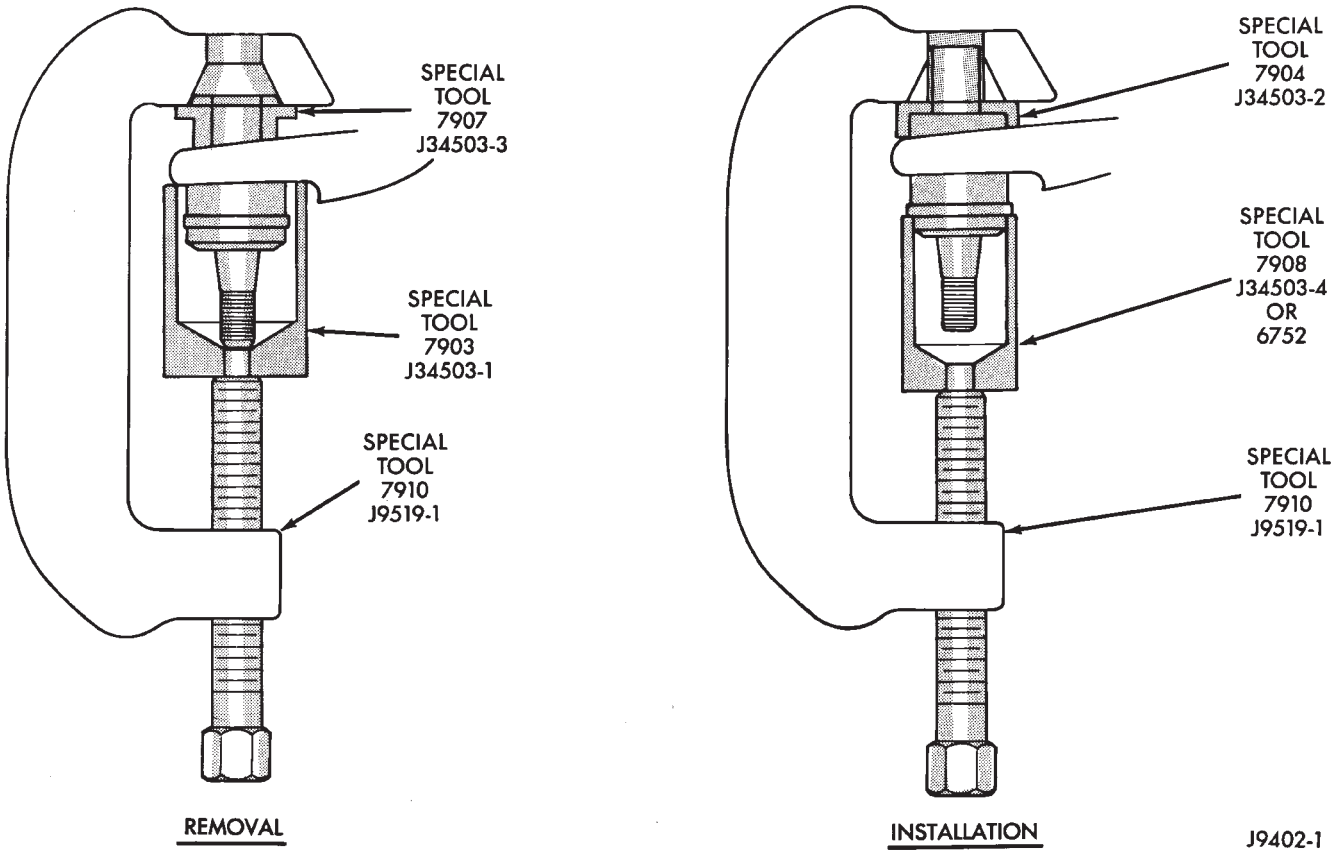

Fig. 21 Lower Ball Stud Remove/Install

(4) Install the Hub Bearing and Axle Shaft according to the installation procedure.

(5) Reconnect the tie-rod or drag link end onto the steering knuckle arm. Install the ABS sensor wire and bracket to the knuckle, refer to Group 5 Brakes.

AXLE BUSHING REPLACEMENT

Refer to Axle Bushing Replacement in the Front Suspension section.

DIFFERENTIAL REMOVAL

To service the differential the axle assembly and axle shafts must be removed. Refer to the removal procedures in this Group.

(1) Note the installation reference letters stamped on the bearing caps and housing machined sealing surface (Fig. 22).

(2) Remove the differential bearing caps.

(3) Position Spreader W-129-B with the tool dowel pins seated in the locating holes (Fig. 23). Install the holddown clamps and tighten the tool turnbuckle finger-tight.

(4) Install a pilot stud at the left side of the differential housing. Attach Dial Indicator to housing pilot stud. Load the indicator plunger against the opposite side of the housing (Fig. 23) and zero the indicator.

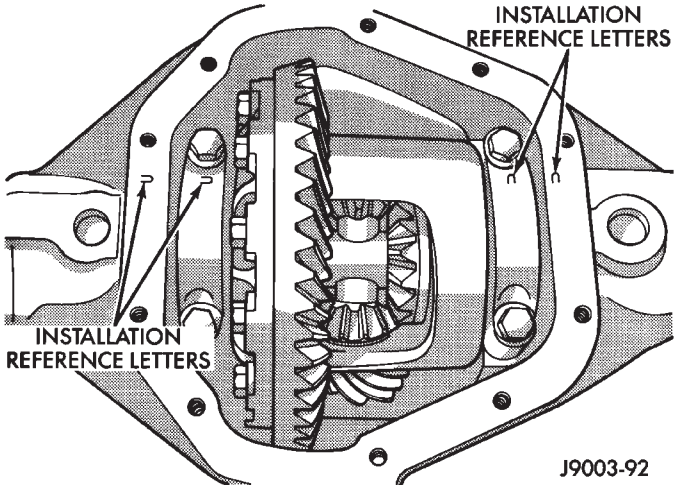

Fig. 22 Bearing Cap Identification

CAUTION:Do not spread over 0.38 mm (0.015 in). If the housing is over-separated, it could be distorted or damaged.

(5) Separate the housing enough to remove the case from the housing. Measure the distance with the dial indicator (Fig. 23).

(6) Remove the dial indicator.

(7) Pry the differential case loose from the housing. To prevent damage, pivot on housing with the end of the pry bar against spreader (Fig. 24).

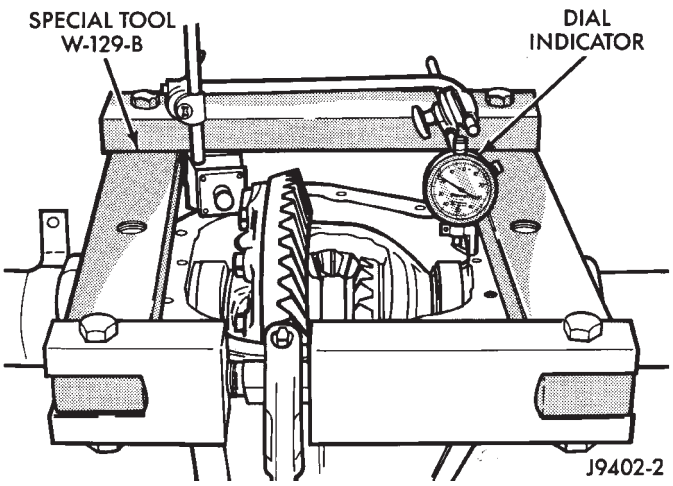

Fig. 23 Spread Differential Housing

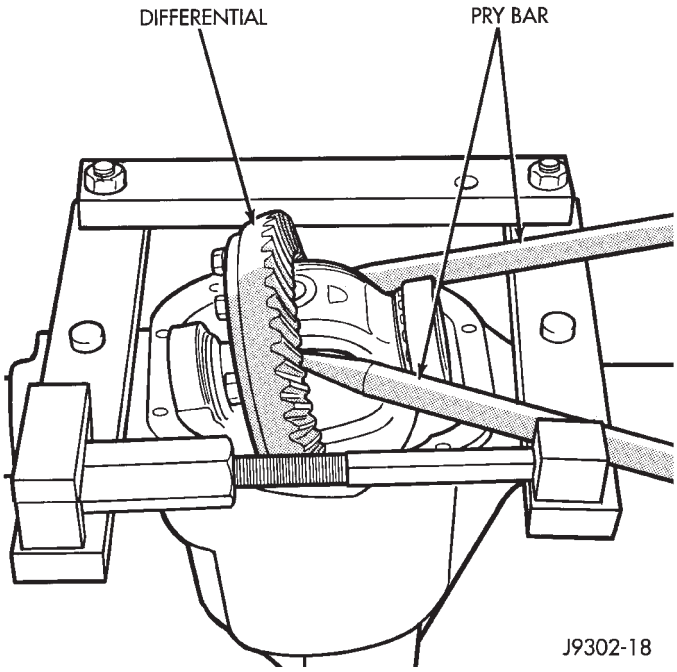

Fig. 24 Differential Removal

(8) Remove the case from housing. Mark or tag bearing cups indicating which side they were removed. Remove spreader from housing.

INNER AXLE SHAFT OIL SEAL REPLACEMENT

SELECT-TRAC

(1) Remove the inner axle shaft seals with a pry bay.

(2) Install oil seals with Discs 6764 and Turnbuckle D-112-A (Fig. 25). Tighten tool until disc bottoms in housing.

COMMAND-TRAC—LEFT-SIDE

(1) Remove the inner axle shaft seal with a pry bay.

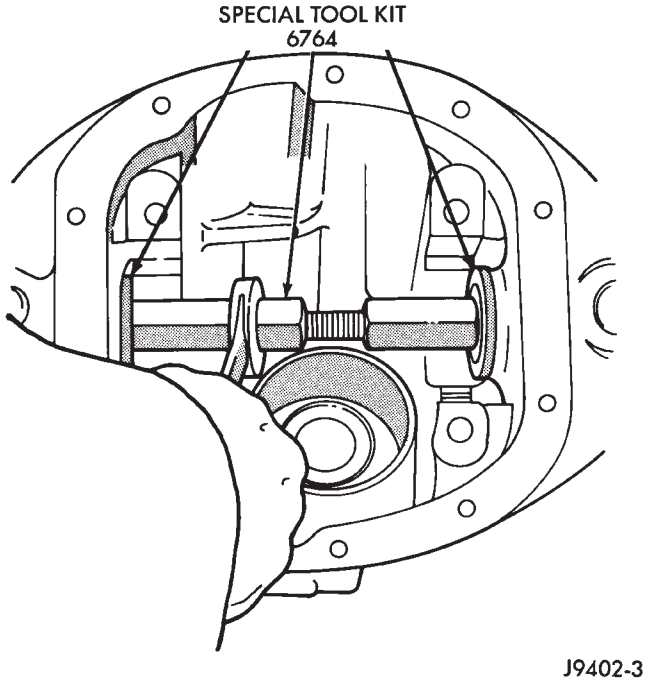

Fig. 25 Axle Seal Installation

(2) Install the inner axle seal on Tool 6228-1 (Fig. 26).

(3) Thread the **reverse** side of Installer 6228-1 tightly onto the threaded rod tool (Fig. 26).

(4) Press the seal into position.

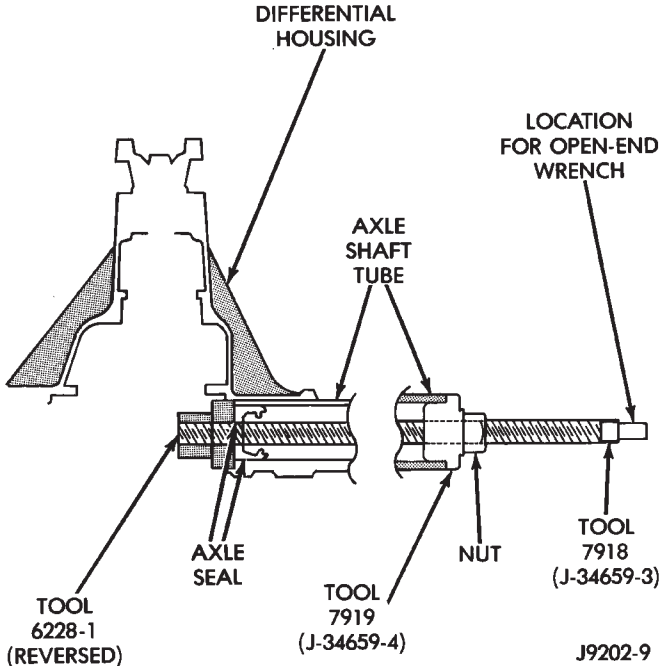

Fig. 26 Left Side Seal Installation

DIFFERENTIAL DISASSEMBLY

(1) Remove the bearings from the differential case with Press C-293-PA, Plug C-293-3, Adapter C-293-39 (Fig. 27).

Place adapter rings so they do not damage the bearing cage.

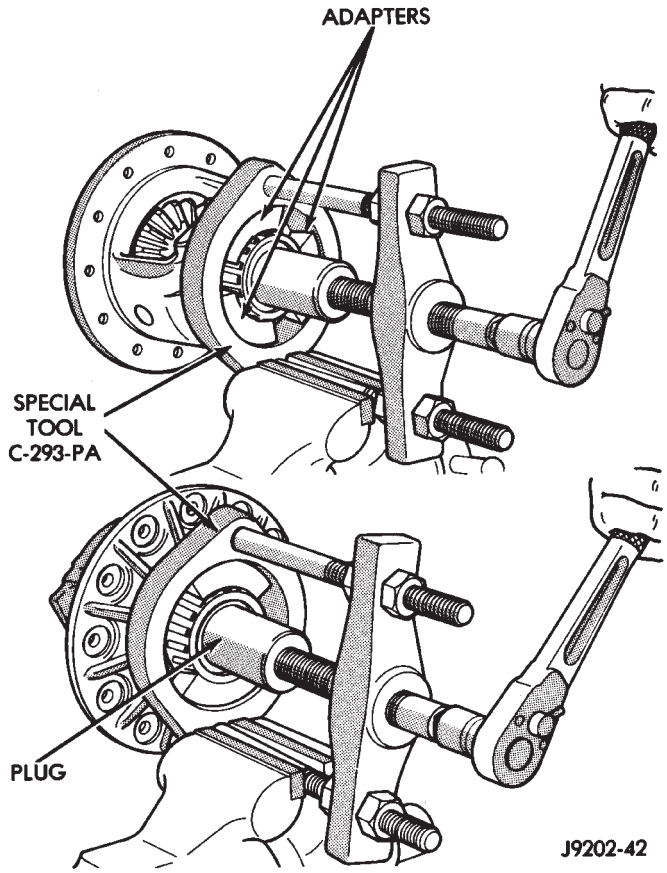

Fig. 27 Differential Bearing Removal

(2) Remove bearing shims from case hubs and mark them (with hub identity) for assembly reference. Record the thickness of the shims.

(3) Clamp the differential case in a vise equipped with soft jaws. Remove and **discard** the ring gear bolts. Tap the ring gear with a rawhide or plastic mallet and remove (Fig. 28).

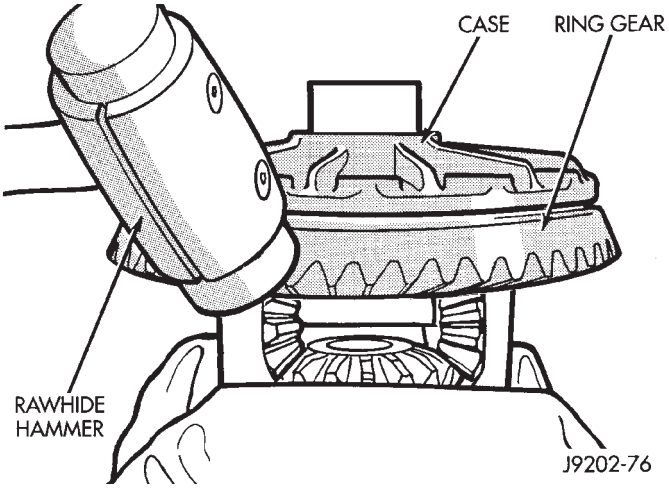

Fig. 28 Ring Gear Removal

(4) Use a drift to remove the pinion gear mate shaft lock pin (Fig. 29).

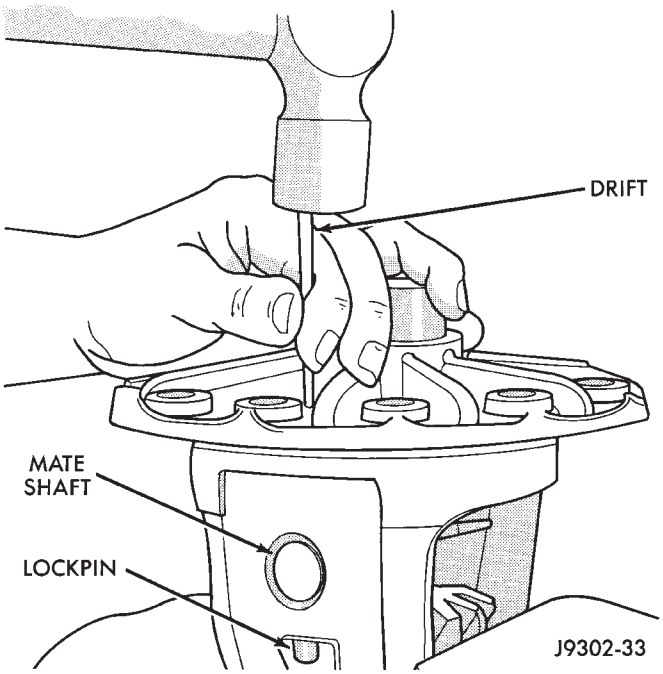

Fig. 29 Mate Shaft Lock Pin Removal

(5) Remove the mate shaft with a drift and hammer (Fig. 30).

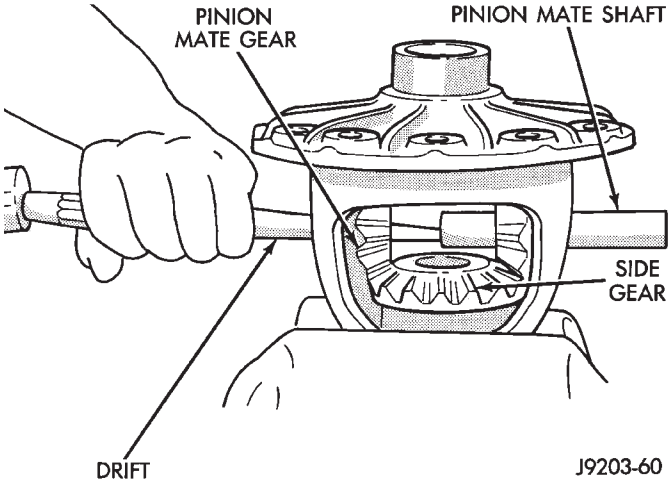

Fig. 30 Mate Shaft Removal

(6) Rotate the differential side gears and remove the pinion mate gears and thrust washers (Fig. 31).

(7) Remove the differential side gears and thrust washers.

(8) Remove the case from the vise.

PINION REMOVAL/DISASSEMBLY

(1) Remove the pinion yoke nut and washer. Use Remover C-452 and Wrench C-3281 to remove the pinion yoke (Fig. 32).

(2) Remove the pinion gear seal with a slide hammer or pry out with bar.

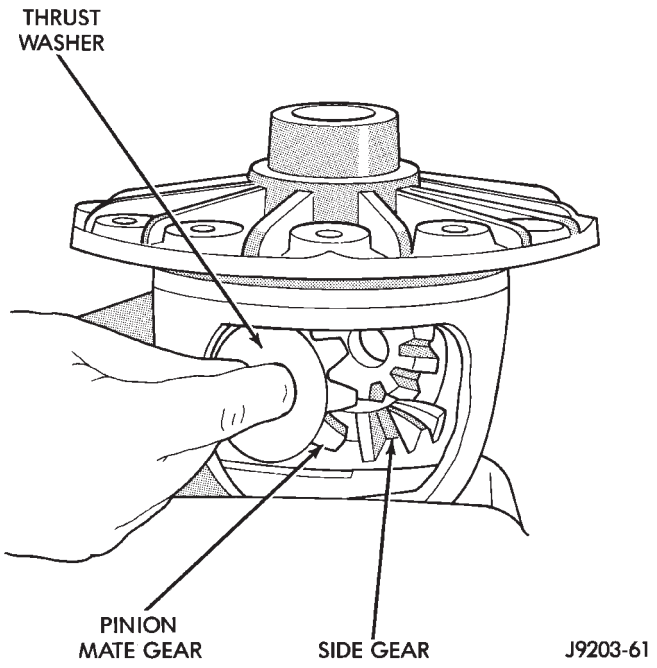

Fig. 31 Pinion Mate Gear Removal

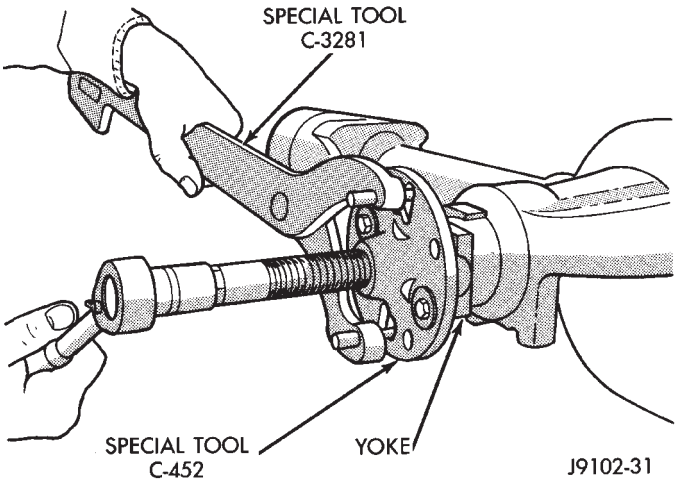

Fig. 32 Pinion Yoke Removal

(3) Drive out pinion gear from housing with rawhide or plastic hammer (Fig. 33). Catch the pinion with your hand to prevent it from falling and being damaged. **This will damage the front bearing rollers and bearing cup. The front bearing and cup must be replaced.** Remove preload shims and record the thickness.

(4) Remove front bearing from housing.

(5) Remove the front pinion bearing cup and seal with Remover D-147 and Handle C-4171 (Fig. 34).

(6) Remove the rear bearing cup from housing (Fig. 35). Use Remover D-149 and Handle C-4171.

(7) Remove the inner bearing from the pinion with Puller C-293-PA and Adapter C-293-39 (Fig. 36).

Place adapter rings so they do not damage the bearing cage.

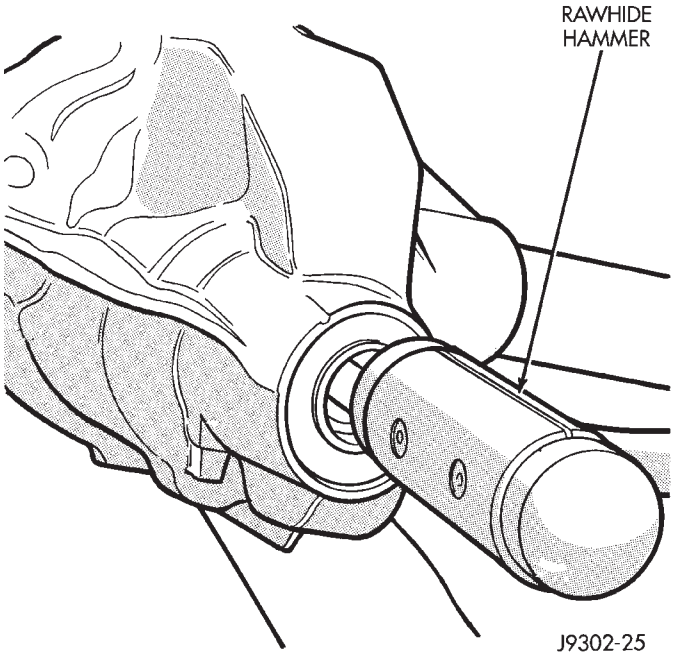

Fig. 33 Remove Pinion Gear

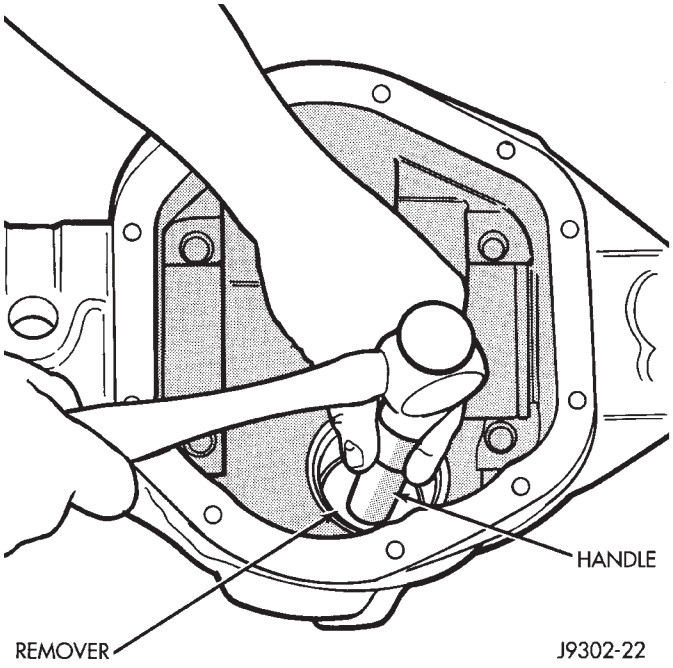

Fig. 34 Front Bearing Cup Removal

(8) Remove the oil slinger from the pinion gear shaft. **Save the slinger it is used as select shim for pinion depth.**

CLEANING/INSPECTION

Wash differential components with cleaning solvent and dry with compressed air. **Do not steam clean the differential components.**

Wash bearings with solvent and towel dry, or dry with compressed air. DO NOT spin bearings with

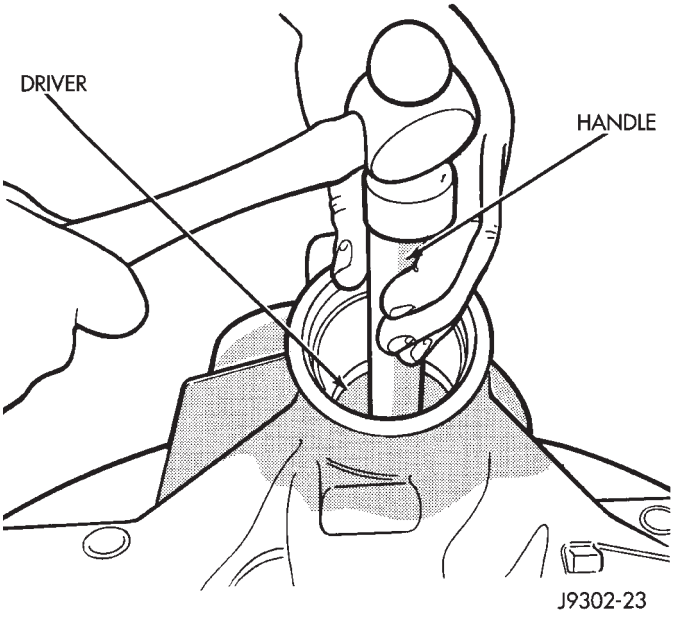

Fig. 35 Rear Bearing Cup Removal

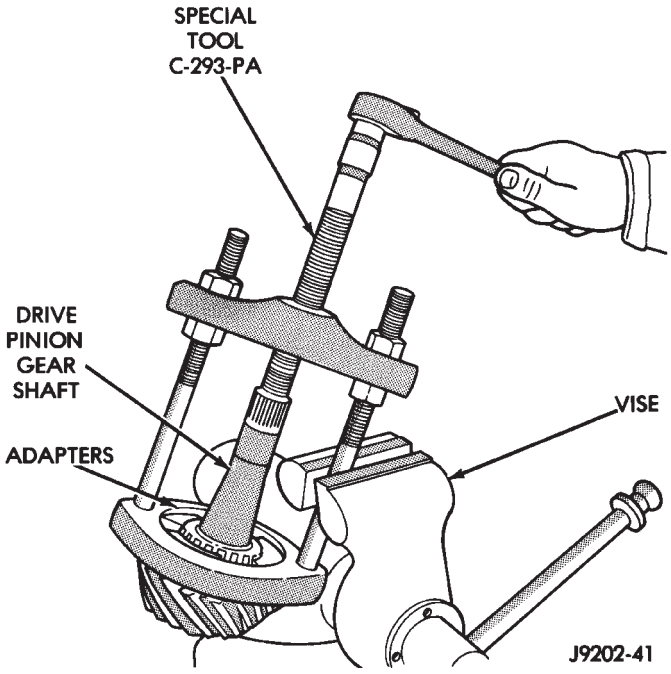

Fig. 36 Inner Bearing Removal

compressed air. **Cup and bearing must be replaced as a matched sets only.**

Clean axle shaft tubes and oil channels with clean cloth.

Inspect for;

- Smooth appearance with no broken/dented surfaces on the bearing rollers or the roller contact surfaces.
- Bearing cups must not be distorted or cracked.
- Machined surfaces should be smooth and without any raised edges.
- Raised metal on shoulders of cup bores should be removed with a hand stone.
- Wear or damage to pinion gear mate shaft, pinion gears, side gears and thrust washers. Replace as a matched set only.
- Worn or chipped teeth to ring and pinion gears.
- Damaged bolt threads to ring gear. Replaced as a matched set only.
- Pinion yoke for cracks, worn splines, pitted areas, and a rough/corroded seal contact surface. Repair or replace the as necessary.

DIFFERENTIAL ASSEMBLY

ASSEMBLY

(1) Install the following components in the differential case (Fig. 37).

- Differential side gears and thrust washers
- Pinion gears and thrust washers
- Pinion gear mate shaft (align holes in shaft and case)

(2) Install and seat the locking roll pin in the differential case and mate shaft with a punch and hammer (Fig. 37). Peen metal part of case over pin in two places 180 degrees apart.

If replacement gears and thrust washers were installed, it is not necessary to measure the gear backlash. Correct fit is due to close machining tolerances during manufacture.

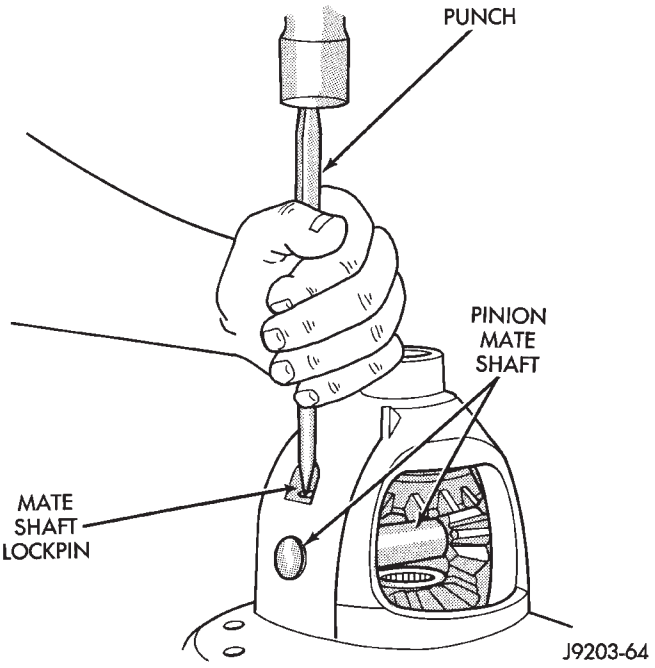

Fig. 37 Mate Shaft Pin Installation

(3) Invert the differential case and start two ring gear bolts. This will provide case-to-ring gear bolt hole alignment.

(4) Install new ring gear bolts and alternately tighten to 95-122 N·m (70-90 ft. lbs.) torque (Fig. 38).

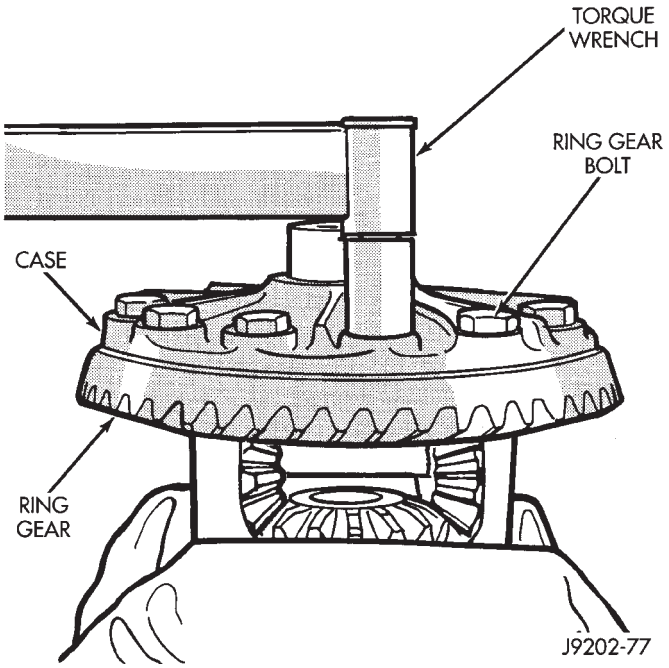

Fig. 38 Ring Gear Bolt Installation

(5) Lubricate all differential components with hypoid gear lubricant.

PINION GEAR DEPTH INFORMATION

Ring and pinion gears are supplied as matched sets only. The identifying numbers for the ring and pinion gear are etched into the face of each gear (Fig. 39). A plus (+) number, minus (-) number or zero (0) is etched into the face of the pinion gear. This number is the amount (in thousandths of an inch) the depth varies from the standard depth setting of a pinion etched with a (0). The standard setting from the centerline of the ring gear to the back face of the pinion is 92.1 mm (3.625 inches) for Model 30 axles (Fig. 40). The standard depth provides the best teeth contact pattern.

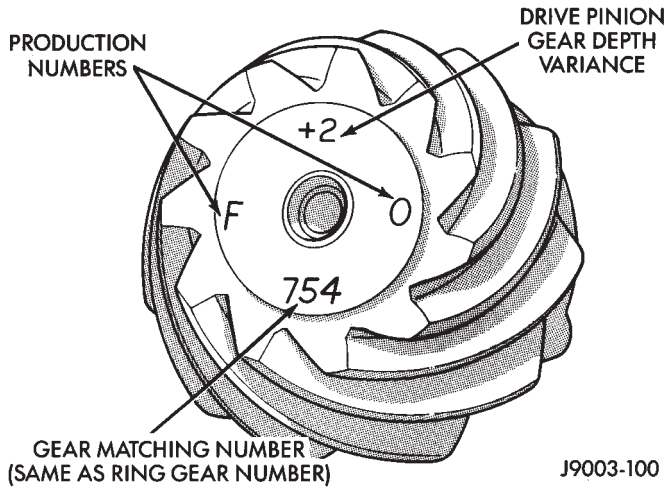

Fig. 39 Pinion Gear ID Numbers

THE BUTTON END ON THE PINION GEAR HEAD IS NO LONGER A MACHINED-TO-SPECIFICATIONS SURFACE. DO NOT USE THIS SURFACE FOR PINION DEPTH SET-UP OR CHECKING (Fig. 40).

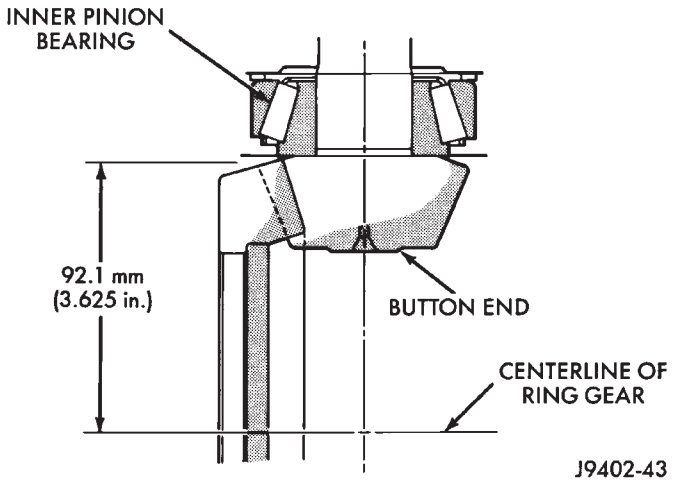

Fig. 40 Pinion Gear Head

Compensation for depth variance is achieved by a selected thickness oil slinger (production) or shims (service). The slinger is placed between the inner pinion bearing cone and gear head (Fig. 41). The shim pack is placed under the inner (rear) bearing cup for service. To change the pinion adjustment, shims are available in thicknesses of 0.003, 0.005, and 0.010 inch. **The oil slinger or baffle must be measured and the thickness included with the total shim pack.**

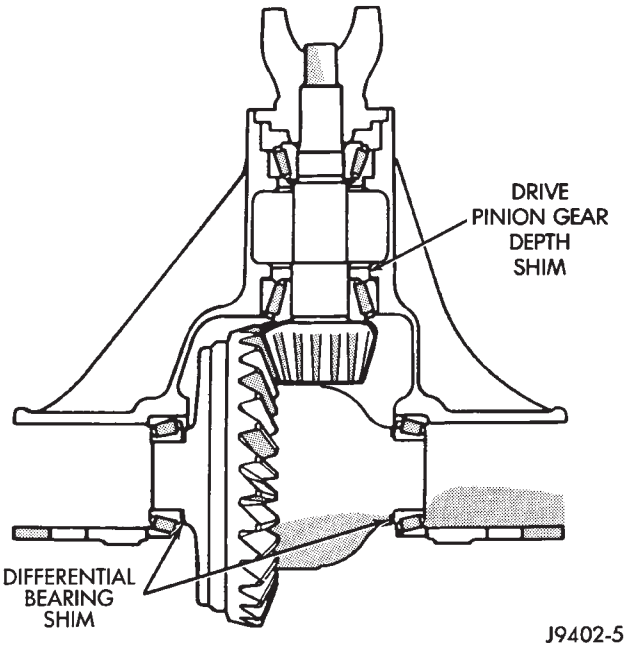

Fig. 41 Shim Locations

PINION GEAR DEPTH VARIANCE

Original Pinion Gear Depth Variance	Replacement Pinion Gear Depth Variance								
	−4	−3	−2	−1	0	+1	+2	+3	+4
+4	+0.008	+0.007	+0.006	+0.005	+0.004	+0.003	+0.002	+0.001	0
+3	+0.007	+0.006	+0.005	+0.004	+0.003	+0.002	+0.001	0	−0.001
+2	+0.006	+0.005	+0.004	+0.003	+0.002	+0.001	0	−0.001	−0.002
+1	+0.005	+0.004	+0.003	+0.002	+0.001	0	−0.001	−0.002	−0.003
0	+0.004	+0.003	+0.002	+0.001	0	−0.001	−0.002	−0.003	−0.004
−1	+0.003	+0.002	+0.001	0	−0.001	−0.002	−0.003	−0.004	−0.005
−2	+0.002	+0.001	0	−0.001	−0.002	−0.003	−0.004	−0.005	−0.006
−3	+0.001	0	−0.001	−0.002	−0.003	−0.004	−0.005	−0.006	−0.007
−4	0	−0.001	−0.002	−0.003	−0.004	−0.005	−0.006	−0.007	−0.008

J8902-46

New gear set: note the depth variance etched into both the original and the replacement pinion gear. Add or subtract the thickness of the original depth shims to compensate for the difference in the depth variances. Refer to the Depth Variance charts.

Note where Old and New Pinion Marking columns intersect. Intersecting figure represents plus or minus amount needed.

For example, if old pinion is plus (+) 1 and the new pinion is minus (-) 3, intersecting figure is (+)0.004 inch (0.10mm). Add this amount to the original shim. Or if the old pinion is (-) 3 and the new pinion is (-) 2, intersecting figure is (-)0.001 inch (0.025mm). Subtract this amount from original shim. **Refer to the Pinion Gear Depth Variance Chart.**

DIFFERENTIAL AND PINION MEASUREMENT

DIFFERENTIAL ZERO END PLAY MEASUREMENT

(1) Place Master Differential Bearing D-134 (D-348) on the case hubs (Fig. 42). Install differential case into housing.

(2) Install a pilot stud at the right side of housing. Attach Dial Indicator to the pilot stud. Load indicator plunger against the back of the ring gear (Fig. 43).

(3) Insert a small pry bar between the bearing cap and left side of differential case. Pry the case as far as possible to right side (Fig. 43). Zero the dial indicator pointer.

(4) Pry the case to left side and **record** the travel distance.

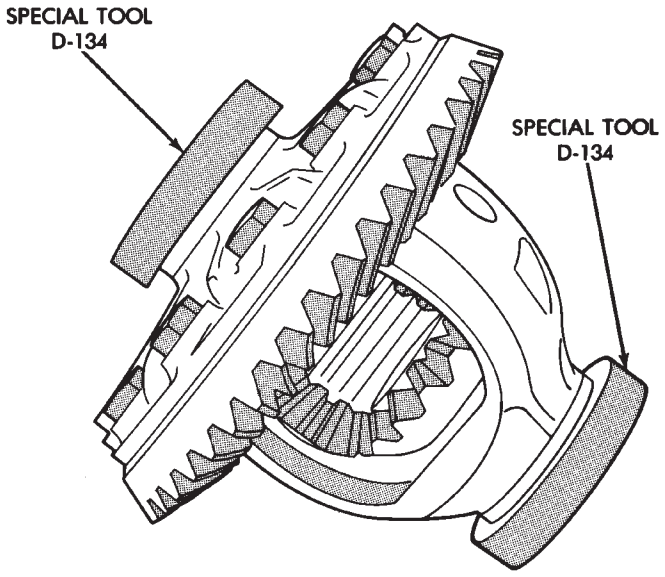

J9202-43

Fig. 42 Master Bearing Tools On Hubs

The measurement above is the shim thickness necessary for case zero end-play. The total thickness will be determined during the ring gear backlash adjustment.

(5) Remove indicator, pilot stud and differential case from housing.

PINION GEAR DEPTH MEASUREMENT

Pinion gear depth measurement is necessary when;

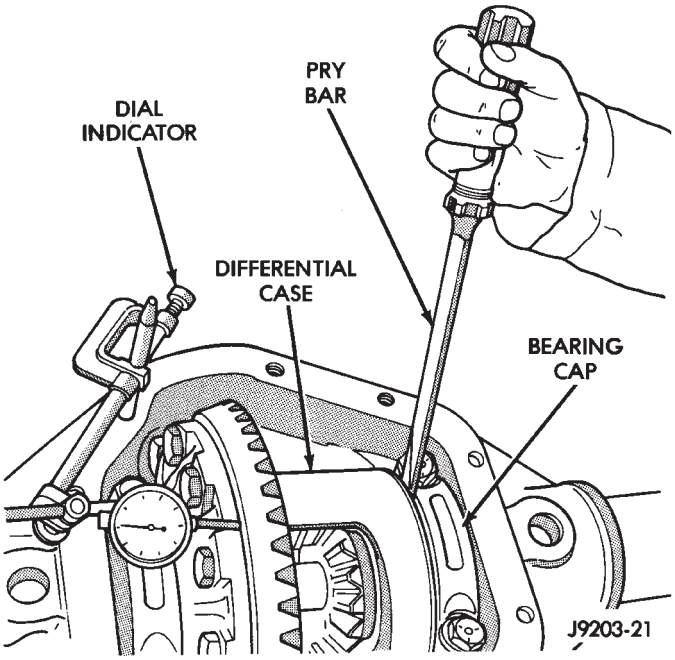

Fig. 43 Differential Case End Play Measurement

- Axle housing or differential case is replaced
- Pinion select shim pack is unknown
- Ring and pinion gears are replaced

Measurements are done with pinion cups and pinion bearings installed in housing. Take measurements with Pinion Gauge Set 6774, Pinion Block 6733 and Dial Indicator C-3339 (Fig. 44).

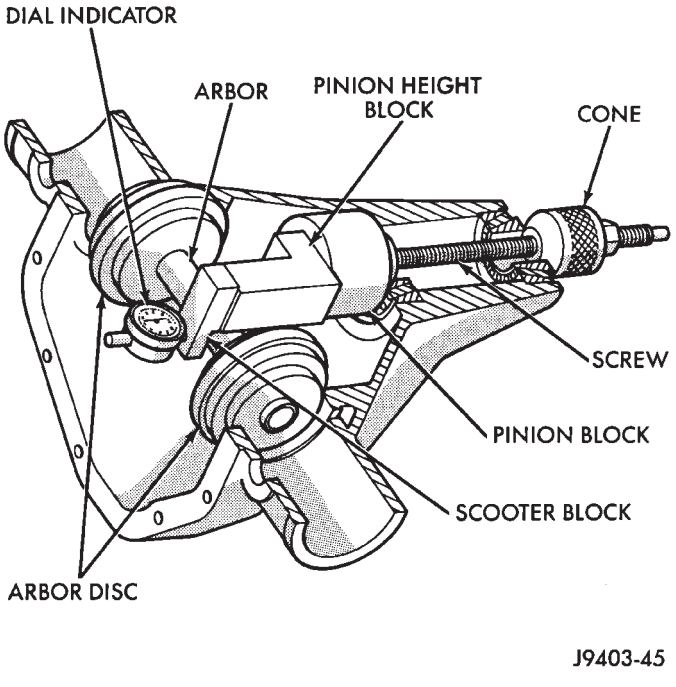

Fig. 44 Pinion Gear Depth Gauge Tools

(1) Install the pinion front bearing cup with Installer D-144 and Handle C-4171 (Fig. 45).

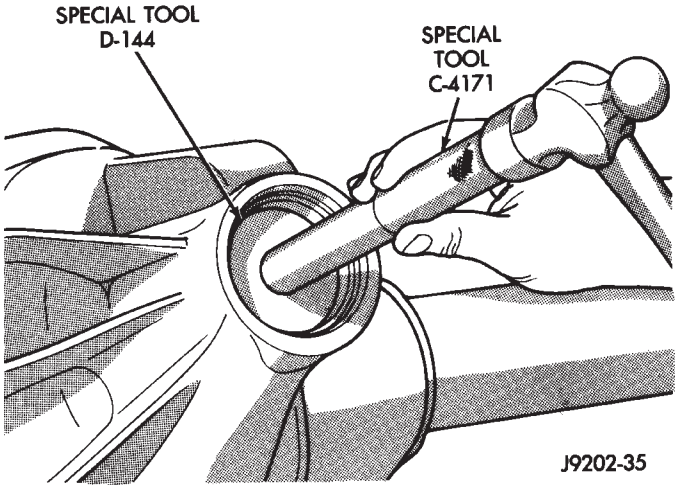

Fig. 45 Pinion Front Bearing Cup Installation

(2) Install the bearing cup with Installer D-146 and Driver Handle C-4171 (Fig. 46). Ensure cup is correctly seated.

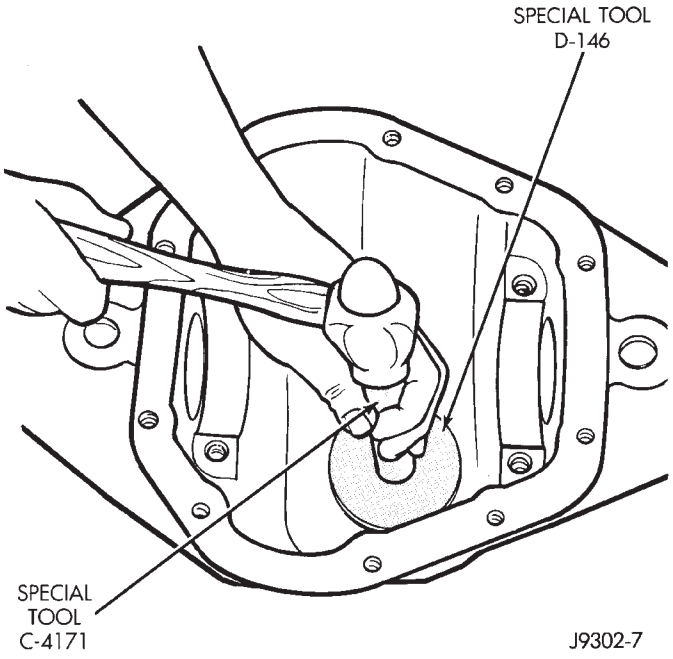

Fig. 46 Pinion Rear Bearing Cup Installation

(3) Assemble Pinion Gauge Set, Pinion Block and pinion bearings. Install assembly into differential pinion gear bore and hand tighten cone (Fig. 47).

(4) Place Arbor Disc 6732 on Arbor D-115-3 and position in the bearing cradles (Fig. 48). Install differential bearing caps on Arbor Discs and tighten caps snug only.

Arbor Discs have different steps to fit other axle sizes. Pick correct size step for axle being serviced.

(5) Firmly place Scooter Block and Dial Indicator on pinion height block tool and zero the dial indicator pointer.

(6) Slide the Scooter Block across the arbor while

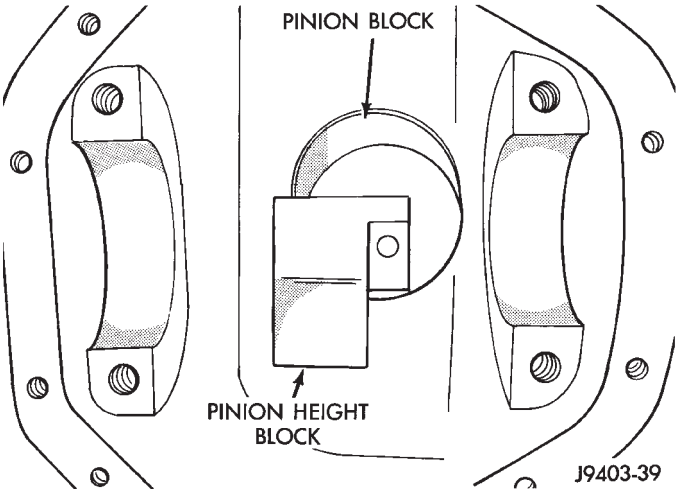

Fig. 47 Pinion Height Block

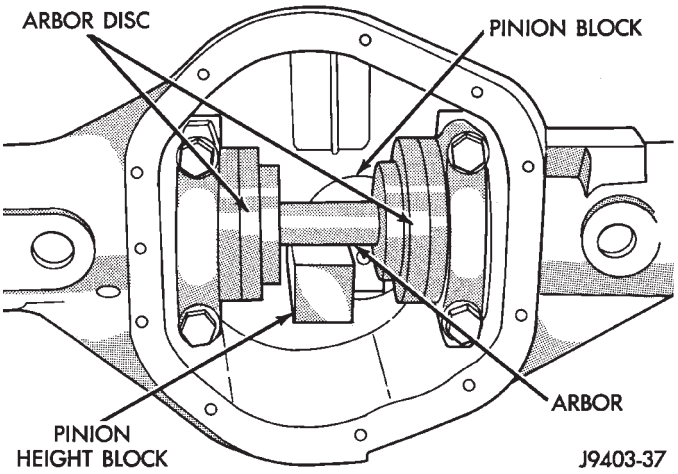

Fig. 48 Gauge Tools In Housing

observing indicator (Fig. 49). Record the longest travel distance, whether inward (-) or outward (+), indicated by the pointer.

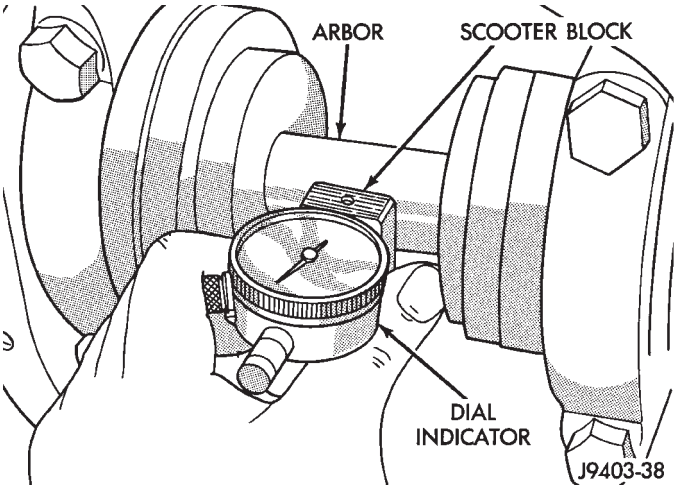

Fig. 49 Pinion Depth Measurement

The plunger travel, plus or minus the variance etched in the gear, is the required thickness for the depth shims.

(7) Measure the thickness of each depth shim with a micrometer. Combine the shims necessary for total required shim pack thickness. **Include oil slinger or baffle thickness with the total shim pack thickness.**

(8) Remove the measurement tools from the differential housing.

PINION GEAR ASSEMBLY/INSTALLATION

(1) Remove rear pinion bearing cup with Remover D-149 and Handle C-4171. Place shims (and baffle if equipped) in the pinion gear rear bearing bore. Install the bearing cup with Installer D-146 and Driver Handle C-4171. Ensure cup is correctly seated.

(3) Install rear bearing and oil slinger on pinion gear with Installer W-262 until completely seated (Fig. 50).

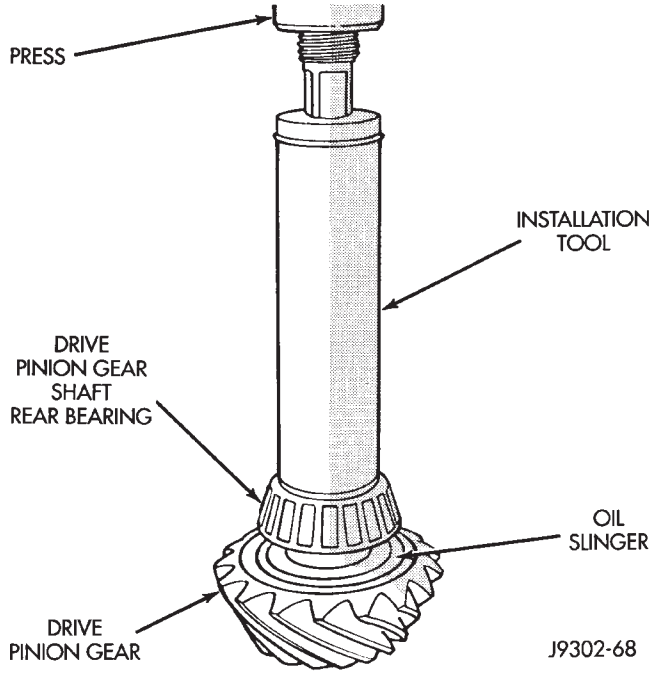

Fig. 50 Pinion Rear Bearing Installation

(4) Assemble preload shims onto pinion shaft.

(5) Install pinion front bearing cone into cup and end yoke thrust washer.

(6) Apply a light coat of gear lubricant on lip of new pinion seal. Install seal with Installer D-163 and Handle C-4171 (Fig. 51).

(7) Install pinion gear into differential housing.

(9) Install yoke with Installer W-162-D and Wrench C-3281 (Fig. 52).

(10) Install the yoke washer and **old nut** on the pinion gear. Use Flange Wrench C-3281 to retain the yoke (Fig. 53). Tighten nut to 216-352 N·m (160-260 ft.lbs.) torque.

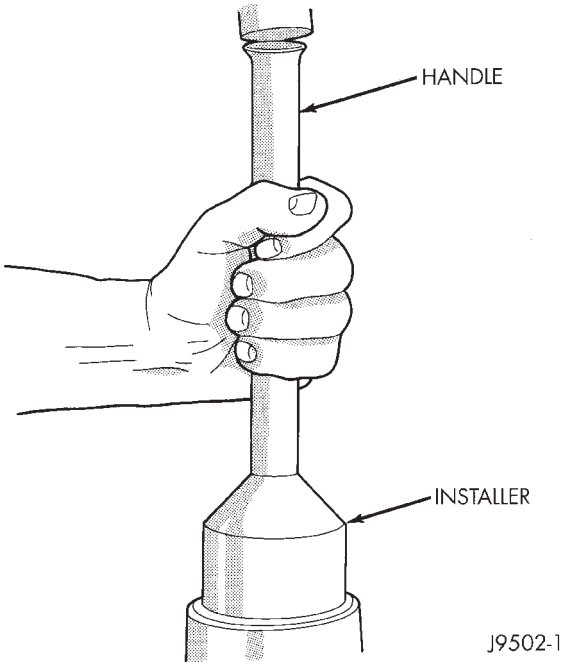

Fig. 51 Pinion Seal Installation

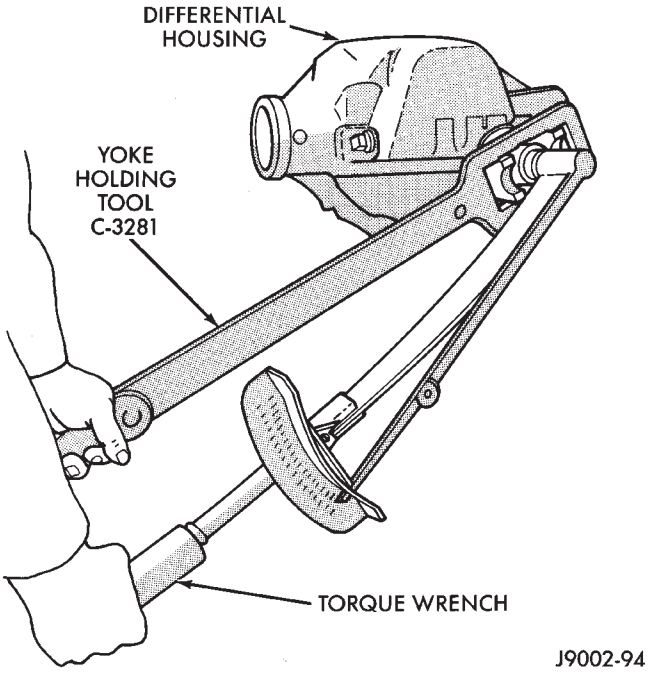

Fig. 53 Tightening Pinion Nut

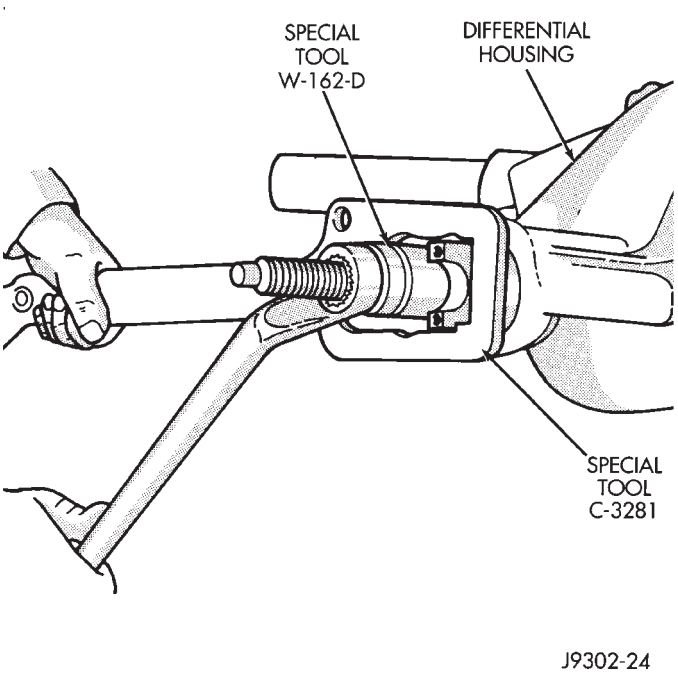

Fig. 52 Pinion Yoke Installation

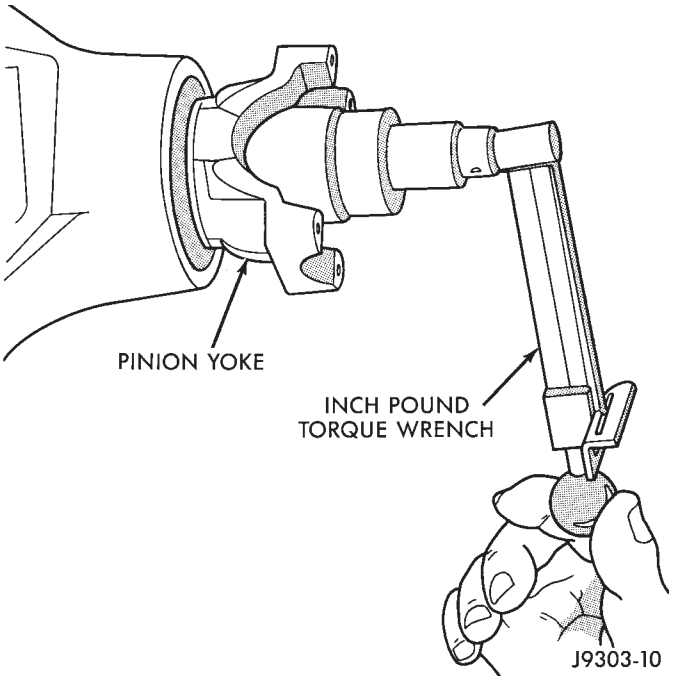

Fig. 54 Check Pinion Gear Torque

(11) Check bearing rotating torque with an inch pound torque wrench (Fig. 54).If torque to rotate is within specification, remove old nut and install new nut. The torque necessary to rotate the pinion gear should be;

- Original Bearings: 1 to 3 N·m (10 to 20 in. lbs.).
- New Bearings: 2 to 5 N·m (15 to 35 in. lbs.).

(12) If rotating torque is high, add shims to decrease torque. If rotating torque is low, remove shims to increase torque.

DIFFERENTIAL SHIM PACK MEASUREMENT AND ADJUSTMENT

(1) Place Master Differential Bearing D-134 (D-348) on the case hubs.

(2) Install a pilot stud at the left side of housing. Attach Dial Indicator to housing. Load the indicator plunger against the back of the ring gear (Fig. 55). Ensure ring and pinion gear teeth are tightly meshed. Zero the indicator.

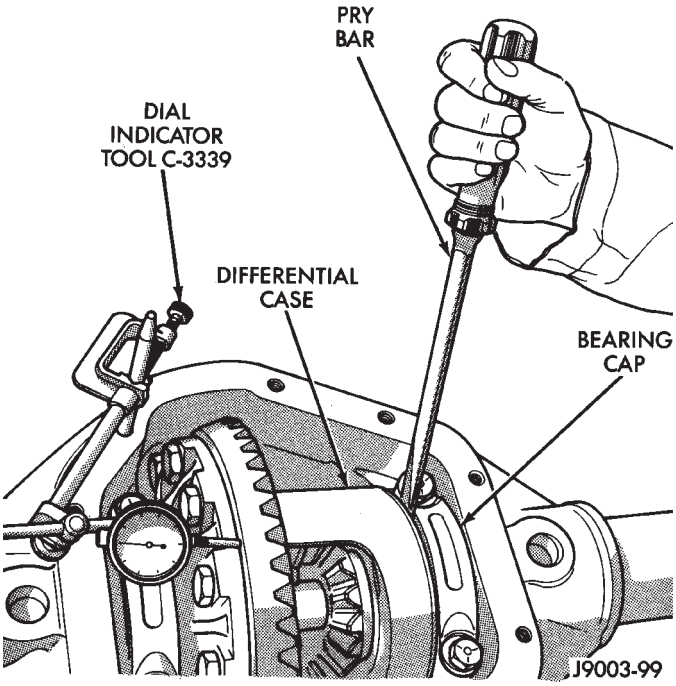

Fig. 55 Shim Pack Measurement

(3) Insert a small pry bar between the bearing cap and left side of differential case. Pry the case as far as possible to right side (Fig. 55). Zero the dial indicator pointer.

(4) Repeat the measurement several times to check consistency. Record the travel distance.

The measurement above shows shim thickness necessary to eliminate ring gear backlash. Subtract this thickness from case zero end-play shim thickness (Fig. 56). The shims must be placed at the ring gear side between the case and bearing.

(5) Remove indicator and pilot stud.

(6) Remove the differential case from housing.

(7) Remove the master bearing tools from the differential case hubs.

(8) Position the backlash shims (with determined thickness) on case hub (ring gear side). Install bearing on the hub with Bearing Installer C-3716-A and Driver Handle C-4171 (Fig. 57).

(9) Position the remaining zero end-play shims on hub at opposite side of case. Include an additional 0.015 in. (0.38 mm) thick shim on this hub. This will provide the required differential bearing preload.

(10) Install bearings on hubs with Installer C-3716-A and Handle C-4171 (Fig. 57).

(11) Match each bearing cup with bearing (original). Install the cups on the bearings.

DIFFERENTIAL INSTALLATION

(1) Position Spreader W-129-B with the tool dowel pins seated in the locating holes (Fig. 58). Install the holddown clamps and tighten the tool turnbuckle finger-tight.

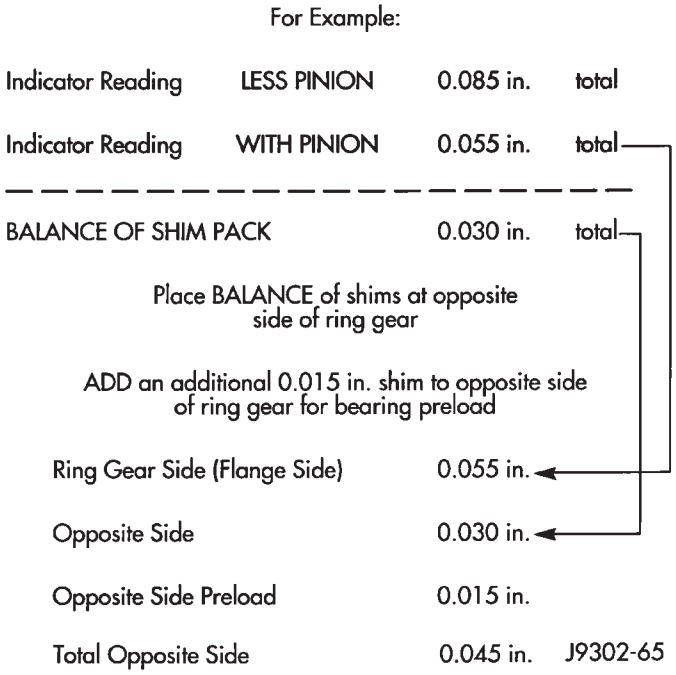

Fig. 56 Shim Pack Calculations

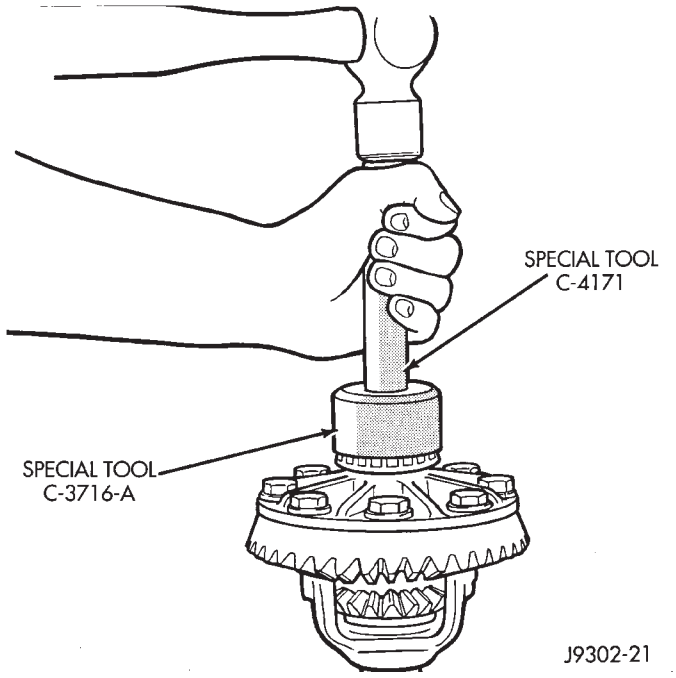

Fig. 57 Differential Bearing Installation

(2) Install a pilot stud at the left side of the differential housing. Attach Dial Indicator to housing pilot stud. Load the indicator plunger against the opposite side of the housing (Fig. 58) and zero the indicator.

CAUTION: Do not spread over 0.38 mm (0.015 in). If the housing is over-separated, it could be distorted or damaged.

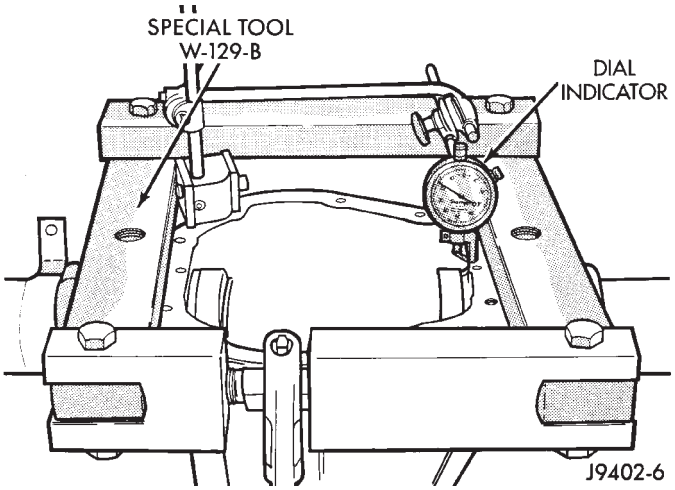

Fig. 58 Spread Differential Housing

(3) Spread the housing enough to install the case in the housing. Measure the distance with the dial indicator (Fig. 58).

(4) Remove the dial indicator.

(5) Install case in the housing. Tap the differential case to ensure the bearings are fully seated (Fig. 59). Remove the spreader.

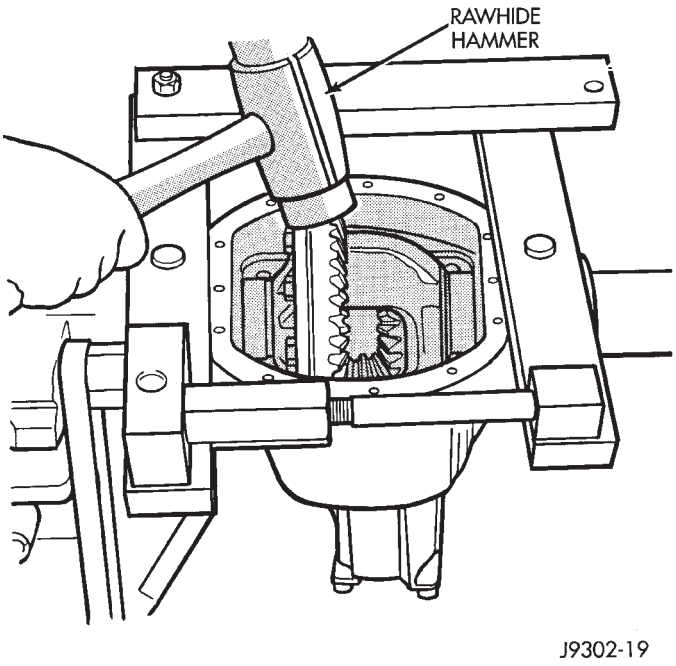

Fig. 59 Differential Installation

(6) Install the bearing caps at their original locations (Fig. 60). Tighten the bearing cap bolts to 61 N·m (45 ft. lbs.) torque.

BACKLASH AND CONTACT PATTERN ANALYSIS

(1) Rotate assembly several revolutions to seat bearings. Measure backlash at three equally spaced locations around the perimeter of the ring gear with a dial indicator (Fig. 61).

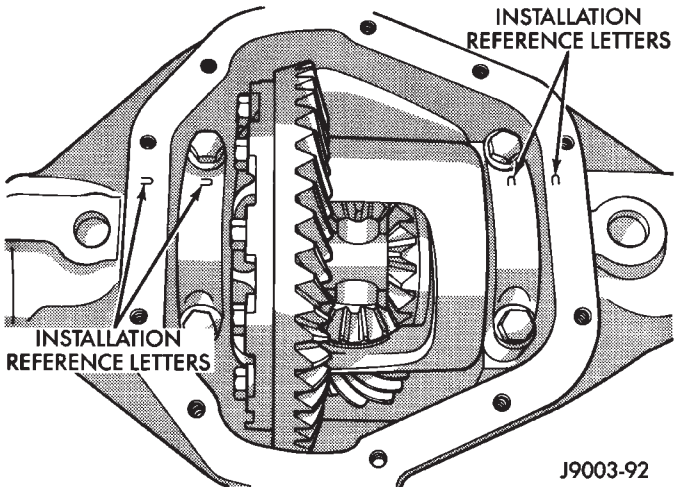

Fig. 60 Differential Bearing Cap Reference Letters

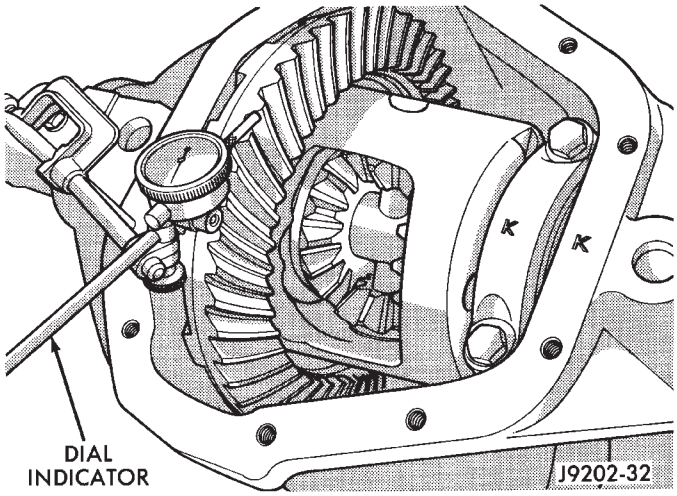

Fig. 61 Ring Gear Backlash Measurement

The ring gear backlash must be within 0.12 - 0.20 mm (0.005 - 0.008 inch). It cannot vary more than 0.05 mm (0.002 inch) between the points checked.

If backlash must be adjusted, transfer shims from one side of carrier to the other side. Adjust the backlash accordingly (Fig. 62). **DO NOT INCREASE THE TOTAL SHIM PACK THICKNESS, EXCESSIVE BEARING PRELOAD AND DAMAGE WILL OCCUR.**

If the mesh and backlash steps have been followed, good gear teeth contact patterns should exist.

The ring gear teeth contact patterns will show if the pinion gear depth is correct. It will also show if the ring gear backlash has been adjusted correctly. The backlash must be maintained within the specified limits until the correct tooth contact patterns are obtained.

(2) Apply a thin coat of hydrated ferric oxide (yellow oxide of iron) to the drive and coast side of the ring gear teeth.

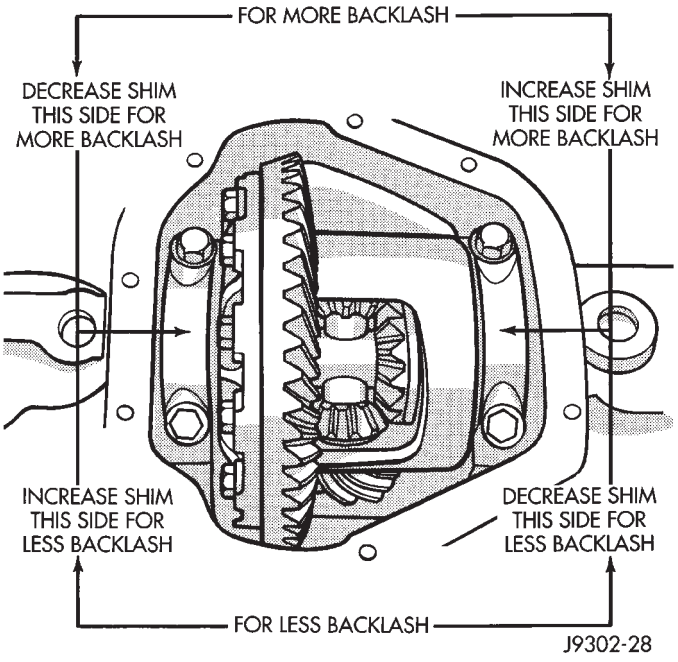

Fig. 62 Backlash Shim Adjustment

(3) Rotate the ring gear one complete revolution in both directions while a load is being applied. Insert a pry bar between the differential housing and the case flange to load gears. This will produce a distinct contact patterns on both the drive side and coast side of the ring gear teeth.

(4) Note patterns in compound. Refer to (Fig. 63) for interpretation of contact patterns and adjust accordingly.

FINAL ASSEMBLY

(1) Install the axle shafts. Refer to Axle Shaft Installation in this Group.

(2) Scrape the residual sealant from the housing and cover mating surfaces. Clean the mating surfaces with mineral spirits. Apply a bead of MOPAR® Silicone Rubber Sealant on the housing cover (Fig. 64). Allow the sealant to cure for a few minutes.

Install the housing cover within 5 minutes after applying the sealant. If not installed the sealant must be removed and another bead applied.

(3) Install the cover on the differential with the attaching bolts. Install the identification tag. Tighten the cover bolts with 41 N·m (30 ft. lbs.) torque.

CAUTION: Overfilling the differential can result in lubricant foaming and overheating.

(4) Refill the differential housing with the specified quantity of MOPAR® Hypoid Gear Lubricant.

(5) Install the fill hole plug and tighten to 34 N·m (25 ft. lbs.) torque.

DRIVE SIDE OF RING GEAR TEETH	COAST SIDE OF RING GEAR TEETH	
HEEL TOE 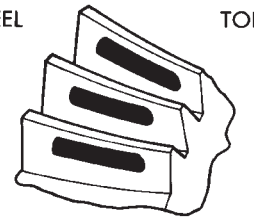	TOE HEEL 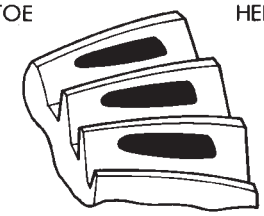	DESIRABLE CONTACT PATTERN. PATTERN SHOULD BE CENTERED ON THE DRIVE SIDE OF TOOTH. PATTERN SHOULD BE CENTERED ON THE COAST SIDE OF TOOTH, BUT MAY BE SLIGHTLY TOWARD THE TOE. THERE SHOULD ALWAYS BE SOME CLEARANCE BETWEEN CONTACT PATTERN AND TOP OF THE TOOTH.
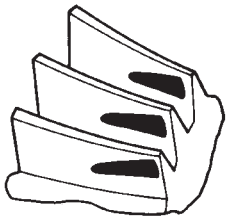	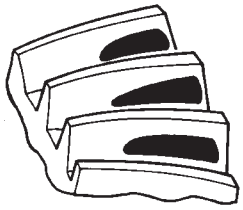	RING GEAR BACKLASH CORRECT. **THINNER** PINION GEAR DEPTH SHIM REQUIRED.
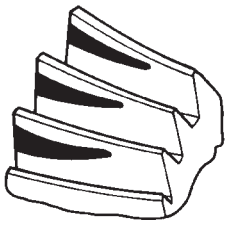	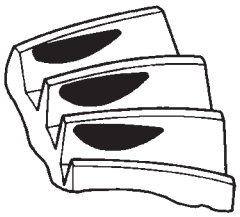	RING GEAR BACKLASH CORRECT. **THICKER** PINION GEAR DEPTH SHIM REQUIRED.
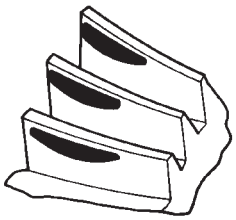	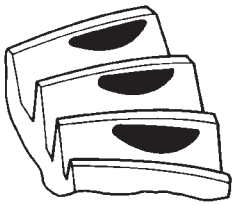	PINION GEAR DEPTH SHIM CORRECT. **DECREASE** RING GEAR BACKLASH.
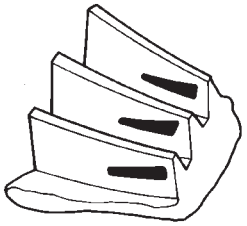	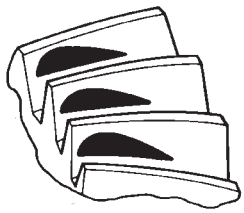	PINION GEAR DEPTH SHIM CORRECT. **INCREASE** RING GEAR BACKLASH.

J9003-24

Fig. 63 Gear Tooth Contact Patterns

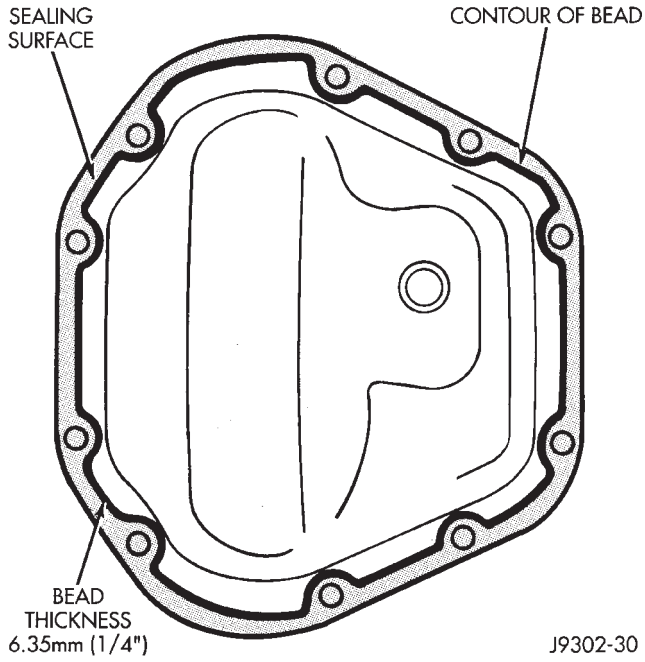

Fig. 64 Typical Housing Cover With Sealant

AXLE SPECIFICATIONS

MODEL 30 FRONT AXLE

Axle Type .....Hypoid
Lubricant.....SAE Thermally Stable 80W-90
Lube Capacity
YJ .....1.65 L (3.76 pts.)
XJ .....1.48 L (3.13 pts.)
Axle Ratio.....3.07 3.55 3.73 4.10
Differential
Side Gear Clearance .0.12-0.20mm (0.005-0.008 in.)
Ring Gear
Diameter .....18.09 cm (7.125 in.)
Backlash.....0-0.15 mm (0.005-0.008 in.)
Pinion Std. Depth.....92.1 mm (3.625 in.)
Pinion Bearing Preload
Original Bearing .....1-2 N·m (10-20 in. lbs.)
New Bearing.....1.5-4 N·m (15-35 in. lbs.)

TORQUE SPECIFICATIONS

XJ FRONT SUSPENSION COMPONENTS

DESCRIPTION.....TORQUE
Shock Absorber
Upper Nut.....11 N·m (8 ft. lbs.)
Lower Nut.....23 N·m (17 ft. lbs.)
Suspension Arm Upper
Front Nut.....74 N·m (55 ft. lbs.)
Rear Nut .....89 N·m (66 ft. lbs.)
Suspension Arm Lower
Front and Rear Nut.....115 N·m (85 ft. lbs.)
Stabilizer Bar
Clamp Bolt.....54 N·m (40 ft. lbs.)
Link Upper Nut .....36 N·m (27 ft. lbs.)
Link Lower Nut .....95 N·m (70 ft. lbs.)
Track Bar
Ball Stud Nut.....81 N·m (60 ft. lbs.)
Axle Bracket Bolt.....100 N·m (74 ft. lbs.)
Track Bar Bracket
Bolts.....125 N·m (92 ft. lbs.)
Nut.....100 N·m (74 ft. lbs.)
Support Bolts.....42 N·m (31 ft. lbs.)

YJ FRONT SUSPENSION COMPONENTS

DESCRIPTION.....TORQUE
Shock Absorber
Upper Nut.....13 N·m (9 ft. lbs.)
Lower Nut.....61 N·m (45 ft. lbs.)
Stabilizer Bar
Clamp Bolt.....41 N·m (30 ft. lbs.)
Link Nut .....61 N·m (45 ft. lbs.)
Track Bar
Frame Bracket Nut.....142 N·m (105 ft. lbs.)
Axle Bracket Nut .....100 N·m (74 ft. lbs.)
Spring
U-Bolt Nut .....122 N·m (90 ft. lbs.)
Front Shackle Bolt.....135 N·m (100 ft. lbs.)
Rear Pivot Bolt.....142 N·m (105 ft. lbs.)

MODEL 30 AXLE

DESCRIPTION.....TORQUE
Fill Hole Plug .....34 N·m (25 ft. lbs.)
Diff. Cover Bolt.....41 N·m (30 ft. lbs.)
Bearing Cap Bolt.....61 N·m (45 ft. lbs.)
Ring Gear Bolt.....95-122 N·m (70-90 ft. lbs.)
Shift Motor Bolt.....11 N·m (8 ft. lbs.)
Axle Nut .....237 N·m (175 ft. lbs.)
Wheel Brg. Bolt.....102 N·m (75 ft. lbs.)
Lower Ball Stud.....108 N·m (80 ft. lbs.)
Upper Ball Stud.....101 N·m (75 ft. lbs.)
ABS Sensor Bolt.....11 N·m (96 in. lbs.)

REAR SUSPENSION AND AXLES

CONTENTS

	page		page
8 1/4 AXLE	30	TORQUE SPECIFICATIONS	51
AXLE NOISE/VIBRATION DIAGNOSIS	9	TRAC-LOK DIFFERENTIAL	45
AXLE SPECIFICATIONS	51	XJ SUSPENSION	3
GENERAL INFORMATION	1	YJ SUSPENSION	6
MODEL 35 AXLE	13		

GENERAL INFORMATION

SUSPENSION COMPONENTS

The Jeep rear suspension is comprised of;

- Drive axle
- Leaf springs
- Dual-action shock absorbers
- Track bar (YJ vehicles)
- Stabilizer bar (XJ vehicles)
- Jounce bumpers

The rear suspension design uses semi-elliptic multi-leaf springs and a solid drive axle. The forward end of the springs are mounted to the frame rail hangers through rubber bushings. The bushings isolate road noise as the springs move. The rearward end of the springs are attached to the frame by the use of shackles. Again the spring and shackles use rubber bushings to isolate road noise. The shackles allow the springs to change their length as the vehicle moves over various road conditions. The spring and axle travel is limited through the use of bumpers mounted on frame.

All suspension components that use bushings should be tightened with the vehicle at normal ride height. If the springs are not at normal ride position, vehicle ride comfort could be affected. Rubber bushings must never be lubricated.

The springs are attached to the axle pads with U-bolts and plates. The springs use a center bolt that holds the spring leafs in position. The bolt is also used to locate the spring assembly to the axle pad.

Ride control is accomplished through the use of dual-action shock absorbers. The shocks dampen the jounce and rebound as the vehicle travels over various road conditions. The top of shock absorbers are bolted to the frame bracket. The bottom of the shocks are bolted to the axle bracket.

The stabilizer bar on the XJ is used to minimize vehicle rear sway during turns. The bar helps the vehicle maintain a flat attitude to the road surface. The bar extends across the underside of the chassis and connects to the frame rails. The links are connected to the axle brackets. All mounting points of the stabilizer bar are isolated by bushings.

The track bar on the YJ is used to minimize rear axle side-to-side movement. The track bar is attached to the frame rail bracket and axle bracket and is isolated with bushings.

The jounce bumpers are used to limit the jounce and rebound travel of the suspension.

AXLES

The Model 35 axle is standard for XJ and YJ vehicles. The 8 1/4 axle is available in XJ vehicles without ABS brakes.

The Model 35 and 8 1/4 axle housings has a cast iron center section. Two steel axle shaft tubes are pressed into the differential housing and welded.

It is not necessary to remove the axle from the vehicle for service. A removable differential cover is provided for routine vehicle service. If the differential housing is damaged, the complete axle assembly can be removed.

For complete drive axle assembly removal and installation refer to Drive Axle Assembly Replacement in this Group.

IDENTIFICATION

Model 35 axle has the assembly part number and gear ratio listed on a tag. The tag is attached to the left side of the housing cover (Fig. 1). Build date identification codes on axles are stamped on the axle shaft tube cover side. The Model 35 axle has a flat housing cover gasket flange at the outer edge (Fig. 1).

The 8 1/4 axle has the build date code and gear ratio tags attached to the housing cover (Fig. 2). The housing cover gasket has a rolled gasket flange at the outer edge (Fig. 2).

- The Model 35 axle has shaft tubes that are 2.625 inch (66.67 mm) in diameter.
- The 8 1/4 axle has axle shaft tubes that are 3.0-inch (76.2 mm) in diameter.

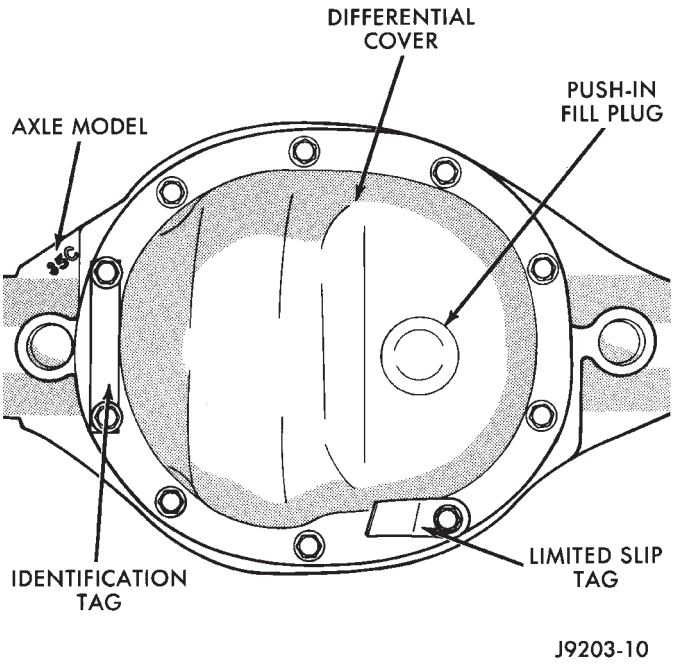

Fig. 1 Model 35 Differential Cover

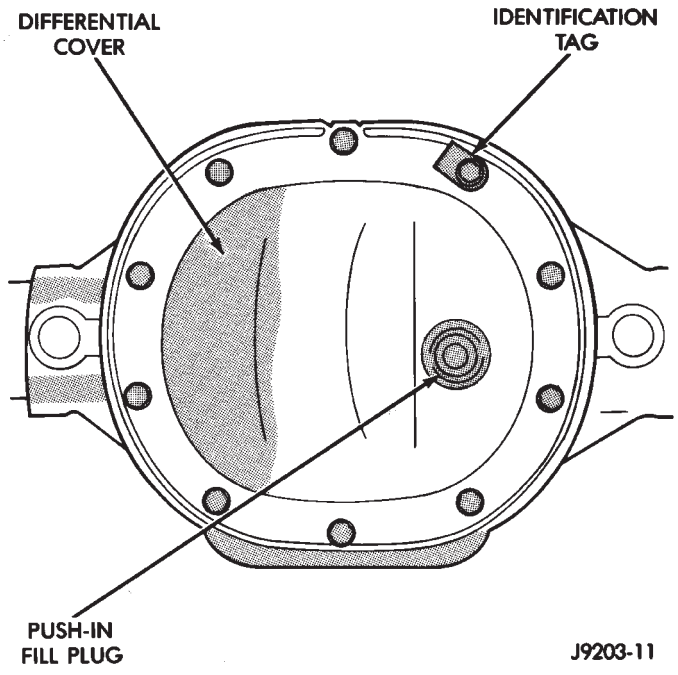

Fig. 2 8 1/4 Differential Cover

STANDARD DIFFERENTIAL OPERATION

The differential gear system divides the torque between the axle shafts. It allows the axle shafts to rotate at different speeds when turning corners.

Each differential side gear is splined to an axle shaft. The pinion gears are mounted on a pinion mate shaft and are free to rotate on the shaft. The pinion gear is fitted in a bore in the differential case and is positioned at a right angle to the axle shafts.

In operation, power flow occurs as follows:

- The pinion gear rotates the ring gear
- The ring gear (bolted to the differential case) rotates the case
- The differential pinion gears (mounted on the pinion mate shaft in the case) rotate the side gears
- The side gears (splined to the axle shafts) rotate the shafts

During straight-ahead driving, the differential pinion gears do not rotate on the pinion mate shaft. This occurs because input torque applied to the gears is divided and distributed equally between the two side gears. As a result, the pinion gears revolve with the pinion mate shaft but do not rotate around it (Fig. 3).

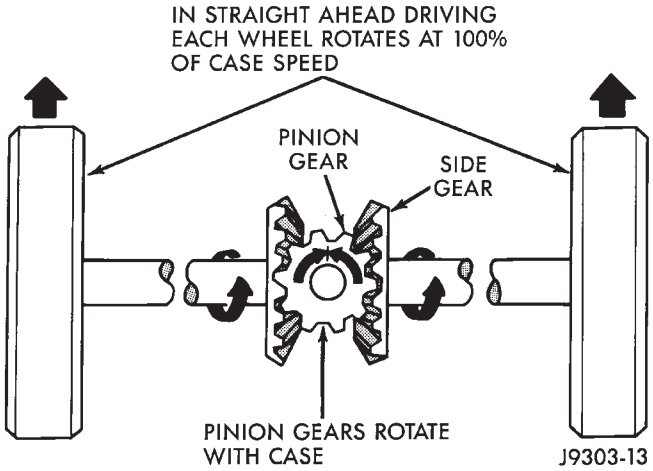

Fig. 3 Differential Operation—Straight-Ahead Driving

When turning corners, the outside wheel must travel a greater distance than the inside wheel in order to complete a turn. The difference must be compensated for, to prevent the tires from scuffing and skidding through turns. To accomplish this, the differential allows the axle shafts to turn at unequal speeds (Fig. 4). In this instance, the input torque applied to the pinion gears is not divided equally. The pinion gears now rotate around the pinion mate shaft in opposite directions. This allows the side gear and axle shaft attached to the outside wheel to rotate at a faster speed.

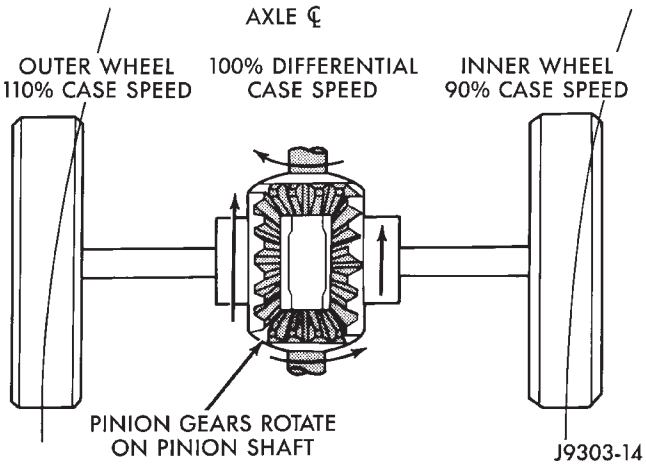

Fig. 4 Differential Operation—On Turns

XJ SUSPENSION

INDEX

	page		page
Leaf Spring	4	Spring and Shock Diagnosis	3
Leaf Spring Eye Bushing Replacement	5	Stabilizer Bar	5
Shock Absorber	4		

SPRING AND SHOCK DIAGNOSIS

A noise from the shock absorber or spring bushings can be produced if movement between the rubber bushings and the metal occurs. This noise can usually be stopped by tightening the nuts. If the noise persists, inspect for damaged and worn bushings. Repair as necessary.

The shock absorbers are not refillable or adjustable. If a malfunction occurs, the shock absorber must be replaced. To test a shock absorber, hold it in an upright position and force the piston into and out of the cylinder four or five times. The action throughout each stroke should be smooth and even.

The spring eye and shock absorber bushings do not require any type of lubrication. **Do not attempt to stop spring bushing noise by lubricating them. Grease and mineral oil-base lubricants will deteriorate the bushing rubber.**

If the vehicle is used for severe, off-road operation, the springs should be examined regularly. Check for broken and shifted components.

CAUTION: Suspension components with rubber bushings should be tightened with the vehicle at normal height. It is important to have the springs supporting the weight of the vehicle when the fasteners are torqued. If springs are not at their normal ride position, vehicle ride comfort could be affected and premature bushing wear may occur. Rubber bushings must never be lubricated.

SPRING AND SHOCK ABSORBER DIAGNOSIS

CONDITION	POSSIBLE CAUSES	CORRECTION
SPRING SAGS	1. Broken leaves	1. Replace broken leaves
	2. Spring fatigue	2. Replace spring
SPRING NOISE	1. Loose U-bolts	1. Tighten U-bolts to specified torque
	2. Worn bushings	2. Replace bushings
	3. Worn or missing leaf liners	3. Replace leaf liners
SHOCK ABSORBERS NOISY	1. Loose mounting bolt or nut	1. Tighten bolt or nut to specified torque
	2. Worn bushings	2. Replace shock absorber
	3. Leaking shock	3. Replace shock

J9503-2

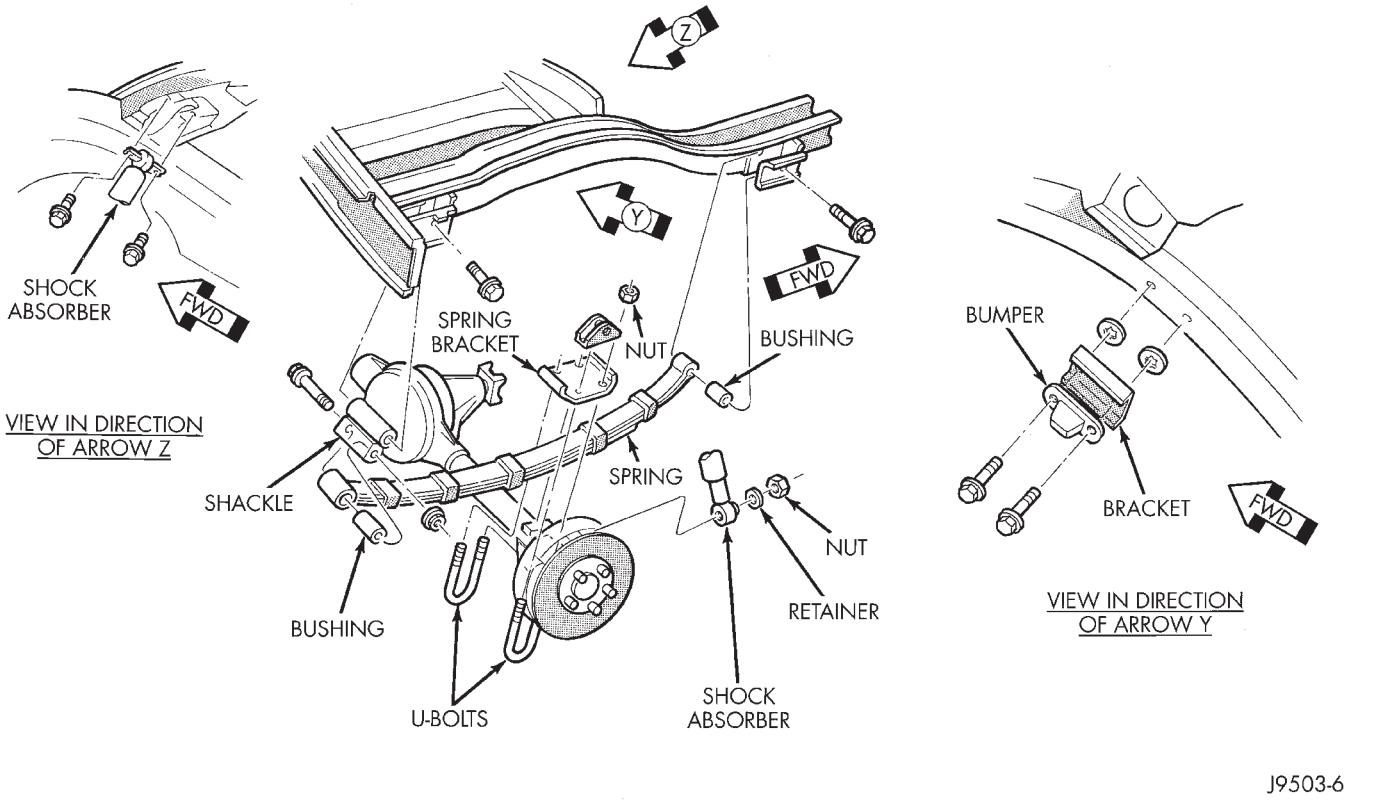

Fig. 1 Spring & Shock Absorber—XJ Vehicles

SHOCK ABSORBER

REMOVAL

(1) Remove the shock absorber upper bolts from the frame bracket (Fig. 1).

(2) Remove the lower attaching nut and washer from the bracket stud. Remove the shock absorber.

INSTALLATION

(1) Install the shock absorber lower eye on the spring bracket stud. Install the shock absorber and upper bolts on the frame bracket (Fig. 1).

(2) Tighten the lower nut to 62 N·m (46 ft. lbs.) torque.

(3) Tighten the upper bolts to 23 N·m (17 ft. lbs.) torque.

LEAF SPRING

REMOVAL

(1) Raise vehicle at frame.

(2) Remove the wheel and tire assemblies.

(3) Support axle with hydraulic jack to relieve axle weight.

(4) Disconnect the shock absorber from the axle bracket or the spring bracket (Fig. 1).

(5) Disconnect the stabilizer bar link from the spring bracket stud.

(6) Remove nuts, U-bolts and spring bracket from axle (Fig. 1).

(7) Remove nut and bolt attaching spring front eye to shackle (Fig. 1).

(8) Remove nut and bolt from spring rear eye (Fig. 1).

(9) Remove spring from vehicle.

INSTALLATION

(1) Position the spring front eye in the bracket. Loosely install the attaching bolt and nut (Fig. 1). Do not tighten at this time.

(2) Position the rear eye in the shackle bracket. Loosely install the attaching bolt and nut (Fig. 1). Do not tighten at this time.

(3) Position the axle. Install the spring bracket, U-bolts and nuts (Fig. 1). Tighten the nuts to 70 N·m (52 ft. lbs.) torque.

(4) Connect the stabilizer bar link to the spring bracket.

(5) Connect the shock absorber to the axle bracket or spring bracket.

(6) Remove the hydraulic jack.

(7) Lower the vehicle.

(8) Tighten the spring front eye attaching bolts to 148 N·m (109 ft. lbs.) torque.

(9) Tighten the spring rear eye attaching bolts to 108 N·m (80 ft. lbs.) torque.

LEAF SPRING EYE BUSHING REPLACEMENT

(1) Assemble tools shown (Fig. 2). Tighten the nut located at the socket wrench end of the threaded rod until the bushing is forced out.

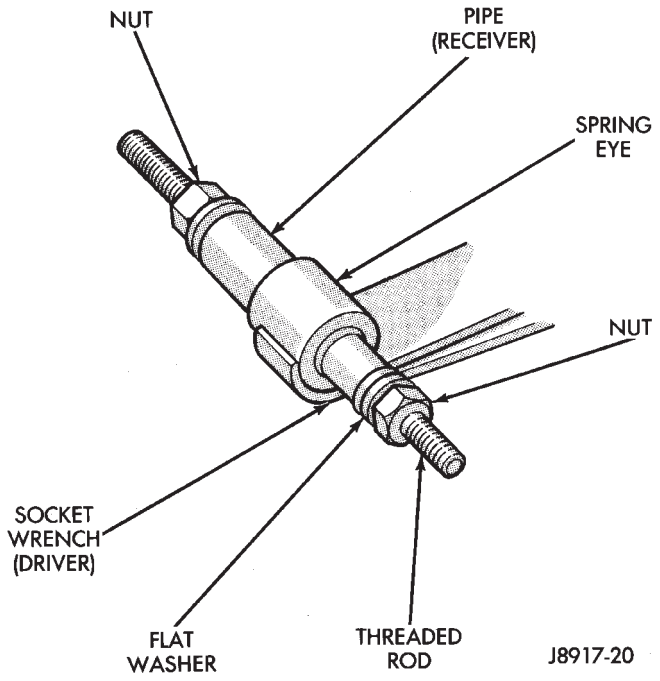

Fig. 2 Spring Eye Bushing Removal

(2) Assemble and align the bushing installation tools.

(3) Align the bushing with the spring eye. Tighten the nut located at the socket wrench end of the threaded rod. Tighten until the bushing is forced into the spring eye.

The bushing must be centered in the spring eye. The ends of the bushing must be flush or slightly recessed within the end surfaces of the spring eye.

STABILIZER BAR

REMOVAL

(1) Raise and support the vehicle.

(2) Disconnect stabilizer bar links from spring brackets (Fig. 3).

(3) Disconnect the stabilizer bar brackets from the frame rails. Remove the stabilizer bar and links.

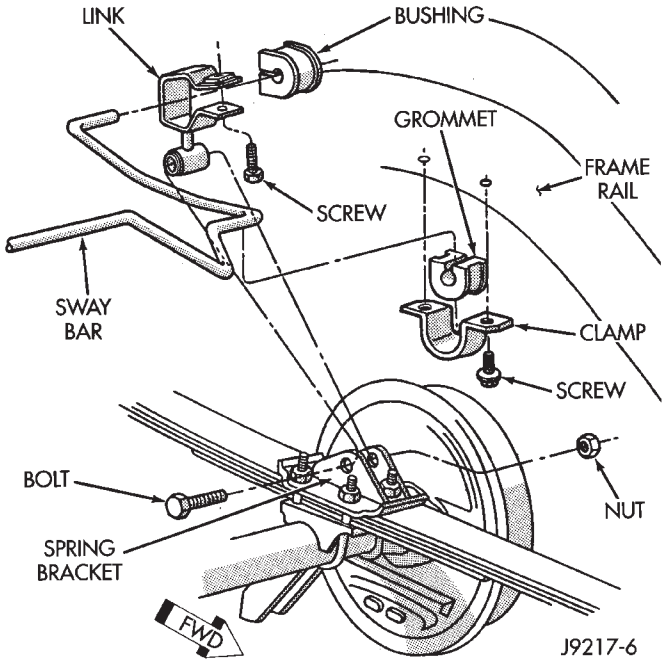

Fig. 3 Stabilizer Bar—XJ Vehicles

INSTALLATION

(1) Position the stabilizer bar links at the spring brackets (Fig. 3). Install the attaching bolts and nuts and tighten to 74 N·m (55 ft. lbs.) torque.

(2) Attach the stabilizer bar to the frame rail brackets with the bolts. Tighten to 54 N·m (40 ft. lbs.).

(3) Remove the supports and lower the vehicle.

YJ SUSPENSION

INDEX

	page		page
Leaf Spring	7	Spring and Shock Diagnosis	6
Leaf Spring Eye Bushing Replacement	7	Track Bar	8
Shock Absorber	7		

SPRING AND SHOCK DIAGNOSIS

A noise from the shock absorber or spring bushings can be produced if movement between the rubber bushings and the metal occurs. This noise can usually be stopped by tightening the nuts. If the noise persists, inspect for damaged and worn bushings. Repair as necessary.

The shock absorbers are not refillable or adjustable. If a malfunction occurs, the shock absorber must be replaced. To test a shock absorber, hold it in an upright position and force the piston into and out of the cylinder four or five times. The action throughout each stroke should be smooth and even.

The spring eye and shock absorber bushings do not require any type of lubrication. **Do not attempt to stop spring bushing noise by lubricating them. Grease and mineral oil-base lubricants will deteriorate the bushing rubber.**

If the vehicle is used for severe, off-road operation, the springs should be examined regularly. Check for broken and shifted components.

CAUTION: Suspension components with rubber bushings should be tightened with the vehicle at normal height. It is important to have the springs supporting the weight of the vehicle when the fasteners are torqued. If springs are not at their normal ride position, vehicle ride comfort could be affected and premature bushing wear may occur. Rubber bushings must never be lubricated.

SPRING AND SHOCK ABSORBER DIAGNOSIS

CONDITION	POSSIBLE CAUSES	CORRECTION
SPRING SAGS	1. Broken leaves	1. Replace broken leaves
	2. Spring fatigue	2. Replace spring
SPRING NOISE	1. Loose U-bolts	1. Tighten U-bolts to specified torque
	2. Worn bushings	2. Replace bushings
	3. Worn or missing leaf liners	3. Replace leaf liners
SHOCK ABSORBERS NOISY	1. Loose mounting bolt or nut	1. Tighten bolt or nut to specified torque
	2. Worn bushings	2. Replace shock absorber
	3. Leaking shock	3. Replace shock

J9503-2

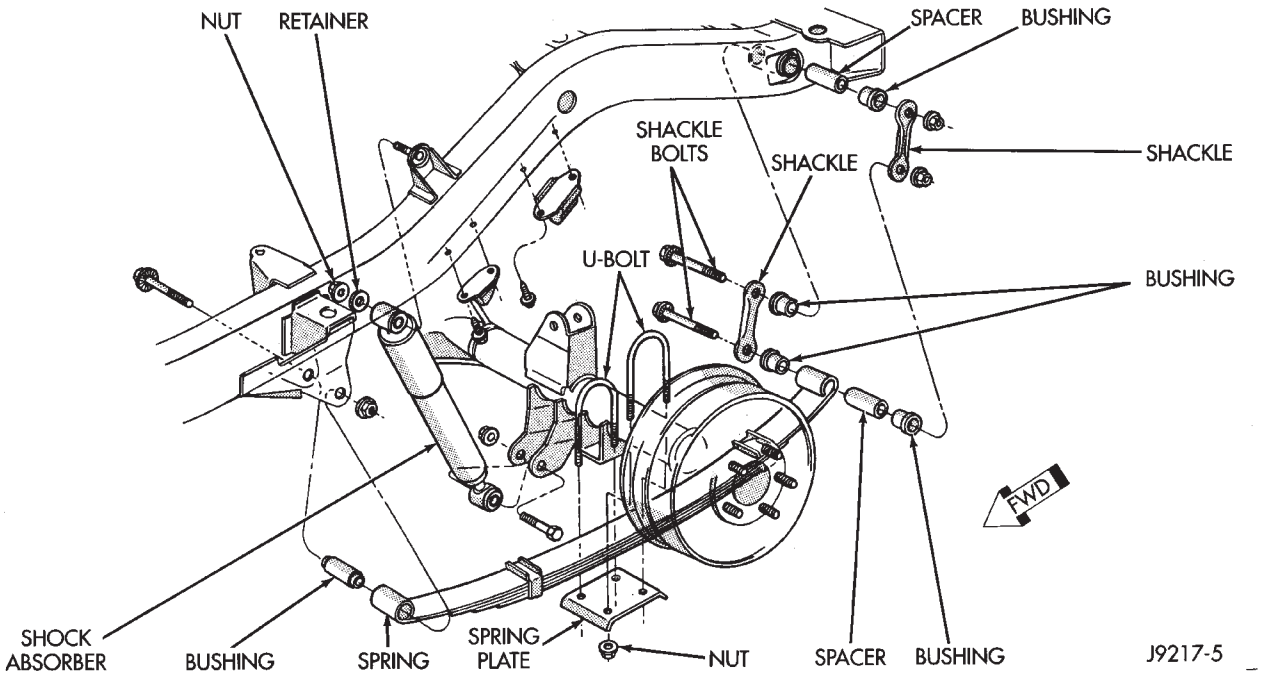

Fig. 1 Spring & Shock Absorber—YJ Vehicles

SHOCK ABSORBER

REMOVAL

(1) Remove the upper attaching nut and washer from the frame bracket stud (Fig. 1).

(2) Remove the lower attaching nut, washers and bolt from the axle bracket. Remove the shock absorber (Fig. 1).

INSTALLATION

(1) Position the shock upper eye on the frame bracket stud. Install the washer and nut (Fig. 1).

(2) Position the shock lower eye in the axle shaft tube bracket. Install the lower attaching bolt, washers and nut (Fig. 1).

(3) Tighten the upper and lower shock bolts to 61 N·m (45 ft. lbs.) torque.

LEAF SPRING

REMOVAL

(1) Raise the vehicle at the frame.

(2) Use a hydraulic jack to relieve the axle weight.

(3) Remove the wheel and tire.

(4) Remove the nuts, the U-bolts and spring bracket from the axle (Fig. 1).

(5) Remove the nut and bolt that attaches the spring rear eye to the shackle (Fig. 1).

(6) Remove the nut and bolt from the spring front eye (Fig. 1).

(7) Remove the spring from the vehicle.

INSTALLATION

(1) Position the spring front eye in the bracket. Loosely install the attaching bolt and nut (Fig. 1). Do not tighten at this time.

(2) Position the rear eye in the shackle bracket. Loosely install the attaching bolt and nut (Fig. 1). Do not tighten at this time.

(3) Align the rear spring center bolt with the locating hole in the rear axle spring pad.

(4) Lower the rear axle until it is completely supported by the spring.

Ensure that the spring center bolt is seated in the axle spring pad locating hole. Realign the center bolt with the locating hole, if necessary.

(5) Position the axle. Install the spring bracket, U-bolts and nuts (Fig. 1). Tighten the U-bolt nuts to 122 N·m (90 ft. lbs.) torque.

(6) Remove the hydraulic jack.

(7) Remove the support stands and lower the vehicle.

(8) Tighten the spring shackle plate bolts and front spring eye bolt to 135 N·m (100 ft. lbs.) torque.

LEAF SPRING EYE BUSHING REPLACEMENT

(1) Assemble tools shown (Fig. 2). Tighten the nut located at the socket wrench end of the threaded rod until the bushing is forced out.

(2) Assemble and align the bushing installation tools.

(3) Align the bushing with the spring eye and tighten the nut located at the socket wrench end of the threaded rod. Tighten until the bushing is forced into the spring eye.

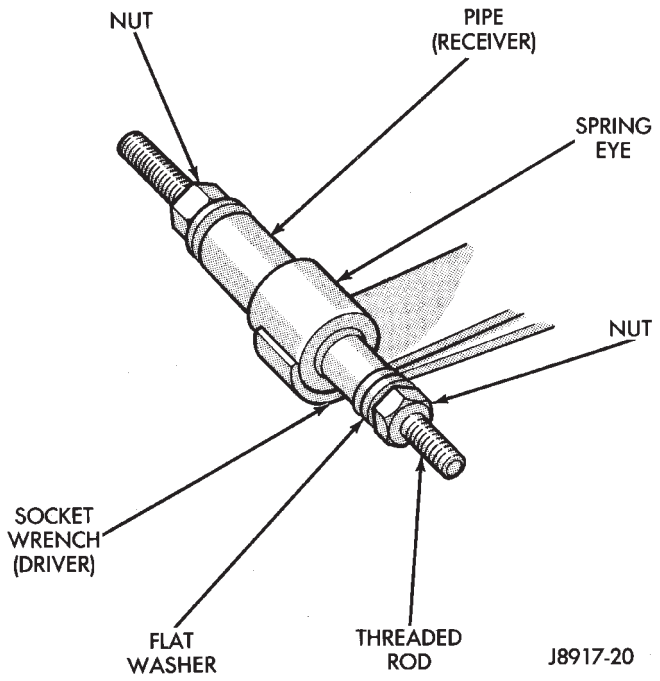

Fig. 2 Spring Eye Bushing Removal

The bushing must be centered in the spring eye. The ends of the bushing must be flush or slightly recessed within the end surfaces of the spring eye.

TRACK BAR

REMOVAL

(1) Raise the vehicle. Position a hydraulic jack under the axle and raise the axle to relieve the springs of axle weight.

(2) Remove the fasteners that attach the track bar to the frame bracket and axle bracket (Fig. 3).

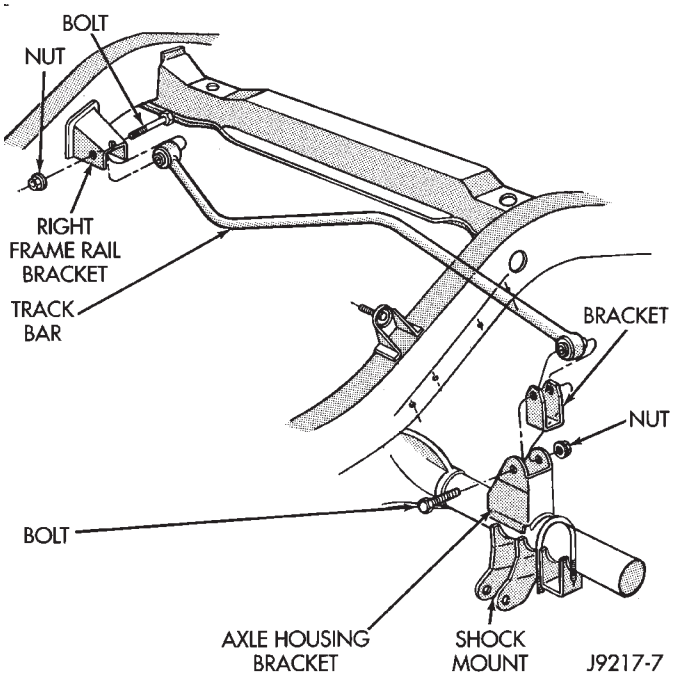

Fig. 3 Track Bar—YJ Vehicles

(3) Remove the track bar from the vehicle.

INSTALLATION

(1) Position the ends of the track bar in the frame and axle brackets (Fig. 3).

(2) Install and tighten the track bar attaching nuts to 168 N·m (125 ft. lbs.) torque.

(3) Remove the supports and lower the vehicle.

AXLE NOISE/VIBRATION DIAGNOSIS

INDEX

page

Driveline Snap 10
Gear and Bearing Noise 9
General Information 9
Limited Slip Differential 10
Low Speed Knock 10
Rear Axle Alignment 10
Vibration 10

GENERAL INFORMATION

Axle bearing problem conditions are usually caused by:

- Insufficient or incorrect lubricant
- Foreign matter/water contamination
- Incorrect bearing preload torque adjustment
- Incorrect backlash (to tight)

When serviced, the bearings must be cleaned thoroughly. They should be dried with lint-free shop towels. **Never dry bearings with compressed air. This will overheat them and brinell the bearing surfaces. This will result in noisy operation after repair.**

Axle gear problem conditions are usually the result of:

- Insufficient lubrication
- Incorrect or contaminated lubricant
- Overloading (excessive engine torque) or exceeding vehicle weight capacity
- Incorrect clearance or backlash adjustment

Insufficient lubrication is usually the result of a housing cover leak. It can also be from worn axle shaft or pinion gear seals. Check for cracks or porous areas in the housing or tubes.

Using the wrong lubricant will cause overheating and gear failure. Gear tooth cracking and bearing spalling are indicators of this.

Axle component breakage is most often the result of:

- Severe overloading
- Insufficient lubricant
- Incorrect lubricant
- Improperly tightened components

Overloading occurs when towing heavier than recommended loads. Component breakage can occur when the wheels are spun excessively. Incorrect lubricant quantity contributes to breakage. Loose differential components can also cause breakage.

Incorrect bearing preload or gear backlash will not result in component breakage. Mis-adjustment will produce enough noise to cause service repair before a failure occurs. If a mis-adjustment condition is not corrected, component failure can result.

Excessive bearing preload may not be noisy. This condition will cause high temperature which can result in bearing failure.

GEAR AND BEARING NOISE

GEAR NOISE

Axle gear noise can be caused by insufficient lubricant. Incorrect backlash, tooth contact, or worn/damaged gears can cause noise.

Gear noise usually happens at a specific speed range. The range is 30 to 40 mph, or above 50 mph. The noise can also occur during a specific type of driving condition. These conditions are acceleration, deceleration, coast, or constant load.

When road testing, accelerate the vehicle to the speed range where the noise is the greatest. Shift out-of-gear and coast through the peak-noise range. If the noise stops or changes greatly, check for insufficient lubricant. Incorrect ring gear backlash, or gear damage can cause noise changes.

Differential side and pinion gears can be checked by turning the vehicle. They usually do not cause noise in straight-ahead driving. These gears are loaded during vehicle turns. If noise does occur during vehicle turns, the side or pinion gears could be worn or damaged. A worn pinion gear mate shaft can also cause a snapping or a knocking noise.

BEARING NOISE

The axle shaft, differential and pinion gear bearings can all produce noise when worn or damaged. Bearing noise can be either a whining, or a growling sound.

Pinion gear bearings have a constant-pitch noise. This noise changes only with vehicle speed. Pinion bearing noise will be higher because it rotates at a faster rate. Drive the vehicle and load the differential. If bearing noise occurs the pinion rear bearing is the source of the noise. If the bearing noise is heard during a coast, front bearing is the source.

Worn, damaged differential bearings usually produce a low pitch noise. Differential bearing noise is similar to pinion bearing. The pitch of differential bearing noise is also constant and varies only with vehicle speed.

Axle shaft bearings produce noise and vibration when worn or damaged. The noise generally changes when the bearings are loaded. Road test the vehicle. Turn the vehicle sharply to the left and to the right.

This will load the bearings and change the noise level. Where axle bearing damage is slight, the noise is usually not noticeable at speeds above 30 mph.

LOW SPEED KNOCK

Low speed knock is generally caused by a worn U-joint or by worn side-gear thrust washers. A worn pinion gear shaft bore will also cause low speed knock.

VIBRATION

Vibration at the rear of the vehicle is usually caused by a:

- Damaged drive shaft
- Missing drive shaft balance weight
- Worn, out-of-balance wheels
- Loose wheel lug nuts
- Worn U-joint
- Loose spring U-bolts
- Loose/broken springs
- Damaged axle shaft bearings
- Loose pinion gear nut
- Excessive pinion yoke run out
- Bent axle shaft

Check for loose or damaged front-end components or engine/transmission mounts. These components can contribute to what appears to be a rear-end vibration. Do not overlook engine accessories, brackets and drive belts.

All driveline components should be examined before starting any repair.

Refer to Group 22, Wheels and Tires for additional information.

DRIVELINE SNAP

A snap or clunk noise when the vehicle is shifted into gear (or the clutch engaged), can be caused by:

- High engine idle speed
- Loose engine/transmission/transfer case mounts
- Worn U-joints
- Loose spring mounts
- Loose pinion gear nut and yoke
- Excessive ring gear backlash
- Excessive side gear\ase clearance

The source of a snap or a clunk noise can be determined with the assistance of a helper. Raise the vehicle on a hoist with the wheels free to rotate. Instruct the helper to shift the transmission into gear. Listen for the noise, a mechanics stethoscope is helpful in isolating the source of a noise.

REAR AXLE ALIGNMENT

MEASUREMENT

The following procedure can be used to determine if abnormal rear tire tread wear is the result of a bent or deformed rear axle shaft.

(1) Raise both rear wheels off the surface with a frame contact hoist.

(2) Attach a one-inch long piece of masking tape at the center of each tire tread for use as reference marks.

(3) Rotate the rear wheels until both reference marks face the front of the vehicle. Measure the distance between the outside edges of the two pieces of tape. Record this measurement as the front of tire (FTR) measurement.

(4) Rotate the rear wheels until both reference marks face the rear of the vehicle. Measure the distance between the outside edges of the two pieces of tape. Record this measurement as the rear of tire (RTR) measurement.

(5) Subtract the (RTR) measurement from the (FTR) measurement to obtain the amount of wheel toe. The acceptable rear wheel toe-in position is 1/16 inch (1.6 mm) to 3/16 inch (4.8 mm) toe-out.

(6) Rotate the rear wheels until the reference marks are facing downward. Measure the distance between the outside edges of the two pieces of tape. Record this measurement as the bottom of tire (BTR) measurement.

(7) Average the (FTR) and the (RTR) distance measurements. Subtract the (BTR) measurement from this average distance to obtain the camber. The acceptable amount of camber is 1/16 inch to 3/32 inch (1.6 to 2.4 mm).

(FTR + RTR) DIVIDED BY 2 (TWO) MINUS BTR EQUALS CAMBER

If the (BTR) distance measurement is less than the average FTR and RTR distance measurement, the camber will be positive (+). If the (BTR) distance measurement is greater than the average FTR and RTR distance, the camber will be negative (-).

If the toe position or camber is not acceptable, a bent or deformed rear axle shaft is most likely the cause.

LIMITED SLIP DIFFERENTIAL

Under normal traction conditions, engine torque is divided evenly. With low-traction surfaces, engine torque is transferred to the wheel with the most tire traction. When diagnosing a limited-slip differential the wheel with the least traction can continue spinning.

The most common problem is a chatter noise when turning corners. Check for incorrect or contaminated lubricant. Replace the gear lubricant if necessary.

- With Trac-Lok™ differentials add a container of MOPAR Trac-Lok Lubricant.

This will correct the condition in most instances. If the chatter persists, clutch damage could have occurred.

After changing the lubricant, drive the vehicle and make 10 to 12 slow, figure-eight turns. This maneuver will pump lubricant through the clutches.

SERVICE DIAGNOSIS

CONDITION	POSSIBLE CAUSES	CORRECTION
WHEEL NOISE	1. Wheel loose. 2. Faulty, brinelled wheel bearing.	1. Tighten loose nuts. 2. Faulty or brinelled bearings must be replaced.
AXLE SHAFT NOISE	1. Misaligned axle shaft tube. 2. Bent or sprung axle shaft. 3. End play in drive pinion bearings. 4. Excessive gear backlash between ring gear and pinion gear. 5. Improper adjustment of drive pinion gear shaft bearings. 6. Loose drive pinion gearshaft yoke nut. 7. Improper wheel bearing adjustment. 8. Scuffed gear tooth contact surfaces.	1. Inspect axle shaft tube alignment. Correct as necessary. 2. Replace bent or sprung axle shaft. 3. Refer to Drive Pinion Bearing Pre-Load Adjustment. 4. Check adjustment of ring gear backlash and pinion gear. Correct as necessary. 5. Adjust drive pinion shaft bearings. 6. Tighten drive pinion gearshaft yoke nut with specified torque. 7. Readjust as necessary. 8. If necessary, replace scuffed gears.
AXLE SHAFT BROKE	1. Misaligned axle shaft tube. 2. Vehicle overloaded. 3. Erratic clutch operation. 4. Grabbing clutch.	1. Replace broken axle shaft after correcting axle shaft tube alignment. 2. Replace broken axle shaft. Avoid excessive weight on vehicle. 3. Replace broken axle shaft after inspecting for other possible causes. Avoid erratic use of clutch. 4. Replace broken axle shaft. Inspect clutch and make necessary repairs or adjustments.
DIFFERENTIAL CASE CRACKED	1. Improper adjustment of differential bearings. 2. Excessive ring gear backlash. 3. Vehicle overloaded. 4. Erratic clutch operation.	1. Replace cracked case; examine gears and bearings for possible damage. At reassembly, adjust differential bearings properly. 2. Replace cracked case; examine gears and bearings for possible damage. At reassembly, adjust ring gear backlash properly. 3. Replace cracked case; examine gears and bearings for possible damage. Avoid excessive weight on vehicle. 4. Replace cracked case. After inspecting for other possible causes, examine gears and bearings for possible damage. Avoid erratic use of clutch.
DIFFERENTIAL GEARS SCORED	1. Insufficient lubrication. 2. Improper grade of lubricant. 3. Excessive spinning of one wheel/tire.	1. Replace scored gears. Scoring marks on the drive face of gear teeth or in the bore are caused by instantaneous fusing of the mating surfaces. Scored gears should be replaced. Fill rear differential housing to required capacity with proper lubricant. Refer to Specifications. 2. Replace scored gears. Inspect all gears and bearings for possible damage. Clean and refill differential housing to required capacity with proper lubricant. 3. Replace scored gears. Inspect all gears, pinion bores and shaft for damage. Service as necessary.
LOSS OF LUBRICANT	1. Lubricant level too high.	1. Drain excess lubricant by removing fill plug and allow lubricant to level at lower edge of fill plug hole.

SERVICE DIAGNOSIS (CONT'D)

CONDITION	POSSIBLE CAUSES	CORRECTION
LOSS OF LUBRICANT	2. Worn axle shaft seals. 3. Cracked differential housing. 4. Worn drive pinion gear shaft seal. 5. Scored and worn yoke. 6. Axle cover not properly sealed.	2. Replace worn seals. 3. Repair or replace housing as necessary. 4. Replace worn drive pinion gear shaft seal. 5. Replace worn or scored yoke and seal. 6. Remove cover and clean flange and reseal.
AXLE OVERHEATING	1. Lubricant level too low. 2. Incorrect grade of lubricant. 3. Bearings adjusted too tight. 4. Excessive gear wear. 5. Insufficient ring gear backlash.	1. Refill differential housing. 2. Drain, flush and refill with correct amount of the correct lubricant. 3. Readjust bearings. 4. Inspect gears for excessive wear or scoring. Replace as necessary. 5. Readjust ring gear backlash and inspect gears for possible scoring.
GEAR TEETH BROKE (RING GEAR AND PINION)	1. Overloading. 2. Erratic clutch operation. 3. Ice-spotted pavements. 4. Improper adjustments.	1. Replace gears. Examine other gears and bearings for possible damage. 2. Replace gears and examine the remaining parts for possible damage. Avoid erratic clutch operation. 3. Replace gears. Examine the remaining parts for possible damage. Replace parts as required. 4. Replace gears. Examine other parts for possible damage. Ensure ring gear backlash is correct.
AXLE NOISE	1. Insufficient lubricant. 2. Improper ring gear and drive pinion gear adjustment. 3. Unmatched ring gear and drive pinion gear. 4. Worn teeth on ring gear or drive pinion gear. 5. Loose drive pinion gear shaft bearings. 6. Loose differential bearings. 7. Misaligned or sprung ring gear. 8. Loose differential bearing cap bolts	1. Refill axle with correct amount of the proper lubricant. Also inspect for leaks and correct as necessary. 2. Check ring gear and pinion gear teeth contact pattern. 3. Remove unmatched ring gear and drive pinion gear. Replace with matched gear and drive pinion gear set. 4. Check teeth on ring gear and drive pinion gear for correct contact. If necessary, replace with new matched set. 5. Adjust drive pinion gearshaft bearing preload torque. 6. Adjust differential bearing preload torque. 7. Measure ring gear runout. 8. Tighten with specified torque

MODEL 35 AXLE

INDEX

	page
Axle Shaft	16
Axle Shaft Seal and Bearing	17
Backlash and Contact Pattern Analysis	27
Cleaning/Inspection	20
Differential Assembly	21
Differential Disassembly	18
Differential Measurement and Installation	25
Differential Removal	18
Drive Axle Assembly Replacement—XJ Vehicles	14
Drive Axle Assembly Replacement—YJ Vehicles	14
Final Assembly	29
General Information	13
Lubricant Change	13
Lubricant Specifications	13
Pinion Gear Depth Information	21
Pinion Measurement and Assembly	22
Pinion Removal/Disassembly	19
Pinion Shaft Seal Replacement	15

GENERAL INFORMATION

The Model 35 housing has an iron center casting (differential housing) with axle shaft tubes extending from either side. The tubes are pressed into and welded to the differential housing to form a one-piece axle housing.

The integral type housing, hypoid gear design has the centerline of the pinion set below the centerline of the ring gear.

The axle has a vent hose to relieve internal pressure caused by lubricant vaporization and internal expansion.

The axles are equipped with semi-floating axle shafts, meaning that loads are supported by the axle shaft and bearings. The axle shafts are retained by C-clips in the differential side gears.

The cover provides a means for servicing the differential without removing the axle.

Axles may be equipped with drum or disc brakes. The axles that are equipped with ABS brake have a tone ring pressed on the axle shaft. Use care when removing axle shafts as NOT to damage the tone wheel or the sensor.

The Model 35 axle has the assembly part number and gear ratio listed on a tag. The tag is attached to the housing cover. Build date identification codes are stamped on the axle shaft tube cover side.

The differential case is a one-piece design. The differential pinion mate shaft is retained with a threaded roll pin. Differential bearing preload and ring gear backlash is adjusted by the use of spacer shims. Pinion bearing preload is set and maintained by the use of a collapsible spacer.

For complete drive axle assembly removal and installation refer to Drive Axle Assembly Replacement in this Group.

LUBRICANT SPECIFICATIONS

Multi-purpose, hypoid gear lubricant should be used for Model 35 axle. The lubricant should have MIL-L-2105C and API GL 5 quality specifications. MOPAR Hypoid Gear Lubricant conforms to both of these specifications.

- Lubricant for Model 35 axle is a thermally stable SAE 80W-90 gear lubricant.
- Lubricant for Model 35 axle with Trailer Tow is SAE 75W-140 SYNTHETIC gear lubricant.
- Trac-Lok differentials add 4 oz. of friction modifier.
- Lubricant quantity is 1.66 L (3.50 pts.).

Refer to Group 0, Lubrication and Maintenance for additional information.

CAUTION: If axle is submerged in water, lubricant must be replaced immediately to avoid possible premature axle failure.

LUBRICANT CHANGE

The gear lubricant will drain quicker if the vehicle has been recently driven.

(1) Raise and support the vehicle.

(2) Remove the lubricant fill hole plug from the differential housing cover.

(3) Remove the differential housing cover and drain the lubricant from the housing.

(4) Clean the housing cavity with a flushing oil, light engine oil or lint free cloth. **Do not use water, steam, kerosene or gasoline for cleaning.**

(5) Remove the sealant from the housing and cover surfaces.

(6) Apply a bead of MOPAR® Silicone Rubber Sealant to the housing cover (Fig. 1). **Allow the sealant to cure for a few minutes.**

Install the housing cover within 5 minutes after applying the sealant. If not installed the sealant must be removed and another bead applied.

(7) Install the cover and any identification tag. Tighten the cover bolts to 41 N·m (30 ft. lbs.) torque.

(8) Refill differential with Mopar Hypoid Gear Lubricant to bottom of the fill plug hole.

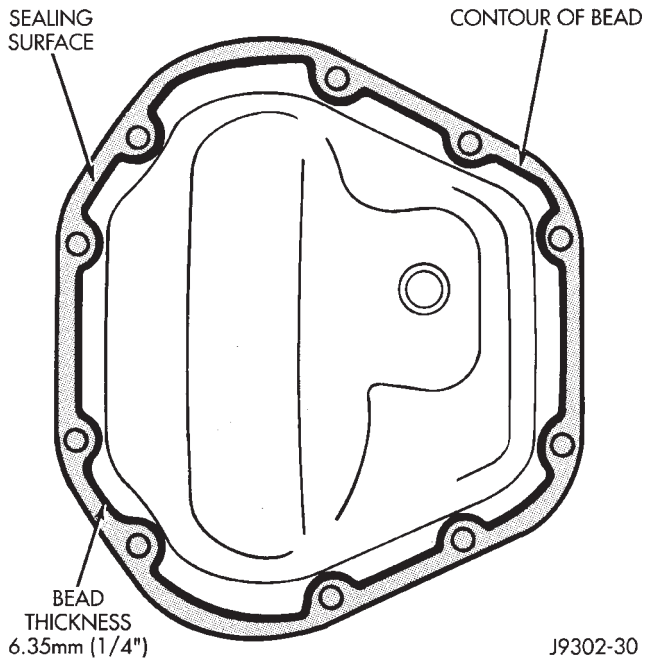

Fig. 1 Typical Housing Cover With Sealant

CAUTION: Overfilling the differential can result in lubricant foaming and overheating.

Trac-Lok Differentials; A container of Trac-Lok lubricant (friction modifier) should be added after repair service or a lubricant change.

(9) Install the fill hole plug and lower the vehicle.

LIMITED SLIP DIFFERENTIAL vehicles should be road tested by making 10 to 12 slow figure-eight turns. This maneuver will pump the lubricant through the clutch discs to eliminate a possible chatter noise complaint.

DRIVE AXLE ASSEMBLY REPLACEMENT—XJ VEHICLES

REMOVAL

(1) Raise the vehicle and position support stands under the frame rails slightly in front the springs.

(2) Remove the rear wheels.

(3) Mark the drive shaft yoke and axle pinion yoke for alignment reference. Disconnect the drive shaft from the axle.

(4) Disconnect the axle vent hose.

(5) Disconnect the parking brake cables at the equalizer or backing plate.

(6) Disconnect the shock absorbers from the axle brackets.

(7) Disconnect the brake hose at the axle junction block. **Do not disconnect the wheel cylinder tubing fittings.**

(8) If equipped, disconnect ABS wiring connections at the axle.

(9) Support the axle with a hydraulic jack under the differential.

(10) Remove the spring U-bolts from the plate brackets.

(11) Lower the jack enough to remove the axle.

INSTALLATION

CAUTION: Suspension components with rubber bushings should be tightened with the vehicle at normal height. It is important to have the springs supporting the weight of the vehicle when the fasteners are torqued. If springs are not at their normal ride position, vehicle ride comfort could be affected and premature bushing wear may occur. Rubber bushings must never be lubricated.

(1) Support the axle on a hydraulic jack under the differential. Position the axle under the vehicle.

(2) Raise the axle and align the spring center bolts with the locating holes in the axle pads and plate brackets.

(3) Install the spring U-bolts through the plate brackets and tighten to 70 N·m (52 ft. lbs.) torque.

(4) Install ABS wiring connections (if equipped) at the axle.

(5) Connect the brake hose at the axle junction block.

(6) Install the shock absorbers to the axle brackets and tighten to 62 N·m (46 ft. lbs.) torque.

(7) Connect the parking brake cables at the equalizer or backing plate.

(8) Connect the vent hose to the tube fitting.

(9) Align the reference marks and connect the drive shaft to the axle yoke. Tighten the U-joint clamp bolts to 19 N·m (14 ft. lbs.) torque.

(10) Check differential lubricant and add if necessary.

(11) Install the wheel and tire.

(12) Bleed the brakes.

(13) Remove the supports and lower the vehicle.

DRIVE AXLE ASSEMBLY REPLACEMENT—YJ VEHICLES

REMOVAL

(1) Raise the vehicle and position support stands under the frame rails slightly in front the springs.

(2) Remove the rear wheels.

(3) Mark the drive shaft yoke and axle pinion yoke for alignment reference. Disconnect the drive shaft from the axle.

(4) Disconnect the axle vent hose.

(5) Disconnect the parking brake cables at the equalizer or backing plate.

(6) Disconnect the shock absorbers from the plate brackets.

(7) Disconnect the brake hose at the axle junction block. **Do not disconnect the wheel cylinder tubing fittings.**

(8) Disconnect the track bar at the axle bracket.

(9) Support the axle with a hydraulic jack under the differential. Raise the axle just enough to relieve the axle weight from the springs.

(10) Remove the spring U-bolts from the plate brackets.

(11) Loosen BUT DO NOT REMOVE the bolts that attach the spring front pivot at the frame rail brackets. This will allow the springs to pivot without binding on the bushings.

(12) Disconnect shackle from the springs and lower the springs to the surface.

(13) Lower the jack enough to remove the axle.

INSTALLATION

CAUTION: Suspension components with rubber bushings should be tightened with the vehicle at normal height. It is important to have the springs supporting the weight of the vehicle when the fasteners are torqued. If springs are not at their normal ride position, vehicle ride comfort could be affected and premature bushing wear may occur. Rubber bushings must never be lubricated.

(1) Support the axle on a hydraulic jack under the differential. Position the axle under the vehicle.

(2) Raise the springs and install the spring shackle bolts. **Do not tighten at this time.**

(3) Lower the axle and align the spring center bolts with the locating holes in the axle pads and plate brackets.

(4) Install the spring U-bolts through the plate brackets and tighten to 122 N·m (90 ft. lbs.) torque.

(5) Connect the track bar to the axle bracket and install the bolt. Do not tighten at this time.

It is important that the springs support the weight of the vehicle when the track bar is connected. If the springs are not at their usual position, vehicle ride comfort could be affected.

(6) Connect the brake hose at the axle junction block.

(7) Install the shock absorbers to the axle brackets and tighten to 61 N·m (45 ft. lbs.) torque.

(8) Connect the parking brake cables at the equalizer or backing plate.

(9) Connect the vent hose to the tube fitting.

(10) Align the reference marks and connect the drive shaft to the axle yoke. Tighten the U-joint clamp bolts to 19 N·m (14 ft. lbs.) torque.

(11) Check differential lubricant and add if necessary.

(12) Install the wheel and tire.

(13) Bleed the brakes.

(14) Remove the supports and lower the vehicle.

(15) Tighten the spring front pivot bolt/nut to 142 N·m (105 ft. lbs.) torque. Tighten the spring shackle bolt/nut to 135 N·m (100 ft. lbs.) torque.

(16) Tighten the track bar bolt at the axle bracket to 142 N·m (105 ft. lbs.) torque.

PINION SHAFT SEAL REPLACEMENT

REMOVAL

(1) Raise and support the vehicle.

(2) Remove wheel and tire assemblies.

(3) Mark the drive shaft yoke and pinion yoke for installation alignment reference.

(4) Remove the drive shaft from the yoke.

(5) Rotate the pinion gear three or four times. **Make sure brakes are not dragging during this procedure.**

(6) Measure the amount of torque (in Newton-meters or inch-pounds) necessary to rotate the pinion gear with a torque wrench. Note the torque for installation reference. **It must be known to properly adjust the pinion gear bearing preload torque after seal installation.**

(7) Remove the pinion yoke nut and washer. Use Remover C-452 and Wrench C-3281 to remove the pinion yoke (Fig. 2).

(8) Mark the positions of the yoke and pinion gear for installation alignment reference.

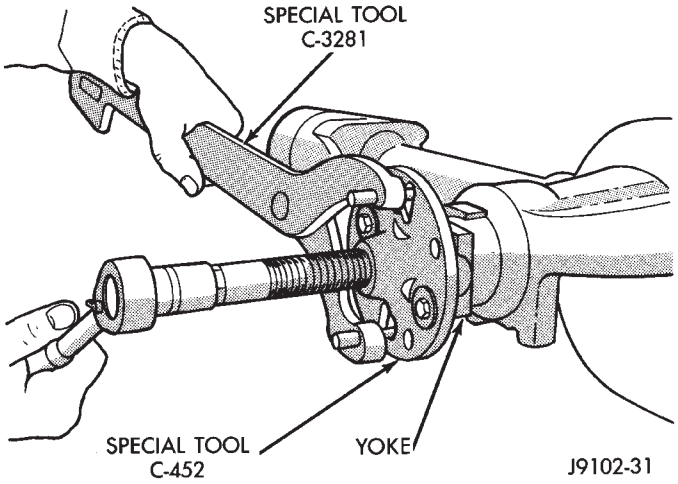

Fig. 2 Pinion Yoke Removal

(9) Use Remover 7794A and slide hammer to remove the pinion gear seal (Fig. 3).

INSTALLATION

(1) Apply a light coating of gear lubricant on the lip of pinion seal. Install seal with Installer D-163 and Handle C-4171 (Fig. 4).

(2) Align the installation reference marks and install yoke on the pinion gear with Installer W-162-D.

(3) Install a new nut on the pinion gear. **Tighten the nut only enough to remove the shaft end play.**

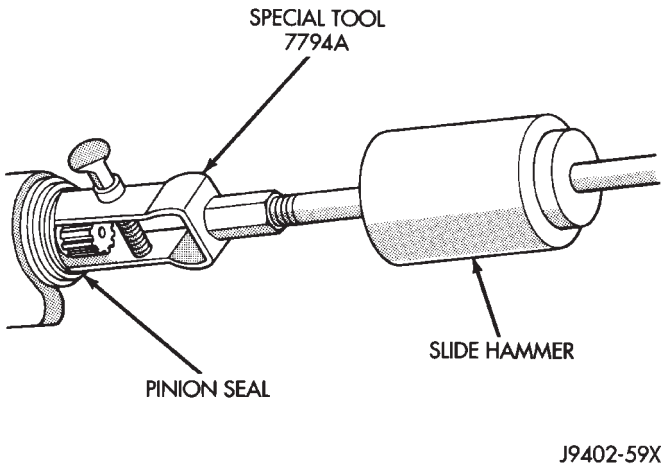

Fig. 3 Seal Removal

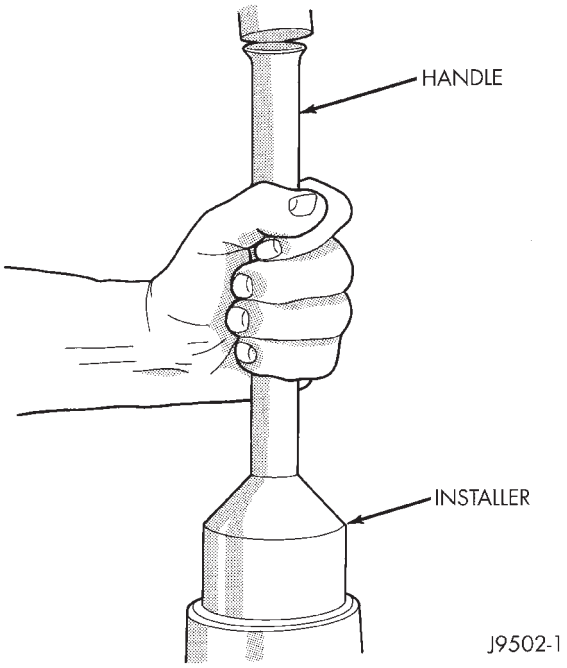

Fig. 4 Pinion Seal Installation

CAUTION: Exercise care during the bearing preload torque adjustment. Do not over-tighten, or loosen and then re-tighten the nut. Do not exceed the bearing preload torque. The collapsible preload spacer on the shaft will have to be replaced. The bearing preload torque will be re-adjusted afterward.

(4) Install a socket and inch-pound torque wrench on the pinion nut.

(5) Rotate the shaft with the torque wrench and note the torque.

The required preload torque is equal to the amount recorded during removal plus an additional 0.56 N·m (5 in. lbs.).

(6) Use Flange Wrench C-3281 to retain the yoke and shaft (Fig. 5). Tighten the shaft nut in very small increments.

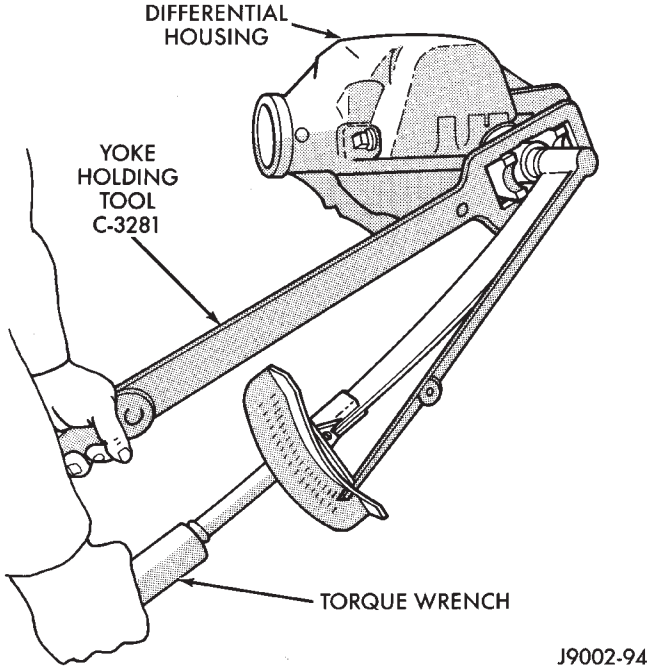

Fig. 5 Tightening Pinion Shaft Nut

(7) Continue tightening the shaft nut in small increments until the correct bearing preload torque is attained.

(8) Align the installation reference marks and attach the drive shaft to the yoke.

(9) Add API grade GL 5 hypoid gear lubricant to the differential housing, if necessary.

(10) Install wheel and tire assemblies.

(10) Lower the vehicle.

AXLE SHAFT

REMOVAL

(1) Raise and support the vehicle.

(2) Remove the wheel and tire.

(3) Remove the brake drum.

(4) Clean all the foreign material from housing cover area.

(5) Loosen the housing cover bolts. Drain the lubricant from the housing and the axle shaft tubes. Remove the housing cover.

(6) Rotate the differential case so that the pinion mate gear shaft lock screw is accessible. Remove the lock screw and the pinion mate gear shaft from the case (Fig. 6).

(7) Force the axle shaft in toward the center of the vehicle. Remove the axle shaft C-clip lock from the axle shaft (Fig. 7).

(8) Remove the axle shaft. Use care to prevent damage to the axle shaft bearing and seal, which will remain in the axle shaft tube.

(9) Inspect axle shaft seal for leakage or damage.

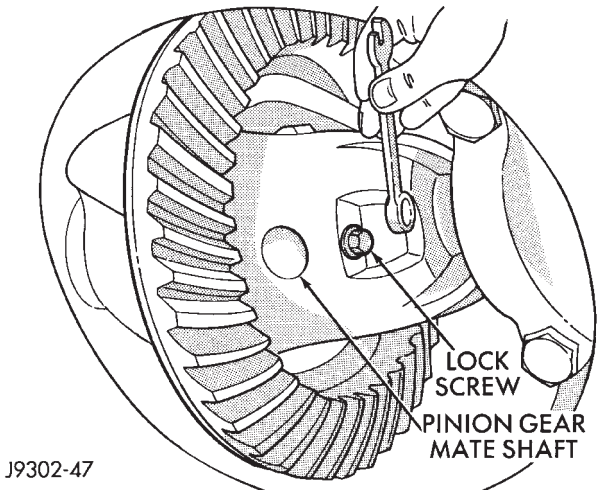

Fig. 6 Mate Shaft Lock Screw

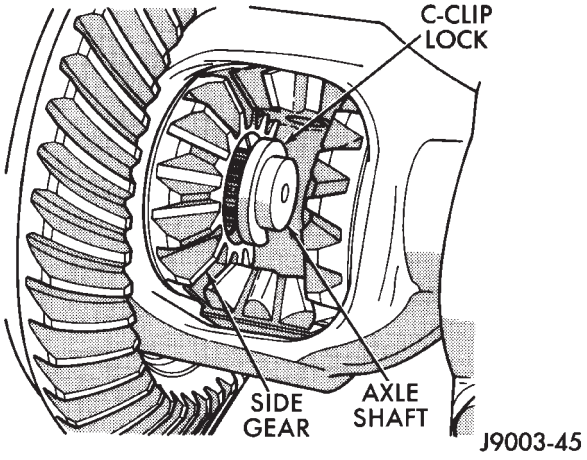

Fig. 7 Axle Shaft C-Clip Lock

(10) Inspect the roller bearing contact surface on the axle shaft for signs of brinelling, spalling and pitting.

(11) If any of these conditions exist, the axle shaft and bearing or seal must be replaced.

INSTALLATION

(1) Lubricate the bearing bore and seal lip with gear lubricant. Insert the axle shaft through the seal, bearing, and engage it with the side gear splines. **Use care to prevent the shaft splines from damaging the axle shaft seal lip.**

(2) Insert the C-clip lock in the end of the axle shaft. Push the axle shaft outward to seat the C-clip lock in the side gear.

(3) Insert the mate shaft into the case and through the thrust washers and pinion gears. Align the hole in shaft with the hole in the differential case and install the lock screw with Loctite® on the threads. Tighten the screw to 19 N·m (14 ft. lbs.) torque.

(4) Install the cover and add fluid. Refer to the Drain and Refill in this section.

AXLE SHAFT SEAL AND BEARING

REMOVAL

(1) Remove the axle shaft. Refer to the Removal procedures in this Group.

(2) Remove the axle shaft seal from the end of the axle shaft tube with a small pry bar.

(3) Remove the bearing if it appears damaged.

The seal and bearing can be removed at the same time with the bearing removal tool.

(4) Remove the axle shaft bearing from the tube (Fig. 8) with Bearing Removal Tool Set 6310 (T.Ar 960-02).

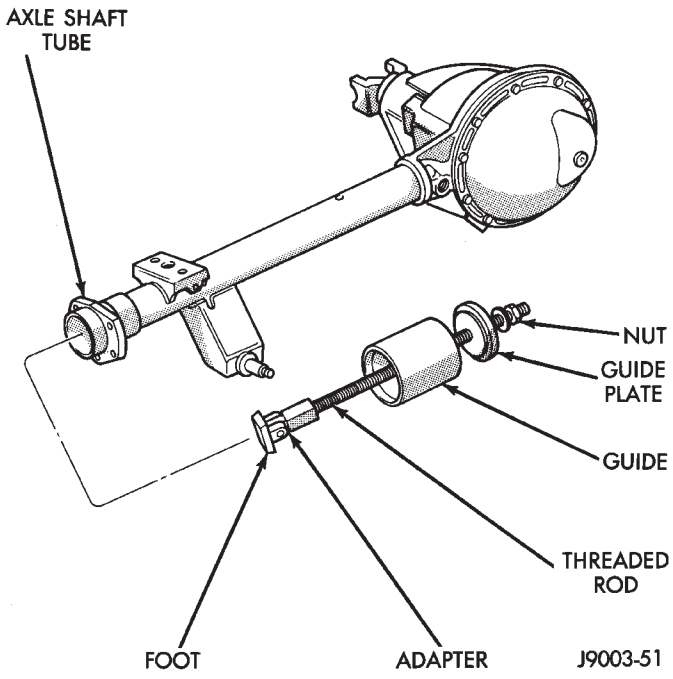

Fig. 8 Axle Shaft Bearing Removal Tool

(5) Inspect the axle shaft tube bore for roughness and burrs. Remove as necessary.

CAUTION: Inspect the housing bore for burrs. Remove them if they exist.

INSTALLATION

Do not install the original axle shaft seal. Always install a new seal.

(1) Wipe the bore in the axle shaft tube clean.

(2) Install axle shaft bearing with Installer 6436 and Handle C-4171. Ensure part number on the bearing must go against the Installer.

(3) Install the new axle shaft seal (Fig. 9) with Installer 6437 and Handle C-4171.

(4) Install the Axle Shaft. Refer to the installation procedure.

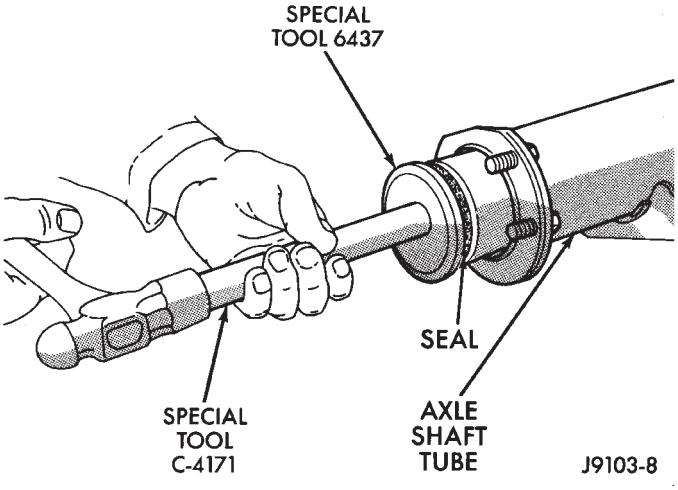

Fig. 9 Axle Shaft Seal Installation

DIFFERENTIAL REMOVAL

To service the differential the axle shafts must be removed. Refer to the removal procedures in this Group.

(1) Note the installation reference letters stamped on the bearing caps and housing machined sealing surface (Fig. 10).

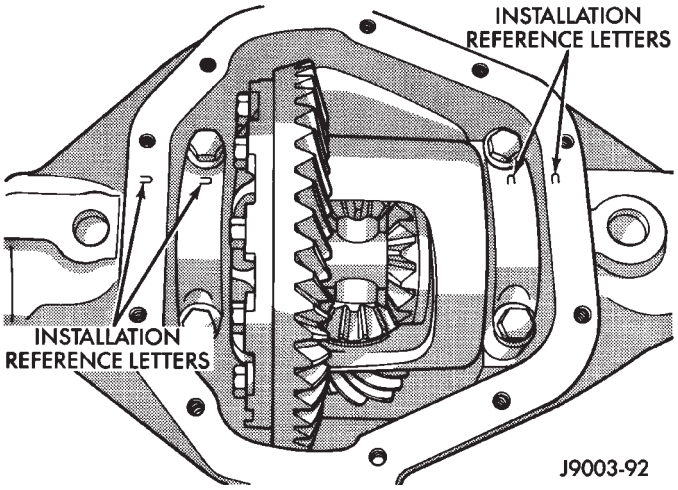

Fig. 10 Bearing Cap Identification

(2) Remove the differential bearing caps.

(3) Position Spreader W-129-B with the tool dowel pins seated in the locating holes (Fig. 11). Install the holddown clamps and tighten the tool turnbuckle finger-tight.

(4) Install a pilot stud at the left side of the differential housing. Attach Dial Indicator to housing pilot stud. Load the indicator plunger against the opposite side of the housing (Fig. 11) and zero the indicator.

CAUTION: Do not spread over 0.38 mm (0.015 in). If the housing is over-separated, it could be distorted or damaged.

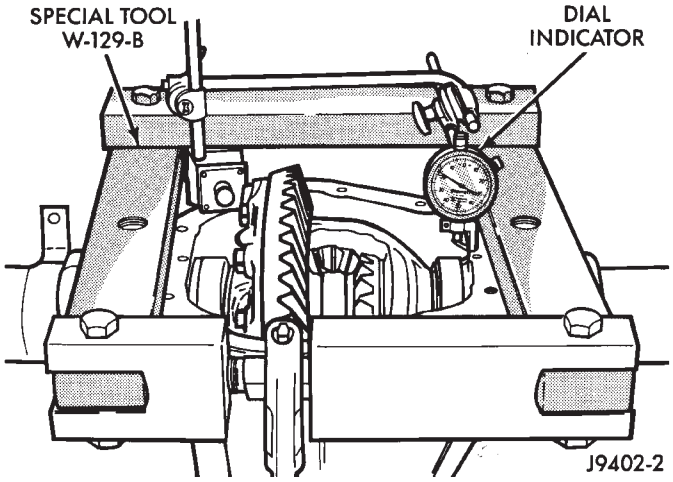

Fig. 11 Spread Differential Housing

(5) Separate the housing enough to remove the case from the housing. Measure the distance with the dial indicator (Fig. 11).

(6) Remove the dial indicator.

(7) Pry the differential case loose from the housing. To prevent damage, pivot on housing with the end of the pry bar against spreader (Fig. 12).

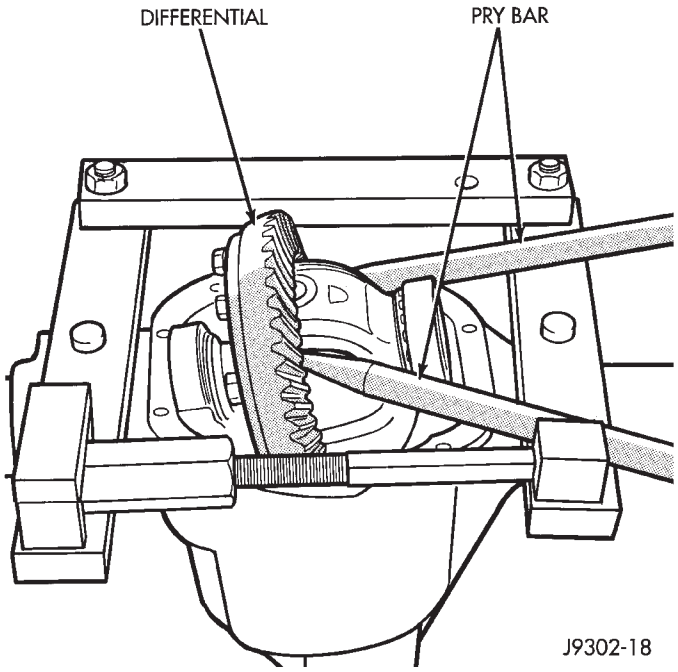

Fig. 12 Differential Removal

(8) Remove the case from housing. Mark or tag bearing cups and outboard shim/spacer (selected thickness) indicating which side they were removed. Remove spreader from housing.

DIFFERENTIAL DISASSEMBLY

(1) Remove the bearings from the differential case with Press C-293-PA, Plug SP3289, Adapter C-293-18 (Fig. 13).

Place adapter rings so they do not damage the bearing cage.

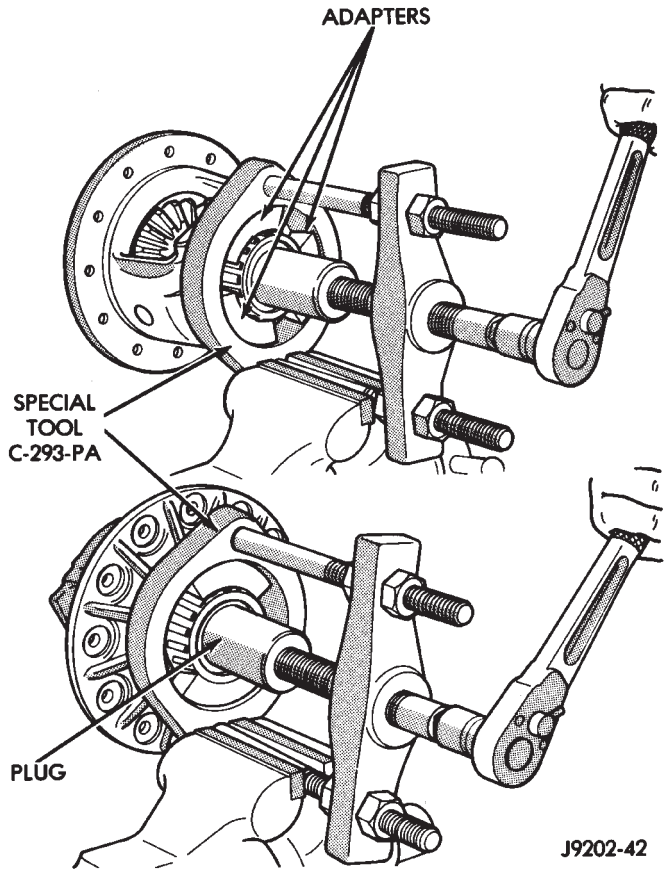

Fig. 13 Differential Bearing Removal

(2) Clamp the differential case in a vise equipped with soft jaws. Remove and discard the ring gear bolts. Tap the ring gear with a rawhide or plastic mallet and remove (Fig. 14).

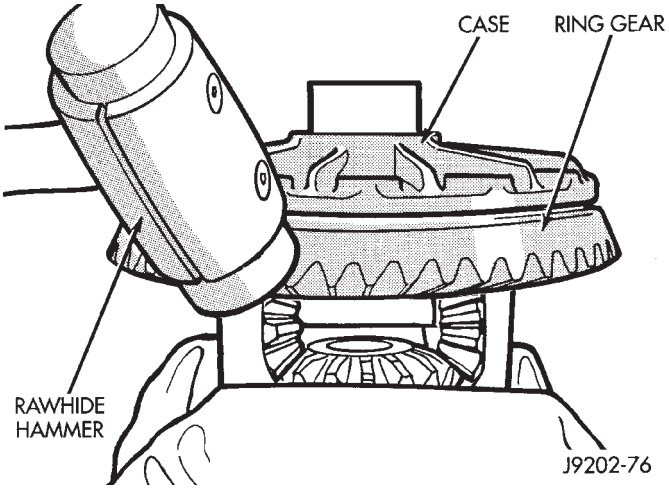

Fig. 14 Ring Gear Removal

(3) Rotate the differential side gears and remove the pinion mate gears and thrust washers (Fig. 15).

(4) Remove the differential side gears and thrust washers.

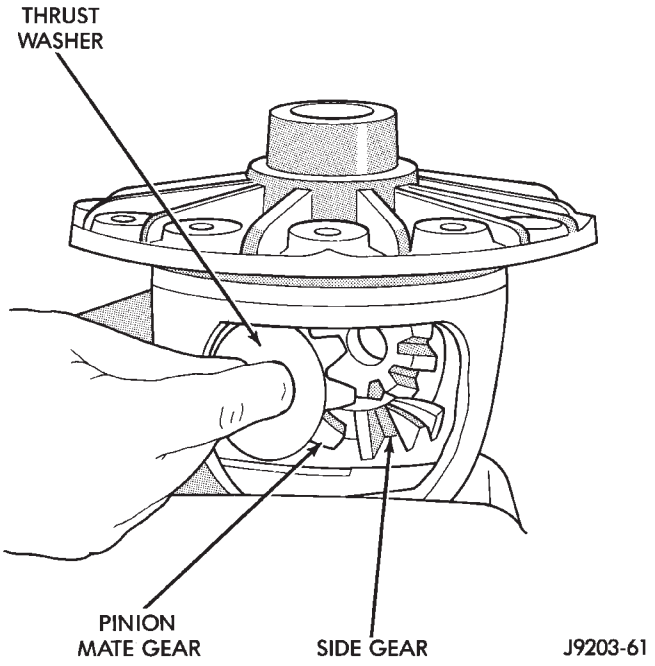

Fig. 15 Pinion Mate Gear Removal

(5) Remove the case from the vise.

PINION REMOVAL/DISASSEMBLY

(1) Remove the pinion yoke nut and washer. Use Remover C-452 and Wrench C-3281 to remove the pinion yoke (Fig. 16).

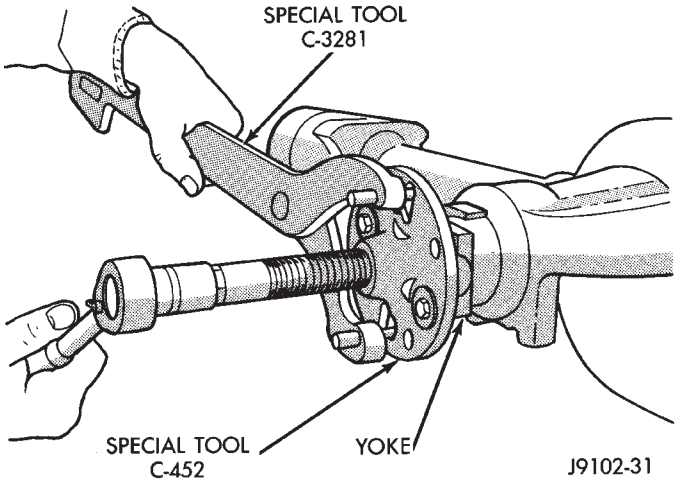

Fig. 16 Pinion Yoke Removal

(2) Remove the pinion gear from housing (Fig. 17). Catch the pinion with your hand to prevent it from falling and being damaged.

(3) Remove the pinion gear seal with a slide hammer or pry out with bar.

(4) Remove oil slinger, front bearing.

(5) Remove the front pinion bearing cup and seal with Remover D-147 and Handle C-4171 (Fig. 18).

(6) Remove the rear bearing cup from housing (Fig. 19). Use Remover D-148 and Handle C-4171.

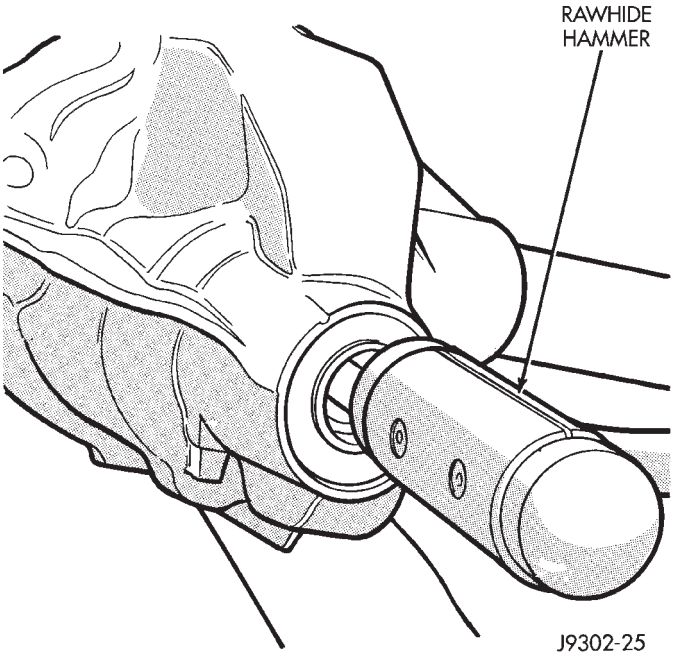

Fig. 17 Remove Pinion Gear

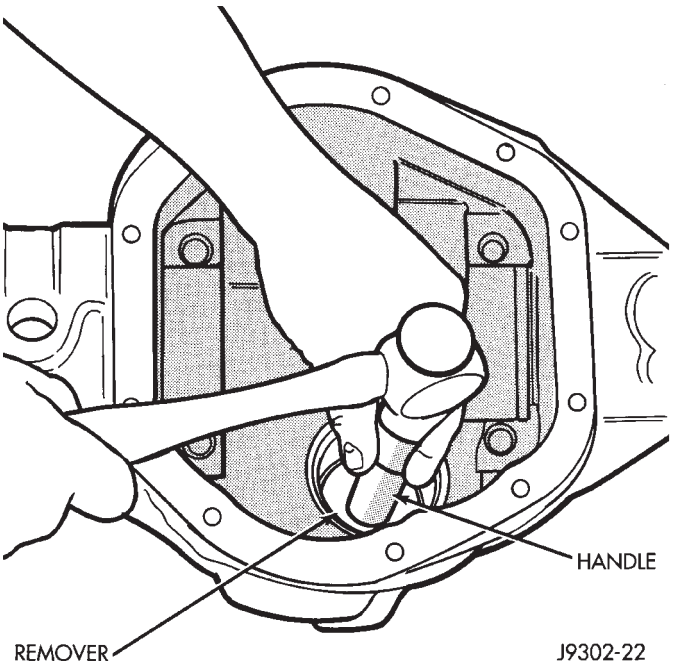

Fig. 18 Front Bearing Cup Removal

(7) Remove the collapsible preload spacer (Fig. 20).

(8) Remove the inner bearing from the pinion with Puller C-293-PA and Adapter C-293-39 (Fig. 21).

Place adapter rings so they do not damage the bearing cage.

(9) Remove the depth shims from the pinion gear shaft. Record the thickness of the depth shims.

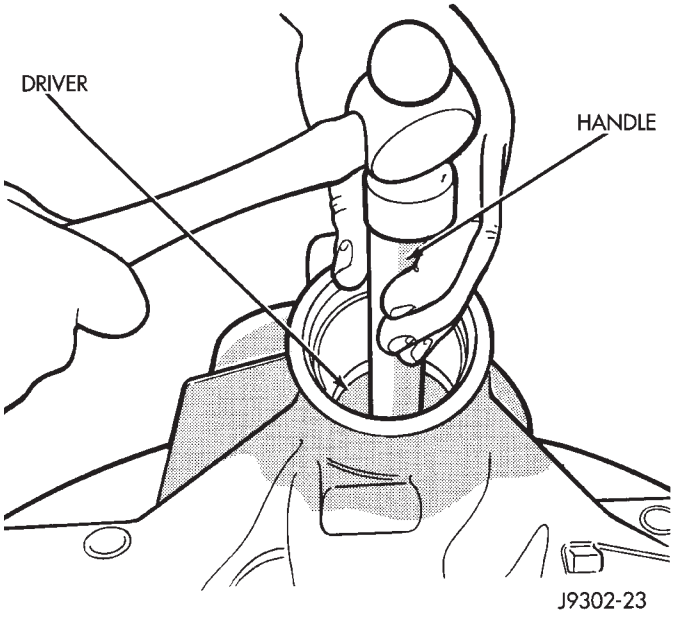

Fig. 19 Rear Bearing Cup Removal

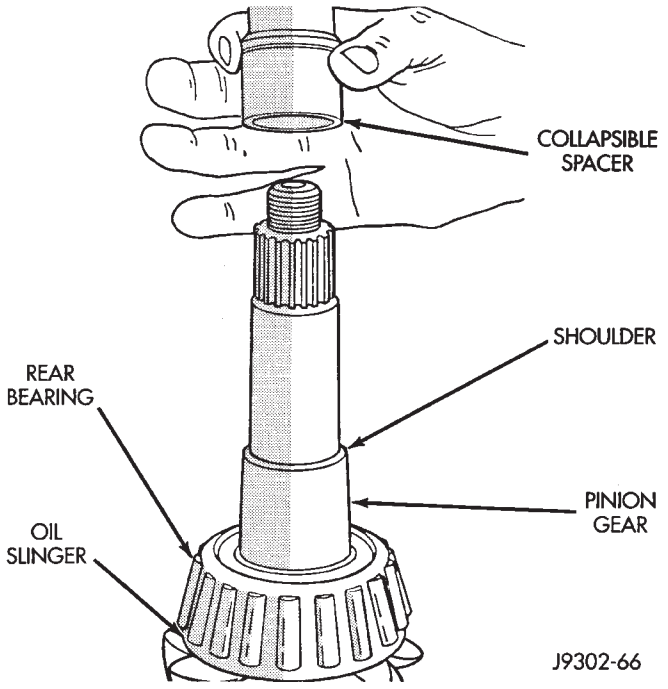

Fig. 20 Collapsible Spacer

CLEANING/INSPECTION

Wash differential components with cleaning solvent and dry with compressed air. **Do not steam clean the differential components.**

Wash bearings with solvent and towel dry, or dry with compressed air. DO NOT spin bearings with compressed air **Cup and bearing must be replaced as a matched sets only.**

Clean axle shaft tubes and oil channels in housing.

Inspect for;

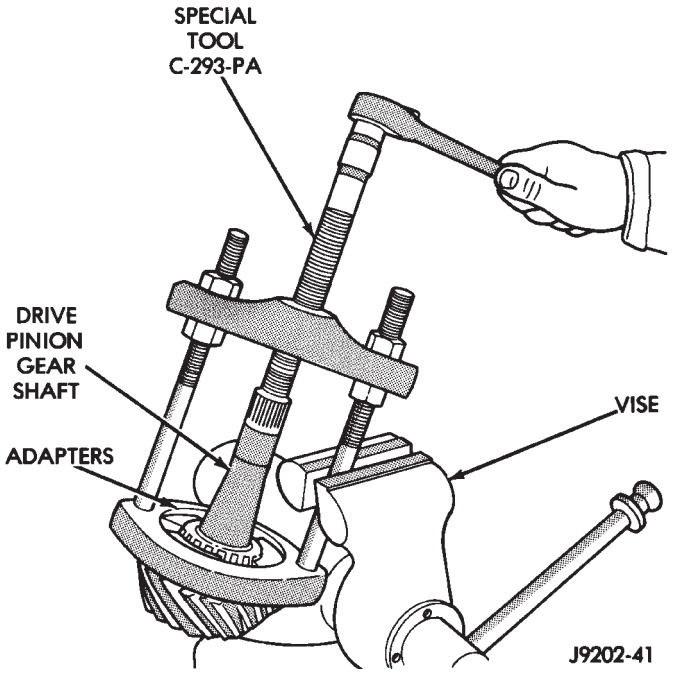

Fig. 21 Inner Bearing Removal

- Smooth appearance with no broken/dented surfaces on the bearing rollers or the roller contact surfaces
- Bearing cups must not be distorted or cracked
- Machined surfaces should be smooth and without any raised edges
- Raised metal on shoulders of cup bores should be removed with a hand stone
- Wear and damage to pinion gear mate shaft, pinion gears, side gears and thrust washers. Replace as a matched set only.
- Ring and pinion gear for worn and chipped teeth
- Ring gear for damaged bolt threads. Replaced as a matched set only.
- Pinion yoke for cracks, worn splines, pitted areas, and a rough/corroded seal contact surface. Repair or replace as necessary.
- Preload shims for damage and distortion. Install new shims if necessary.

DIFFERENTIAL ASSEMBLY

(1) Install the following components in the differential case.
- Differential side gears and thrust washers
- Pinion gears and thrust washers
- Pinion gear mate shaft (align holes in shaft and case)

(2) Lubricate all differential components with hypoid gear lubricant.

PINION GEAR DEPTH INFORMATION

Ring and pinion gears are supplied as matched sets only. The identifying numbers for the ring and pinion gear are etched into the face of each gear (Fig. 22). A plus (+) number, minus (-) number or zero (0) is etched into the face of the pinion gear. This number is the amount (in thousandths of an inch) the depth varies from the standard depth setting of a pinion etched with a (0). The standard setting from the centerline of the ring gear to the back face of the pinion is 96.8 mm (3.813 inches) for Model 35 axles (Fig. 23). The standard depth provides the best teeth contact pattern.

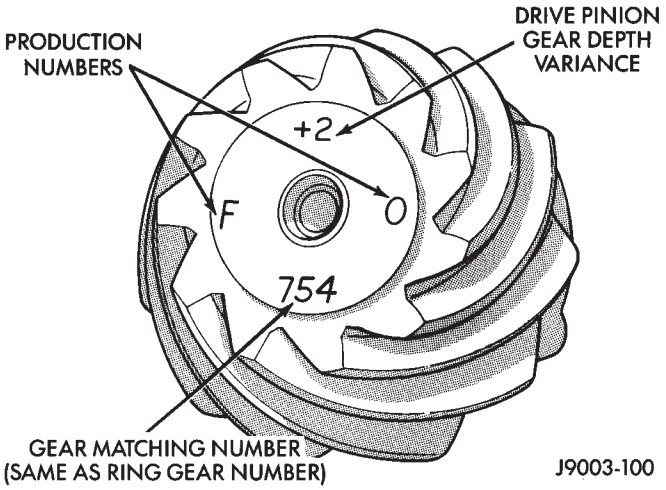

Fig. 22 Pinion Gear ID Numbers

THE BUTTON END ON THE PINION GEAR HEAD IS NO LONGER A MACHINED-TO-SPECIFICATIONS SURFACE. DO NOT USE THIS SURFACE FOR PINION DEPTH SET-UP OR CHECKING (Fig. 23).

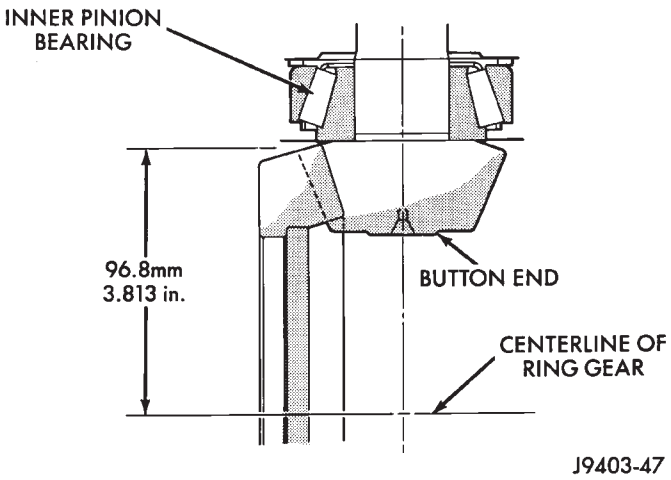

Fig. 23 Pinion Gear Head

Compensation for pinion depth variance is achieved with select shims. In production the shims are placed between the pinion gear and the inner pinion bearing cone. For service the shims are placed under the inner pinion bearing cup (Fig. 24).

If a new gear set is being installed, note the depth variance etched into both the original and replacement pinion gear. Add or subtract the thickness of the original depth shims to compensate for the difference in the depth variances. Refer to the Depth Variance charts.

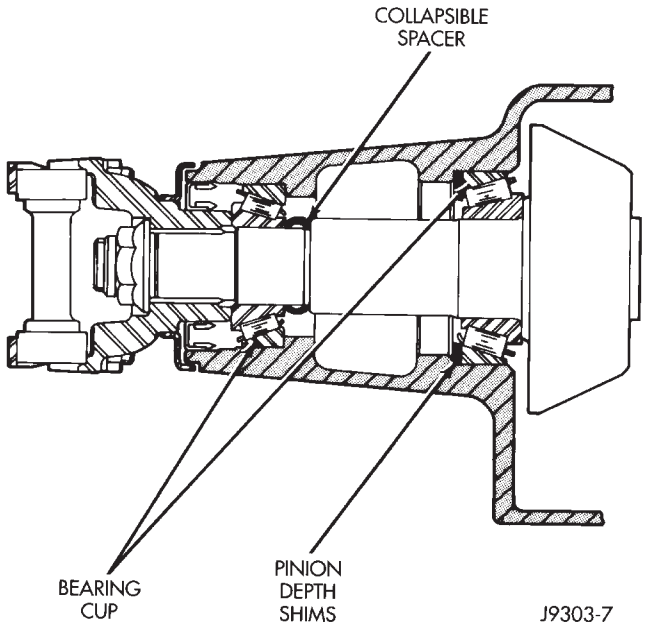

Fig. 24 Shim Locations

Note where Old and New Pinion Marking columns intersect. Intersecting figure represents plus or minus amount needed.

For example, if old pinion is plus (+) 1 and the new pinion is minus (-) 3, intersecting figure is (+)0.004 inch (0.10mm). Add this amount to the original shim. Or if the old pinion is (-) 3 and the new pinion is (-) 2, intersecting figure is (-)0.001 inch (0.025mm). Subtract this amount from original shim. Refer to the Pinion Gear Depth Variance Chart.

PINION MEASUREMENT AND ASSEMBLY

PINION GEAR DEPTH MEASUREMENT

Pinion gear depth measurement is necessary when;

- Axle housing or differential case is replaced
- Pinion select shim pack is unknown
- Ring and pinion gears are replaced

Measurements are taken with pinion cups and pinion bearings installed in housing. Take measurements with Pinion Gauge Set 6774, Pinion Block 6735 and Dial Indicator C-3339 (Fig. 25).

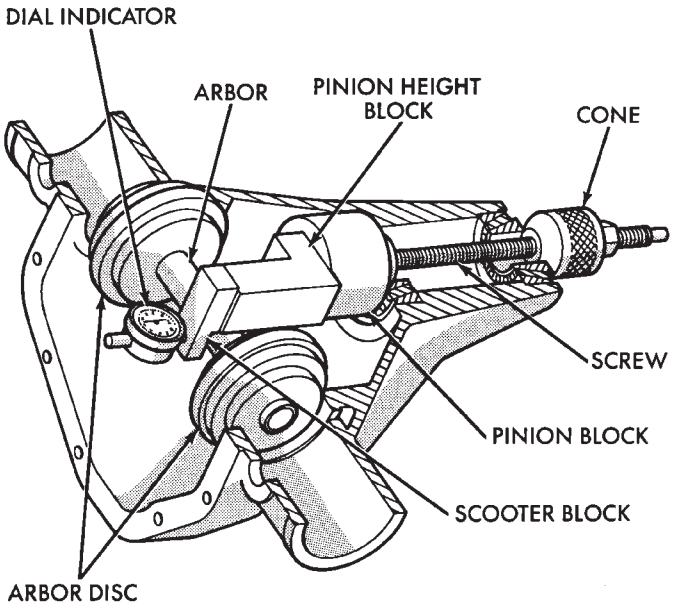

Fig. 25 Pinion Gear Depth Gauge Tools

PINION GEAR DEPTH VARIANCE

Original Pinion Gear Depth Variance	Replacement Pinion Gear Depth Variance								
	−4	**−3**	**−2**	**−1**	**0**	**+1**	**+2**	**+3**	**+4**
+4	+0.008	+0.007	+0.006	+0.005	+0.004	+0.003	+0.002	+0.001	0
+3	+0.007	+0.006	+0.005	+0.004	+0.003	+0.002	+0.001	0	−0.001
+2	+0.006	+0.005	+0.004	+0.003	+0.002	+0.001	0	−0.001	−0.002
+1	+0.005	+0.004	+0.003	+0.002	+0.001	0	−0.001	−0.002	−0.003
0	+0.004	+0.003	+0.002	+0.001	0	−0.001	−0.002	−0.003	−0.004
−1	+0.003	+0.002	+0.001	0	−0.001	−0.002	−0.003	−0.004	−0.005
−2	+0.002	+0.001	0	−0.001	−0.002	−0.003	−0.004	−0.005	−0.006
−3	+0.001	0	−0.001	−0.002	−0.003	−0.004	−0.005	−0.006	−0.007
−4	0	−0.001	−0.002	−0.003	−0.004	−0.005	−0.006	−0.007	−0.008

J8902-46

(1) Assemble Pinion Gauge Set, Pinion Block and pinion bearings. Install assembly into differential pinion gear bore and hand tighten cone (Fig. 26).

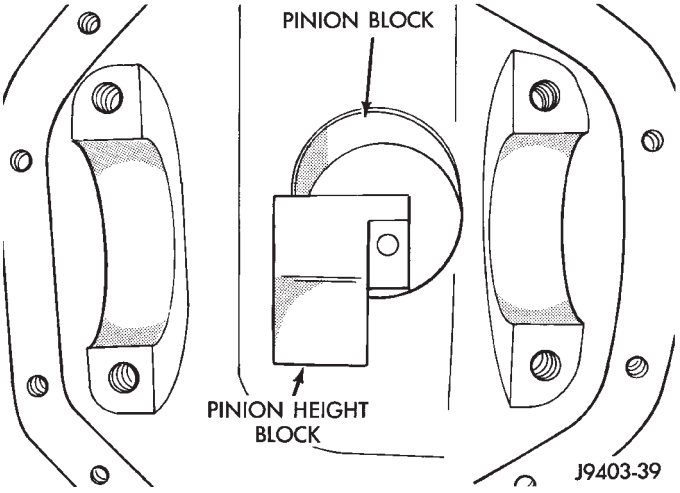

Fig. 26 Pinion Height Block

(2) Place Arbor Disc 6732 on Arbor D-115-3 and position in the bearing cradles (Fig. 27). Install differential bearing caps on Arbor Discs and tighten caps snug only.

Arbor Discs have different steps to fit other axle sizes. Pick correct size step for axle being serviced.

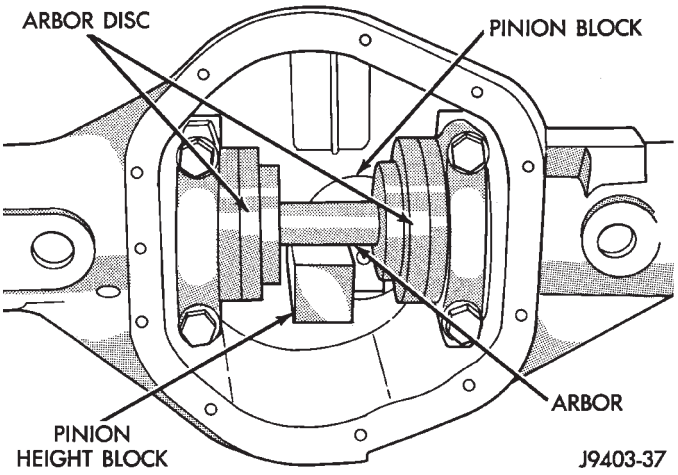

Fig. 27 Gauge Tools In Housing

(3) Firmly place Scooter Block and Dial Indicator on pinion height block tool and zero the dial indicator pointer.

(4) Slide the Scooter Block across the arbor while observing indicator (Fig. 28). Record the longest travel distance, whether inward (-) or outward (+), indicated by the pointer.

The plunger travel distance indicated, plus or minus the variance etched in the gear is the required thickness for the depth shims.

(5) Measure the thickness of each depth shim with a micrometer and combine the shims necessary for total required shim pack thickness. **Include oil slinger or baffle thickness with the total shim pack thickness.**

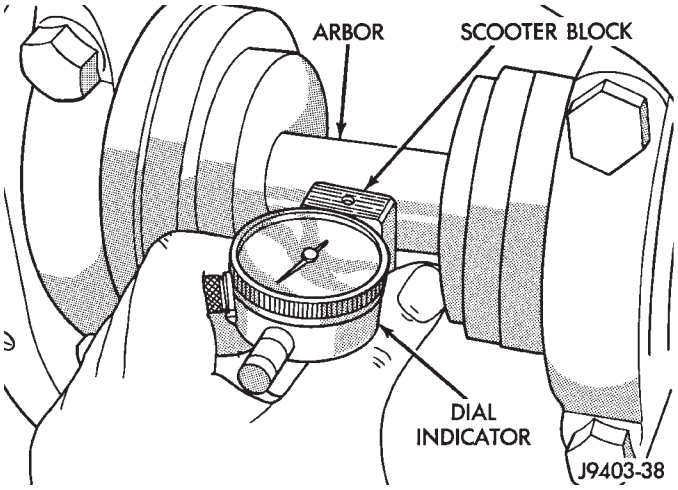

Fig. 28 Pinion Gear Depth Measurement

(6) Remove the measurement tools from the differential housing.

PINION GEAR ASSEMBLY/INSTALLATION

In production depth select shims are placed between the inner pinion bearing cone and pinion gear. For service the select shims are placed under the inner bearing cup.

(1) Place the depth shims (and baffle if equipped) in the pinion gear rear bearing bore. Install the bearing cup with Installer D-146 and Driver Handle C-4171 (Fig. 29). Ensure cup is correctly seated.

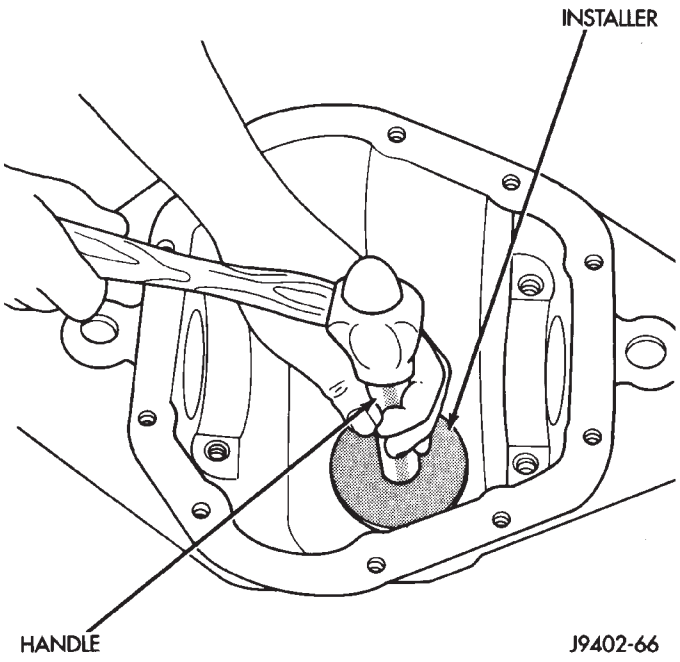

Fig. 29 Pinion Rear Bearing Cup Installation

(2) Install the pinion front bearing cup with Installer D-130 and Handle C-4171 (Fig. 30).

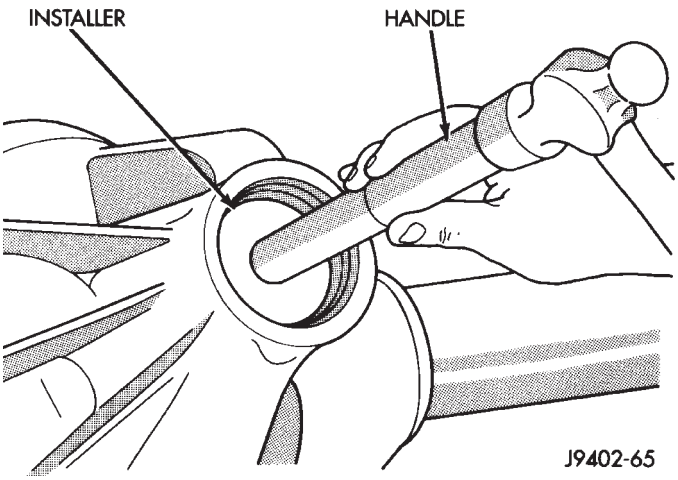

Fig. 30 Pinion Front Bearing Cup Installation

(3) Install pinion front bearing, oil slinger. Apply a light coating of gear lubricant on the lip of pinion seal. Install seal with Installer D-163 and Handle C-4171 (Fig. 31).

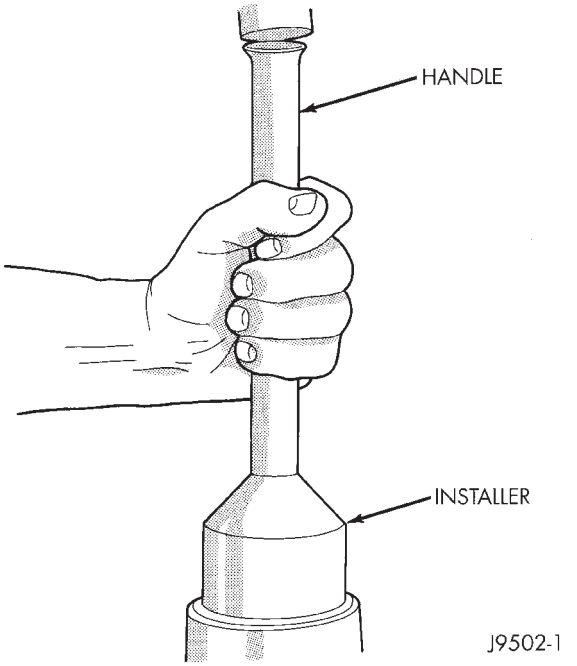

Fig. 31 Pinion Seal Installation

(4) Install the rear bearing (and slinger if used) on the pinion gear with Installer W-262 (Fig. 32).

(5) Install a new collapsible preload spacer on pinion shaft and install pinion gear in housing (Fig. 33).

(6) Install yoke with Installer W-162-D and Wrench C-3281 (Fig. 34).

(7) Install the yoke washer and a new nut on the pinion gear. Tighten the nut to 271 N·m (200 ft.lbs.) minimum. **Do not over-tighten.** Maximum torque is 475 N·m (350 ft. lbs.).

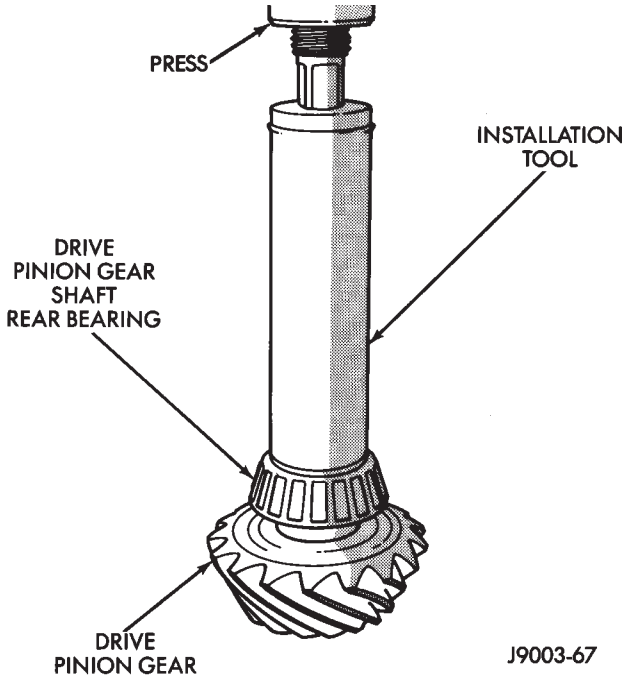

Fig. 32 Shaft Rear Bearing Installation

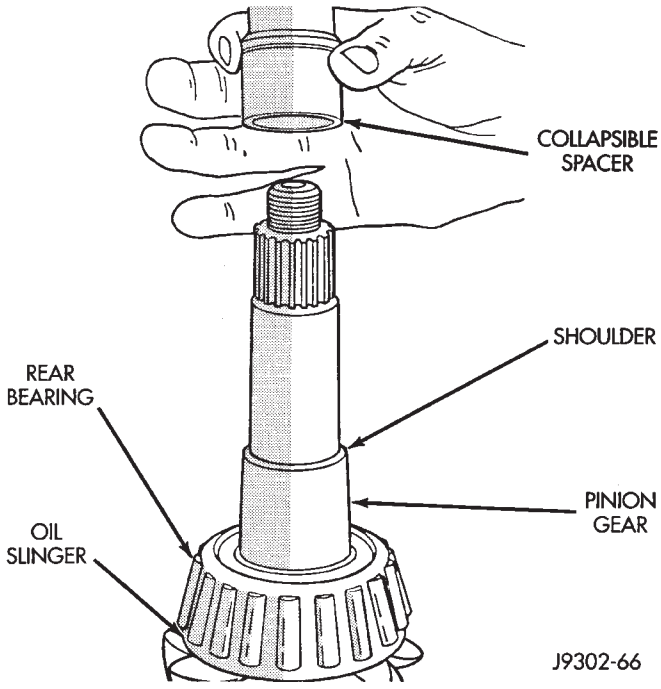

Fig. 33 Collapsible Preload Spacer

CAUTION: Never loosen pinion gear nut to decrease pinion gear bearing preload torque and never exceed specified preload torque. If preload torque is exceeded a new collapsible spacer must be installed. The torque sequence will have to be repeated.

(8) Use Flange Wrench C-3281 to retain the yoke (Fig. 35). Slowly tighten the nut in small increments until the rotating torque is achieved. Measure the preload torque frequently to avoid over-tightening the nut.

(9) Check bearing preload torque with an inch

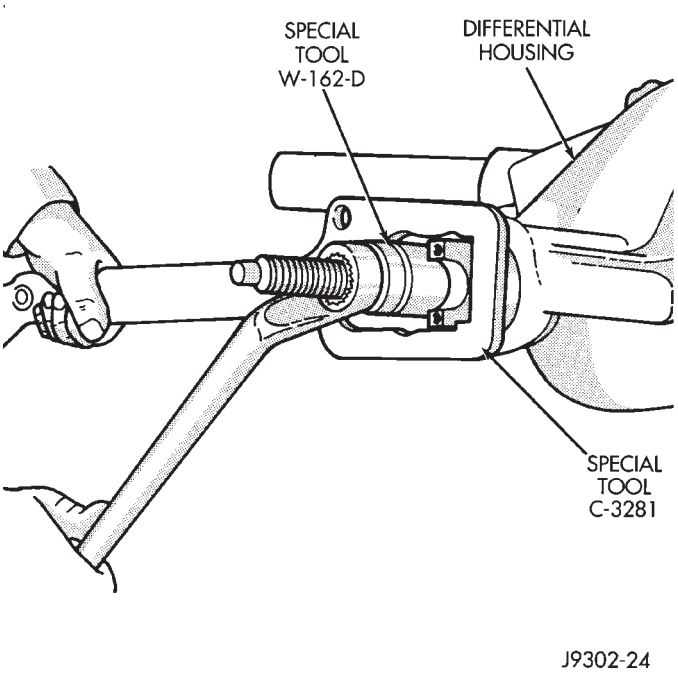

Fig. 34 Pinion Yoke Installation

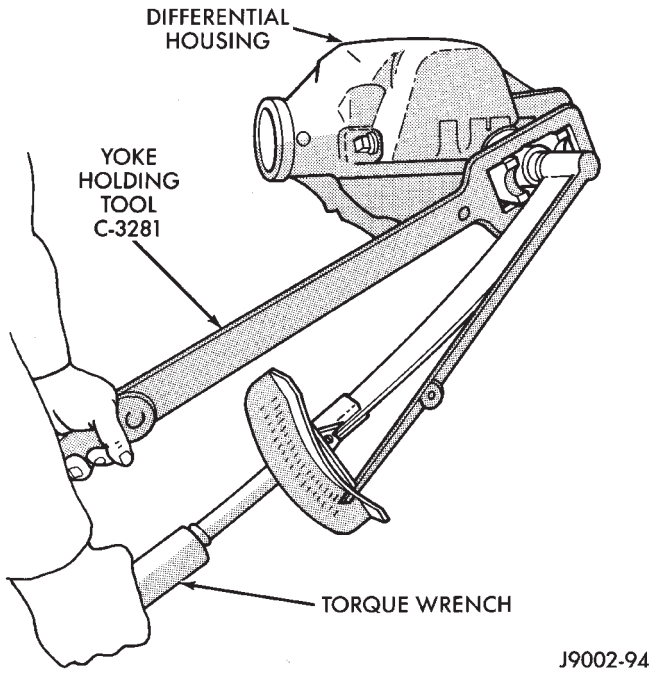

Fig. 35 Tightening Pinion Nut

pound torque wrench (Fig. 36). The torque necessary to rotate the pinion gear should be;

- Original Bearings — 1 to 3 N·m (10 to 20 in. lbs.).
- New Bearings — 2 to 5 N·m (15 to 35 in. lbs.).

DIFFERENTIAL MEASUREMENT AND INSTALLATION

DIFFERENTIAL SHIM PACK MEASUREMENT

(1) Install the bearings on the hub with Installer C-3716A and Driver Handle C-4171.

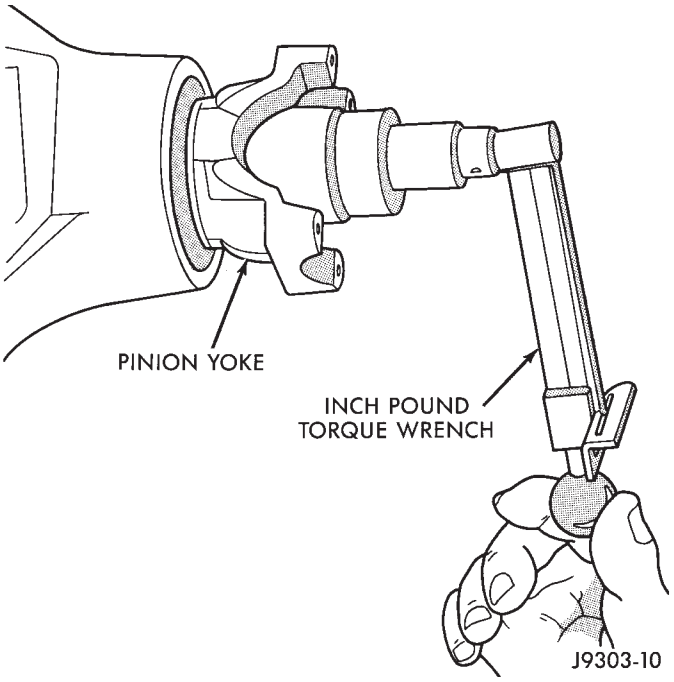

Fig. 36 Check Pinion Gear Torque

(2) Match each bearing cup with bearing (original). Install the cups on the bearings.

Note: It is recommended whenever bearings are removed that they be replaced.

(3) Install the differential case in the housing.

(4) Install the outboard shim/spacer (selected thickness) on each side between bearing cup and housing (Fig. 37). Use 0.142 in. (3.6 mm) as a starting point, shim/spacers are available in various thicknesses.

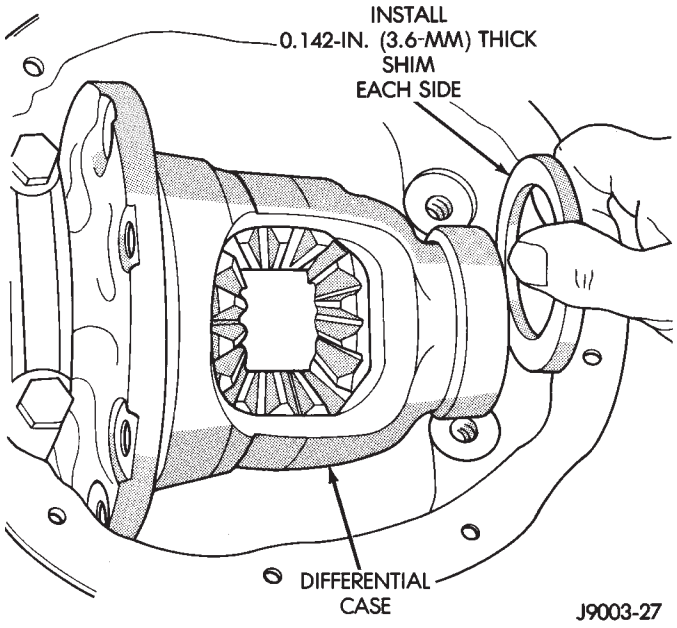

Fig. 37 Differential Bearing Shim Installation

(5) Install the marked bearing caps in their correct positions. Install and snug the bolts.

(6) Attach a dial indicator to the housing. Position the indicator plunger so that it contacts the ring gear mating surface (Fig. 38).

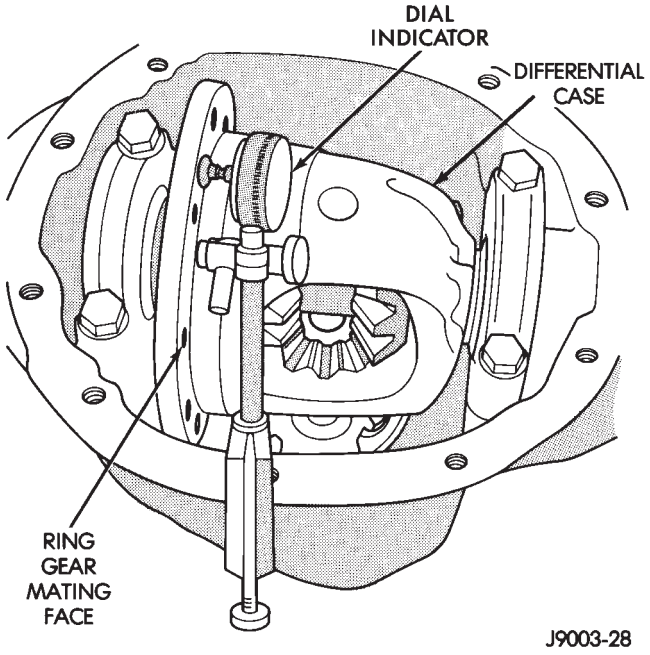

Fig. 38 Shim Measurement

(7) Pry the differential case to one side and zero the dial indicator pointer.

(8) Pry the differential case to the opposite side and record indicator reading. Reading is additional shim thickness needed for zero end play. For example, if reading was 0.008 inch (0.20 mm), an additional 0.004-inch (0.10-mm) thick shim will be needed at each side zero end play.

(9) Install zero end-play shims on each side of case.

The differential bearings must be preloaded to compensate for heat and load during operation.

(10) Add an additional 0.004-inch (0.1-mm) to each outboard shim/spacer for bearing preload.

RING GEAR INSTALLATION

(1) Invert the differential case and start two ring gear bolts. This will provide case-to-ring gear bolt hole alignment.

(2) Install new ring gear bolts and alternately tighten to 95-122 N·m (70-90 ft. lbs.) torque (Fig. 39).

DIFFERENTIAL INSTALLATION

(1) Position Spreader W-129-B with the tool dowel pins seated in the locating holes (Fig. 40). Install the holddown clamps and tighten the tool turnbuckle finger-tight.

(2) Install a pilot stud at the left side of the differential housing. Attach Dial Indicator to housing pilot stud. Load the indicator plunger against the opposite side of the housing (Fig. 40) and zero the indicator.

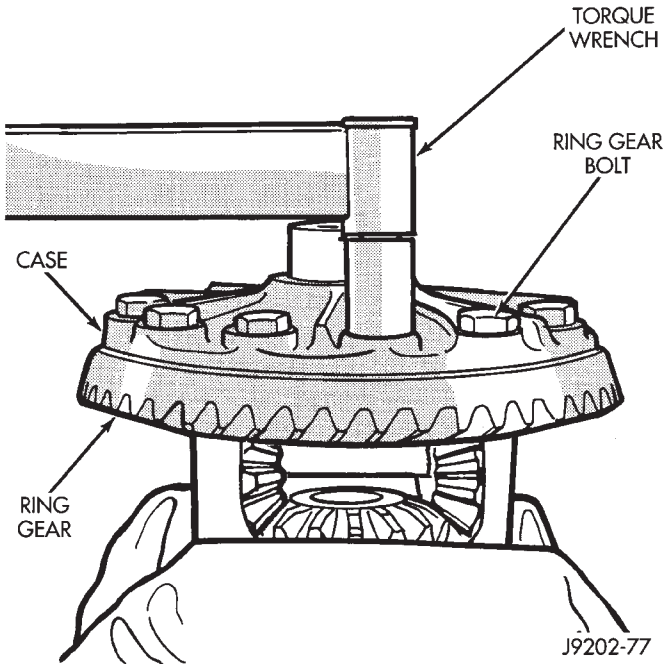

Fig. 39 Ring Gear Bolt Installation

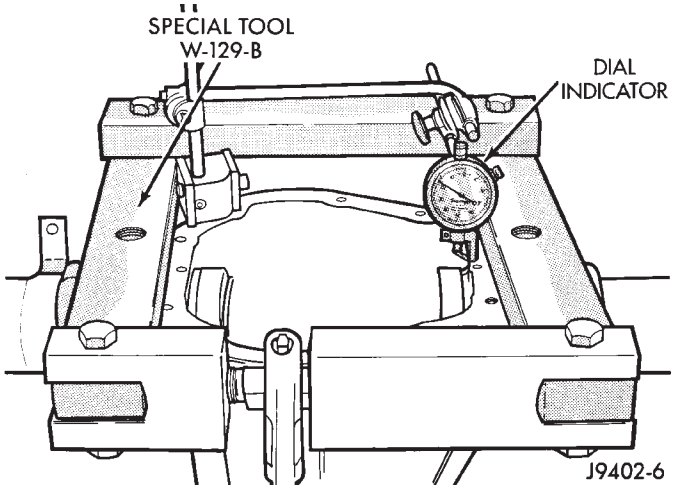

Fig. 40 Spread Differential Housing

CAUTION: Do not spread over 0.38 mm (0.015 in). If the housing is over-separated, it could be distorted or damaged.

(3) Separate the housing enough to install the case in the housing. Measure the distance with the dial indicator (Fig. 40).

(4) Remove the dial indicator.

(5) Install differential and outboard shim/spacer (selected thickness) in housing.

(6) Install case in the housing. Tap the differential case to ensure the bearings are fully seated (Fig. 41). Remove the spreader.

(7) Install the bearing caps at their original locations (Fig. 42). Tighten the bearing cap bolts to 77 N·m (57 ft. lbs.) torque.

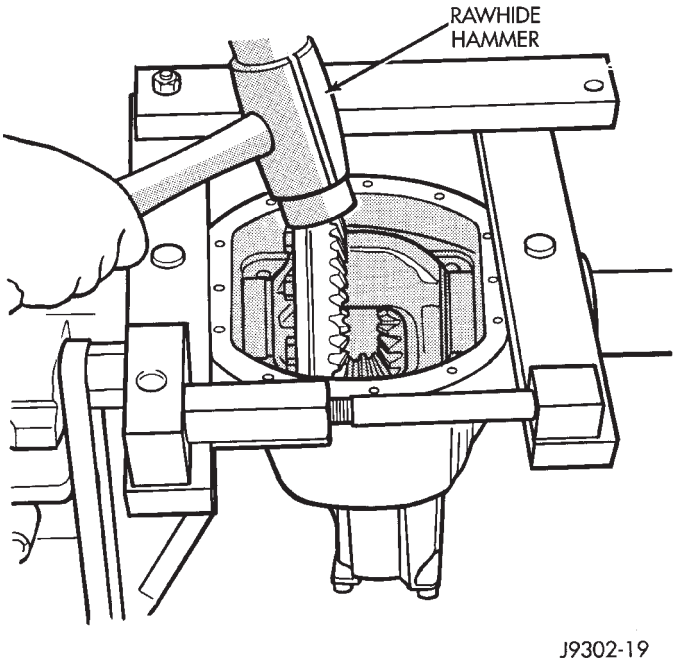

Fig. 41 Differential Installation

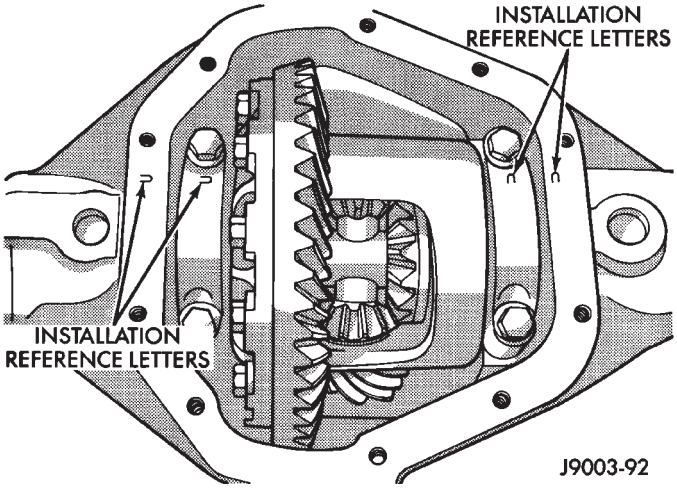

Fig. 42 Differential Bearing Cap Reference Letters

BACKLASH AND CONTACT PATTERN ANALYSIS

(1) Rotate assembly several revolutions to seat bearings. Measure backlash at three equally spaced locations around the perimeter of the ring gear with a dial indicator (Fig. 43).

The ring gear backlash must be within 0.12 - 0.20 mm (0.005 - 0.008 inch). It cannot vary more than 0.05 mm (0.002 inch) between the points checked.

If backlash must be adjusted, spacers are available in various thicknesses. Adjust the backlash accordingly (Fig. 44). **DO NOT INCREASE THE TOTAL SHIM PACK THICKNESS, EXCESSIVE BEARING PRELOAD AND DAMAGE WILL OCCUR.**

The ring gear teeth contact patterns will show if the pinion gear depth shim(s) have the correct thickness. It will also show if the ring gear backlash has been adjusted correctly. The backlash must be maintained within the specified limits until the correct tooth contact patterns are obtained.

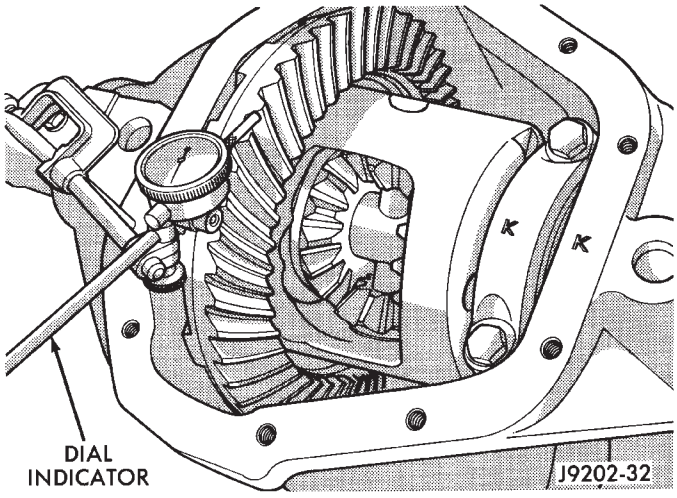

Fig. 43 Ring Gear Backlash Measurement

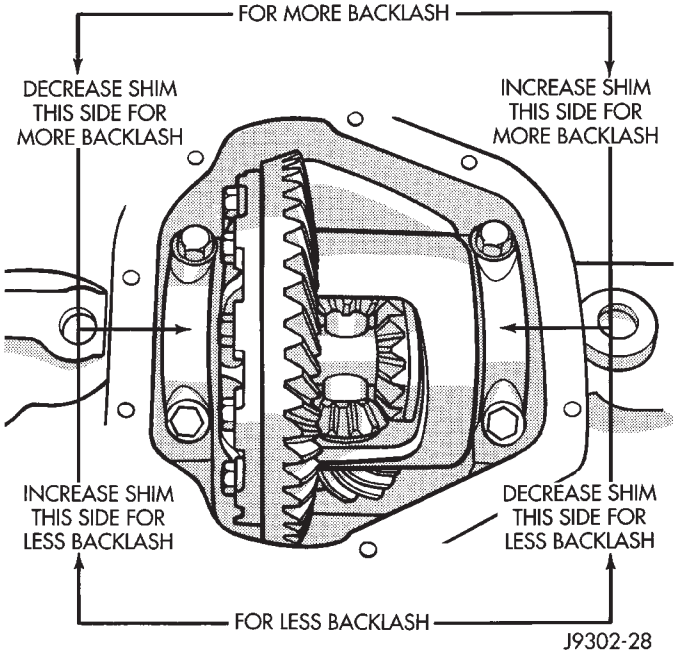

Fig. 44 Backlash Shim Adjustment

(2) Apply a thin coat of hydrated ferric oxide, or equivalent, to the drive and coast side of the ring gear teeth.

(3) Rotate the ring gear one complete revolution in both directions while a load is being applied. Insert a pry bar between the differential housing and the case flange. This will produce distinct contact patterns on both the drive side and coast side of the ring gear teeth.

(4) Note patterns in compound. Refer to (Fig. 45) for interpretation of contact patterns and adjust accordingly.

DRIVE SIDE OF RING GEAR TEETH	COAST SIDE OF RING GEAR TEETH	
HEEL TOE 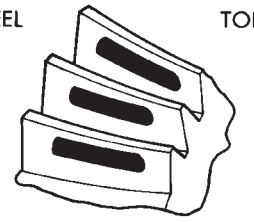	TOE HEEL 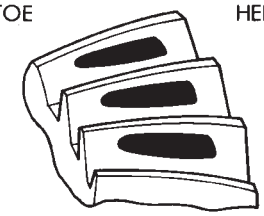	DESIRABLE CONTACT PATTERN. PATTERN SHOULD BE CENTERED ON THE DRIVE SIDE OF TOOTH. PATTERN SHOULD BE CENTERED ON THE COAST SIDE OF TOOTH, BUT MAY BE SLIGHTLY TOWARD THE TOE. THERE SHOULD ALWAYS BE SOME CLEARANCE BETWEEN CONTACT PATTERN AND TOP OF THE TOOTH.
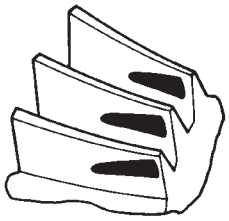	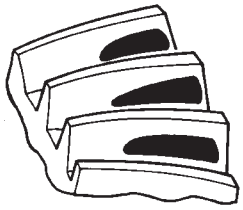	RING GEAR BACKLASH CORRECT. **THINNER** PINION GEAR DEPTH SHIM REQUIRED.
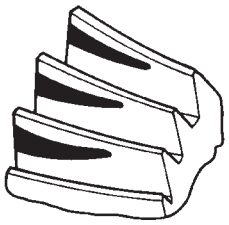	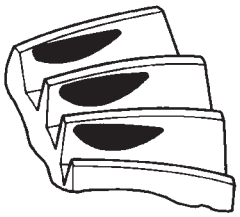	RING GEAR BACKLASH CORRECT. **THICKER** PINION GEAR DEPTH SHIM REQUIRED.
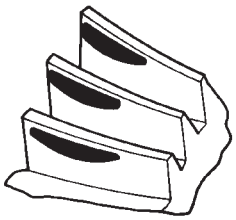	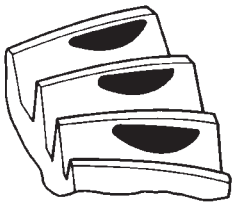	PINION GEAR DEPTH SHIM CORRECT. **DECREASE** RING GEAR BACKLASH.
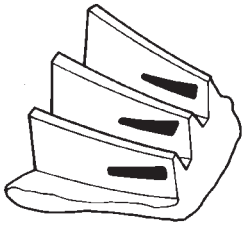	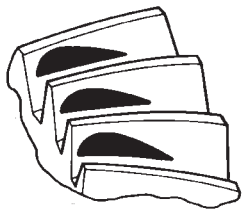	PINION GEAR DEPTH SHIM CORRECT. **INCREASE** RING GEAR BACKLASH.

J9003-24

Fig. 45 Gear Tooth Contact Patterns

FINAL ASSEMBLY

(1) Install the axle shafts. Refer to Axle Shaft Installation within this group.

(2) Scrape the residual sealant from the housing and cover mating surfaces. Clean the mating surfaces with mineral spirits. Apply a bead of MOPAR® Silicone Rubber Sealant on the housing cover (Fig. 46). Allow the sealant to cure for a few minutes.

Install the housing cover within 5 minutes after applying the sealant. If not installed the sealant must be removed and another bead applied.

(3) Install the cover on the differential with the attaching bolts. Install the identification tag. Tighten the cover bolts to 41 N·m (30 ft. lbs.) torque.

CAUTION: Overfilling the differential can result in lubricant foaming and overheating.

(4) Refill the differential housing with the specified quantity of MOPAR® Hypoid Gear Lubricant.

(5) Install the fill hole plug and tighten to 34 N·m (25 ft. lbs.) torque. Axles equipped with rubber fill plug install plug into cover.

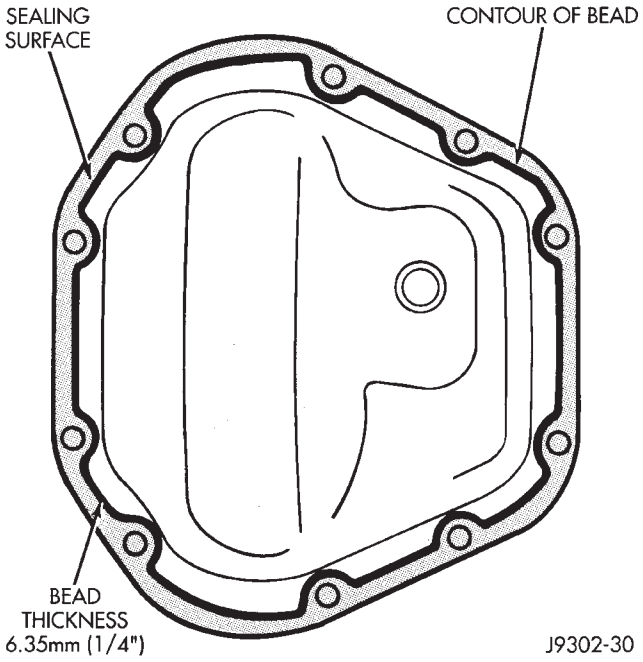

Fig. 46 Typical Housing Cover With Sealant

8 1/4 AXLE

INDEX

	page		page
Axle Shaft, Seal and Bearing Service	32	Lubricant Change	31
Differential Service	34	Lubricant Specifications	31
Drive Axle Assembly Replacement—XJ Vehicles	31	Pinion Seal Replacement	33
Information	30		

INFORMATION

The housing consists of an iron differential housing with axle shaft tubes extending from either side. The tubes are welded to the housing to form a one-piece axle.

The integral type housing, hypoid gear design has the centerline of the pinion set below the centerline of the ring gear.

The axle has a vent used to relieve internal pressure caused by lubricant vaporization and internal expansion.

The axle shafts are retained by C-clips in the differential side gears.

The removable cover provides a means for servicing the differential without removing the axle.

The axles have the gear ratio listed on a tag. The tag is attached to the housing cover.

The differential case is a one-piece design. The differential pinion mate shaft is retained with a threaded roll pin. Preload and backlash is adjusted by the use of threaded adjusters. Pinion bearing preload is set and maintained by the use of a collapsible spacer.

PINION GEAR DEPTH MEASUREMENT WITH GAUGE SET 6575 is used when;

- The axle/differential housing is being replaced
- The original pinion depth shim pack is lost or misplaced
- Replacing the differential case
- Replacing pinion and differential bearings

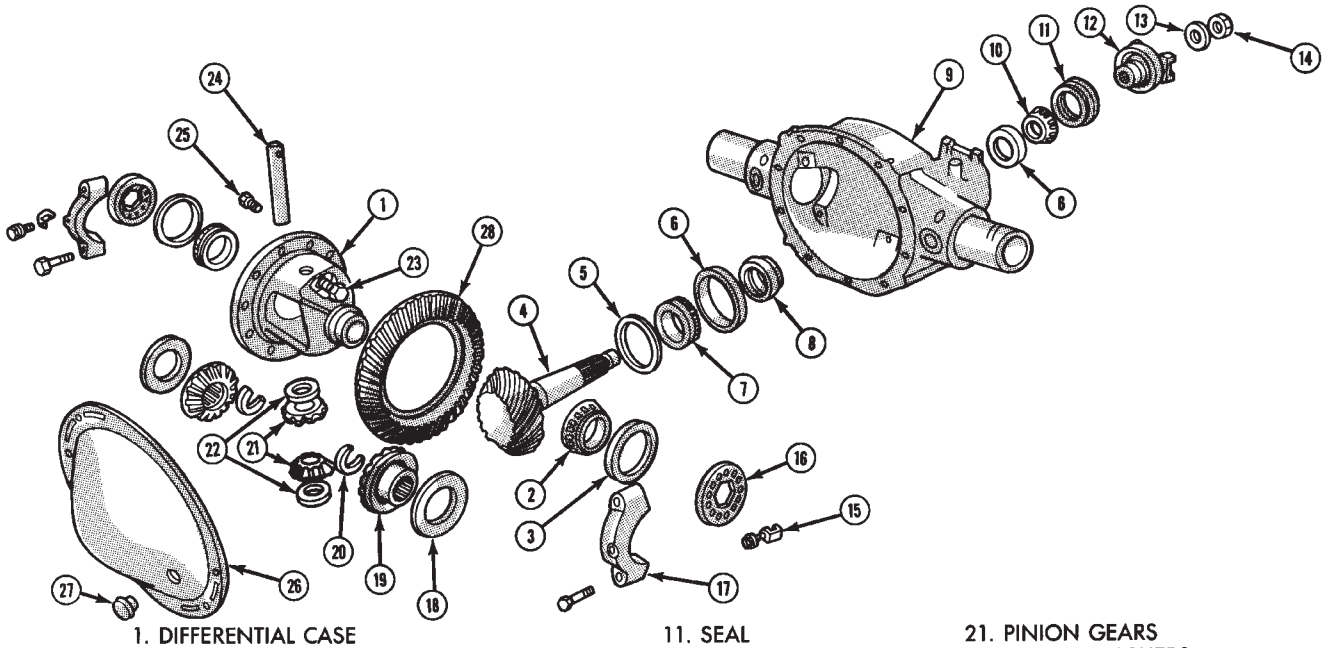

1. DIFFERENTIAL CASE
2. DIFFERENTIAL BEARING
3. BEARING CUP
4. PINION GEAR SHAFT
5. PINION GEAR DEPTH SHIMS
6. BEARING CUP
7. PINION GEAR SHAFT REAR BEARING
8. BEARING PRELOAD COLLAPSIBLE SPACER
9. DIFFERENTIAL HOUSING
10. PINION GEAR SHAFT FRONT BEARING
11. SEAL
12. YOKE
13. WASHER
14. NUT
15. LOCK
16. ADJUSTER
17. BEARING CAP
18. THRUST WASHER
19. SIDE GEAR
20. C-LOCK
21. PINION GEARS
22. THRUST WASHERS
23. SHAFT LOCK BOLT
24. MATE SHAFT
25. RING GEAR BOLT
26. COVER
27. PLUG
28. RING GEAR

J9203-14

Fig. 1 Axle Differential—8 1/4

LUBRICANT SPECIFICATIONS

Multi-purpose, hypoid gear lubricant should be used in the 8 1/4 inch axle. The lubricant should have MIL-L-2105C and API GL 5 quality specifications. MOPAR® Hypoid Gear Lubricant conforms to both of these specifications.

- The factory installed lubricant for the 8 1/4 inch rear axle is SAE 80W 90 gear lubricant.
- The factory installed lubricant quantity is 67±2 fluid oz.

CAUTION: Overfilling the differential can result in lubricant foaming and overheating.

Refer to Group 0, Lubrication and Maintenance for additional information.

CAUTION: If axle is submerged in water, lubricant must be replaced immediately to avoid possible premature axle failure.

DRIVE AXLE ASSEMBLY REPLACEMENT—XJ VEHICLES

REMOVAL

(1) Raise the vehicle. Position support stands under the frame rails slightly in front the springs.
(2) Remove the rear wheels.
(3) Mark the drive shaft yoke and axle pinion yoke for alignment reference. Disconnect the drive shaft from the axle.
(4) Disconnect the axle vent hose.
(5) Disconnect the parking brake cables at the equalizer or backing plate.
(6) Disconnect the shock absorbers from the axle brackets.
(7) Disconnect the brake hose at the axle junction block. **Do not disconnect the wheel cylinder tubing fittings.**
(8) If equipped, disconnect ABS wiring connections at the axle.
(9) Support the axle with a hydraulic jack under the differential.
(10) Remove the spring U-bolts from the plate brackets.
(11) Lower the jack enough to remove the axle.

INSTALLATION

CAUTION: Suspension components with rubber bushings should be tightened with the vehicle at normal height. It is important to have the springs supporting the weight of the vehicle when the fasteners are torqued. If springs are not at their normal ride position, vehicle ride comfort could be affected and premature bushing wear may occur. Rubber bushings must never be lubricated.

(1) Support the axle on a hydraulic jack under the differential. Position the axle under the vehicle.
(2) Raise the axle and align the spring center bolts with the locating holes in the axle pads and plate brackets.
(3) Install the spring U-bolts through the plate brackets and tighten to 70 N·m (52 ft. lbs.) torque.
(4) Install ABS wiring connections (if equipped) at the axle.
(5) Connect the brake hose at the axle junction block.
(6) Install the shock absorbers to the axle brackets and tighten to 62 N·m (46 ft. lbs.) torque.
(7) Connect the parking brake cables at the equalizer or backing plate.
(8) Connect the vent hose to the tube fitting.
(9) Align the reference marks and connect the drive shaft to the axle yoke. Tighten the U-joint clamp bolts to 19 N·m (14 ft. lbs.) torque.
(10) Check differential lubricant and add if necessary.
(11) Install the wheel and tire.
(12) Bleed the brakes.
(13) Remove the supports and lower the vehicle.

LUBRICANT CHANGE

The gear lubricant will drain quicker if the vehicle has been recently driven.
(1) Raise and support the vehicle.
(2) Remove the lubricant fill hole plug from the differential housing cover.
(3) Remove the differential housing cover and drain the lubricant from the housing.
(4) Clean the housing cavity with a flushing oil, light engine oil or lint free cloth. **Do not use water, steam, kerosene or gasoline for cleaning.**
(5) Remove the sealant from the housing and cover surfaces. Use solvent to clean the mating surfaces.
(6) Apply a bead of MOPAR® Silicone Rubber Sealant to the housing cover (Fig. 2). Allow the sealant to cure for a few minutes.

Install the housing cover within 5 minutes after applying the sealant. If not installed the sealant must be removed and another bead applied.

(7) Install the cover and any identification tag. Tighten the cover bolts in a criss-cross pattern to 47 N·m (35 ft. lbs.) torque.
(8) Refill the differential with Mopar Hypoid Gear Lubricant 13 mm (1/2 in.) below the fill plug hole. With Trac-Lok differentials, add a container of Mopar Hypoid Gear Lubricant Additive.

CAUTION: Overfilling the differential can result in lubricant foaming and overheating.

(9) Install the fill hole plug and lower the vehicle.

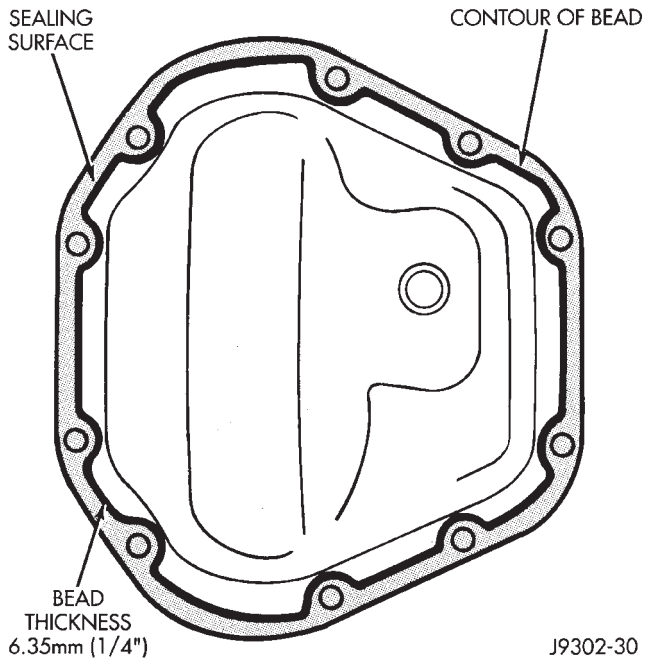

Fig. 2 Typical Housing Cover With Sealant

AXLE SHAFT, SEAL AND BEARING SERVICE

CAUTION: When rear axle service is necessary, both rear wheels must be raised off the surface so that they are free to rotate. Be cautious when the tires are being rotated by the engine or by other means.

AXLE SHAFT REMOVAL

(1) Raise and support the vehicle.
(2) Remove the wheel and tire.
(3) Remove the brake drum.
(4) Clean all the foreign material from housing cover area.
(5) Loosen the housing cover bolts and drain the lubricant from the housing. Remove the housing cover.
(6) Rotate the differential case so that the pinion mate gear shaft lock screw is accessible. Remove the lock screw and the pinion mate gear shaft from the case (Fig. 3).
(7) Push the axle shaft in toward the center of the vehicle. Remove the axle shaft C-clip lock from the axle shaft (Fig. 4).
(8) Remove the axle shaft. Use care to prevent damage to the axle shaft bearing, which will remain in the axle shaft tube.
(9) Inspect the axle shaft bearing contact surface area for indications of brinelling, spalling, and pitting.

If any of these conditions exist, the axle shaft and bearing should be replaced. Normal bearing contact on the shaft will be a dull gray and it could appear to be lightly dented.

(10) If any of these conditions exist, the axle shaft and bearing must be replaced.

The normal appearance (from roller bearing contact) will be a dull gray surface area that could appear slightly dented.

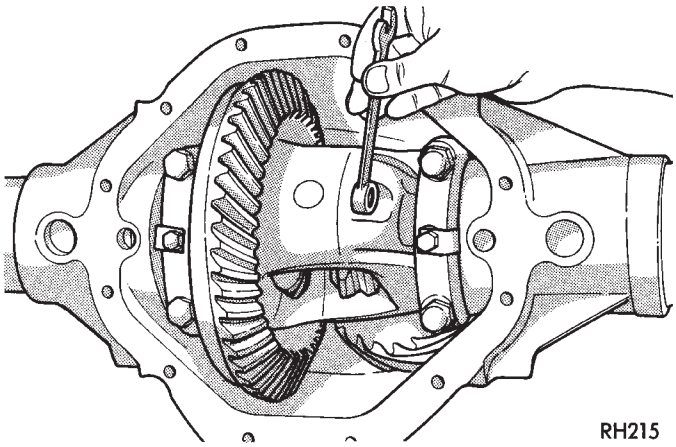

Fig. 3 Pinion Mate Shaft Lock Screw

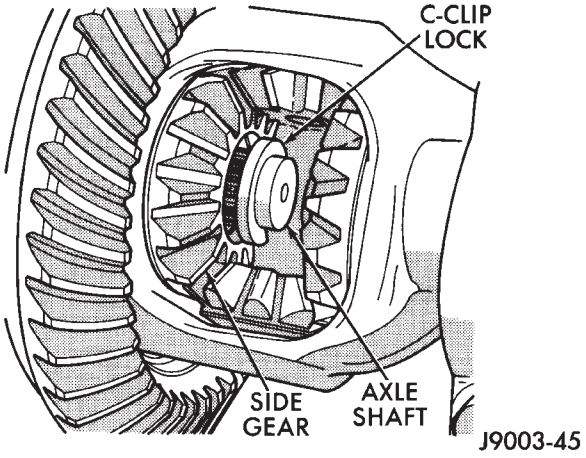

Fig. 4 Axle Shaft C-Clip Lock

AXLE SHAFT SEAL AND BEARING REMOVAL

(1) Remove the axle shaft seal with a small pry bar.
(2) Remove the bearing if it appears damaged or the axle shaft shows any of the conditions described above.
(3) Remove the bearing with Remover C-4167 (Fig. 5). Attach Slide Hammer 7420 and Adapter 7420-8 to the end of the removal tool.
(4) Inspect the axle shaft seal surface and tube bore for roughness and burrs. **Polish each axle shaft with No. 600 crocus cloth. This can remove slight surface damage. Do not reduce the diameter of the axle shaft seal contact surface. When polishing, the crocus cloth should be moved around the circumference of the shaft (not in-line with the shaft).**

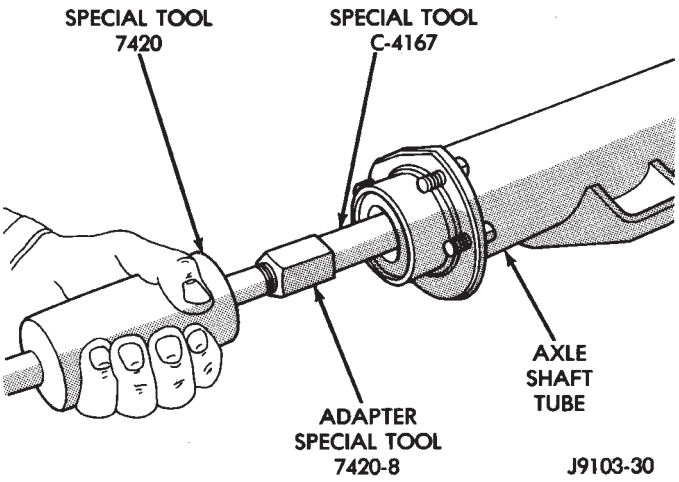

Fig. 5 Axle Shaft Bearing Removal

BEARING AND SEAL INSTALLATION

Do not install the original axle shaft seal. Always install a new seal.

(1) Wipe the bore in the axle shaft tube clean.

(2) If the original bearing is not reusable, install a new bearing. Place the axle shaft bearing on the pilot of Bearing Installer C-4198 and Handle C-4171.

CAUTION: DO NOT use the new axle shaft seal to position or seat the bearing in the axle shaft bore.

(3) Insert the bearing into the tube. Ensure that the bearing is not cocked and is seated firmly against the tube shoulder.

(4) Install the new axle shaft seal (Fig. 6) with Installer C-4198 and Handle C-4171. The flat side of the installation tool must face the seal.

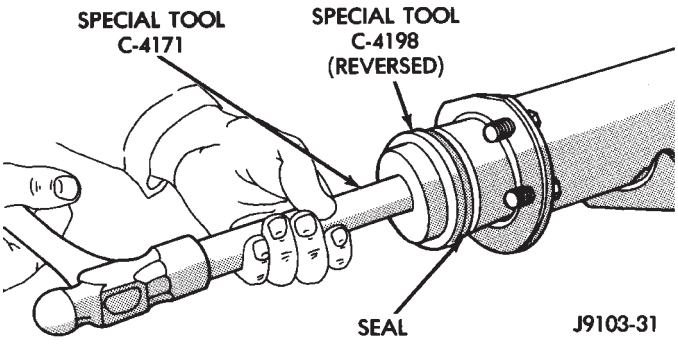

Fig. 6 Axle Shaft Seal Installation

(5) When the tool contacts the end of the tube (face), the seal will be at the correct position and depth.

AXLE SHAFT INSTALLATION

(1) Lubricate the bearing bore and seal lip. Insert the axle shaft and engage the splines with the side gear. Use care to prevent the shaft splines from damaging the axle shaft seal lip.

(2) Insert the C-clip lock in the recessed groove (Fig. 4). Push the axle shaft outward to seat the C-clip lock.

(3) Insert the pinion gear mate shaft in the case. Install through the thrust washers and pinion gears. Align the hole in the shaft with the lock screw hole. Install the lock screw with Loctite® on the threads. Tighten the screw to 11 N·m (8 ft. lbs.) torque (Fig. 3).

(4) Clean the cover and apply a bead of sealant. Refer to the Drain and Refill in this section.

(5) Install the brake drum and wheel and tire.

(6) Raise or lower the hoist until the vehicle is level.

(7) Remove the fill hole plug. Fill the differential housing with lubricant. Refer to the Specifications chart for the type and the quantity. Install the fill hole plug.

(8) Lower the vehicle and test the brakes and axle for correct operation.

PINION SEAL REPLACEMENT

CAUTION: The following procedures must be used so the correct pinion bearing preload torque is retained. If this procedure is not followed completely, it may result in premature failure of the rear axle.

REMOVAL

(1) Raise and support the vehicle.

(2) Mark the U-joint, pinion yoke, and pinion shaft for reference.

(3) Disconnect the drive shaft from the pinion yoke. Secure the drive shaft in an upright position to prevent damage to the rear U-joint.

(4) Remove the rear wheels and brake drums to prevent any drag. The drag can cause a possible false bearing preload torque measurement.

(5) Use a Newton-meter or an inch-pound torque wrench to measure the pinion bearing preload. Rotate the pinion shaft several times with the torque wrench. Note the indicated torque as the wrench is moved through several revolutions.

This measurement is very important because the bearing preload torque must be carefully re-adjusted after the new seal is installed.

(6) Retain the yoke with Wrench C-3281. Remove the pinion shaft nut and Belleville washer.

(7) Make reference marks and remove the yoke with a puller.

(8) Lower the rear of the vehicle to prevent lubricant leakage.

(9) Remove the pinion shaft seal with Puller C-748. Clean the seal contact surface in the housing bore.

INSTALLATION

(1) Examine the splines on the pinion shaft for burrs or wear.

(2) Remove any burrs and clean the shaft.

(3) Inspect the pinion yoke for cracks, worn splines and a worn seal contact surface. Repair or replace the yoke as necessary.

The outer perimeter of the seal is pre-coated with a special sealant. An additional application of sealant is not required.

(4) Install the replacement pinion shaft seal (Fig. 7) with Seal Installer C-4076-A and Handle C-4735-1.

The seal is correctly installed when the seal flange contacts the face of the differential housing flange.

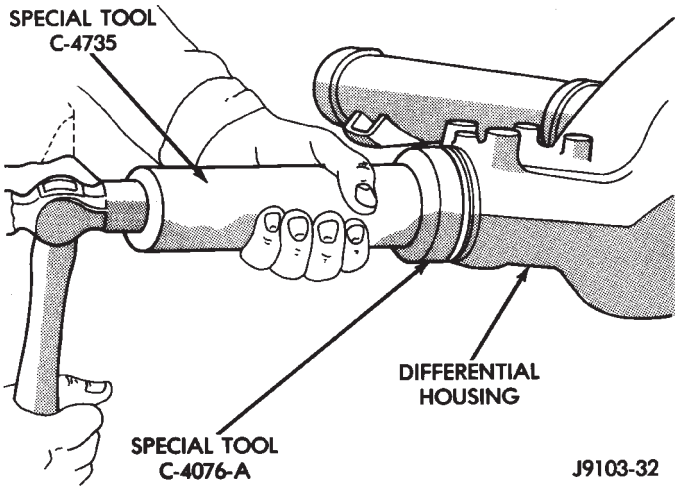

Fig. 7 Pinion Shaft Seal Installation

(5) Position the pinion yoke on the end of the shaft with the reference marks aligned.

(6) Seat the yoke on the pinion shaft with Installer C-3718 and Wrench C-3281.

(7) Remove the tools. Install the Belleville washer. The convex side of the washer must face outward.

(8) Retain the pinion yoke with Wrench C-3281. Tighten the shaft nut to 285 N·m (210 ft. lbs.) torque (Fig. 8). Rotate the pinion shaft several complete revolutions to ensure that the bearing rollers are seated.

Use a Newton-meter or an inch-pound torque wrench to measure the pinion gear bearing preload torque.

CAUTION: Never loosen pinion gear nut to decrease pinion gear bearing preload torque and never exceed specified preload torque. If preload torque is exceeded a new collapsible spacer must be installed. The torque sequence will have to be repeated.

(9) Continue tightening and measuring the bearing preload torque until it is the same as the original.

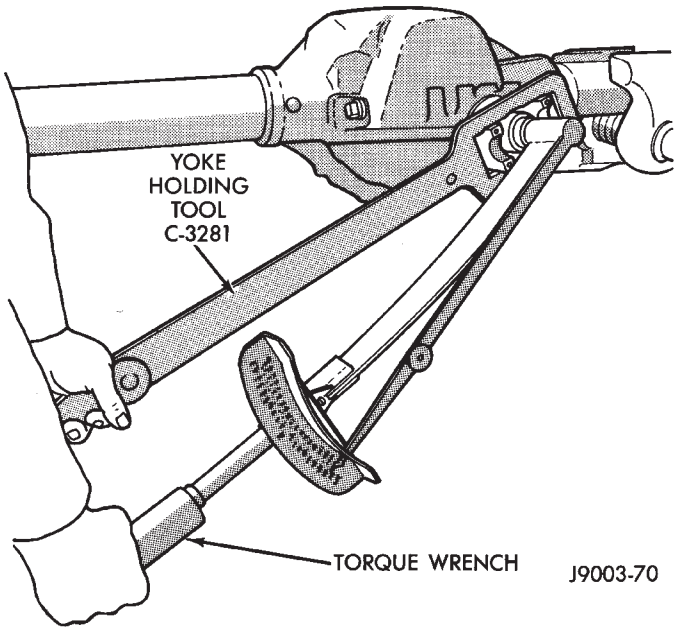

Fig. 8 Tightening Pinion Shaft Nut

The bearing preload torque should never be greater than 1 N·m (10 in. lbs.) more than the recorded value.

The bearing preload torque should be constant during a complete revolution of the pinion gear. If the preload torque varies, this indicates a binding condition. This condition must be corrected before the installation of the drive shaft.

(10) If the specified torque is not obtained, tighten the nut in small increments until the preload torque is obtained.

(11) Seal replacement is unacceptable if final nut torque is less than 285 N·m (210 ft. lbs.) torque.

(12) Install the drive shaft with the installation reference marks aligned. Tighten the U-joint yoke clamp screws to 19 N·m (14 ft. lbs. or 170 in. lbs.) torque.

(13) Install the brake drums, wheels and tires.

(14) Adjust the hoist so that the vehicle is in a level position. Check the differential housing lubricant level. If necessary, add MOPAR® Hypoid Gear Lubricant.

DIFFERENTIAL SERVICE

SERVICE INFORMATION

It is not necessary to remove the complete axle to service the differential.

CAUTION: When differential service is necessary, both rear wheels must be raised off the surface. They must be free to rotate.

CAUTION: Do not subject the bearings, cups, bores or journals to heat from a torch or other abuse. Permanent damage could result. Special tools are available and recommended when servicing axle.

DIFFERENTIAL CASE REMOVAL

(1) Remove the axle shafts, refer to Axle Shaft Removal.

Side play and runout checks taken during disassembly will be very useful in reassembly.

(2) Check differential side play. Position a screwdriver or pinch bar between left side of axle housing and case flange (Fig. 9). Use a prying motion to determine if any side play exists. There should be no side play.

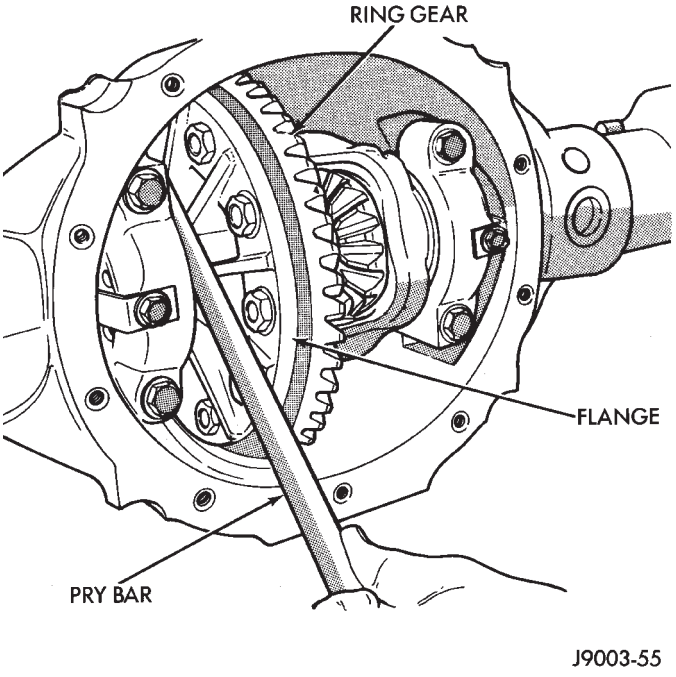

Fig. 9 Differential Case Side Play Test

Side play resulting from bearing races being loose on case hubs require replacement of the differential case. Otherwise, use threaded adjuster to remove the side play before measuring the ring gear runout.

(3) Eliminate any side play in the differential case. Attach Dial Indicator to Pilot stud C-3288-B. Place the indicator plunger at a right angle (90°) to the ring gear (Fig. 10). The plunger should exert a slight force against the gear face.

(4) Measure runout by turning the ring gear several complete revolutions. Observe the dial indicator pointer. Mark the ring gear and the differential case at the areas of maximum runout. The ring gear runout should not exceed 0.13 mm (0.005 inch). If the runout exceeds 0.13 mm (0.005 inch), a damaged differential case could be the cause.

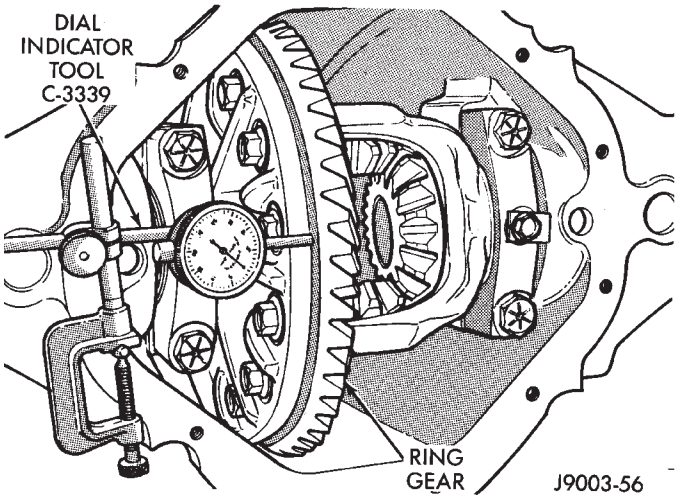

Fig. 10 Ring Gear Runout Measurement

Marking the differential case will be very useful later during differential case runout measurement.

(5) Mark the differential housing and differential bearing caps for installation reference (Fig. 11).

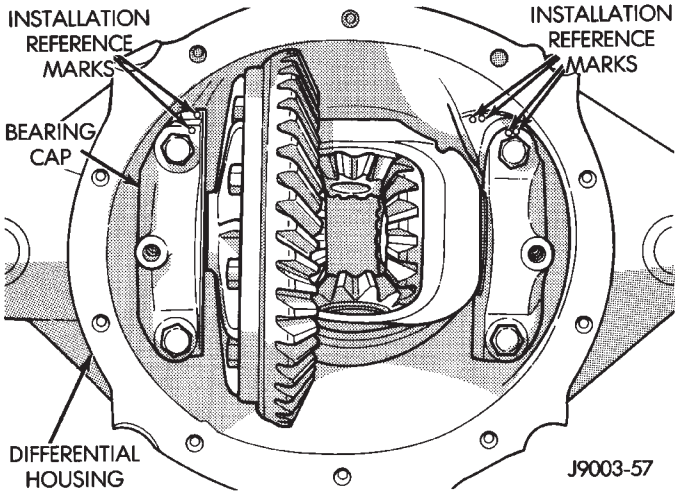

Fig. 11 Housing & Caps Marked For Installation Reference

(6) Remove the bearing threaded adjuster lock from each bearing cap. Loosen the bolts, but do not remove the bearing caps.

(7) Loosen the threaded adjusters with Wrench C-4164 (Fig. 12).

(8) Hold the differential case in place. Remove the bearing caps, adjusters and differential case (Fig. 13).

Each differential bearing cup and threaded adjuster must be kept with their respective bearing.

PINION GEAR SHAFT REMOVAL

(1) Remove the pinion gear nut and washer. Use Puller C-452 and Wrench C-3281 to remove the pinion gear yoke.

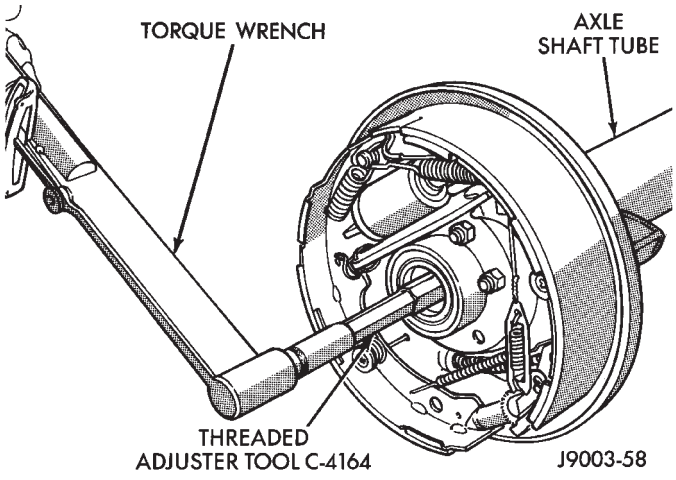

Fig. 12 Threaded Adjuster Tool

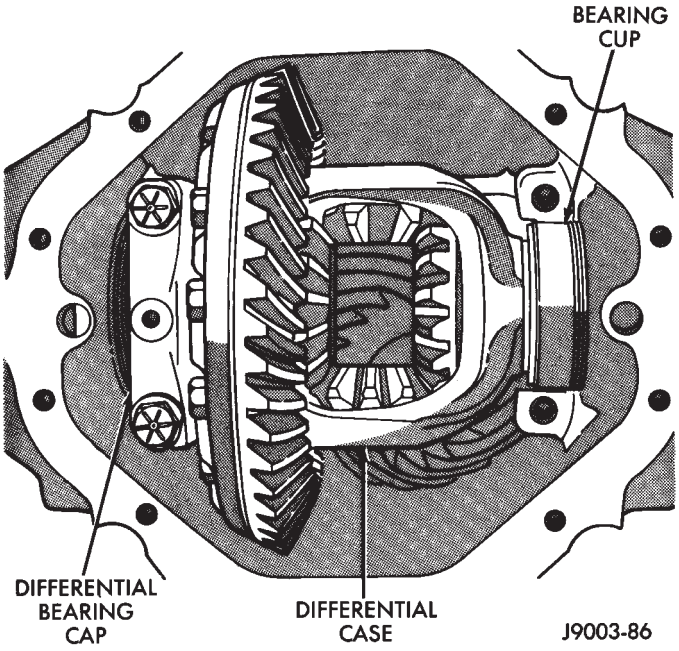

Fig. 13 Differential Bearing Cap Removed

(2) Use Puller C-748 to remove pinion seal and discard seal.

(3) Force pinion gear shaft out the front bearing and remove bearing. **This will damage the front bearing rollers and bearing cup. The front bearing and cup must be replaced.** Discard collapsible spacer.

(4) Remove the front and rear bearing cups.

- Front bearing cup use Remover C-4345 and Handle C-4171
- Rear bearing cup use Remover C-4307 and Handle C-4171

(5) Remove the rear bearing from the pinion shaft with Puller C-293-PA (J-29721) and Adapter C-293-42 (Fig. 14). Remove and record the pinion depth shims.

RING GEAR

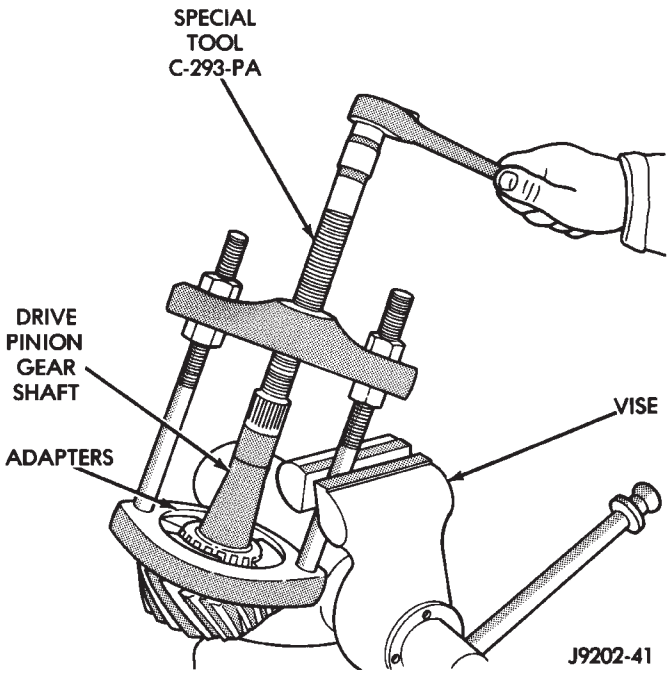

Fig. 14 Inner Bearing Removal

Do not remove the ring gear from case unless the runout must be measured.

(1) Clamp the case with the ring gear bolts facing upward. Use a vise equipped with soft jaws (brass).

(2) Remove and discard **left-hand** threaded ring gear bolts. Use a hammer and a brass drift to force ring gear loose from the case pilots. Remove the ring gear.

CASE FLANGE RUNOUT MEASUREMENT

(1) If the ring gear runout exceeded 0.13 mm (0.005 inch), case flange runout should be measured. Install the case with bearing cups and threaded adjusters close to their original position.

(2) Install the bearing caps and bolts. Tighten the bolts lightly. Use Wrench C-4164 (Fig. 12) to thread both adjusters inward. Remove all side play.

(3) Attach Dial Indicator to measure the flange runout. The plunger should contact the ring squarely between the outer edge and gear attaching bolt holes (Fig. 15).

(4) Rotate the differential case several times. Observe the dial indicator pointer. Mark the area of maximum flange runout. The differential case flange runout must not exceed 0.08 mm (0.003 inch). If runout exceeds this amount replace differential case.

To reduce excessive ring gear runout, position gear runout mark 180 degrees opposite flange runout mark.

(5) Remove differential bearing cap bolts. Remove differential case from differential housing.

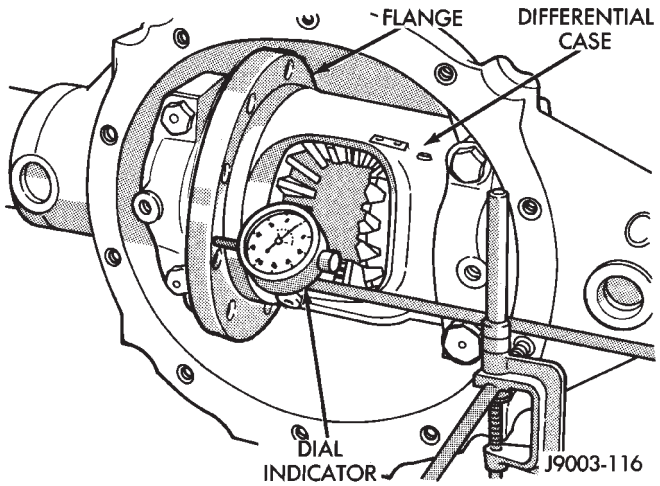

Fig. 15 Case Flange Runout Measurement

DIFFERENTIAL CASE DISASSEMBLY

(1) Rotate side gears until pinion gears are located at the differential case opening. Remove gears.

(2) Remove side gears and thrust washers.

(3) Remove differential bearings from the case hubs with Puller C-293-PA, Adapter C-293-48 and Plug SP-3289 (Fig. 16).

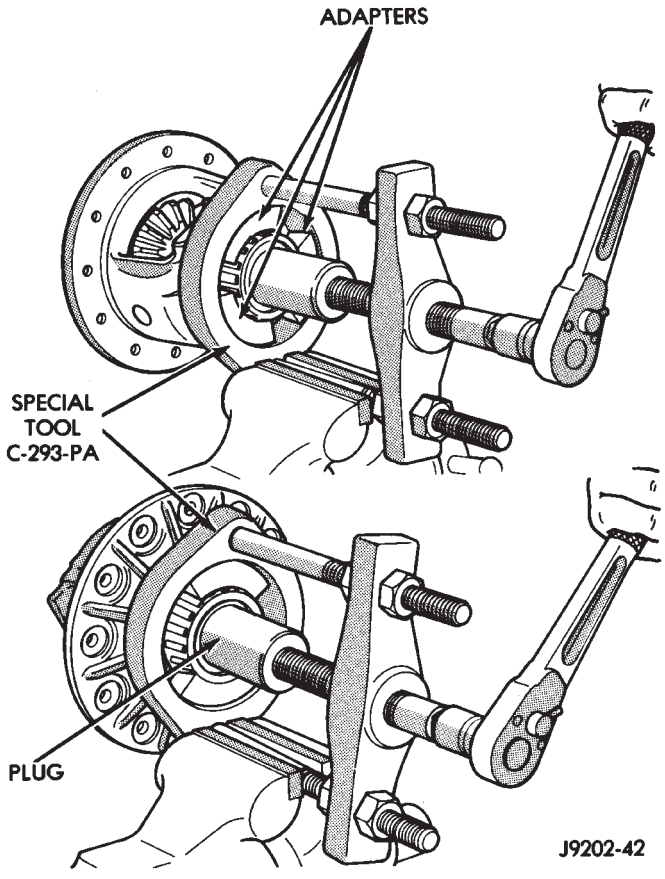

Fig. 16 Differential Bearing Removal

CLEANING/INSPECTION

(1) Clean all differential components in cleaning solvent. Allow the bearings to either air dry or dry them with a lint-free cloth. Dry the other components with compressed air.

(2) Examine each component for wear or damage.

(3) Replace shims, bearings and cups as a set only. Replace bearings and cups if either is galled, worn, cracked, or damaged.

(4) Inspect the differential side and pinion gears. Replace any gear that is worn, cracked or chipped.

(5) Inspect differential case and replace case if cracked or damaged.

Polish each axle shaft sealing surface with No. 600 crocus cloth. This can remove slight surface damage. Do not reduce the diameter of the axle shaft seal contact surface. When polishing, the crocus cloth should be moved around the circumference of the shaft (not in-line with the shaft).

When replacing a drive pinion gear bearing, always replace the bearing and cup as a matched set.

(6) Inspect the axle shaft C-clip locks for cracks or excessive wear. Replace them if necessary.

(7) Test each threaded adjuster to determine if it rotates freely.

(8) If an adjuster binds, repair the damaged threads or replace the adjuster.

DIFFERENTIAL CASE ASSEMBLY

(1) Lubricate all the differential case components with gear lubricant.

(2) Place the thrust washers on the differential side gears. Position the gears in the differential case counterbores.

If replacement side gears or thrust washers are used, refer to Differential Side Gear Clearance Measurement And Adjustment (Fig. 17).

SIDE GEAR CLEARANCE	0.007
THRUST WASHER THICKNESS	+ 0.033
TOTAL	0.040
	0.040
REPLACEMENT WASHER THICKNESS	− 0.037
NEW SIDE GEAR CLEARANCE	0.003

J9203-31

Fig. 17 Side Gear Calculations

(3) Position the thrust washers on the differential pinion gears. Mesh the pinion gears with the side gears.**Ensure that the pinion gears are exactly 180 degrees opposite each other.**

(4) Rotate the side gears to align the pinion gears and thrust washers. Align these components with the mate shaft bores in the case.

(5) If ring gear was removed, clean all contact surfaces. Use an Arkansas stone or fine file to remove any sharp areas from the chamfered inside diameter.

(6) If removed, heat ring gear with a heat lamp or by immersing in a hot fluid. The temperature should not exceed 149°C (300°F). **Do not use a torch to heat the ring gear.**

(7) Position heated rear gear on case. Use two equally spaced Pilot Studs C-3288-B to align the gear with the flange holes (Fig. 18).

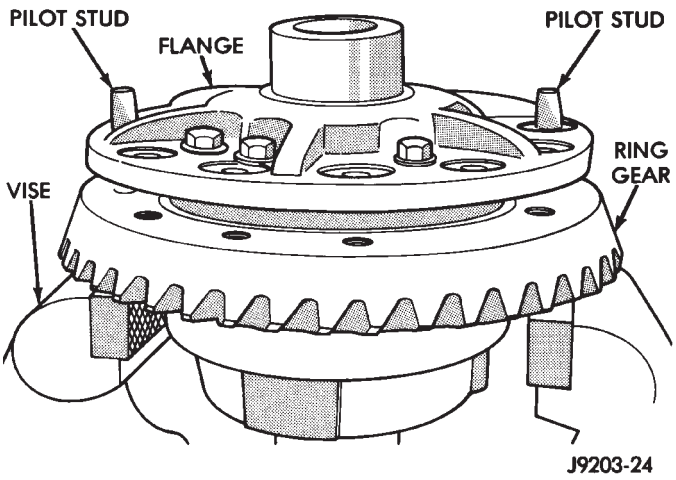

Fig. 18 Case-To-Ring Gear Alignment

(8) Install replacement ring gear bolts (with left hand threads). Alternately and evenly tighten each bolt to 95 N·m (70 ft. lbs.) torque.

CAUTION: When installing a differential bearing, never apply force to the bearing cage because bearing damage will result.

(9) Install a differential bearing on each hub with Installer C-4340 and Handle C-4171 (Fig. 19).

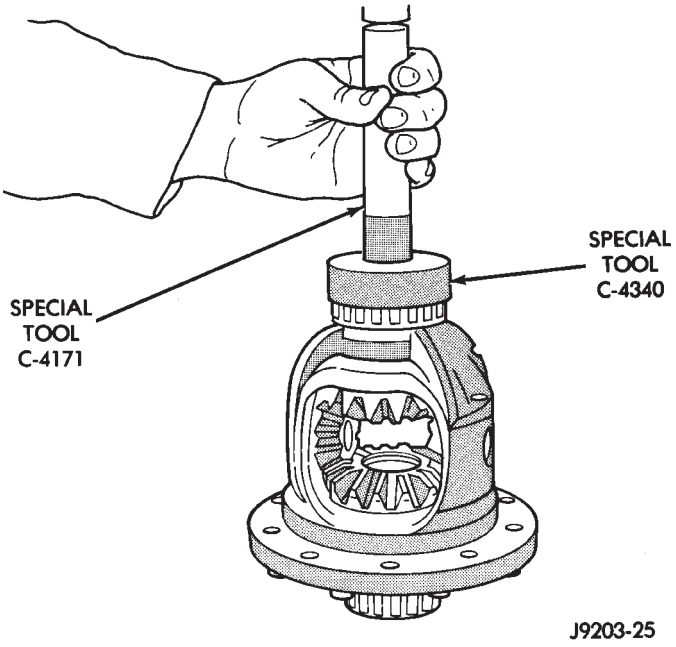

Fig. 19 Differential Bearing Installation

PINION DEPTH MEASUREMENT AND ADJUSTMENT WITH GAUGE SET 6575

(1) Use pinion gear adjustment gauge set 6575 (Fig. 20) and continue the assembly:

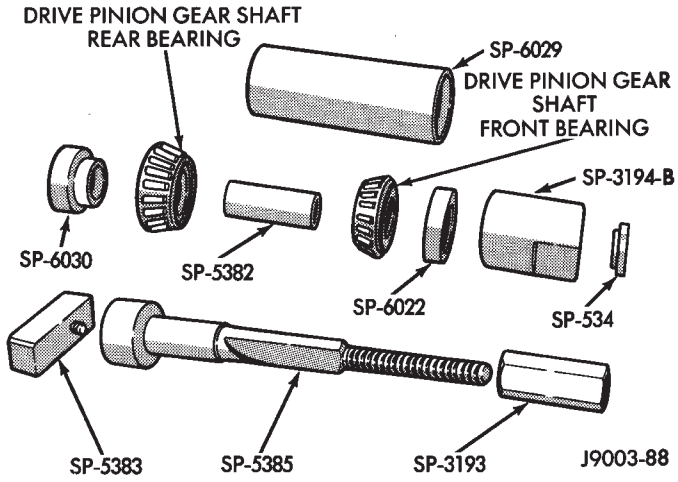

Fig. 20 Axle Adjustment Tools—8 1/4

(2) Install front (outer) bearing cup use Installer D-130 and Handle C-4171.

(3) Install rear (inner) bearing cup use Installer C-4308 and Handle C-4171.

Assemble tools as described;

- Position Spacer (SP-6030) over Shaft (SP-5385)
- Position pinion rear bearing on shaft
- Position tools (with bearing) in the housing
- Install Sleeve (SP-5382)
- Install pinion front bearing
- Install Spacer (SP-6022)
- Install Sleeve (SP-3194-B), Washer (SP-534) and Nut (SP-3193)

(4) Prevent compression sleeve tool from turning with Wrench C-3281.

Tighten the nut to seat the pinion bearings in the housing (Fig. 21). Allow the sleeve to turn several times during the tightening to prevent brinelling the bearing cups or bearings.

Depth shim(s) are positioned between the pinion gear rear bearing and pinion gear. The required thickness of the depth shim(s) is determined according to the following information.

(5) Loosen the compression nut tool. Lubricate the pinion gear front and rear bearings with gear lubricant. Re-tighten the compression nut tool to 1 to 3 N·m (15 to 25 in. lbs.) torque. Rotate the pinion gear several complete revolutions to align the bearing rollers.

(6) Install Gauge Block SP-5383 at the end of SP-5385. Install Cap Screw (SP-536) and tighten.

(7) Position Arbor (SP-6029) in the differential housing (Fig. 22).

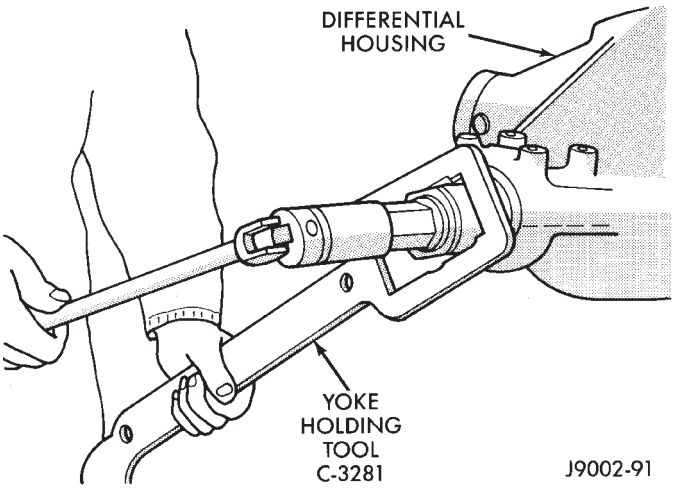

Fig. 21 Seating Pinion Bearings

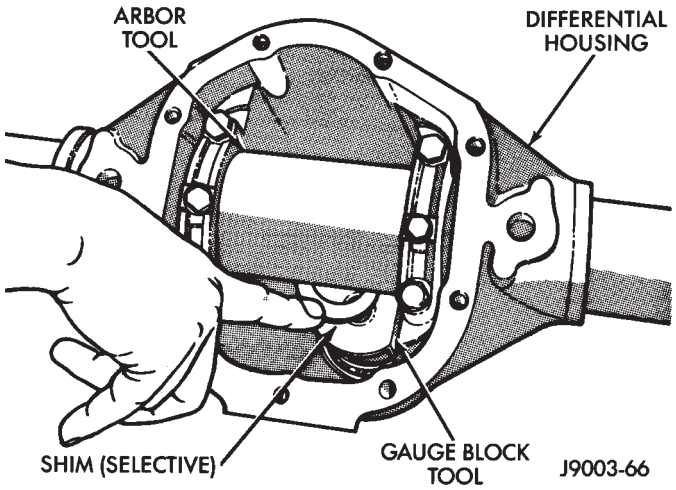

Fig. 22 Depth Shim(s) Selection

(8) Center the tool. Place a piece of 0.002 inch shim stock at each end of the arbor tool. Install the bearing caps on the arbor tool. Tighten the cap bolts to 14 N·m (10 ft. lbs.) torque.

(9) Trial fit depth shim(s) between the arbor tool and gauge block tool (Fig. 22). **The depth shim(s) fit must be snug but not tight (drag friction of a feeler gauge blade).**

Depth shims are available in 0.001-inch increments from 0.020 inch to 0.038 inch.

(10) Note the etched number on the face of the pinion gear. The numbers represent thousands-of-an-inch deviation from the standard. If the number is - (negative), add that value to the required thickness of the depth shim(s). If the number is + (positive), subtract that value from the thickness of the depth shim(s). If the number is 0, no change is necessary.

(11) Remove tools from differential housing.

(12) Position depth shim(s) on the pinion gear. Install rear bearing with Installer C-4040 (Fig. 23). Be sure the contact surfaces are clean and without foreign particles.

(13) Lubricate pinion gear front and rear bearings with gear lubricant.

(14) Install pinion gear into the housing. Install new collapsible spacer at the end of the pinion gear. Install pinion gear front bearing.

(15) Install pinion yoke with Remover/Installer C-3718 and Wrench C-3281 (Fig. 24).

PINION GEAR DEPTH VARIANCE

Original Pinion Gear Depth Variance	Replacement Pinion Gear Depth Variance								
	−4	−3	−2	−1	0	+1	+2	+3	+4
+4	+0.008	+0.007	+0.006	+0.005	+0.004	+0.003	+0.002	+0.001	0
+3	+0.007	+0.006	+0.005	+0.004	+0.003	+0.002	+0.001	0	−0.001
+2	+0.006	+0.005	+0.004	+0.003	+0.002	+0.001	0	−0.001	−0.002
+1	+0.005	+0.004	+0.003	+0.002	+0.001	0	−0.001	−0.002	−0.003
0	+0.004	+0.003	+0.002	+0.001	0	−0.001	−0.002	−0.003	−0.004
−1	+0.003	+0.002	+0.001	0	−0.001	−0.002	−0.003	−0.004	−0.005
−2	+0.002	+0.001	0	−0.001	−0.002	−0.003	−0.004	−0.005	−0.006
−3	+0.001	0	−0.001	−0.002	−0.003	−0.004	−0.005	−0.006	−0.007
−4	0	−0.001	−0.002	−0.003	−0.004	−0.005	−0.006	−0.007	−0.008

J8902-46

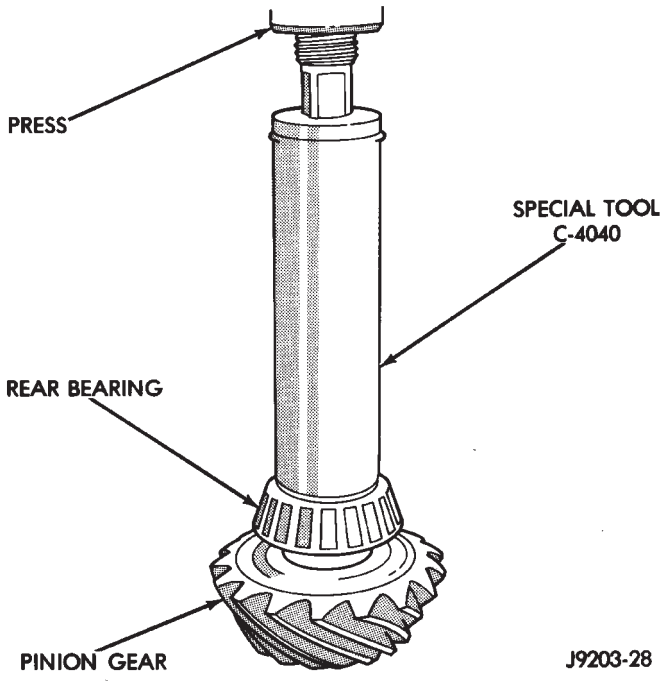

Fig. 23 Shaft Rear Bearing Installation

It is necessary to use the tools (above) to correctly seat the front bearing on the drive pinion gear shaft (Fig. 24).

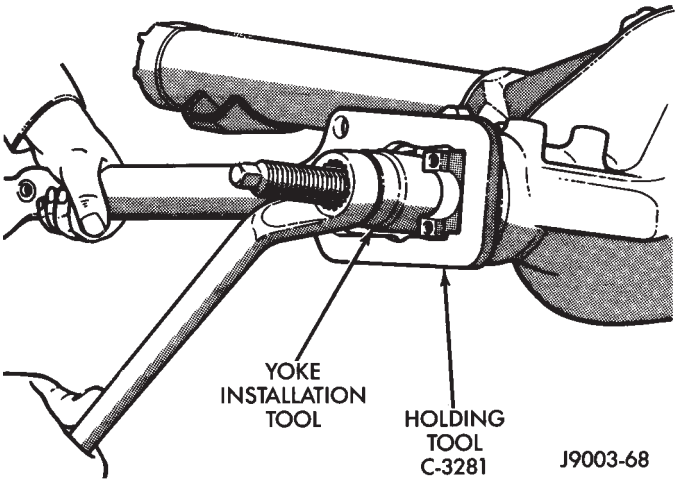

Fig. 24 Pinion Yoke Installation

CAUTION: Use care to prevent collapsing preload collapsible spacer during installation of the yoke and seating the front bearing.

(16) Remove yoke and tools from the pinion gear.

(17) Install the pinion seal with Seal Installer C-4076-A and Handle C-4735-1 (Fig. 25).

The outer perimeter of the seal is pre-coated with a special sealant. An additional application of sealant is not required.

(18) Install pinion yoke with Remover/Installer C-3718 and Wrench C-3281.

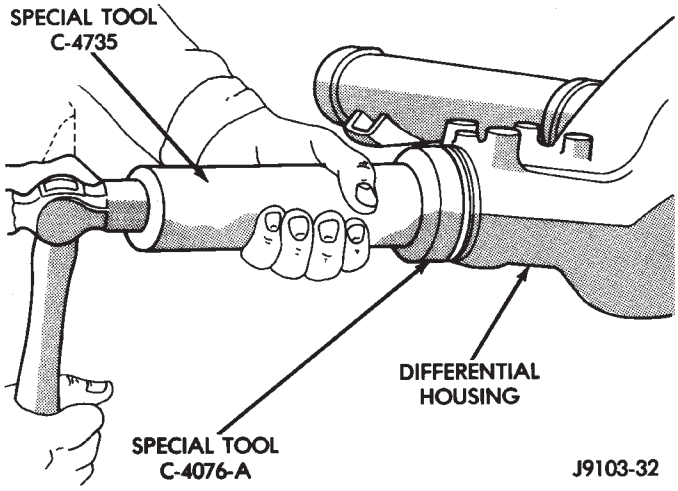

Fig. 25 Pinion Gear Seal Installation

(19) Remove the tools. Install the Belleville washer. The convex side of the washer must face outward. Install the pinion nut.

(20) Retain pinion yoke with Wrench C-3281. Initially tighten the pinion gear shaft nut enough to remove the bearing end play. While tightening, rotate the pinion shaft to ensure the bearing rollers are correctly seated.

(21) Tighten the pinion nut (Fig. 26) to 285 N·m (210 ft. lbs.) torque (minimum).

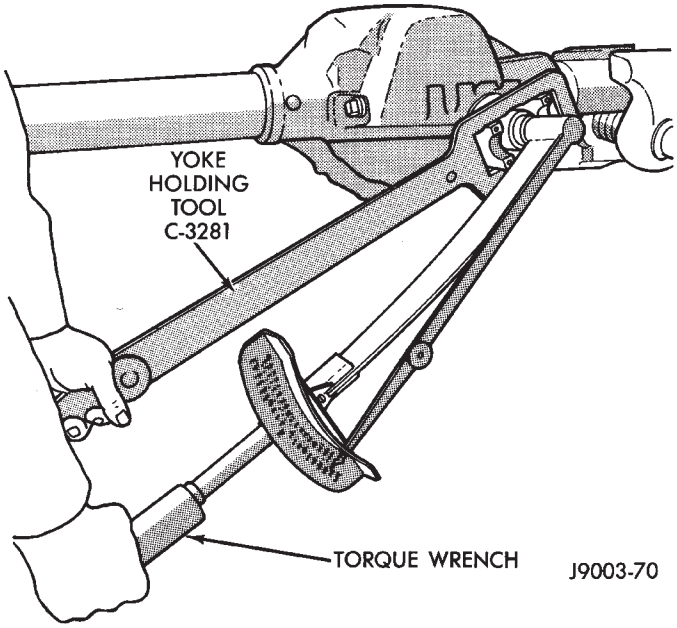

Fig. 26 Tightening Pinion Gear Nut

(22) Remove the tools from the shaft. Rotate the pinion several revolutions to seat the bearing rollers.

CAUTION: Never loosen pinion gear nut to decrease pinion gear bearing preload torque and never exceed specified preload torque. If preload torque is exceeded a new collapsible spacer must be installed. The torque sequence will have to be repeated.

(23) Measure pinion bearing preload torque by rotating pinion shaft with a Newton-meter or an inch-pound torque wrench. The correct bearing preload torque is 1 to 2 N·m (10 to 20 in. lbs.). This torque value is with replacement bearings and pinion nut tightened with a minimum of 285 N·m (210 ft. lbs.) torque (Fig. 27).

When using original pinion rear bearing and a replacement front bearing. The correct preload torque is 1 N·m (10 in. lbs.) in addition to the torque measured and recorded during disassembly.

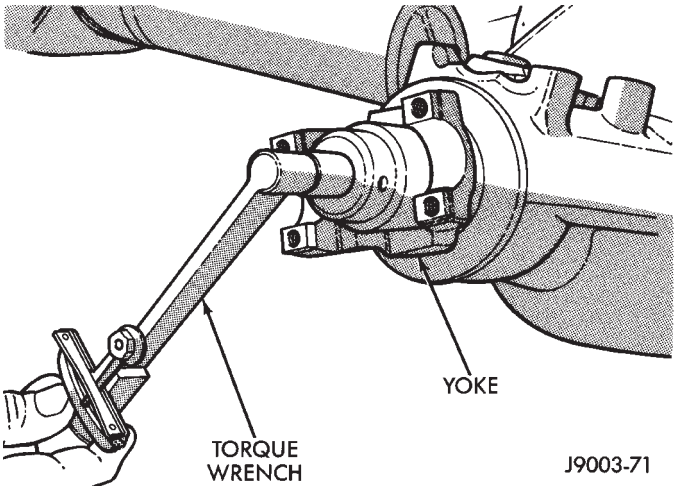

Fig. 27 Bearing Preload Torque Measurement

The bearing preload torque should be constant during a complete revolution of the pinion gear shaft. If preload torque varies during rotation of the shaft, there is an internal binding that must be corrected before final assembly.

(24) If the specified torque is not obtained, tighten the nut in small increments until the preload torque is obtained.

The differential will be unacceptable for use if the final nut torque is less than 285 N·m (210 ft. lbs.) torque. If the preload torque is not within the specified range this is also unacceptable.

DIFFERENTIAL CASE INSTALLATION

(1) Apply a coating of hypoid gear lubricant to the differential bearings, bearing cups and threaded adjusters. A dab of grease can be used to keep the adjusters in position. Carefully position the assembled differential case in the housing.

(2) Observe the reference marks and install the differential bearing caps at their original locations (Fig. 28).

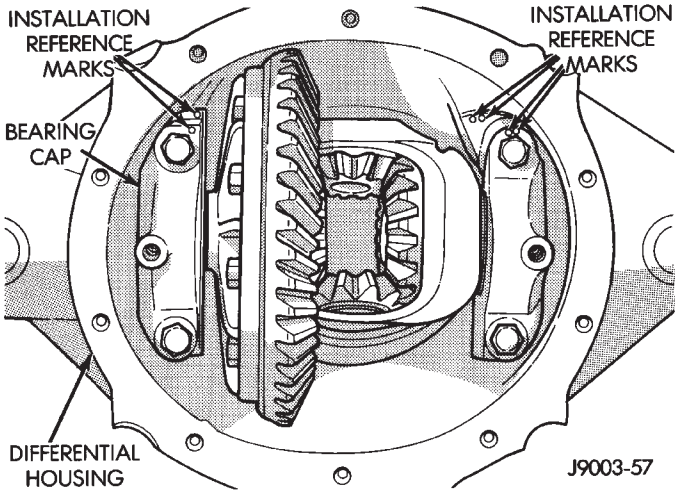

Fig. 28 Bearing Caps & Bolts

(3) Install the bearing cap bolts (Fig. 28). Tighten the upper bolts to 14 N·m (10 ft. lbs.) torque. Tighten the lower bolts finger-tight until the bolt head is lightly seated.

DIFFERENTIAL BEARING PRELOAD AND RING GEAR BACKLASH ADJUSTMENT

The following limitations must be considered when adjusting the differential:

- The maximum ring gear backlash variation is 0.003 inch (0.076 mm).
- Mark the gears so the same teeth are meshed during all backlash measurements.
- Maintain the specified threaded-adjuster torque while adjusting.
- Excessive adjuster torque will introduce a high bearing load and cause premature bearing failure. Insufficient adjuster torque can result in excessive differential case free-play and ring gear noise.
- Insufficient adjuster torque will not support the ring gear correctly and can cause excessive differential case free-play and ring gear noise.

The differential bearing cups will not always immediately follow the threaded adjusters as they are moved during adjustment. Ensure accurate bearing cup responses to the adjustments. Maintain the gear teeth engaged (meshed) as marked. The bearings must be seated by rapidly rotating the pinion gear a half turn back and forth. Do this five to ten times each time the threaded adjusters are adjusted.

(1) Use Wrench C-4164 to adjust each threaded adjuster inward (Fig. 29) until the differential bearing free-play is eliminated. Allow some ring gear backlash (approximately 0.01 inch/0.25 mm) between the

ring and pinion gear. Seat the bearing cups with the procedure described above.

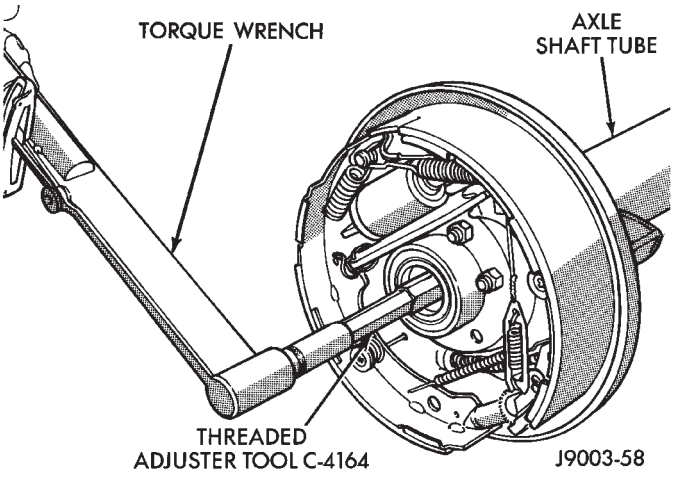

Fig. 29 Threaded Adjuster Tool

(2) Install Dial Indicator (Fig. 30). Position the plunger against the drive side of a ring gear tooth. Measure the backlash at 4 positions (90 degrees apart) around the ring gear. Locate and mark the area of minimum backlash.

(3) Rotate the ring gear to the position of the least backlash. Mark the gear so that all future backlash measurements will be taken with the same gear teeth meshed.

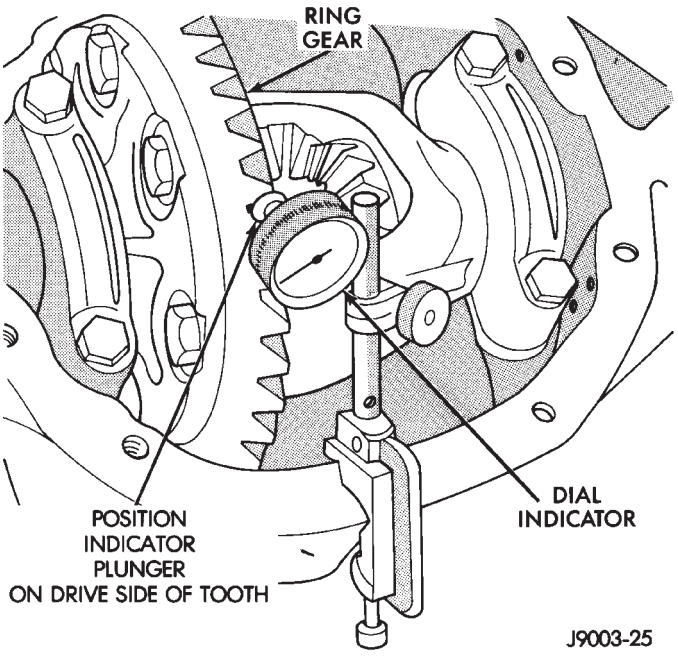

Fig. 30 Ring Gear Backlash Measurement

(4) Loosen the right-side, tighten the left-side threaded adjuster. Obtain backlash of 0.003 to 0.004 inch (0.076 to 0.102 mm) with each adjuster tightened to 14 N·m (10 ft. lbs.) torque. Seat the bearing cups with the procedure described above.

(5) Tighten the differential bearing cap bolts to 136 N·m (100 ft. lbs.) torque.

(6) Use Wrench C-4164 to tighten the right-side threaded adjuster to 95 N·m (70 ft. lbs.) torque. Seat the bearing cups with the procedure described above. Continue to tighten the right-side adjuster and seat bearing cups until the torque remains constant at 95 N·m (70 ft. lbs.)

(7) Measure the ring gear backlash. The range of backlash is 0.005 to 0.008 inch (0.127 to 0.203 mm).

Continue increasing the torque at the right-side threaded adjuster until the specified backlash is obtained.

The left-side threaded adjuster torque should have approximately 95 N·m (70 ft. lbs.) torque. If the torque is considerably less, the complete adjustment procedure must be repeated.

(8) Tighten the left-side threaded adjuster until 95 N·m (70 ft. lbs.) torque is indicated. Seat the bearing rollers with the procedure described above. Do this until the torque remains constant.

(9) Install the threaded adjuster locks . Ensure the lock finger is engaged with the adjuster hole. Tighten the lock screws to 10 N·m (90 in. lbs.) torque.

SIDE GEAR CLEARANCE MEASUREMENT AND ADJUSTMENT

When measuring side gear clearance, check each gear independently. If it necessary to replace a side gear, replace both gears as a matched set.

(1) Install the axle shafts and C-clip locks and pinion mate shaft. If necessary, refer to the installation located within this group.

(2) Measure each side gear clearance. Insert a matched pair of feeler gauge blades between the gear and differential housing on opposite sides of the hub (Fig. 31).

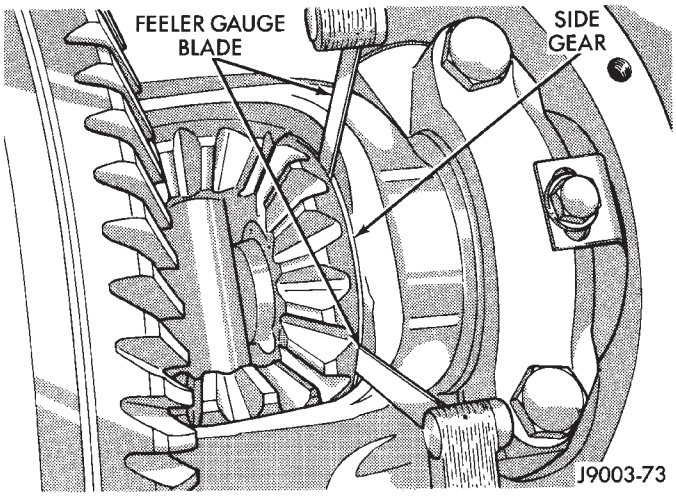

Fig. 31 Side Gear Clearance Measurement

(3) If side gear clearances is no more than 0.005 inch. Determine if the shaft is contacting the pinion

gear mate shaft. **Do not remove the feeler gauges, inspect the axle shaft with the feeler gauge inserted behind the side gear.** If the end of the axle shaft is not contacting the pinion gear mate shaft, the side gear clearance is acceptable.

(4) If clearance is more than 0.005 inch (axle shaft not contacting mate shaft), record the side gear clearance. Remove the thrust washer and measure its thickness with a micrometer. Add the washer thickness to the recorded side gear clearance. The sum of gear clearance and washer thickness will determine required thickness of replacement thrust washer (Fig. 32).

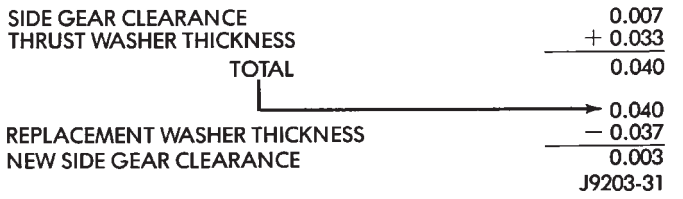

Fig. 32 Side Gear Calculations

In some cases, the end of the axle shaft will move and contact the mate shaft when the feeler gauge is inserted. The C-clip lock is preventing the side gear from sliding on the axle shaft.

(5) If there is no side gear clearance, remove the C-clip lock from the axle shaft. Use a micrometer to measure the thrust washer thickness. Record the thickness and re-install the thrust washer. Assemble the differential case without the C-clip lock installed and re-measure the side gear clearance.

(6) Compare both clearance measurements. If the difference is less than 0.012 inch (0.305 mm), add clearance recorded when the C-clip lock was installed to thrust washer thickness measured. The sum will determine the required thickness of the replacement thrust washer.

(7) If clearance is 0.012 inch (0.305 mm) or greater, both side gears must be replaced (matched set) and the clearance measurements repeated.

(8) If clearance (above) continues to be 0.012 inch (0.305 mm) or greater, the case must be replaced.

RING GEAR TEETH CONTACT PATTERN ANALYSIS

The ring gear teeth contact patterns will show if the pinion gear depth shim(s) have the correct thickness. It will also show if the ring gear backlash has been adjusted correctly. The backlash must be maintained within the specified limits until the correct teeth contact patterns are obtained.

- Excessive backlash is corrected by moving the ring gear teeth closer to the pinion gear teeth
- Insufficient backlash is corrected by moving the ring gear away from the pinion gear

(1) Apply yellow ferrous (iron) oxide compound to both sides of ring gear teeth.

(2) Rotate the ring gear one complete revolution in both directions.

(3) Note patterns in compound. Refer to (Fig. 33) for interpretation of contact patterns and adjust accordingly.

(4) Install the axle shafts. Refer to Axle Shaft Installation within this group.

(5) Install the housing cover. Refill the differential with lubricant. Refer to Axle Shaft Installation.

DRIVE SIDE OF RING GEAR TEETH	COAST SIDE OF RING GEAR TEETH	
HEEL TOE 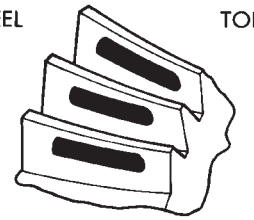	TOE HEEL 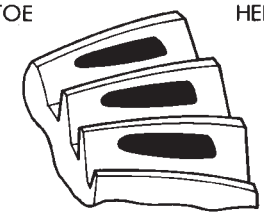	DESIRABLE CONTACT PATTERN. PATTERN SHOULD BE CENTERED ON THE DRIVE SIDE OF TOOTH. PATTERN SHOULD BE CENTERED ON THE COAST SIDE OF TOOTH, BUT MAY BE SLIGHTLY TOWARD THE TOE. THERE SHOULD ALWAYS BE SOME CLEARANCE BETWEEN CONTACT PATTERN AND TOP OF THE TOOTH.
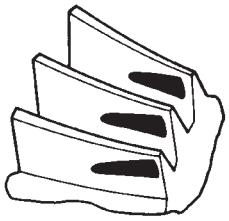	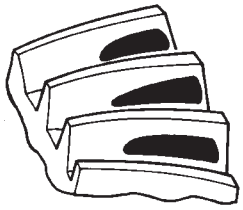	RING GEAR BACKLASH CORRECT. **THINNER** PINION GEAR DEPTH SHIM REQUIRED.
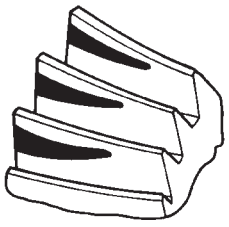	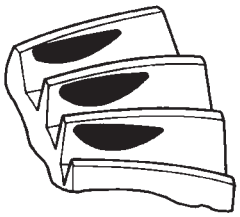	RING GEAR BACKLASH CORRECT. **THICKER** PINION GEAR DEPTH SHIM REQUIRED.
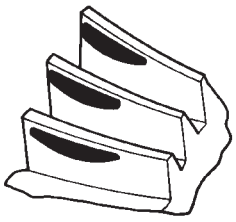	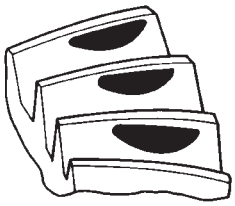	PINION GEAR DEPTH SHIM CORRECT. **DECREASE** RING GEAR BACKLASH.
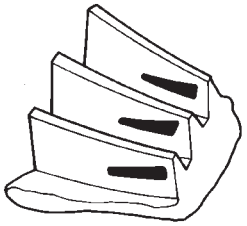	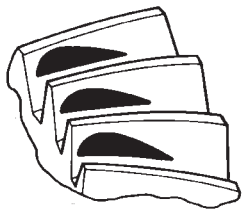	PINION GEAR DEPTH SHIM CORRECT. **INCREASE** RING GEAR BACKLASH.

J9003-24

Fig. 33 Gear Teeth Contact Patterns

TRAC-LOK DIFFERENTIAL

OPERATION

In a conventional differential, the torque applied to the ring gear is transmitted to the axle shafts through the differential gears. During normal operation, the torque transmitted to each wheel is equal at all times. However, if one wheel spins, the opposite wheel will generate only as much torque as the spinning wheel.

In the Trac-Lok differential, part of the ring gear torque is transmitted through clutch packs. The clutch packs contain multiple disc. The clutch will have radial grooves on the plates, and concentric grooves on the discs or bonded fiber material which is smooth.

In operation, the Trac-Lok clutches are engaged by two concurrent forces. The first being preload force exerted through Belleville spring washers. The second is from separating forces generated by the side gears (Fig. 1).

The Trac-Lok design provides the normal differential action needed for turning corners. It also provides for the transmission of equal torque to both wheels when driving straight ahead. When one wheel loses traction, the clutch packs transfer torque to the wheel having the most traction. Trac-lok differentials resist wheel spin on bumpy roads. It also provides more pulling power when one wheel loses traction. Pulling power is continuous until both wheels lose traction. If both wheels slip due to unequal traction, Trac-Lok operation is normal. In extreme cases of differences of traction, the wheel with the least traction may spin. This occurs after the Trac-Lok has transferred as much torque as possible to the non-spinning wheel.

NOISE DIAGNOSIS

If chatter occurs when turning corners, the most probable cause is incorrect or contaminated lubricant. Before removing the Trac-Lok unit for repair, drain, flush and refill the axle with the specified lubricant. Refer to Lubricant change in this Group.

A container of Trac-Lok Lubricant (friction modifier) should be added after.

Vehicles with a limited slip differential should be road tested by making 10 to 12 slow figure-eight turns. This maneuver will pump the lubricant through the clutch discs.

Refer to Group 0, Lubrication and Maintenance for additional information.

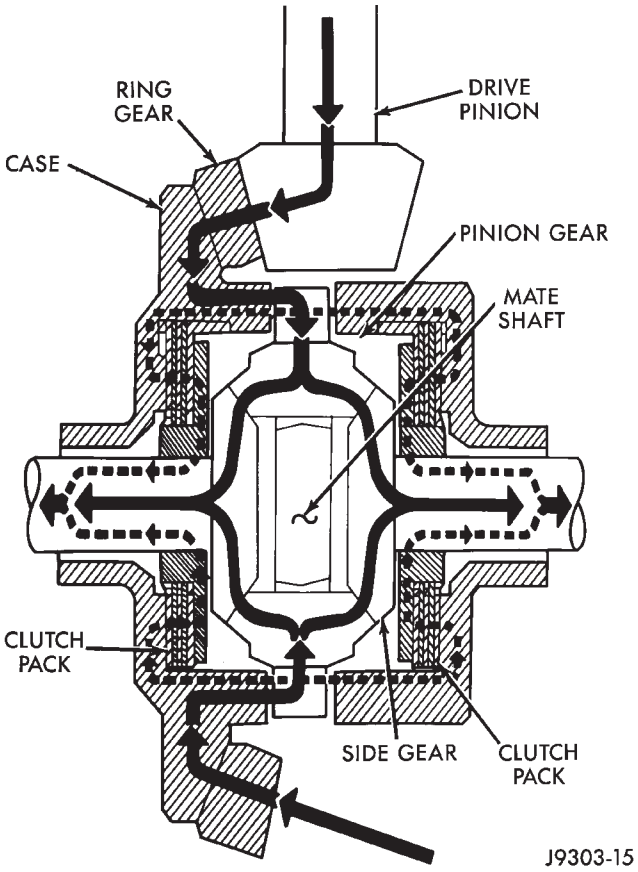

Fig. 1 Limited Slip Differential Operation—Both Wheels Driving

DIFFERENTIAL TEST

WARNING: WHEN SERVICING VEHICLES WITH A LIMITED SLIP DIFFERENTIAL DO NOT USE THE ENGINE TO TURN THE AXLE AND WHEELS. BOTH REAR WHEELS MUST BE RAISED AND THE VEHICLE SUPPORTED. A LIMITED SLIP AXLE CAN EXERT ENOUGH FORCE (IF ONE WHEEL IS IN CONTACT WITH THE SURFACE) TO CAUSE THE VEHICLE TO MOVE.

The differential can be tested without removing the differential case by measuring rotating torque. Make sure brakes are not dragging during this measurement.

(1) Engine off, transmission in neutral, and parking brake off.

(2) Place blocks in front and rear of both front wheels.

(3) Jack up one rear wheel until it is completely off the ground.

(4) Remove wheel and bolt special tool to studs.

(5) Use torque wrench on Special Tool 6790 to rotate wheel and read rotating torque (Fig. 2).

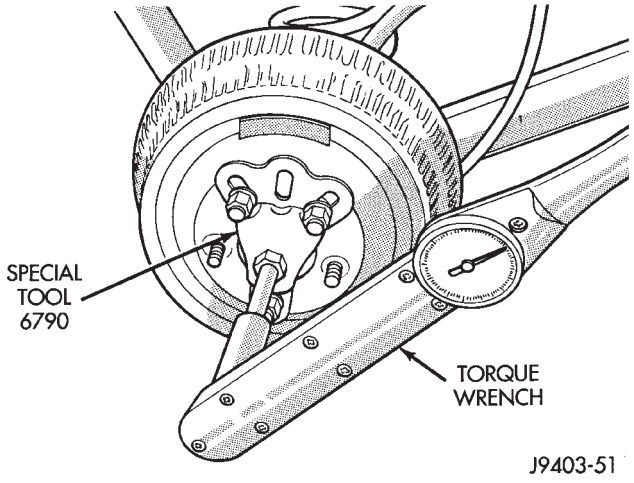

Fig. 2 Trac-Loc Test

(6) If rotating torque is less than 22 N·m (30 ft. lbs.) or more than 271 N·m (200 ft. lbs.) on either wheel the unit should be service.

DIFFERENTIAL OVERHAUL

The Trac-Lok differential components are illustrated in (Fig. 3). Refer to this illustration during repair service.

DISASSEMBLY

Service to the Trac-Lok differential requires the use of Tool Set C-4487 (J-23781). Refer to Model 35 Axle section in this Group for Differential Removal and Installation.

(1) Clamp one axle shaft in a vise equipped with soft jaws (Fig. 4).

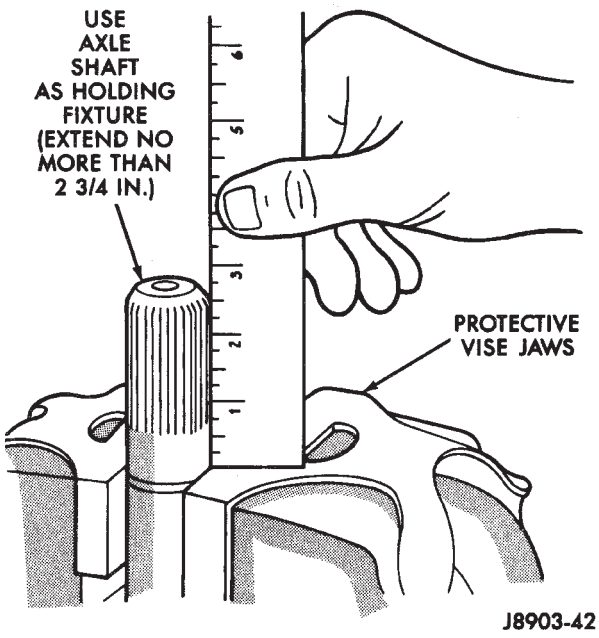

Fig. 4 Axle Shaft As Holding Fixture

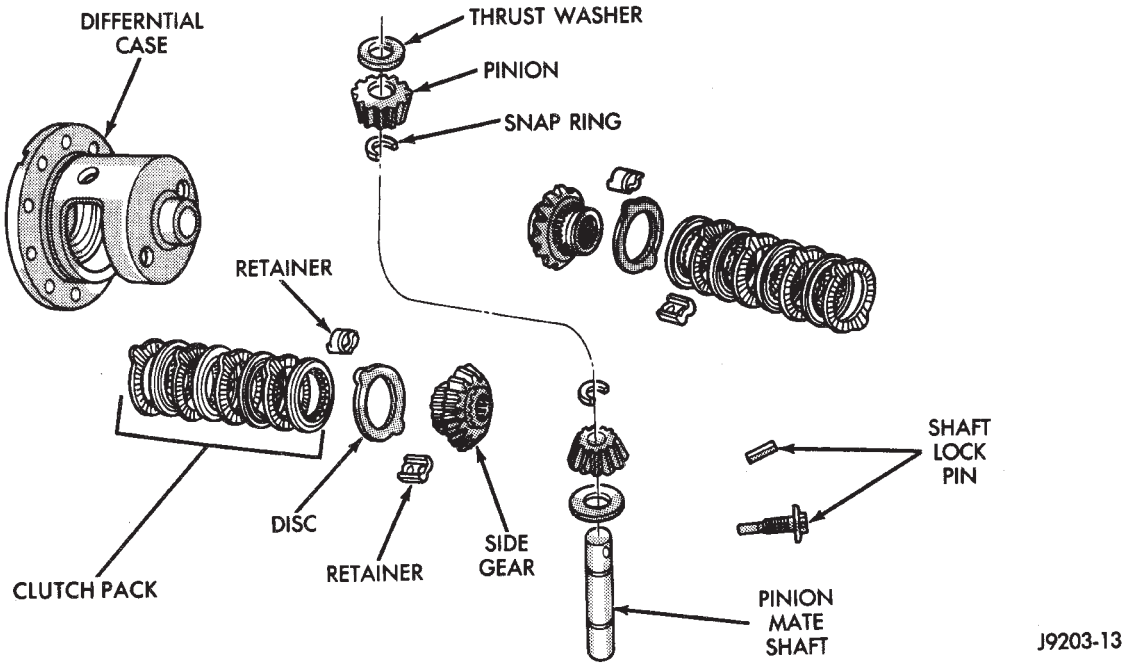

Fig. 3 Trac-Lok Differential Components

(2) Position the differential case on the axle shaft (Fig. 5). Place shop towels under the differential to avoid damage during removal of the ring gear (Fig. 5).

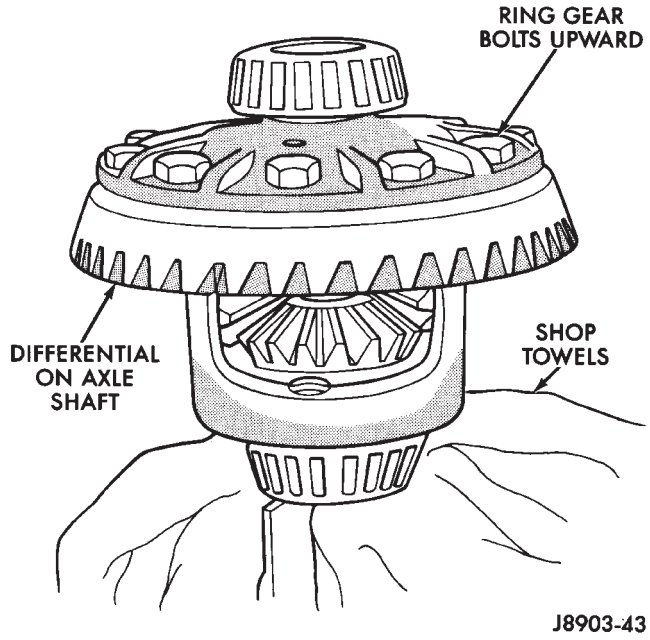

Fig. 5 Differential Case On Shaft

(3) Remove and discard the ring gear bolts. Tap the ring gear with a rawhide or plastic mallet and remove (Fig. 6).

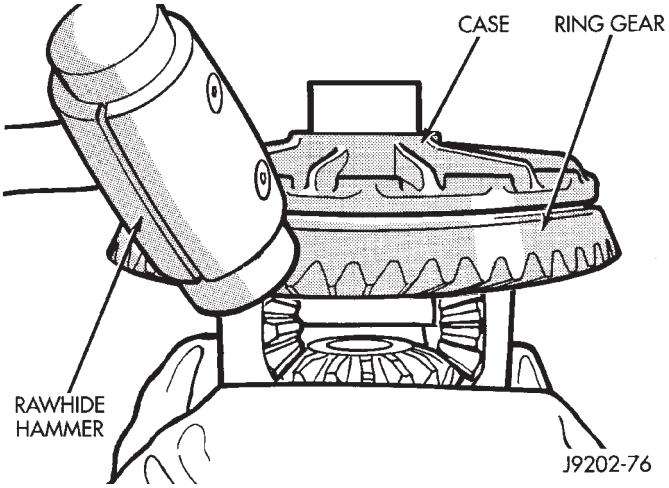

Fig. 6 Ring Gear Removal

(4) Remove the pinion gear mate shaft lock screw (Fig. 7).

(5) Remove the pinion gear mate shaft with a drift and hammer (Fig. 8).

(6) Install and lubricate Step Plate C-4487-1 (Fig. 9).

(7) Assemble Threaded Adapter C-4487-3 into top side gear. Thread forcing Screw C-4487-2 into adapter until it becomes centered in adapter plate.

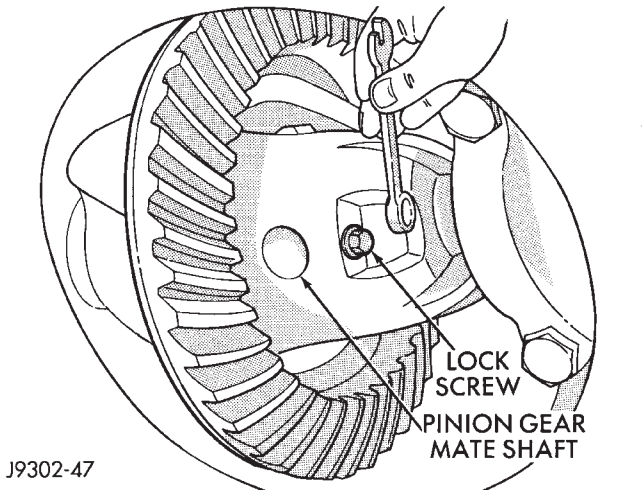

Fig. 7 Mate Shaft Lock Screw

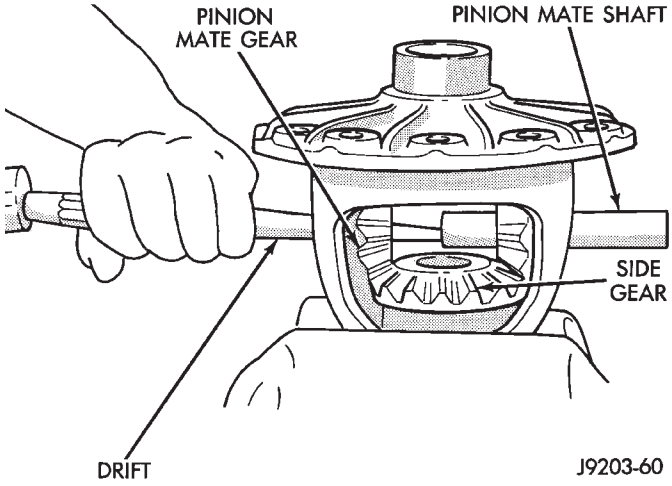

Fig. 8 Mate Shaft Removal

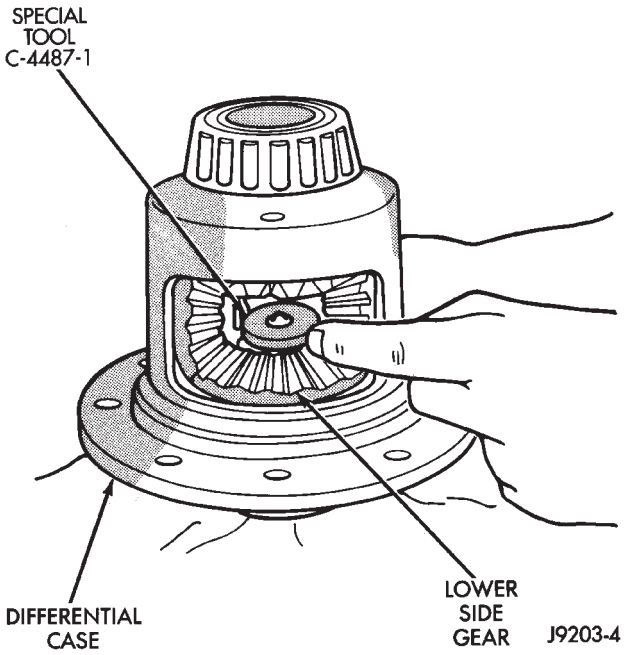

Fig. 9 Step Plate Tool Installation

(8) Position a small screw driver in slot of Threaded Adapter C-4487-3 (Fig. 10 to prevent adapter from turning.

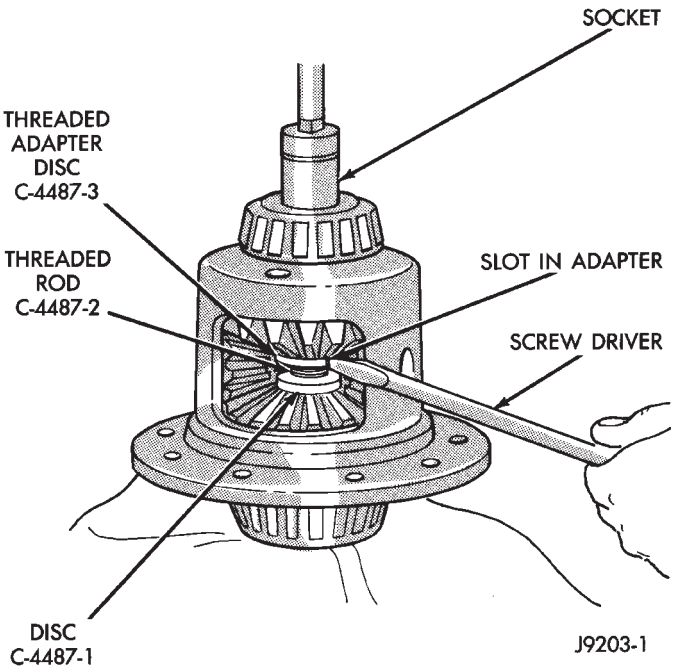

Fig. 10 Threaded Adapter Installation

(9) Tighten forcing screw tool enough to relieve clutch pack tension. Remove both pinion thrust washers (Fig. 11).

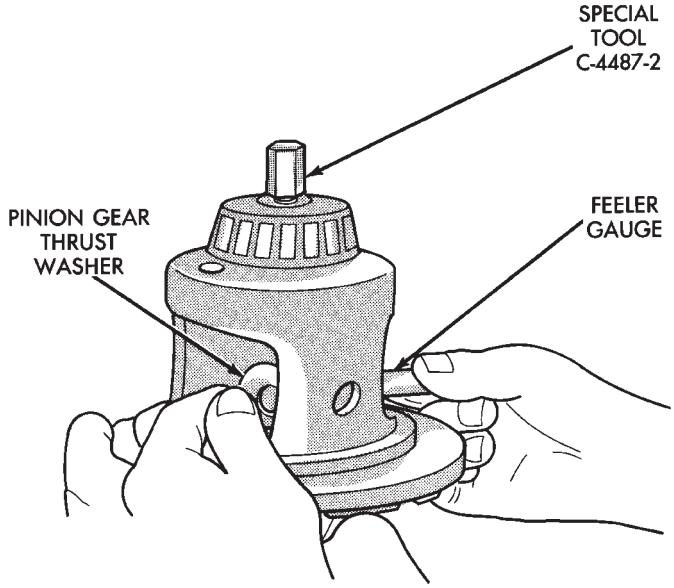

Fig. 11 Remove Pinion Thrust Washer

(10) Loosen the forcing screw tool until the clutch pack tension is relieved.

(11) Insert Turning Bar C-4487-4 in case. Rotate case with tool until pinion gears can be removed (Fig. 12).

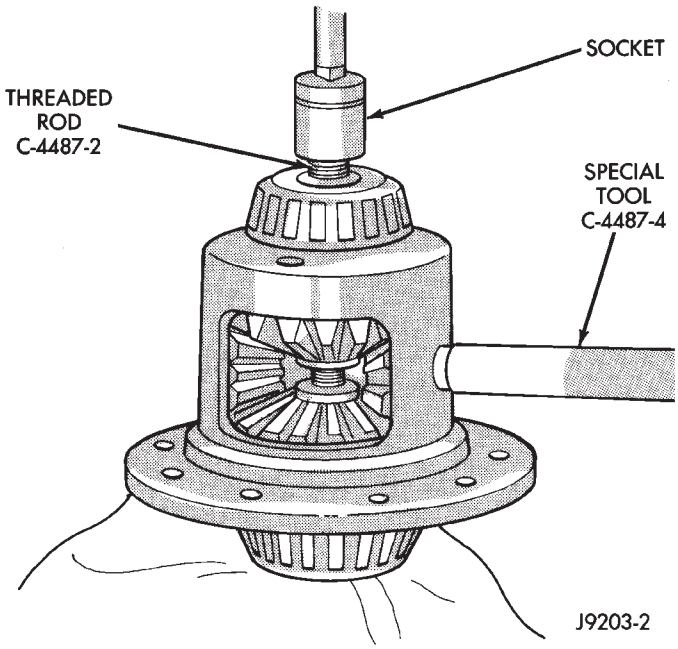

Fig. 12 Pinion Gear Removal

(12) Remove top side gear and clutch pack. Keep plates in correct order during removal (Fig. 13).

(13) Remove case from fixture. Remove remaining clutch pack.

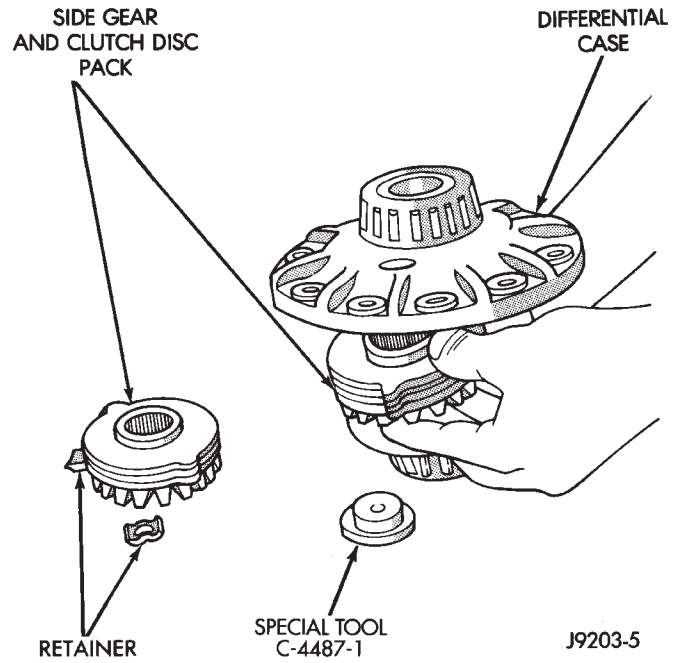

Fig. 13 Side Gear & Clutch Disc Removal

(14) Remove clutch pack retaining clips. Mark each clutch pack for installation reference.

CLEANING AND INSPECTION

(1) Clean all components in cleaning solvent. Dry components with compressed air.

(2) Inspect clutch pack plates for wear, scoring or damage. Replace both clutch packs if any one component in either pack is damaged.

(3) Inspect side and pinion gears. Replace any gear that is worn, cracked, chipped or damaged.

(4) Inspect differential case and pinion shaft. Replace if worn or damaged.

PRESOAK PLATES AND DISC

Plates and dics with fiber coating (no groves or lines) must be presoaked in Friction Modifier before assembly. Soak plates and discs for a minimum of 20 minutes. Add remaining Friction Modifier to differential after assembly.

ASSEMBLY

(1) The clutch discs are replaceable as complete sets only. If one clutch disc pack is damaged, both packs must be replaced. Lubricate each component with gear lubricant before assembly and installation.

(2) Assemble the clutch discs into packs and secure disc packs with retaining clips (Fig. 14).

(3) Position assembled clutch disc packs on the side gear hubs.

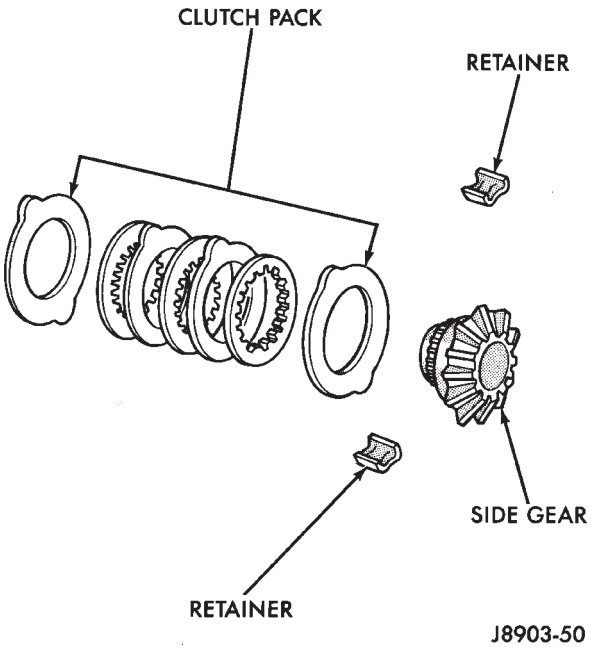

Fig. 14 Clutch Disc Pack

(4) Position case on axle fixture.

(5) Install clutch pack and side gear in lower bore (Fig. 15). Be sure clutch pack retaining clips remain in position and are seated in the case pockets.

(6) Install lubricated Step Plate C-4487-1 on first clutch pack (Fig. 16).

(7) Install the upper side gear and clutch disc pack (Fig. 16).

(8) Hold assembly in position. Insert Threaded Adapter C-4487-3 into top side gear, insert forcing Screw C-4487-2.

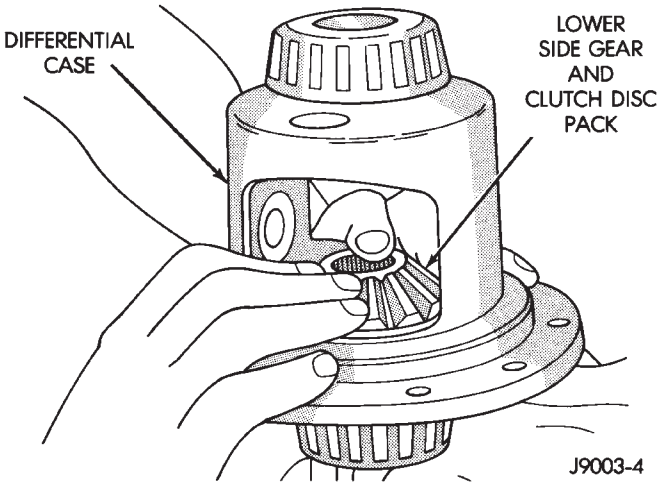

Fig. 15 Clutch Discs & Lower Side Gear Installation

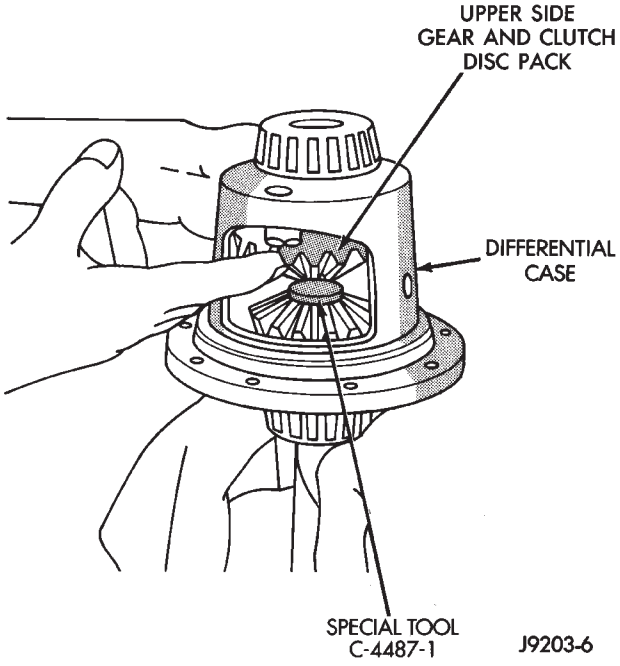

Fig. 16 Upper Side Gear & Clutch Disc Pack Installation

(9) Tighten forcing screw tool to compress clutch discs.

(10) Install pinion gears. Rotate case with Turning Bar C-4487-4. Make sure holes of pinion mate gears are aligned with case.

(11) Tighten forcing screw to compress the Belleville plates. Lubricate and install pinion gear thrust washers with a small screw driver.

(12) Install pinion gear mate shaft (align holes in shaft and case).

(13) Install the pinion mate shaft lock screw finger tight.

If replacement gears and thrust washers were installed, it is not necessary to measure the gear backlash. Correct fit is due to close machining tolerances during manufacture.

(14) Invert the differential case and start two ring gear bolts. This will provide case-to-ring gear bolt hole alignment.

(15) Install new ring gear bolts and alternately tighten to 95-122 N·m (70-90 ft. lbs.) torque (Fig. 17).

(17) Lubricate all differential components with hypoid gear lubricant.

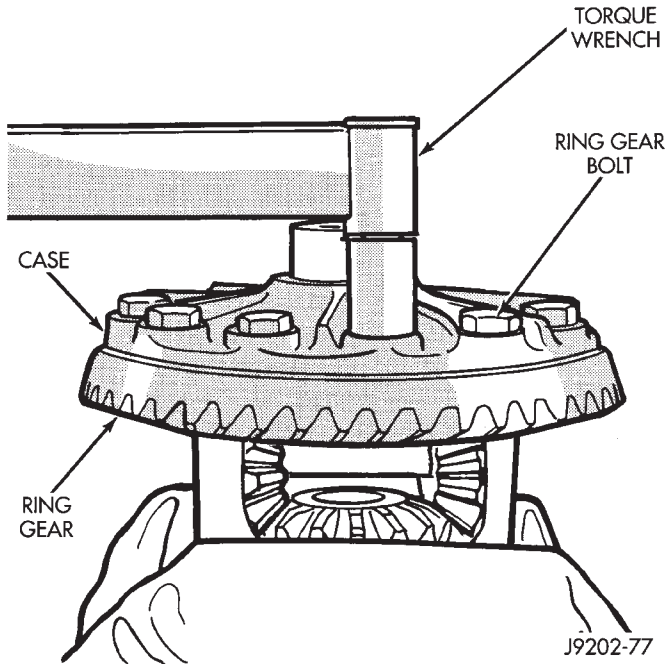

Fig. 17 Ring Gear Bolt Installation

AXLE SPECIFICATIONS

MODEL 35 AXLE

Axle Type.....Semi-Floating Hypoid
Lubricant.....SAE Thermally Stable 80W-90
Lubricant Trailer Tow.....Synthetic 75W-140
Lube Capacity.....1.66 L (3.50 pts.)
Axle Ratio.....3.07, 3.55, 3.73, 4.10
Differential
Bearing Preload.....0.1 mm (0.004 in.)
Side Gear Clearance.....0-0.15 mm (0-0.006 in.)
Ring Gear
Diameter.....19.2 cm (7.562 in.)
Backlash.....0-0.15 mm (0.005-0.008 in.)
Pinion Std. Depth.....96.8 mm (3.813 in.)
Pinion Bearing Preload
Original Bearing.....1-2N·m (10-20 in. lbs.)
New Bearing.....1.5-4N·m (15-35 in. lbs.)

8 1/4 AXLE

Axle Type.....Semi-floating, hypoid
Lubricant.....SAE 75W-90
Lube Capacity.....2.08 L (4.4 pts.)
Axle Ratios.....3.07 3.55 4.10
Differential
Side Gear Clearance.....0.12 mm (0.005 in.)
Case Flange Runout.....0.07 mm (0.003 in.)
Bearing Preload.....95 N·m (70 ft. lbs.)
Ring Gear
Diameter.....20.95 cm (8.25 in.)
Backlash.....0.12-0.20 mm (0.005-0.008 in.)
Runout.....0.127 mm (0.005 in.)
Pinion Bearing
Preload.....1-2 N·m (10-20 in.lbs.)

TORQUE SPECIFICATIONS

XJ REAR SUSPENSION COMPONENTS

DESCRIPTION.....TORQUE
Shock Absorber
Upper Bolt.....23 N·m (17 ft. lbs.)
Lower Nut.....62 N·m (46 ft. lbs.)
Stabilizer Bar
Clamp Bolt.....54 N·m (40 ft. lbs.)
Link Upper Bolt.....12 N·m (9 ft. lbs.)
Link Lower Nut.....74 N·m (55 ft. lbs.)
Spring
U-Bolt Nut.....70 N·m (52 ft. lbs.)
Front Pivot Bolt.....148 N·m (109 ft. lbs.)
Upper Shackle Bolt.....148 N·m (109 ft. lbs.)
Lower Shackle Bolt.....108 N·m (80 ft. lbs.)

YJ REAR SUSPENSION COMPONENTS

DESCRIPTION.....TORQUE
Shock Absorber
Upper Nut.....61 N·m (45 ft. lbs.)
Lower Nut.....61 N·m (45 ft. lbs.)
Track Bar
Frame Bracket Nut.....142 N·m (105 ft. lbs.)
Axle Bracket Nut.....142 N·m (105 ft. lbs.)
Spring
U-Bolt Nut.....122 N·m (90 ft. lbs.)
Rear Shackle Bolts.....136 N·m (100 ft. lbs.)
Front Pivot Bolt.....142 N·m (105 ft. lbs.)

MODEL 35 AXLE

DESCRIPTION.....TORQUE
Fill Hole Plug.....34 N·m (25 ft. lbs.)
Diff. Cover Bolt.....41 N·m (30 ft. lbs.)
Bearing Cap Bolt.....77 N·m (57 ft. lbs.)
Pinion Nut.....292-427 N·m (215-315 ft. lbs.)
Ring Gear Bolt.....95-122 N·m (70-90 ft. lbs.)
RWAL/ABS Sensor Bolt.....24 N·m (18. ft. lbs.)

8 1/4 AXLE

DESCRIPTION.....TORQUE
Diff. Cover Bolt.....47 N·m (35 ft. lbs.)
Bearing Cap Bolt.....95 N·m (70 ft. lbs.)
Pinion Nut.....285 N·m (210 ft. lbs.)
Ring Gear Bolt.....95 N·m (70 ft. lbs.)
RWAL/ABS Sensor Bolt.....24 N·m (18. ft. lbs.)

BRAKES

CONTENTS

page

ABS BRAKE DIAGNOSIS 3
ABS OPERATION AND SERVICE 33
BRAKE FLUID—BRAKE BLEEDING—
BRAKELINES AND HOSES 10
DISC BRAKES 45
DRUM BRAKES 55
GENERAL INFORMATION 1

page

MASTER CYLINDER—COMBINATION VALVE .. 15
PARKING BRAKES 60
POWER BRAKE BOOSTER—BRAKE PEDAL—
BRAKELIGHT SWITCH 22
SERVICE BRAKE DIAGNOSIS 4
SPECIFICATIONS 70

GENERAL INFORMATION

INDEX

page

Antilock Brakes (ABS) 1
Brake Components 1
Brake Fluid/Lubricants/Cleaning Solvents 2
Brake Safety Precautions 2

page

Brake Warning Lights 1
Brakelining Material 1
Jeep Body Code Letters 2

BRAKE COMPONENTS

Power assist front disc and rear drum brakes are standard on Cherokee/Wrangler models. Disc brake components consist of single piston calipers and ventilated rotors. Rear drum brakes are dual shoe units with cast brake drums.

The parking brake mechanism is lever and cable operated. The cables are attached to levers on the rear drum brake secondary shoes. The parking brakes are operated by a foot pedal on YJ models and a hand lever on XJ models.

A 205 mm dual diaphragm vacuum power brake booster is used for all applications. Two master cylinders are used; 4-cylinder YJ models have a one-piece master cylinder. All other models have a two-piece master cylinder with plastic reservoir.

All models are equipped with a combination valve. The valve contains a pressure differential valve and switch and a fixed rate rear proportioning valve.

BRAKELINING MATERIAL

Factory brakelining on all models consists of an organic base material combined with metallic particles. The lining does not contain asbestos.

BRAKE WARNING LIGHTS

Cherokee/Wrangler models are equipped with one or two brake warning lights. A red warning light is standard on all models. An amber light is added on models with ABS brakes. Both lights are located in the instrument panel.

The red light is in circuit with the pressure differential switch (in the combination valve), and with the parking brake switch. The light alerts the driver when the parking brakes are applied, or when a pressure differential exists between the front and rear hydraulic systems. The light also illuminates for a few seconds at start up as part of a bulb check.

The ABS warning light is amber in color and is located in the same side of the instrument cluster as the red warning light. The amber light only illuminates when an ABS circuit fault occurs.

ANTILOCK BRAKES (ABS)

An antilock brake system (ABS) is available on Cherokee/Wrangler models as an option. The system is an electronically operated, all-wheel brake control system. The ABS system is designed to prevent wheel lockup during periods of high wheel slip braking. Refer to the antilock brake section for operation and service information.

ABS SYSTEM CHANGES

A different master cylinder, power brake booster, and HCU are used in the 1995 Jeep ABS system.

The master cylinder reservoir has a single filler cap and is no longer interconnected with the HCU. The new HCU has built-in accumulators. The pedal travel sensor has been eliminated and a new dual diaphragm power brake booster is used.

BRAKE FLUID/LUBRICANTS/CLEANING SOLVENTS

Recommended fluid for all Jeep vehicles is Mopar DOT 3 brake fluid, or an equivalent meeting SAE J1703 and DOT 3 standards.

Use Mopar Multi Mileage grease to lubricate drum brake pivot pins and rear brakeshoe contact points on the support plates. Use GE 661, or Dow 111 silicone grease on caliper bushings and mounting bolts.

Use fresh brake fluid or Mopar brake cleaner to clean or flush brake system components. These are the only cleaning materials recommended.

CAUTION: Never use gasoline, kerosene, methyl or isopropyl alcohol, paint thinner, or any fluid containing mineral oil to clean brake parts. These fluids damage rubber cups and seals. If system contamination is suspected, check the fluid for dirt, discoloration, or separation into distinct layers. Drain and flush the system with new brake fluid if contamination is suspected.

JEEP BODY CODE LETTERS

The body/model identification code letters for Jeep vehicles are as follows:

- Code letters XJ: Cherokee
- Code letters YJ: Wrangler/YJ

The code letters are used throughout this group to simplify model identification and component application.

BRAKE SAFETY PRECAUTIONS

WARNING: ALTHOUGH FACTORY INSTALLED BRAKELINING ON JEEP VEHICLES IS MADE FROM ASBESTOS FREE MATERIALS, SOME AFTER MARKET BRAKELINING MAY CONTAIN ASBESTOS. THIS SHOULD BE TAKEN INTO ACCOUNT WHEN REPAIRING A VEHICLE WITH PRIOR BRAKE SERVICE. WEAR A RESPIRATOR WHEN CLEANING BRAKE COMPONENTS AS ASBESTOS FIBERS CAN BE A HEALTH HAZARD. NEVER CLEAN WHEEL BRAKE COMPONENTS WITH COMPRESSED AIR. USE A VACUUM CLEANER SPECIFICALLY DESIGNED FOR REMOVING BRAKE DUST. IF A VACUUM CLEANER IS NOT AVAILABLE, CLEAN THE PARTS WITH WATER DAMPENED SHOP RAGS. DO NOT CREATE DUST BY SANDING BRAKELINING. DISPOSE OF ALL DUST AND DIRT SUSPECTED OF CONTAINING ASBESTOS FIBERS IN SEALED BAGS OR CONTAINERS. FOLLOW ALL SAFETY PRACTICES RECOMMENDED BY THE OCCUPATIONAL SAFETY AND HEALTH ADMINISTRATION (OSHA) AND THE ENVIRONMENTAL PROTECTION AGENCY (EPA), FOR HANDLING AND DISPOSAL OF ASBESTOS.

ABS BRAKE DIAGNOSIS

INDEX

page

ABS Diagnostic Connector 3
ABS Warning Light Display 3
Antilock ECU and Hcu Diagnosis 3
DRB Scan Tool 3
General Information 3
Normal Operating Conditions 3
Wheel/Tire Size and Input Signals 3

GENERAL INFORMATION

The DRB scan tool is required for ABS diagnosis. The scan tool is used to identify ABS circuit faults.

Once a faulty circuit has been identified, refer to the appropriate chassis/body diagnostic manual for individual component testing.

ABS WARNING LIGHT DISPLAY

The amber antilock light illuminates at startup as part of the system self check feature. The light illuminates for 2-3 seconds then goes off as part of the normal check routine.

An ABS circuit fault is indicated when the amber light remains on after startup, or illuminates during vehicle operation.

Verify that a fault is actually related to the ABS system before making repairs. For example, if the red warning illuminates but the ABS light does not, the problem is related to a service brake component and not the ABS system. Or, if neither light illuminates but a brake problem is noted, again, the problem is with a service brake component and not with the ABS system.

ABS DIAGNOSTIC CONNECTOR

The ABS diagnostic connector is inside the vehicle. The connector is the access point for the DRB scan tool.

On XJ models, the connector is located under the instrument panel to the right of the steering column. On some models, the connecter may be tucked under the carpeting on the transmission tunnel. The connecter is a black, 6-way type.

On YJ models, the connector is under the instrument panel by the the driver side kick panel. The connecter is a black, 6 or 8-way type.

The DRB scan tool kit contains adapter cords for both types of connecter. Use the appropriate cord for test hookup.

DRB SCAN TOOL

ABS diagnosis is performed with the DRB scan tool. Refer to the DRB scan tool manual for test hookup and procedures. Diagnosis information is provided in the appropriate chassis/body diagnostic manual.

WHEEL/TIRE SIZE AND INPUT SIGNALS

Antilock system operation is dependant on accurate signals from the wheel speed sensors. Ideally, the vehicle wheels and tires should all be the same size and type. However, the Jeep ABS system is designed to operate with a compact spare tire installed.

NORMAL OPERATING CONDITIONS

Sound Levels

The hydraulic control unit pump and solenoid valves may produce some sound as they cycle on and off. This is a normal condition and should not be mistaken for faulty operation. Under most conditions, pump and solenoid valve operating sounds will not be audible.

Vehicle Response In Antilock Mode

During antilock braking, the hydraulic control unit solenoid valves cycle rapidly in response to antilock electronic control unit signals.

The driver will experience a pulsing sensation within the vehicle as the solenoids decrease, hold, or increase pressure as needed. Brake pedal pulsing will also be noted and is a **normal condition.**

Steering Response

A modest amount of steering input is required during extremely high deceleration braking, or when braking on differing traction surfaces. An example of differing traction surfaces would be when the left side wheels are on ice and the right side wheels are on dry pavement.

Owner Induced Faults

Driving away with the parking brakes still applied will cause warning light illumination. Pumping the brake pedal will also generate a system fault and interfere with ABS system operation.

ANTILOCK ECU AND HCU DIAGNOSIS

An ECU or HCU fault can only be determined through testing with the DRB scan tool. Do not replace either component unless a fault is actually indicated.

SERVICE BRAKE DIAGNOSIS

INDEX

	page
Brake Drag	6
Brake Fade	6
Brake Fluid Contamination	7
Brake Noise	7
Brake Pull	6
Brake Warning Light Operation	5
Brakes Do Not Hold After Driving Through Deep Water Puddles	7
Component Inspection	5
Contaminated Brakelining	7
Diagnosing Parking Brake Malfunctions	8
Diagnosis Procedures	4
General Information	4
Hard Pedal or High Pedal Effort	6
Low Pedal	5
Master Cylinder/Power Booster Test	8
Pedal Falls Away	5
Pedal Pulsation (Non-ABS Brakes Only)	6
Power Booster Check Valve Test	9
Power Booster Vacuum Test	9
Preliminary Brake Check	4
Rear Brake Grab	7
Road Testing	5
Spongy Pedal	5
Wheel and Tire Problems	7

GENERAL INFORMATION

The diagnosis information in this section covers service brake components which include:

- disc brake calipers
- disc brakeshoes
- drum brake wheel cylinders
- drum brakeshoes and brake drums
- drum brake support plates
- parking brake mechanism
- master cylinder/combination valve
- vacuum power brake booster
- brake pedal and brakelight switch
- brake warning light

DIAGNOSIS PROCEDURES

Service brake diagnosis involves determining if a problem is related to a mechanical, hydraulic or vacuum operated component. A preliminary brake check, followed by road testing and component inspection are needed to determine a problem cause.

Road testing will either verify proper brake operation or confirm the existence of a problem. Component inspection will, in most cases, identify the actual part responsible for a problem.

The first diagnosis step is the preliminary brake check. This involves inspecting fluid level, parking brake action, wheel and tire condition, checking for obvious leaks or component damage and testing brake pedal response. A road test will confirm or deny the existence of a problem. The final diagnosis procedure involves road test analysis and a visual inspection of brake components.

PRELIMINARY BRAKE CHECK

(1) If amber ABS light is illuminated, refer to ABS Brake System Diagnosis. If red warning light is illuminated, or if neither warning light is illuminated, continue with brake check.

(2) Inspect condition of tires and wheels. Damaged wheels and worn, damaged, or underinflated tires can cause pull, shudder, tramp and a condition similar to grab.

(3) If complaint was based on noise when braking, check suspension components. Jounce front and rear of vehicle and listen for noise that might be caused by loose, worn, or damaged suspension or steering components.

(4) Inspect brake fluid level:

(a) If vehicle has one-piece master cylinder, fluid level should be within 6 mm (1/4 in.) of reservoir rim.

(b) If vehicle has nylon reservoir with single filler cap, correct level is to FULL mark on side of reservoir. Acceptable level is between FULL and ADD marks.

(c) Remember that fluid level in the reservoir compartments will decrease in proportion to normal lining wear. However, if fluid level is abnormally low, look for leaks at calipers, wheel cylinders, brakelines and master cylinder.

(5) Inspect brake fluid condition:

(a) Fluid should be free of foreign material. **Note that brake fluid tends to darken over time. This is normal and should not be mistaken for contamination. If fluid is clear of foreign material, it is OK.**

(b) If fluid is highly discolored, or appears to contain foreign material, drain out a sample with a clean suction gun. Pour sample in a glass container and note condition described in step (c).

(c) If fluid separates into layers, obviously contains oil, or a substance other than brake fluid, system seals and cups will have to be replaced and hydraulic system flushed.

(6) Check parking brake operation. Verify free movement and full release of cables and foot pedal or

hand lever. Also note if vehicle was being operated with parking brake partially applied (this will cause red light to remain on).

(7) Check brake pedal operation. Verify that pedal does not bind and has adequate free play. If pedal lacks free play, check pedal and power booster for being loose or for bind condition. Do not road test until condition is corrected.

(8) If components inspected look OK, road test vehicle.

ROAD TESTING

(1) If amber warning light is on, problem is with antilock system component. Refer to antilock diagnosis section.

(2) If red warning light is not on, proceed to step (4).

(3) If red warning light is on, proceed as follows:

(a) See if parking brakes are applied. If brakes are applied, release them and proceed to step (4).

(b) Note if brake pedal is abnormally low. If pedal is definitely low and red light is still on, check front/rear hydraulic circuits for leak. **Do not road test. Inspect and repair as needed.**

(4) Check brake pedal response with transmission in Neutral and engine running. Pedal should remain firm under steady foot pressure. If pedal falls away, do not road test as problem is in master cylinder, or HCU on ABS models. If pedal holds firm, proceed to next step.

(5) During road test, make normal and firm brake stops in 25-35 mph range. Note faulty brake operation such as hard pedal, pull, grab, drag, noise, fade, etc.

(6) Return to shop and inspect brake components. Refer to inspection and diagnosis information.

COMPONENT INSPECTION

Fluid leak points and dragging brake units can usually be located without removing any components. The area around a leak point will be wet with fluid. The components at a dragging brake unit (wheel, tire, rotor) will be quite warm or hot to the touch.

Other brake problem conditions will require component removal for proper inspection. Raise the vehicle and remove the necessary wheels for better visual access.

During component inspection, pay particular attention to heavily rusted/corroded brake components (e.g. rotors, caliper pistons, brake return/holddown springs, support plates, etc.).

Heavy accumulations of rust may be covering severe damage to a brake component. It is wise to remove surface rust in order to accurately determine the depth of rust penetration and damage. Light surface rust is fairly normal and not a major concern (as long as it is removed). However, heavy rust buildup, especially on high mileage vehicles may cover structural damage to such important components as brakelines, rotors, support plates, and brake boosters. Refer to the wheel brake service procedures in this group for more information.

BRAKE WARNING LIGHT OPERATION

The red brake warning light will illuminate under the following conditions:

- for 2-3 seconds at startup as part of normal bulb check
- when parking brakes are applied
- low pedal caused by leak in front/rear brake hydraulic circuit

If the red light remains on after startup, first verify that the parking brakes are fully released. Then check pedal action and fluid level. A red light plus low pedal indicates the pressure differential switch and valve have been actuated due to a system leak.

On models with ABS brakes, the amber warning light only illuminates when an ABS malfunction has occurred. The ABS light operates independently of the red warning light.

PEDAL FALLS AWAY

A brake pedal that falls away under steady foot pressure is generally the result of a system leak. The leak point could be at a brakeline, fitting, hose, wheel cylinder, or caliper. Internal leakage in the master cylinder caused by worn or damaged piston cups, may also be the problem cause.

If leakage is severe, fluid will be evident at or around the leaking component. However internal leakage in the master cylinder will not be physically evident. Refer to the cylinder test procedure at the end of this section.

LOW PEDAL

If a low pedal is experienced, pump the pedal several times. If the pedal comes back up, worn lining and worn rotors or drums are the most likely causes. However, if the pedal remains low and the red warning light is on, the likely cause is a leak in the hydraulic system.

A decrease in master cylinder fluid level may only be the result of normal lining wear. Fluid level will drop somewhat as lining wear occurs. It is a result of the outward movement of caliper and wheel cylinder pistons to compensate for normal wear.

SPONGY PEDAL

Air in the system is the usual cause of a spongy pedal. Brake drums machined way beyond allowable limits (too thin), or substandard brake lines and hoses can also cause a condition similar to a spongy

pedal. The proper course of action is to bleed the system, or replace thin drums and suspect quality brake lines and hoses.

HARD PEDAL OR HIGH PEDAL EFFORT

A hard pedal or high pedal effort may be due to lining that is water soaked, contaminated, glazed, or badly worn. The power booster or check valve could also be faulty. Test the booster and valve as described in this section.

BRAKE DRAG

Brake drag occurs when the lining is in constant contact with the rotor or drum. Drag can occur at one wheel, all wheels, fronts only, or rears only. It is a product of incomplete brakeshoe release. Drag can be minor or severe enough to overheat the linings, rotors and drums. A drag condition also worsens as temperature of the brake parts increases.

Brake drag also has a direct effect on fuel economy. If undetected, minor brake drag can be misdiagnosed as an engine or transmission/torque converter problem.

Minor drag will usually cause slight surface charring of the lining. It can also generate hard spots in rotors and drums from the overheat/cool down process. In most cases, the rotors, drums, wheels and tires are quite warm to the touch after the vehicle is stopped.

Severe drag can char the brake lining all the way through. It can also distort and score rotors and drums to the point of replacement. The wheels, tires and brake components will be extremely hot. In severe cases, the lining may generate smoke as it chars from overheating.

An additional cause of drag involves the use of incorrect length caliper mounting bolts. Bolts that are too long can cause a partial apply condition. The correct caliper bolts have a shank length of 67 mm (2.637 in.), plus or minus 0.6 mm (0.0236 in.). Refer to the Disc Brake service section for more detail on caliper bolt dimensions and identification.

Some common causes of brake drag are:

- loose or damaged wheel bearing
- seized or sticking caliper or wheel cylinder piston
- caliper binding on bolts or slide surfaces
- wrong length caliper mounting bolts (too long)
- loose caliper mounting bracket
- distorted rotor, brake drum, or shoes
- brakeshoes binding on worn/damaged support plates
- severely rusted/corroded components
- misassembled components.

If brake drag occurs at all wheels, the problem may be related to a blocked master cylinder compensator port or faulty power booster (binds-does not release). The condition will worsen as brake temperature increases.

The brakelight switch can also be a cause of drag. An improperly mounted or adjusted brakelight switch can prevent full brake pedal return. The result will be the same as if the master cylinder compensator ports are blocked. The brakes would be partially applied causing drag.

BRAKE FADE

Brake fade is a product of overheating caused by brake drag. However, overheating and subsequent fade can also be caused by riding the brake pedal, making repeated high deceleration stops in a short time span, or constant braking on steep roads. Refer to the Brake Drag information in this section for causes.

PEDAL PULSATION (NON-ABS BRAKES ONLY)

Pedal pulsation is caused by parts that are loose, or beyond tolerance limits. This type of pulsation is constant and will occur every time the brakes are applied.

Disc brake rotors with excessive lateral runout or thickness variation, or out of round brake drums are the primary causes of pulsation.

On vehicles with ABS brakes, remember that pedal pulsation is normal during antilock mode brake stops. If pulsation occurs during light to moderate brake stops, a standard brake part is either loose, or worn beyond tolerance.

BRAKE PULL

A front pull condition could be the result of:

- contaminated lining in one caliper
- seized caliper piston
- binding caliper
- wrong caliper mounting bolts (too long)
- loose caliper
- loose or corroded mounting bolts
- improper brakeshoes
- damaged rotor
- incorrect wheel bearing adjustment (at one wheel)

A worn, damaged wheel bearing or suspension component are further causes of pull. A damaged front tire (bruised, ply separation) can also cause pull. Wrong caliper bolts (too long) will cause a partial apply condition and pull if only one caliper is involved.

A common and frequently misdiagnosed pull condition is where direction of pull changes after a few stops. The cause is a combination of brake drag followed by fade at the dragging brake unit.

As the dragging brake overheats, efficiency is so reduced that fade occurs. If the opposite brake unit is still functioning normally, its braking effect is magni-

fied. This causes pull to switch direction in favor of the brake unit that is functioning normally.

When diagnosing a change in pull condition, remember that pull will return to the original direction if the dragging brake unit is allowed to cool down (and is not seriously damaged).

REAR BRAKE GRAB

Rear grab (or pull) is usually caused by contaminated lining, bent or binding shoes and support plates, or improperly assembled components. This is particularly true when only one rear wheel is involved. However, when both rear wheels are affected, the master cylinder could be at fault.

BRAKES DO NOT HOLD AFTER DRIVING THROUGH DEEP WATER PUDDLES

This condition is caused by water soaked lining. If the lining is only wet, it can be dried by driving with the brakes lightly applied for a mile or two. However, if the lining is both wet and dirty, disassembly and cleaning will be necessary.

CONTAMINATED BRAKELINING

Brakelining contaminated by water is salvageable. The lining can either be air dried or dried using heat.

In cases where brakelining is contaminated by oil, grease, or brake fluid, the lining should be replaced. Replacement is especially necessary when fluids/lubricants have actually soaked into the lining material. However, grease or dirt that gets onto the lining surface (from handling) during brake repairs, can be cleaned off. Spray the lining surface clean with Mopar brake cleaner.

BRAKE FLUID CONTAMINATION

There are two basic causes of brake fluid contamination. The first involves allowing dirt, debris, or other materials to enter the cylinder reservoirs when the cover is off. The second involves adding non-recommended fluids to the cylinder reservoirs.

Brake fluid contaminated with only dirt, or debris usually retains a normal appearance. In some cases, the foreign material will remain suspended in the fluid and be visible. The fluid and foreign material can be removed from the reservoir with a suction gun but only if the brakes have not been applied. If the brakes are applied after contamination, system flushing will be required. The master cylinder may also have to be disassembled, cleaned and the piston seals replaced. Foreign material lodged in the reservoir compensator/return ports can cause brake drag by restricting fluid return after brake application.

Brake fluid contaminated by a non-recommended fluid may appear discolored, milky, oily looking, or foamy. However, remember that brake fluid will darken in time and occasionally be cloudy in appearance. These are normal conditions and should not be mistaken for contamination.

If some type of oil has been added to the system, the fluid will separate into distinct layers. To verify this, drain off a sample with a clean suction gun. Then pour the sample into a glass container and observe fluid action. If the fluid separates into distinct layers, it is definitely contaminated.

The only real correction for contamination by non-recommended fluid is to flush the entire hydraulic system and replace all the seals.

BRAKE NOISE

Squeak/Squeal

Factory installed brakelining is made from asbestos free materials. These materials have different operating characteristics than previous lining material. Under certain conditions, asbestos free lining may generate some squeak, groan or chirp noise. This noise is considered normal and does not indicate a problem. The only time inspection is necessary, is when noise becomes constant or when grinding, scraping noises occur.

Constant brake squeak or squeal may be due to linings that are wet or contaminated with brake fluid, grease, or oil. Glazed linings, rotors/drums with hard spots, and dirt/foreign material embedded in the brake lining also cause squeak. Loud squeak, squeal, scraping, or grinding sounds are a sign of severely worn brake lining. If the lining has worn completely through in spots, metal-to-metal contact occurs.

Thump/Clunk

Thumping or clunk noises during braking are frequently **not** caused by brake components. In many cases, such noises are caused by loose or damaged steering, suspension, or engine components. However, calipers that bind on the slide surfaces can generate a thump or clunk noise. In addition, worn out, improperly adjusted, or improperly assembled rear brakeshoes can also produce a thump noise.

Chatter/Shudder

Brake chatter, or shudder is usually caused by loose or worn components, or glazed/burnt lining. Rotors with hard spots can also contribute to chatter. Additional causes of chatter are out of tolerance rotors, brake lining not securely attached to the shoes, loose wheel bearings and contaminated brake lining.

WHEEL AND TIRE PROBLEMS

Some conditions attributed to brake components may actually be caused by a wheel or tire problem.

A damaged wheel can cause shudder, vibration and pull. A worn or damaged tire can also cause pull.

Severely worn tires with very little tread left can

produce a condition similar to grab as the tire loses and recovers traction.

Flat-spotted tires can cause vibration and wheel tramp and generate shudder during brake operation.

A tire with internal damage such as a severe bruise or ply separation can cause vibration and pull. The pull will be magnified when braking.

DIAGNOSING PARKING BRAKE MALFUNCTIONS

Adjustment Mechanism

Parking brake adjustment is controlled by a cable tensioner mechanism. The cable tensioner, once adjusted at the factory, will not need further attention under normal circumstances. There are only two instances when adjustment is required. The first is when a new tensioner, or cables have been installed. And the second, is when the tensioner and cables are disconnected for access to other brake components.

Parking Brake Switch And Warning Light Illumination

The parking brake switch on the lever, or foot pedal, is in circuit with the red warning light. The switch will illuminate the red light only when the parking brakes are applied. If the light remains on after parking brake release, the switch or wires are faulty, or cable tensioner adjustment is incorrect.

If the red light comes on while the vehicle is in motion and brake pedal height decreases, a fault has occurred in the front or rear brake hydraulic system.

Parking Brake problem Causes

In most cases, the actual cause of an improperly functioning parking brake (too loose/too tight/wont hold), can be traced to a drum brake component.

The leading cause of improper parking brake operation, is excessive clearance between the brakeshoes and the drum surface. Excessive clearance is a result of: lining and/or drum wear; oversize drums; or inoperative shoe adjuster components.

Excessive parking brake lever travel (sometimes described as a loose lever or too loose condition), is the result of worn brakeshoes/drums, improper brakeshoe adjustment, or incorrectly assembled brake parts.

A “too loose” condition can also be caused by inoperative brakeshoe adjusters. If the adjusters are misassembled, they will not function. In addition, since the adjuster mechanism only works during reverse stops, it is important that complete stops be made. The adjuster mechanism does not operate when rolling stops are made in reverse. The vehicle must be brought to a complete halt before the adjuster lever will turn the adjuster screw.

A condition where the parking brakes do not hold, will most probably be due to a wheel brake component.

Items to look for when diagnosing a parking brake problem, are:

- rear brakeshoe wear or adjuster problem
- rear brake drum wear
- brake drums machined beyond allowable diameter (oversize)
- parking brake front cable not secured to lever
- parking brake rear cable seized
- parking brake strut reversed
- parking brake strut not seated in both shoes
- parking brake lever not seated in secondary shoe
- parking brake lever or brakeshoe bind on support plate
- brakeshoes reversed
- adjuster screws seized
- adjuster screws reversed
- holddown or return springs misassembled or lack tension
- wheel cylinder pistons seized

Brake drums that are machined oversize are difficult to identify without inspection. If oversize drums are suspected, diameter of the braking surface will have to be checked with an accurate drum gauge. Oversize drums will cause low brake pedal and lack of parking brake holding ability.

Improper parking brake strut and lever installation will result in unsatisfactory parking brake operation. Intermixing the adjuster screws will cause drag, bind and pull along with poor parking brake operation.

Parking brake adjustment and parts replacement procedures are described in the Parking Brake section.

MASTER CYLINDER/POWER BOOSTER TEST

(1) Start engine and check booster vacuum hose connections. Hissing noise indicates vacuum leak. Correct any vacuum leak before proceeding.

(2) Stop engine and shift transmission into Neutral.

(3) Pump brake pedal until all vacuum reserve in booster is depleted.

(4) Press and hold brake pedal under light foot pressure.

(a) If pedal holds firm, proceed to step (5).

(b) If pedal does not hold firm and falls away, master cylinder is faulty due to internal leakage. Overhaul or replace cylinder.

(5) Start engine and note pedal action.

(a) If pedal falls away slightly under light foot pressure then holds firm, proceed to step (6).

(b) If no pedal action is discernible, or hard pedal is noted, power booster or vacuum check valve is faulty. Install known good check valve and repeat steps (2) through (5).

(6) Rebuild booster vacuum reserve as follows: Release brake pedal. Increase engine speed to 1500 rpm, close throttle and immediately turn off ignition.

(7) Wait a minimum of 90 seconds and try brake action again. Booster should provide two or more vacuum assisted pedal applications. If vacuum assist is not provided, perform booster and check valve vacuum tests.

POWER BOOSTER CHECK VALVE TEST

(1) Disconnect vacuum hose from check valve.

(2) Remove check valve and seal from booster (Fig. 1).

(3) Hand operated vacuum pump can be used for test (Fig. 2).

(4) Apply 15-20 inches vacuum at large end of check valve (Fig. 1).

(5) Vacuum should hold steady. If gauge on pump indicates any vacuum loss, valve is faulty and must be replaced.

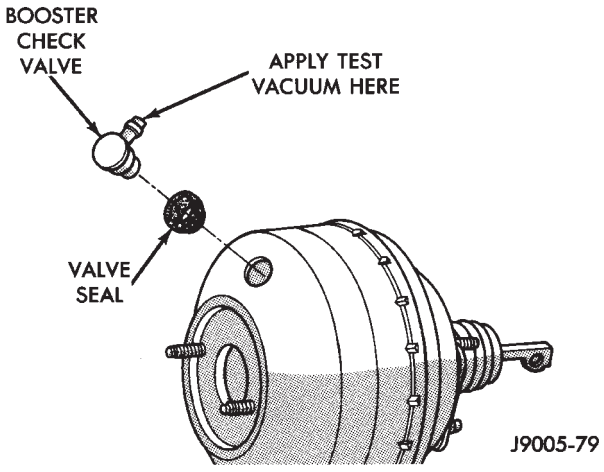

Fig. 1 Typical Vacuum Check Valve And Seal

POWER BOOSTER VACUUM TEST

(1) Connect a vacuum gauge to the booster check valve with a short length of hose and tee fitting (Fig. 3).

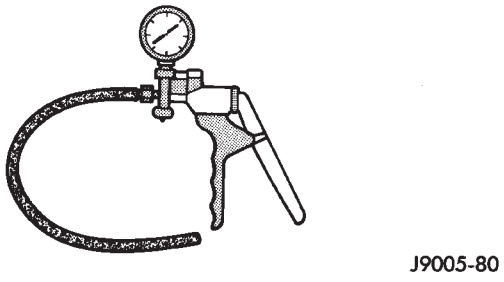

Fig. 2 Typical Hand Operated Vacuum Pump

(2) Start and run engine at idle speed for one minute.

(3) Pinch hose shut between vacuum source and check valve (Fig. 3).

(4) Stop engine and observe vacuum gauge.

(5) If vacuum drops more than one inch HG (33 millibars) within 15 seconds, booster diaphragm or check valve is faulty.

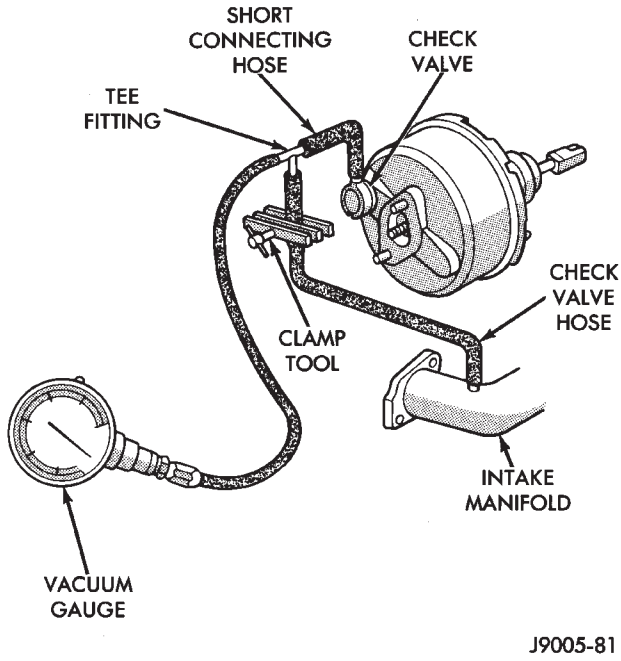

Fig. 3 Booster Vacuum Test Connections

BRAKE FLUID—BRAKE BLEEDING—BRAKELINES AND HOSES

INDEX

	page
Brake Bleeding (With ABS Brakes)	11
Brake Bleeding (With Standard Brakes)	11
Brake Bleeding Recommendations	10
Brake Fluid Contamination	10
Brake Fluid Level	10
Brakeline Charts	12
Brakelines and Hoses	12
Recommended Brake Fluid	10

RECOMMENDED BRAKE FLUID

Recommended brake fluid for Jeep vehicles is Mopar brake fluid, or an equivalent fluid meeting SAE J1703 and DOT 3 standards. The recommendation applies to models with standard or ABS brakes.

Use new brake fluid to top off the master cylinder or refill the system. Never use reclaimed fluid, fluid not meeting the SAE/DOT standards or fluid from an unsealed container. Do not use fluid from any container that has been left open for any length of time. Fluid in open containers can absorb moisture.

BRAKE FLUID LEVEL

Always clean the master cylinder reservoir and cover or cap before adding fluid. This avoids having dirt from the cap or reservoir exterior fall into the fluid.

If the vehicle has a one piece master cylinder, correct fluid level is to within 6 mm (1/4 in.) of the reservoir rim (Fig. 1).

If the vehicle has a plastic reservoir with a single cap, preferred fluid level is to the FULL mark (Fig. 2).

CAUTION: Do not allow brake fluid to contact painted surfaces. Fluid spills must be cleaned up immediately as brake fluid can loosen and lift paint.

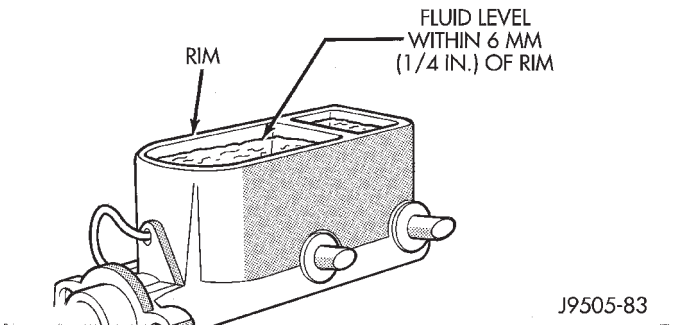

Fig. 1 Correct Fluid Level (4-Cylinder Models)

BRAKE FLUID CONTAMINATION

Oil in the fluid will cause brake system rubber seals to soften and swell. The seals may also become porous and begin to deteriorate.

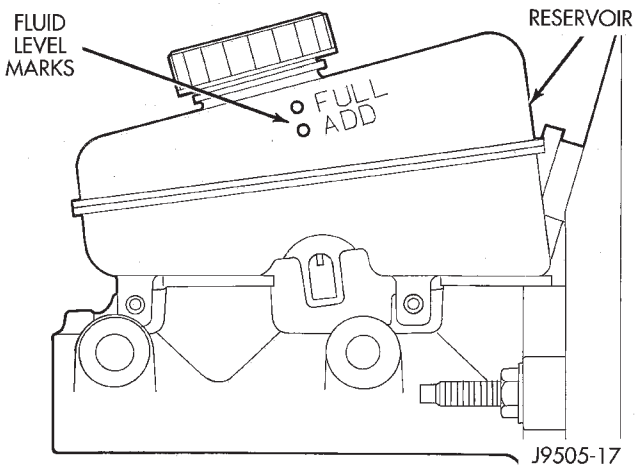

Fig. 2 Correct Fluid Level (All Except 4-Cylinder Models)

If fluid contamination is suspected, drain off a sample from the master cylinder. A suction gun or similar device can be used for this purpose.

Empty the drained fluid into a glass container. Contaminants in the fluid will cause the fluid to separate into distinct layers. If contamination has occurred, the system rubber seals, hoses and cups must be replaced and the system thoroughly flushed with clean brake fluid.

BRAKE BLEEDING RECOMMENDATIONS

- Use Mopar DOT 3 brake fluid, or an equivalent meeting SAE/DOT standards J1703-F and DOT 3, to fill and bleed the system.
- Bleeding can be performed manually, or with vacuum or pressure equipment. Vacuum and pressure bleeding equipment are both available. Both types are effective but should be used only as described in the manufacturers instructions.
- Do not allow the master cylinder to run out of fluid when bleeding the brakes. An empty cylinder will allow additional air to be drawn into the system. Check fluid level frequently during bleed operations.
- Do not pump the brake pedal at any time while bleeding. Air in system will be compressed into small

bubbles that are distributed throughout the hydraulic system. This will make extra bleeding operations necessary.

- Bleed only one wheel brake unit at a time and use a bleed hose to bleed each wheel brake unit (Fig. 3).
- Attach one end of bleed hose to the bleed screw and insert the opposite hose end in a glass container partially filled with brake fluid (Fig. 3). A glass container makes it easier to see air bubbles as they exit the bleed hose. Be sure the end of the bleed hose is immersed in fluid; this prevents air from being drawn back into cylinder and brakeline.

BRAKE BLEEDING (WITH STANDARD BRAKES)

(1) If master cylinder has been overhauled or a new cylinder will be installed, bleed cylinder on bench before installation. This shortens time needed to bleed system and ensures proper cylinder operation.

(2) Wipe master cylinder reservoir and cap clean with shop towels. Then fill cylinder reservoir with Mopar brake fluid.

(3) Open all caliper and wheel cylinder bleed screws. Close bleed screws after fluid begins flowing from each bleed screw.

(4) Top off master cylinder reservoir again.

(5) Bleed master cylinder and combination valve at brakeline fittings. Have helper operate brake pedal while bleeding cylinder and valve.

(6) Bleed wheel brakes in recommended sequence which is: right rear; left rear; right front; left front. Bleed procedure is as follows:

(a) Open caliper or wheel cylinder bleed fitting 1/2 to 3/4 turn.

(b) Have helper depress and hold brake pedal to floorpan.

(c) Tighten bleed fitting and have helper release brake pedal. Continue bleeding operation until fluid entering bleed container is clear and free of bubbles.

(d) Repeat bleeding operation at remaining wheel brake units.

(7) Top off master cylinder fluid level and verify proper brake operation before moving vehicle.

BRAKE BLEEDING (WITH ABS BRAKES)

ABS system bleeding requires conventional bleeding methods plus use of the DRB scan tool. The procedure involves performing a conventional bleed, followed by use of the scan tool to cycle and bleed the HCU pump and solenoids. A second conventional bleed procedure is then required remove any air remaining in the system.

(1) If a new master cylinder is to be installed, bleed cylinder on bench before installing it in vehicle. Refer to procedure in section covering master cylinder service.

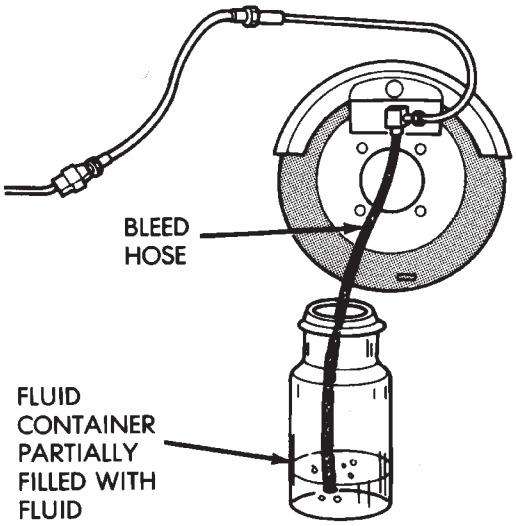

Fig. 3 Typical Bleed Hose And Fluid Container

(2) Wipe master cylinder reservoir and cap clean before removing cap. This avoids having dirt fall into fluid. Then fill reservoir with Mopar brake fluid.

(3) Perform conventional brake bleed as described in steps (4) and (5).

(4) Bleed master cylinder and combination valve at brakeline fittings. Have helper depress and release brake pedal while bleeding cylinder and valve.

(5) Bleed wheel brakes in recommended sequence which is: right rear; left rear; right front; left front. Bleed procedure is as follows:

(a) Attach bleed hose to caliper bleed screw. Immerse end of hose in glass container partially filled with brake fluid. Be sure hose end is submerged in fluid (Fig. 3).

(b) Have helper depress and hold brake pedal to floorpan.

(c) Open bleed screw 1/2 turn. Close bleed screw when brake pedal contacts floorpan. **Do not pump brake pedal at any time while bleeding. This compresses air into small bubbles which are distributed throughout system. Additional bleeding operations will then be necessary to remove all trapped air from the system.**

(d) Repeat bleeding operation at each wheel brake unit fluid entering glass container is free of air bubbles. Check reservoir fluid level frequently and add fluid if necessary.

(6) Perform HCU bleed procedure with DRB scan tool as follows:

(a) Connect scan tool to ABS diagnostic connector. Connector is under carpet at front of console, just under instrument panel center bezel.

(b) Select CHASSIS SYSTEM, followed by TEVES ABS BRAKES, then BLEED BRAKES. When scan tool displays TEST COMPLETE, dis-

connect scan tool and proceed to next step.

(7) **Repeat** conventional bleed procedure described in steps (4) and (5).

(8) Top off master cylinder fluid level and verify proper brake operation before moving vehicle.

BRAKELINES AND HOSES

Metal brakelines and rubber brake hoses should be inspected periodically and replaced if damaged.

Rubber brake hoses should be replaced if cut, cracked, swollen, or leaking. Rubber hoses must be replaced as they are not repairable.

Steel brakelines should be inspected any time the vehicle is in for normal maintenance. This is important on high mileage vehicles. It is especially important when the vehicle is operated on roads that are salted during winter months.

Heavily rusted/corroded brake rotors, drums, support plates, and brakelines should be cleaned and carefully inspected. Heavy rust buildup can hide severe damage to a component. Severely rusted parts should be replaced if condition is suspect.

BRAKELINE CHARTS

Brakeline routing and connections are displayed in Figures 4 through 10. Routing for both right hand drive (RHD) and left hand drive (LHD) models is provided.

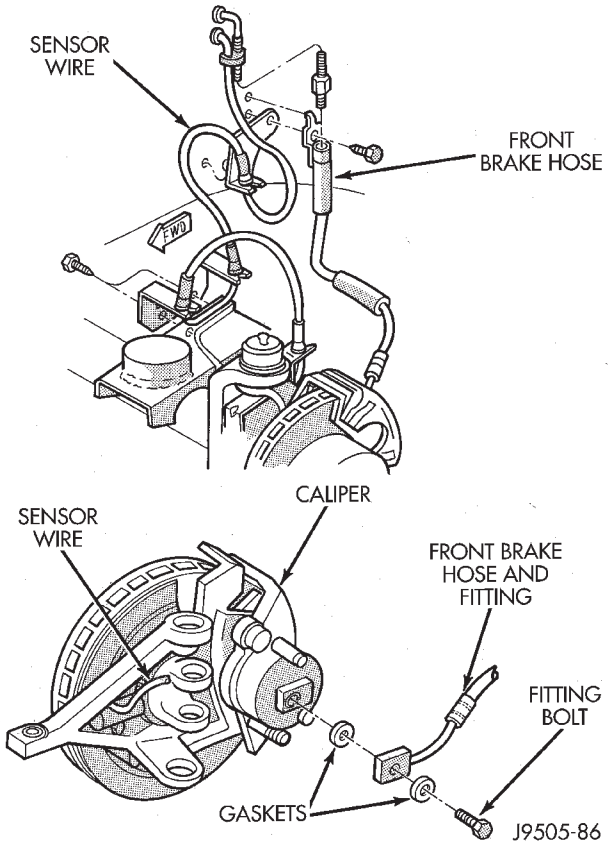

Fig. 5 Front Brake Hose And Sensor Wire Routing (RHD XJ With ABS)

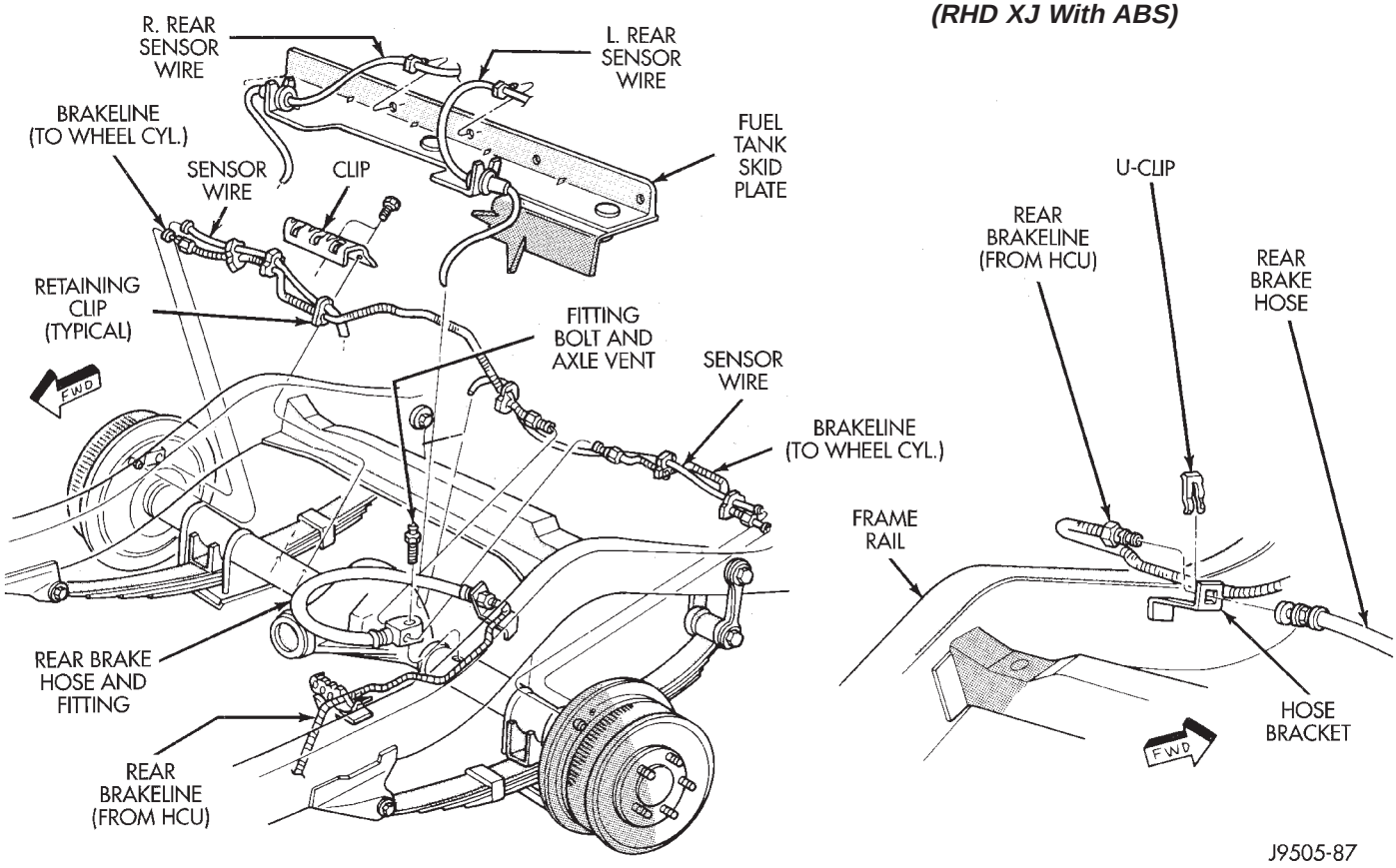

Fig. 4 Brakeline Routing (YJ With ABS)

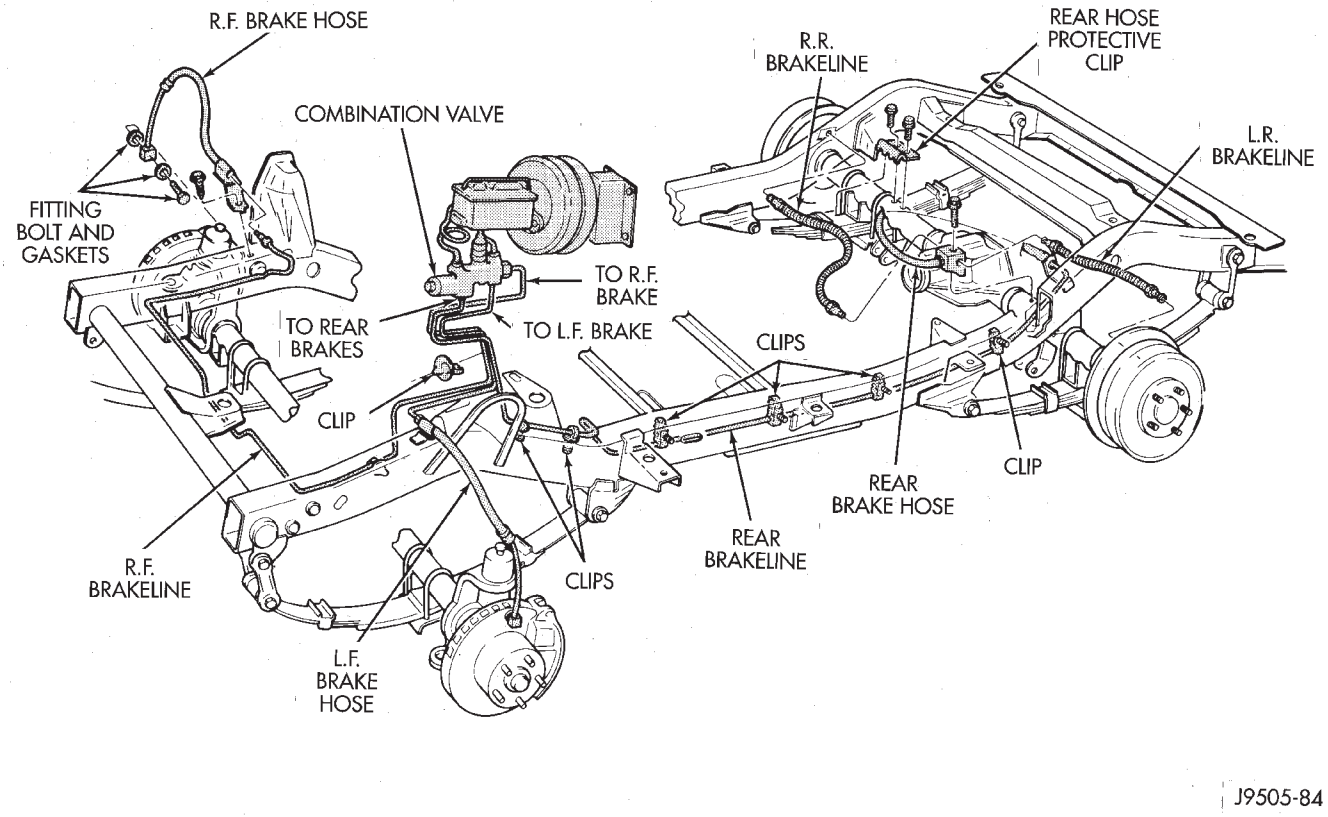

Fig. 6 Brakeline Routing (YJ With 4-Cylinder Engine)

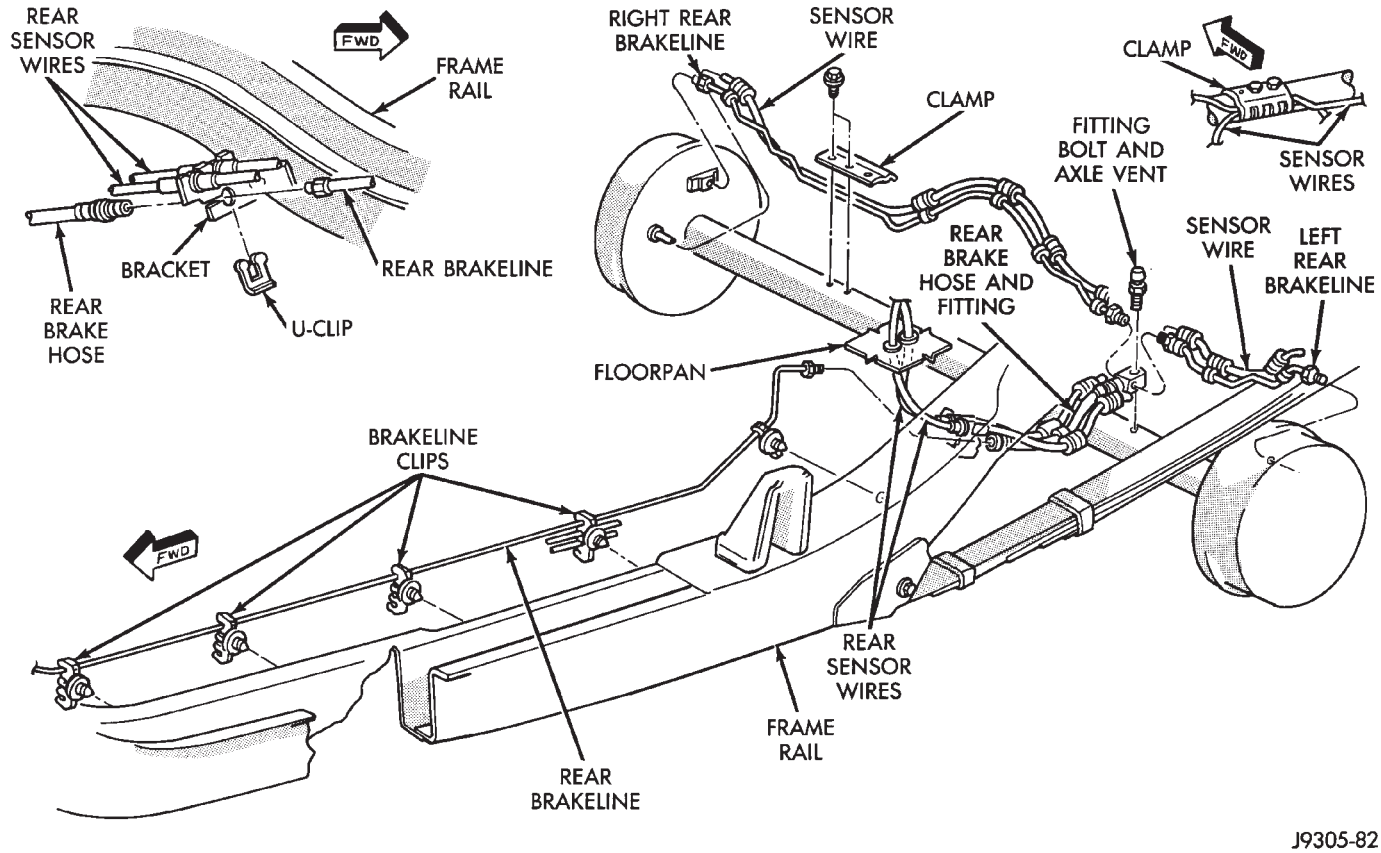

Fig. 7 Rear Brakeline Routing (XJ With ABS)

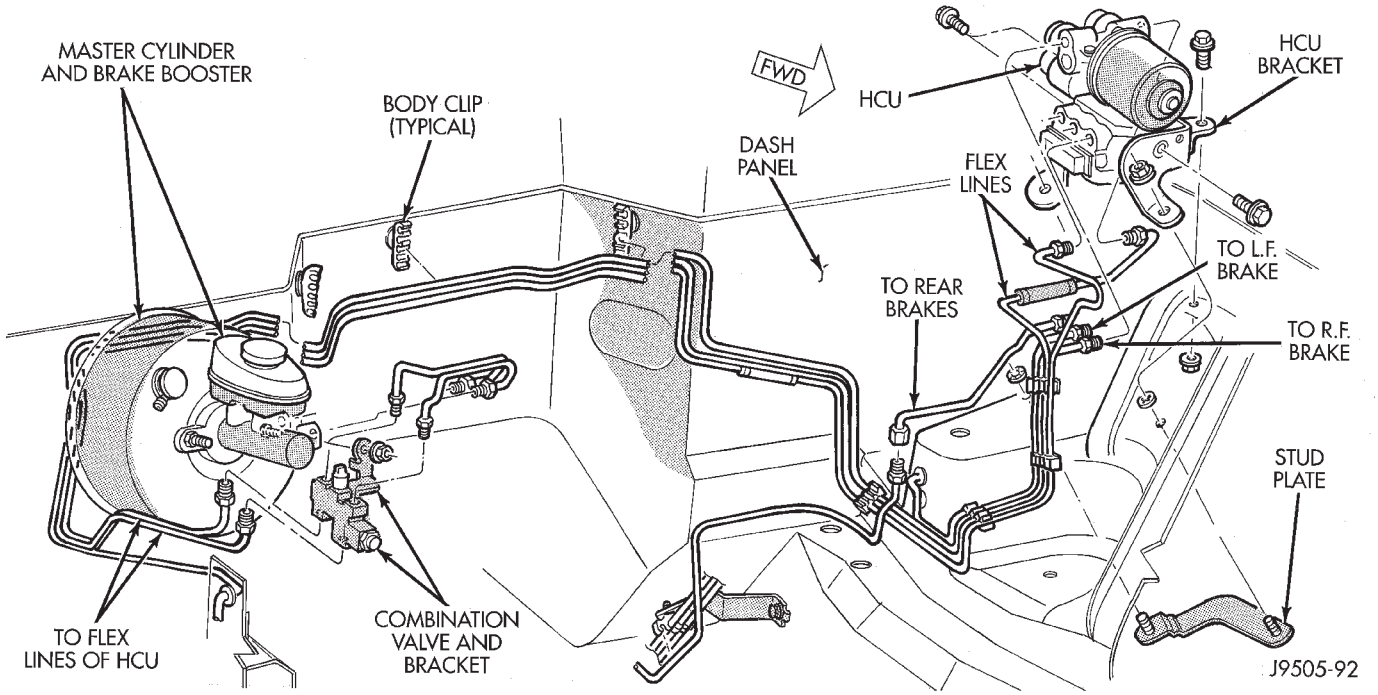

Fig. 8 Front Brakeline Routing (RHD XJ With ABS)

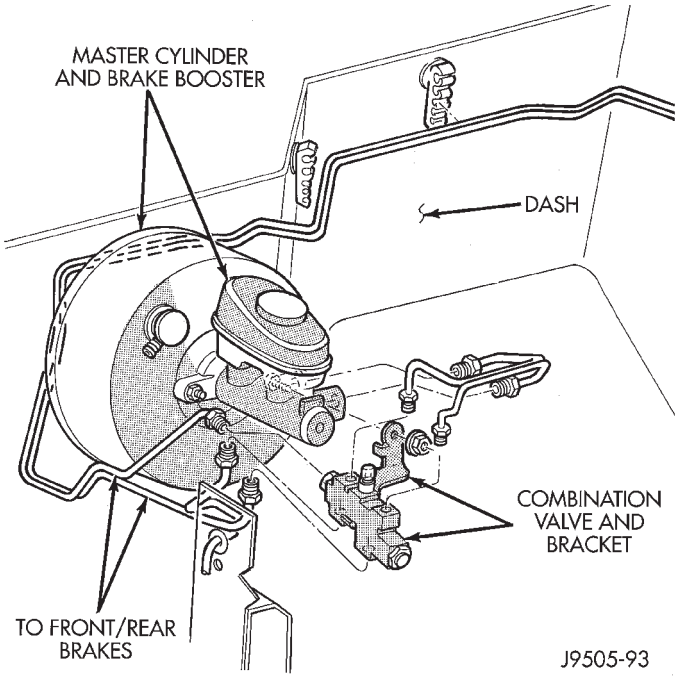

Fig. 9 Front Brakeline Routing (RHD XJ Without ABS)

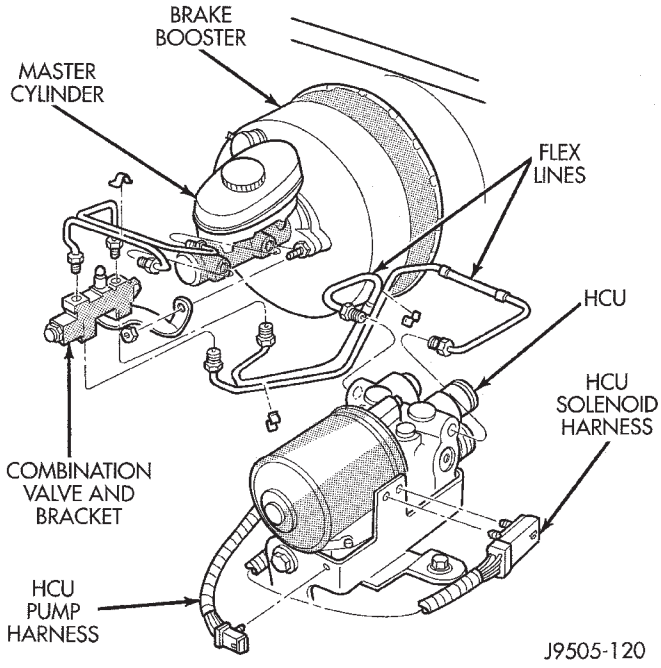

Fig. 10 Master Cylinder/Combination Valve Connection (RHD XJ With ABS)

MASTER CYLINDER—COMBINATION VALVE

INDEX

page

Combination Valve Replacement (Non-ABS) 16
General Service Information 15
Master Cylinder and Combination Valve Installation (With ABS) 20
Master Cylinder and Combination Valve Removal (With ABS) 17
Master Cylinder Bench Bleeding 21
Master Cylinder Installation (Non-ABS) 16
Master Cylinder Overhaul (4-Cylinder Models) 16
Master Cylinder Removal (Non-ABS) 15
Reservoir Replacement (2-Piece Master Cylinder) . 19

GENERAL SERVICE INFORMATION

Master Cylinder

Two different master cylinders are used. A one-piece cast aluminum cylinder is used on 4-cylinder YJ models (Fig. 1). All other models have a two-piece master cylinder with removable nylon reservoir (Fig. 2).

The two master cylinders are serviced differently. The reservoir and grommets are the only replaceable parts on the two-piece master cylinder. The one-piece master cylinder can be overhauled when necessary.

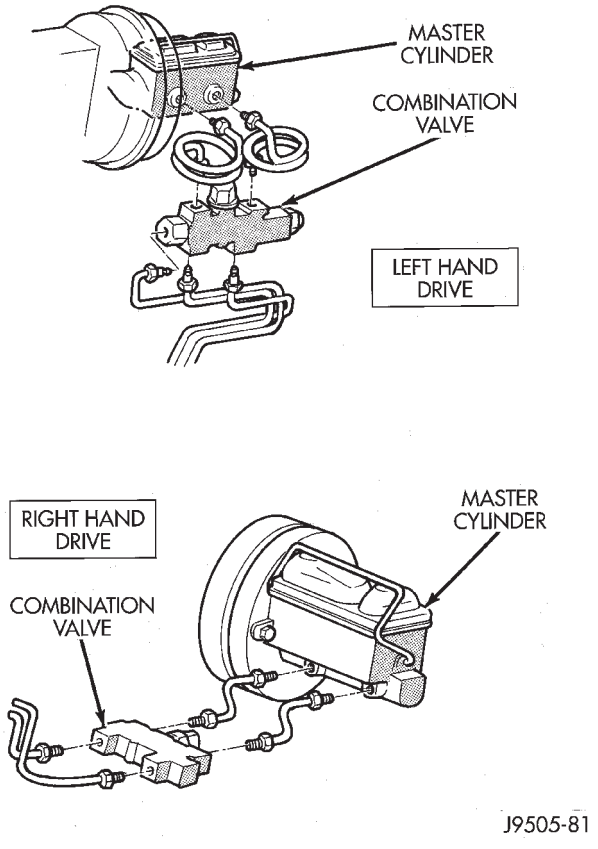

Fig. 1 Master Cylinder And Combination Valve (4-Cyl. YJ Models)

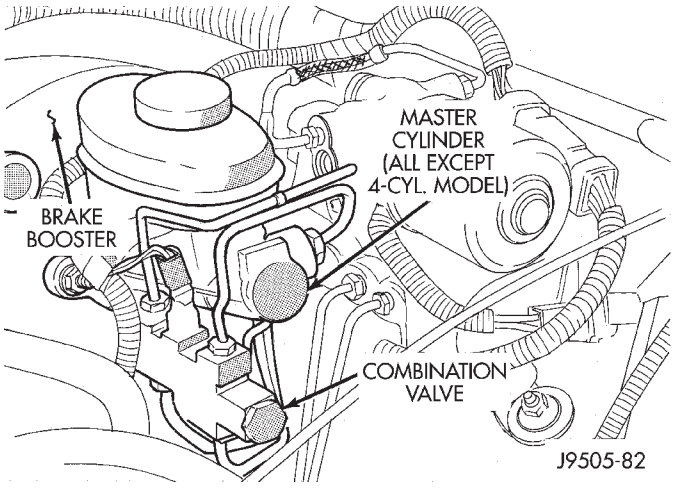

Fig. 2 Master Cylinder And Combination Valve (All Except 4-Cyl. YJ Models)

Combination Valve

A combination valve is used in all models. The valve contains a pressure differential valve and switch and a rear brake proportioning valve. The valve is not repairable. It must be replaced if diagnosis indicates this is necessary.

The pressure differential switch is connected to the brake warning light. The switch is actuated by movement of the switch valve. The switch monitors fluid pressure in the separate front/rear brake hydraulic circuits.

A decrease or loss of fluid pressure in either hydraulic circuit will cause the switch valve to shuttle to the low pressure side. Movement of the valve pushes the switch plunger upward. This action closes the switch internal contacts completing the electrical circuit to the red warning light. The switch valve will remain in an actuated position until repairs are made.

The rear proportioning valve is used to balance front-rear brake action. The valve allows normal fluid flow during moderate effort brake stops. The valve only controls (meters) fluid flow during high effort brake stops.

MASTER CYLINDER REMOVAL (NON-ABS)

(1) Remove air cleaner hose, cover and housing.

(2) Disconnect brake lines at master cylinder and combination valve.

(3) Remove nuts attaching master cylinder to booster studs.

(4) Remove master cylinder.

(5) Remove cylinder cover and drain fluid.

(6) If two-piece master cylinder reservoir requires service, refer to reservoir replacement procedure in this section.

MASTER CYLINDER INSTALLATION (NON-ABS)

(1) Bleed master cylinder on bench before installation. Refer to procedure in this section.

(2) If new two-piece master cylinder is being installed, remove plastic protective sleeve from primary piston shank. Also check condition of seal at rear of cylinder body. Reposition seal if dislodged. Replace seal if cut, or torn.

(3) Clean cylinder mounting surface of brake booster. Use shop towel wetted with brake cleaner for this purpose. Dirt, grease, or similar materials will prevent proper cylinder seating and could result in vacuum leak.

(4) Slide master cylinder onto brake booster studs.

(5) Install nuts attaching master cylinder to booster studs. Tighten nuts to 25 N·m (220 in. lbs.) torque.

(6) Connect brakelines to master cylinder and combination valve (Figs. 1 and 2).

(7) Fill and bleed brake system.

COMBINATION VALVE REPLACEMENT (NON-ABS)

The combination valve is not a repairable component. The valve is serviced as an assembly whenever diagnosis indicates replacement is necessary.

(1) Remove air cleaner cover and hose for access to valve, if necessary.

(2) Disconnect differential pressure switch wire at combination valve. Do not pull switch wire to disconnect. Unsnap connecter lock tabs to remove.

(3) Disconnect brakelines at combination valve and remove valve.

(4) Connect brakelines to replacement valve. Start line fittings by hand to avoid cross threading. Tighten fittings snug but not to required torque at this time.

(5) Connect wire to pressure differential switch.

(6) Bleed brakes.

(7) Tighten brakeline fittings to 18-24 N·m (160-210 in. lbs.) torque after bleeding.

MASTER CYLINDER OVERHAUL (4-CYLINDER MODELS)

CYLINDER DISASSEMBLY

(1) Examine cylinder cover seal. Discard seal if torn or distorted.

(2) Clamp cylinder in vise (Fig. 3).

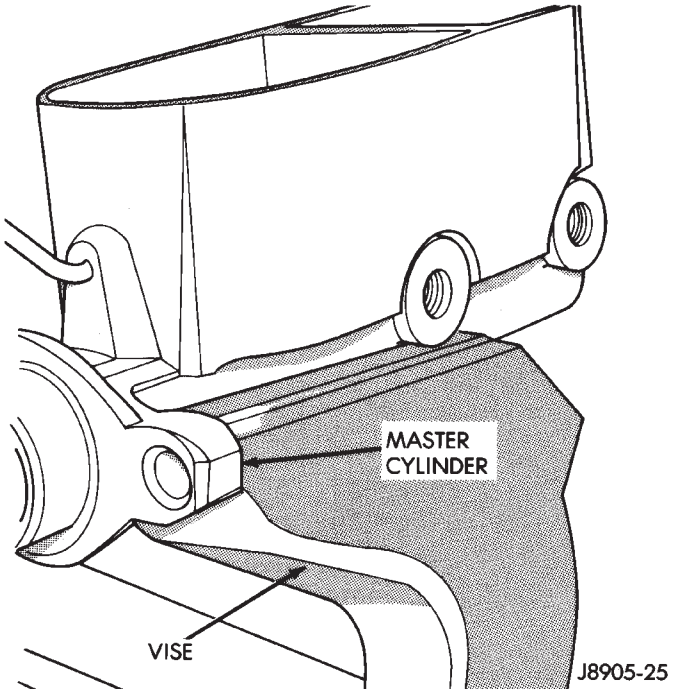

Fig. 3 Mounting Cylinder In Vise

(3) Remove piston retaining snap ring. Press and hold primary piston inward with wood dowel or similar tool. Then remove snap ring (Fig. 4).

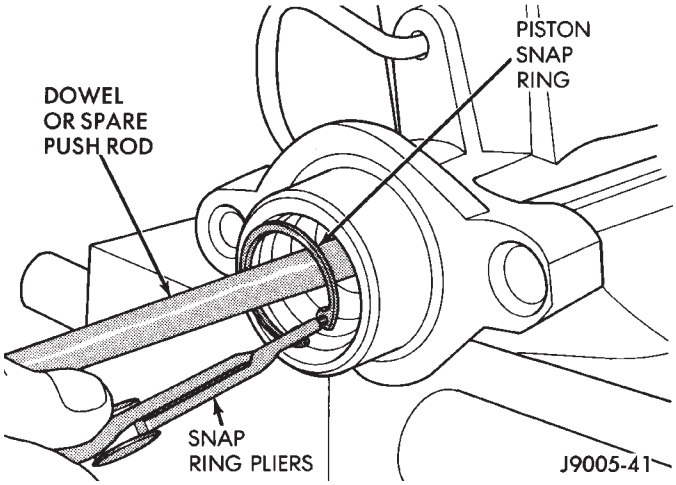

Fig. 4 Removing/Installing Piston Snap Ring

(4) Remove and discard primary piston (Fig. 5). Piston is serviced only as assembly.

(5) Remove secondary piston (Fig. 6). Apply air pressure through rear outlet port to ease piston out of bore. Cover small ports at bottom of rear reservoir with towel to prevent air leakage.

(6) Discard secondary piston. Do not disassemble piston as components are only serviced as assembly.

MASTER CYLINDER CLEANING AND INSPECTION

Clean the cylinder with Mopar brake cleaning solvent or clean brake fluid. Remove cleaning residue with compressed air.

Inspect the cylinder bore. A light discoloration of

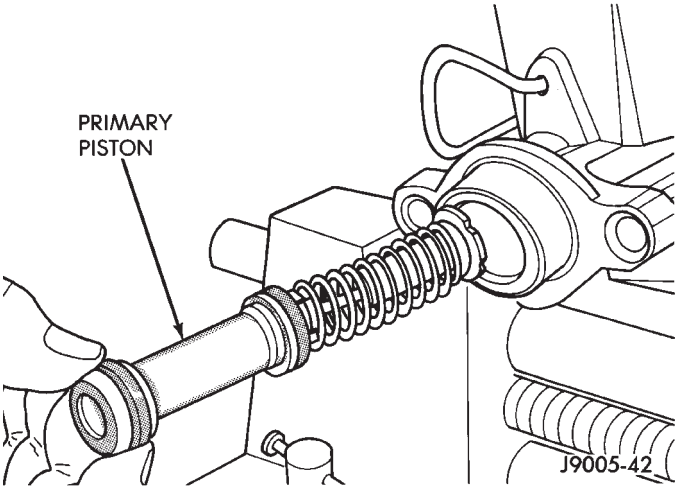

Fig. 5 Removing/Installing Primary Piston

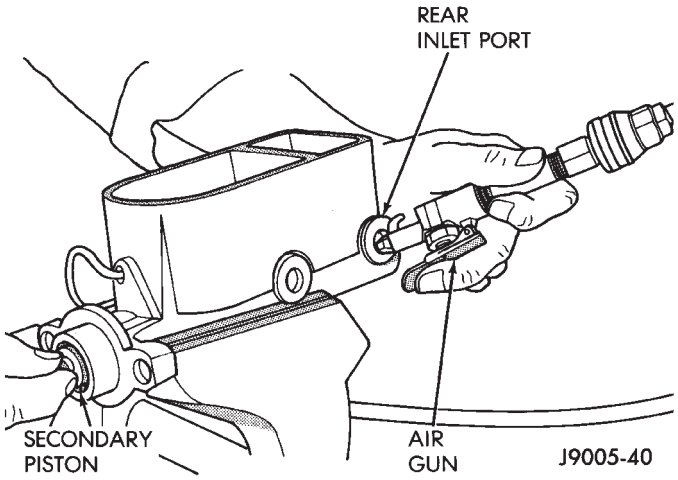

Fig. 6 Removing Secondary Piston Assembly

the bore surface is normal and acceptable but only if the surface is in good condition.

Replace the cylinder if the bore is scored, corroded, or pitted. **Do not hone the cylinder bore in an attempt to restore the surface. Replace the cylinder if the bore is corroded or if doubt exists about cylinder bore condition.**

Check the outer and inner surfaces of the cylinder for cracks or porosity, especially if wet spots were noted on the cylinder outer surface during removal and disassembly.

Inspect the cylinder cover, seal and retainer spring. Replace the seal if torn or distorted and replace the cover and spring if either part is bent or damaged in any way.

MASTER CYLINDER ASSEMBLY

(1) Coat cylinder bore and new piston assemblies with brake fluid.

(2) Install secondary piston in bore with push and turn motion (Fig. 7). **Do not use any tools to start seals into bore. Tools can cut seal and scratch bore.**

(3) Insert primary piston in bore (Fig. 5).

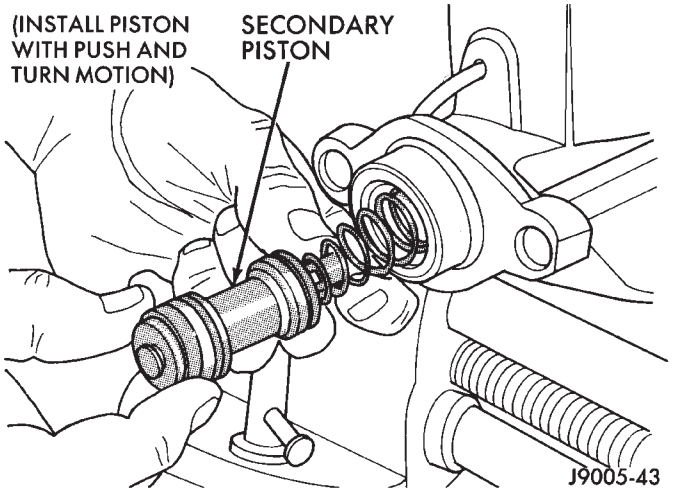

Fig. 7 Installing Secondary Piston

(4) Push primary piston inward and install snap ring (Fig. 4).

MASTER CYLINDER AND COMBINATION VALVE REMOVAL (WITH ABS)

(1) Disconnect vent hoses at air cleaner cover.

(2) Loosen clamp securing air cleaner hose to intake manifold. Use screwdriver to tap clamp loose.

(3) Remove air cleaner cover and hose. Then remove air filter from air cleaner housing (Fig. 8).

(4) Remove two bolts and one nut that secure air cleaner housing to body (Fig. 8).

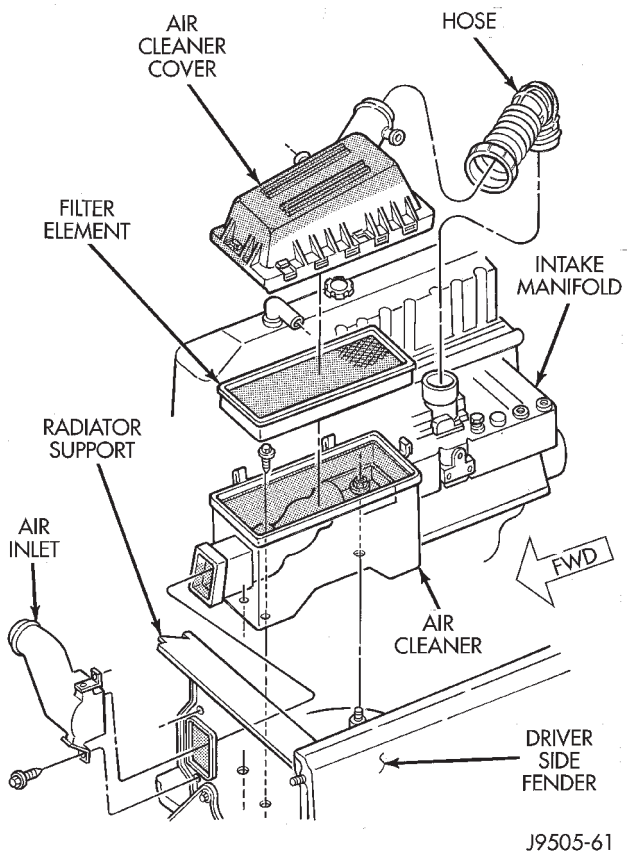

Fig. 8 Air Cleaner Components

(5) Remove air cleaner housing from engine compartment.

(6) Disconnect wire from combination valve pressure differential switch (Fig. 9). Do not pull wire to disconnect. Unsnap lock tabs on wire connecter.

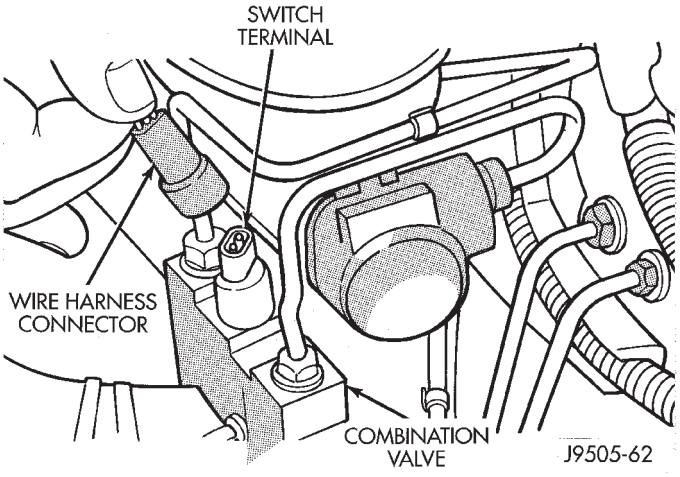

Fig. 9 Pressure Differential Switch Wire Connection

(7) Disconnect canister vacuum line at manifold fitting (Fig. 10).

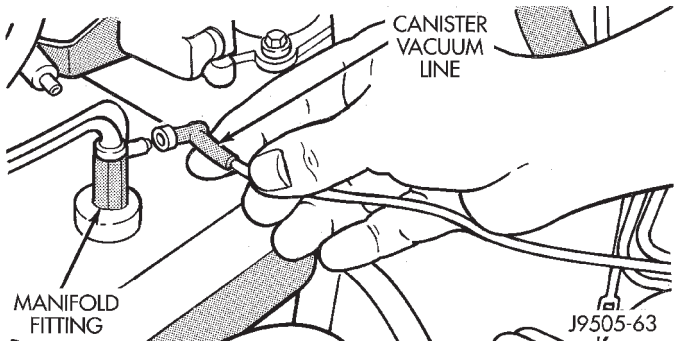

Fig. 10 Canister Vacuum Line Location (At Manifold Fitting)

(8) Disconnect brake booster vacuum hose at intake manifold fitting (Fig. 11). Move hose aside for working clearance.

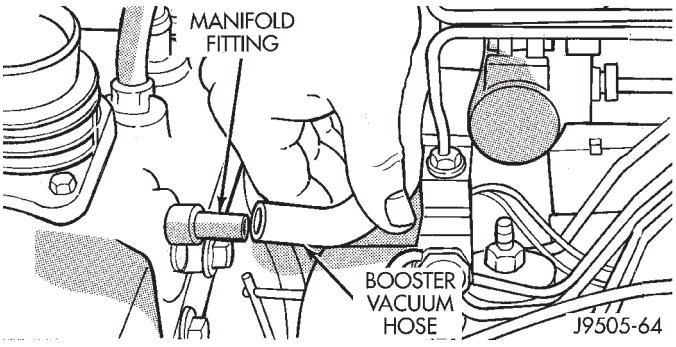

Fig. 11 Booster Vacuum Hose Removal/Installation (From Manifold Fitting)

(9) Unseat small S-clip that secures brakelines (Fig. 12).

(10) Remove brakeline that connects master cylinder front port to combination valve front port (Fig. 12).

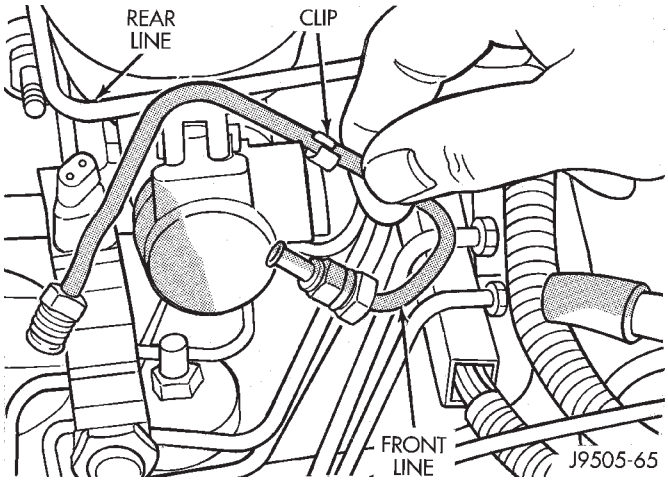

Fig. 12 Master Cylinder Front Brakeline Removal/ Installation

(11) Disconnect master cylinder rear brakeline at cylinder. Then loosen line at combination valve and swing line around to opposite side of cylinder (Fig. 13).

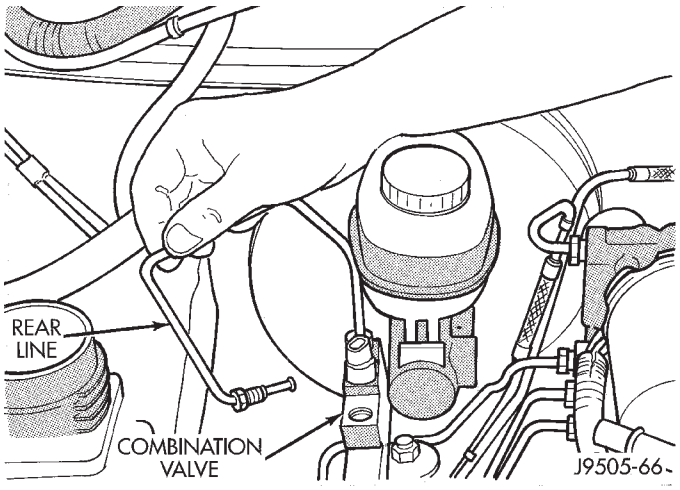

Fig. 13 Disconnecting Master Cylinder Rear Brakeline

(12) Disconnect rear brakeline at HCU (Fig. 14).

(13) Disconnect both flex brakelines at HCU (Fig. 14).

(14) Disconnect HCU line to rear brakes at HCU port (Fig. 14).

(15) Remove nut attaching combination valve bracket to brake booster stud.

(16) Remove combination valve and brakelines as assembly (Fig. 15). Work valve bracket off booster stud. Then work brakelines around cylinder and HCU and remove assembly.

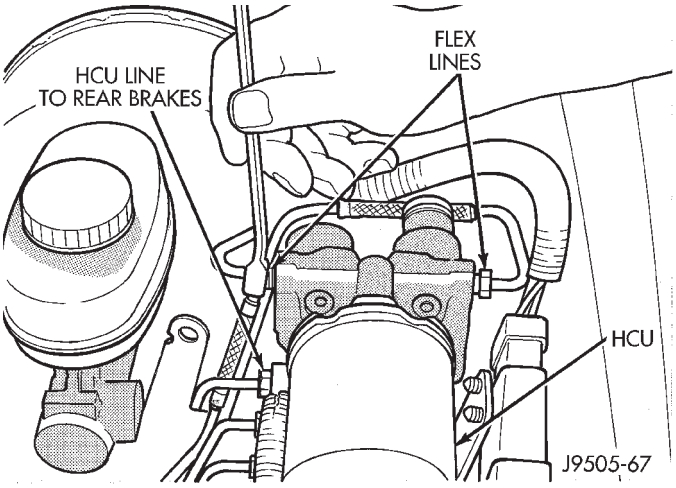

Fig. 14 Location Of HCU Flexlines And HCU Line To Rear Brakes

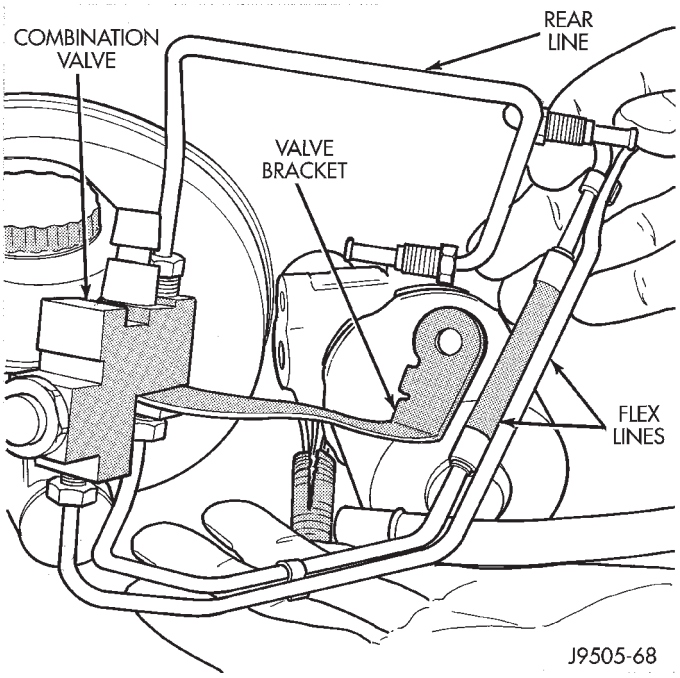

Fig. 15 Combination Valve And Brakeline Removal

(17) Remove nuts attaching master cylinder to booster studs and remove cylinder (Fig. 16).

(18) Remove master cylinder reservoir cap and drain fluid.

RESERVOIR REPLACEMENT (2-PIECE MASTER CYLINDER)

(1) Remove reservoir cap and empty fluid into drain container.

(2) Remove pins that retain reservoir to master cylinder. Use hammer and pin punch to remove pins (Fig. 17).

(3) Clamp cylinder body in vise with brass protective jaws.

(4) Loosen reservoir from grommets with pry tool (Fig. 18).

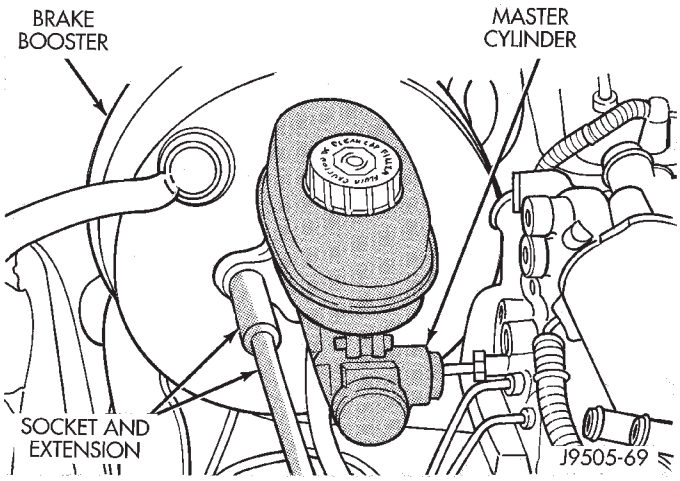

Fig. 16 Master Cylinder Attaching Nut Removal

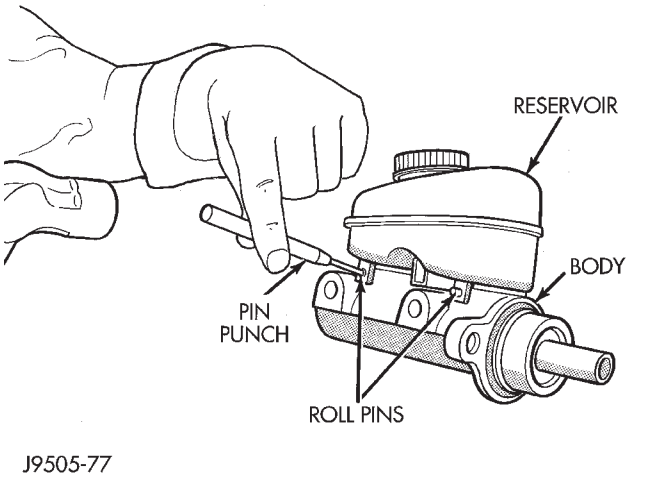

Fig. 17 Removing/Installing Reservoir Retaining Pins

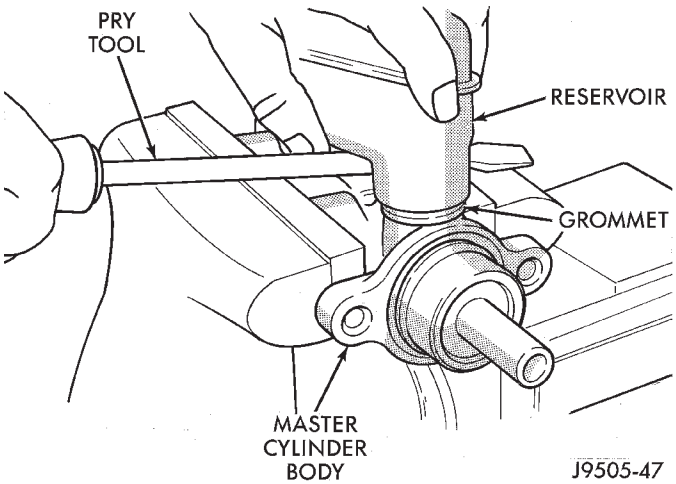

Fig. 18 Loosening Reservoir From Grommets

(5) Remove reservoir by rocking it to one side and pulling free of grommets (Fig. 19).

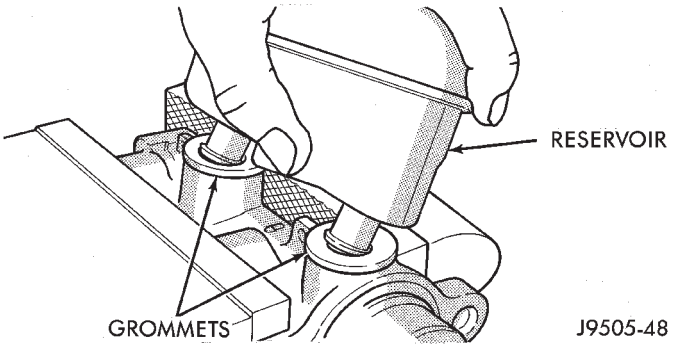

Fig. 19 Reservoir Removal

(6) Remove old grommets from cylinder body (Fig. 20).

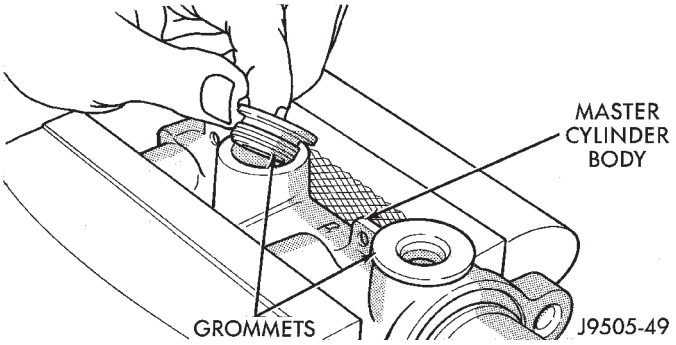

Fig. 20 Grommet Removal

(7) Lubricate new grommets with clean brake fluid.

(8) Install new grommets in cylinder body (Fig. 21). Use finger pressure only to install and seat grommets.

CAUTION: Do not use any type of tool to install the grommets. Tools may cut, or tear the grommets creating a leak problem after installation. Install the grommets using finger pressure only.

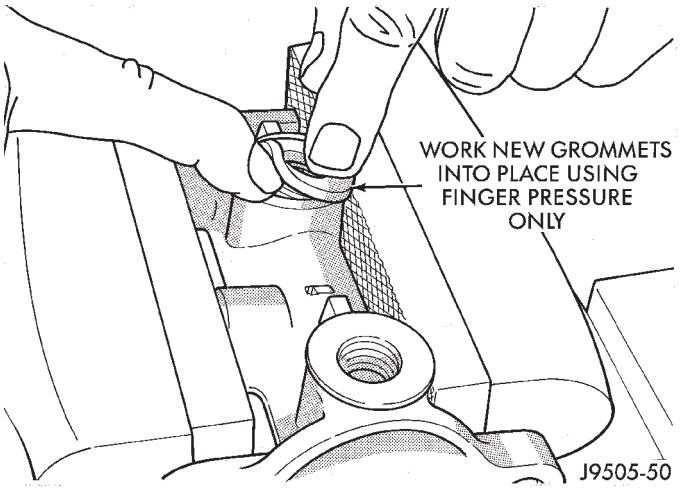

Fig. 21 Grommet Installation

(9) Start reservoir in grommets. Then rock reservoir back and forth while pressing downward to seat it in grommets.

(10) Install pins that retain reservoir to cylinder body (Fig. 17).

(11) Fill and bleed master cylinder on bench before installation in vehicle.

MASTER CYLINDER AND COMBINATION VALVE INSTALLATION (WITH ABS)

(1) Bleed master cylinder on bench before installation. Refer to procedure in this section.

(2) If new master cylinder is being installed, remove plastic protective sleeve from primary piston shank.

(3) If original master cylinder is being installed, check condition of seal at rear of master cylinder (Fig. 22). Clean and reposition seal if dislodged. Replace seal if cut, or torn.

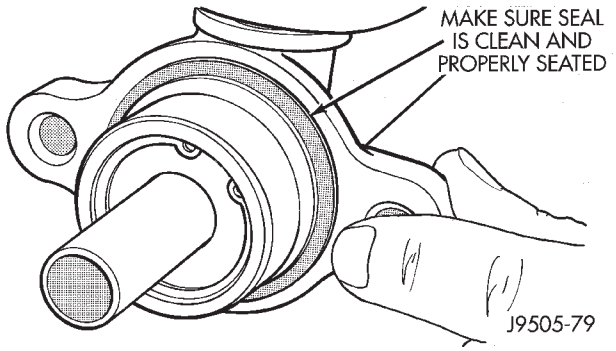

Fig. 22 Checking Master Cylinder Seal

(4) Clean cylinder mounting surface of brake booster (Fig. 23). Use shop towel wetted with brake cleaner for this purpose. Dirt, grease, or similar materials will prevent proper cylinder seating and could result in vacuum leak.

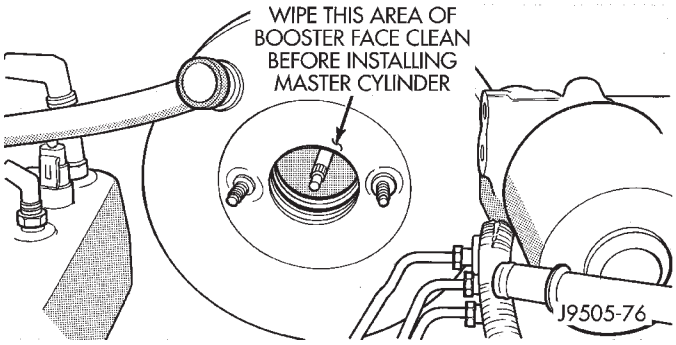

Fig. 23 Cylinder Mounting Surface Of Brake Booster

(5) If new master cylinder is being installed, **remove plastic protective sleeve from piston shank before installation.**

(6) Position master cylinder on booster studs (Fig. 24). Then install and tighten cylinder attaching nuts to 25 N·m (220 in. lbs.) torque.

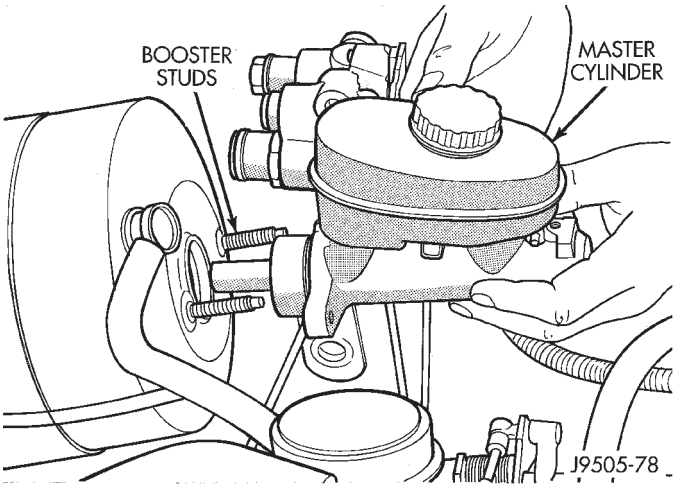

Fig. 24 Master Cylinder Installation

(7) Install combination valve as follows:

(a) Work combination valve and brakelines into position.

(b) Slide combination valve bracket onto booster stud closest to driver side fender (Fig. 25). Then install bracket attaching nut but do not fully tighten nut at this time.

(c) Connect flex lines to HCU. Start lines by hand to avoid cross threading.

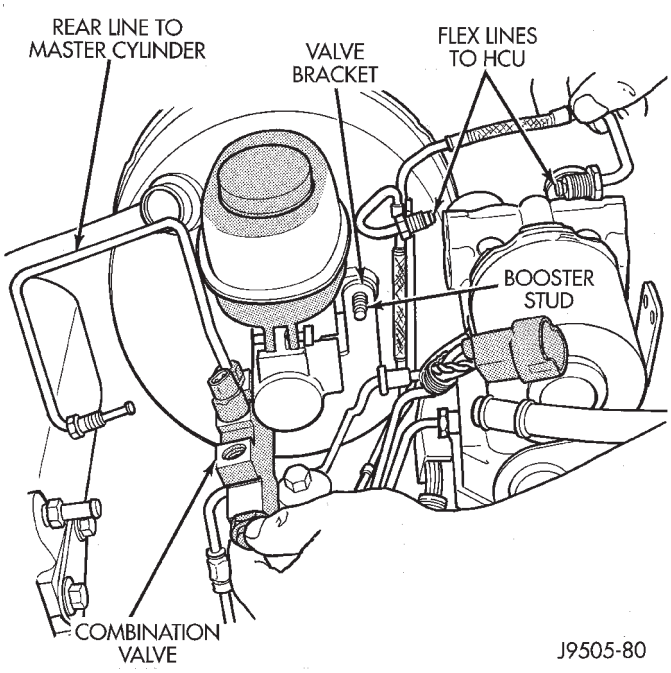

Fig. 25 Combination Valve Installation

(8) Swing rear brakeline around and connect it to master cylinder. Then install and connect front brakeline to combination valve and master cylinder. Start brakelines by hand to avoid cross threading.

(9) Tighten combination valve bracket attaching nut to 25 N·m (220 in. lbs.) torque.

(10) Install S-clip on lines from master cylinder to combination valve.

(11) Connect wire to pressure differential switch in combination valve.

(12) Fill and bleed brake system.

(13) Tighten brakeline fittings to 15-18 N·m (130-160 in. lbs.) at HCU and master cylinder and to 18-24 N·m (160-210 in. lbs.) at combination valve.

(14) Connect brake booster and canister vacuum hoses to manifold fittings.

(15) Install air cleaner housing, filter, cover, and hose.

(16) Connect PCV hose.

MASTER CYLINDER BENCH BLEEDING

The bench bleeding procedure for both master cylinder types is basically the same. The only difference, is that both bleed tubes go in the same filler neck opening on cylinders with the nylon reservoir.

(1) On models with integral master cylinder, fill each reservoir to within 6 mm (1/4 in.) of rim. On two-piece cylinder, fill reservoir to FULL mark.

(2) Fabricate and install master cylinder bleed tubes. Be sure tube ends are submerged in brake fluid. Tubes can be fabricated from rubber hose, or copper tubing and spare brakeline fittings.

(3) Using push rod or wooden dowel (Fig. 26), stroke cylinder pistons fully into bore;then allow pistons to return under spring pressure. Repeat this operation until air bubbles cease to appear in fluid.

(4) Remove bleed tubes, cap outlet ports, and install reservoir cap, or cover and seal.

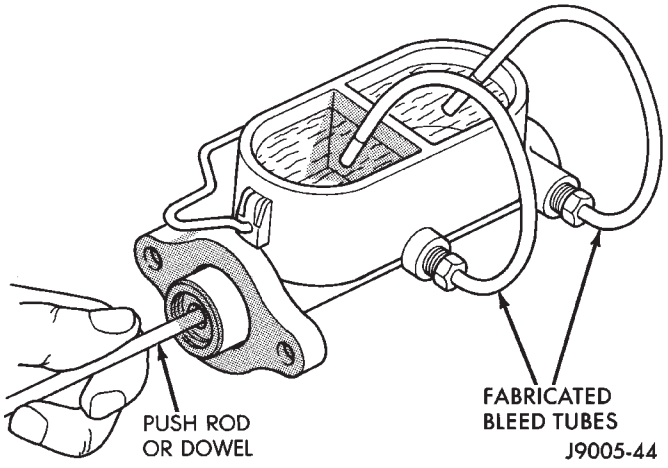

Fig. 26 Typical Method Of Bleeding Master Cylinder (One-Piece Cylinder Shown)

POWER BRAKE BOOSTER—BRAKE PEDAL—BRAKELIGHT SWITCH

INDEX

	page		page
Brake Pedal Installation	31	Power Brake Booster Installation (XJ Without ABS)	30
Brake Pedal Removal	31	Power Brake Booster Installation (YJ)	30
Brakelight Switch Adjustment	32	Power Brake Booster Operation	23
Brakelight Switch Installation	32	Power Brake Booster Removal (XJ with ABS)	24
Brakelight Switch Removal	32	Power Brake Booster Removal (XJ Without ABS)	29
General Information	22	Power Brake Booster Removal (YJ)	30
Power Brake Booster Installation (XJ with ABS)	27		

GENERAL INFORMATION

A 205 mm (8.07 in.) dual diaphragm power brake booster is used for all applications (Figs. 1 and 2).

The only serviceable parts on the power brake booster (Figs. 1 and 2) are the check valve, and vacuum hose. The booster itself is not serviceable. Replace the booster as an assembly whenever diagnosis indicates a malfunction has occurred.

Brake Pedal And Brakelight Switch

A suspended-type brake pedal is used on all models. The pedal pivots on a shaft mounted in the pedal support bracket. The bracket is attached to the dash and instrument panels on all models.

A plunger-type, adjustable brakelight switch is used on all models. The switch is attached to a flange on the pedal support bracket.

The brake pedal is a serviceable component. The pedal, pivot pin, sleeve, pedal bushings and spacers/washers are all replaceable parts. The pedal bracket can also be replaced when necessary.

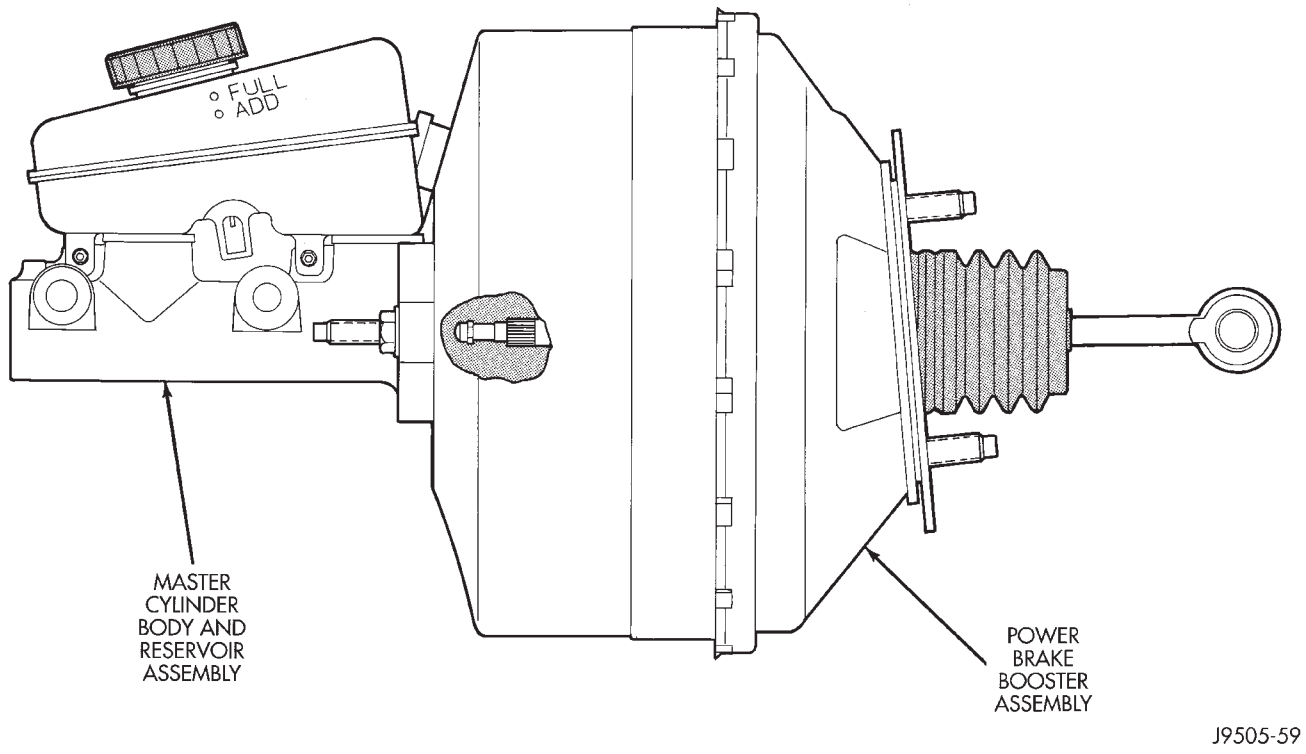

Fig. 1 Brake Booster/Master Cylinder Assembly (XJ)

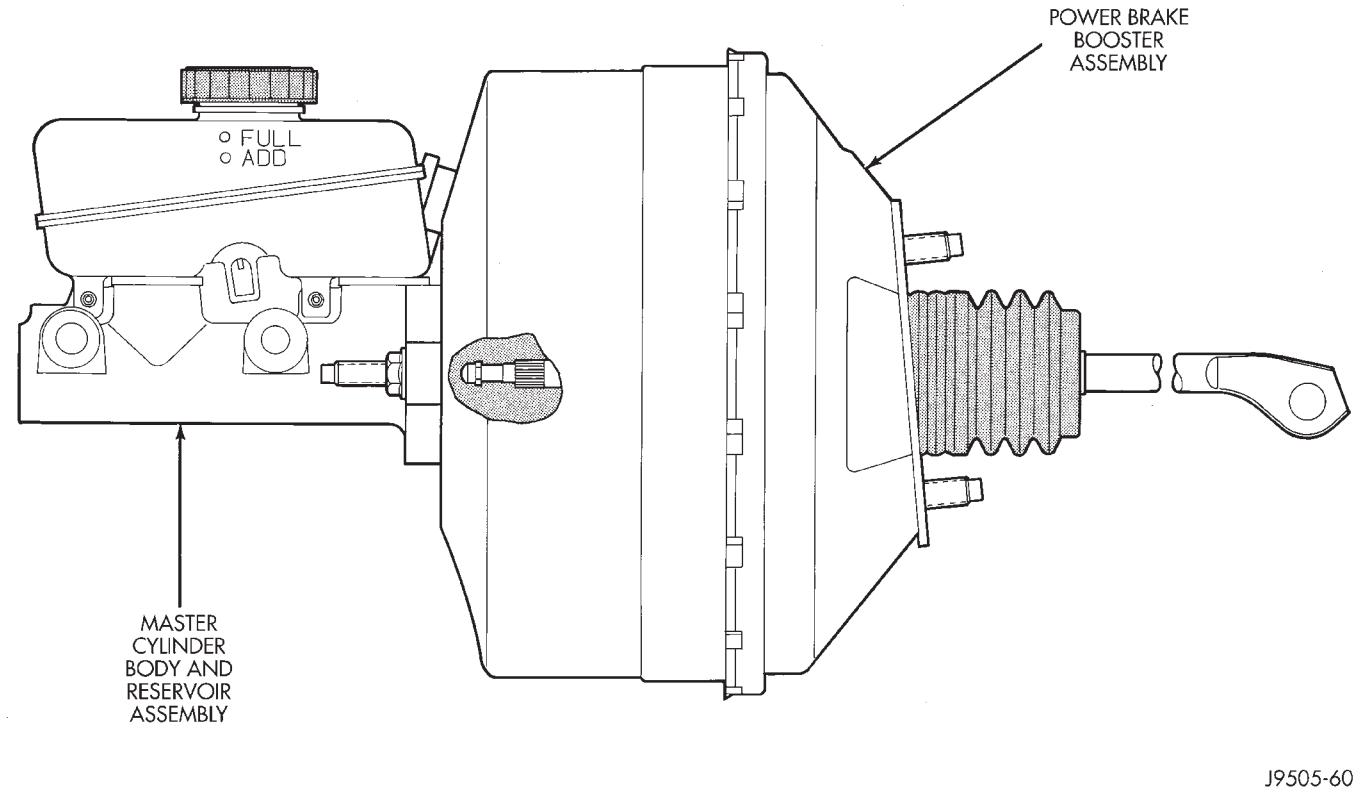

Fig. 2 Brake Booster/Master Cylinder Assembly (YJ)

POWER BRAKE BOOSTER OPERATION

Booster Components

The booster assembly consists of a housing divided into separate chambers by two internal diaphragms (Fig. 2). The outer edge of each diaphragm is attached to the booster housing. The diaphragms are connected to the booster primary push rod.

Two push rods are used in the booster. The primary push rod connects the booster to the brake pedal. The secondary push rod connects the booster to the master cylinder to stroke the cylinder pistons.

The atmospheric inlet valve is opened and closed by the primary push rod. Booster vacuum supply is through a hose attached to an intake manifold fitting at one end and to the booster check valve at the other. The vacuum check valve in the booster housing is a one-way device that prevents vacuum leak back.

How Brake Boost Is Generated

Power assist is generated by utilizing the pressure differential between normal atmospheric pressure and a vacuum. The vacuum needed for booster operation is taken directly from the engine intake manifold. The entry point for atmospheric pressure is through a filter and inlet valve at the rear of the housing (Fig. 3).

The chamber areas forward of the booster diaphragms are exposed to vacuum from the intake manifold. The chamber areas to the rear of the diaphragms, are exposed to normal atmospheric pressure of 101.3 kilopascals (14.7 pounds/square in.).

Brake pedal application causes the primary push rod to open the atmospheric inlet valve. This exposes the area behind the diaphragms to atmospheric pressure. The resulting pressure differential provides the extra apply pressure for power assist.

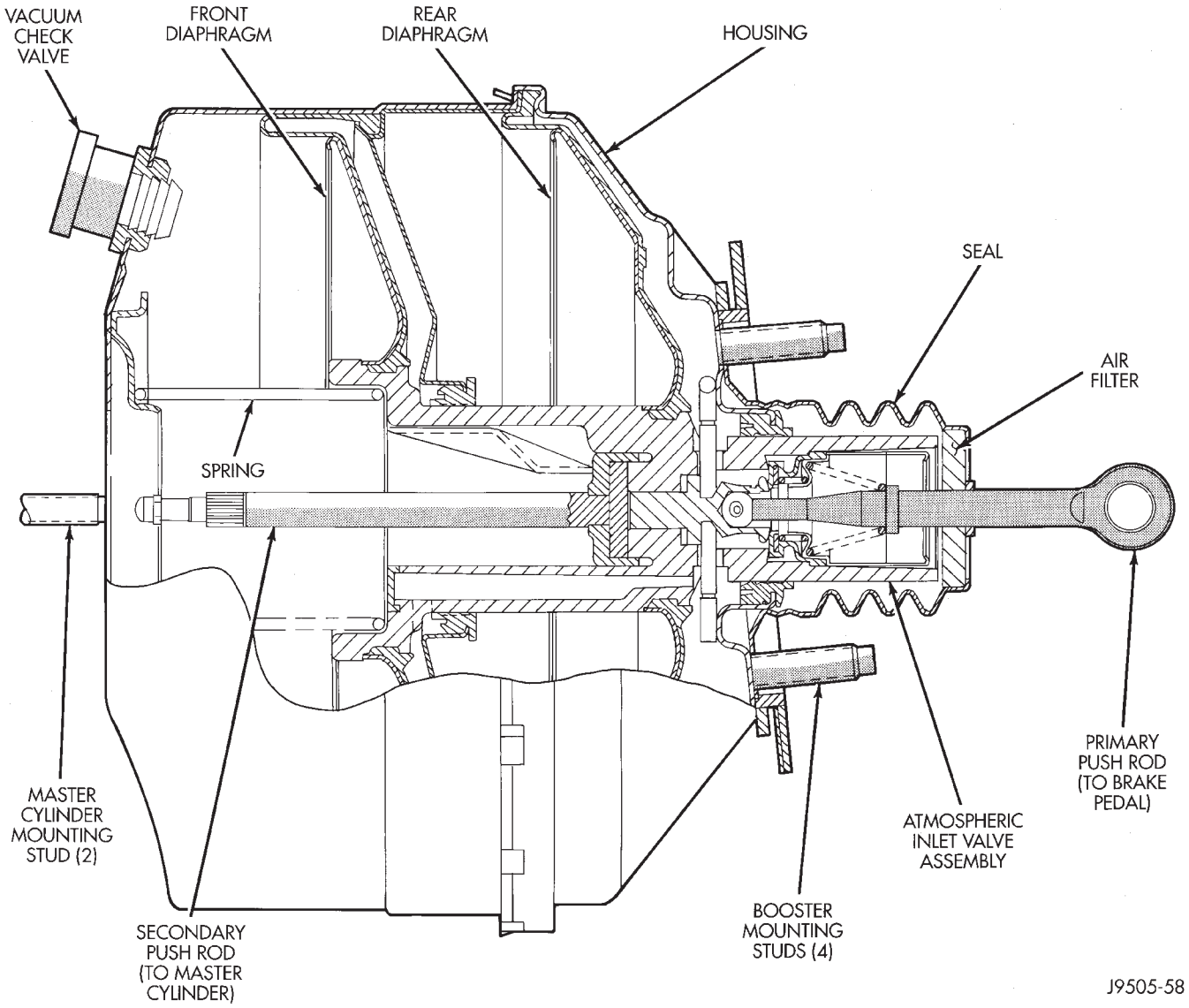

Fig. 3 Power Brake Booster Internal Components

POWER BRAKE BOOSTER REMOVAL (XJ WITH ABS)

(1) Disconnect vacuum and vent hoses at air cleaner cover.

(2) Loosen clamp securing air cleaner hose to intake manifold. Use screwdriver to tap clamp loose.

(3) Remove air cleaner cover and hose. Then remove air filter from air cleaner housing (Fig. 4).

(4) Remove two bolts and one nut that secure air cleaner housing to body (Fig. 4).

(5) Remove air cleaner housing from engine compartment (Fig. 4).

(6) Disconnect wire at combination valve pressure differential switch (Fig. 5). Do not pull on wires to disconnect. Unsnap lock tabs on connecter to remove wires.

(7) Disconnect canister vacuum line at manifold fitting (Fig. 6).

(8) Disconnect brake booster vacuum hose at intake manifold fitting (Fig. 7). Move hose aside for working clearance.

(9) Unseat small S-clip that secures brakelines (Fig. 8).

(10) Remove front brakeline that connects master cylinder front port to combination valve front port (Fig. 8).

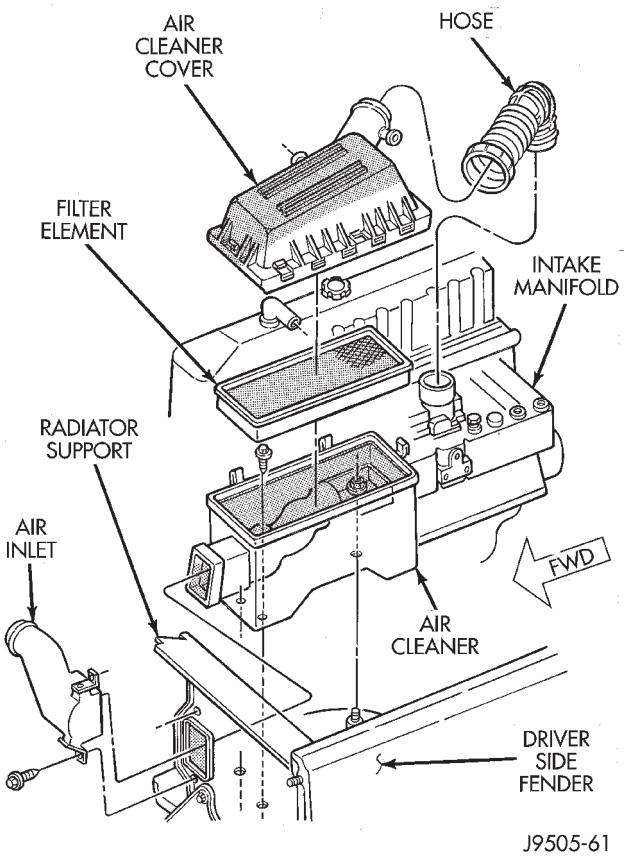

Fig. 4 Air Cleaner Components

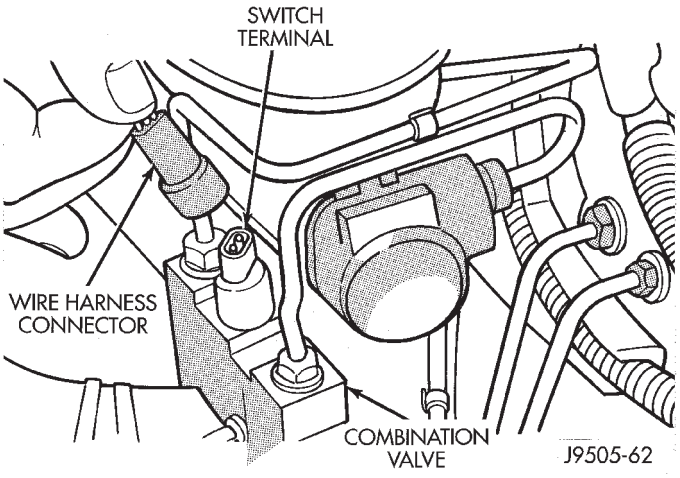

Fig. 5 Pressure Differential Switch Wire Connection

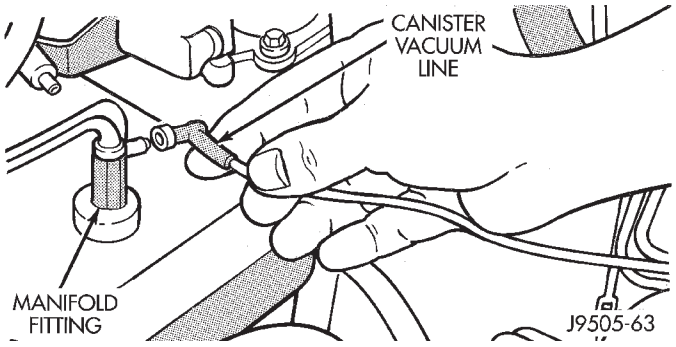

Fig. 6 Canister Vacuum Line Location (At Manifold Fitting)

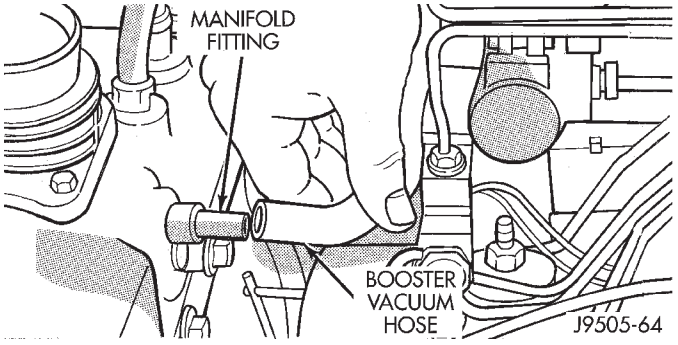

Fig. 7 Booster Vacuum Hose Removal/Installation (From Manifold Fitting)

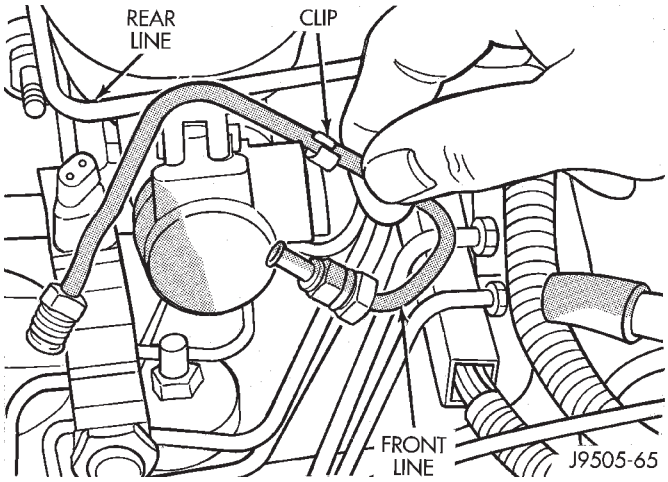

Fig. 8 Master Cylinder Front Brakeline Removal/ Installation

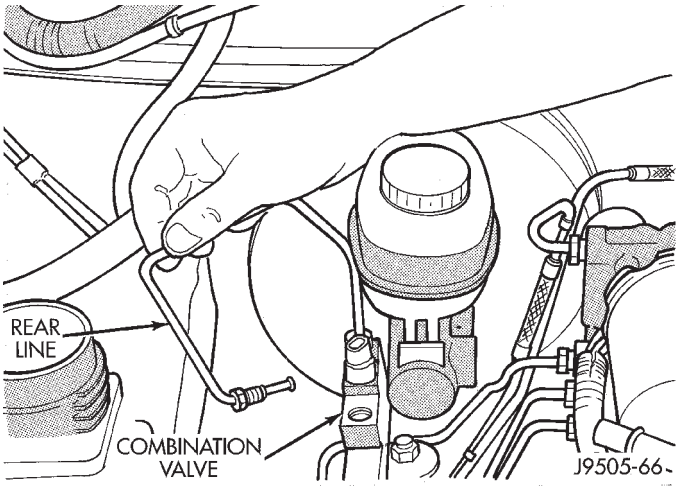

Fig. 9 Disconnecting Master Cylinder Rear Brakeline

(11) Disconnect master cylinder rear brakeline at cylinder. Then loosen line at combination valve and swing line around to opposite side of cylinder (Fig. 9).

(12) Disconnect rear brakeline at HCU (Fig. 10).

(13) Disconnect both flex brakelines at HCU (Fig. 10).

(14) Disconnect HCU line to rear brakes at HCU port (Fig. 10).

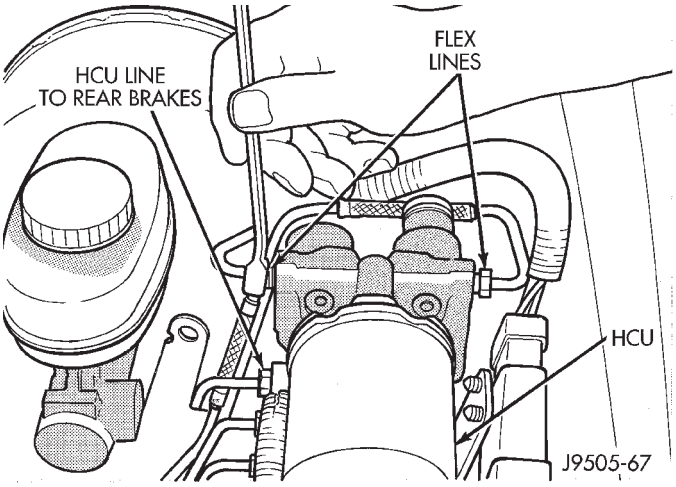

Fig. 10 Location Of HCU Flexlines And HCU Line To Rear Brakes

(15) Remove nut attaching combination valve bracket to brake booster stud.

(16) Remove combination valve and brakelines as assembly (Fig. 11). Work valve bracket off booster stud. Then work brakelines around cylinder and HCU and remove assembly.

(17) Remove nuts attaching master cylinder to booster studs and remove cylinder (Fig. 12).

(18) Remove master cylinder reservoir cap and drain fluid.

(19) Disconnect HCU solenoid harness from main harness (Fig. 13).

(20) Disconnect HCU pump motor harness (Fig. 14).

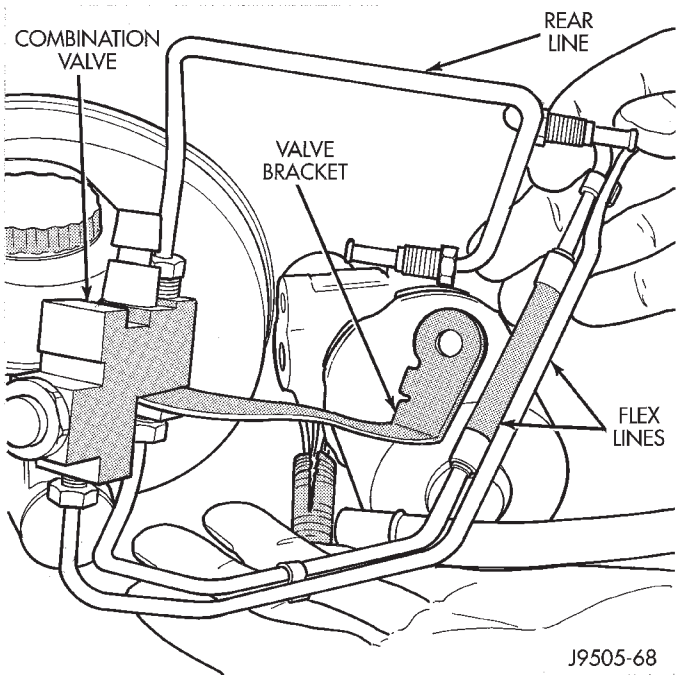

Fig. 11 Combination Valve And Brakeline Removal

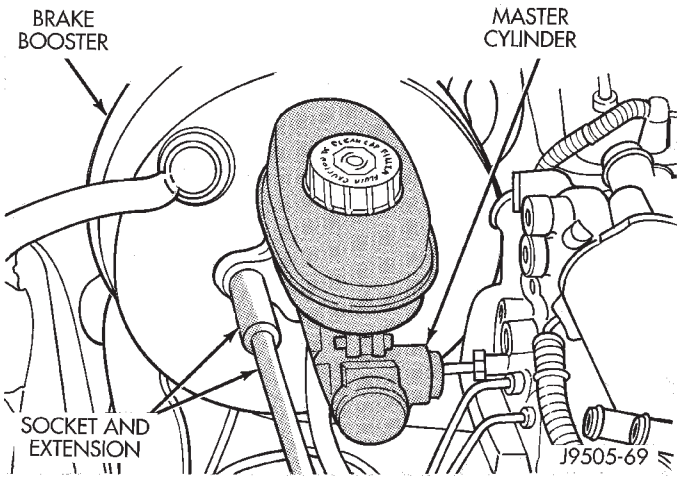

Fig. 12 Master Cylinder Attaching Nut Removal

(21) Disconnect lines at lower left side of HCU (Fig. 15).

(22) Remove nuts attaching HCU mounting bracket to stud plate and body. Then remove HCU and bracket as assembly.

(23) In passenger compartment, remove instrument panel lower trim cover.

(24) Remove retaining clip that secures booster push rod to brake pedal (Fig. 16).

(25) Remove nuts attaching booster to passenger compartment side of dash panel.

(26) In engine compartment, slide booster studs out of dash panel, tilt booster upward, and remove booster from engine compartment.

(27) Remove booster spacer, if equipped.

(28) Remove dash seal from booster, or dash panel.

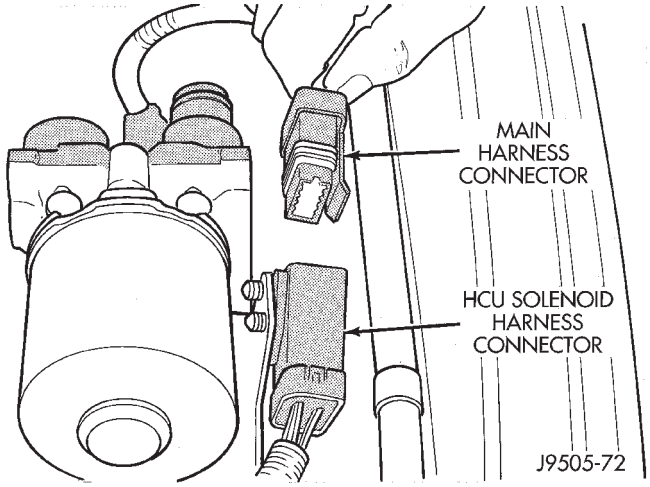

Fig. 13 Disconnecting HCU Solenoid Harness

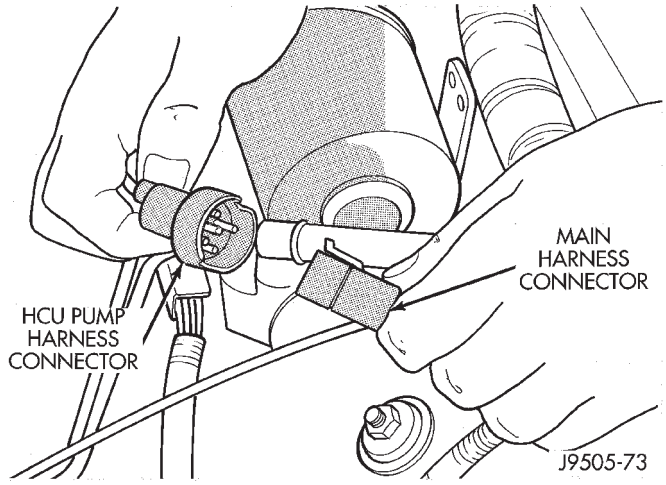

Fig. 14 Disconnecting HCU Pump Harness

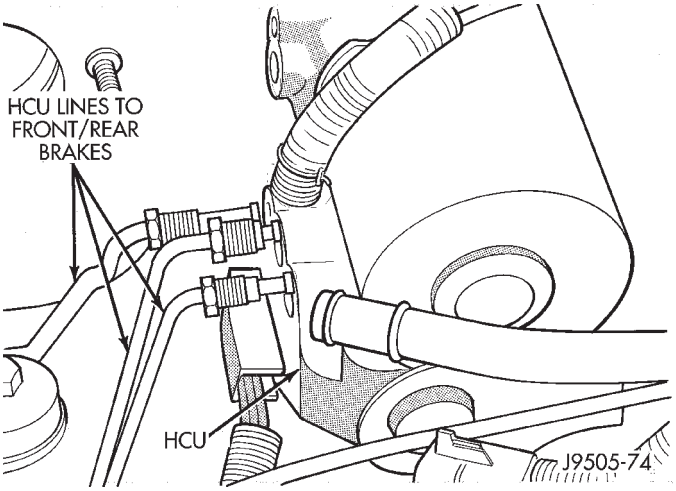

Fig. 15 HCU Front/Rear Brakeline Connections

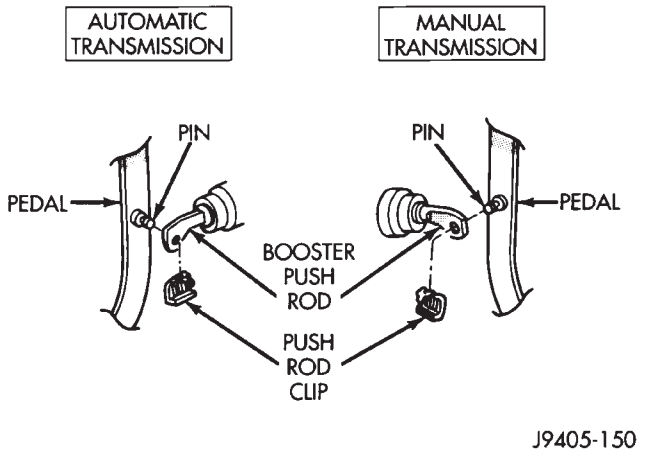

Fig. 16 Push Rod Attachment At Brake Pedal

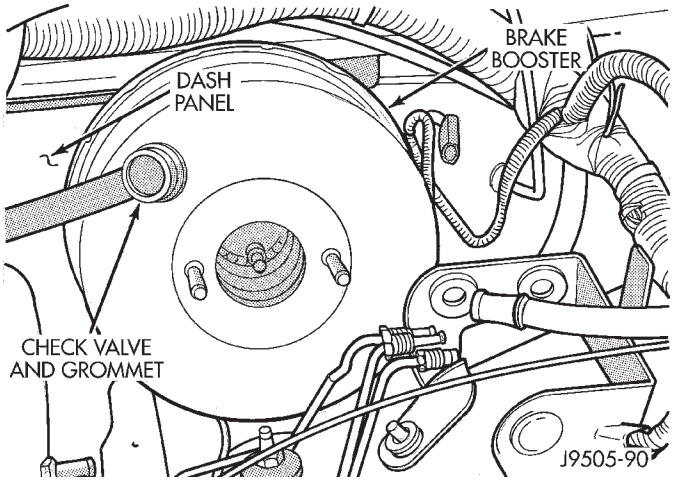

Fig. 17 Brake Booster Positioned On Dash Panel

POWER BRAKE BOOSTER INSTALLATION (XJ WITH ABS)

(1) If new booster is being installed, install new check valve and vacuum hose (Fig. 17). Also install dash seal and spacer on new booster, if equipped.

(2) Position booster on dash panel (Fig. 17) seat booster studs in dash panel holes.

(3) Working inside vehicle, install nuts on booster mounting studs. Tighten nuts just enough to hold booster in place.

(4) Attach booster push rod to brake pedal. Secure push rod with retainer clip.

(5) Tighten booster attaching nuts to 41 N·m (30 ft. lbs.) on XJ and 34 N·m (25 ft. lbs.) on YJ.

(6) If necessary, bleed master cylinder on bench before installation. Refer to procedure in master cylinder section.

(7) If new master cylinder is being installed, **remove plastic protective sleeve from primary piston shank.**

(8) Check condition of seal at rear of master cylinder (Fig. 22). Clean and reposition seal if dislodged. Replace seal if cut, or torn.

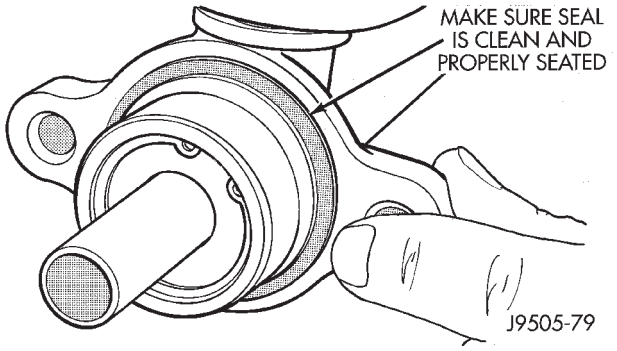

Fig. 18 Checking Master Cylinder Seal

(9) Clean cylinder mounting surface of brake booster (Fig. 19). Use shop towel wetted with brake cleaner for this purpose. Dirt, grease, or similar materials will prevent proper cylinder seating and could result in vacuum leak.

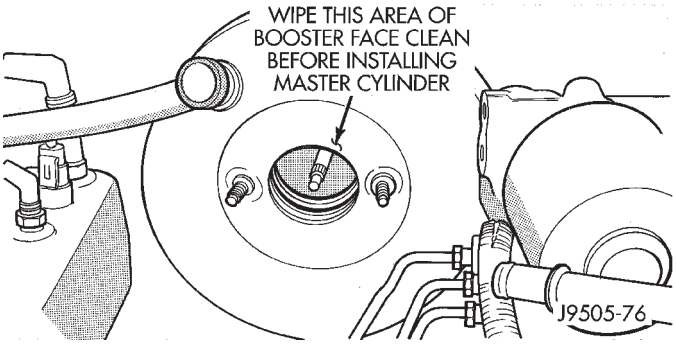

Fig. 19 Cylinder Mounting Surface Of Brake Booster

(10) Position master cylinder on booster studs (Fig. 20). **Be sure booster push rod is centered and seated in master cylinder piston shank.**

(11) Install and tighten master cylinder attaching nuts to 25 N·m (220 in. lbs.) torque.

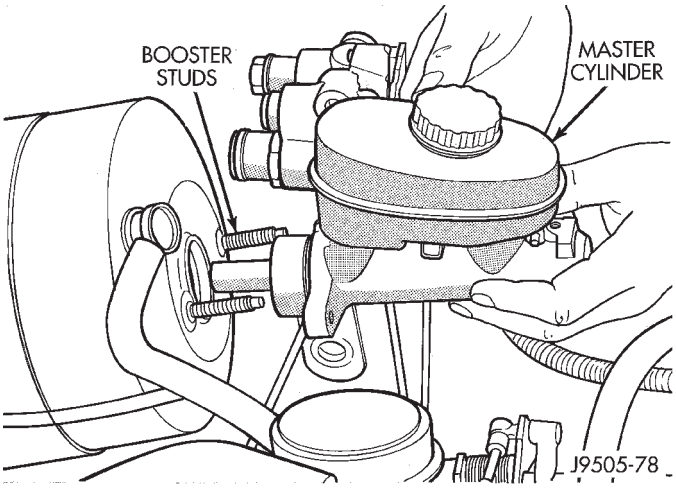

Fig. 20 Master Cylinder Installation

(12) Install HCU as follows:

(a) If only the HCU was removed, position HCU in mounting bracket. Then install and tighten three shoulder bolts that attach HCU to bracket (Figs. 21 and 22). One bolt is used at forward end of bracket and two at rear as shown.

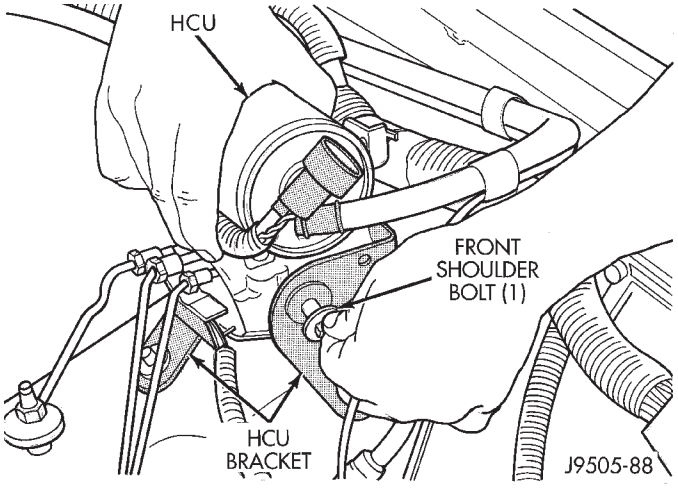

Fig. 21 Installing HCU Front Shoulder Bolt

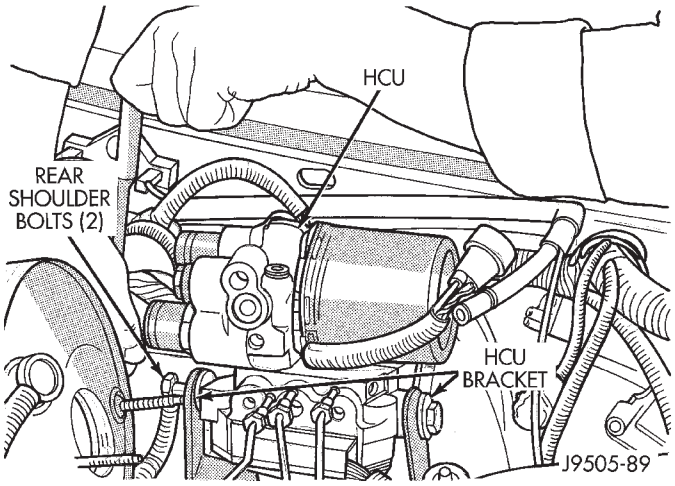

Fig. 22 Installing HCU Rear Shoulder Bolts

(b) If HCU and bracket were removed as assembly, position bracket on studs and install attaching nuts. Tighten nuts to 10-13 N·m (92-112 in. lbs.) torque.

(c) On right hand drive models, If brackets were removed, assemble brackets. Then position lower bracket on body studs and install attaching nuts and the one attaching bolt (Fig. 23).

(13) If HCU mounting bracket was not removed, press solenoid harness connecter fasteners into mounting bracket holes.

(14) Connect HCU pump motor and solenoid harnesses (Figs. 13 and 14).

(15) Connect brakelines to HCU. Start brakeline fittings in HCU ports by hand to avoid cross threading (Fig. 24). Then tighten line fittings snug but not to required torque at this time.

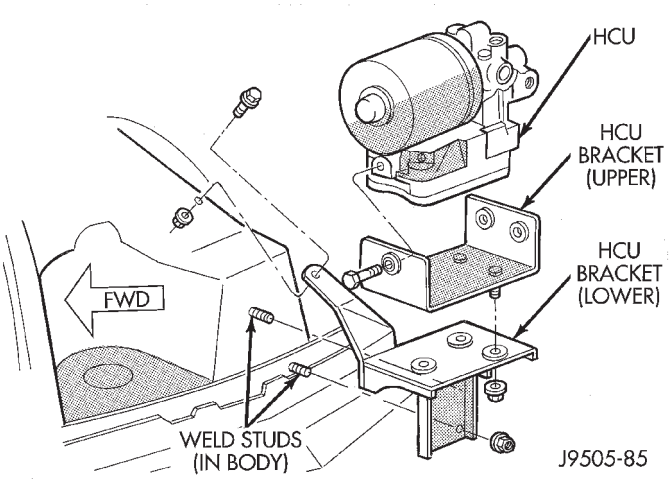

Fig. 23 HCU And Bracket Mounting (RHD Models)

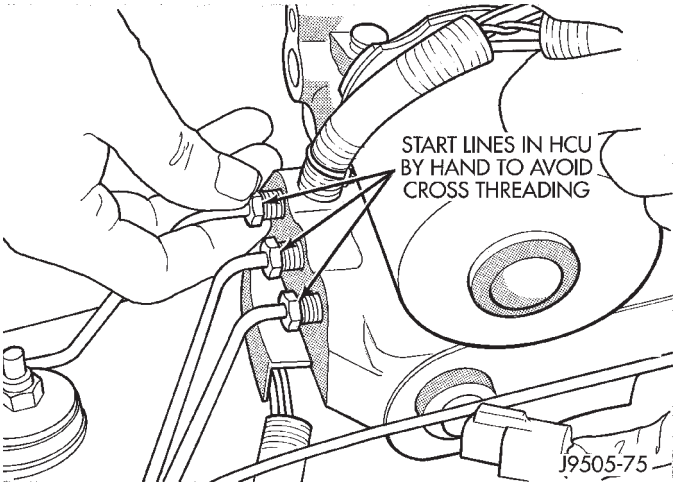

Fig. 24 Starting Brakelines In HCU

(16) Install combination valve as follows:

(a) Work combination valve and brakelines into position.

(b) Slide combination valve bracket onto booster stud closest to driver side fender (Fig. 25). Then install bracket attaching nut but do not fully tighten nut at this time.

(c) Connect flex lines to HCU. Start lines by hand to avoid cross threading.

(17) Swing rear brakeline around and connect it to master cylinder. Then install and connect front brakeline to combination valve and master cylinder. Start brakelines by hand to avoid cross threading.

(18) Tighten combination valve bracket attaching nut to 25 N·m (220 in. lbs.) torque.

(19) Install clip on lines from master cylinder to combination valve.

(20) Connect wire to pressure differential switch on combination valve.

(21) Connect flex lines to HCU (Fig. 10). Start line fittings by hand to avoid cross threading. Then tighten fittings snug but not to required torque at this time.

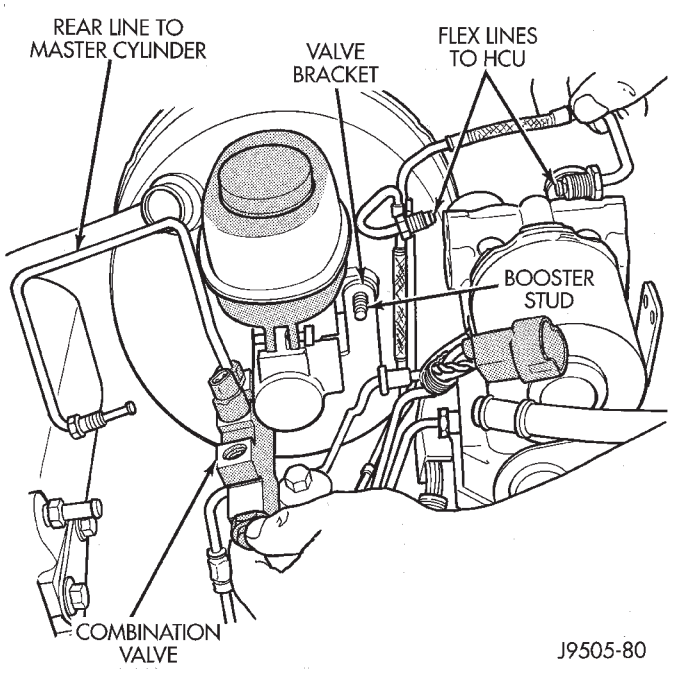

Fig. 25 Combination Valve Installation

(22) Bleed brakes. Refer to procedure in Brake Fluid-Brake Bleeding-Brakelines And Hoses section.

(23) Tighten brakeline fittings to 15-18 N·m (130-160 in. lbs.) at HCU and master cylinder, and 18-24 N·m (160-210 in. lbs.) at combination valve.

(24) Install air cleaner assembly.

(25) Connect vacuum lines to manifold fittings.

(26) Check brake pedal action before moving vehicle. Bleed brakes again if pedal is not firm (feels soft/spongy).

POWER BRAKE BOOSTER REMOVAL (XJ WITHOUT ABS)

(1) Disconnect vent and vacuum hose from engine air cleaner cover.

(2) Remove engine air cleaner cover, filter, housing and hoses (Fig. 4).

(3) Disconnect brakelines at master cylinder.

(4) Disconnect wire at combination valve differential pressure switch.

(5) If combination valve does not have an integral bracket, disconnect brakelines at combination valve and remove valve.

(6) If combination valve has integral bracket, remove nut attaching valve bracket to booster studs and remove valve.

(7) Remove nuts attaching master cylinder to booster studs and remove cylinder.

(8) Disconnect vacuum hose from booster check valve.

(9) In passenger compartment, remove instrument panel lower trim cover.

(10) Remove retaining clip that secures booster push rod to brake pedal (Fig. 5).

(11) Remove nuts attaching booster to passenger compartment side of dash panel.

(12) In engine compartment, slide booster studs out of dash panel, tilt booster upward, and remove booster from engine compartment.

(13) Remove dash seal from booster.

(14) If booster is only being removed for access to other components, cover booster front opening with clean shop towel.

POWER BRAKE BOOSTER INSTALLATION (XJ WITHOUT ABS)

(1) If original booster is being installed, test check valve with vacuum tool before booster installation. Replace check valve if it will not hold vacuum.

(2) Install dash seal on booster.

(3) Align and position booster on dash panel (Fig. 17).

(4) In passenger compartment, install nuts that attach booster to dash panel. Tighten nuts just enough to hold booster in place.

(5) Slide booster push rod onto brake pedal. Then secure push rod to pedal pin with retaining clip.

(6) Tighten booster attaching nuts to 41 N·m (30 ft. lbs.) on XJ and 34 N·m (25 ft. lbs.) on YJ.

(7) Install instrument panel lower trim cover.

(8) If original master cylinder is being installed, check condition of seal at rear of master cylinder (Fig. 18). Clean and reposition seal if dislodged. Replace seal if cut, or torn.

(9) Clean cylinder mounting surface of brake booster. Use shop towel wetted with brake cleaner for this purpose. Dirt, grease, or similar materials will prevent proper cylinder seating and could result in vacuum leak.

(10) Align and install master cylinder on booster studs. Tighten cylinder attaching nuts to 13-25 N·m (115-220 in. lbs.) torque.

(11) Connect vacuum hose to booster check valve.

(12) Connect and secure brakelines to combination valve and master cylinder. Start all brakeline fittings by hand to avoid cross threading.

(13) If combination valve has integral bracket, position bracket on booster studs. Then install and tighten bracket attaching nuts to 13-25 N·m (115-220 in. lbs.) torque.

(14) Connect wire to combination valve switch.

(15) Top off master cylinder fluid level.

(16) Bleed brakes. Refer to procedures in section on brake bleeding.

(17) Install engine air cleaner and hoses.

(18) Verify proper brake operation before moving vehicle.

POWER BRAKE BOOSTER REMOVAL (YJ)

(1) Disconnect brakelines at master cylinder. Then loosen lines at combination valve and move lines away from cylinder.

(2) Remove nuts master cylinder to booster studs.

(3) If combination valve has integral bracket, slide bracket off studs and move valve aside.

(4) Remove master cylinder. Slide cylinder off studs and remove it from engine compartment.

(5) Working under instrument panel, remove retainer clip that secures booster push rod to brake pedal.

(6) Disconnect vacuum hose at booster check valve.

(7) On non-ABS models, remove nuts attaching brake booster spacer to dash panel and remove booster (Fig. 26).

(8) On ABS models, remove nuts attaching booster to spacer and remove booster (Fig. 27).

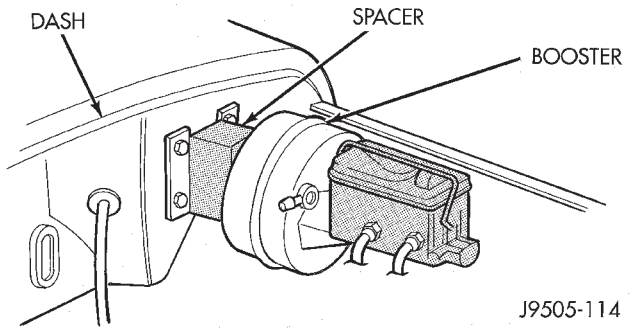

Fig. 26 Booster Mounting (4-Cyl. Models)

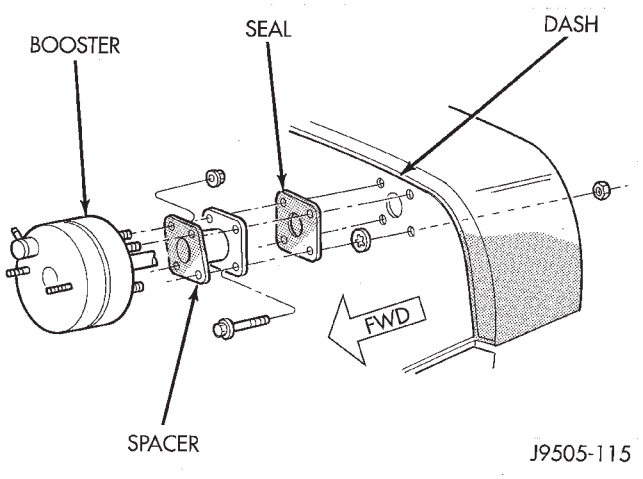

Fig. 27 Booster Mounting (With ABS)

POWER BRAKE BOOSTER INSTALLATION (YJ)

(1) Install seal on booster spacer, if equipped.

(2) Position booster on dash panel, or on spacer.

(3) Secure booster push rod to brake pedal with retaining clip.

(4) Install and tighten booster attaching nuts to 27-47 N·m (20-35 ft. lbs.) torque. Nut torque applies to both styles of booster.

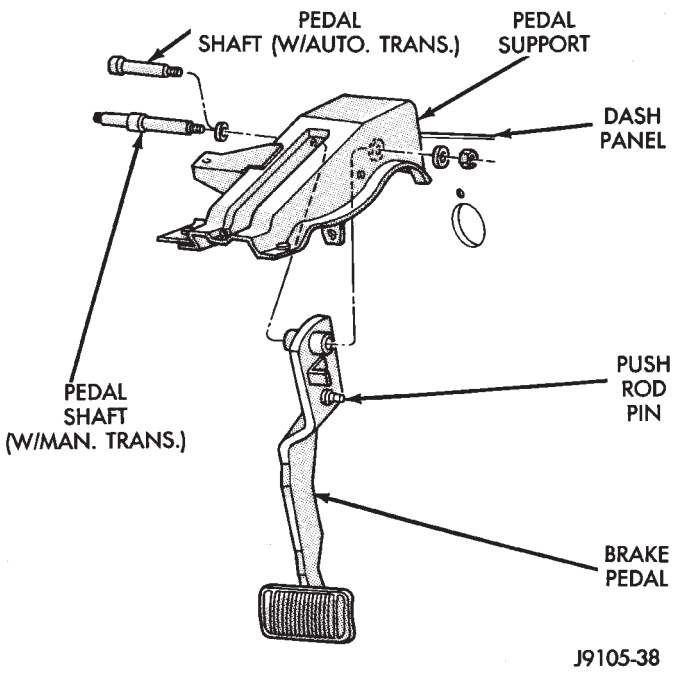

Fig. 28 Brake Pedal And Support Bracket (YJ)

(5) Connect vacuum hose to brake booster check valve.

(6) Install master cylinder and combination valve.

(7) Bleed brakes. Then tighten brakeline fittings to 15-18 N·m (130-160 in. lbs.) at master cylinder and 18-24 N·m (160-210 in. lbs.) at combination valve.

BRAKE PEDAL REMOVAL

(1) Remove lower trim panel and A/C duct if necessary.

(2) Remove steering column lower trim panel and bezel.

(3) Remove necessary dash panel-to-instrument panel brace rods.

(4) Disconnect and remove brakelight switch.

(5) Remove retainer clip securing booster push rod to pedal (Fig. 16).

(6) Remove nut securing pedal shaft in support bracket.

(7) Slide pedal shaft outward for clearance and remove brake pedal (Figs. 28 and 29).

(8) Remove pedal bushings if they are to be replaced.

BRAKE PEDAL INSTALLATION

(1) Install new bushings in pedal. Lubricate bushings and pivot pin with Mopar multi mileage grease.

(2) Position pedal, sleeve and spacer(s) in bracket and install pivot pin.

(3) Install new nut on pivot pin. **Pivot pin nut is specially formed and should not be reused. Be sure to install new nut to secure pin.**

(4)) Tighten new pivot pin nut to 27 N·m (20 ft. lbs.) on models with manual transmission. Tighten nut to 35 N·m (26 ft. lbs.) on models with automatic transmission.

(5) Install booster push rod on pedal pin (Fig. 16). Secure push rod with original, or new retainer clip if necessary.

(6) Install and connect brakelight switch.

(7) Install dash brace rod, if equipped.

(8) Install instrument panel and steering column trim covers.

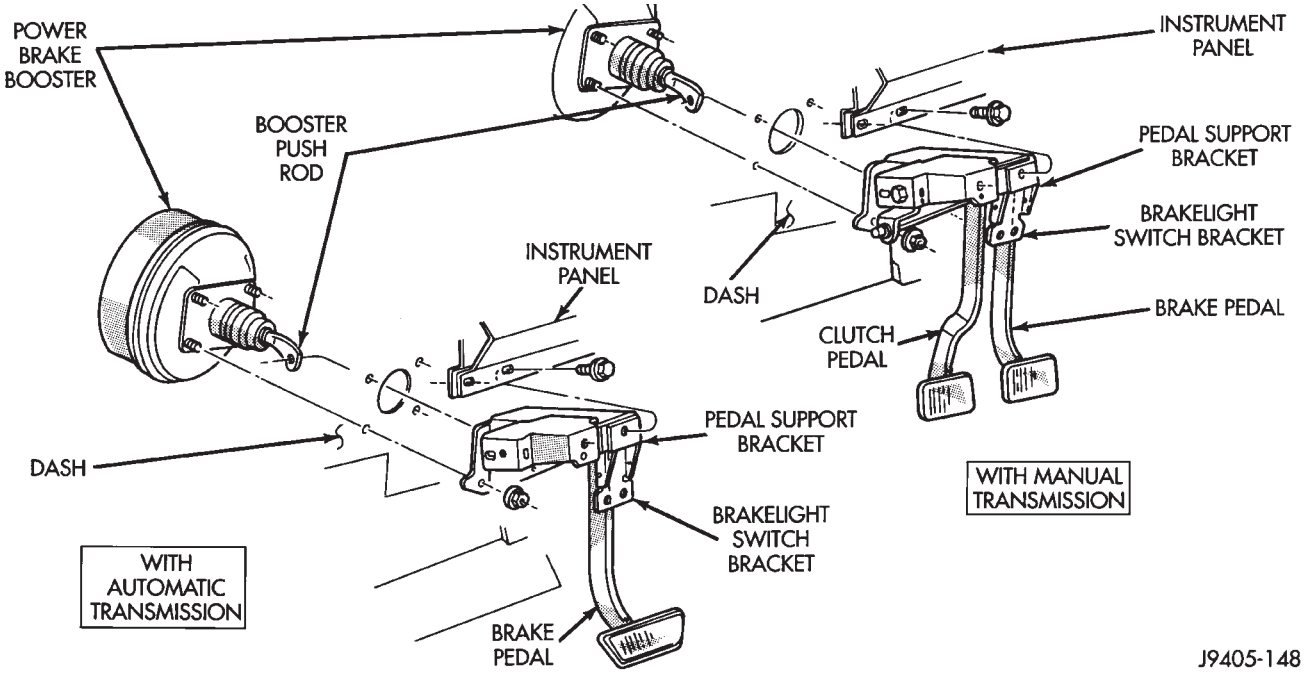

Fig. 29 Brake Pedal And Support Bracket (XJ)

BRAKELIGHT SWITCH REMOVAL

The brakelight switch is mounted in the pedal support bracket and is operated by the pedal. The switch is secured in the bracket with a retainer (Fig. 30).

(1) Remove steering column cover and lower trim panel for switch access, if necessary.

(2) Disconnect switch wire harness.

(3) Thread switch out of retainer, or rock switch up/down and pull it rearward out of retainer.

(4) Inspect switch retainer, if equipped. Replace retainer if worn, distorted, loose, or damaged.

BRAKELIGHT SWITCH INSTALLATION

(1) Insert replacement switch in retainer. Thread switch into place or rock it up/down until switch plunger touches brake pedal. Insert switch in bracket and thread clip onto plunger to secure switch.

(2) Connect switch wires.

(3) Check switch operation. Adjust switch position if necessary. Refer to procedures in this section.

(4) Install trim panels (if removed).

BRAKELIGHT SWITCH ADJUSTMENT

A plunger-type brakelight switch is used on XJ and YJ models (Fig. 30). The switch plunger is actuated directly by the brake pedal.

The switch internal contacts are open when the brake pedal is in the released position. Brake application moves the pedal away from the switch allowing the plunger to extend. As the plunger extends, the switch internal contacts close completing the circuit to the brakelights.

The switch is retained in the bracket by a clip. The clip has tangs that seat in the threads of the switch plunger barrel.

SWITCH ADJUSTMENT PROCEDURE

(1) Check switch adjustment. Move the brake pedal forward by hand and note operation of the switch plunger. Plunger should extend when pedal free play is taken up and brake application begins. A clearance of approximately 3 mm (1/8 in.) should exist between plunger and pedal at this point.

(a) If switch-to-pedal clearance is OK and brakelights operate correctly, adjustment is not required.

(b) If switch plunger does not extend and clearance between pedal and plunger is insufficient, adjust switch position as described in step (2).

(2) Grasp brake pedal and pull it rearward as far as possible. Switch plunger barrel will "ratchet" rearward in retaining clip to correct position.

(3) Verify brakelight switch operation and proper clearance between switch plunger and brake pedal.

CAUTION: Be very sure the brake pedal returns to a fully released position after adjustment. The switch can interfere with full pedal return if too far forward. The result will be brake drag caused by partial brake application.

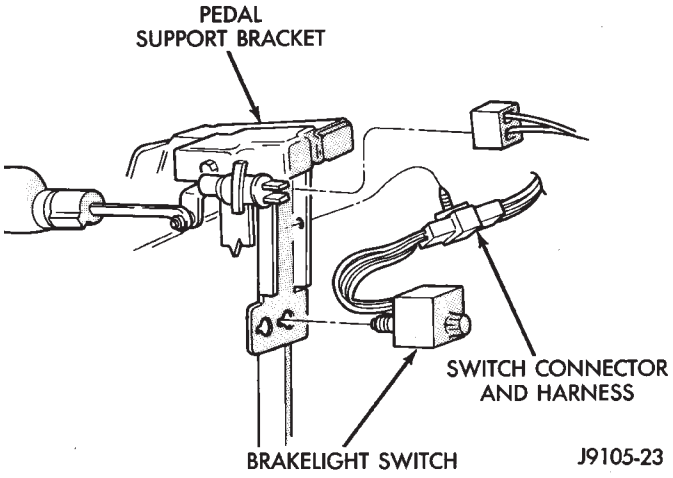

Fig. 30 Brakelight Switch Mounting And Location (XJ/YJ)

ABS OPERATION AND SERVICE

INDEX

	page		page
ABS Component Serviceability	37	HCU Installation (XJ)	43
ABS Diagnostic Connector	35	HCU Installation (YJ)	44
ABS Operation in Antilock Braking Mode	36	HCU Operation	36
ABS Operation in Normal Braking Mode	35	HCU Removal (XJ)	41
ABS System Power-Up and Initialization	35	HCU Removal (YJ)	44
Acceleration Switch	35	Hydraulic Control Unit (HCU)	33
Acceleration Switch Installation	39	Ignition Switch	35
Acceleration Switch Operation	37	Master Cylinder/Power Brake Booster	34
Acceleration Switch Removal	39	Rear Wheel Sensor Installation and Adjustment	38
Combination Valve	34	Rear Wheel Sensor Removal	38
ECU Installation (XJ Models)	40	Speed Sensor Air Gap	37
ECU Operation	37	System Description	33
ECU Removal (XJ Models)	40	System Relays	35
ECU Removal/Installation (YJ Models)	41	System Warning Light	35
Electronic Control Unit (ECU)	34	Wheel Speed Sensor Operation	37
Front Wheel Sensor Installation	38	Wheel Speed Sensors	34
Front Wheel Sensor Removal	38		

SYSTEM DESCRIPTION

The Jeep antilock brake system (ABS) is an electronically operated, all wheel brake control system.

The system is designed to prevent wheel lockup and maintain steering control during periods of high wheel slip when braking. Preventing lockup is accomplished by modulating fluid pressure to the wheel brake units.

The hydraulic system is a three channel design. The front wheel brakes are controlled individually and the rear wheel brakes in tandem (Fig. 1). The ABS electrical system is separate from other electrical circuits in the vehicle. A specially programmed electronic control unit (ECU) operates the system components.

ABS system major components include:

- hydraulic control unit (HCU)
- electronic control unit (ECU)
- wheel speed sensors and axle shaft tone rings
- acceleration switch
- main relay and pump motor relay
- ABS warning light
- pump motor sensor

HYDRAULIC CONTROL UNIT (HCU)

The hydraulic control unit (HCU) consists of a valve body, pump body, accumulators, pump motor, and wire harnesses (Fig. 2).

The pump, motor, and accumulators are combined into an assembly attached to the valve body. The accumulators store the extra fluid released to the system for ABS mode operation. The pump provides the fluid volume needed and is operated by a DC type motor. The motor is controlled by the ECU.

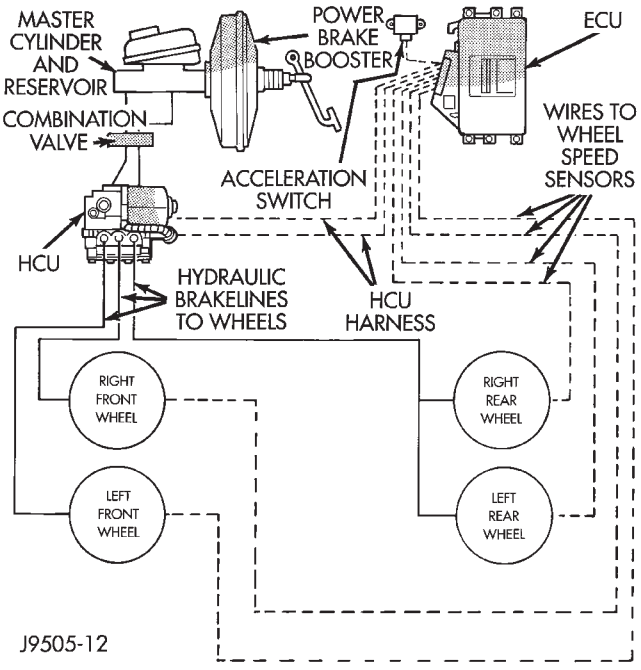

Fig. 1 Jeep ABS System

The valve body contains the solenoid valves. The valves modulate brake pressure during antilock braking and are controlled by the ECU.

The HCU provides three channel pressure control to the front and rear brakes. One channel controls the rear wheel brakes in tandem. The two remaining channels control the front wheel brakes individually.

During antilock braking, the solenoid valves are opened and closed as needed. The valves are not static. They are cycled rapidly and continuously to modulate pressure and control wheel slip and deceleration.

MASTER CYLINDER/POWER BRAKE BOOSTER

A 25 mm bore master cylinder and 205 mm (8.07 in.) dual diaphragm power brake booster are used for all ABS applications (Fig. 2).

The master cylinder has a removable plastic reservoir which is the only serviceable component. The cylinder body and pistons are not repairable and are serviced as an assembly. The check valve and grommet are the only serviceable parts on the booster. The booster itself is only serviced as an assembly.

COMBINATION VALVE

A combination valve is used with the ABS system (Fig. 2). The valve contains a front/rear brake pressure differential switch and rear brake proportioning valve. The combination valve is connected between the master cylinder and HCU.

The pressure differential switch is connected to the red brake warning light. The switch is actuated by movement of the switch valve. The switch monitors fluid pressure in the separate front/rear brake hydraulic circuits.

A decrease or loss of fluid pressure in either hydraulic circuit will cause the switch valve to shuttle forward or rearward in response to the pressure differential. Movement of the switch valve will push the switch plunger upward. This closes the switch internal contacts completing the electrical circuit to the red warning light. The switch valve remains in an actuated position until the fault is repaired.

The rear proportioning valve is used to balance front-rear brake action.

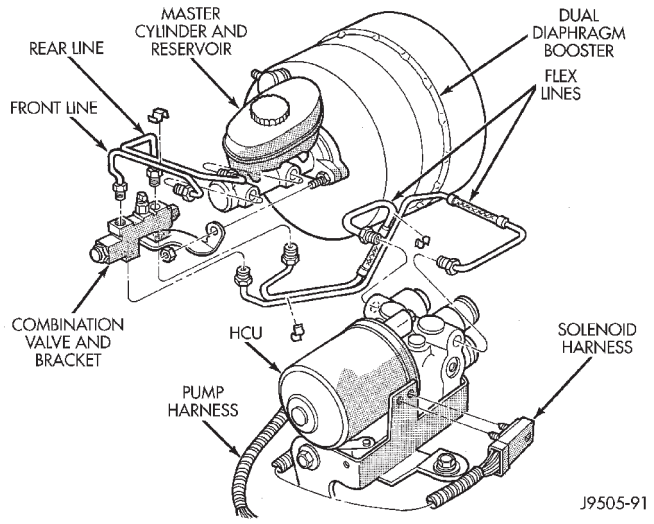

Fig. 2 ABS Master Cylinder-Booster-Combination Valve-HCU

ELECTRONIC CONTROL UNIT (ECU)

A separate electronic control unit (ECU) operates the ABS system (Fig. 3). The ECU is separate from other vehicle electrical circuits. ECU voltage source is through the ignition switch in the Run position.

The ECU is located under the instrument panel in the passenger compartment. On YJ models, it is just above the heater plenum in line with the glove box. In left hand drive XJ models, it at the right side of the steering column. In right hand drive models, it is near the cowl panel

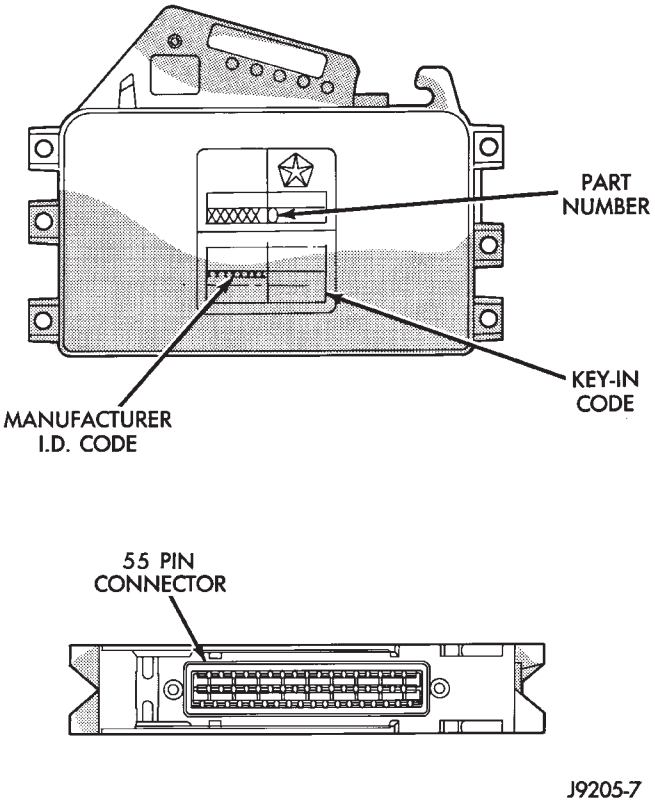

Fig. 3 Antilock ECU

The ECU contains dual microprocessors. A logic block in each microprocessor receives identical sensor signals. These signals are processed and compared simultaneously.

The ECU contains a self check program that illuminates the ABS warning light when a system fault is detected. Faults are stored in a diagnostic program memory and are accessible with the DRB scan tool.

ABS faults remain in memory until cleared, or until after the vehicle is started approximately 50 times. Stored faults are **not** erased if the battery is disconnected.

WHEEL SPEED SENSORS

A speed sensor is used at each wheel. The sensors convert wheel speed into an electrical signal. This signal is transmitted to the antilock ECU.

A gear type tone ring serves as the trigger mechanism for each sensor. The tone rings are mounted at the outboard ends of the front and rear axle shafts.

Different sensors are used at the front and rear wheels (Fig. 4). The front/rear sensors have the same electrical values but are not interchangeable.

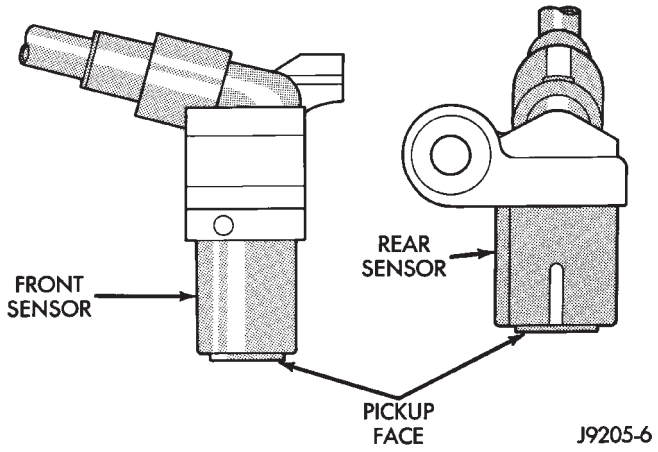

Fig. 4 Wheel Speed Sensors

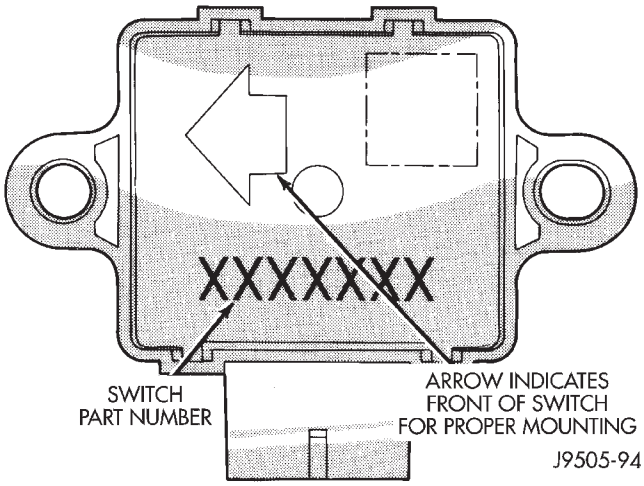

Fig. 5 Acceleration Switch

ABS DIAGNOSTIC CONNECTOR

The ABS diagnostic connector is inside the vehicle. The connector is the access point for the DRB scan tool.

On XJ models, the connector is located under the instrument panel to the right of the steering column. On some models, the connecter may be tucked under the carpeting on the transmission tunnel. The connecter is a black, 6-way type.

On YJ models, the connector is under the instrument panel by the the driver side kick panel. The connecter is a black, 6 or 8-way type.

The DRB scan tool kit contains adapter cords for both types of connecter. Use the appropriate cord for test hookup.

ACCELERATION SWITCH

An acceleration switch (Fig. 5), provides an additional vehicle deceleration reference during 4-wheel drive operation. The switch is monitored by the antilock ECU at all times. The switch reference signal is utilized by the ECU when all wheels are decelerating at the same speed.

SYSTEM RELAYS

The ABS system has two relays, which are the main and motor pump relays. The motor pump relay is used for the motor pump only. The main relay is used for the solenoid valves and ECU. The main relay is connected to the ECU at the power control relay terminal. The pump motor relay starts/stops the pump motor when signaled by the ECU.

IGNITION SWITCH

The antilock ECU and warning light are in standby mode with the ignition switch in Off or Accessory position. No operating voltage is supplied to the system components.

A 12 volt power feed is supplied to the ECU and warning light when the ignition switch is in the Run position.

SYSTEM WARNING LIGHT

The amber ABS warning light is in circuit with the ECU and operates independently of the red brake warning light.

The ABS light indicates antilock system condition. The light illuminates (flashes) at start-up for the self check. The light goes out when the self check program determines system operation is normal.

ABS SYSTEM POWER-UP AND INITIALIZATION

battery voltage is supplied to the ECU ignition terminal when the ignition switch is turned to Run position. The ECU performs a system initialization procedure at this point. Initialization consists of a static and dynamic self check of system electrical components.

The static check occurs after the ignition switch is turned to Run position. The dynamic check occurs when vehicle road speed reaches approximately 10 kph (6 mph). During the dynamic check, the ECU briefly cycles the pump and solenoids to verify operation.

If an ABS component exhibits a fault during initialization, the ECU illuminates the amber warning light and registers a fault code in the microprocessor memory.

ABS OPERATION IN NORMAL BRAKING MODE

The ECU monitors wheel speed sensor inputs continuously while the vehicle is in motion. However, the ECU will not activate any ABS components as long as sensor inputs and the acceleration switch indicate normal braking.

During normal braking, the master cylinder, power booster and wheel brake units all function as they would in a vehicle without ABS. The HCU components are not activated.

ABS OPERATION IN ANTILOCK BRAKING MODE

The purpose of the antilock system is to prevent wheel lockup during periods of high wheel slip. Preventing lockup helps maintain vehicle braking action and steering control.

The antilock ECU activates the system whenever sensor signals indicate periods of high wheel slip. High wheel slip can be described as the point where wheel rotation begins approaching zero (or lockup) during braking. Periods of high wheel slip may occur when brake stops involve high pedal pressure and rate of deceleration.

The antilock system prevents lockup during high slip conditions by modulating fluid apply pressure to the wheel brake units.

Brake fluid apply pressure is modulated according to wheel speed, degree of slip and rate of deceleration. A sensor at each wheel converts wheel speed into electrical signals. These signals are transmitted to the ECU for processing and determination of wheel slip and deceleration rate.

The ABS system has three fluid pressure control channels. The front brakes are controlled separately and the rear brakes in tandem (Fig. 1). A speed sensor input signal indicating a high slip condition activates the ECU antilock program.

Two solenoid valves are used in each antilock control channel. The valves are all located within the HCU valve body and work in pairs to either increase, hold, or decrease apply pressure as needed in the individual control channels.

The solenoid valves are not static during antilock braking. They are cycled continuously to modulate pressure. Solenoid cycle time in antilock mode can be measured in milliseconds.

HCU OPERATION

Normal Braking

During normal braking, the HCU solenoid valves and pump are not activated. The master cylinder and power booster operate the same as a vehicle without an ABS brake system.

Antilock Pressure Modulation

Solenoid valve pressure modulation occurs in three stages which are: pressure increase, pressure hold, and pressure decrease. The valves are all contained in the valve body portion of the HCU.

Pressure Decrease

The outlet valve is opened and the inlet valve is closed during the pressure decrease cycle (Fig. 6).

A pressure decrease cycle is initiated when speed sensor signals indicate high wheel slip at one or more wheels. At this point, the ECU opens the outlet valve, which also opens the return circuit to the accumulators. Fluid pressure is allowed to bleed off (decrease) as needed to prevent wheel lock.

Once the period of high wheel slip has ended, the ECU closes the outlet valve and begins a pressure increase or hold cycle as needed.

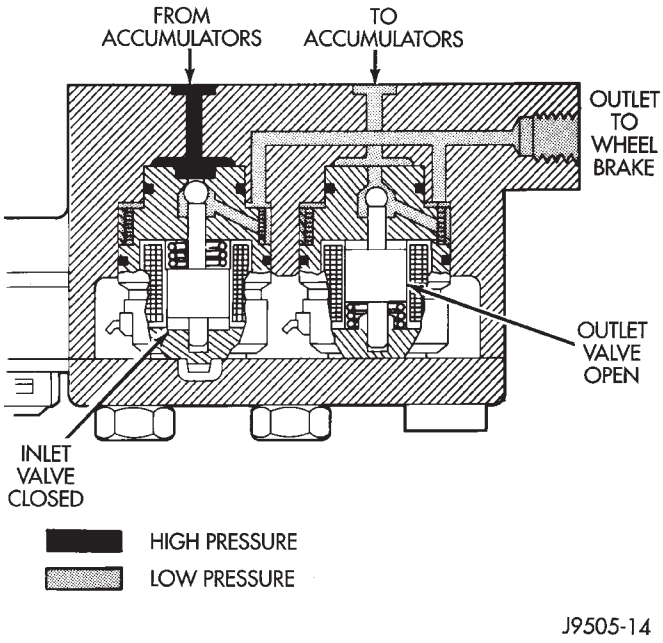

Fig. 6 Pressure Decrease Cycle

Pressure Hold

Both solenoid valves are closed in the pressure hold cycle (Fig. 7). Fluid apply pressure in the control channel is maintained at a constant rate. The ECU maintains the hold cycle until sensor inputs indicate a pressure change is necessary.

Pressure Increase

The inlet valve is open and the outlet valve is closed during the pressure increase cycle (Fig. 8). The pressure increase cycle is used to counteract unequal wheel speeds. This cycle controls re-application of fluid apply pressure due to changing road surfaces or wheel speed.

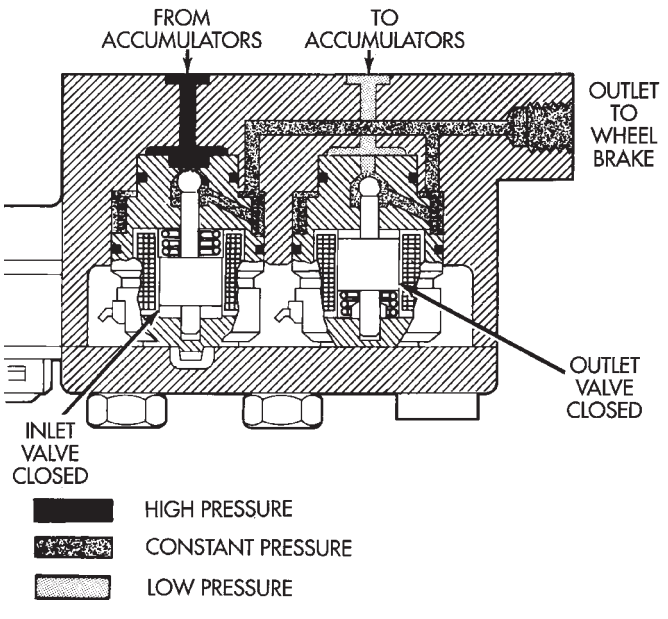

Fig. 7 Pressure Hold Cycle

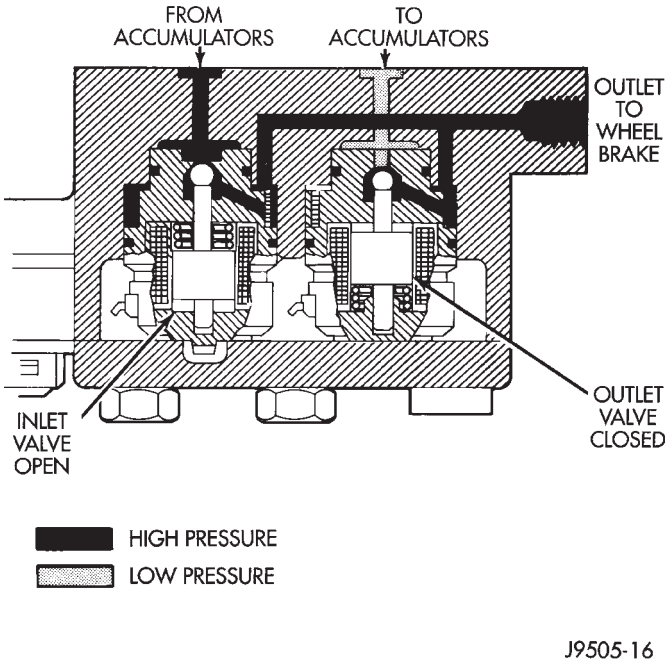

Fig. 8 Pressure Increase Cycle

WHEEL SPEED SENSOR OPERATION

Wheel speed input signals are generated by a sensor and tone ring at each wheel. The sensors, which are connected directly to the ECU, are mounted on brackets attached to the front steering knuckles and rear brake support plates.

The sensor triggering devices are the tone rings which are similar in appearance to gears. The tone rings are located on the outboard end of each front/rear axle shaft. The speed sensors generate a signal whenever a tone ring tooth rotates past the sensor pickup face.

The wheel speed sensors provide the input signal to the ECU. If input signals indicate ABS mode braking, the ECU causes the HCU solenoids to decrease, hold, or increase fluid apply pressure as needed.

The HCU solenoid valves are activated only when wheel speed input signals indicate that a wheel is approaching a high slip, or lockup condition. At this point, the ECU will cycle the appropriate wheel control channel solenoid valves to prevent lockup.

The wheel sensors provide speed signals whenever the vehicle wheels are rotating. The ECU examines these signals for degree of deceleration and wheel slip. If signals indicate normal braking, the solenoid valves are not activated. However, when incoming signals indicate the approach of wheel slip, or lockup, the ECU cycles the solenoid valves as needed.

ACCELERATION SWITCH OPERATION

The ECU monitors the acceleration switch at all times. The switch assembly contains three mercury switches that monitor vehicle ride height and deceleration rates (G-force). Sudden, rapid changes in vehicle and wheel deceleration rate, triggers the switch sending a signal to the ECU. The switch assembly provides three deceleration rates; two for forward braking and one for rearward braking.

ECU OPERATION

The antilock ECU controls all phases of antilock operation. It monitors and processes input signals from the system sensors.

It is the ECU that activates the solenoid valves to modulate apply pressure during antilock braking. The ECU program is able to determine which wheel control channel requires modulation and which fluid pressure modulation cycle to use. The ECU cycles the solenoid valves through the pressure decrease, hold and increase phases.

ABS COMPONENT SERVICEABILITY

The ECU, acceleration sensor, wheel sensors, and wire harnesses are serviced as assemblies only. The axle shaft tone wheels are also not serviceable. If a tone wheel becomes damaged, it will be necessary to replace the axle shaft, or disc brake rotor and hub assembly.

SPEED SENSOR AIR GAP

Front sensor air gap is fixed and not adjustable. Only rear sensor air gap is adjustable.

Although front air gap is not adjustable, it can be checked if diagnosis indicates this is necessary. Front

air gap should be 0.40 to 1.3 mm (0.0157 to 0.051 in.). If gap is incorrect, the sensor is either loose, or damaged.

A rear sensor air gap adjustment is only needed when reinstalling an original sensor. Replacement sensors have an air gap spacer attached to the sensor pickup face. The spacer establishes correct air gap when pressed against the tone ring during installation. As the tone ring rotates, it peels the spacer off the sensor to create the required air gap. Rear sensor air gap is 0.92-1.45 mm (0.036-0.057 in.).

Sensor air gap measurement, or adjustment procedures are provided in this section. Refer to the front, or rear sensor removal and installation procedures as required.

FRONT WHEEL SENSOR REMOVAL

(1) Raise vehicle and turn wheel outward for easier access to sensor.

(2) Remove sensor wire from mounting brackets.

(3) Clean sensor and surrounding area with shop towel before removal.

(4) Remove bolt attaching sensor to steering knuckle and remove sensor.

(5) remove sensor wire from brackets on body and steering knuckle.

(6) Unseat sensor wire grommet in wheel house panel.

(7) In engine compartment, disconnect sensor wire connector at harness plug. Then remove sensor and wire.

FRONT WHEEL SENSOR INSTALLATION

(1) If **original** sensor will be installed, wipe all traces of old spacer material off sensor pickup face. Use a dry shop towel for this purpose.

(2) Apply Mopar Lock N' Seal or Loctite 242 to bolt that secures sensor in steering knuckle. Use new sensor bolt if original bolt is worn or damaged.

(3) Position sensor on steering knuckle. Seat sensor locating tab in hole in knuckle and install sensor attaching bolt finger tight.

(4) Tighten sensor attaching bolt to 14 N·m (11 ft. lbs.) torque.

(5) If original sensor has been installed, check sensor air gap. Air gap should be 0.40 to 1.3 mm (0.0157 to 0.051 in.). If gap is incorrect, sensor is either loose, or damaged.

(6) Secure sensor wire to steering knuckle and body brackets.

(7) Route sensor wire forward and behind shock absorber. Then attach sensor wire to spring seat bracket with grommets on sensor wire.

(8) Route sensor wire to outer sill bracket. Remove all twists or kinks from wire.

(9) Attach sensor wire to sill bracket with grommet. Be sure wire is free of twists and kinks.

(10) Verify sensor wire routing. Wire should loop forward and above sill bracket. Loose end of wire should be below sill bracket and towards brake hose.

(11) Seat sensor wire grommet in body panel and clip wire to brake line at grommet location.

(12) Connect sensor wire to harness in engine compartment.

REAR WHEEL SENSOR REMOVAL

(1) On XJ models, raise and fold rear seat forward for access to rear sensor connectors (Fig. 9).

(2) Disconnect sensors at rear harness connectors.

(3) Push sensor grommets and sensor wires through floorpan.

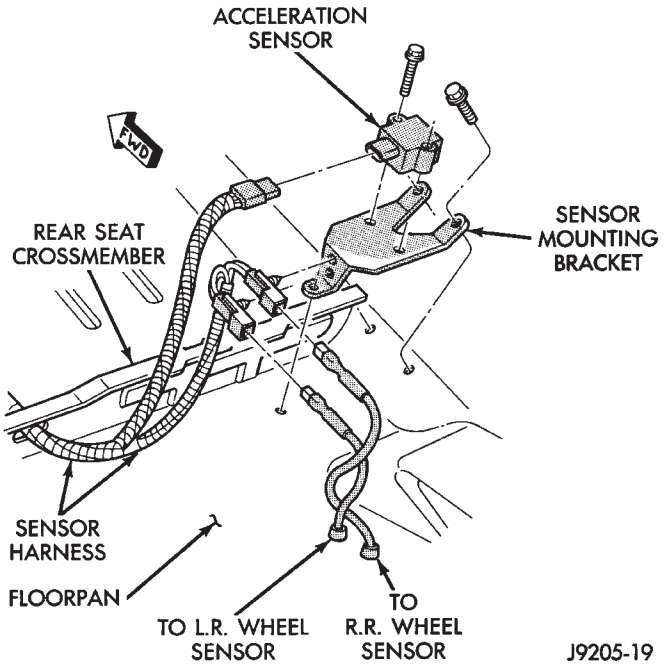

Fig. 9 Acceleration Switch And Rear Sensor Connections (XJ)

(4) Raise vehicle.

(5) Disconnect sensor wires at rear axle connectors.

(6) Remove wheel and tire assembly.

(7) Remove brake drum.

(8) Remove clips securing sensor wires to brakelines, rear axle and, brake hose.

(9) Unseat sensor wire support plate grommet.

(10) Remove bolt attaching sensor to bracket and remove sensor.

REAR WHEEL SENSOR INSTALLATION AND ADJUSTMENT

(1) If **original sensor** is being installed, remove any remaining pieces of cardboard spacer from sensor pickup face. Use dry shop towel only to remove old spacer material.

(2) Insert sensor wire through support plate hole. Then seat sensor grommet in support plate.

(3) Apply Mopar Lock N' Seal or Loctite 242 to

original sensor bolt. Use new bolt if original is worn or damaged.

(4) Install sensor bolt finger tight only at this time.

(5) If **original** rear sensor was installed, adjust sensor air gap to 0.92-1.45 mm (0.036-0.057 in.). Use feeler gauge to measure air gap (Fig. 10). Tighten sensor bolt to 11 N·m (11 ft. lbs.) torque.

(6) If **new** sensor was installed, push cardboard spacer on sensor face against tone ring (Fig. 11). Then tighten sensor bolt to 8 N·m (6 ft. lbs.) torque. Correct air gap will be established as tone ring rotates and peels spacer off sensor face.

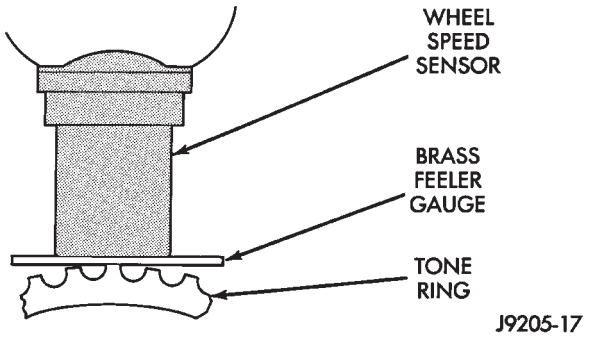

Fig. 10 Setting Air Gap On Original Rear Sensor

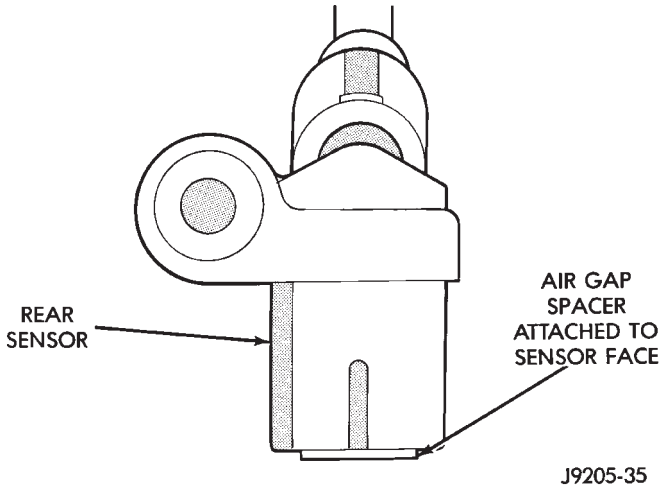

Fig. 11 Location Of Spacer On New Rear Sensor

(7) On YJ, connect rear sensor wires to connectors at axle. On XJ, route sensor wires to rear seat area.

(8) Feed sensor wires through floorpan access hole and seat sensor grommets in floorpan.

(9) Verify that rear sensor wires are secured to rear brake hose and axle with clips. Verify that wire is clear of rotating components.

(10) Install brake drum and wheel.

(11) Lower vehicle.

(12) On XJ, connect sensor wire to harness connector. Then reposition carpet and fold rear seat down.

ACCELERATION SWITCH REMOVAL

(1) On XJ models, tilt rear seat assembly forward for access to sensor (Fig. 12).

(2) On YJ models, move driver seat forward or rearward for access to sensor and mounting bracket (Fig. 12).

(3) Disconnect switch harness.

(4) On XJ models, remove screws attaching switch to bracket. Then remove switch.

(5) On YJ models, remove screws attaching switch bracket to floorpan. Then remove switch from bracket.

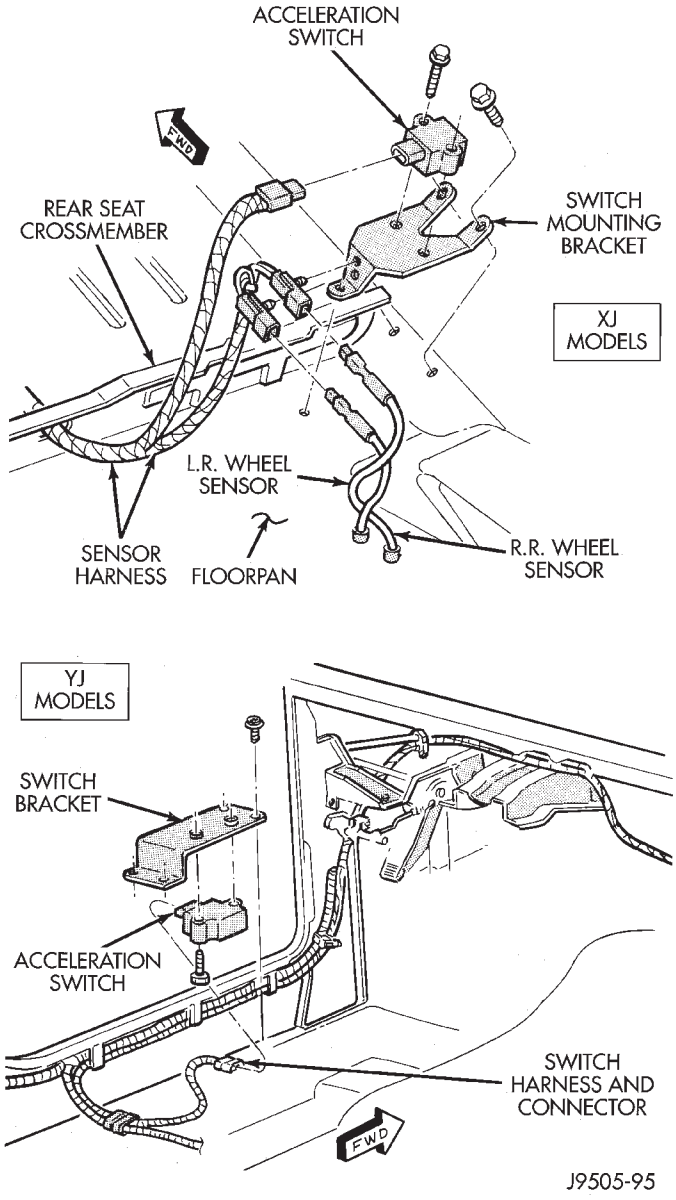

Fig. 12 Acceleration Switch Mounting (XJ/YJ)

ACCELERATION SWITCH INSTALLATION

(1) Note position of locating arrow on switch. Switch must be positioned so arrow faces forward.

CAUTION: The mercury switch (inside the acceleration switch), will not function properly if the switch is mispositioned. Verify that the switch locating arrow is pointing to the front of the vehicle.

(2) Position switch in mounting bracket.

(3) Install and tighten switch attaching screws to 2-4 N·m (17-32 in. lbs.) torque.

(4) Connect harness to switch. Be sure harness connecter is firmly seated.

(5) Move seat back to normal position.

ECU REMOVAL (XJ MODELS)

On left hand drive models, the ECU is located to the right of the steering column near the heater duct (Fig. 13). On right hand drive models, the ECU is located near the right side cowl panel adjacent to the dash (Fig. 14).

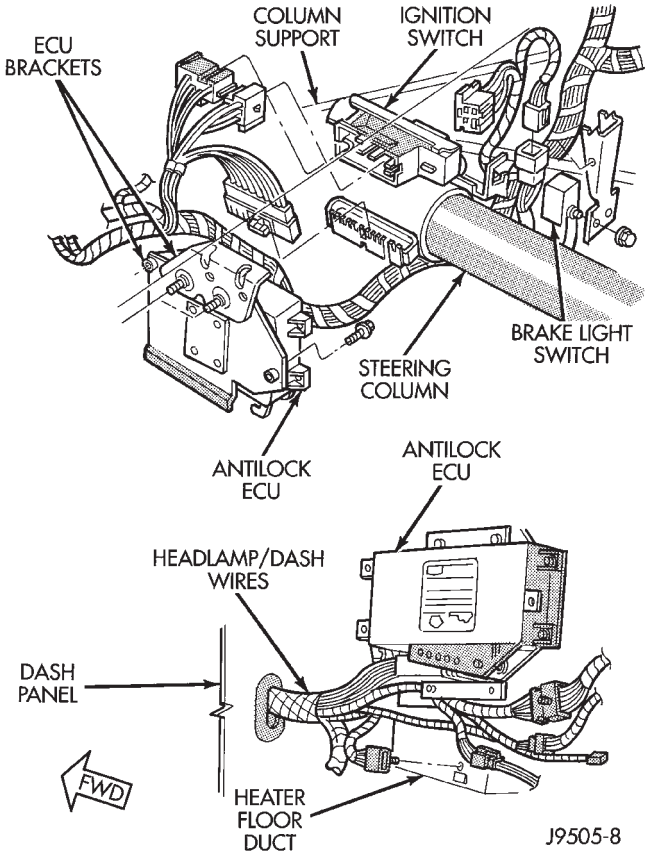

Fig. 13 Antilock ECU Mounting (Left Hand Drive XJ)

(1) Turn ignition key to Off position.

(2) Remove lower finish panel from instrument panel for added working clearance if necessary.

(3) Remove ECU mounting bracket attaching bolts/nuts.

(4) Release strap that secures ECU harness connector to pin terminals (Fig. 15). Use tool such as small flat blade screwdriver to lift and release strap.

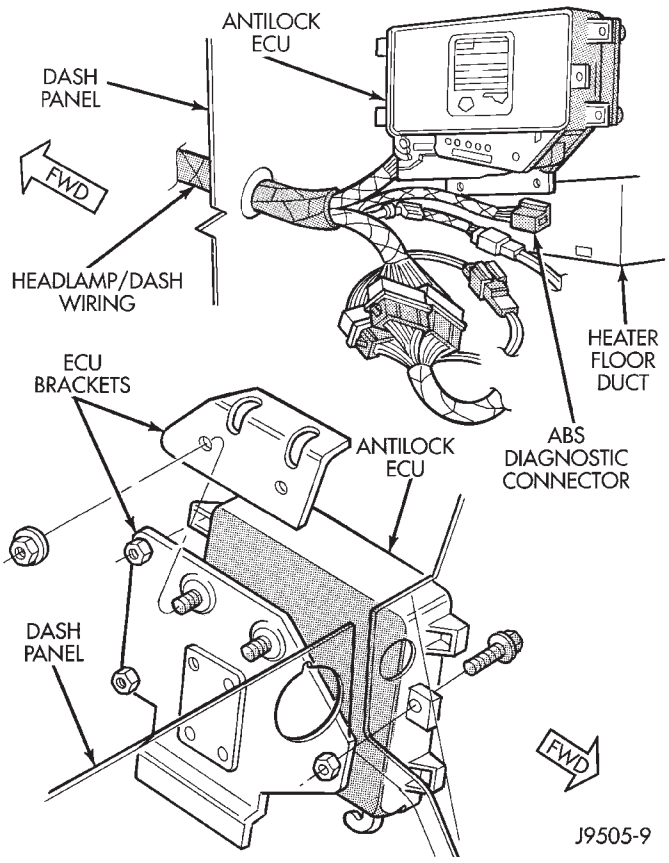

Fig. 14 Antilock ECU Mounting (Right Hand Drive XJ)

(5) Disconnect harness connector from ECU. Tilt connector upward to disengage it from ECU pin terminals. Then slide it out of retaining tangs in ECU.

(6) Remove ECU and mounting bracket as assembly.

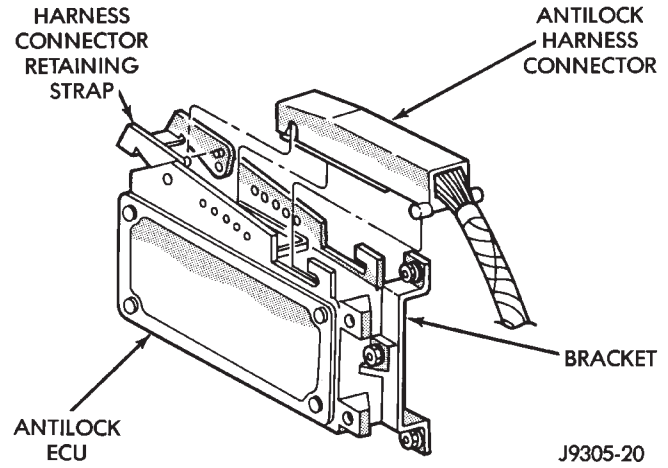

Fig. 15 ECU Harness Connector Attachment (XJ)

ECU INSTALLATION (XJ MODELS)

(1) If ECU is being replaced, install it on mounting bracket and tighten fasteners to 10-14 N·m (85-125 in. lbs.) torque

(2) Align and attach harness connector to ECU. Slide connector into engagement with tangs on ECU. Then tilt connector downward and into engagement with ECU pin terminals. Exercise care as pin terminals can be damaged if connector is forced into place.

(3) Connect harness to security alarm module, if equipped.

(4) Position ECU bracket under instrument panel.

(5) Install and tighten ECU mounting bracket bolts/nuts to 8-14 N·m (75- 125 in. lbs.) torque.

(6) Install trim panel on instrument panel, if removed.

ECU REMOVAL/INSTALLATION (YJ MODELS)

The antilock ECU is attached to the dash panel inside the passenger compartment. It is positioned just above the heater/air conditioning plenum housing, in line with the glove box (Fig. 16).

The ECU is attached to the dash panel by bolts and nuts that are accessible from the engine compartment. The fasteners are located just to the right of the battery.

On models with air conditioning, it will be necessary to remove the air conditioning fascia panel and ducts for access to the ECU and harness connecter.

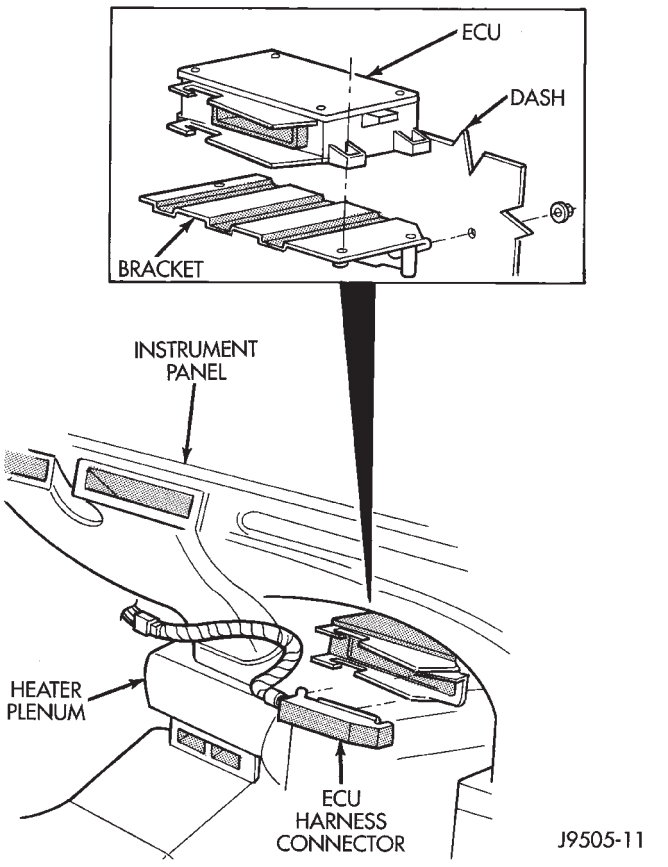

Fig. 16 ECU Location (YJ)

HCU REMOVAL (XJ)

A new design HCU is used in 1995 models. The new HCU has built-in accumulators that store the extra fluid released for antilock mode operation. As a result, the master cylinder and HCU are no longer interconnected by hoses. **The 1995 and prior hydraulic control units are NOT interchangeable.**

(1) Disconnect vent hoses at air cleaner cover.

(2) Loosen clamp securing air cleaner hose to intake manifold. Use screwdriver to tap clamp loose.

(3) Remove air cleaner cover and hose. Then remove air filter from air cleaner shell (Fig. 17).

(4) Remove two bolts and one nut that secure air cleaner housing to body panel (Fig. 17).

(5) Remove air cleaner housing from engine compartment.

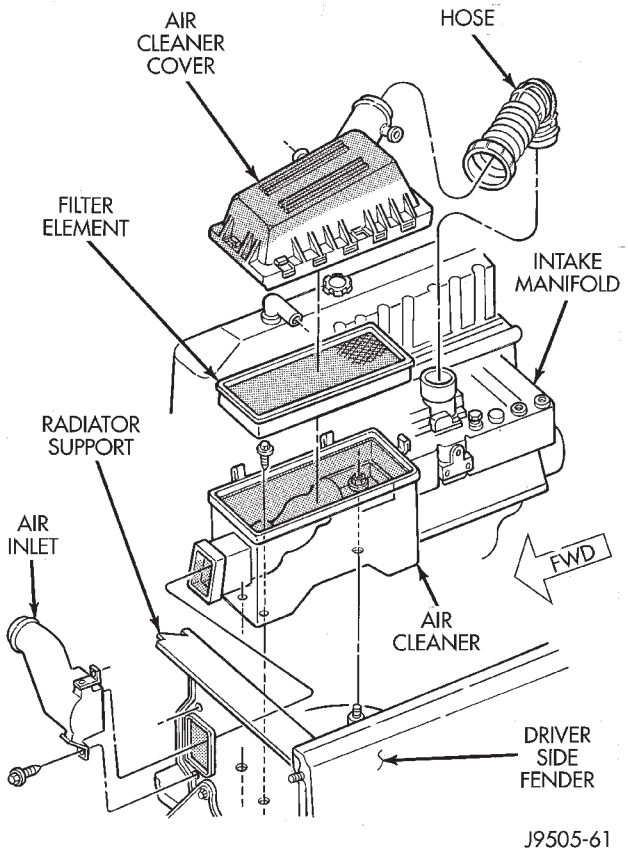

Fig. 17 Air Cleaner Components

(6) Disconnect both flex brakelines at HCU (Fig. 18).

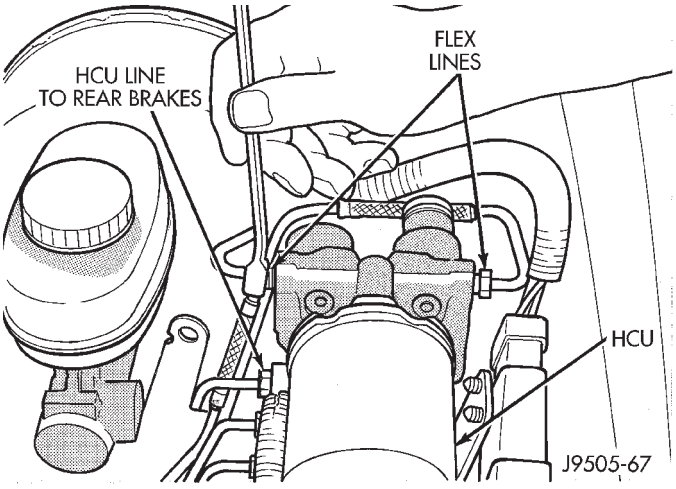

Fig. 18 Disconnecting Flex Lines From HCU

(7) Disconnect HCU solenoid harness from main harness (Fig. 19).

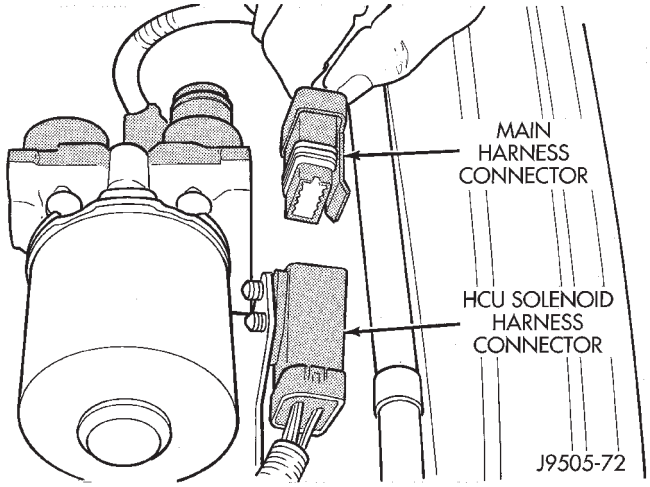

Fig. 19 Disconnecting HCU Solenoid Harness

(8) Disconnect HCU pump motor harness (Fig. 20).

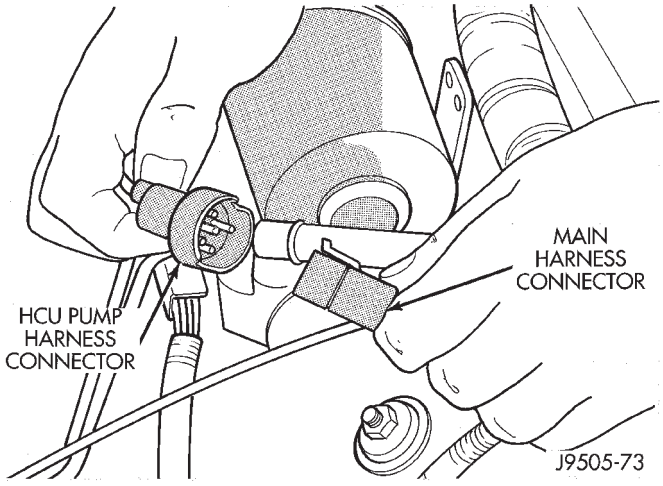

Fig. 20 Disconnecting HCU Pump Harness

(9) If HCU mounting bracket will be left in place, it will be necessary to remove HCU solenoid harness connecter from mounting bracket. Remove connecter fasteners, by squeezing them closed with needle nose pliers; then pulling them out of bracket.

(10) Disconnect lines to front/rear brakes at lower left side of HCU (Fig. 21).

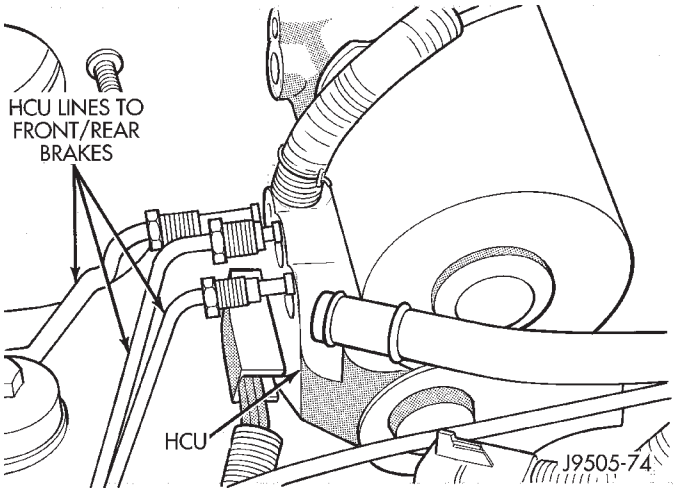

Fig. 21 HCU Front/Rear Brakeline Connections

(11) Remove HCU as follows:

(a) If only the HCU will be removed, remove three shoulder bolts attaching HCU to mounting bracket and remove HCU (Fig. 22).

(b) If HCU and bracket will be removed as assembly, remove three nuts attaching HCU to stud plate and remove HCU and bracket as assembly.

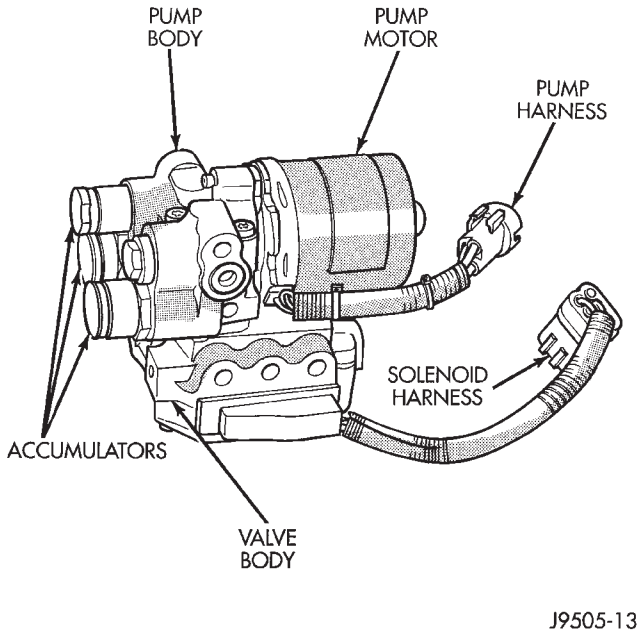

Fig. 22 HCU Assembly

HCU INSTALLATION (XJ)

(1) Install HCU as follows:

(a) If only the HCU was removed, position HCU in mounting bracket. Then install and tighten three shoulder bolts that attach HCU to bracket (Figs. 23 and 24). One bolt is used at forward end of bracket and two at rear as shown.

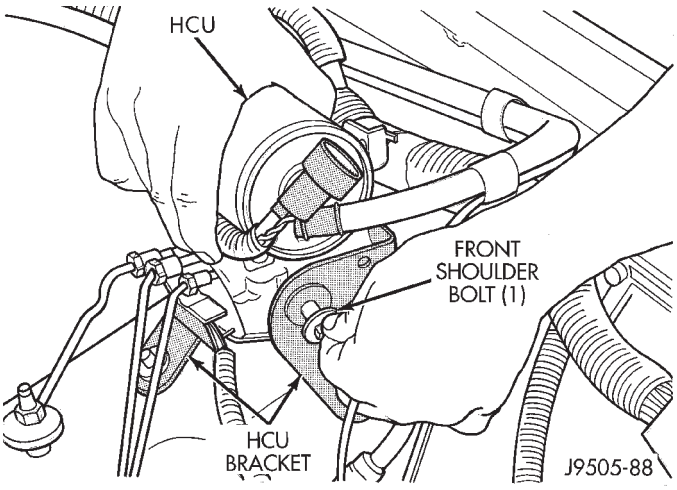

Fig. 23 Installing HCU Front Shoulder Bolt

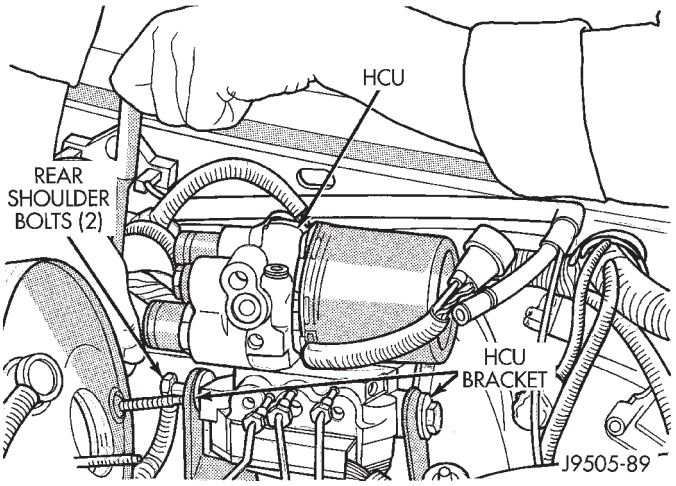

Fig. 24 Installing HCU Rear Shoulder Bolts

(b) If HCU and bracket were removed as assembly, position bracket on studs and install attaching nuts. Tighten nuts to 10-13 N·m (92-112 in. lbs.) torque.

(c) On right hand drive models, If brackets were removed, assemble brackets. Then position lower bracket on body studs and install attaching nuts and the one attaching bolt (Fig. 25).

(2) If HCU mounting bracket was not removed, press solenoid harness connecter fasteners into mounting bracket.

(3) Connect HCU pump motor and solenoid harnesses (Figs. 19 and 20).

(4) Connect brakelines from front/rear brakes to HCU. Start brakeline fittings in HCU ports by hand

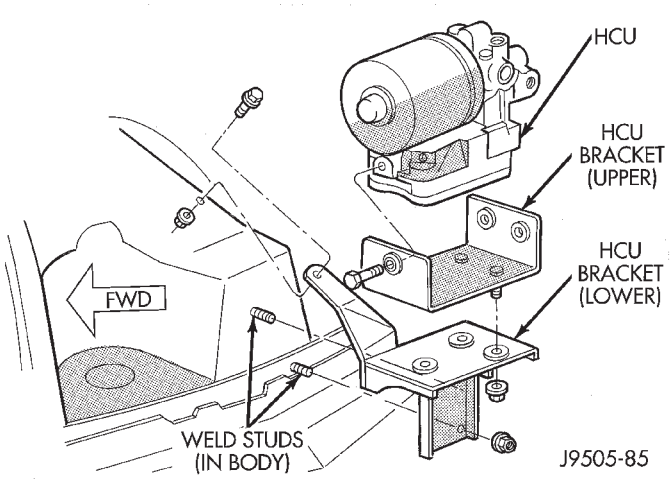

Fig. 25 HCU And Bracket Mounting (RHD Models)

to avoid cross threading (Fig. 26). Then tighten line fittings snug but not to required torque at this time.

(5) Connect flex lines to HCU (Fig. 18). Start

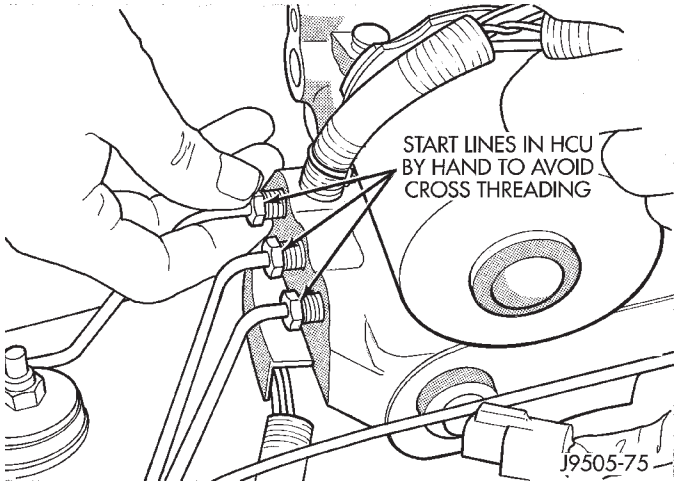

Fig. 26 Starting Brakelines In HCU (By Hand)

brakeline fittings in flex line ports by hand to avoid cross threading. Then tighten line fittings snug but not to required torque at this time.

(6) Bleed brakes. Refer to procedure in Brake Fluid-Brake Bleeding-Brakelines And Hoses section.

(7) Tighten brakeline fittings to following torques after brake bleeding: 15- 18 N·m (130-160 in. lbs.) at HCU and master cylinder and 18-24 N·m (160-210 in. lbs.) at combination valve.

(8) Install engine air cleaner assembly and hoses.

(9) Connect vacuum lines to manifold fittings.

(10) Check brake pedal action before moving vehicle. Bleed brakes again if pedal is not firm (feels soft/spongy).

HCU REMOVAL (YJ)

(1) Place shop towels under master cylinder and HCU brakelines.

(2) Disconnect flex lines at upper part of HCU.

(3) Disconnect solenoid and pump harness wires at HCU harness connecters.

(4) Disconnect lines to front/rear brakes at lower part of HCU.

(5) Remove shoulder bolts attaching HCU to mounting bracket and remove HCU.

HCU INSTALLATION (YJ)

(1) Position HCU in mounting bracket (Fig. 27).

(2) Install shoulder bolts that attach HCU to bracket.

(3) Connect brakelines to HCU. Start brakeline fittings by hand to avoid cross threading. Tighten fittings snug but not to torque at this time.

(4) Connect HCU pump and solenoid harness wires to engine compartment harness.

(5) Fill and bleed brake system.

(6) Tighten brakeline fittings to 15-18 N·m (130-160 in. lbs.) at HCU and master cylinder, and to 18-24 N·m (160-210 in. lbs.) at combination valve.

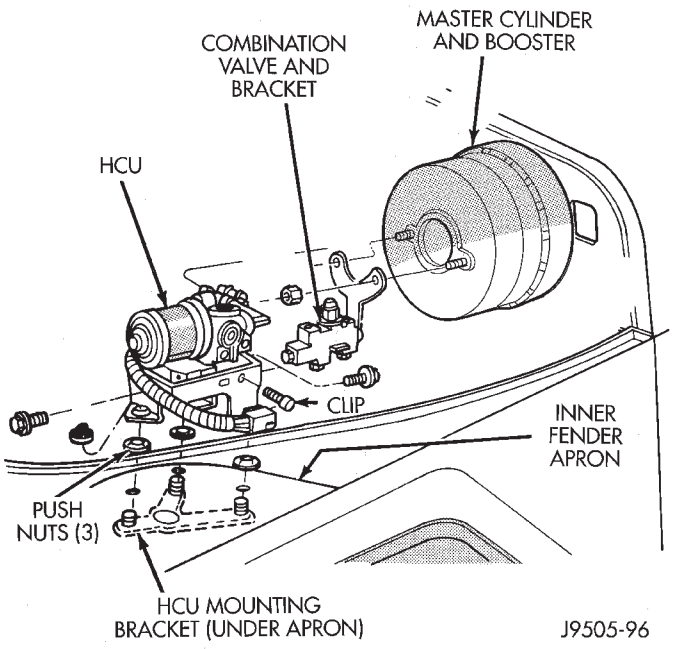

Fig. 27 HCU Mounting (YJ)

DISC BRAKES

INDEX

	page		page
Caliper Assembly	50	Disc Brake Rotor Thickness	52
Caliper Cleaning and Inspection	50	Disc Brake Rotor Thickness Variation	52
Caliper Disassembly	48	Disc Brakeshoe Installation	47
Caliper Installation	51	Disc Brakeshoe Removal	46
Caliper Operation and Wear Compensation	45	General Information	45
Caliper Removal	48	Rotor Installation	51
Disc Brake Rotor Refinishing	53	Rotor Removal	51
Disc Brake Rotor Runout	52	Wheel Nut Tightening	54

GENERAL INFORMATION

Jeep XJ/YJ models are equipped with single piston, floating-type disc brake calipers. Ventilated, cast rotors are used for all applications.

The disc brake calipers are supported in mounting arms that are an integral part of the steering knuckle. The calipers slide on mounting bolts that also attach the calipers to the steering knuckle.

CALIPER OPERATION AND WEAR COMPENSATION

Caliper Operation

The significant feature of single piston caliper operation is that the calipers are free to slide laterally on the mounting bolts. It is the freedom of lateral movement that allows continuous compensation for lining wear.

A simplified cross section of a single piston caliper is shown in Figure 1. The illustration graphically portrays the forces at work when the brakes are applied.

Upon brake application, fluid pressure exerted against the caliper piston increases greatly. Of equal importance, is the fact that fluid pressure is exerted equally and in all directions. What this means, is that pressure in the caliper bore, will be exactly the same as pressure on the piston. In other words, pressure against piston and caliper bore is equal.

Fluid pressure applied to the piston is transmitted directly to the inboard brakeshoe. This forces the shoe lining against the inner surface of the disc brake rotor (Fig. 1).

At the same time, fluid pressure within the piston bore, forces the caliper to slide inward on the mounting bolts. This action brings the outboard brakeshoe lining into contact with the outer surface of the disc brake rotor (Fig. 1).

In summary, fluid pressure acting simultaneously on both piston and caliper, produces a strong clamping action. When sufficient force is applied, friction will stop the rotors from turning and bring the vehicle to a stop.

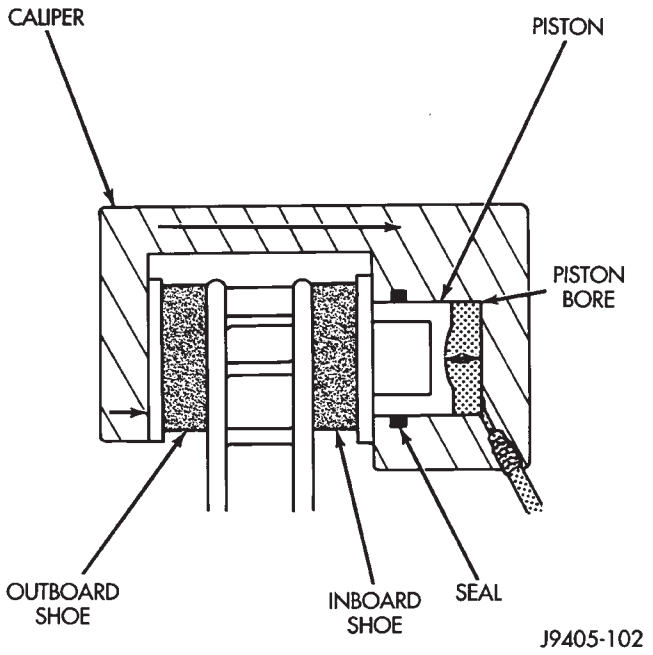

Fig. 1 Disc Brake Caliper Operation

Brakeshoe Wear Compensation

Application and release of the brake pedal generates only a very slight movement of the caliper and piston. Upon release of the pedal, the caliper and piston return to a rest position. The brakeshoes do not retract an appreciable distance from the rotor. In fact, clearance is usually at, or close to zero. The reasons for this are to keep road debris from getting between the rotor and lining and in wiping the rotor surface clear each revolution.

The caliper piston seal controls the amount of piston extension needed to compensate for normal lining wear.

During brake application, the seal is deflected outward by fluid pressure and piston movement (Fig. 2). When the brakes (and fluid pressure) are released, the seal relaxes and retracts the piston.

The amount of piston retraction is determined by brakelining wear. Generally, the amount is just enough to maintain contact between the piston and inboard brakeshoe. Brakelining running clearance at the rotor, will be held between zero and a maximum of 0.12 mm (0.005 in.).

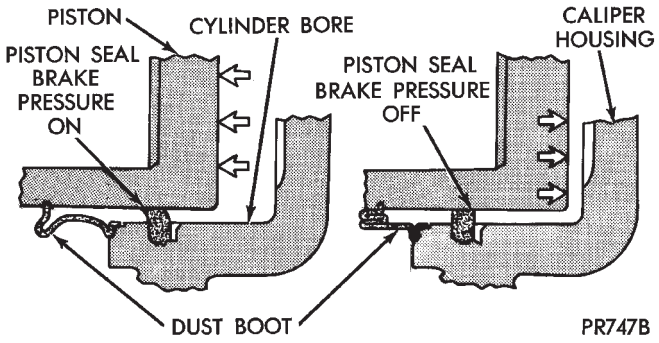

Fig. 2 Lining Wear Compensation By Piston Seal

DISC BRAKESHOE REMOVAL

(1) Raise vehicle and remove front wheels.

(2) Drain small amount of fluid from master cylinder front brake reservoir with suction gun.

(3) Bottom caliper piston in bore with C-clamp. Position clamp screw on outboard brakeshoe and clamp frame on rear of caliper. Typical C-clamp attachment is shown in Figure 3. **Do not allow clamp screw to bear directly on outboard shoe retainer spring. Use wood or metal spacer between shoe and clamp screw if necessary.**

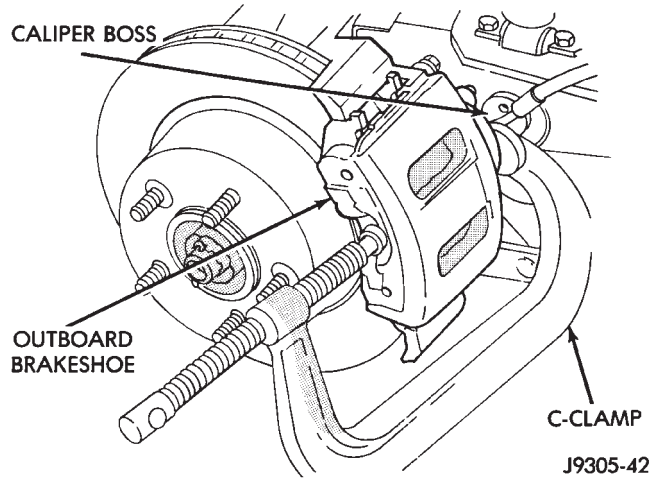

Fig. 3 Bottoming Caliper Piston With C-Clamp

(4) Remove caliper mounting bolts (Fig. 4). **If brakeshoes are being removed to correct a pull or drag condition, verify length of caliper bolts as they may be incorrect length. Refer to bolt information in brakeshoe installation procedure.**

(5) Tilt top of caliper outward. Use pry tool if necessary (Fig. 5).

(6) Lift caliper off steering knuckle (Fig. 6).

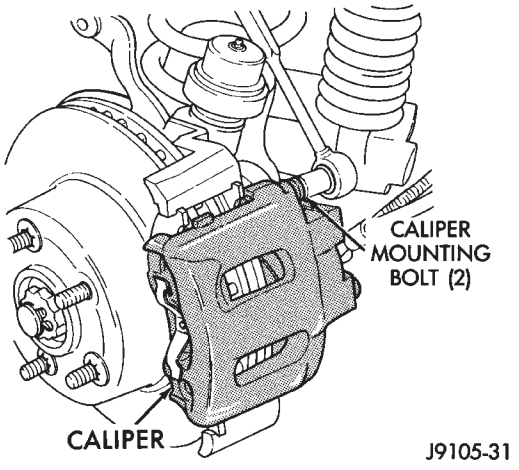

Fig. 4 Removing/Installing Caliper Mounting Bolts

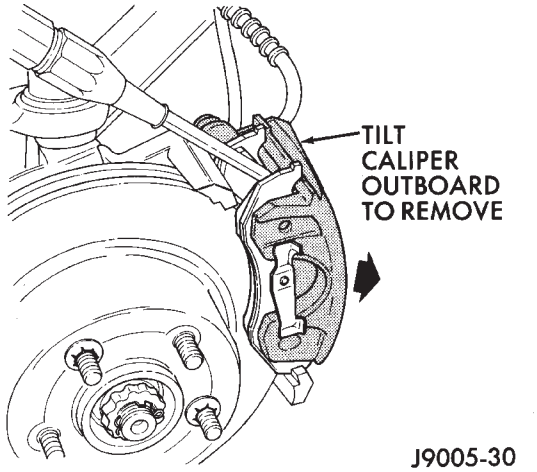

Fig. 5 Tilting Caliper Outward

(7) **If original brakeshoes will be used, keep them in sets (left and right); they are not interchangeable.**

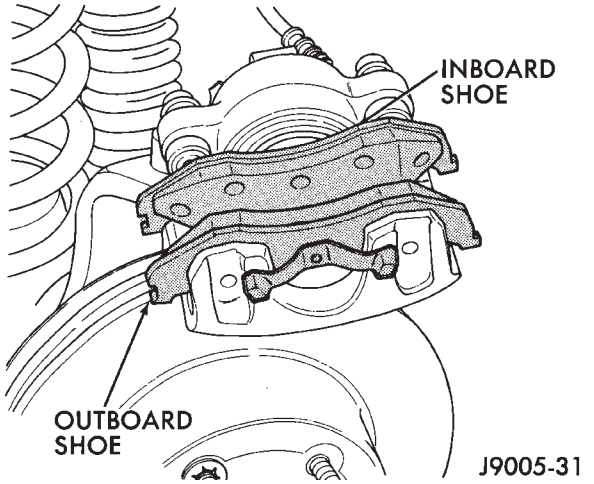

Fig. 6 Caliper Removal

(8) Remove outboard shoe. Press one end of shoe inward to disengage shoe lug. Then rotate shoe upward until retainer spring clears caliper. Press opposite end of shoe inward to disengage shoe lug and rotate shoe up and out of caliper (Fig. 7).

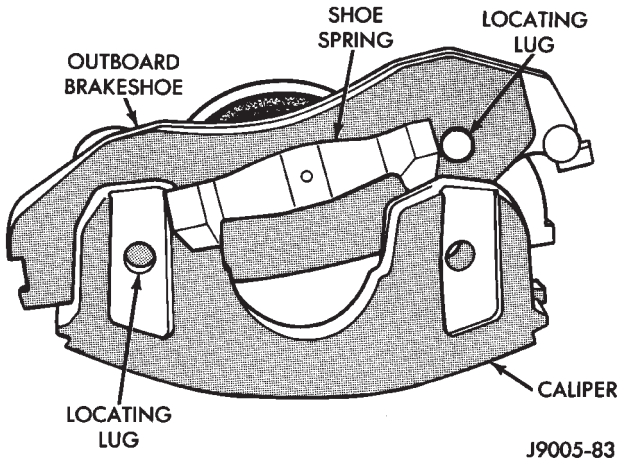

Fig. 7 Removing Outboard Brakeshoe

(9) Remove inboard shoe. Grasp ends of shoe and tilt shoe outward to release springs from caliper piston (Fig. 8). Then remove shoe from caliper.

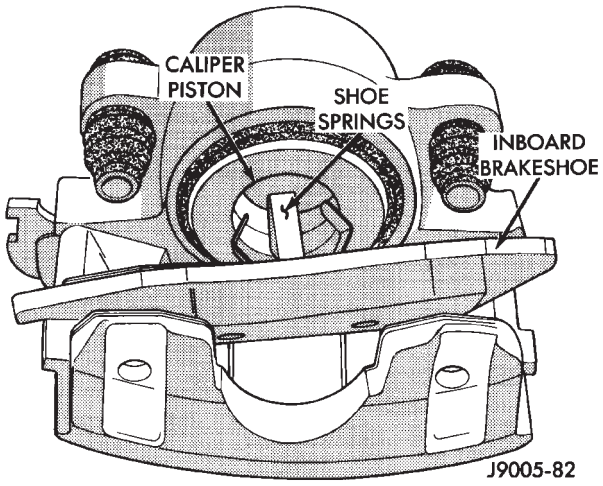

Fig. 8 Removing Inboard Brakeshoe

(10) Secure caliper to nearby suspension part with wire. **Do not allow brake hose to support caliper weight.**

(11) Wipe caliper off with shop rags or towels. **Do not use compressed air. Compressed air can unseat dust boot and force dirt into piston bore.**

(12) Inspect condition of caliper piston dust boot (Fig. 9). Overhaul caliper if there is evidence of leakage past piston and dust boot. Then inspect caliper bushings and boots (Fig. 9). Replace boots if torn or cut. If bushings or boots are damaged, replace them.

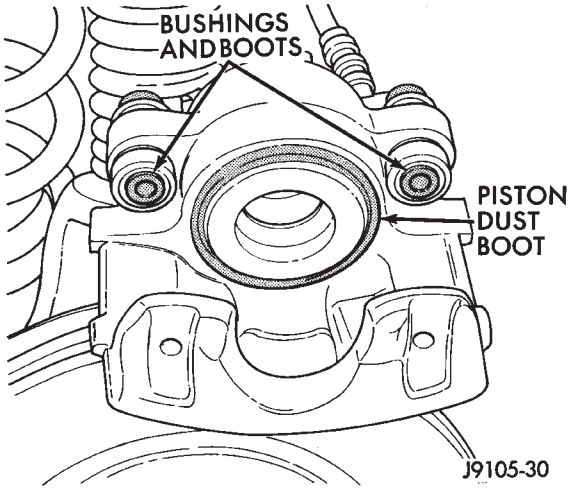

Fig. 9 Caliper Dust Boots And Bushing Locations

DISC BRAKESHOE INSTALLATION

(1) Clean brakeshoe mounting ledge slide surfaces of steering knuckle with wire brush. Then apply light coat of Mopar multi-mileage grease to slide surfaces (Fig. 10).

(2) Lubricate caliper mounting bolts and bushings (Fig. 10). Use GE 661 or Dow 111 silicone grease.

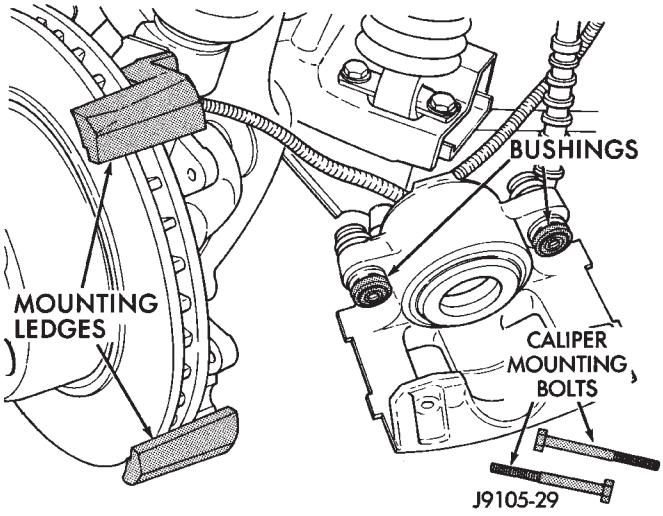

Fig. 10 Caliper Lubrication Points

(3) Keep new or original brakeshoes in sets. Do not interchange them.

(4) Install inboard shoe in caliper (Fig. 11). Be sure shoe retaining springs are fully seated in caliper piston.

(5) Install outboard shoe in caliper (Fig. 12). Start one end of shoe in caliper. Rotate shoe downward and into place until shoe locating lugs and shoe spring are seated.

(6) Verify that locating lugs on outboard shoe are seated in caliper (Fig. 6).

(7) Install caliper. Position notches at lower end of brakeshoes on bottom mounting ledge (Fig. 13). Then

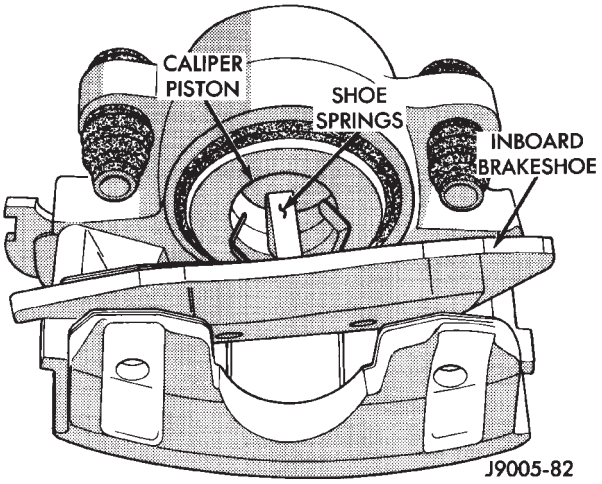

Fig. 11 Installing Inboard Brakeshoe

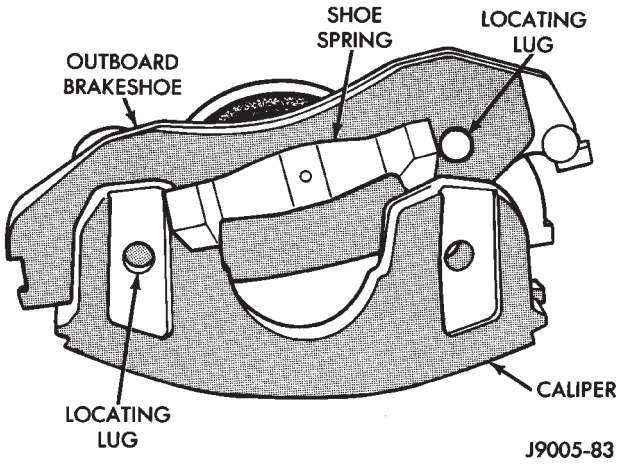

Fig. 12 Installing Outboard Brakeshoe

install caliper over rotor and seat upper ends of brakeshoes on top mounting ledge (Fig. 11).

CAUTION: Before securing the caliper, be sure the caliper brake hose is not twisted, kinked or touching any chassis components. Also be sure the hose is clear of all suspension and steering components. Loosen and reposition the hose if necessary.

(8) Install and tighten caliper mounting bolts to 10-20 N·m (7-15 ft. lbs.) torque.

CAUTION: If new caliper bolts are being installed, or if the original reason for repair was a drag/pull condition, check caliper bolt length before proceeding. If the bolts have a shank length greater than 67.6 mm (2.66 in.), they will contact the inboard brakeshoe causing a partial apply condition. Refer to Figure 14 for required caliper bolt length.

(9) Install wheels. Tighten lug nuts to 102 N·m (75 ft. lbs.) torque.

(10) Pump brake pedal until caliper pistons and brakeshoes are seated.

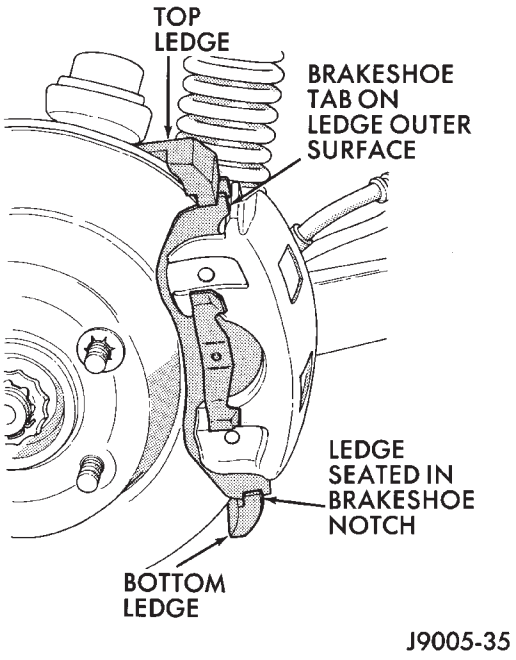

Fig. 13 Caliper Installation

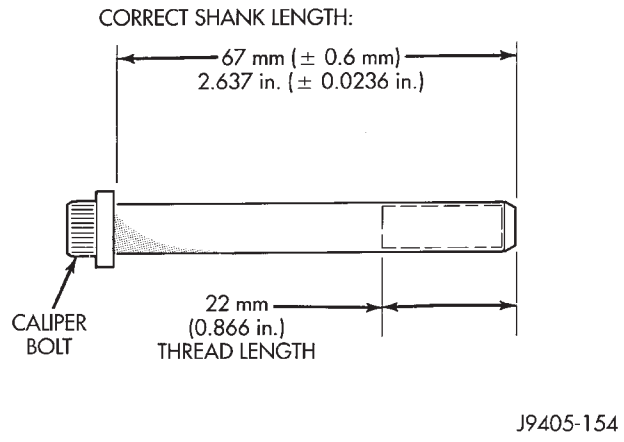

Fig. 14 Caliper Mounting Bolt Dimensions

(11) Top off brake fluid level if necessary. Use Mopar brake fluid or equivalent meeting SAE J1703 and DOT 3 standards only.

CALIPER REMOVAL

(1) Raise vehicle and remove front wheels.

(2) Remove fitting bolt and disconnect front brake hose at caliper. Discard fitting bolt gaskets. They should not be reused.

(3) Remove caliper mounting bolts (Fig. 4).

(4) Rotate caliper rearward by hand or with pry tool (Fig. 5). Then rotate caliper and brakeshoes off mounting ledges.

(5) Remove caliper from vehicle.

CALIPER DISASSEMBLY

(1) Remove brakeshoes from caliper.

(2) Pad interior of caliper with minimum, 2.54 cm (1 in.) thickness of shop towels or rags (Fig. 15). Towels are needed to protect caliper piston during removal.

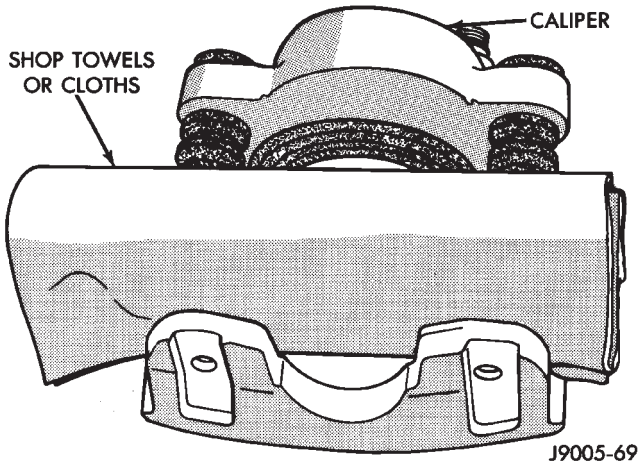

Fig. 15 Padding Caliper Interior To Protect Piston During Removal

(3) Remove caliper piston with **short bursts** of low pressure compressed air. Direct air through fluid inlet port and ease piston out of bore (Fig. 16).

CAUTION: Do not blow the piston out of the bore with sustained air pressure. This could result in a cracked piston. Use only enough air pressure to ease the piston out. In addition, NEVER attempt to catch the piston as it leaves the bore. This will result in personal injury.

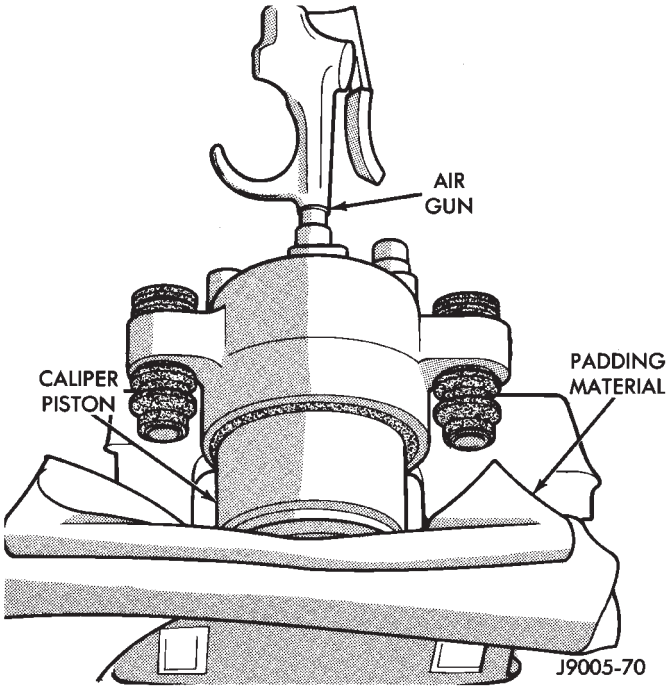

Fig. 16 Removing Caliper Piston

(4) Remove caliper piston dust boot (Fig. 17). Collapse boot with suitable tool and remove and discard boot.

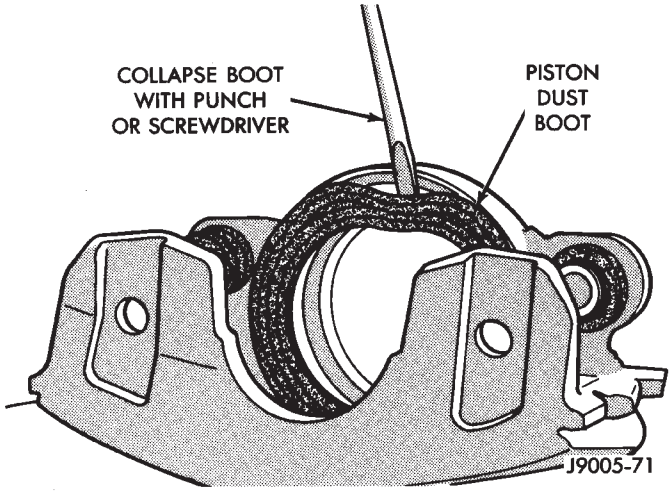

Fig. 17 Removing Caliper Piston Dust Boot

(5) Remove and discard caliper piston seal with wood or plastic tool (Fig. 18). Do not use metal tools as they will scratch piston bore.

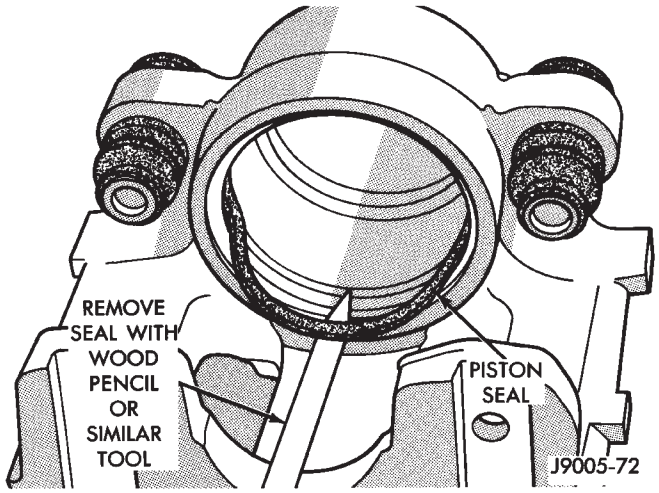

Fig. 18 Removing Caliper Piston Seal

(6) Remove caliper mounting bolt bushings and boots (Fig. 19).

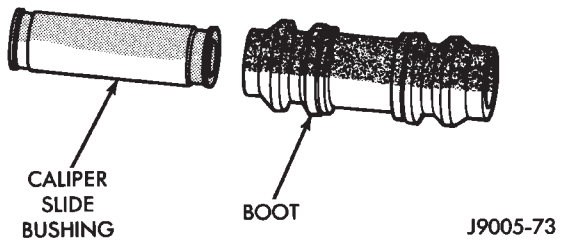

Fig. 19 Caliper Bushing And Boot

CALIPER CLEANING AND INSPECTION

Clean the caliper and piston with Mopar brake cleaner, clean brake fluid, or denatured alcohol only. Do not use gasoline, kerosene, thinner, or similar solvents. These products leave a residue that will damage pistons and seals.

Wipe the caliper and piston dry with lint free towels or use low pressure compressed air.

Inspect the piston and piston bore. Replace the caliper if the bore is corroded, rusted, pitted, or scored. Do not hone the caliper piston bore. Replace the caliper if the bore exhibits any of the aforementioned conditions.

Inspect the caliper piston. The piston is made from a phenolic resin and should be smooth and clean. Replace the piston if cracked, chipped, or scored. Do not attempt to restore a scored, or corroded piston surface by sanding or polishing. The piston must be replaced if damaged.

CAUTION: Never interchange phenolic resin and steel caliper pistons. The seals, seal grooves, caliper bores and piston tolerances are different for resin and steel pistons. Do not intermix these components.

Inspect the caliper mounting bolt bushings and boots. Replace the boots if cut or torn. Clean and lubricate the bushings with GE 661 or Dow 111 silicone grease if necessary.

Inspect condition of the caliper mounting bolts. Replace the bolts if corroded, rusted, or worn. Do not reuse the bolts if unsure of their condition.

Length of the caliper mounting bolts is also extremely important.

Use the replacement bolts specified in the parts catalog at all times. Do not use substitute bolts. Bolts that are too long will partially apply the inboard brakeshoe causing drag and pull. Refer to the caliper and brakeshoe installation procedures for service details and bolt dimensions.

CALIPER ASSEMBLY

(1) Coat caliper piston bore, new piston seal and piston with clean, fresh brake fluid.

(2) Lubricate caliper bushings and interior of bushing boots with GE 661, Dow 111, or Permatex Dielectric silicone grease.

(3) Install bushing boots in caliper first. Then insert bushing into boot and push bushing into place (Fig. 20).

(4) Install new piston seal in caliper bore. Press seal into seal groove with finger (Fig. 21).

(5) Install dust boot on caliper piston (Fig. 22). Slide boot over piston and seat boot in piston groove.

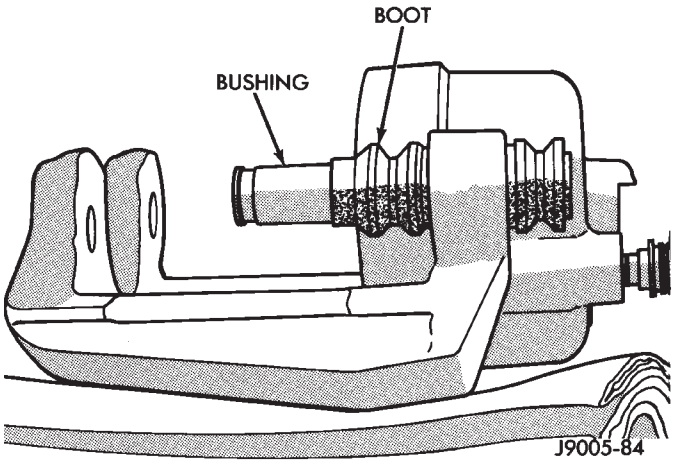

Fig. 20 Installing Bushings And Boots

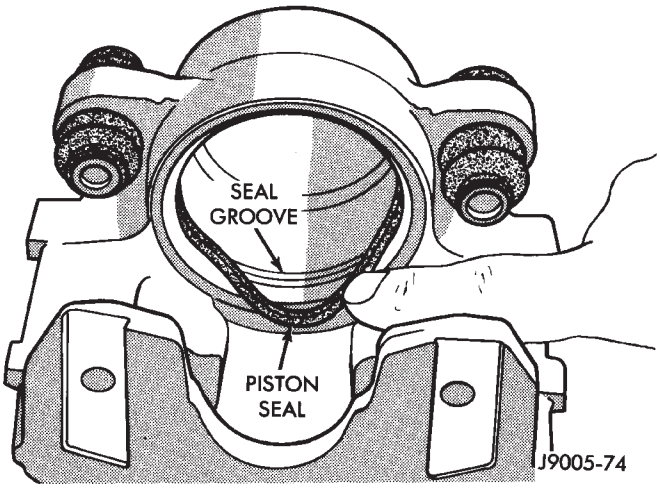

Fig. 21 Installing Piston Seal

(6) Start caliper piston in bore by hand (Fig. 23). Use a turn and push motion to work piston into seal. Once piston is started in seal, press piston **only part way** into bore.

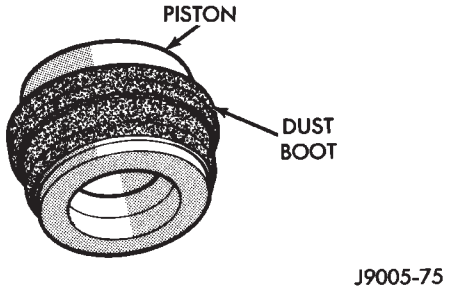

Fig. 22 Installing Dust Boot On Piston

(7) Press caliper piston to bottom of bore.

(8) Seat dust boot in caliper with Installer Tool C-4842 and Tool Handle C- 4171 (Fig. 24).

(9) Install caliper bleed screw if removed.

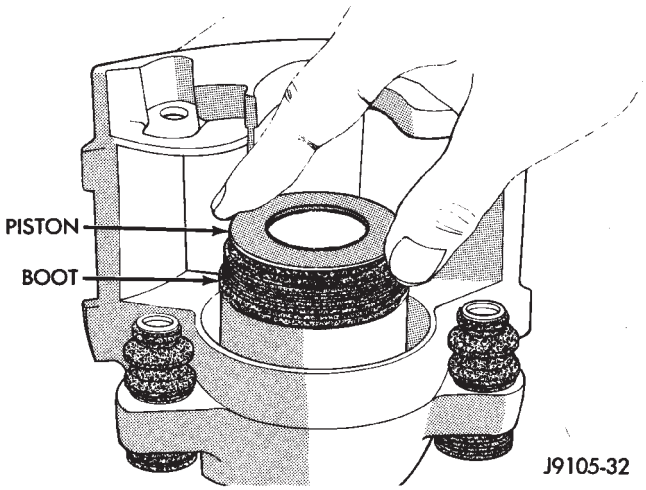

Fig. 23 Installing Caliper Piston

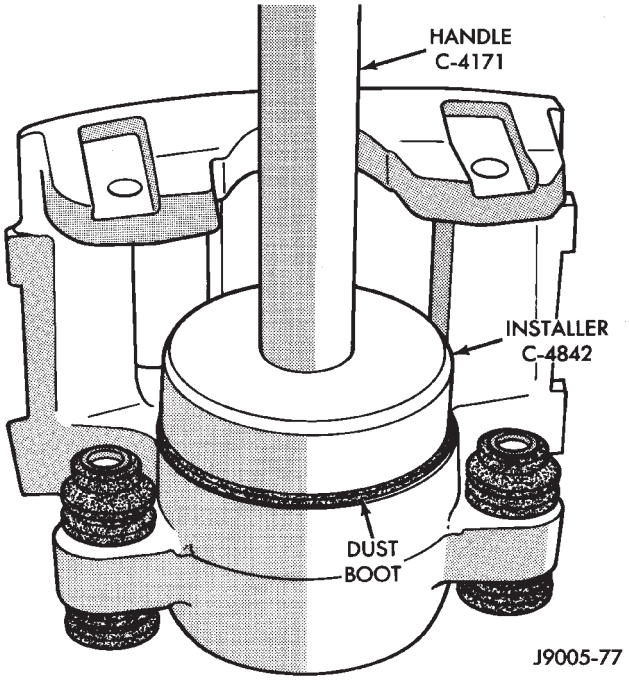

Fig. 24 Seating Caliper Piston Dust Boot

CALIPER INSTALLATION

(1) Install brakeshoes in caliper (Figs. 11, 12).

(2) Connect brake hose to caliper but do not tighten fitting bolt completely at this time. **Be sure to use new gaskets on fitting bolt to avoid leaks (Fig. 25).**

(3) Install caliper. Position mounting notches at lower end of brakeshoes on bottom mounting ledge (Fig. 13). Then rotate caliper over rotor and seat notches at upper end of shoes on mounting ledge (Fig. 13).

(4) Coat caliper mounting bolts with GE 661 or Dow 111 silicone grease. Then install and tighten bolts to 10-20 N·m (7-15 ft. lbs.) torque.

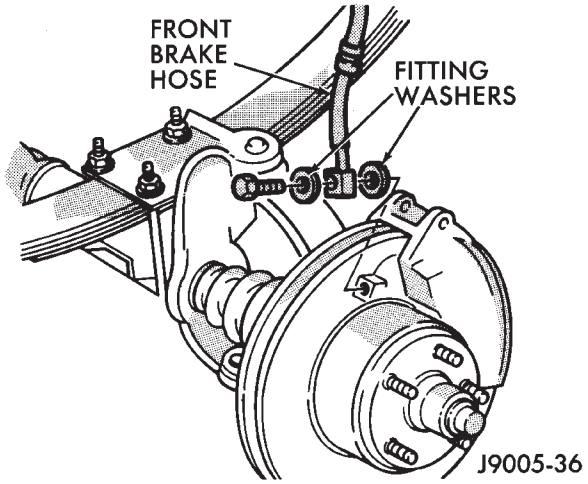

Fig. 25 Front Brake Hose And Fitting Components

CAUTION: If new caliper bolts are being installed, or if the original reason for repair was a drag/pull condition, check caliper bolt length before proceeding. If the bolts have a shank length greater than 67.6 mm (2.66 in.), they may contact the inboard brakeshoe causing a partial apply condition. Refer to Figure 14 for the required caliper bolt length.

(5) Position front brake hose clear of all chassis components and tighten caliper fitting bolt to 31 N·m (23 ft. lbs.) torque.

CAUTION: Be sure the brake hose is not twisted or kinked at any point. Also be sure the hose is clear of all steering and suspension components. Loosen and reposition the hose if necessary.

(6) Install wheels. Tighten wheel lug nuts to 109-150 N·m (80-110 ft. lbs.) torque.

(7) Fill and bleed brake system. Refer to procedures in Service Adjustments section.

ROTOR REMOVAL

(1) Raise vehicle and remove wheel.

(2) Remove caliper.

(3) Remove retainers securing rotor to hub studs (Fig. 26).

(4) Remove rotor from hub (Fig. 26).

(5) If rotor shield requires service, remove front hub and bearing assembly.

ROTOR INSTALLATION

(1) If new rotor is being installed, remove protective coating from rotor surfaces with Mopar carb cleaner. **It is not necessary to machine a rotor to remove the coating. Mopar carb cleaner followed by a rinse with brake cleaner will remove the coating.**

(2) Install rotor on hub.

(3) Install caliper.

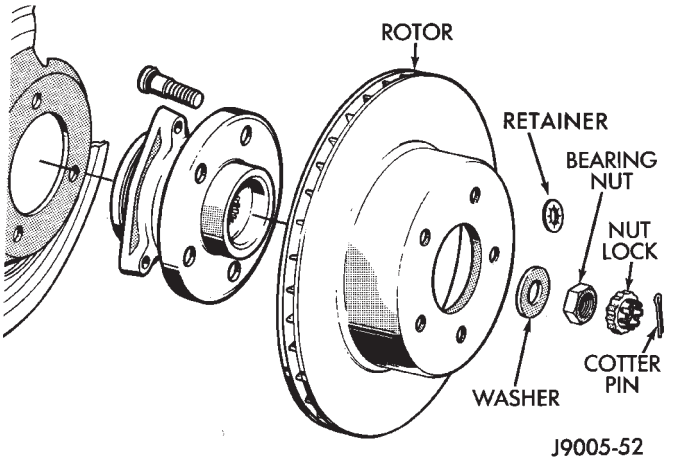

Fig. 26 Rotor And Hub

(4) Install new spring nuts on wheel studs.
(5) Install wheel and lower vehicle.

DISC BRAKE ROTOR THICKNESS

Rotor minimum usable thickness is 22.7 mm (0.89 in.). This dimension is either cast, or stamped on the rotor hub, or outer edge.

Measure rotor thickness at the center of the brakeshoe contact surface.

Replace the rotor if worn below minimum thickness. Also replace the rotor if refinishing would reduce thickness below the allowable minimum.

DISC BRAKE ROTOR RUNOUT

Check rotor lateral runout whenever pedal pulsation, or rapid, uneven brakelining wear has occurred.

On 4-wheel drive models, the rotor must be securely clamped to the hub to ensure an accurate runout measurement. Secure the rotor with the wheel nuts and 4 or 5 large diameter flat washers on each stud as shown (Fig. 27).

Use a dial indicator to check lateral runout (Fig. 27).

Maximum allowable rotor lateral runout is 0.13 mm (0.005 in.).

Check lateral runout with a dial indicator (Fig. 28). Excessive lateral runout will cause brake pedal pulsation and rapid, uneven wear of the brakeshoes.

Maximum allowable rotor runout for all models is 0.12 mm (0.005 in.).

DISC BRAKE ROTOR THICKNESS VARIATION

Variations in rotor thickness will cause pedal pulsation, noise and shudder.

Measure rotor thickness at four to six points around the rotor face. Position the micrometer approximately 2 cm (3/4 in.) from the rotor outer circumference for each measurement (Fig. 29).

Thickness should not **vary** by more than 0.013 mm (0.0005 in.) from point-to-point on the rotor. Refinish or replace the rotor if necessary.

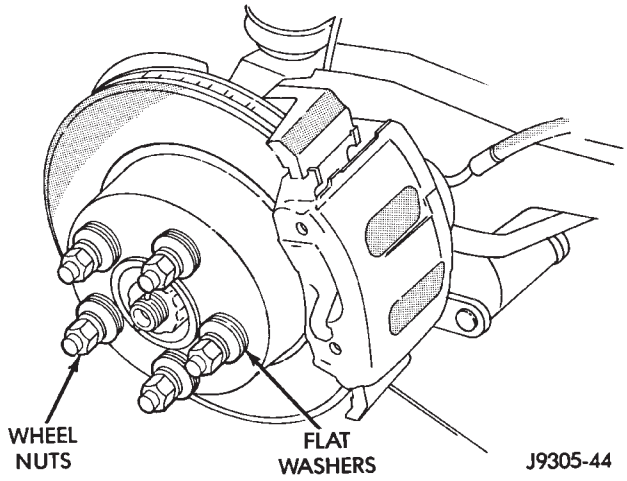

Fig. 27 Securing 4 x 4 Rotor For Lateral Runout Check

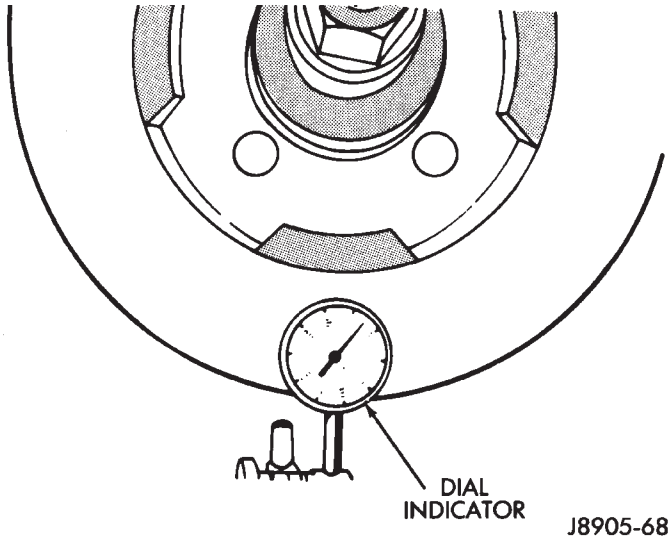

Fig. 28 Typical Method Of Checking Rotor Lateral Runout

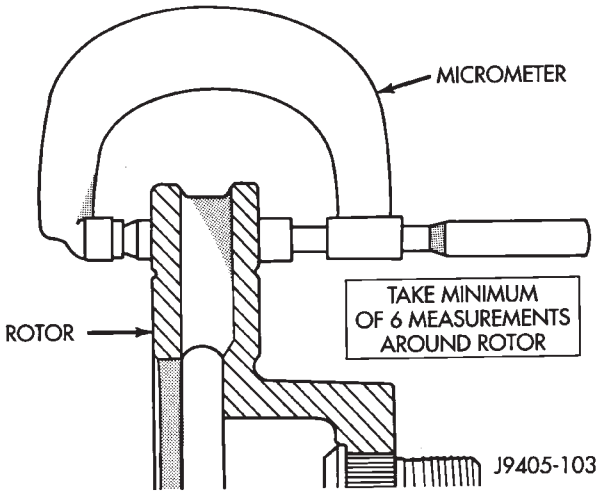

Fig. 29 Measuring Rotor Thickness Variation

DISC BRAKE ROTOR REFINISHING

When To Refinish

Rotor braking surfaces can be refinished by sanding and/or machining in a disc brake lathe. However, the rotor should be cleaned and inspected beforehand. Careful inspection will avoid refinishing rotors with very little service life left in them.

Pay particular attention to rotors that are heavily rusted, or corroded. Accumulated rust/corrosion on braking surfaces and ventilating ribs may extend to a depth beyond acceptable limits. This can be especially true on: (a) high mileage vehicles; (b) vehicles regularly exposed to road salt during winter months; (c) vehicles operated in coastal regions where salt air/road splash is a factor; (d) and vehicles used for extensive off-road operation.

New rotors have a protective coating that should be removed before installation. **It is not necessary to machine a rotor to remove this coating. The coating is easily removed with Mopar carb cleaner followed by a rinse with Mopar brake cleaner. A scotch brite pad, or steel wool can also be used to help loosen and remove the coating if desired.**

Recommended Refinishing Equipment

The brake lathe must be capable of machining both rotor surfaces simultaneously with dual cutter heads (Fig. 30). **Equipment capable of machining only one side at a time will produce a tapered rotor.** The lathe should also be equipped with a grinder attachment, or dual sanding discs for final cleanup or light refinishing.

Refinishing Techniques

If the rotor surfaces only need minor cleanup of rust, scale, or scoring, use abrasive sanding discs to clean up the rotor surfaces. However, when a rotor is scored or worn, machining with cutting tools will be required.

Light cuts are recommended when machining the rotor surfaces. Heavy feed rates are not recommended and may result in chatter marks, or taper.

CAUTION: Never refinish a rotor if machining would cause the rotor to fall below minimum allowable thickness.

The final finish on the rotor should be a non-directional, cross hatch pattern (Fig. 31). Use sanding discs to produce this finish.

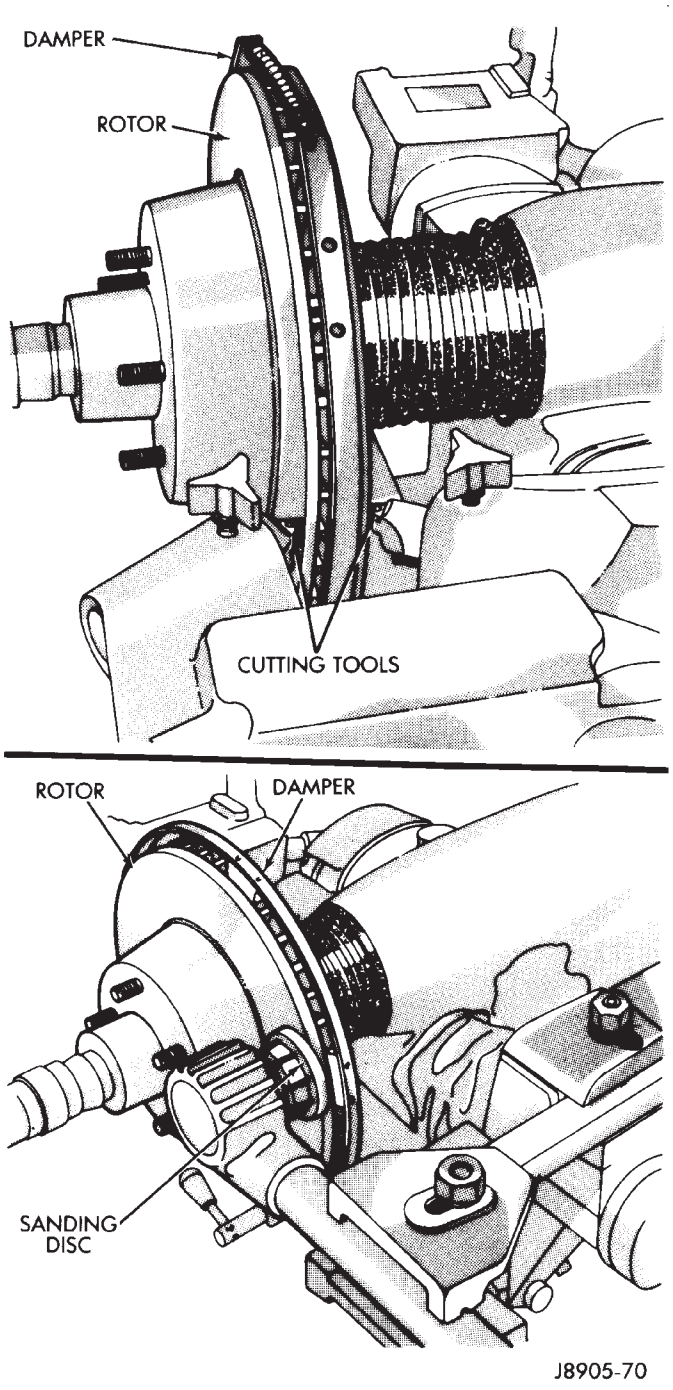

Fig. 30 Rotor Refinishing Equipment

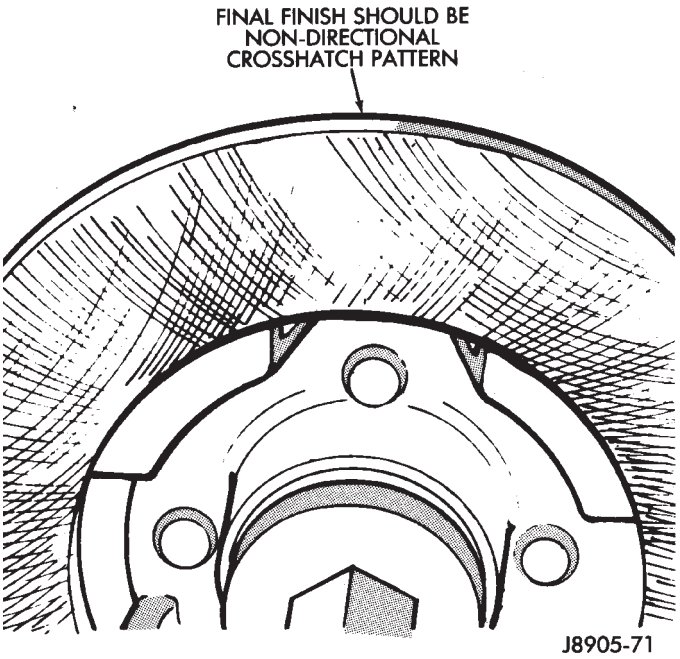

Fig. 31 Preferred Rotor Surface Finish

WHEEL NUT TIGHTENING

The wheel attaching nuts must be tightened properly to ensure efficient brake operation. Overtightening the nuts or tightening them in the wrong sequence can cause distortion of the brake rotors and drums. Impact wrenches are not really recommended for tightening wheel nuts. A torque wrench should be used for this purpose.

A light coat of LPS Anti-Corrosion spray lube around the hub face and on the studs will cut down on rust/corrosion formation.

The correct tightening sequence is important in avoiding rotor and drum distortion. The correct sequence is in a diagonal crossing pattern (Fig. 32).

Recommended torque range for XJ/YJ wheel nuts is 108-149 N·m (80-110 ft. lbs.). Preferred set-to torque is 129 N·m (95 ft. lbs.) torque.

Seat the wheel and install the wheel nuts finger tight. Tighten the nuts in the sequence to 1/2 the required torque. Then repeat the tightening sequence to final specified torque.

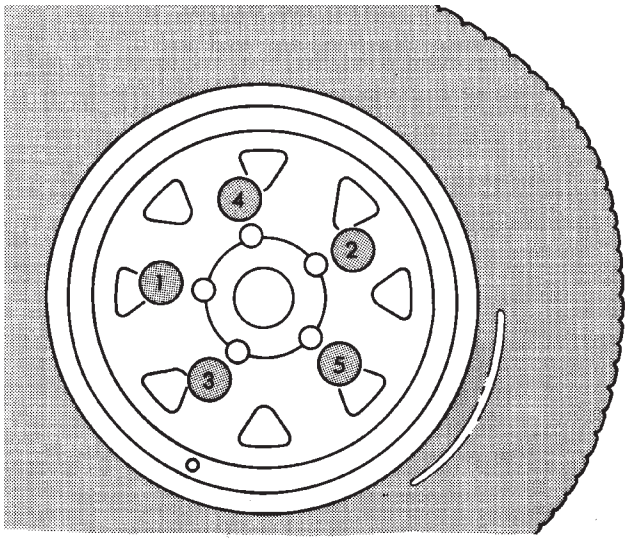

Fig. 32 Wheel Nut Tightening Sequence

DRUM BRAKES

INDEX

	page		page
Brake Drum Refinishing	58	Wheel Cylinder Installation	58
Drum Brake Adjustment	57	Wheel Cylinder Overhaul	57
Drum Brakeshoe Installation	55	Wheel Cylinder Removal	57
Drum Brakeshoe Removal	55	Wheel Nut Tightening	59
Support Plate Replacement	58		

DRUM BRAKESHOE REMOVAL (Figs. 1 and 2)

(1) Raise vehicle and remove rear wheels.

(2) Remove and discard spring nuts securing drums to wheel studs.

(3) Remove brake drums. If drums prove difficult to remove, retract brakeshoes. Remove access plug at the rear of backing plate and back off adjuster screw with brake tool and screwdriver.

(4) Remove U-clip and washer securing adjuster cable to parking brake lever.

(5) Remove primary and secondary return springs from anchor pin with Brake Spring Plier Tool 8078.

(6) Remove holddown springs, retainers and pins with standard retaining spring tool.

(7) Install spring clamps on wheel cylinders to hold pistons in place.

(8) Remove adjuster lever, adjuster screw and spring.

(9) Remove adjuster cable and cable guide.

(10) Remove brakeshoes and parking brake strut.

(11) Disconnect cable from parking brake lever and remove lever.

DRUM BRAKESHOE INSTALLATION

(1) Clean support plate with Mopar brake cleaner. Replace support plate if worn, or rusted through at any point. Do not attempt to salvage, or reuse a damaged support plate.

(2) If new drums are being installed, remove protective coating with Mopar Carb cleaner followed by final rinse with Mopar brake cleaner. A scotch brite pad, or steel wool can also be used to help loosen and remove coating if desired. **It is not necessary to machine drums to remove the coating.**

(3) Clean and lubricate anchor pin with light coat of Mopar multi-mileage grease.

(4) Apply Mopar multi-mileage grease to brakeshoe contact surfaces of support plate (Figs. 3 and 4).

(5) Lubricate adjuster screw threads and pivot with Mopar spray lube.

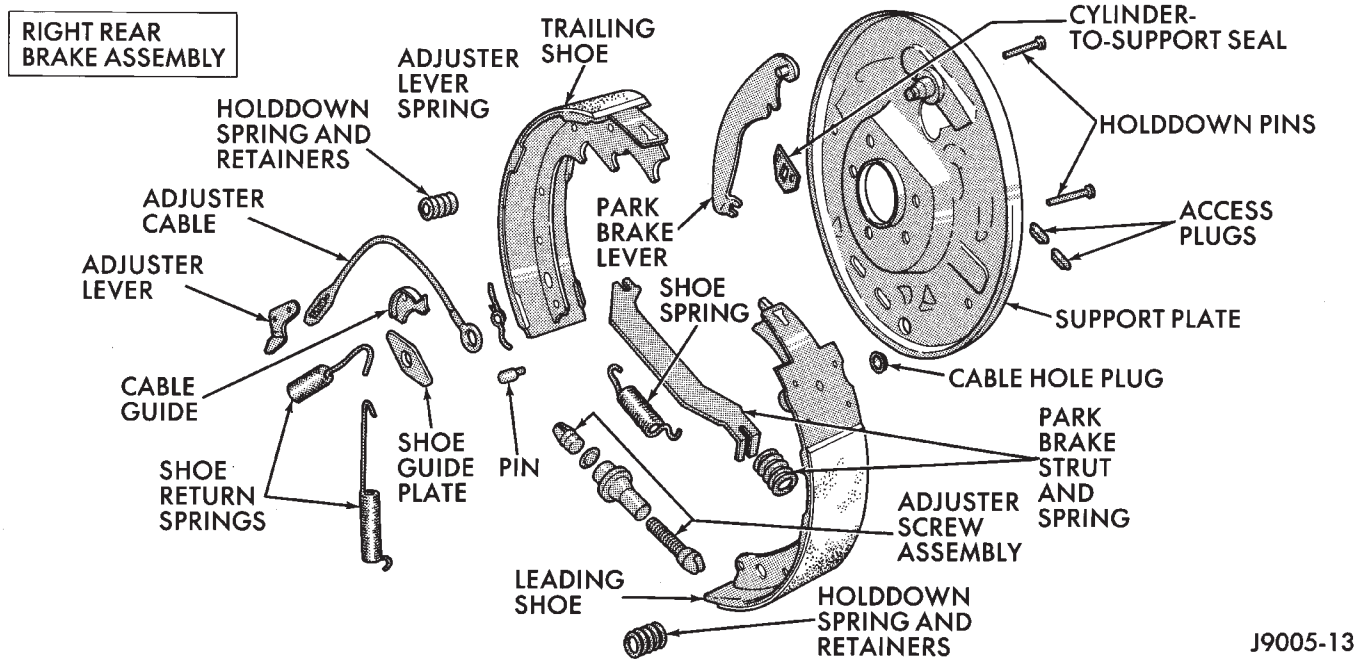

Fig. 1 Nine Inch Drum Brake Components

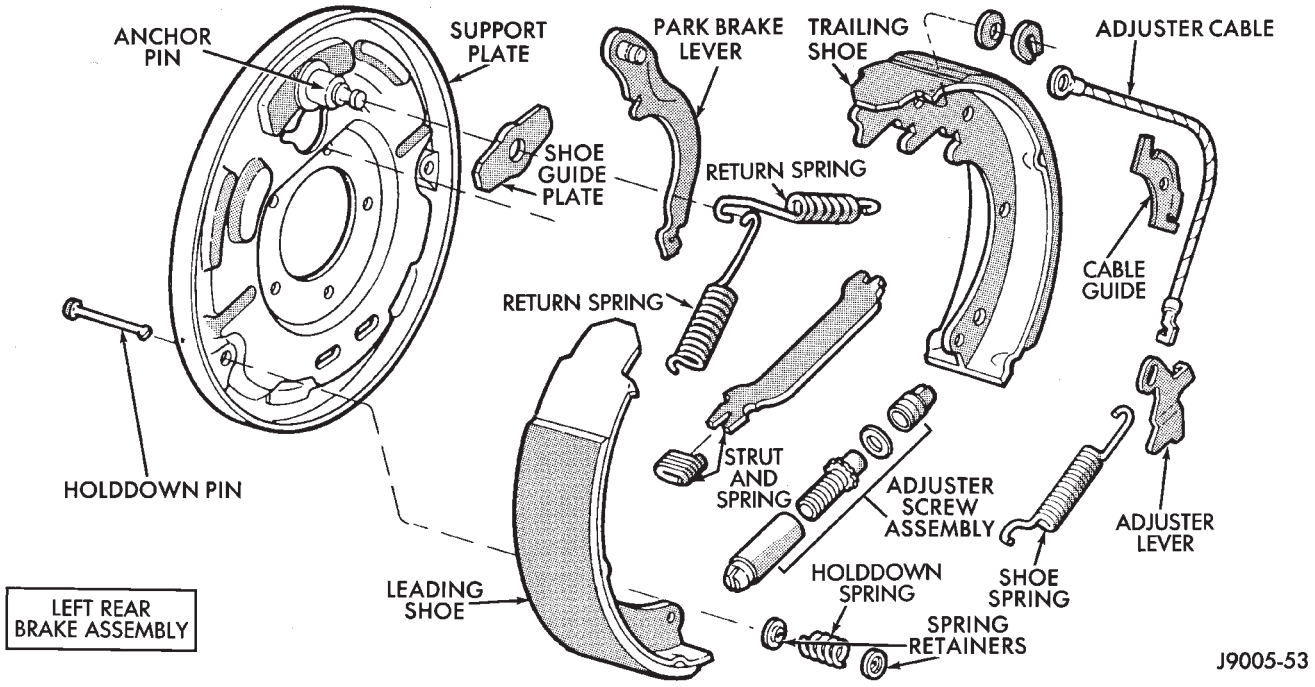

Fig. 2 Ten Inch Drum Brake Components

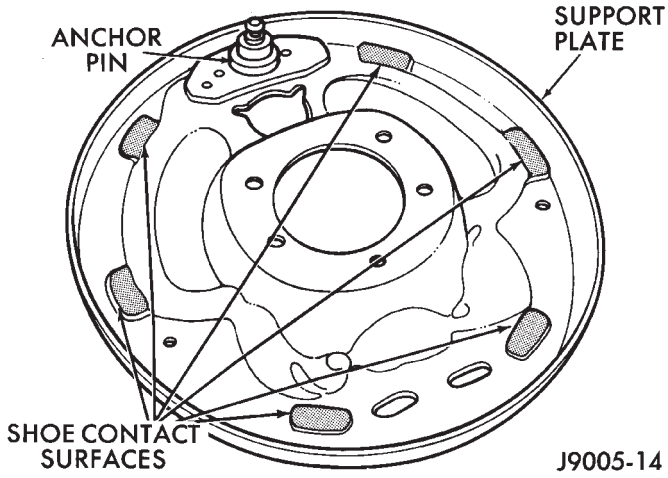

Fig. 3 Shoe Contact Surfaces (9-Inch Support Plate)

(6) Attach parking brake lever to secondary brakeshoe. Use new washer and U-clip to secure lever.

(7) Remove wheel cylinder clamps.

(8) Attach parking brake cable to lever.

(9) Install brakeshoes on support plate. Secure shoes with new holddown springs, pins and retainers.

(10) Install parking brake strut and spring.

(11) Install guide plate and adjuster cable on anchor pin.

(12) Install primary and secondary return springs.

(13) Install adjuster cable guide on secondary shoe.

(14) Lubricate and assemble adjuster screw (Fig. 5).

(15) Install adjuster screw, spring and lever and connect to adjuster cable.

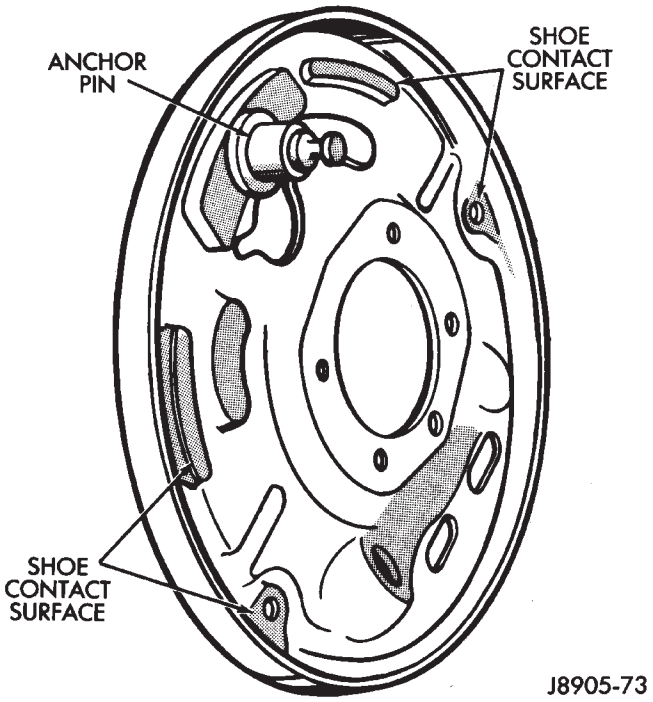

Fig. 4 Shoe Contact Surfaces (10-Inch Support Plate)

(16) Adjust shoes to drum as described in following procedure.

(17) Install wheel/tire assemblies and lower vehicle.

(18) Verify firm brake pedal before moving vehicle.

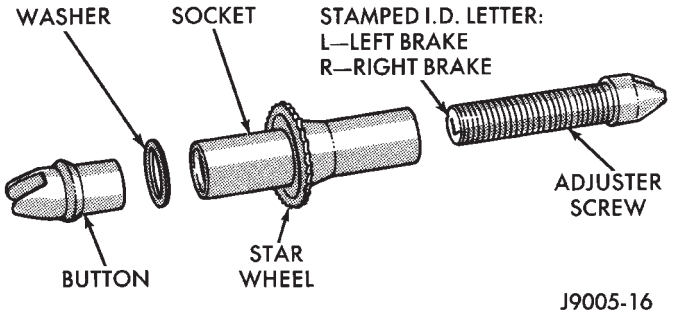

Fig. 5 Adjuster Screw Components (9-Inch Brake)

DRUM BRAKE ADJUSTMENT

Rear drum brakes are equipped with a self adjusting mechanism. Under normal circumstances, the only time adjustment is required is when the shoes are replaced, removed for access to other parts, or when one or both drums are replaced.

The only tool needed for adjustment is a standard brake gauge.

Adjustment is performed with the brakeshoes installed on the support plate. Procedure is as follows:

ADJUSTMENT PROCEDURE

(1) Raise and support vehicle rear end and remove wheels and brake drums.

(2) Verify that left/right automatic adjuster lever and cable are properly connected.

(3) Insert brake gauge in drum. Expand gauge until gauge inner legs contact drum braking surface. Then lock gauge in position (Fig. 6).

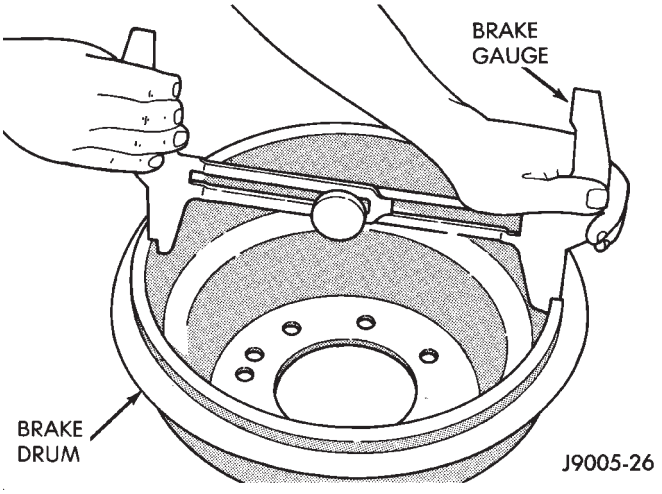

Fig. 6 Adjusting Gauge To Brake Drum

(4) Reverse gauge and install it on brakeshoes (Fig. 6). Position gauge legs at shoe centers as shown. If gauge does not fit (too loose or tight), adjust shoes.

(5) Pull shoe adjuster star wheel away from adjuster lever.

(6) Turn adjuster star wheel (by hand) to expand or retract brakeshoes. Continue adjustment until gauge outside legs are light drag-fit on shoes (Fig. 7).

(7) Repeat adjustment at opposite brakeshoe assembly.

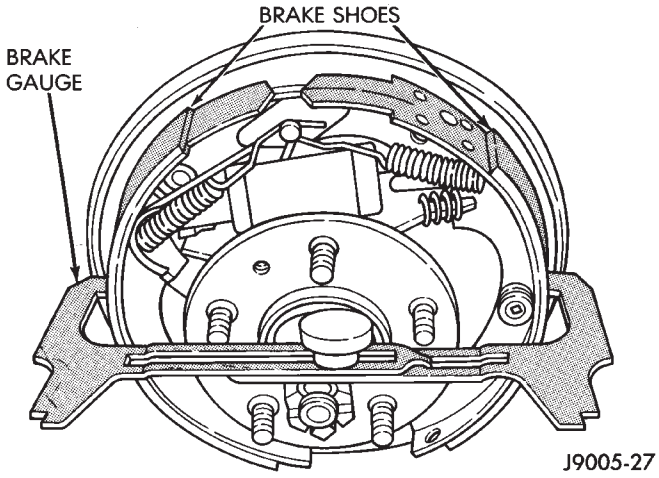

Fig. 7 Adjusting Brakeshoes To Gauge

(8) Install brake drums and wheels and lower vehicle.

(9) Make final adjustment as follows:

(a) Drive vehicle and make one forward stop followed by one reverse stop.

(b) Repeat procedure 8-10 times to actuate self adjuster components and equalize adjustment.

(c) **Bring vehicle to complete standstill at each stop. Incomplete, rolling stops will NOT activate adjuster mechanism.**

WHEEL CYLINDER REMOVAL

(1) Raise vehicle and remove wheel.

(2) Disconnect brakeline at wheel cylinder. **If cylinder brakeline fitting is hard to break loose, spray generous amount of Mopar Rust Penetrant between fitting and line and around fitting threads in wheel cylinder. Note that it may require a few minutes for penetrant to work.**

(3) Remove brakeshoes.

(4) Remove bolts attaching wheel cylinder to support plate and remove cylinder.

WHEEL CYLINDER OVERHAUL (Figs. 8 and 9)

(1) Remove links.

(2) Remove dust boots.

(3) Remove cups and pistons. Discard cups.

(4) Remove and discard spring and expander.

(5) Remove bleed screw.

(6) Clean cylinder, pistons and links with Mopar brake cleaner.

(7) Inspect cylinder bore and pistons. Light discoloration of bore is acceptable. However, replace cylinder if bore and pistons are scored, pitted, or corroded.

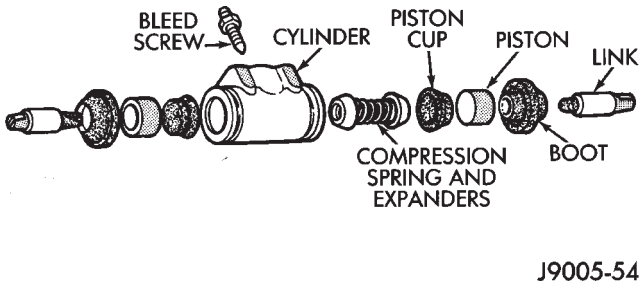

Fig. 8 Wheel Cylinder (9-Inch Brake)

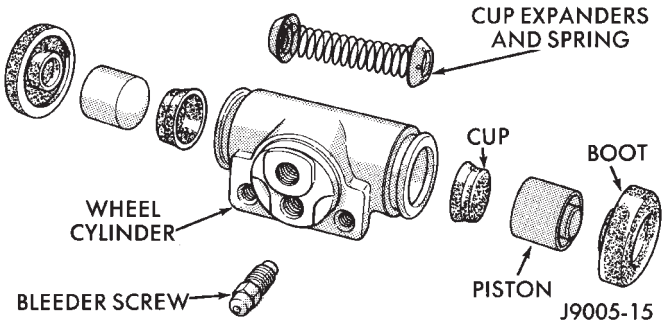

Fig. 9 Wheel Cylinder (10-Inch Brake)

Do not hone cylinder bores or polish pistons. Replace cylinder as an assembly if bore is damaged.

(8) Install bleed screw.

(9) Coat cylinder bore, pistons, cups and expander with brake fluid and reassemble cylinder components. Be sure piston cup lips face expander.

WHEEL CYLINDER INSTALLATION

(1) Apply small bead of silicone sealer around cylinder mounting surface of support plate.

(2) Start brakeline in wheel cylinder fitting by hand.

(3) Align and seat wheel cylinder on support plate (Fig. 10).

(4) Install cylinder mounting bolts (Fig. 10). Tighten bolts to 10 N·m (90 in. lbs.) torque.

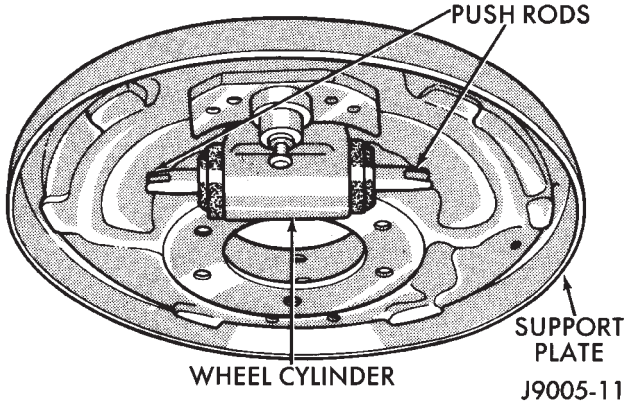

Fig. 10 Wheel Cylinder Mounting

(5) Tighten brakeline fitting to 15 N·m (132 in. lbs.) torque.

(6) Install brakeshoes. Adjust shoes to drum with brake gauge.

(7) Install brake drums and lower vehicle.

(8) Fill master cylinder and bleed brakes.

SUPPORT PLATE REPLACEMENT

The support plate should cleaned and inspected whenever the drum brake components are being serviced.

Check the support plate for wear, or rust through at the contact pads and replace the plate if necessary. Be sure to lubricate the contact pads with Mopar multi-mileage grease before shoe installation. Lubrication will avoid noisy operation and shoe bind.

(1) Raise vehicle and remove wheel/tire assembly.

(2) Remove brake drum, brakeshoes, and wheel cylinder.

(3) Remove axle shaft as described in Group 3.

(4) Remove support plate attaching nuts and remove support plate.

(5) Clean axle tube flange. If gasket is not used on flange, apply thin bead of silicone adhesive/sealer to flange.

(6) Position new support plate on axle tube flange.

(7) Apply Mopar Lock N″ Seal, or Loctite 242 to support plate attaching nuts. Then install and tighten nuts.

(8) Apply light coat of Mopar multi-mileage grease to contact pads of new support plate.

(9) Install wheel cylinder and brakeshoes.

(10) Adjust brakeshoes to drums. Refer to procedure in this section.

(11) Bleed brakes.

(12) Install wheel and tire assembly.

(13) Adjust parking brake cable tensioner. Refer to procedure in Parking Brake section.

(14) Lower vehicle and verify proper service brake and parking brake operation.

BRAKE DRUM REFINISHING

Brake drums can be machined to restore the braking surface. Use a brake lathe to clean up light scoring and wear.

CAUTION: Never refinish a brake drum if machining will cause the drum to exceed maximum allowable brake surface diameter.

Brake drums that are warped, distorted, or severely tapered should be replaced. Do not refinish drums exhibiting these conditions. Brake drums that are heat checked or have hard spots should also be replaced.

If the brake drums are heavily coated with rust, clean and inspect them carefully. Rust damage on high mileage drums can be severe enough to require replacement.

New drums have a protective coating that should be removed before installation. **It is not necessary to machine a drum to remove this coating. The coating is easily removed with Mopar carb cleaner followed by a rinse with Mopar brake cleaner. A scotch brite pad, or steel wool can also be used to help loosen and remove the coating if desired.**

The maximum allowable diameter for the drum braking surface is usually indicated on the drum outer face (Fig. 11).

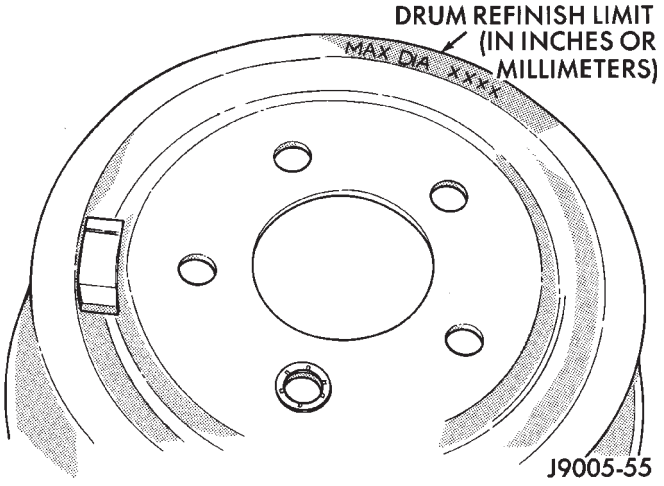

Fig. 11 Typical Location Of Brake Drum Refinish Limit

WHEEL NUT TIGHTENING

The wheel attaching lug nuts must be tightened properly to ensure efficient brake operation. Over-tightening the nuts or tightening them in the wrong sequence can cause distortion of the brake rotors and drums.

Impact wrenches are not recommended for tightening wheel nuts. A torque wrench should be used for this purpose.

A light coat of LPS Anti-Corrosion spray lube around the hub face and on the studs will cut down on rust/corrosion formation.

The correct tightening sequence is important in avoiding rotor and drum distortion. The correct sequence is in a diagonal crossing pattern (Fig. 12).

Recommended torque range for XJ/YJ wheel nuts is 109-150 N·m (80-110 ft. lbs.).

Seat the wheel and install the wheel nuts finger tight. Tighten the nuts in the sequence to half the required torque. Then repeat the tightening sequence to final specified torque.

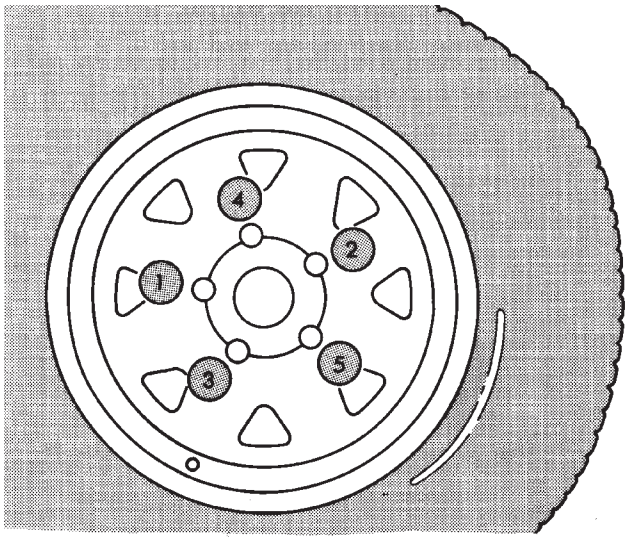

Fig. 12 Wheel Nut Tightening Sequence

PARKING BRAKES

INDEX

	page		page
General Service Information	60	Parking Brake Lever Removal (XJ with Full Console)	63
Parking Brake Cable Tensioner Adjustment (XJ/YJ)	68	Parking Brake Lever Removal (XJ with Mini Console)	62
Parking Brake Cable Tensioner Replacement (XJ)	65	Parking Brake Lever Removal (XJ Without Console)	64
Parking Brake Front Cable Replacement (YJ)	67	Parking Brake Operation	60
Parking Brake Lever Installation (XJ with Full Console)	64	Parking Brake Pedal Installation (YJ)	66
Parking Brake Lever Installation (XJ with Mini Console)	63	Parking Brake Pedal Removal (YJ)	66
Parking Brake Lever Installation (XJ Without Console)	65	Parking Brake Rear Cable Replacement (XJ)	66
		Parking Brake Rear Cable Replacement (YJ)	68
		Parking Brake Switch	68

GENERAL SERVICE INFORMATION

Parking brake adjustment is controlled by a cable tensioner mechanism.

The cable tensioner, once adjusted at the factory, should not need further adjustment under normal circumstances. There are only two instances when adjustment is required. The first is when a new tensioner, or cables have been installed. And the second, is when the tensioner and cables are disconnected for access to other brake components.

PARKING BRAKE OPERATION

The rear brakes are utilized for the parking brake function. They are actuated hydraulically during normal brake operation but are mechanically actuated for parking brake operation.

Parking Brake Components

The rear brakeshoes are applied by a system of levers and cables for parking brake operation. A foot or hand operated lever in the passenger compartment is the main application device. Actuating levers on the

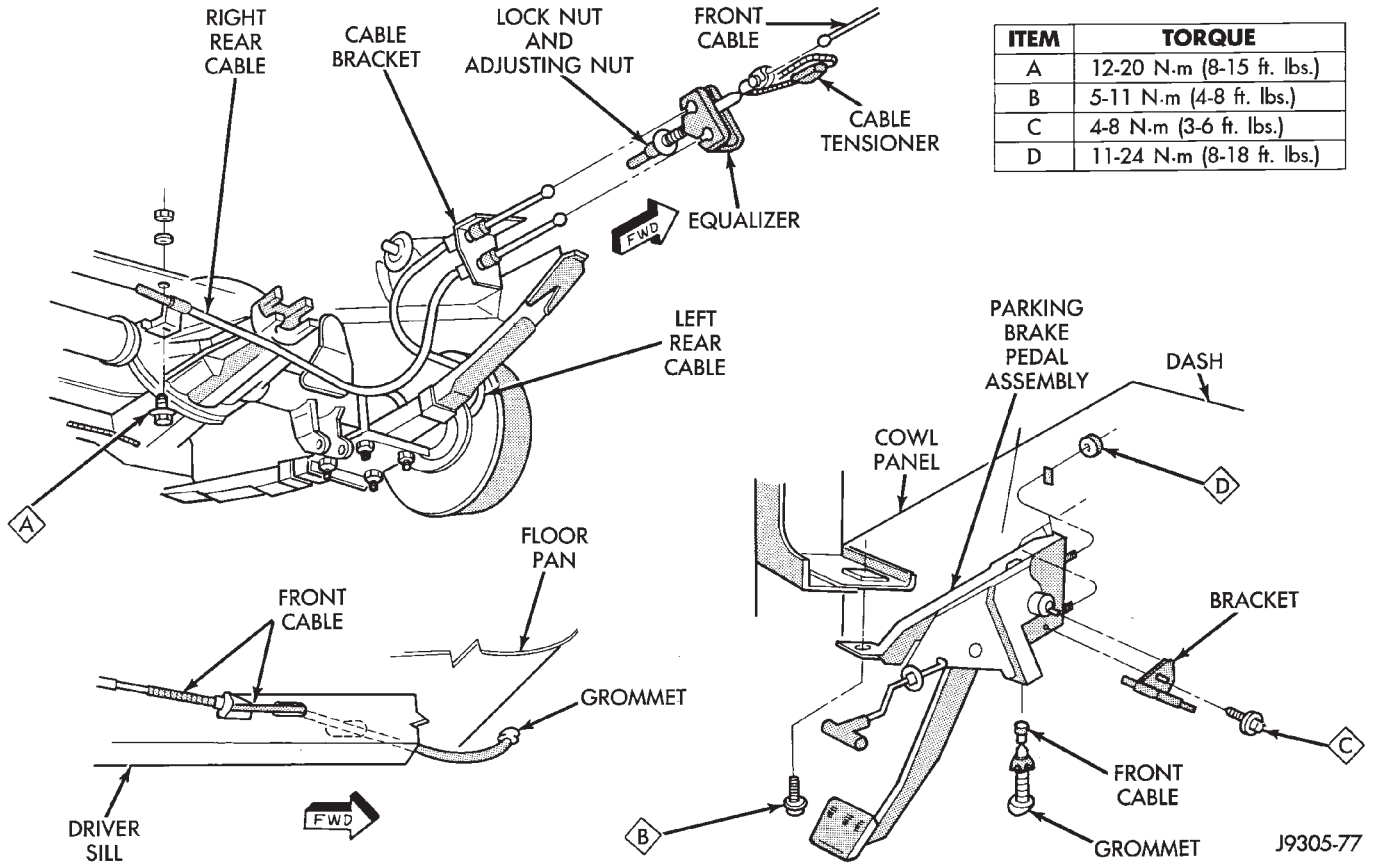

ITEM	TORQUE
A	12-20 N·m (8-15 ft. lbs.)
B	5-11 N·m (4-8 ft. lbs.)
C	4-8 N·m (3-6 ft. lbs.)
D	11-24 N·m (8-18 ft. lbs.)

Fig. 1 Parking Brake Components (YJ)

secondary brakeshoes move the shoes directly into contact with the drum braking surface. The actuating levers are interconnected by a system of cables and a tensioner mechanism. The tensioner mechanism controls parking brake adjustment.

A parking brake switch is used on all models. It is mounted on the parking brake lever or foot pedal and is actuated by movement of the lever/pedal. The switch, which is in circuit with the red warning light in the dash, will illuminate the warning light whenever the parking brakes are applied.

On XJ models, the cable tensioner is part of the lever assembly. On YJ models, the tensioner and equalizer are mounted in a bracket attached to the underbody.

On YJ models, the parking brake front cable is attached to the foot pedal and cable tensioner. The tensioner and rear cables are connected to the equalizer (Fig. 1).

On XJ models, the cable tensioner is connected directly to the hand lever (a front cable is not used). The tensioner rod is attached to the equalizer which is the connecting point for the rear cables (Fig. 2).

The rear cables are connected to the actuating lever on each secondary brakeshoe. The levers are attached to the brakeshoes by a pin either pressed into, or welded to the lever. A clip is used to secure the pin in the brakeshoe. The pin allows each lever to pivot independently of the brakeshoe.

Struts installed between each brakeshoe, are used to maintain shoe alignment and equal motion when the parking brakes are applied. Each strut is equipped with a combination tension and anti-rattle spring.

Parking Brake Application

To apply the parking brakes, the foot pedal is pressed downward, or the hand lever is pulled upward, to an engaged position. This pulls the rear brakeshoe actuating levers forward, by means of the interconnected tensioner and cables.

As the actuating lever is pulled forward, the parking brake strut (which is connected to both shoes), exerts a linear force against the primary brakeshoe. This action presses the primary shoe into contact with the drum.

Once the primary shoe contacts the drum, force exerted through the strut does not stop. Instead, further lever movement exerts continuing force against the strut. This force is transferred through the strut to the secondary brakeshoe causing it to pivot into the drum as well.

The brakeshoes remain engaged with the drum until the levers and cables are released. A gear type ratcheting mechanism is used to hold the pedal or lever in an applied position. Parking brake release is accomplished by means of the release handle on YJ models. Or by the hand lever release button on XJ models.

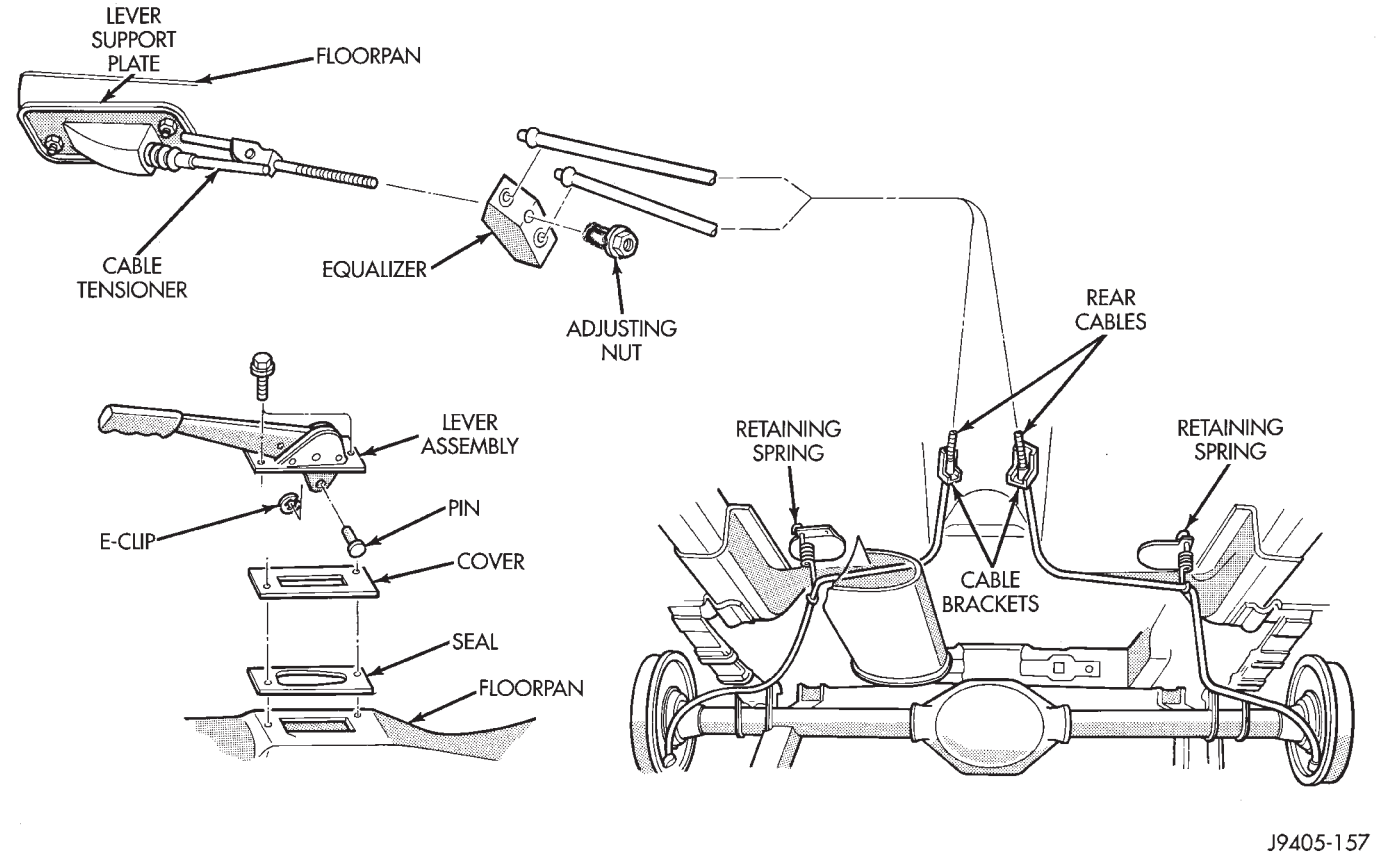

Fig. 2 Parking Brake Components (XJ)

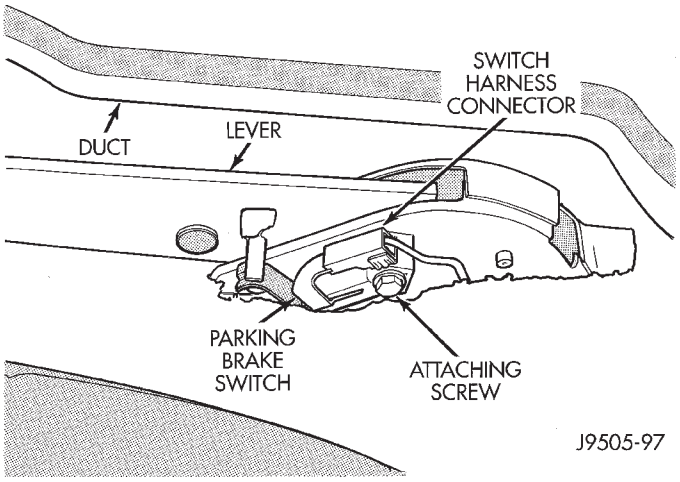

Fig. 3 Parking Brake Switch Mounting

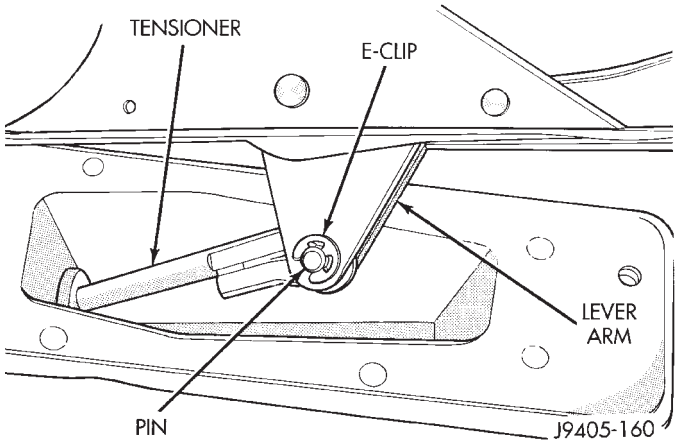

Fig. 4 Tensioner E-Clip And Retaining Pin Location

PARKING BRAKE LEVER REMOVAL (XJ WITH MINI CONSOLE)

(1) Release parking brakes, if necessary.

(2) Raise vehicle.

(3) Remove adjusting nut from tensioner rod (Fig. 2). Then secure equalizer and rear cables to chassis with wire.

(4) Remove nuts attaching lever support plate to underside of floorpan. Then move plate aside.

(5) Lower vehicle.

(6) Disconnect parking brake switch wire at switch (Fig. 3).

(7) Remove parking brake lever assembly from floorpan.

(8) Remove tensioner cover and boot for access to lever arm (Fig. 4).

(9) Remove E-clip and pin that connect tensioner to lever arm (Fig. 4).

(10) Remove lever attaching screws from floorpan (Fig. 5).

(11) Remove lever assembly.

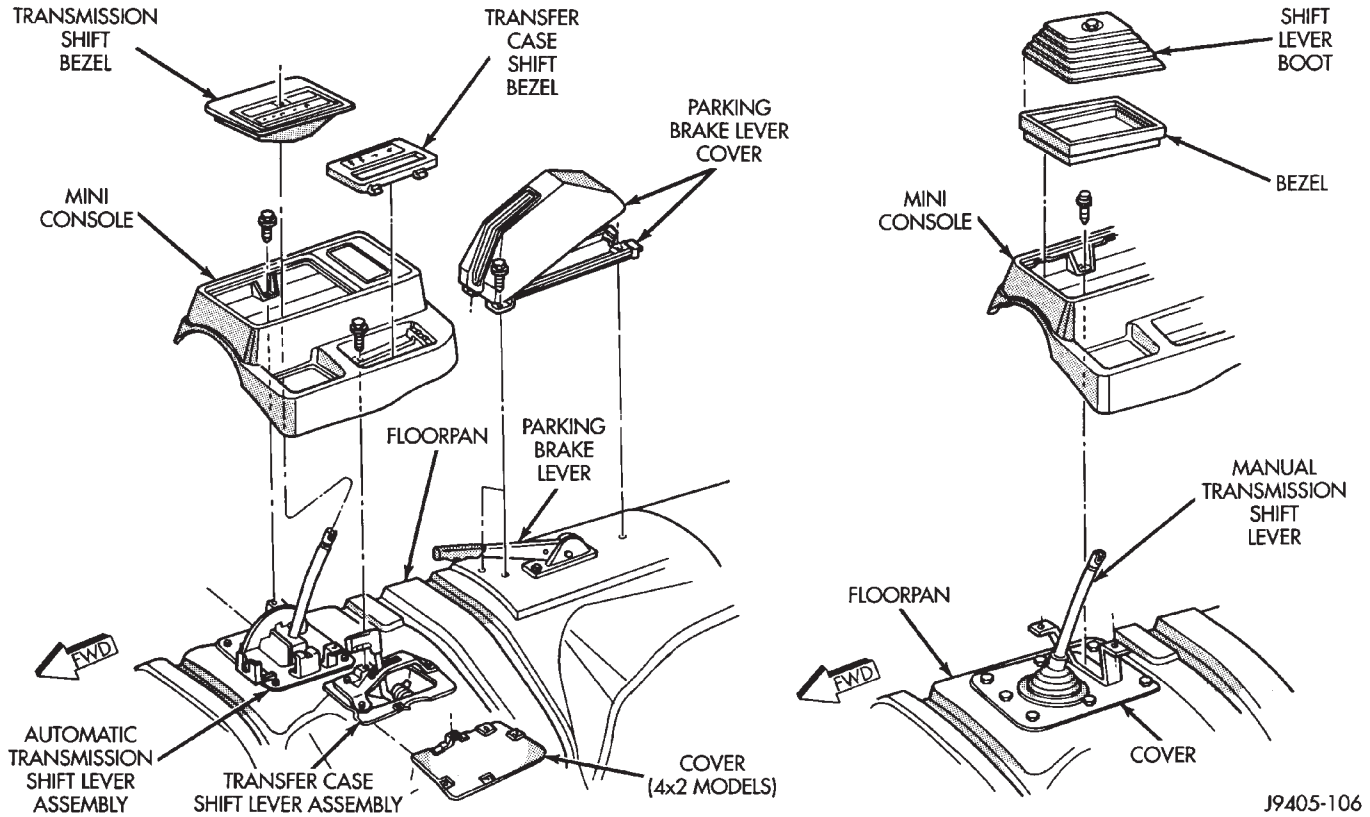

Fig. 5 Mini Console And Parking Brake Lever Cover (XJ)

(12) Parking brake switch can be serviced at this time, if necessary.

PARKING BRAKE LEVER INSTALLATION (XJ WITH MINI CONSOLE)

(1) Assemble lever and tensioner components (Figs. 4 and 5). Be sure E-clip is fully seated in pin (Fig. 4).

(2) Verify that tensioner boot is properly seated in cover (Fig. 6).

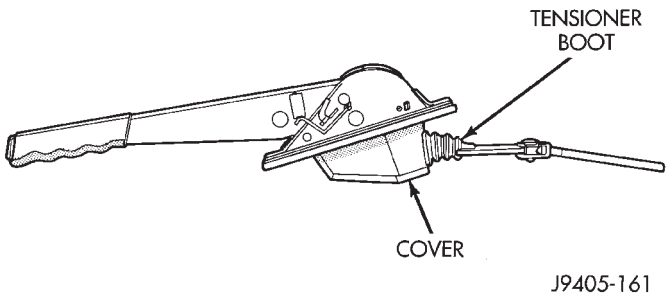

Fig. 6 Tensioner Boot Seated In Cover

(3) Position lever assembly on floorpan and install lever attaching screws/nuts. Also install parking brake switch if removed, or replaced.

(4) Raise vehicle.

(5) Insert cable tensioner rod in equalizer and install adjusting nut on tensioner rod (Fig. 7).

(6) Install and tighten nuts that attach lever support plate to floorpan and lever screws.

(7) Adjust parking brakes. Refer to procedure in this section.

(8) Lower vehicle.

(9) Connect parking brake switch wire.

(10) Install lever trim cover, if equipped.

(11) Verify correct parking brake operation.

PARKING BRAKE LEVER REMOVAL (XJ WITH FULL CONSOLE)

(1) Release parking brakes.

(2) Raise vehicle.

(3) Remove adjusting nut from tensioner rod. Then temporarily secure equalizer to nearby chassis component with wire.

(4) Remove nuts attaching lever support plate to underside of floorpan.

(5) Lower vehicle.

(6) On models with manual transmission, remove shift knob, outer boot, and bezel.

(7) On models with automatic transmission, remove shift handle cap and remove plunger, spring and T-lock (Fig. 8).

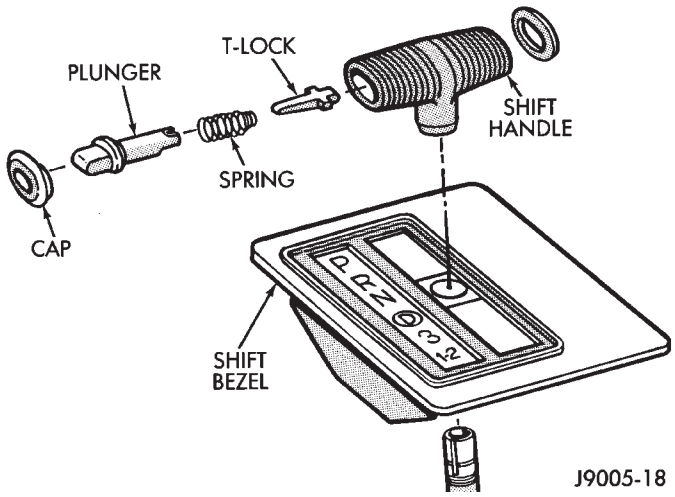

Fig. 8 Automatic Transmission Shift Handle And Bezel

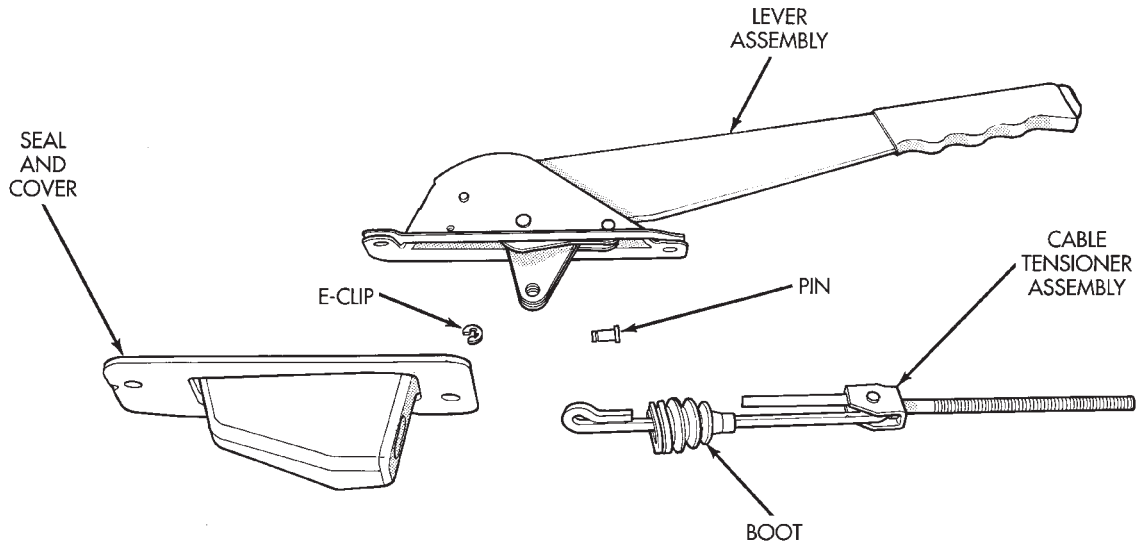

Fig. 7 Hand Lever And Cable Tensioner Components (XJ)

(8) Remove shift handle by pulling upward sharply on handle. Then remove shift bezel (Fig. 7).

(9) Remove console cover screws (Figs. 9 and 10).

(10) On models with power mirror switch, pry switch out of console cover and disconnect switch connector (Fig. 9).

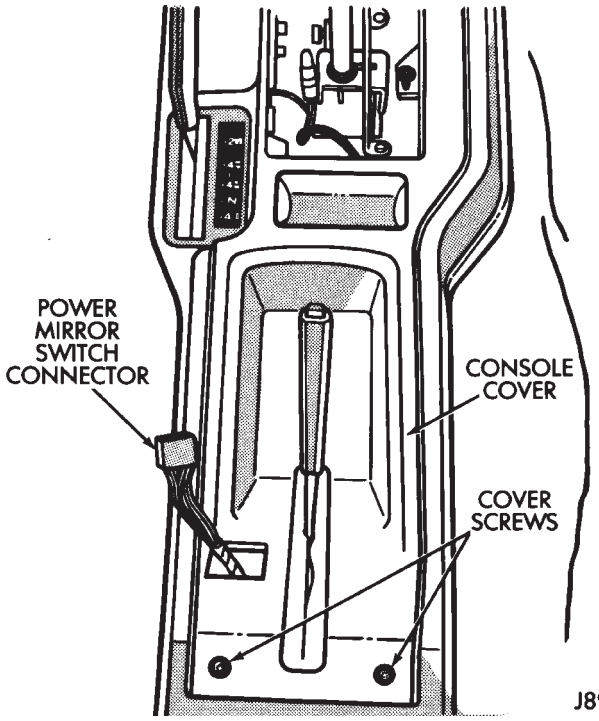

Fig. 9 Console Cover Screws And Power Mirror Switch Connector

(11) Remove cover from console (Fig. 10).

(12) Remove screws attaching console to brackets and shifter covers (Fig. 11).

(13) Remove console (Fig. 11).

(14) Remove duct (Fig. 11).

(15) Disconnect wire at parking brake switch on lever (Fig. 4).

(16) Remove lever and cable tensioner assembly from floorpan.

(17) Move cover and boot aside for access to lever arm (Fig. 4).

(18) Remove E-clip and pin that connect tensioner to lever arm (Fig. 4).

(19) Parking brake switch can be replaced at this time if necessary.

PARKING BRAKE LEVER INSTALLATION (XJ WITH FULL CONSOLE)

(1) Assemble lever and tensioner (Figs. 4 and 5). Be sure E-clip is fully engaged in retaining pin (Fig. 4).

(2) Verify that tensioner boot is fully seated in cover (Fig. 6).

(3) Position assembled lever and tensioner in floorpan.

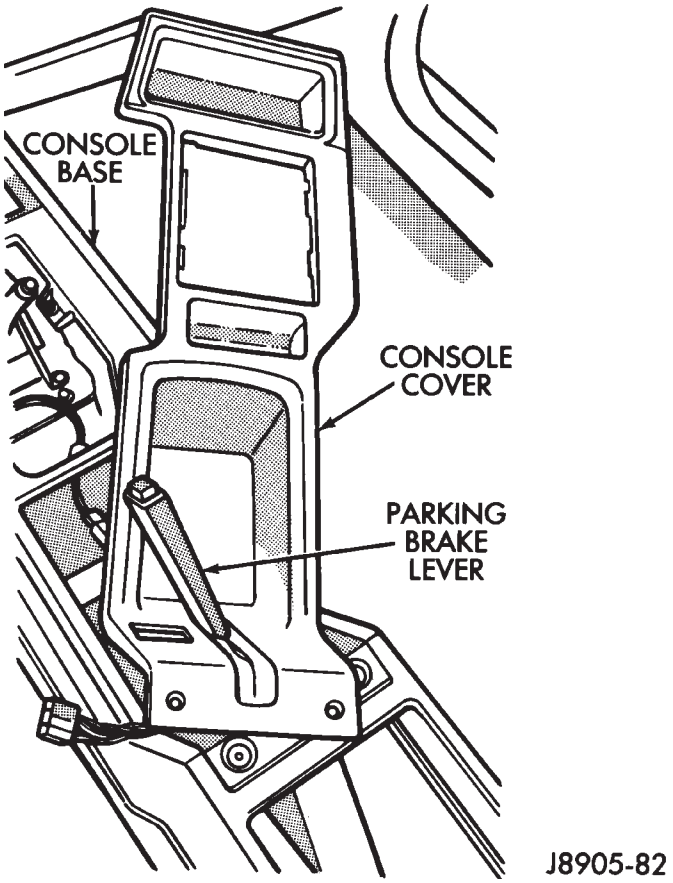

Fig. 10 Console Cover And Base

(4) Install parking brake switch on lever if removed, and connect brake warning light wires to switch.

(5) Install duct and console (Fig. 11).

(6) Connect power mirror switch wire to switch and install switch in console cover.

(7) Install console cover.

(8) On automatic transmission models, install shift bezel and shift handle.

(9) On manual transmission models, install bezel, outer boot, and shift knob.

(10) Raise vehicle.

(11) Insert tensioner rod in equalizer and install adjusting nut on tensioner rod.

(12) Install nuts attaching lever support plate to floorpan and lever.

(13) Adjust parking brakes. Refer to procedure in this section.

(14) Lower vehicle and verify proper parking brake operation.

PARKING BRAKE LEVER REMOVAL (XJ WITHOUT CONSOLE)

(1) Raise vehicle.

(2) Remove nuts attaching lever support plate to underside of floorpan.

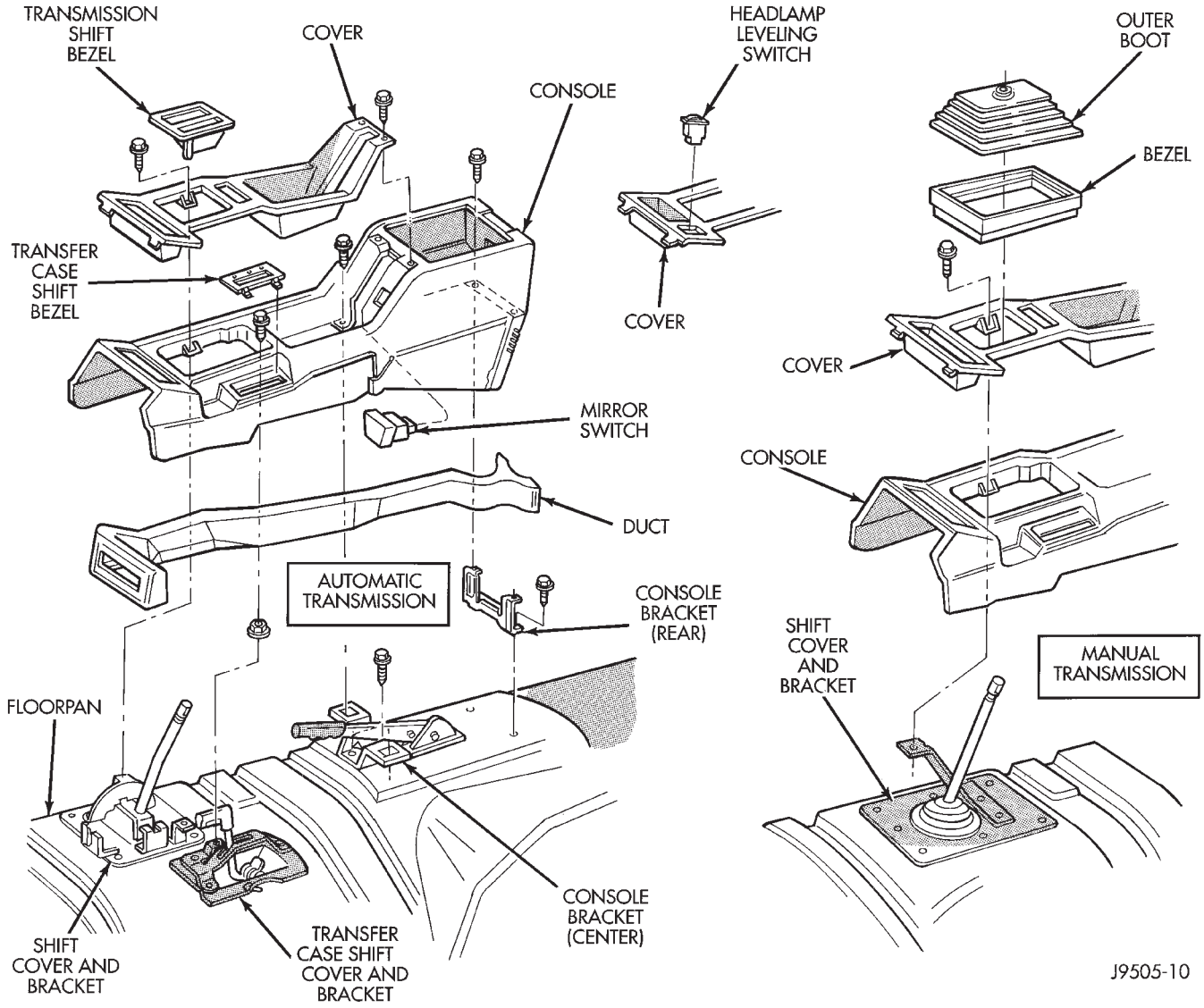

Fig. 11 Full Console Components (XJ)

(3) Remove adjusting nut from tensioner rod. Then temporarily secure equalizer and cables to nearby chassis component with wire.

(4) Lower vehicle.

(5) Raise lever cover at rear and tilt it forward (Fig. 12).

(6) Remove cover attaching screws. Or, if cover is attached with rivets, drill out and remove cover.

(7) Disconnect parking brake warning light wire at switch on lever. Remove switch if replacement is necessary.

(8) Remove lever and tensioner assembly from floorpan.

(9) Move cover and boot aside for access to tensioner retaining pin and clip.

(10) Remove pin and E-clip that secure tensioner to lever arm and separate lever and tensioner.

PARKING BRAKE LEVER INSTALLATION (XJ WITHOUT CONSOLE)

(1) Assemble lever and tensioner (Figs. 4 and 5).

(2) Verify that tensioner boot is properly seated in cover (Fig. 6).

(3) Position lever on floorpan and insert lever screws through floorpan. Be sure lever cover and seal are in place between lever and floorpan.

(4) Install parking brake switch on lever, if removed, and connect warning light wires to switch.

(5) Install lever cover. Secure cover with new rivets, or original attaching screws.

(6) Raise vehicle.

(7) Connect tensioner to lever with retaining pin and E-clip.

(8) Install nuts attaching lever support plate to lever screws.

(9) Adjust parking brakes. Refer to procedure in this section.

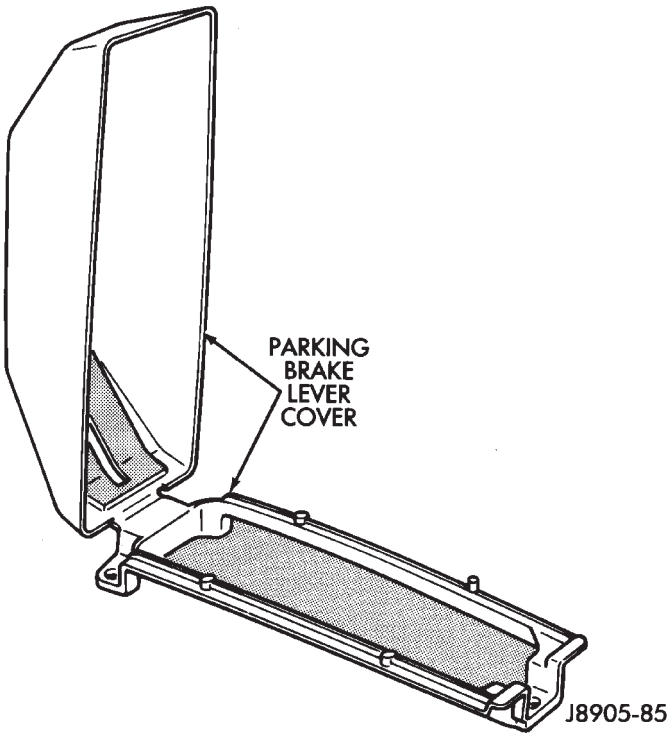

Fig. 12 Lever Cover (XJ)

PARKING BRAKE CABLE TENSIONER REPLACEMENT (XJ)

(1) Raise vehicle.
(2) Remove adjuster nut from tensioner rod. Secure equalizer and cables to nearby chassis component with wire.
(3) Remove nuts attaching lever assembly to support plate and floorpan.
(4) Lower vehicle.
(5) Remove console components and lever assembly cover.
(6) Remove lever and tensioner assembly.
(7) Move cover and boot for access to tensioner retaining pin.
(8) Remove E-clip and pin that attach tensioner to lever arm (Fig. 4).
(9) Remove tensioner from cover.
(10) Transfer boot to new tensioner if necessary.
(11) Attach tensioner to lever arm with pin and E-clip.
(12) Verify that E-clip is fully engaged in pin (Fig. 4).
(13) Align cover and seal on lever flange.
(14) Verify that tensioner boot is seated in cover (Fig. 6).
(15) Install assembled lever and tensioner in floorpan.
(16) Install necessary console components.
(17) Adjust parking brakes as described in this section.

PARKING BRAKE PEDAL REMOVAL (YJ)

(1) Raise vehicle.
(2) Loosen equalizer nuts until front cable is slack (Fig. 13).

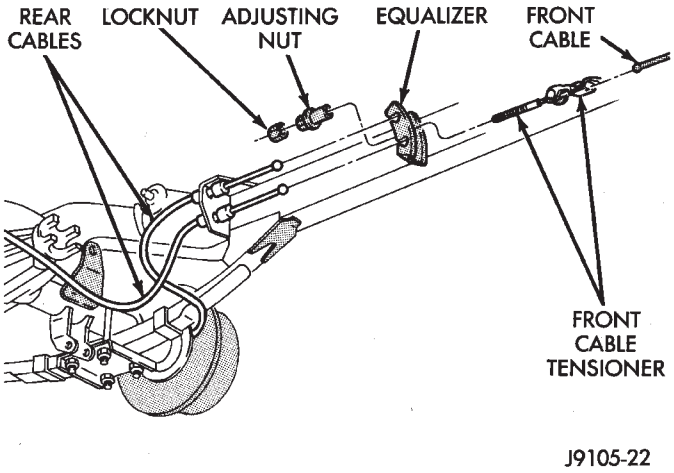

Fig. 13 Front Cable And Equalizer (YJ)

(3) Lower vehicle.
(4) Remove dash-to-instrument panel brace rod, if equipped.
(5) Disconnect warning light wire from parking brake switch on pedal assembly. Remove switch if replacement is necessary.
(6) On some YJ models, a ground wire may be attached to upper end of bolt that secures parking brake pedal to instrument panel. Wire is secured with a nut. Be sure to remove nut and detach ground wire before proceeding. If this wire is not removed beforehand, wire and harness could be damaged when pedal assembly bolt is removed. Ground wire and attaching nut are accessible from under instrument panel.
(7) Remove bolt securing pedal assembly to instrument panel (Fig. 14).
(8) In engine compartment, remove pedal mounting stud nuts.
(9) Remove pedal assembly from panel.
(10) Disengage front cable from retainer (Fig. 14).
(11) Squeeze cable clip (Fig. 14) and pull cable out of pedal frame.
(12) Remove pedal assembly.

PARKING BRAKE PEDAL INSTALLATION (YJ)

(1) Connect front cable to pedal retainer.
(2) Position pedal assembly on panel and install mounting stud nuts and pedal-to-dash bolt.
(3) Install ground wire on upper end of pedal-to-dash bolt and secure wire with attaching nut.
(4) Connect warning light switch wire to pedal connector.
(5) Install dash-to-instrument panel brace rod, if equipped.
(6) Raise vehicle and adjust brake cables. Refer to procedure in Service Adjustment section.

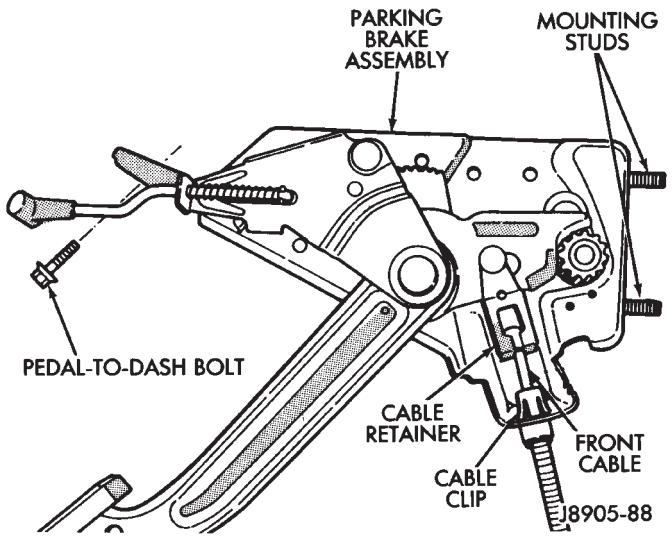

Fig. 14 Parking Brake Pedal Assembly (YJ)

PARKING BRAKE REAR CABLE REPLACEMENT (XJ)

(1) Raise vehicle and loosen equalizer nuts until rear cables are slack.

(2) Disengage cable from equalizer and remove cable clip and spring (Fig. 15).

(3) Remove rear wheel and brake drum.

(4) Remove secondary brakeshoe and disconnect cable from lever on brakeshoe.

(5) Compress cable retainer with worm drive hose clamp (Fig. 16) and remove cable from backing plate.

(6) Install new cable in backing plate. Be sure cable retainer is seated.

(7) Attach cable to lever on brakeshoe and install brakeshoe on backing plate.

(8) Adjust brakeshoes to drum with brake gauge.

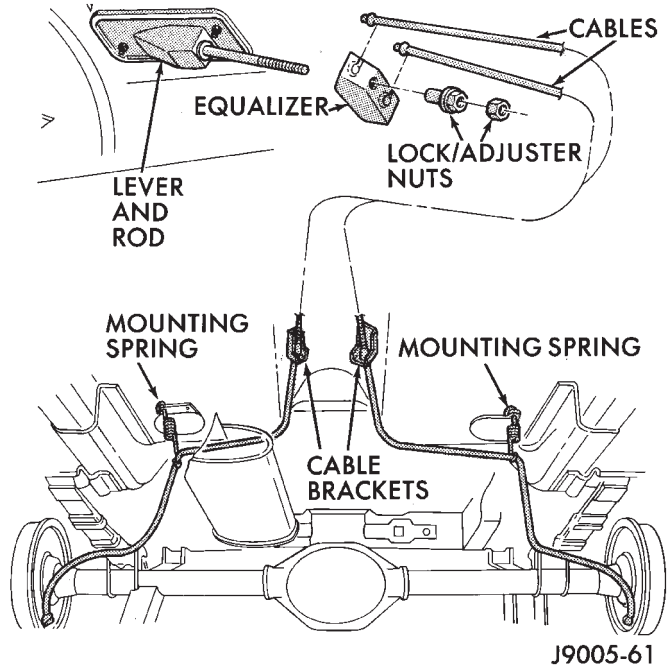

Fig. 15 Parking Brake Cables (XJ)

(9) Install brake drum and wheel.

(10) Engage cable in equalizer and install equalizer nuts (Fig. 15).

(11) Adjust parking brakes. Refer to procedure in this section.

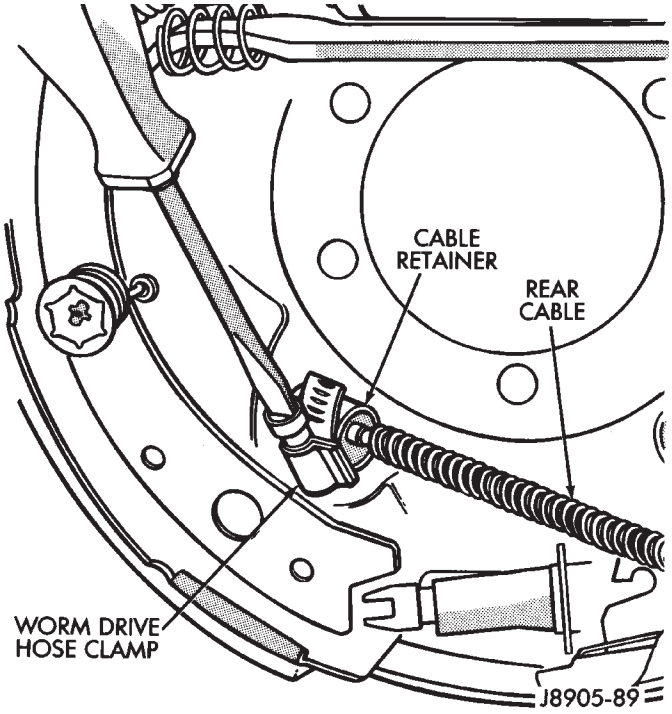

Fig. 16 Compressing Rear Cable Retainer

PARKING BRAKE FRONT CABLE REPLACEMENT (YJ)

(1) Raise vehicle.

(2) Remove equalizer nuts (Fig. 17).

(3) Remove front cable from equalizer (Fig. 17).

(4) Remove cable-to-frame bracket clip.

(5) Lower vehicle.

(6) Move front carpeting away from pedal.

(7) Compress clip securing cable to pedal frame (Fig. 17). Use hose clamp to compress clip.

(8) Disconnect cable from pedal retainer and remove cable.

(9) Remove grommet (Fig. 17) from old cable and transfer it to new cable, if necessary.

(10) Install new cable in floorpan and connect it to pedal assembly.

(11) Seat cable grommet in floorpan.

(12) Raise the vehicle.

(13) Install cable-to-frame retaining clip.

(14) Insert cable in equalizer and install equalizer washer and nuts.

(15) Adjust parking brakes as described in Service Adjustment section.

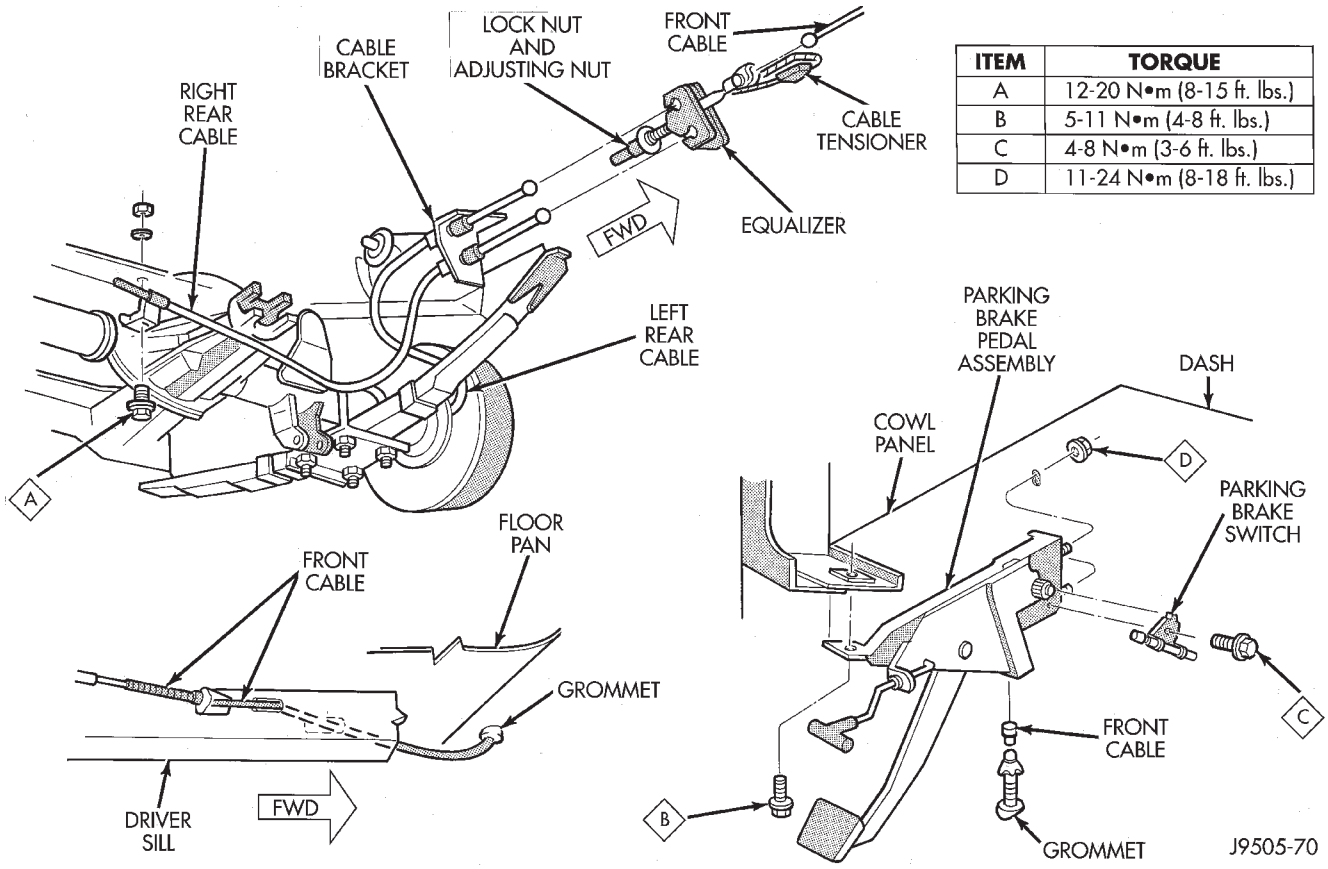

ITEM	TORQUE
A	12-20 N•m (8-15 ft. lbs.)
B	5-11 N•m (4-8 ft. lbs.)
C	4-8 N•m (3-6 ft. lbs.)
D	11-24 N•m (8-18 ft. lbs.)

Fig. 17 Parking Brake Components (YJ)

PARKING BRAKE REAR CABLE REPLACEMENT (YJ)

(1) Raise vehicle and loosen equalizer nuts (Fig. 17).

(2) Remove clamp and cotter pin attaching rear cable to equalizer and remove cable.

(3) Remove cable clips.

(4) Remove rear wheel and brake drum.

(5) Remove secondary brakeshoe and disconnect cable from lever on brakeshoe.

(6) Compress cable retainer with hose clamp (Fig. 16) and remove cable from backing plate.

(7) Install new cable in backing plate. Be sure cable retainer lock tabs are engaged in plate.

(8) Install secondary brakeshoe.

(9) Adjust brakeshoes to brake drum and install drum and wheel.

(10) Install cable in equalizer. Secure cable with retainer and cotter pin.

(11) Install cable clips.

(12) Adjust parking brakes. Refer to procedure in this section.

PARKING BRAKE SWITCH

The parking brake switch is located on the lever assembly on XJ models, or on the foot pedal assembly on YJ models (Fig. 18). Switch replacement is described in the parking brake lever or foot pedal removal/installation procedures in this section.

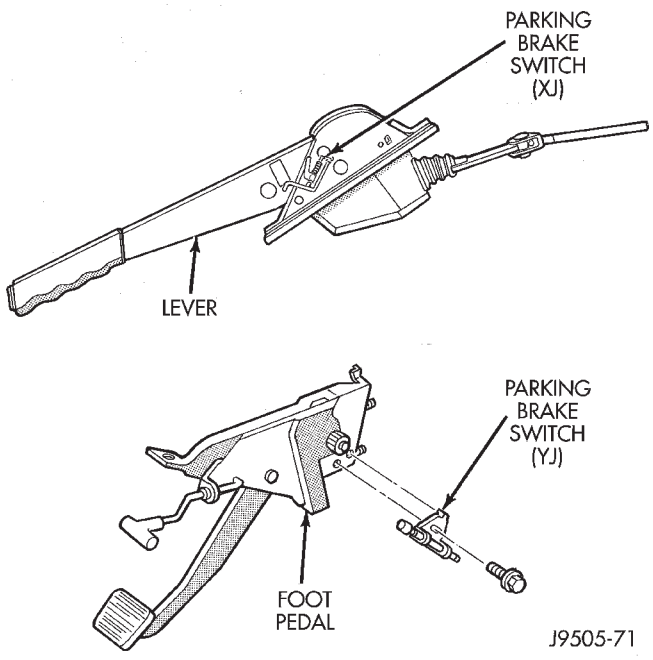

Fig. 18 Parking Brake Switch Location

PARKING BRAKE CABLE TENSIONER ADJUSTMENT (XJ/YJ)

Parking brake adjustment is only necessary when the tensioner, or a cable has been replaced or disconnected for service. When adjustment is necessary, perform adjustment only as described in the following procedure. This is necessary to avoid faulty parking brake operation.

(1) Raise vehicle.

(2) Back off tensioner adjusting nut to create slack in cables.

(3) Remove rear wheel/tire assemblies and remove brake drums.

(4) Check rear brakeshoe adjustment with standard brake gauge. Also check condition of brake parts as follows:

(a) Replace worn parts if necessary. **Excessive shoe-to-drum clearance, or worn brake components will result in faulty parking brake adjustment and operation.**

(b) Verify that parking brake cables operate freely and are not binding, or seized. Replace faulty cables, before proceeding.

(c) Adjust rear brakeshoes shoes to drum.

(5) Reinstall brake drums and wheel/tire assemblies after brakeshoe adjustment is complete.

(6) Lower vehicle enough for access to parking brake lever or foot pedal. **Then fully apply parking brakes. Leave brakes applied until adjustment is complete.**

(7) Raise vehicle again.

(8) Mark tensioner rod 6.5 mm (1/4 in.) from tensioner bracket (Fig. 19).

(9) Tighten adjusting nut at equalizer until mark on tensioner rod moves into alignment with tensioner bracket (Fig. 19). **Do not loosen/tighten equalizer adjusting nut for any reason after completing adjustment.**

(10) Lower vehicle until rear wheels are 15-20 cm (6-8 in.) off shop floor.

(11) Release parking brake lever and verify that rear wheels rotate freely without drag.

(12) Lower vehicle.

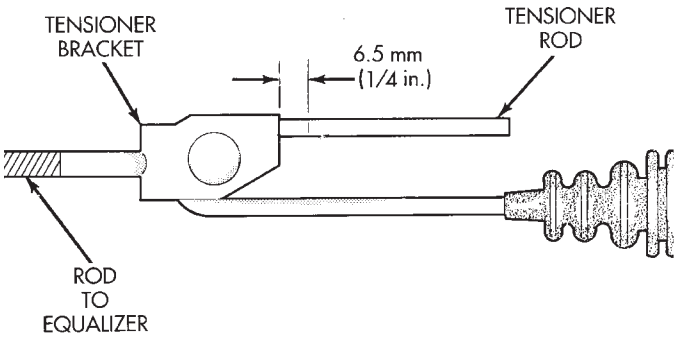

Fig. 19 Placing Adjustment Mark On Tensioner Rod

SPECIFICATIONS

BRAKE TORQUE SPECIFICATIONS

Description	Torque
Acceleration Sensor Screws:	
at sensor	8-9 N•m (71-83 in. lbs.)
at bracket	1-2 N•m (13-18 in. lbs.)
Brake Booster Mounting Nuts	41 N•m (30 ft. lbs.)
Brakeline Fittings At:	
combination valve	18-24 N•m (160-210 in. lbs.)
front brake hose	15-18 N•m (130-160 in. lbs.)
HCU	14-16 N•m (125-140 in. lbs.)
master cylinder primary outlet	14-16 N•m (125-140 in. lbs.)
master cylinder secondary outlet	15-18 N•m (135-160 in. lbs.)
rear brakeline (to hose)	15-18 N•m (130-160 in. lbs.)
wheel cylinder	15-18 N•m (130-160 in. lbs.)
Brake Pedal Support Bolt	23-34 N•m (200-300 in. lbs.)
Brake Pedal Pivot Bolt/Nut	27-35 N•m (20-26 ft. lbs.)
Caliper Mounting Bolts	10-20 N•m (7-15 ft. lbs.)
Combination Valve Adaptor Fittings	23-27 N•m (200-240 in. lbs.)
ECU Mounting Screws	8-13 N•m (75-115 in. lbs.)

Description	Torque
Front Brake Hose Bracket Screw	4-6 N•m (34-50 in. lbs.)
Front Brake Hose Fitting Bolt	24-38 N•m (216-336 in. lbs.)
Front Wheel Sensor Bracket Bolt	4-6 N•m (34-50 in. lbs.)
HCU Bracket Attaching Nuts	10-13 N•m (92-112 in. lbs.)
Master Cylinder Attaching Nuts	13-25 N•m (115-220 in. lbs.)
Parking Brake Cable Retainer Nut	1-2 N•m (12-16 in. lbs.)
Parking Brake Lever Screws	10-14 N•m (85-125 in. lbs.)
Parking Lever Bracket Screws	10-14 N•m (85-125 in. lbs.)
Rear Axle Vent Fitting	11-18 N•m (100-160 in. lbs.)
Rear Brake Hose Bracket Screw	8-9 N•m (74-82 in. lbs.)
Rear Sensor Axle Bracket Bolt	8-9 N•m (74-82 in. lbs.)
Rear Sensor Bolt	12-14 N•m (10-11 ft. lbs.)
Support Plate Bolts/Nuts	43-61 N•m (32-45 ft. lbs.)
Wheel Cylinder Bolts	10 N•m (90 in. lbs.)
Wheel Lug Nuts	120 N•m (88 ft. lbs.)

J9305-17

CLUTCH

CONTENTS

page

CLUTCH DIAGNOSIS 3
CLUTCH SERVICE 10
GENERAL INFORMATION 1

GENERAL INFORMATION

INDEX

page

Clutch Components 1
Clutch Linkage Fluid 1
Clutch Operation 2
Hydraulic Linkage Components 1

CLUTCH COMPONENTS

The clutch mechanism in XJ/YJ models consists of a single, dry-type disc and a diaphragm style clutch cover. A hydraulic linkage is used to operate the clutch release bearing and fork.

A needle-type pilot bearing supports the transmission input shaft in the crankshaft. A sleeve type release bearing is used to engage and disengage the clutch cover pressure plate.

The release bearing is operated by a release fork in the clutch housing. The fork pivots on a ball stud mounted in the housing. The release fork is actuated by a hydraulic slave cylinder mounted in the housing. The slave cylinder is operated by a clutch master cylinder mounted on the dash panel. The cylinder push rod is connected to the clutch pedal.

The clutch disc has cushion springs in the disc hub. The clutch disc facing is riveted to the hub. The facing is made from a non-asbestos material. The clutch cover pressure plate is a diaphragm type with a one-piece spring and multiple release fingers. The pressure plate release fingers are preset during manufacture and are not adjustable.

HYDRAULIC LINKAGE COMPONENTS

The hydraulic linkage consists of a clutch master cylinder with integral reservoir, a clutch slave cylinder and an interconnecting fluid line.

The clutch master cylinder push rod is connected to the clutch pedal. The slave cylinder push rod is connected to the clutch release fork. The master cylinder is mounted on the driver side of the dash panel adjacent to the brake master cylinder and booster assembly. This positioning is similar for both left and right hand drive models.

CLUTCH LINKAGE FLUID

The integral clutch master cylinder reservoir, slave cylinder and fluid lines are prefilled with fluid prior to assembly operations.

The hydraulic system should not require additional fluid under normal circumstances. In fact, **the reservoir fluid level will actually increase as normal clutch wear occurs. For this reason, it is important to avoid overfilling, or removing fluid from the reservoir. This will cause clutch release problems.**

If inspection or diagnosis indicates additional fluid may be needed, use Mopar brake fluid, or an equivalent meeting standards SAE J1703 and DOT 3. Do not use any other type of fluid.

CLUTCH OPERATION

Leverage, clamping force, and friction are what make the clutch work. The disc serves as the friction element and a diaphragm spring and pressure plate provide the clamping force. The clutch pedal, hydraulic linkage, release lever and bearing provide the leverage.

The clutch cover assembly clamps the disc against the flywheel. The assembly consists of the cover, diaphragm spring, pressure plate, and fulcrum components. The pressure plate clamps the clutch disc against the flywheel and the spring provides the clamping force.

The clutch disc friction material is riveted to the disc hub. The hub bore is splined for installation on the transmission input shaft. The hub splines connect the disc to the transmission.

The clutch linkage uses hydraulic pressure to operate the clutch. The clutch master cylinder push rod is connected to the clutch pedal and the slave cylinder push rod is connected to the release lever in the clutch housing.

Depressing the clutch pedal develops fluid pressure in the clutch master cylinder. This pressure is transmitted to the slave cylinder through a connecting line. In turn, the slave cylinder operates the clutch release lever.

The clutch release bearing is mounted on the transmission front bearing retainer. The bearing is attached to the release lever, which moves the bearing into contact with the clutch cover diaphragm spring.

Slave cylinder force causes the release lever to move the release bearing into contact with the diaphragm spring. As additional force is applied, the bearing presses the diaphragm spring fingers inward on the fulcrums. This action moves the pressure plate rearward relieving clamp force on the disc. The clutch disc is disengaged and freewheeling at this point.

The process of clutch re-engagement, is simply the reverse of what occurs during disengagement. Releasing pedal pressure removes clutch linkage pressure. The release bearing moves away from the diaphragm spring which allows the pressure plate to exert clamping force on the clutch disc.

CLUTCH DIAGNOSIS

INDEX

	page		page
Clutch Contamination	3	Flywheel Runout	3
Clutch Cover and Disc Runout	3	General Diagnosis Information	3
Clutch Housing Misalignment	4	Inspection and Diagnosis Charts	4
Clutch Misalignment	3	Installation Methods and Parts Usage	4

GENERAL DIAGNOSIS INFORMATION

Unless the cause of a clutch problem is obvious, accurate problem diagnosis will usually require a road test to confirm a problem. Component inspection will then be required to determine the actual problem cause.

During a road test, drive the vehicle at normal speeds. Shift the transmission through all gear ranges and observe clutch action. If chatter, grab, slip, or improper release is experienced, remove and inspect the clutch components. However, if the problem is noise or hard shifting, further diagnosis may be needed as the transmission or another driveline component may be at fault. Careful observation during the test will help narrow the problem area.

CLUTCH CONTAMINATION

Fluid contamination is a frequent cause of clutch malfunctions. Oil, water, or clutch fluid on the clutch disc and pressure plate surfaces will cause chatter, slip and grab.

During inspection, note if any components are contaminated with oil, hydraulic fluid, or water/road splash.

Oil contamination indicates a leak at either the rear main seal or transmission input shaft. Oil leakage produces a residue of oil on the housing interior and on the clutch cover and flywheel. Heat buildup caused by slippage between the cover, disc and flywheel, can sometimes bake the oil residue onto the components. The glaze-like residue ranges in color from amber to black.

Road splash contamination means dirt/water is entering the clutch housing due to loose bolts, housing cracks, or through hydraulic line openings. Driving through deep water puddles can force water/road splash into the housing through such openings.

Clutch fluid leaks are usually from damaged slave cylinder push rod seals. This type of leak can only be confirmed by visual inspection.

CLUTCH MISALIGNMENT

Clutch components must be in proper alignment with the crankshaft and transmission input shaft. Misalignment caused by excessive runout or warpage of any clutch component will cause grab, chatter and improper clutch release.

FLYWHEEL RUNOUT

Check flywheel runout whenever misalignment is suspected. Flywheel runout should not exceed 0.08 mm (0.003 in.). Measure runout at the outer edge of the flywheel face with a dial indicator. Mount the indicator on a stud installed in place of one of the flywheel bolts.

Common causes of runout are:

- heat warpage
- improper machining
- incorrect bolt tightening
- improper seating on crankshaft flange shoulder
- foreign material on crankshaft flange

Flywheel machining is not recommended. The flywheel clutch surface is machined to a unique contour and machining will negate this feature. However, minor flywheel scoring can be cleaned up by hand with 180 grit emery, or with surface grinding equipment. Remove only enough material to reduce scoring (approximately 0.001 - 0.003 in.). Heavy stock removal is **not recommended.** Replace the flywheel if scoring is severe and deeper than 0.076 mm (0.003 in.). Excessive stock removal can result in flywheel cracking or warpage after installation; it can also weaken the flywheel and interfere with proper clutch release.

Clean the crankshaft flange before mounting the flywheel. Dirt and grease on the flange surface may cock the flywheel causing excessive runout. Use new bolts when remounting a flywheel and secure the bolts with Mopar Lock And Seal. Tighten flywheel bolts to specified torque only. Overtightening can distort the flywheel hub causing runout.

CLUTCH COVER AND DISC RUNOUT

Check the clutch disc before installation. Axial (face) runout of a **new** disc should not exceed 0.50 mm (0.020 in.). Measure runout about 6 mm (1/4 in.) from the outer edge of the disc facing. Obtain another disc if runout is excessive.

Check condition of the clutch before installation. A warped cover or diaphragm spring will cause grab and incomplete release or engagement. Be careful

when handling the cover and disc. Impact can distort the cover, diaphragm spring, release fingers and the hub of the clutch disc.

Use an alignment tool when positioning the disc on the flywheel. The tool prevents accidental misalignment which could result in cover distortion and disc damage.

A frequent cause of clutch cover distortion (and consequent misalignment) is improper bolt tightening. To avoid warping the cover, the bolts must tightened alternately (diagonal pattern) and evenly (2-3 threads at a time) to specified torque.

CLUTCH HOUSING MISALIGNMENT

Clutch housing alignment is important to proper clutch operation. The housing maintains alignment between the crankshaft and transmission input shaft. Misalignment can cause clutch noise, hard shifting, incomplete release and chatter. It can also result in premature wear of the pilot bearing, cover release fingers and clutch disc. In severe cases, misalignment can also cause premature wear of the transmission input shaft and front bearing.

Housing misalignment is generally caused by incorrect seating on the engine or transmission, loose housing bolts, missing alignment dowels, or housing damage. Infrequently, misalignment may also be caused by housing mounting surfaces that are not completely parallel. Misalignment can be corrected with shims.

INSTALLATION METHODS AND PARTS USAGE

Distortion of clutch components during installation and the use of non-standard components are additional causes of clutch malfunction.

Improper clutch cover bolt tightening can distort the cover. The usual result is clutch grab, chatter and rapid wear. Tighten the cover bolts as described in Clutch Service section.

An improperly seated flywheel and/or clutch housing are additional causes of clutch failure. Improper seating will produce misalignment and additional clutch problems.

The use of non-standard or low quality parts will also lead to problems and wear. Use recommended factory quality parts to avoid comebacks.

A cocked pilot bearing is another cause of clutch noise, drag, and hard shifting, and rapid bearing wear. Always use an alignment tool to install a new bearing. This practice helps avoid cocking the bearing during installation.

INSPECTION AND DIAGNOSIS CHARTS

The clutch inspection chart (Fig. 1) outlines items to be checked before and during clutch installation. Use the chart as a check list to help avoid overlooking potential problem sources during service operations.

The diagnosis charts describe common clutch problems, causes and correction. Fault conditions are listed at the top of each chart. Conditions, causes and corrective action are outlined in the indicated columns.

The charts are provided as a convenient reference when diagnosing faulty clutch operation.

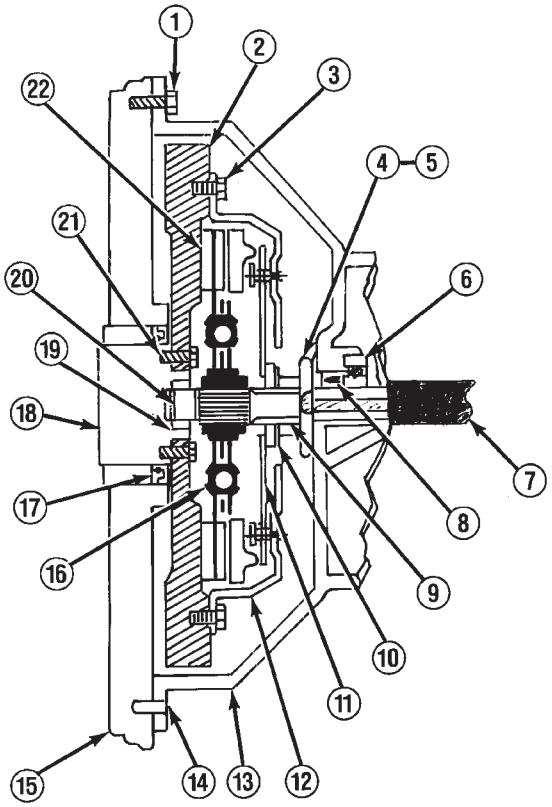

1 Check clutch housing bolts. Tighten if loose. Be sure housing is fully seated on engine block.

2 Check flywheel. Scuff sand face to remove glaze. Clean surface with wax and grease remover. Replace flywheel if severely scored, worn or cracked. Secure flywheel with new bolts (if removed). Do not reuse old bolts. Use Mopar Lock N'Seal on bolts.

3 Tighten clutch cover bolts 2-3 threads at a time, alternately and evenly (in a star pattern) to specified torque. Failure to do so could warp the cover.

4 Check release fork. Replace fork if bent or worn. Make sure pivot and bearing contact surfaces are lubricated.

5 Check release fork pivot (in housing). Be sure pivot is secure and ball end is lubricated.

6 Transmission input shaft bearing will cause noise, chatter, or improper release if damaged. Check condition before installing transmission.

7 Check slave cylinder. Replace it if leaking. Be sure cylinder is properly secured in housing and cylinder piston is seated in release fork.

8 Check input shaft seal if clutch cover and disc were oil covered. Replace seal if worn, or cut.

9 Inspect release bearing slide surface of trans. front bearing retainer. Surface should be smooth, free of nicks, scores. Replace retainer if necessary. Lubricate slide surface before installing release bearing.

10 Do not replace release bearing unless actually faulty. Replace bearing only if seized, noisy, or damaged.

11 Check clutch cover diaphragm spring and release fingers. Replace cover if spring or fingers are bent, warped, broken, cracked. Do not tamper with factory spring setting as clutch problems will result.

12 Check condition of clutch cover. Replace clutch cover if plate surface is deeply scored, warped, worn, or cracked. Be sure cover is correct size and properly aligned on disc and flywheel.

13 Inspect clutch housing. Be sure bolts are tight. Replace housing if damaged.

14 Verify that housing alignment dowels are in position before installing housing.

15 Clean engine block surface before installing clutch housing. Dirt, grime can produce misalignment.

16 Make sure side of clutch disc marked "flywheel side" is toward flywheel.

17 Check rear main seal if clutch disc and cover were oil covered. Replace seal if necessary.

18 Check crankshaft flange (if flywheel is removed). Be sure flange is clean and flywheel bolt threads are in good condition.

19 Check pilot bearing. Replace bearing if damaged. Lube with Mopar high temp. bearing grease before installation.

20 Check transmission input shaft. Disc must slide freely on shaft splines. Lightly grease splines before installation. Replace shaft if splines or pilot bearing hub are damaged.

21 Check flywheel bolt torque. If bolts are loose, replace them. Use Mopar Lock N'Seal to secure new bolts.

22 Check clutch disc facing. Replace disc if facing is charred, scored, flaking off, or worn. Also check runout of new disc. Runout should not exceed 0.5 mm (0.02 in.).

J9506-2

Fig. 1 Clutch Inspection Points

CONDITION	POSSIBLE CAUSES	CORRECTION
DISC FACING WORN OUT	1. Normal wear. Driver frequently rides (slips) clutch. Results in rapid wear overheating. Insufficient clutch cover diaphragm spring tension.	1. Replace clutch disc. Also replace cover if spring is weak or pressure plate surface is damaged.
CLUTCH DISC FACING CONTAMINATED WITH OIL, GREASE, OR CLUTCH FLUID	1. Leak at rear main seal or at transmission input shaft seal. Excessive amount of grease applied to input shaft splines. Road splash, water entering housing. Slave cylinder leaking.	1. Replace leaking seals. Apply less grease to input shaft splines. Replace clutch disc (do not clean and reuse). Clean clutch cover and reuse only if cover is in good condition. Replace slave cylinder if leaking.
CLUTCH IS RUNNING PARTIALLY DISENGAGED	1. Release bearing sticking-binding. Does not return to normal running position.	1. Verify that bearing is actually binding, then replace bearing and transmission front bearing retainer if sleeve surface is damaged.
FLYWHEEL HEIGHT INCORRECT	1. Flywheel surface improperly machined. Too much stock removed or surface is tapered.	1. Replace flywheel.
WRONG DISC OR PRESSURE PLATE INSTALLED	1. Incorrect parts order or model number.	1. Replace with correct parts. Compare old and new parts before installation.
CLUTCH DISC, COVER AND/OR DIAPHRAGM SPRING, WARPED, DISTORTED	1. Rough handling (impact) bent cover, spring, or disc. Incorrect bolt tightening sequence and method caused warped cover.	1. Install new disc or cover as needed. Follow installation/tightening instructions.
FACING ON FLYWHEEL SIDE OF DISC TORN, GOUGED, WORN	1. Flywheel surface scored and nicked.	1. Reduce scores and nicks by sanding or surface grinding. Replace flywheel if scores-nicks are deeper than .002-.004 inch.
CLUTCH DISC FACING BURNT (CHARRED). FLYWHEEL AND COVER PRESSURE PLATE SURFACES HEAVILY GLAZED	1. Frequent operation under high loads or hard acceleration conditions. Driver frequently rides (slips) clutch. Results in rapid wear and overheating of disc and cover.	1. Scuff sand flywheel. Replace clutch cover and disc. Alert driver to problem cause.

CONDITION	POSSIBLE CAUSES	CORRECTION
CLUTCH DISC WARPED	1. New disc not checked for axial runout before installation.	1. Replace disc. Be sure runout of new disc is less than .5 mm (.020 in.).
CLUTCH DISC BINDS ON INPUT SHAFT SPLINES	1. Clutch disc hub splines damaged during installation. Input shaft splines rough, damaged. Corrosion, rust formations on splines of disc and input shaft.	1. Clean, smooth and lubricate disc and shaft splines. Replace disc and/or input shaft if splines are severely damaged.
CLUTCH DISC RUSTED TO FLYWHEEL AND/OR PRESSURE PLATE	1. Occurs in vehicles stored, or not driven for extended periods of time. Also occurs after steam cleaning if vehicle is not used for extended period.	1. Remove clutch cover and disc. Sand rusted surfaces clean with 180 grit paper. Replace disc cover, and flywheel if corrosion is severe.
CLUTCH DISC FACING STICKS TO FLYWHEEL	1. Vacuum may form in pockets over rivet heads in clutch disc. Occurs as clutch cools down after use.	1. Drill 1/16 inch diameter hole through rivets and scuff sand disc facing with 180 grit paper.
CLUTCH DISC TOO THICK	1. Wrong disc installed.	1. Replace disc.
PILOT BEARING SEIZED, LOOSE, OR ROLLERS ARE WORN	1. Bearing cocked during installation. Bearing defective. Bearing not lubricated. Clutch misalignment.	1. Lubricate and install new bearing. Check and correct any misalignment.
CLUTCH WILL NOT DISENGAGE PROPERLY	1. Low clutch fluid level. 2. Clutch cover loose. 3. Wrong clutch disc. 4. Disc bent, distorted during installation. 5. Clutch cover diaphragm spring bent or warped during transmission installation. 6. Clutch disc installed backwards. 7. Release fork bent or fork pivot is loose or damaged. 8. Clutch master or slave cylinder fault.	1. Top off reservoir and check for leaks. 2. Tighten bolts. 3. Install correct disc. 4. Replace disc. 5. Replace cover. 6. Remove and reinstall disc correctly. Be sure disc side marked "to flywheel" is actually toward flywheel. 7. Replace fork and pivot if worn or damaged. 8. Replace master and slave cylinder as assembly.

CONDITION	POSSIBLE CAUSES	CORRECTION
CLUTCH DISC FACING COVERED WITH OIL, GREASE, OR CLUTCH FLUID	1. Oil leak at rear main or input shaft seal. 2. Too much grease applied to splines or disc and input shaft.	1. Correct leak and replace disc (do not clean and reuse the disc). 2. Apply lighter grease coating to splines and replace disc (do not clean and reuse the disc).
CLUTCH DISC AND/OR COVER WARPED, OR DISC FACINGS EXHIBIT UNUSUAL WRONG TYPE	1. Incorrect or substandard parts.	1. Replace disc and/or cover with correct parts.
CLUTCH MASTER OR SLAVE CYLINDER PLUNGER DRAGGING-BINDING	1. Master or slave cylinder components worn or corroded.	1. Replace both cylinders as assembly (and reservoir).
NO FAULT FOUND WITH CLUTCH COMPONENTS	1. Problem actually related to suspension or driveline component. 2. Engine related problem.	1. Further diagnosis required. Check engine/transmission mounts, propeller shafts and U-joints, tires, suspension attaching parts and other driveline components as needed. 2. Check EFI and ignition systems.
PARTIAL ENGAGEMENT OF CLUTCH DISC (ONE SIDE WORN-OPPOSITE SIDE GLAZED AND LIGHTLY WORN)	1. Clutch pressure plate position setting incorrect or modified. 2. Clutch cover, spring, or release fingers bent, distorted (rough handling, improper assembly). 3. Clutch disc damaged or distorted. 4. Clutch misalignment.	1. Replace clutch cover and disc. 2. Replace clutch cover and disc. 3. Replace disc. 4. Check alignment and runout of flywheel, disc, or cover and/or clutch housing. Correct as necessary.

CONDITION	POSSIBLE CAUSE	CORRECTION
Clutch components damaged or worn out prematurely.	1. Incorrect or sub-standard clutch parts.	1. Replace with parts of correct type and quality.
Pilot bearing damaged.	1. Bearing cocked during installation. Bearing not lubricated prior to installation. Bearing defect. 2. Clutch misalignment.	1. Replace bearing. Be sure it is properly seated and lubricated before installing clutch. 2. Check and correct misalignment caused by excessive runout of flywheel, disc, cover or clutch housing. Replace input shaft if bearing hub is damaged.
Loose components.	1. Attaching bolts loose at flywheel, cover, or clutch housing.	1. Tighten bolts to specified torque. Replace any clutch bolts that are damaged.
Components appear overheated. Hub of disc cracked or torsion damper springs are distorted or broken.	1. Frequent high load, full throttle operation.	1. Replace parts as needed. Alert driver to condition causes.
Contact surface of release bearing damaged.	1. Clutch cover incorrect, or release fingers are bent or distorted causing damage. 2. Release bearing defect. 3. Release bearing misaligned.	1. Replace clutch cover and bearing. 2. Replace bearing. 3. Check and correct runout of clutch components. Check front bearing retainer sleeve surface. Replace if damaged.
Release bearing is noisy.	1. Release bearing defect.	1. Replace bearing.
Clutch pedal squeak.	1. Pivot pin loose. Pedal bushings worn out or cracked.	1. Tighten pivot pin. Replace bushings if worn or damaged. Lubricate pin and bushings with silicone base lubricator chassis grease.

CLUTCH SERVICE

INDEX

	page
Clutch Component Lubrication	10
Clutch Cover and Disc Installation	10
Clutch Cover and Disc Removal	10
Clutch Fluid Level	14
Clutch Housing Replacement	13
Clutch Hydraulic Linkage Installation	14
Clutch Hydraulic Linkage Removal	13
Clutch Pedal Installation	15
Clutch Pedal Removal	15
Clutch Safety Precautions	10
Flywheel Service	16
Pilot Bearing Replacement	12
Release Bearing Replacement	11

CLUTCH SAFETY PRECAUTIONS

WARNING: EXERCISE CARE WHEN SERVICING CLUTCH COMPONENTS. DUST AND DIRT ON CLUTCH PARTS USE MAY CONTAIN ASBESTOS FIBERS. BREATHING EXCESSIVE CONCENTRATIONS OF THESE FIBERS CAN CAUSE SERIOUS BODILY HARM. WEAR A RESPIRATOR DURING SERVICE AND NEVER CLEAN CLUTCH COMPONENTS WITH COMPRESSED AIR OR WITH A DRY BRUSH. EITHER CLEAN THE COMPONENTS WITH A WATER DAMPENED RAGS OR USE A VACUUM CLEANER SPECIFICALLY DESIGNED FOR REMOVING ASBESTOS FIBERS AND DUST. DO NOT CREATE DUST BY SANDING A CLUTCH DISC. REPLACE THE DISC IF THE FRICTION MATERIAL IS DAMAGED OR CONTAMINATED. DISPOSE OF ALL DUST AND DIRT CONTAINING ASBESTOS FIBERS IN SEALED BAGS OR CONTAINERS. THIS WILL HELP MINIMIZE EXPOSURE TO YOURSELF AND TO OTHERS. FOLLOW ALL RECOMMENDED SAFETY PRACTICES PRESCRIBED BY THE OCCUPATIONAL SAFETY AND HEALTH ADMINISTRATION (OSHA) AND THE ENVIRONMENTAL SAFETY AGENCY (EPA), FOR THE HANDLING AND DISPOSAL OF PRODUCTS CONTAINING ASBESTOS.

CLUTCH COMPONENT LUBRICATION

Proper clutch component lubrication is important to satisfactory operation. Using the correct lubricant and not overlubricating are equally important. Apply recommended lubricant sparingly to avoid disc and pressure plate contamination.

Clutch and transmission components requiring lubrication are:

- pilot bearing
- release lever pivot ball stud
- release lever contact surfaces
- release bearing bore
- clutch disc hub splines
- clutch pedal pivot shaft bore
- clutch pedal bushings
- input shaft splines
- input shaft pilot hub
- transmission front bearing retainer slide surface

Never apply grease to any part of the clutch cover, or disc.

Recommended Lubricants

Use Mopar multi-purpose grease for the clutch pedal bushings and pivot shaft. Use Mopar high temperature grease (or equivalent) for all other lubrication requirements. Apply recommended amounts and do not overlubricate.

CLUTCH COVER AND DISC REMOVAL

(1) Remove transmission. Refer to procedures in Group 21.

(2) If original clutch cover will be reinstalled, mark position of cover on flywheel for assembly reference. Use paint or a scriber for this purpose.

(3) If clutch cover is to be replaced, cover bolts can be removed in any sequence. However, if original cover will be reinstalled, loosen cover bolts evenly and in rotation to relieve spring tension equally. This is necessary avoid warping cover.

(4) Remove cover bolts and remove cover and disc (Fig. 2).

CLUTCH COVER AND DISC INSTALLATION

(1) Lightly scuff sand flywheel face with 180 grit emery cloth. Then clean surface with a wax and grease remover.

(2) Lubricate pilot bearing with Mopar high temperature bearing grease.

(3) Check runout and free operation of new clutch disc as follows:

(a) Slide disc onto transmission input shaft splines. Disc should slide freely on splines.

(b) Leave disc on shaft and check face runout with dial indicator. Check runout at disc hub and about 6 mm (1/4 in.) from outer edge of facing.

(c) Face runout should not exceed 0.5 mm (0.020 in.). Obtain another clutch disc if runout exceeds this limit.

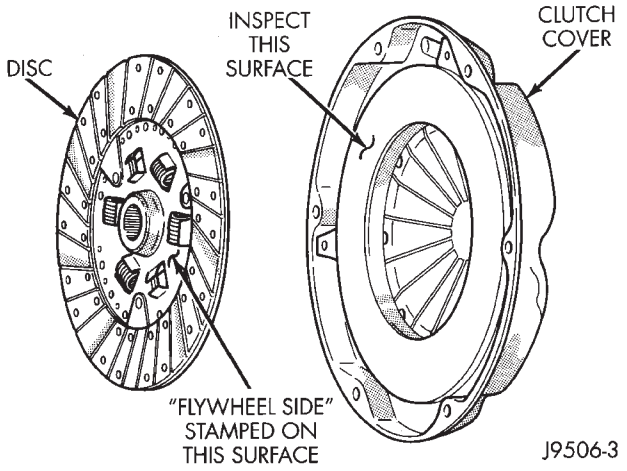

Fig. 2 Clutch Disc And Pressure Plate Inspection

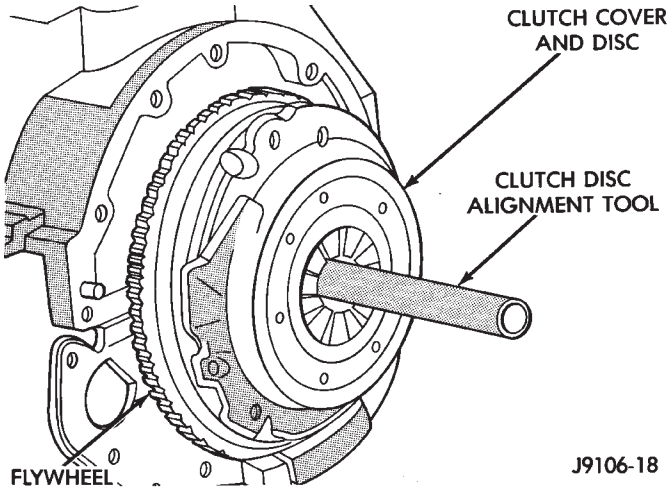

Fig. 3 Typical Method Of Aligning Clutch Disc

(4) Position clutch disc on flywheel. Be sure side of disc marked flywheel side is positioned against flywheel (Fig. 2). If disc is not marked, be sure flat side of disc hub is toward flywheel.

(5) Inspect condition of pressure plate surface of clutch cover (Fig. 2). Replace cover if this surface is worn, heat checked, cracked, or scored.

(6) Insert clutch alignment tool in clutch disc (Fig. 3).

(7) Insert alignment tool in pilot bearing and position disc on flywheel. Be sure disc hub is positioned correctly. Side of hub marked Flywheel Side should face flywheel (Fig. 2). If disc is not marked, place flat side of disc against flywheel.

(8) Position clutch cover over disc and on flywheel (Fig. 3).

(9) Install clutch cover bolts finger tight.

(10) Tighten cover bolts evenly and in rotation a few threads at a time. **Cover bolts must be tightened evenly and to specified torque to avoid distorting cover. Tightening torques are 31 N·m (23 ft. lbs.) on 2.5L engines and 54 N·m (40 ft. lbs.) on 4.0L engines.**

(11) Apply light coat of Mopar high temperature bearing grease to pilot bearing hub and splines of transmission input shaft. **Do not overlubricate shaft splines. This will result in grease contamination of disc.**

(12) Install transmission (Figs. 4 and 5). Refer to procedures in Group 21.

RELEASE BEARING REPLACEMENT

(1) Remove transmission as described in Group 21.

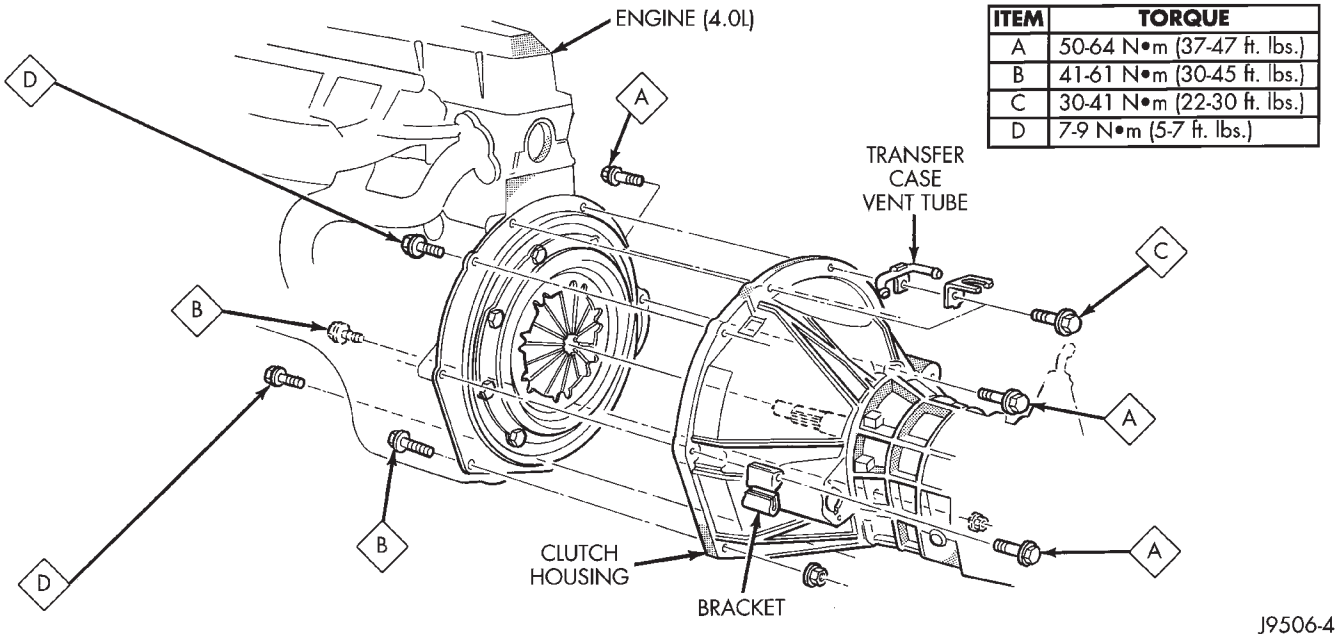

ITEM	TORQUE
A	50-64 N•m (37-47 ft. lbs.)
B	41-61 N•m (30-45 ft. lbs.)
C	30-41 N•m (22-30 ft. lbs.)
D	7-9 N•m (5-7 ft. lbs.)

Fig. 4 Manual Transmission Mounting (4.0L)

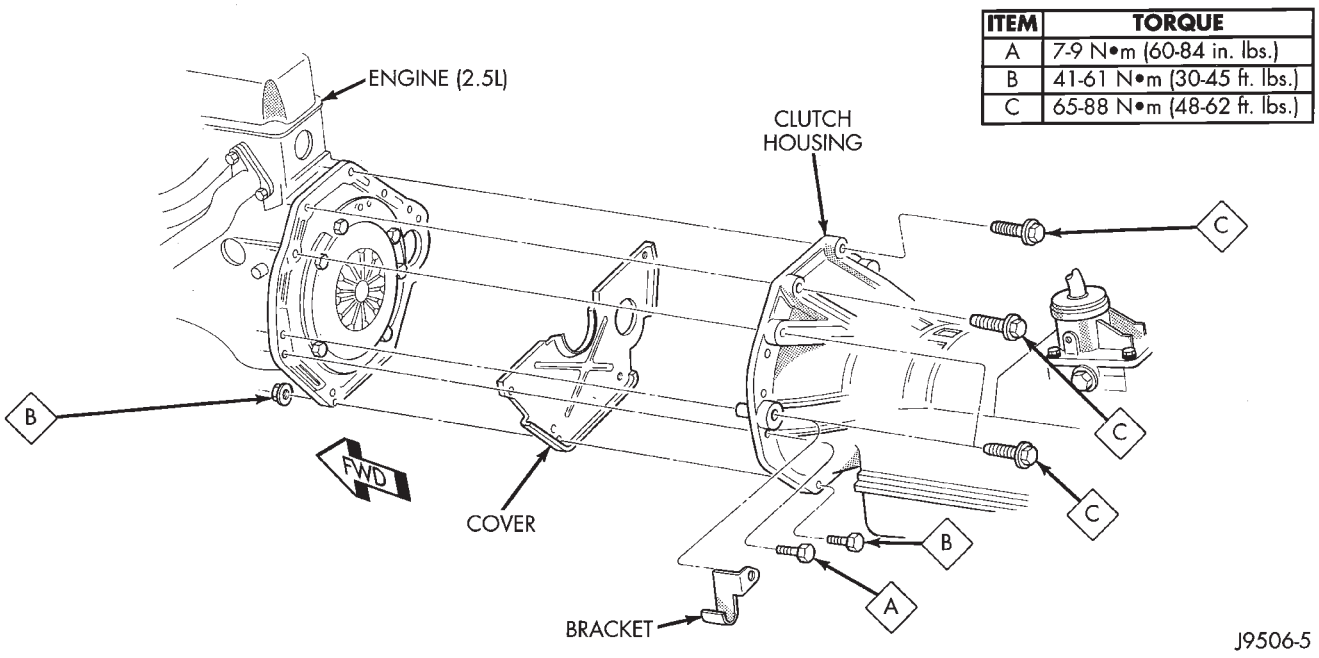

Fig. 5 Manual Transmission Mounting (2.5L)

(2) Disconnect release bearing from release lever and remove bearing (Fig. 6).

(3) Inspect bearing slide surface of transmission front bearing retainer. Replace retainer if slide surface is scored, worn, or cracked.

(4) Inspect release fork and fork pivot. Be sure pivot is secure and in good condition. Be sure fork is not distorted or worn. Replace release fork retainer spring if bent or damaged in any way.

(5) Lubricate crankshaft pilot bearing with Mopar high temperature bearing grease. Apply grease to end of long shank, small diameter flat blade screwdriver. Then insert tool through clutch disc hub to reach bearing.

(6) Lubricate input shaft splines, bearing retainer slide surface, fork pivot and release fork pivot surface with Mopar high temperature grease.

(7) Install new release bearing. Be sure bearing is properly secured to release fork.

(8) Install transmission as described in Group 21.

PILOT BEARING REPLACEMENT

(1) Remove transmission. Refer to Group 21 for procedure.

(2) Remove clutch cover and disc.

(3) Remove pilot bearing. Use internal (blind hole) puller such those as supplied in Snap On Tool Set CG40CB to remove bearing.

(4) Lubricate new bearing with Mopar high temperature bearing grease.

(5) Start new bearing into crankshaft by hand. Then seat bearing with clutch alignment tool (Fig. 7).

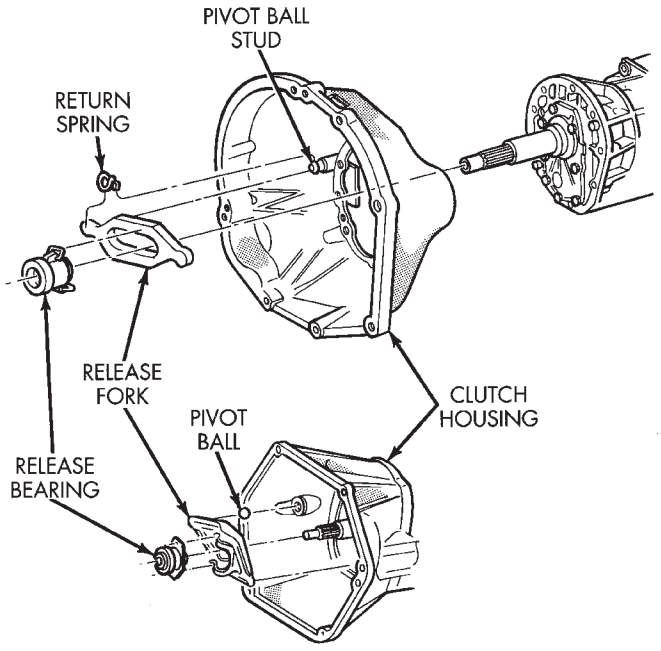

Fig. 6 Release Bearing Attachment

(6) Lightly scuff sand flywheel surface with 180 grit emery cloth. Then clean surface with wax and grease remover.

(7) Install clutch disc and cover as described in this section.

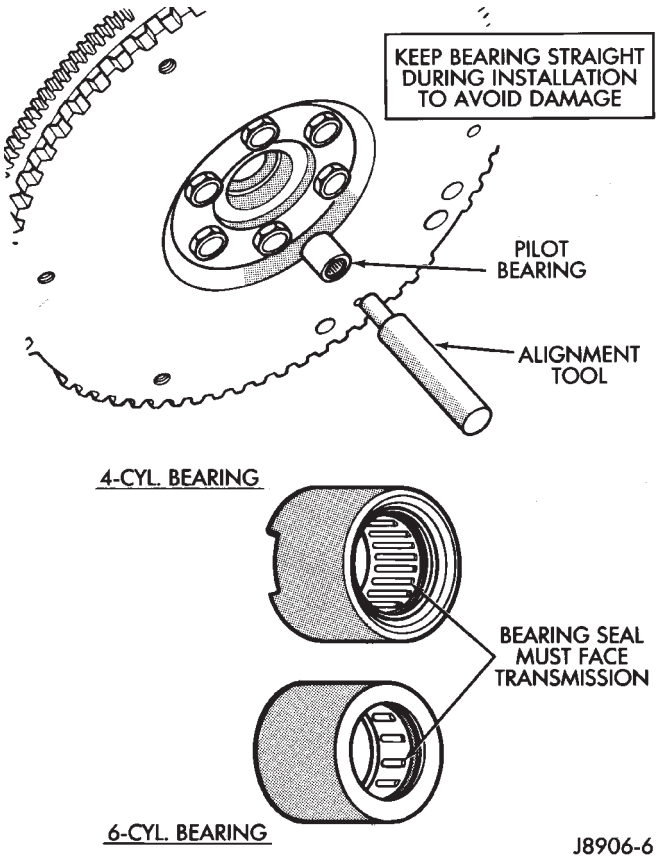

Fig. 7 Pilot Bearing Installation

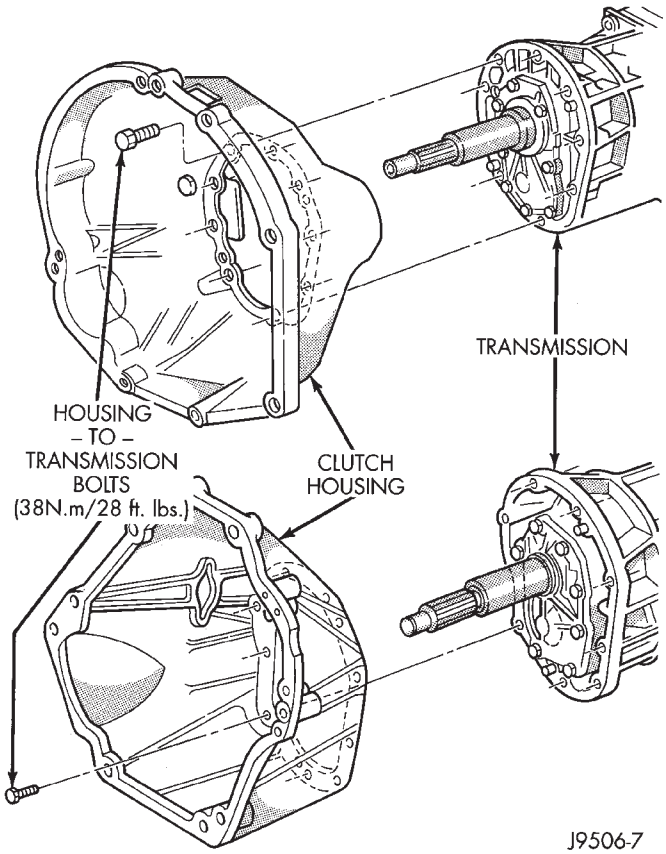

Fig. 8 Clutch Housing Attachment

(8) Install transmission. Refer to Group 21 for procedure.

CLUTCH HOUSING REPLACEMENT

The clutch housing is removable and can be replaced when the transmission is out of the vehicle.

The bolts attaching the housing to the transmission case are located inside the housing (Fig. 8). Recommended tightening torque for the clutch housing-to-transmission bolts is 38 N·m (28 ft. lbs.).

Be sure the transmission and housing mating surfaces are clean before installing an original, or replacement clutch housing. Dirt/foreign material trapped between the housing and transmission will cause misalignment. If misalignment is severe enough, the result will be clutch drag, incomplete release and hard shifting.

CLUTCH HYDRAULIC LINKAGE REMOVAL

The clutch master cylinder, slave cylinder and connecting line are serviced as an assembly only. The linkage components cannot be overhauled or serviced separately. The cylinders and connecting line are sealed units. Also note that removal/installation procedures for right and left hand drive models are basically the same. Only master cylinder location is different.

(1) Raise vehicle.

(2) Remove fasteners attaching slave cylinder to clutch housing.

(3) Remove slave cylinder from clutch housing (Fig. 9).

(4) Disengage clutch fluid line from body clips.

(5) Lower vehicle.

(6) Verify that cap on clutch master cylinder reservoir is tight. This is necessary to avoid undue spillage during removal.

(7) Remove clutch master cylinder attaching nuts. Note that one nut is accessible from engine compartment and one nut is accessible from under instrument panel (Figs. 10 and 11).

(8) Remove clip securing clutch master cylinder push rod to pedal and slide push rod off pedal pin.

(9) Disconnect clutch pedal position switch wires.

(10) If pedal pin is equipped with bushing, inspect condition of bushing and replace it if worn or damaged.

(11) Remove clutch hydraulic linkage through engine compartment.

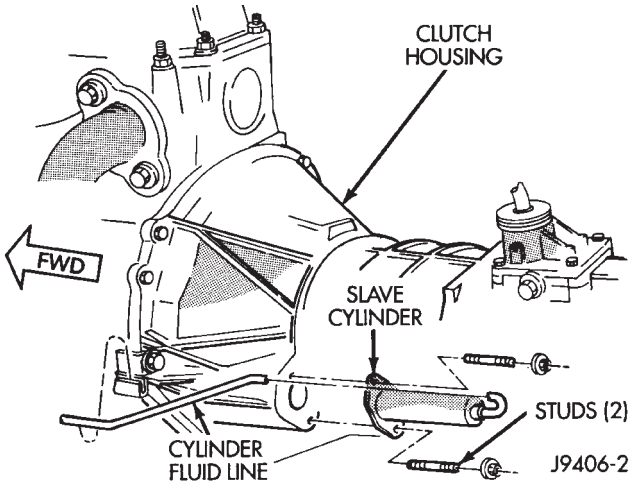

Fig. 9 Slave Cylinder Attachment

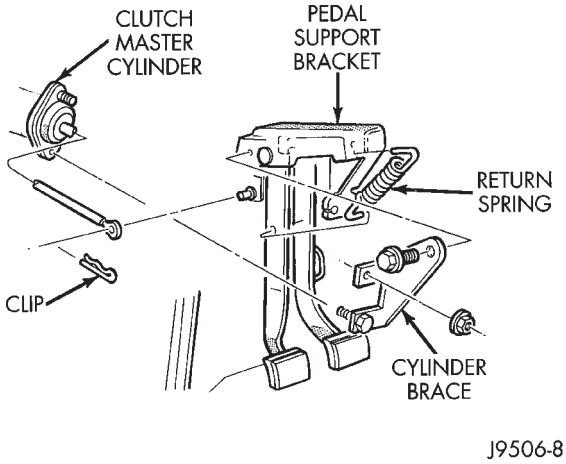

Fig. 10 Clutch Master Cylinder And Push Rod Attachment (Left Hand Drive Models)

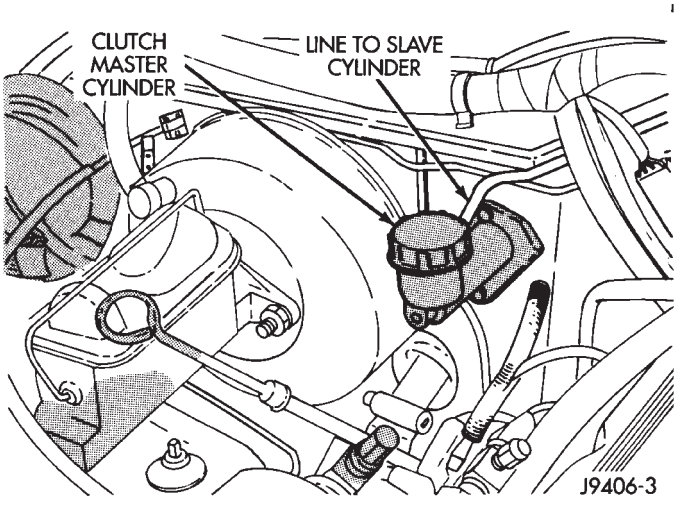

Fig. 11 Clutch Master Cylinder Location (Right Hand Drive Models)

CLUTCH HYDRAULIC LINKAGE INSTALLATION

(1) Be sure reservoir cover on clutch master cylinder is tight to avoid spills.

(2) Position clutch linkage components in vehicle. Work connecting line and slave cylinder downward past engine and adjacent to clutch housing.

(3) Position clutch master cylinder on dash panel (Fig. 12).

(4) Attach clutch master cylinder push rod to pin on clutch pedal. Secure rod with new clip if necessary.

(5) Install and tighten clutch master cylinder attaching nuts to 23-34 N·m (200-300 in. lbs.) torque.

(6) Raise vehicle.

(7) Insert slave cylinder push rod through clutch housing opening and into release lever. Be sure cap on end of rod is securely engaged in lever. Check this before installing cylinder attaching nuts.

(8) Install and tighten slave cylinder attaching nuts to 23-34 N·m (200-300 in. lbs.) torque.

(9) Secure clutch fluid line in body clips.

(10) Lower vehicle.

(11) Connect clutch pedal position switch wires.

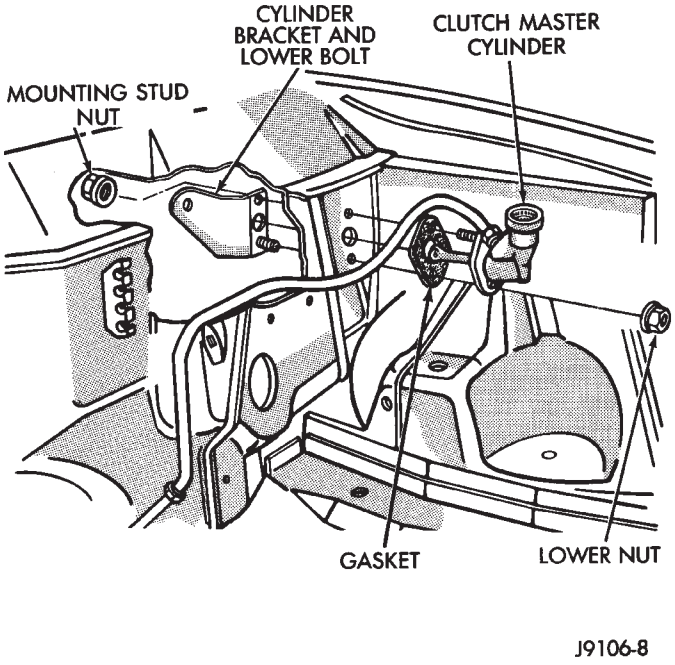

Fig. 12 Clutch Master Cylinder Mounting (Typical)

CLUTCH FLUID LEVEL

The clutch fluid reservoir, master cylinder, slave cylinder and fluid lines are prefilled with fluid at the factory during assembly operations.

The hydraulic system should not require additional fluid under normal circumstances. In fact, **the reservoir fluid level will actually increase as normal clutch wear occurs. For this reason, it is important to avoid overfilling, or removing fluid from the reservoir.**

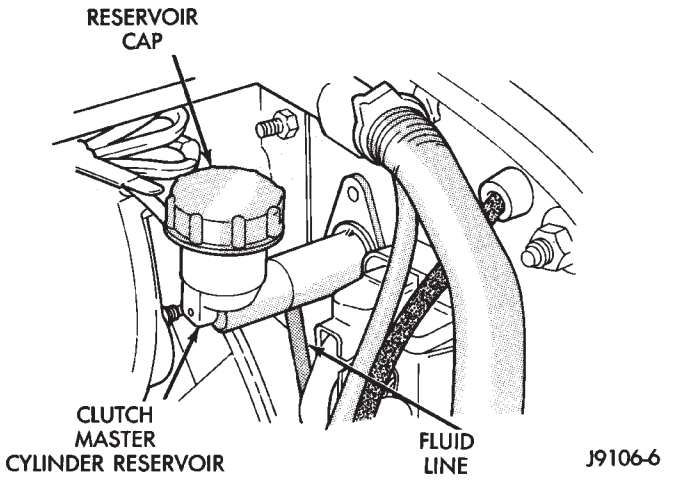

Fig. 13 Clutch Master Cylinder Reservoir And Cap

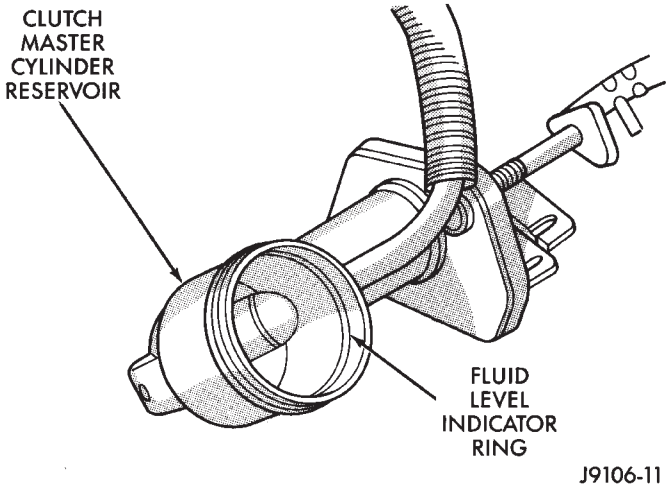

Fig. 14 Reservoir Fluid Level Indicator Ring

If inspection or diagnosis indicates additional fluid may be needed, use Mopar brake fluid, or an equivalent meeting standards SAE J1703 and DOT 3. Do not use any other type of fluid.

Clutch fluid level is checked at the master cylinder reservoir (Fig. 13). An indicator ring is provided either on the side, or interior rim of the reservoir (Fig. 14).

Be sure to wipe the reservoir and cover clean before removing the cover. This will avoid having dirt or foreign material fall into the reservoir during a fluid level check.

CLUTCH PEDAL REMOVAL

(1) Remove instrument panel lower trim cover for extra working clearance.

(2) Disconnect clutch pedal position switch wires.

(3) Remove retainer clip that attaches clutch master cylinder push rod to pedal.

(4) On YJ, remove retaining ring securing pedal to pivot shaft (Fig. 15). On XJ, remove nut securing pedal to pivot shaft (Fig. 16).

(5) Move pedal pivot shaft to right and slide pedal off shaft.

CLUTCH PEDAL INSTALLATION

(1) Lubricate clutch pedal pivot shaft and pedal bushings or sleeve with Mopar multi-mileage grease.

(2) Position pedal on pivot shaft and through brace. Secure pedal with washer and retaining ring on YJ, or with washer and nut on XJ.

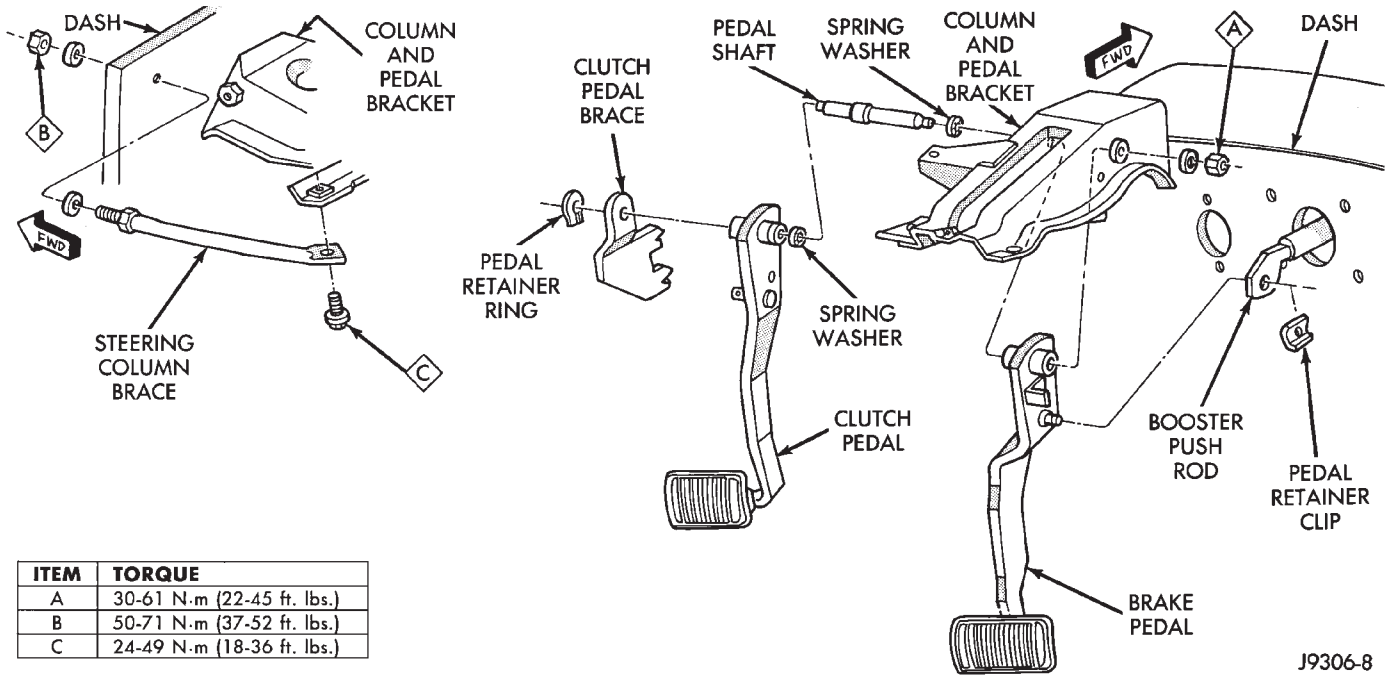

ITEM	TORQUE
A	30-61 N·m (22-45 ft. lbs.)
B	50-71 N·m (37-52 ft. lbs.)
C	24-49 N·m (18-36 ft. lbs.)

Fig. 15 Clutch Pedal Mounting (YJ)

(3) Install clutch master cylinder push rod on pedal. Secure rod with washer(s) and new cotter pin.

(4) Connect clutch pedal position switch wires.

(5) Install instrument panel lower trim cover, if removed.

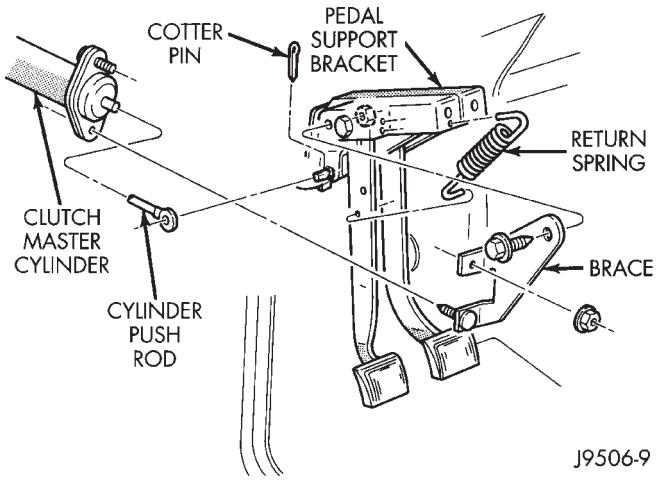

Fig. 16 Clutch Pedal Mounting (XJ)

FLYWHEEL SERVICE

Inspect the flywheel whenever the clutch disc, cover and housing are removed for service. Check condition of the flywheel face, hub, ring gear teeth, and flywheel bolts.

Minor scratches, burrs, or glazing on the flywheel face can be reduced with 180 grit emery cloth. However, the flywheel should be replaced if the disc contact surface is severely scored, heat checked, cracked, or obviously worn.

Flywheel machining is not recommended. The flywheel surface is manufactured with a unique contour that would be negated by machining. However, cleanup of minor flywheel scoring can be performed by hand with 180 grit emery, or with surface grinding equipment. Replace the flywheel if scoring is deeper than 0.0762 mm (0.003 in.).

Heavy stock removal by grinding is **not recommended.** Excessive stock removal can result in flywheel cracking or warpage after installation. It can also weaken the flywheel and interfere with proper clutch release.

Check flywheel runout if misalignment is suspected. Runout should not exceed 0.08 mm (0.003 in.). Measure runout at the outer edge of the flywheel face with a dial indicator. Mount the dial indicator on a stud installed in place of one of the flywheel attaching bolts.

Clean the crankshaft flange before mounting the flywheel. Dirt and grease on the flange surface may cock the flywheel causing excessive runout.

Check condition of the flywheel hub and attaching bolts. Replace the flywheel if the hub exhibits cracks in the area of the attaching bolt holes.

Install new attaching bolts whenever the flywheel is replaced and use Mopar Lock N' Seal, or Loctite 242 on the replacement bolt threads.

Recommended flywheel bolt torques are:

- 142 N·m (105 ft. lbs.) for 6-cylinder flywheels
- 68 N·m (50 ft. lbs.) plus an additional turn of 60° for 4-cylinder flywheels

Inspect the teeth on the starter ring gear. **If the teeth are worn or damaged, the flywheel should be replaced as an assembly. This is the recommended and preferred method of repair.**

In cases where a new flywheel is not readily available, a replacement ring gear can be installed. However, the following precautions must be observed to avoid damaging the flywheel and replacement gear.

(a) Mark position of the old gear for alignment reference on the flywheel. Use a scriber for this purpose.

(b) Wear protective goggles or approved safety glasses. Also wear heat resistent gloves when handling a heated ring gear.

(c) Remove the old gear by cutting most of the way through it (at one point) with an abrasive cut-off wheel. Then complete removal with a cold chisel or punch.

(d) The ring gear is a shrink fit on the flywheel. This means the gear must be expanded by heating in order to install it. **The method of heating and expanding the gear is extremely important.** Every surface of the gear must be heated at the same time to produce uniform expansion. An oven or similar enclosed heating device must be used. Temperature required for uniform expansion is approximately 375° F.

CAUTION: Do not use an oxy/acetylene torch to remove the old gear, or to heat and expand a new gear. The high temperature of the torch flame can cause localized heating that will damage the flywheel. In addition, using the torch to heat a replacement gear will cause uneven heating and expansion. The torch flame can also anneal the gear teeth resulting in rapid wear and damage after installation.

(e) The heated gear must be installed evenly to avoid misalignment or distortion. A shop press and suitable press plates should be used to install the gear if at all possible.

(f) Be sure to wear eye and hand protection. Heat resistent gloves and safety goggles are needed for personal safety. Also use metal tongs, vise grips, or similar tools to position the gear as necessary for installation.

(g) Allow the flywheel and ring gear to cool down before installation. Set the assembly on a workbench and let it cool in normal shop air.

CAUTION: Do not use water, or compressed air to cool the flywheel. The rapid cooling produced by water or compressed air can distort, or crack the gear and flywheel.

TORQUE SPECIFICATIONS

Item	Torque
Clutch Cover bolts:	
2.5L	31 N.m (23 ft. lbs.)
4.0L	52 N.m (38 ft. lbs.)
Clutch Cylinder Mounting Bolts/Nuts	23 N.m (200 in. lbs.)
Clutch Housing-To-Engine Bolts:	
M12 x 1.75	75 N.m (55 ft. lbs.)
3/8-16	37 N.m (27 ft. lbs.)
7/16-14	58 N.m (43 ft. lbs.)
Clutch Housing Dust Shield:	
M8 x 2.12 bolt	8 N.m (72 in. lbs.)
lower bolt and nut	50 N.m (37 ft. lbs.)
Clutch Housing-To-Transmission Bolt (AX 5/AX 15)	38 N.m (28 ft. lbs.)
Crossmember-To-Frame Bolt	41 N.m (30 ft. lbs.)
Flywheel Bolts:	
4.0L	142 N.m (105 ft. lbs)
2.5L	68 N.m (50 ft. lbs.) Plus additional turn of 60 degrees
Starter Motor Dowel Bolt	45 N.m (33 ft. lbs.)
U-joint Clamp Bolts	19 N.m (170 in. lbs.)
Rear Support-To-Crossmember Bolt	45 N.m (33 ft. lbs.)

J9506-10

COOLING SYSTEM

CONTENTS

	page		page
DIAGNOSIS	4	GENERAL INFORMATION	1
ENGINE ACCESSORY DRIVE BELTS	38	SERVICE PROCEDURES	13
ENGINE BLOCK HEATER	44	SPECIFICATIONS	45

GENERAL INFORMATION

Throughout this group, references are made to particular vehicle models by alphabetical designation (XJ or YJ) or by the particular vehicle nameplate. A chart showing a breakdown of alphabetical designations is included in the Introduction section at the beginning of this manual.

COOLING SYSTEM

The cooling system regulates engine operating temperature. It allows the engine to reach normal operating temperature as quickly as possible, maintains normal operating temperature and prevents overheating.

The cooling system also provides a means of heating the passenger compartment and cooling the automatic transmission fluid (if equipped). The cooling system is pressurized and uses a centrifugal water pump to circulate coolant throughout the system.

An optional factory installed heavy duty cooling package is available on most models. The package consists of a radiator that has an increased number of cooling fins. XJ models equipped with a 4.0L 6-cylinder engine and heavy duty cooling and/or air conditioning also have an auxiliary electric cooling fan.

COOLING SYSTEM COMPONENTS

The cooling system consists of:

- A radiator
- Cooling fan (mechanical and/or electrical)
- Thermal viscous fan drive
- Fan shroud
- Radiator pressure cap
- Thermostat
- Coolant reserve/overflow system
- Transmission oil cooler (if equipped with an automatic transmission)
- Coolant
- Water pump
- Hoses and hose clamps

SYSTEM COOLANT ROUTING

For cooling system flow routings, refer to Figs. 1, 2, 3 or 4.

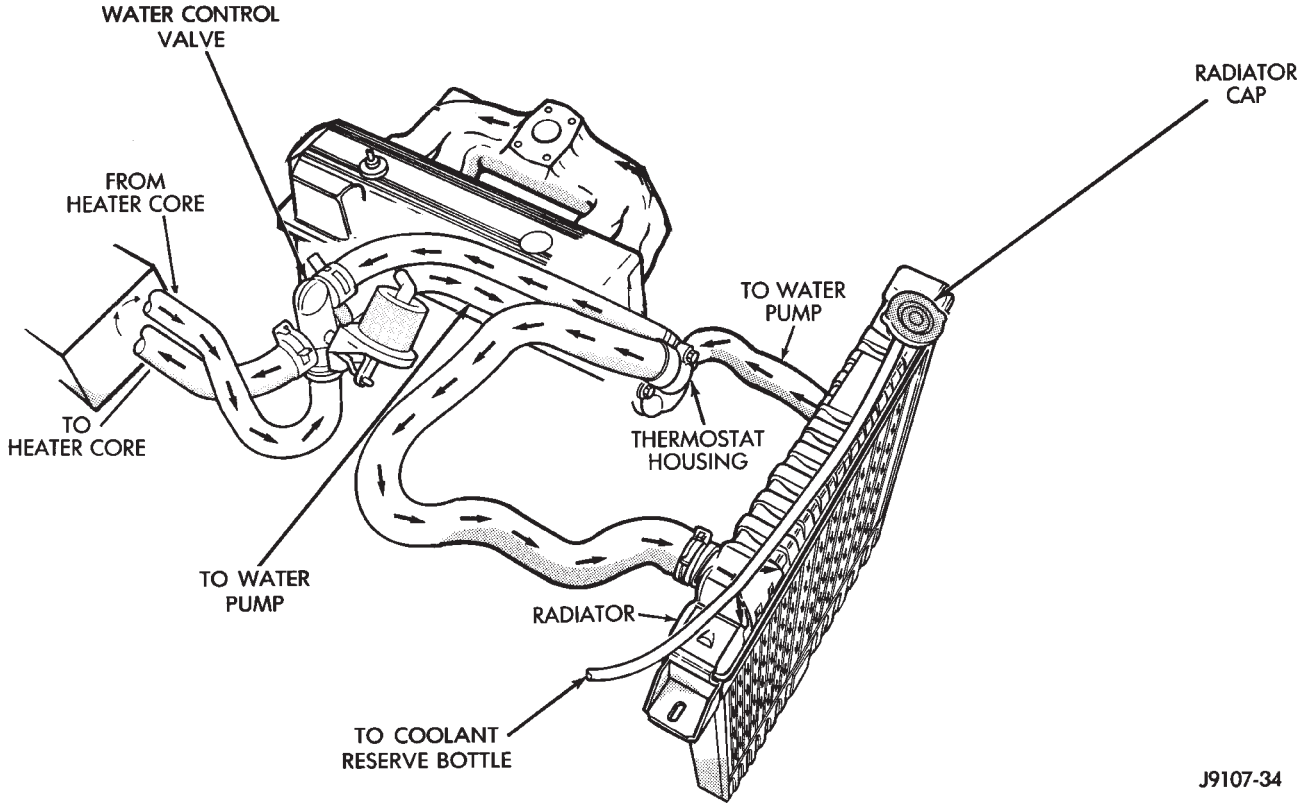

Fig. 1 Coolant Flow—XJ Models with 2.5L 4-Cylinder Engine—Typical

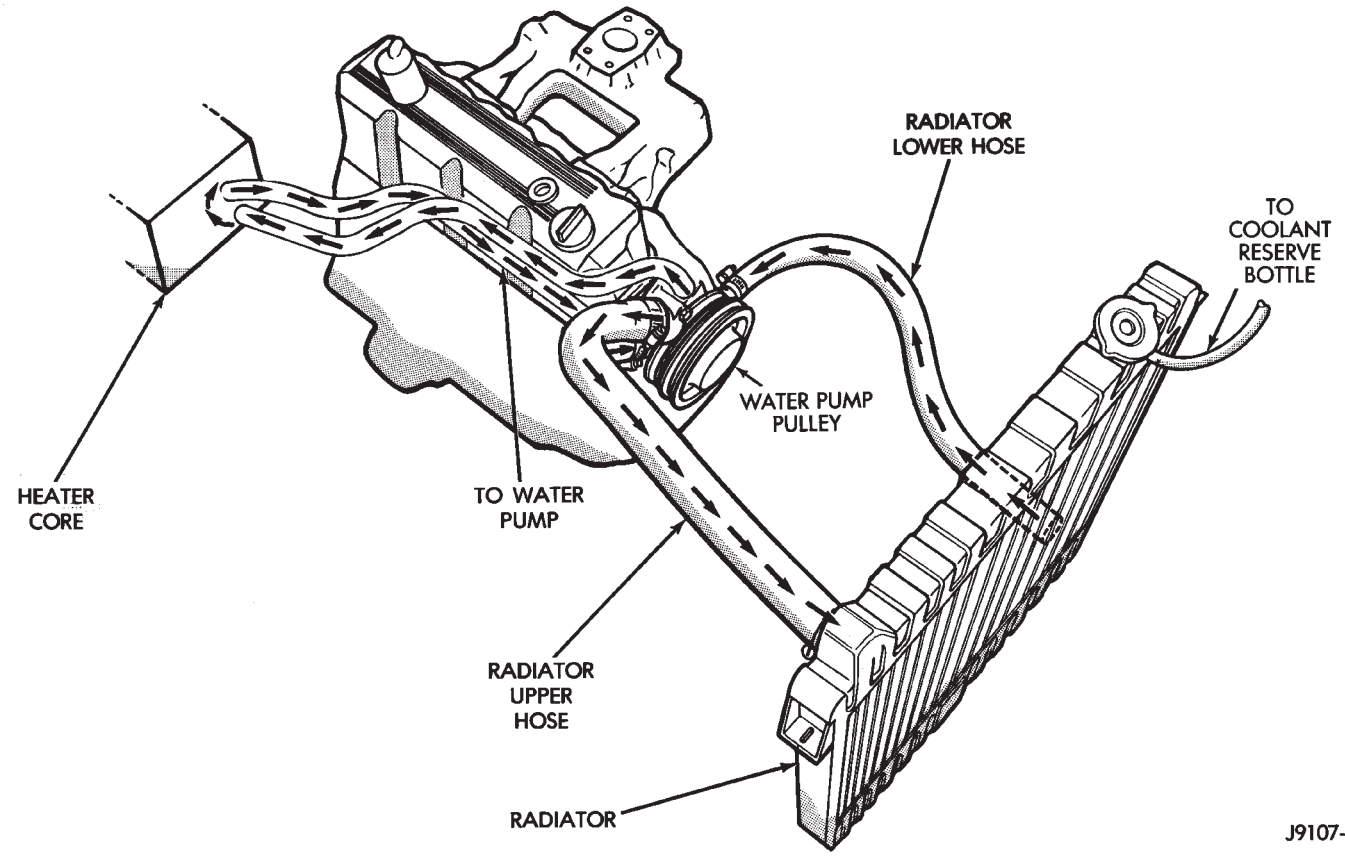

Fig. 2 Coolant Flow—YJ Models with 2.5L 4-Cylinder Engine—Typical

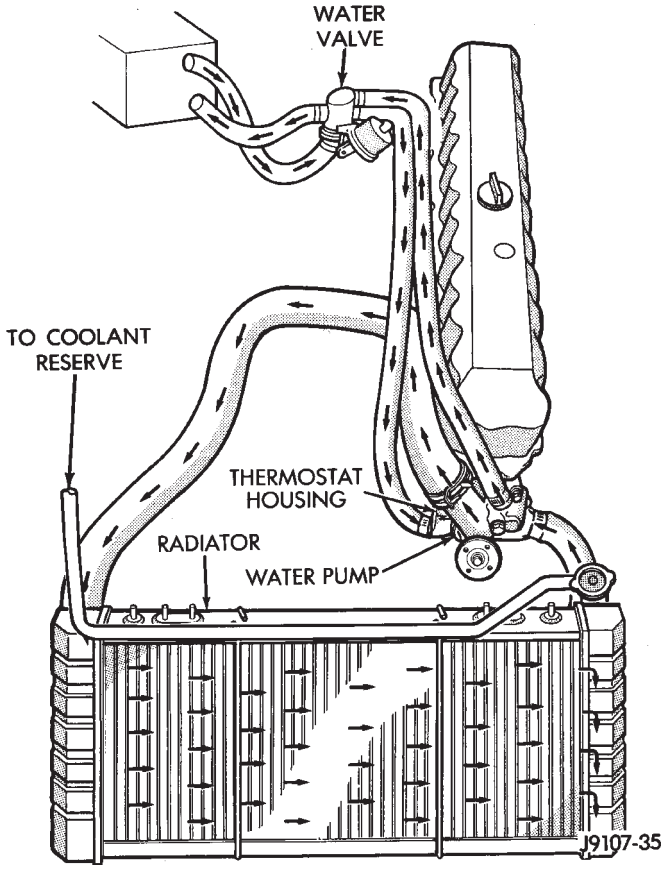

Fig. 3 Coolant Flow—XJ Models with 4.0L 6-Cylinder Engine—Typical

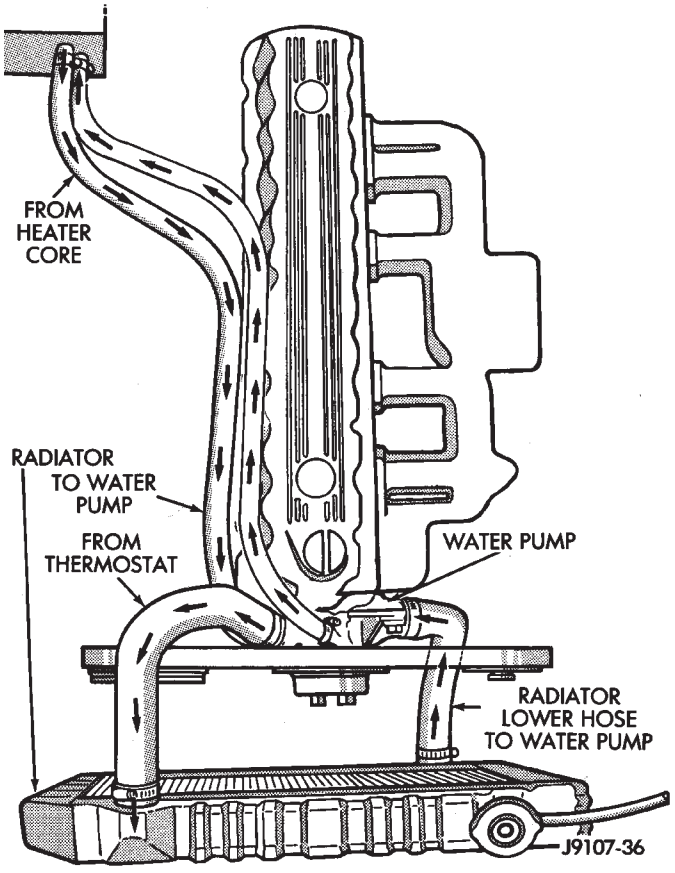

Fig. 4 Coolant Flow—YJ Models with 4.0L 6-Cylinder Engine—Typical

DIAGNOSIS

INDEX

page

DRB Scan Tool 5
On-Board Diagnostics (OBD) 4
Preliminary Checks 5

ON-BOARD DIAGNOSTICS (OBD)

FOR CERTAIN COOLING SYSTEM COMPONENTS

The powertrain control module (PCM) has been programmed to monitor the certain following cooling system components:

- If the engine has remained cool for too long a period, such as with a stuck open thermostat, a Diagnostic Trouble Code (DTC) number 17 can be observed at the malfunction indicator lamp. This lamp is displayed on the instrument panel as the CHECK ENGINE lamp (Figs. 5 or 6).
- If an open or shorted condition has developed in the relay circuit controlling the electric radiator fan, a Diagnostic Trouble Code (DTC) number 35 can be observed at the CHECK ENGINE lamp (XJ models only).

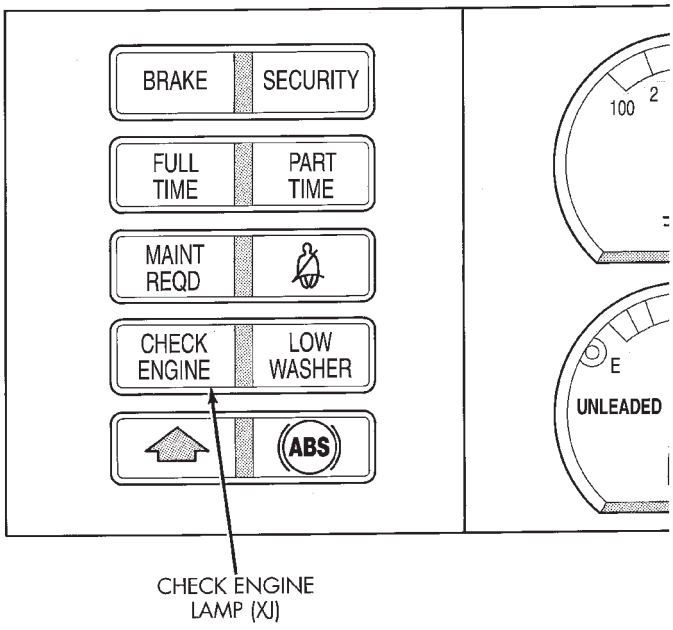

Fig. 5 Check Engine Lamp—XJ Models—Typical

If the problem is sensed in a monitored circuit often enough to indicate an actual problem, a DTC is stored. The DTC will be stored in the PCM memory for eventual display to the service technician. If the problem is repaired or ceases to exist, the PCM cancels the DTC after 51 engine starts.

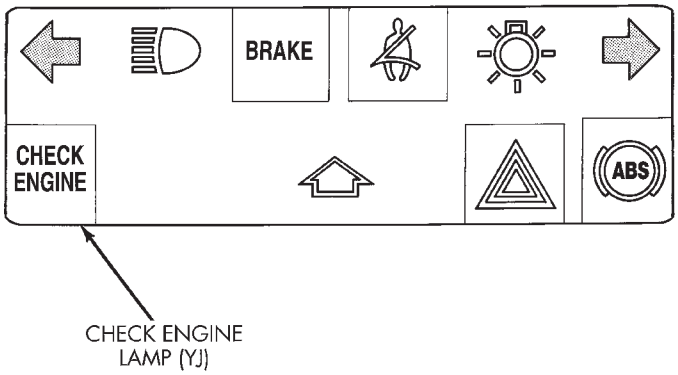

Fig. 6 Check Engine Lamp—YJ Models—Typical

Certain criteria must be met for a DTC to be entered into PCM memory. The criteria may be a specific range of engine rpm, engine temperature and/or input voltage to the PCM.

A DTC indicates that the PCM has recognized an abnormal signal in a circuit or the system. A DTC may indicate the result of a failure, but never identify the failed component directly.

It is possible that a DTC for a monitored circuit may not be entered into memory even though a malfunction has occurred. Refer to On-Board Diagnostics (OBD) in Group 14, Fuel Systems for additional DTC information.

ACCESSING DIAGNOSTIC TROUBLE CODES

A stored Diagnostic Trouble Code (DTC) can be displayed by cycling the ignition key On-Off-On-Off-On within three seconds and observing the malfunction indicator lamp. This lamp is displayed on the instrument panel as the CHECK ENGINE lamp (Figs. 5 or 6).

They can also be displayed through the use of the Diagnostic Readout Box (DRB) scan tool. The DRB connects to the data link connector in the engine compartment (Figs. 7 or 8). For operation of the DRB, refer to the appropriate Powertrain Diagnostic Procedures service manual.

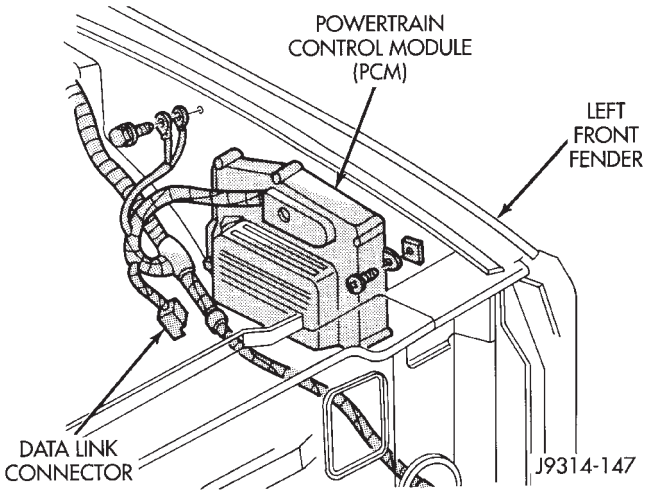

Fig. 7 Data Link Connector—XJ Models—Typical

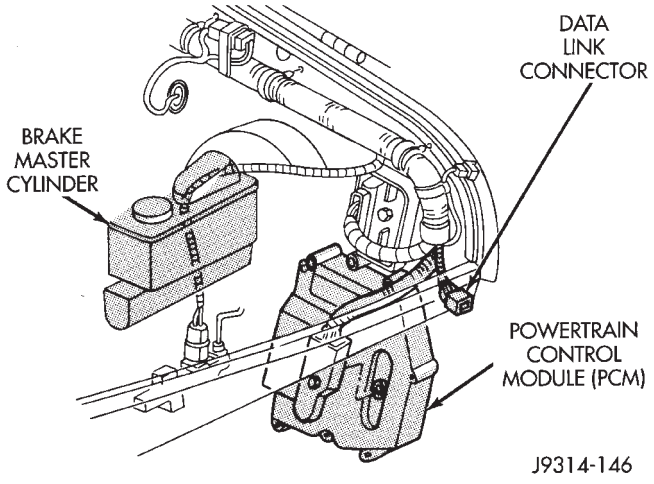

Fig. 8 Data Link Connector—YJ Models—Typical

EXAMPLES:

• If the lamp (Figs. 5 or 6) flashes 1 time, pauses and flashes 2 more times, a flashing Diagnostic Trouble Code (DTC) number 12 is indicated. If this code is observed, it is indicating that the battery has been disconnected within the last 50 key-on cycles. It could also indicate that battery voltage has been disconnected to the PCM. In either case, other DTC's may have been erased.

• If the lamp flashes 1 time, pauses and flashes 7 more times, a flashing Diagnostic Trouble Code (DTC) number 17 is indicated.

• If the lamp flashes 3 times, pauses and flashes 5 more times, a flashing Diagnostic Trouble Code (DTC) number 35 is indicated.

After any stored DTC information has been observed, the display will end with a flashing DTC number 55. This will indicate the end of all stored information.

ERASING TROUBLE CODES

After the problem has been repaired, the DRB scan tool must be used to erase a DTC. Refer to the appropriate Powertrain Diagnostic Procedures service manual for operation of the DRB scan tool.

DRB SCAN TOOL

For operation of the DRB scan tool, refer to the appropriate Powertrain Diagnostic Procedures service manual.

PRELIMINARY CHECKS

ENGINE COOLING SYSTEM OVERHEATING

Establish what driving conditions caused the complaint. Abnormal loads on the cooling system such as the following may be the cause.

1. PROLONGED IDLE, VERY HIGH AMBIENT TEMPERATURE, SLIGHT TAIL WIND AT IDLE, SLOW TRAFFIC, TRAFFIC JAMS, HIGH SPEED, OR STEEP GRADES:

Driving techniques that avoid overheating are:

• Idle with A/C off when temperature gauge is at end of normal range.

• Increasing engine speed for more air flow is recommended.

2. TRAILER TOWING:

Consult Trailer Towing section of owners manual. Do not exceed limits.

3. AIR CONDITIONING; ADD-ON OR AFTER MARKET:

A maximum cooling package should have been ordered with vehicle if add-on or after market A/C is installed. If not, maximum cooling system components should be installed for model involved per manufacturer's specifications.

4. RECENT SERVICE OR ACCIDENT REPAIR:

Determine if any recent service has been performed on vehicle that may effect cooling system. This may be:

• Engine adjustments (incorrect timing)

• Slipping engine accessory drive belt(s)

• Brakes (possibly dragging)

• Changed parts (incorrect water pump rotating in wrong direction)

• Reconditioned radiator or cooling system refilling (possibly under-filled or air trapped in system).

If investigation reveals none of the previous items as a cause for an engine overheating complaint, refer to following Cooling System Diagnosis charts.

These charts are to be used as a quick-reference only. Refer to the group text for information.

COOLING SYSTEM DIAGNOSIS

CONDITION	POSSIBLE CAUSES	CORRECTION
TEMPERATURE GAUGE READS LOW	1. Has a Diagnostic Trouble Code (DTC) number 17 been set indicating a stuck open engine thermostat?	1. Refer to On-Board Diagnostics in the service manual text. Replace thermostat if necessary. If a Diagnostic Trouble Code (DTC) number 17 has not been set, the problem may be with the temperature gauge.
	2. Is the temperature gauge (if equipped) connected to the temperature gauge coolant sensor on the engine?	2. Check the engine temperature sensor connector in the engine compartment. Refer to Group 8E. Repair as necessary.
	3. Is the temperature gauge (if equipped) operating OK?	3. Check gauge operation. Refer to Group 8E. Repair as necessary.
	4. Coolant level low in cold ambient temperatures accompanied with poor heater performance.	4. Check coolant level in the coolant reserve/overflow tank and the radiator. Inspect system for leaks. Repair leaks as necessary. Refer to the Coolant section of the manual text for WARNINGS and precautions before removing the radiator cap.
	5. Improper operation of internal heater doors or heater controls.	5. Inspect heater and repair as necessary. Refer to Group 24, Heating and Air Conditioning for procedures.
TEMPERATURE GAUGE READS HIGH OR ENGINE COOLANT WARNING LAMP ILLUMINATES. COOLANT MAY OR MAY NOT BE LOST OR LEAKING FROM COOLING SYSTEM	1. Trailer is being towed, a steep hill is being climbed, vehicle is operated in slow moving traffic, or engine is being idled with very high ambient (outside) temperatures and the air conditioning is on. Higher altitudes could aggravate these conditions.	1. This may be a temporary condition and repair is not necessary. Turn off the air conditioning and attempt to drive the vehicle without any of the previous conditions. Observe the temperature gauge. The gauge should return to the normal range. If the gauge does not return to normal range, determine the cause for overheating and repair. Refer to POSSIBLE CAUSES (numbers 2 through 20).
	2. Is temperature gauge (if equipped) reading correctly?	2. Check gauge. Refer to Group 8E. Repair as necessary.
	3. Is temperature warning lamp (if equipped) illuminating unnecessarily?	3. Check warning lamp operation. Refer to Group 8E. Repair as necessary.
	4. Coolant low in coolant reserve/overflow tank and radiator?	4. Check for coolant leaks and repair as necessary. Refer to Testing Cooling System For Leaks in this group.
	5. Pressure cap not installed tightly. If cap is loose, boiling point of coolant will be lowered. Also refer to the following step 6.	5. Tighten cap.
	6. Poor seals at radiator cap.	6. (a) Check condition of cap and cap seals. Refer to Radiator Cap. Replace cap if necessary. (b) Check condition of radiator filler neck. If neck is bent or damaged, replace radiator.

J9507-28

COOLING SYSTEM DIAGNOSIS (CONT.)

CONDITION	POSSIBLE CAUSES	CORRECTION
TEMPERATURE GAUGE READS HIGH OR ENGINE COOLANT WARNING LAMP ILLUMINATES. COOLANT MAY OR MAY NOT BE LOST OR LEAKING FROM COOLING SYSTEM - CONT.	7. Coolant level low in radiator but not in coolant reserve/overflow tank. This means the radiator is not drawing coolant from the coolant reserve/overflow tank as the engine cools. As the engine cools, a vacuum is formed in the cooling system of the engine and radiator. If radiator cap seals are defective, or cooling system has leaks, a vacuum can not be formed.	7. (a) Check condition of radiator cap and cap seals. Refer to Radiator Cap in this group. Replace cap if necessary. (b) Check condition of radiator filler neck. If neck is bent or damaged, replace radiator. (c) Check the condition of the hose from the radiator to the coolant tank. It should fit tight at both ends without any kinks or tears. Replace hose if necessary. (d) Check coolant reserve/overflow tank and tank hoses for blockage. Repair as necessary.
	8. Freeze point of antifreeze not correct. Mixture may be too rich.	8. Check antifreeze. Refer to Coolant section of this group. Adjust antifreeze-to-water ratio as required.
	9. Coolant not flowing through system.	9. Check for coolant flow at radiator filler neck with some coolant removed, engine warm and thermostat open. Coolant should be observed flowing through radiator. If flow is not observed, determine reason for lack of flow and repair as necessary.
	10. Radiator or A/C condenser fins are dirty or clogged.	10. Clean insects or debris. Refer to Radiator Cleaning in this group.
	11. Radiator core is corroded or plugged.	11. Have radiator re-cored or replaced.
	12. Aftermarket A/C installed without proper radiator.	12. Install proper radiator.
	13. Fuel or ignition system problems.	13. Refer to Fuel and Ignition System groups for diagnosis. Also refer to the appropriate Powertrain Diagnostic Procedures service manual for operation of the DRB scan tool.
	14. Dragging brakes.	14. Check and correct as necessary. Refer to Group 5, Brakes in the manual text.
	15. Bug screen is being used reducing airflow.	15. Remove bug screen.
	16. Thermostat partially or completely shut. This is more prevalent on high mileage vehicles.	16. Check thermostat operation and replace as necessary. Refer to Thermostats in this group.
	17. Thermal viscous fan drive not operating properly.	17. Check fan drive operation and replace if necessary. Refer to Viscous Fan Drive in this group.
	18. Electric cooling fan not operating properly (XJ models with 4.0L engine equipped with heavy duty cooling and/or air conditioning).	18. Check electric fan operation and repair as necessary. Refer to Auxiliary Electric Cooling Fan-XJ Models With 4.0L 6-cylinder Engine in the manual text.

J9507-29

COOLING SYSTEM DIAGNOSIS (CONT.)

CONDITION	POSSIBLE CAUSES	CORRECTION
TEMPERATURE GAUGE READS HIGH OR ENGINE COOLANT WARNING LAMP ILLUMINATES. COOLANT MAY OR MAY NOT BE LOST OR LEAKING FROM COOLING SYSTEM - CONT.	19. Cylinder head gasket leaking. 20. Heater core leaking.	19. Check for cylinder head gasket leaks. Refer to Testing Cooling System For Leaks in this group. For repair, refer to Group 9, Engines. 20. Check heater core for leaks. Refer to Group 24, Heating and Air Conditioning. Repair as necessary.
TEMPERATURE GAUGE READING IS INCONSISTENT (FLUCTUATES, CYCLES OR IS ERRATIC)	1. On XJ models equipped with a 4.0L 6-cylinder engine, heavy duty cooling and/or air conditioning, the gauge may cycle up and down. This is due to the cycling of the electric radiator fan. 2. During cold weather operation, with the heater blower in the high position, the gauge reading may drop slightly. 3. Temperature gauge or engine mounted gauge sensor defective or shorted. Also, corroded or loose wiring in this circuit. 4. Gauge reading rises when vehicle is brought to a stop after heavy use (engine still running). 5. Gauge reading high after re-starting a warmed-up (hot) engine. 6. Coolant level low in radiator (air will build up in the cooling system causing the thermostat to open late). 7. Cylinder head gasket leaking allowing exhaust gas to enter cooling system causing thermostat to open late. 8. Water pump impeller loose on shaft. 9. Loose accessory drive belt (water pump slipping). 10. Air leak on the suction side of water pump allows air to build up in cooling system causing thermostat to open late.	1. A normal condition. No correction is necessary. If gauge cycling is going into the hot zone, check electric fan operation and repair as necessary. Refer to Auxiliary Electric Cooling Fan-XJ Models With 4.0L 6-Cylinder Engine in the manual text. 2. A normal condition. No correction is necessary. 3. Check operation of gauge and repair if necessary. Refer to Group 8E, Instrument Panel And Gauges. 4. A normal condition. No correction is necessary. Gauge reading should return to normal range after vehicle is driven. 5. A normal condition. No correction is necessary. The gauge should return to normal range after a few minutes of engine operation. 6. Check and correct coolant leaks. Refer to Testing Cooling System For Leaks in this group. 7. (a) Check for cylinder head gasket leaks with a commercially available Block Leak Tester. Repair as necessary. (b) Check for coolant in the engine oil. Inspect for white steam emitting from exhaust system. Repair as necessary. 8. Check water pump and replace as necessary. Refer to Water Pumps in this group. 9. Refer to Engine Accessory Drive Belts in this group. Check and correct as necessary. 10. Locate leak and repair as necessary.

COOLING SYSTEM DIAGNOSIS (CONT.)

CONDITION	POSSIBLE CAUSES	CORRECTION
PRESSURE CAP IS BLOWING OFF STEAM AND/OR COOLANT TO COOLANT TANK. TEMPERATURE GAUGE READING MAY BE ABOVE NORMAL BUT NOT HIGH. COOLANT LEVEL MAY BE HIGH IN COOLANT RESERVE/OVERFLOW TANK	1. Pressure relief valve in radiator cap is defective.	1. Check condition of radiator cap and cap seals. Refer to Radiator Caps in this group. Replace cap as necessary.
COOLANT LOSS TO THE GROUND WITHOUT PRESSURE CAP BLOWOFF. GAUGE IS READING HIGH OR HOT	1. Coolant leaks in radiator, cooling system hoses, water pump or engine.	1. Pressure test and repair as necessary. Refer to Testing Cooling System For Leaks in this group.
DETONATION OR PRE-IGNITION (NOT CAUSED BY IGNITION SYSTEM). GAUGE MAY OR MAY NOT BE READING HIGH	1. Engine overheating. 2. Freeze point of antifreeze not correct. Mixture is too rich or too lean.	1. Check reason for overheating and repair as necessary. 2. Check antifreeze. Refer to the Coolant section of this group. Adjust antifreeze-to-water ratio as required.
HOSE OR HOSES COLLAPSE WHEN ENGINE IS COOLING	1. Vacuum created in cooling system on engine cool-down is not being relieved through coolant reserve/overflow system.	1. (a) Radiator cap relief valve stuck. Refer to Radiator Cap in this group. Replace if necessary. (b) Hose between coolant reserve/overflow tank and radiator is kinked. Repair as necessary. (c) Vent at coolant reserve/overflow tank is plugged. Clean vent and repair as necessary. (d) Reserve/overflow tank is internally blocked or plugged. Check for blockage and repair as necessary.
ELECTRIC RADIATOR FAN RUNS ALL THE TIME (XJ MODELS WITH 4.0L ENGINE EQUIPPED WITH HEAVY DUTY COOLING AND/OR AIR CONDITIONING ONLY)	1. Fan relay, powertrain control module (PCM) or engine coolant temperature sensor defective.	1. Refer to Auxiliary Electric Cooling Fan-XJ Models With 4.0L 6 Cylinder Engine in the manual text. Repair as necessary. Also refer to the appropriate Powertrain Diagnostic Procedures service manual for operation of the DRB scan tool.
ELECTRIC RADIATOR FAN WILL NOT RUN (XJ MODELS WITH 4.0L ENGINE EQUIPPED WITH HEAVY DUTY COOLING AND/OR AIR CONDITIONING ONLY) GAUGE READING HIGH OR HOT	1. Fan motor defective. 2. Fan relay, powertrain control module (PCM) or engine coolant temperature sensor defective. 3. Blown fuse in power distribution center (PDC).	1. Refer to Auxiliary Electric Cooling Fan-XJ Models With 4.0L 6 Cylinder Engine in the manual text. Repair as necessary. 2. Refer to Auxiliary Electric Cooling Fan-XJ Models With 4.0L 6 Cylinder Engine in the manual text. Repair as necessary. Also refer to the appropriate Powertrain Diagnostic Procedures service manual for operation of the DRB scan tool. 3. Determine reason for blown fuse and repair as necessary.

COOLING SYSTEM DIAGNOSIS (CONT.)

CONDITION	POSSIBLE CAUSES	CORRECTION
NOISY FAN	1. Fan blades loose. 2. Fan blades striking a surrounding object. 3. Air obstructions at radiator or air conditioning condenser. 4. Electric fan motor defective (if equipped). 5. Thermal viscous fan drive has defective bearing. 6. A certain amount of fan noise (roaring) may be evident on models equipped with a thermal viscous fan drive. Some of this noise is normal.	1. Replace fan blade assembly. Refer to Cooling System Fans in this group. 2. Locate point of fan blade contact and repair as necessary. 3. Remove obstructions and/or clean debris or insects from radiator or A/C condenser. 4. Replace electric fan motor. Refer to Auxiliary Electric Cooling Fan-XJ Models With 4.0L 6 Cylinder Engine in the manual text. 5. Replace fan drive. Bearing is not serviceable. Refer to Viscous Fan Drive in this group. 6. Refer to Viscous Fan Drive in this group for an explanation of normal fan noise.
INADEQUATE AIR CONDITIONER PERFORMANCE (COOLING SYSTEM SUSPECTED)	1. Radiator and/or A/C condenser is restricted, obstructed or dirty (insects, leaves etc.). 2. Electric radiator fan not operating when A/C is operated (if equipped with electric fan). 3. Thermal viscous fan drive is free-wheeling. 4. Engine is overheating (heat may be transferred from radiator to A/C condenser. High underhood temperatures due to engine overheating may also transfer heat to A/C components). 5. Some models with certain engines are equipped with air seals at the radiator and/or A/C condenser. If these seals are missing or damaged, not enough air flow will be pulled through the radiator and A/C condenser.	1. Remove restriction and/or clean as necessary. Refer to Radiator Cleaning in this group. 2. Refer to Auxiliary Electric Cooling Fan-XJ Models With 4.0L 6 Cylinder Engine in the manual text. Repair as necessary. 3. Refer to Viscous Fan Drive for diagnosis. Repair as necessary. 4. Correct overheating condition. Refer to text in Group 7, Cooling. 5. Check for missing or damaged air seals and repair as necessary.
INADEQUATE HEATER PERFORMANCE. THERMOSTAT FAILED IN OPEN POSITION	1. Has a diagnostic trouble code (DTC) number 17 been set? 2. Coolant level low. 3. Obstructions in heater hose fittings at engine. 4. Heater hose kinked.	1. Refer to On-Board Diagnostics in the manual text and replace thermostat if necessary. 2. Refer to Testing Cooling System For Leaks in the manual text. Repair as necessary. 3. Remove heater hoses at both ends and check for obstructions. Repair as necessary. 4. Locate kinked area and repair as necessary.

J9507-32

COOLING SYSTEM DIAGNOSIS (CONT.)

CONDITION	POSSIBLE CAUSES	CORRECTION
INADEQUATE HEATER PERFORMANCE. THERMOSTAT FAILED IN OPEN POSITION - CONT.	5. Some models with certain engines are equipped with a water control valve located on one of the heater hoses. This valve may be defective. 6. Water pump is not pumping water to heater core. When the engine is fully warmed up, both heater hoses should be hot to the touch. If only one of the hoses is hot, the water pump may not be operating correctly. The accessory drive belt may also be slipping causing poor water pump operation.	5. Refer to Group 24, Heating and Air Conditioning for diagnosis. Repair as necessary. 6. Refer to Water Pumps in this group. Repair as necessary. If a slipping belt is detected, refer to Engine Accessory Drive Belts in this group. Repair as necessary.
HEAT ODOR	1. Various heat shields are used at certain drive line components. One or more of these shields may be missing. 2. Is temperature gauge reading above the normal range? 3. Is cooling fan operating correctly? 4. Has undercoating been applied to any unnecessary component? 5. Engine may be running rich causing the catalytic convertor to overheat.	1. Locate missing shields and replace or repair as necessary. 2. Refer to the previous Temperature Gauge Reads High in these Diagnosis Charts. Repair as necessary. 3. Refer to Cooling System Fan in this group for diagnosis. Repair as necessary. 4. Clean undercoating as necessary. 5. Refer to the DRB scan tool and the appropriate Powertrain Diagnostic Procedures service manual. Repair as necessary.
POOR DRIVEABILITY (THERMOSTAT POSSIBLY STUCK OPEN). GAUGE MAY BE READING LOW	1. For proper driveability, good vehicle emissions and for preventing build-up of engine oil sludge, the thermostat must be operating properly. Has a diagnostic trouble code (DTC) number 17 been set?	1. Refer to On-Board Diagnostics in this group. DTC's may also be checked using the DRB scan tool. Refer to the proper Powertrain Diagnostics Procedures service manual for checking the thermostat using the DRB scan tool. Replace thermostat if necessary.
STEAM IS COMING FROM FRONT OF VEHICLE NEAR GRILL AREA WHEN WEATHER IS WET, ENGINE IS WARMED UP AND RUNNING, AND VEHICLE IS STATIONARY. TEMPERATURE GAUGE IS IN NORMAL RANGE	1. During wet weather, moisture (snow, ice or rain condensation) on the radiator will evaporate when the thermostat opens. This opening allows heated water into the radiator. When the moisture contacts the hot radiator, steam may be emitted. This usually occurs in cold weather with no fan or airflow to blow it away.	1. Occasional steam emitting from this area is normal. No repair is necessary.

COOLING SYSTEM DIAGNOSIS (CONT.)

CONDITION	POSSIBLE CAUSES	CORRECTION
COOLANT COLOR	1. Coolant color is not necessarily an indication of adequate corrosion or temperature protection. Do not rely on coolant color for determining condition of coolant.	1. Refer to Coolant in this group for antifreeze tests. Adjust antifreeze-to-water ratio as necessary.
COOLANT LEVEL CHANGES IN COOLANT RESERVE/OVERFLOW TANK. TEMPERATURE GAUGE IS IN NORMAL RANGE	1. Level changes are to be expected as coolant volume fluctuates with engine temperature. If the level in the tank was between the FULL and ADD marks at normal engine operating temperature, the level should return to within that range after operation at elevated temperatures.	1. A normal condition. No repair is necessary.

SERVICE PROCEDURES

INDEX

	page
Auxiliary Electric Cooling Fan—XJ Models with 4.0L 6-Cylinder Engine	35
Coolant	20
Coolant Reserve/Overflow System	24
Cooling System Cleaning/Reverse Flushing	22
Cooling System Fans	32
Cooling System Hoses	32
Draining Cooling System	21
Radiator Pressure Cap	25
Radiators	26
Refilling Cooling System	21
Testing Cooling System for Leaks	22
Thermostat	17
Transmission Oil Coolers	36
Viscous Fan Drive	34
Water Pump Tests	13
Water Pumps—General Information	13
Water Pumps—Removal/Installation	14

WATER PUMPS—GENERAL INFORMATION

A centrifugal water pump circulates coolant through the water jackets, passages, intake manifold, radiator core, cooling system hoses and heater core. The pump is driven from the engine crankshaft by a drive belt on all engines.

The water pump impeller is pressed onto the rear of a shaft that rotates in bearings pressed into the housing. The housing has a small hole to allow seepage to escape. The water pump seals are lubricated by the antifreeze in the coolant mixture. No additional lubrication is necessary.

CAUTION: All engines are equipped with a reverse (counter-clockwise) rotating water pump and viscous fan drive assembly. REVERSE is stamped or imprinted on the cover of the viscous fan drive and inner side of the fan. The letter R is stamped into the back of the water pump impeller (Fig. 1).

Engines from previous model years, depending upon application, may have been equipped with a forward (clockwise) rotating water pump. Installation of the wrong water pump will cause engine overheating.

A quick test to determine if the pump is working is to check if the heater warms properly. A defective water pump will not be able to circulate heated coolant through the long heater hose to the heater core.

WATER PUMP TESTS

LOOSE IMPELLER

DO NOT WASTE reusable coolant. If solution is clean, drain coolant into a clean container for reuse.

WARNING: DO NOT REMOVE THE CYLINDER BLOCK DRAIN PLUGS OR LOOSEN THE RADIATOR DRAINCOCK WITH THE SYSTEM HOT AND UNDER PRESSURE. SERIOUS BURNS FROM THE COOLANT CAN OCCUR.

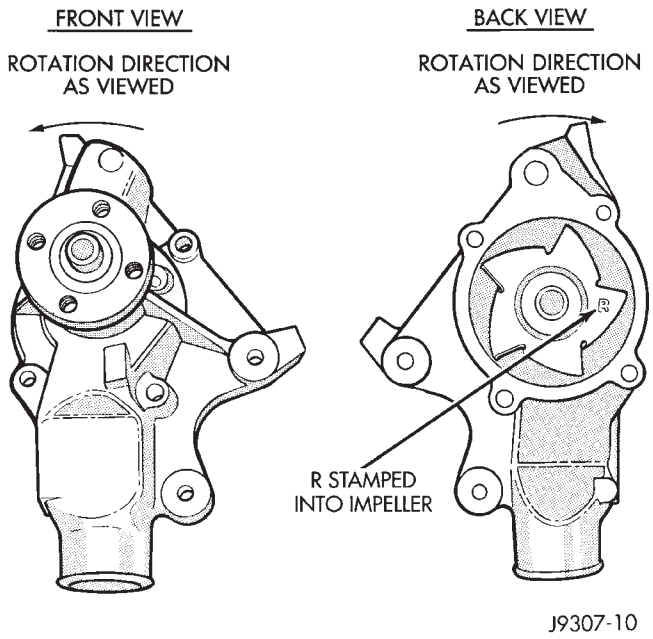

Fig. 1 Reverse Rotating Water Pump—Typical

(1) Drain the cooling system.

(2) Loosen the fan belt(s).

(3) Disconnect the lower radiator hose from the water pump.

(4) Bend a stiff clothes hanger or welding rod as shown in (Fig. 2).

(5) Position the rod in the water pump inlet and attempt to hold the impeller while turning the fan blades. If equipped with a viscous fan drive, turn the water pump shaft with a breaker bar and socket attached to a mounting flange nut. If the impeller is loose and can be held with the rod while the fan blades are turning, the pump is defective. If the impeller turns, the pump is OK.

Connect the hose and install the coolant, or proceed with repairs.

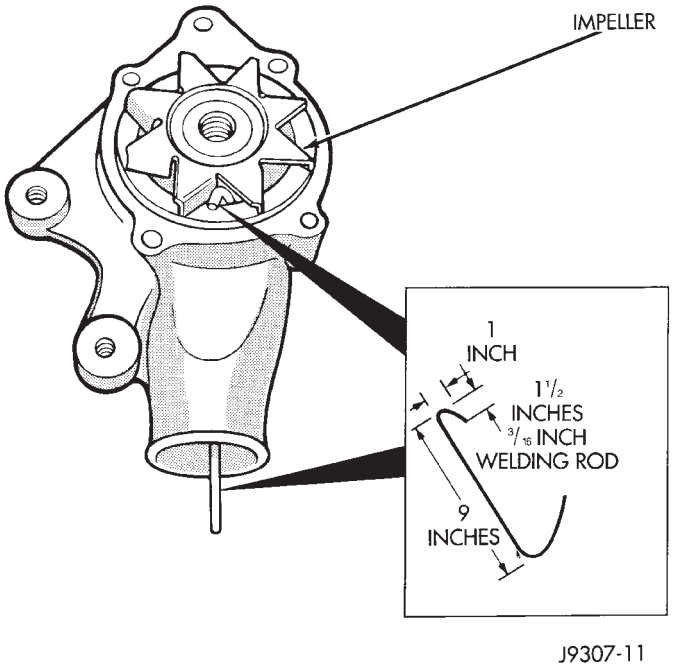

Fig. 2 Impeller Test—Typical

INSPECTING FOR INLET RESTRICTIONS

Inadequate heater performance may be caused by a metal casting restriction in the water pump heater hose inlet.

DO NOT WASTE reusable coolant. If solution is clean, drain coolant into a clean container for reuse.

WARNING: DO NOT REMOVE THE CYLINDER BLOCK DRAIN PLUGS OR LOOSEN THE RADIATOR DRAINCOCK WITH THE SYSTEM HOT AND UNDER PRESSURE. SERIOUS BURNS FROM THE COOLANT CAN OCCUR.

(1) Drain sufficient coolant from the radiator to decrease the level below the water pump heater hose inlet.

(2) Remove the heater hose.

(3) Inspect the inlet for metal casting flash or other restrictions.

Remove the pump from engine before removing restriction to prevent contamination of the coolant with debris. Refer to Water Pump Removal.

WATER PUMPS—REMOVAL/INSTALLATION

REMOVAL—ALL MODELS

CAUTION: If the water pump is replaced because of mechanical damage, the fan blades and viscous fan drive should also be inspected. These components could have been damaged due to excessive vibration.

The water pump on all models can be removed without discharging the air conditioning system (if equipped).

CAUTION: All engines have a reverse (counterclockwise) rotating water pump. The letter R is stamped into the back of the water pump impeller (Fig. 1) to identify. Engines from previous model years, depending upon application, may be equipped with a forward (clockwise) rotating water pump. Installation of the wrong water pump will cause engine over heating.

The water pump impeller is pressed on the rear of the pump shaft and bearing assembly. The water pump is serviced only as a complete assembly.

WARNING: DO NOT REMOVE THE BLOCK DRAIN PLUG(S) OR LOOSEN RADIATOR DRAINCOCK WITH THE SYSTEM HOT AND UNDER PRESSURE. SERIOUS BURNS FROM COOLANT CAN OCCUR.

DO NOT WASTE reusable coolant. If the solution is clean, drain coolant into a clean container for reuse.

(1) Disconnect negative battery cable at battery.

(2) Drain the cooling system. Refer to Draining Cooling System in this group.

(3) **XJ models with 4.0L 6-cylinder engine equipped with A/C or heavy duty cooling system:**

Loosen (but do not remove at this time) the four water pump pulley-to-water pump hub mounting bolts (Fig. 3).

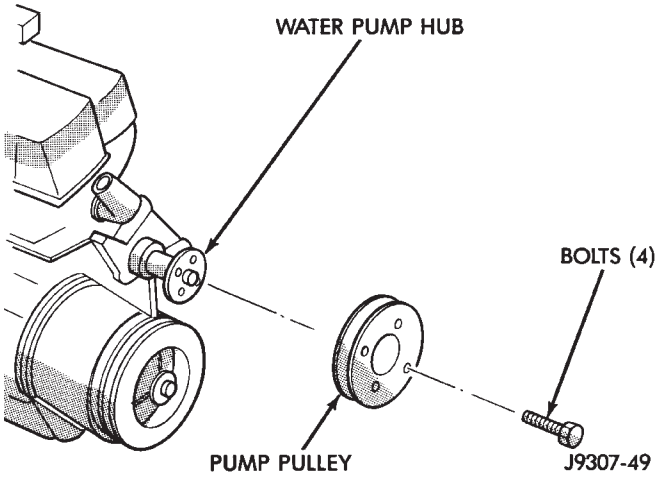

Fig. 3 Water Pump Pulley Bolts

XJ models with 4.0L 6-cylinder engine without A/C or heavy duty cooling system; or any 2.5L 4-cylinder engines; or any YJ models:

Loosen (but do not remove at this time) the four fan hub-to-water pump pulley mounting nuts (Fig. 4).

The engine accessory drive belt must be removed

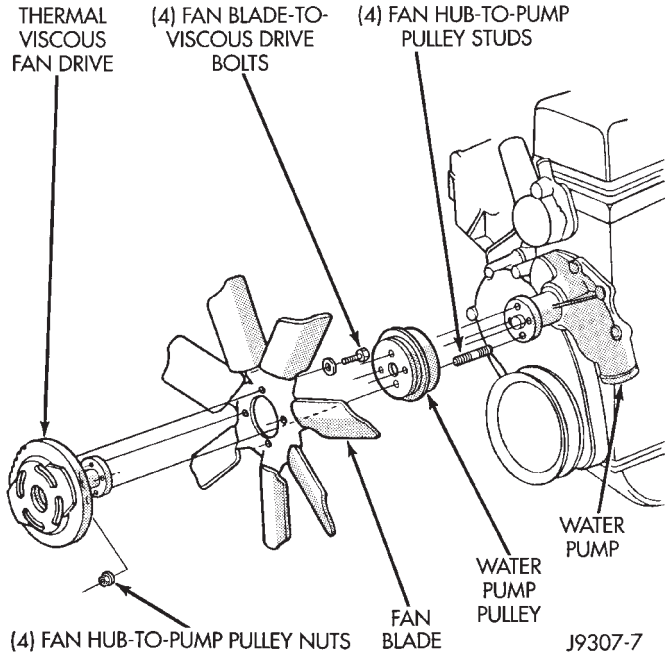

Fig. 4 Fan Mounting Nuts

prior to removing the fan (if installed at pump) or fan pulley.

(4) Remove engine drive belt as follows:

(a) Loosen two rear power steering pump mounting bolts A (Fig. 5).

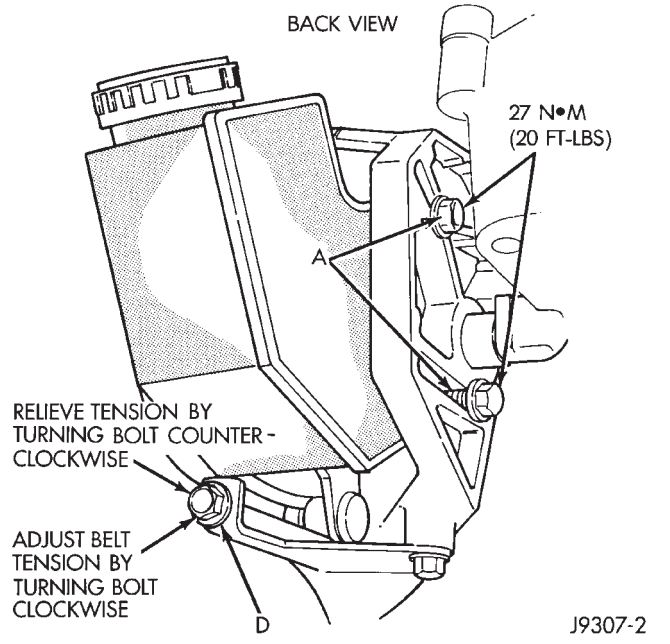

Fig. 5 P.S. Pump Rear Mounting Bolts—Typical

(b) Loosen upper pump pivot bolt B and lower lock nut C (Figs. 6 or 7).

(c) Loosen pump adjusting bolt D (Fig. 5) until belt can be removed.

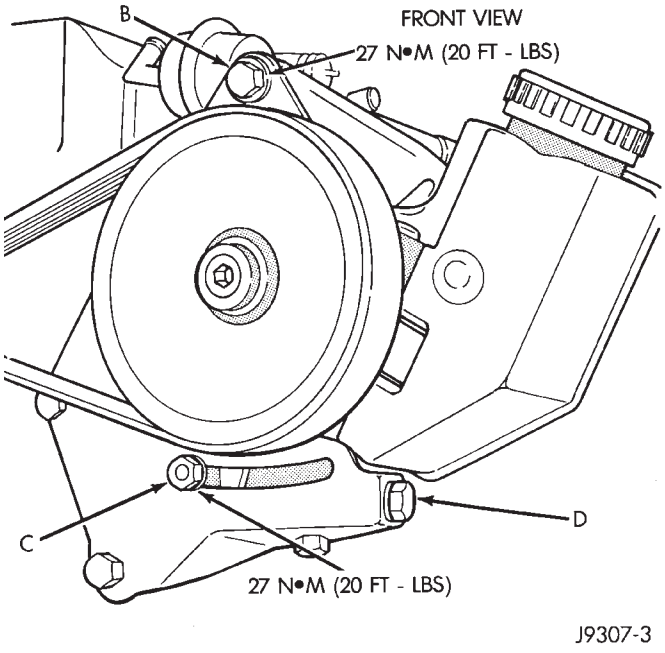

Fig. 6 P.S. Pump Front Mounting Bolt/Locknut—Typical

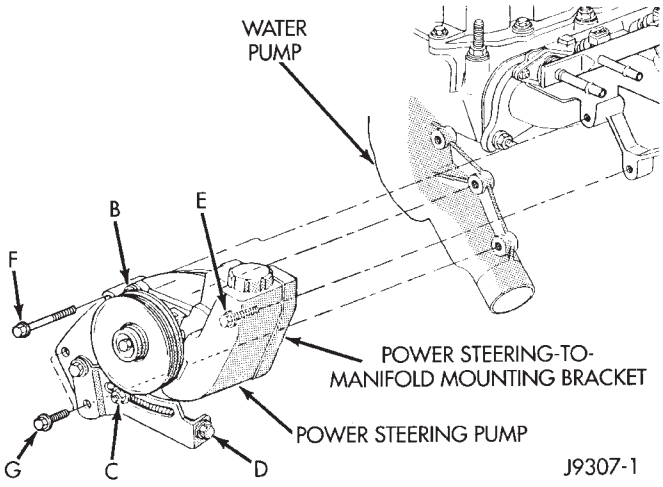

Fig. 7 Bracket Mounting Bolts—Typical

(d) Remove belt.

(5) Check condition of all pulleys.

(6) The power steering pump must be removed from its cast mounting bracket to gain access to bolt E. Bracket mounting bolt E is located behind the power steering pump (Fig. 7).

(7) Remove two bolts A (Fig. 5).

(8) Remove locknut C and belt adjustment bolt D (Figs. 6 or 7).

(9) Remove bolt B (Fig. 6). Position power steering pump to the side. Hold pump in position with wire. Do not disconnect hydraulic lines from pump.

(10) Remove bolts E, F and G (Fig. 7) and remove pump mounting bracket.

(11) Remove idler pulley mounting bolt and remove idler pulley. This must be done to gain clearance for the water pump mounted heater hose fitting when water pump is being removed. Note position of pulley spacers after removal.

WARNING: CONSTANT TENSION HOSE CLAMPS ARE USED ON MOST COOLING SYSTEM HOSES. WHEN REMOVING OR INSTALLING, USE ONLY TOOLS DESIGNED FOR SERVICING THIS TYPE OF CLAMP, SUCH AS SPECIAL CLAMP TOOL (NUMBER 6094) (FIG. 8). SNAP-ON CLAMP TOOL (NUMBER HPC-20) MAY BE USED FOR LARGER CLAMPS. ALWAYS WEAR SAFETY GLASSES WHEN SERVICING CONSTANT TENSION CLAMPS.

CAUTION: A number or letter is stamped into the tongue of constant tension clamps (Fig. 9). If replacement is necessary, use only an original equipment clamp with matching number or letter.

(12) Remove lower radiator hose from water pump. Remove heater hose from water pump fitting.

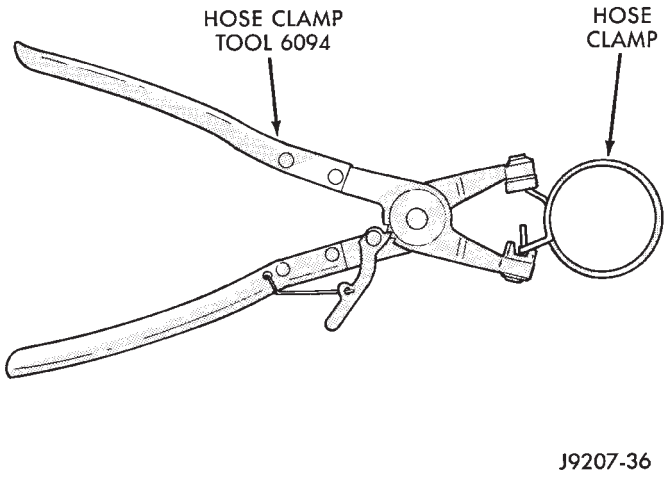

Fig. 8 Hose Clamp Tool—Typical

(13) Remove four nuts or bolts (refer to the previous step #3).

(14) Remove the fan blade assembly and pulley (if fan is installed at pump), or remove the pulley from the vehicle.

After removing fan blade/viscous fan drive assembly, **do not** place thermal viscous fan drive in horizontal position. If stored horizontally, silicone fluid in viscous fan drive could drain into its bearing assembly and contaminate lubricant.

(15) Remove the four pump mounting bolts (Fig. 10) and remove pump from vehicle. Discard old gasket. Note that one of the four bolts is longer than the other bolts.

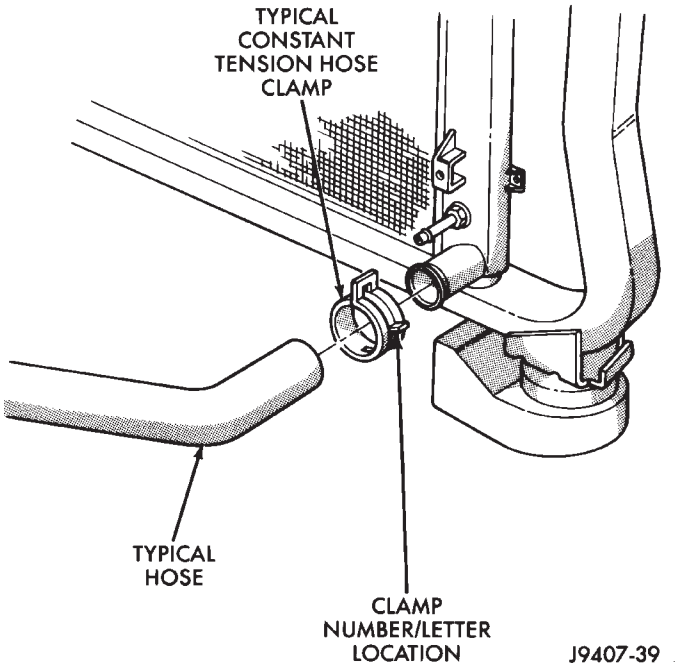

Fig. 9 Clamp Number/Letter Location

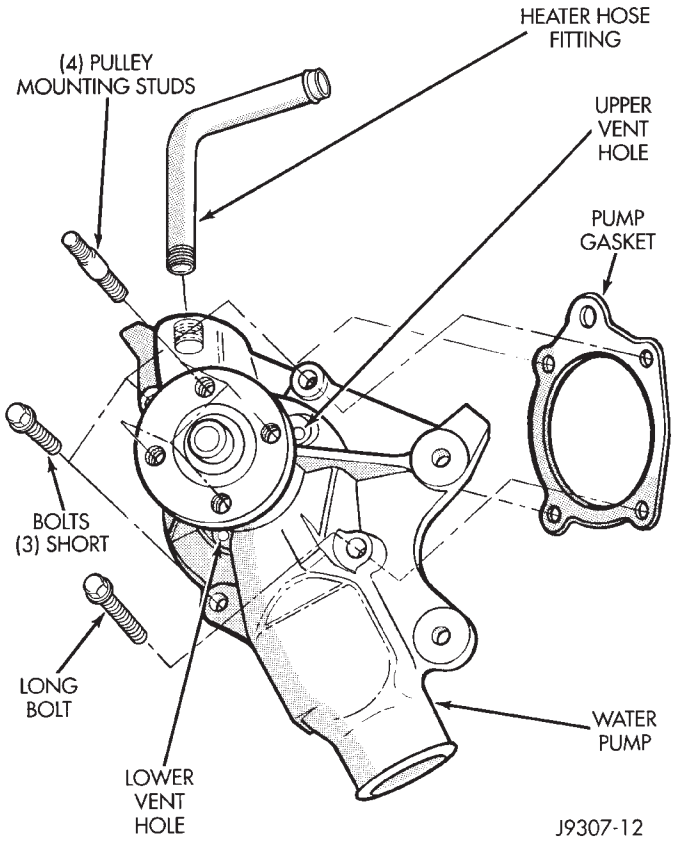

Fig. 10 Water Pump Remove/Install—Typical

(16) If pump is to be replaced, the heater hose fitting must be removed. Note position of fitting before removal.

INSTALLATION—ALL MODELS

(1) If pump is being replaced, install the heater hose fitting to the pump. Use a sealant on the fitting such as Mopar™ Thread Sealant With Teflon. Refer to the directions on the package.

(2) Clean the gasket mating surfaces. If the original pump is used, remove any deposits or other foreign material. Inspect the cylinder block and water pump mating surfaces for erosion or damage from cavitation.

(3) Install the gasket and water pump. The silicone bead on the gasket should be facing the water pump. Also, the gasket is installed dry. Tighten mounting bolts to 30 N·m (22 ft. lbs.) torque. Rotate the shaft by hand to be sure it turns freely.

(4) Connect the radiator and heater hoses to the water pump.

(5) Position water pump pulley to water pump hub.

(6) If equipped with a water pump mounted fan, install fan and four nuts to water pump hub. If not equipped with a water pump mounted fan, install four pump hub bolts. Tighten bolts (or nuts) to 27 N·m (20 ft. lbs.) torque.

(7) Position power steering pump bracket to engine. Install bolts E, F and G (Fig. 7). Tighten bolts F and G to 38 N·m (28 ft. lbs.) torque. Tighten bolt E to 27 N·m (20 ft. lbs.) torque.

(8) Position power steering pump to mounting bracket. Install pivot bolt B (Fig. 6) finger tight. Install locknut C and adjustment bolt D (Figs. 6 or 7) finger tight.

(9) Install two adjustment bolts A (Fig. 6) finger tight.

(10) Install idler pulley.

CAUTION: When installing the serpentine engine accessory drive belt, the belt MUST be routed correctly. If not, the engine may overheat due to the water pump rotating in the wrong direction. Refer to figures 11, 12, 13 or 14 for appropriate belt routing. You may also refer to the Belt Routing Label in the vehicle engine compartment.

(11) Position drive belt to pulleys.

(12) Tighten belt adjustment bolt D (Fig. 5) to the proper tension. Refer to the Specifications section at the end of this group for belt tension.

(13) Tighten bolts A (Fig. 5) to 27 N·m (20 ft. lbs.) torque.

(14) Tighten pivot bolt B (Fig. 6) to 27 N·m (20 ft. lbs.) torque.

(15) Tighten locknut C (Fig. 6) to 27 N·m (20 ft. lbs.) torque.

(16) After the power steering pump has been tightened, recheck belt tension.

(17) Fill cooling system with coolant and check for leaks. Refer to Refilling Cooling System in this group.

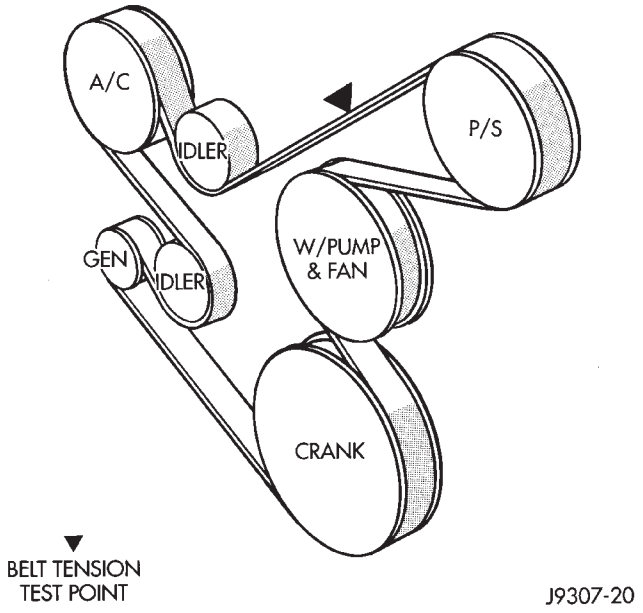

Fig. 11 YJ Models with 4.0L Engine, and XJ Models with 2.5L 4-Cylinder Engine—With A/C

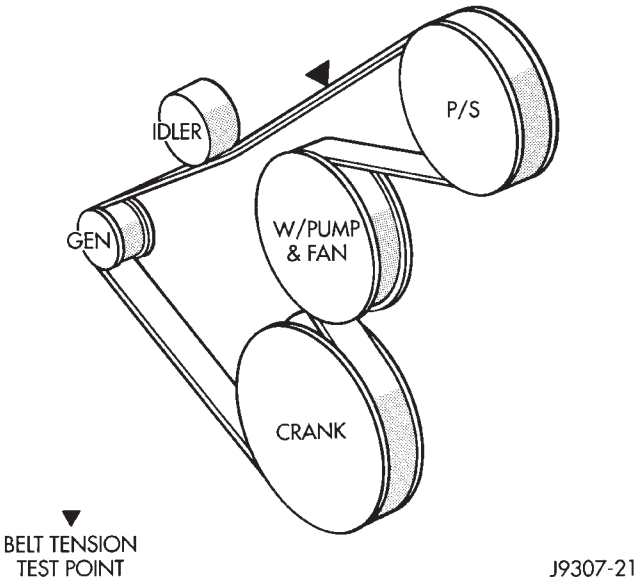

Fig. 12 YJ Models With 2.5L or 4.0L Engine, and XJ Models with 2.5L Engine—Without A/C

(18) Connect battery cable to battery.

(19) Start and warm the engine. Check for leaks.

THERMOSTAT

DESCRIPTION AND OPERATION

A pellet-type thermostat controls the operating temperature of the engine by controlling the amount of coolant flow to the radiator. On all engines the thermostat is closed below 195°F (90°C). Above this

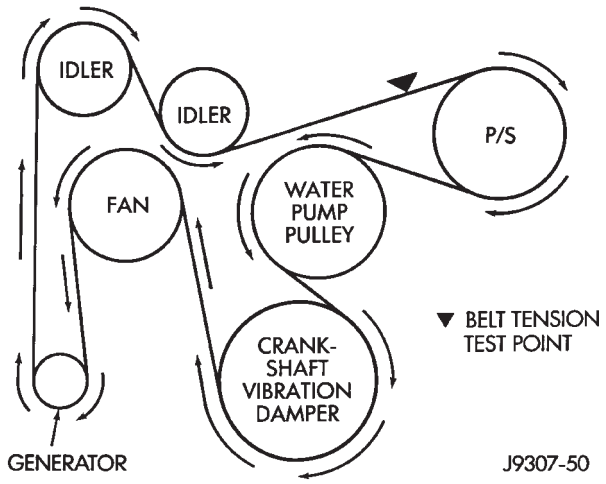

Fig. 13 XJ Models with 4.0L 6-Cylinder Engine—Without A/C

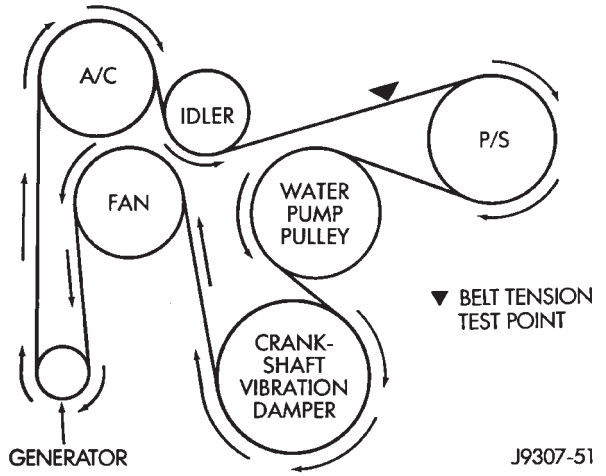

Fig. 14 XJ Models With 4.0L 6-Cylinder Engine—With A/C

temperature, coolant is allowed to flow to the radiator. This provides quick engine warmup and overall temperature control.

An arrow plus the word **UP** is stamped on the front flange next to the air bleed. The words **TO RAD** are stamped on one arm of the thermostat. They indicate the proper installed position.

The same thermostat is used for winter and summer seasons. An engine should not be operated without a thermostat, except for servicing or testing. Operating without a thermostat causes other problems. These are: longer engine warmup time, unreliable warmup performance, increased exhaust emissions and crankcase condensation. This condensation can result in sludge formation.

CAUTION: Do not operate an engine without a thermostat, except for servicing or testing.

ON-BOARD DIAGNOSTICS

XJ and YJ models are equipped with On-Board Diagnostics for certain cooling system components. Refer to On-Board Diagnostics (OBD) in the Diagnosis section of this group for additional information. If the powertrain control module (PCM) detects low engine coolant temperature, it will record a Diagnostic Trouble Code (DTC) in the PCM memory. The DTC number for low coolant temperature is 17. Do not change a thermostat for lack of heat as indicated by the instrument panel gauge or heater performance unless a DTC number 17 is present. Refer to the Diagnosis section of this group for other probable causes. For other DTC numbers, refer to On-Board Diagnostics in the General Diagnosis section of Group 14, Fuel Systems.

The DTC can also be accessed through the DRB scan tool. Refer to the appropriate Powertrain Diagnostic Procedures manual for diagnostic information and operation of the DRB scan tool.

REMOVAL

WARNING: DO NOT LOOSEN THE RADIATOR DRAINCOCK WITH THE SYSTEM HOT AND PRESSURIZED. SERIOUS BURNS FROM THE COOLANT CAN OCCUR.

DO NOT WASTE reusable coolant. If the solution is clean, drain the coolant into a clean container for reuse.

(1) Drain the coolant from the radiator until the level is below the thermostat housing.

WARNING: CONSTANT TENSION HOSE CLAMPS ARE USED ON MOST COOLING SYSTEM HOSES. WHEN REMOVING OR INSTALLING, USE ONLY TOOLS DESIGNED FOR SERVICING THIS TYPE OF CLAMP, SUCH AS SPECIAL CLAMP TOOL (NUMBER 6094) (FIG. 15). SNAP-ON CLAMP TOOL (NUMBER HPC-20) MAY BE USED FOR LARGER CLAMPS. ALWAYS WEAR SAFETY GLASSES WHEN SERVICING CONSTANT TENSION CLAMPS.

CAUTION: A number or letter is stamped into the tongue of constant tension clamps (Fig. 16). If replacement is necessary, use only an original equipment clamp with matching number or letter.

(2) Remove radiator upper hose and heater hose at thermostat housing.

(3) Disconnect wiring connector at engine coolant temperature sensor.

(4) Remove thermostat housing mounting bolts, thermostat housing, gasket and thermostat (Fig. 17). Discard old gasket.

(5) Clean the gasket mating surfaces.

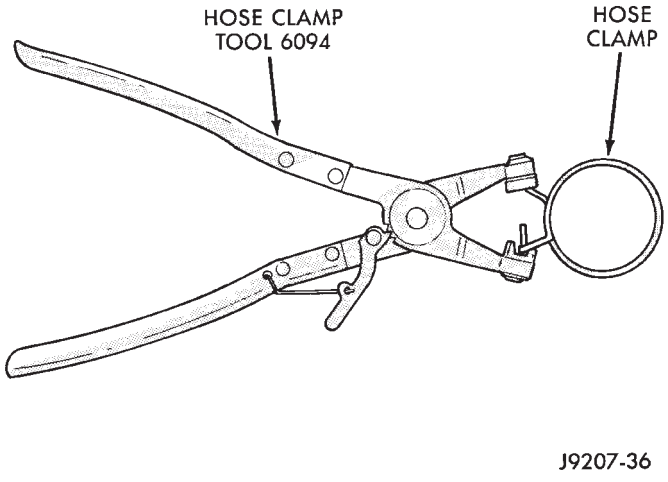

Fig. 15 Hose Clamp Tool—Typical

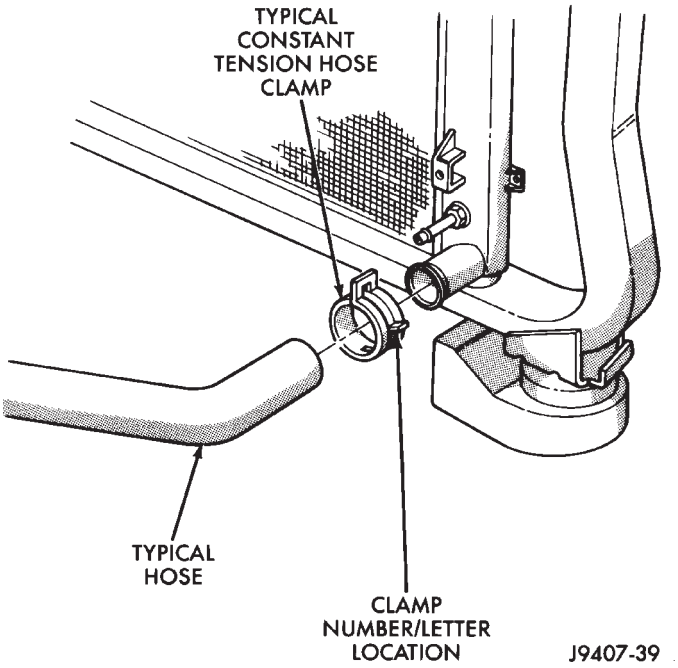

Fig. 16 Clamp Number/Letter Location

INSTALLATION

(1) Install the replacement thermostat so that the pellet, which is encircled by a coil spring, faces the engine. All thermostats are marked on the outer flange to indicate the proper installed position.

(a) Observe the recess groove in the engine cylinder head (Fig. 18).

(b) Position thermostat into this groove with arrow and air bleed hole on outer flange pointing up.

(2) Install replacement gasket and thermostat housing.

CAUTION: Tightening the thermostat housing unevenly or with the thermostat out of its recess may result in a cracked housing.

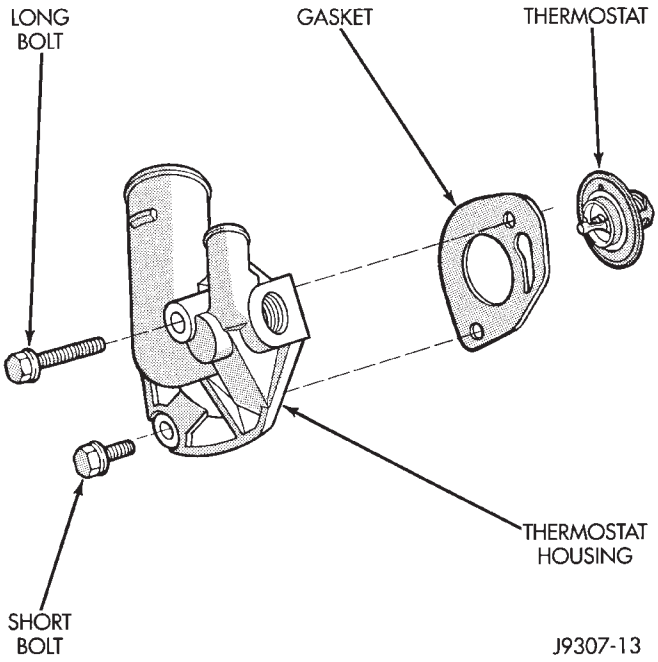

Fig. 17 Thermostat Removal/Installation

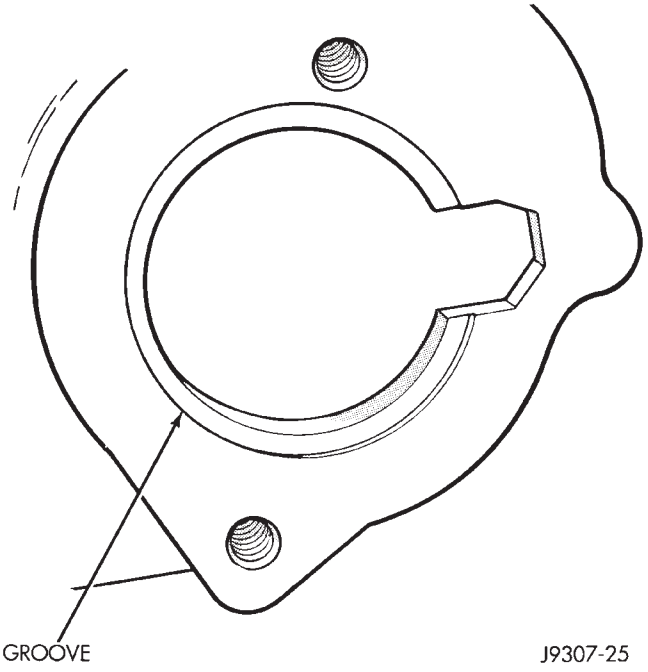

Fig. 18 Thermostat Recess

(3) Tighten the housing bolts to 20 N·m (15 ft. lbs.) torque.

(4) Install hoses to thermostat housing.

(5) Install electrical connector to coolant temperature sensor.

(6) Be sure that the radiator draincock is tightly closed. Fill the cooling system to the correct level with the required coolant mixture. Refer to Refilling Cooling System in this group.

(7) Start and warm the engine. Check for leaks.

COOLANT

GENERAL INFORMATION

The cooling system is designed around the coolant. Coolant flows through the engine water jackets absorbing heat produced during engine operation. The coolant carries heat to the radiator and heater core. Here it is transferred to the ambient air passing through the radiator and heater core fins. The coolant also removes heat from the automatic transmission fluid in vehicles equipped with an automatic transmission.

COOLANT PERFORMANCE

The required ethylene-glycol (antifreeze) and water mixture depends upon climate and vehicle operating conditions. The coolant performance of various mixtures follows:

Pure Water-Water can absorb more heat than a mixture of water and ethylene-glycol. This is for purpose of heat transfer only. Water also freezes at a higher temperature and allows corrosion.

100 percent Ethylene-Glycol-The corrosion inhibiting additives in ethylene-glycol need the presence of water to dissolve. Without water, additives form deposits in system. These act as insulation causing temperature to rise to as high as 149°C (300°F). This temperature is hot enough to melt plastic and soften solder. The increased temperature can result in engine detonation. In addition, 100 percent ethylene-glycol freezes at -22°C (-8°F).

50/50 Ethylene-Glycol and Water-Is the recommended mixture, it provides protection against freezing to -37°C (-35°F). The antifreeze concentration **must always** be a minimum of 44 percent, year-round in all climates. If percentage is lower, engine parts may be eroded by cavitation. Maximum protection against freezing is provided with a 68 percent antifreeze concentration, which prevents freezing down to -67.7°C (-90°F). A higher percentage will freeze at a warmer temperature. Also, a higher percentage of antifreeze can cause the engine to overheat because specific heat of antifreeze is lower than that of water.

CAUTION: Richer antifreeze mixtures cannot be measured with normal field equipment and can cause problems associated with 100 percent ethylene-glycol.

COOLANT SELECTION-ADDITIVES

Coolant should be maintained at the specified level with a mixture of ethylene glycol-based antifreeze and low mineral content water. Only use an antifreeze containing ALUGARD 340-2 ™.

CAUTION: Do not use coolant additives that are claimed to improve engine cooling.

COOLANT SERVICE

It is recommended that the cooling system be drained and flushed at 84,000 kilometers (52,500 miles), or 3 years, whichever occurs first. Then every two years, or 48,000 kilometers (30,000 miles), whichever occurs first.

COOLANT LEVEL CHECK—ROUTINE

Do not remove radiator cap for routine coolant level inspections. The coolant level can be checked at coolant reserve/overflow tank.

The coolant reserve/overflow system provides a quick visual method for determining coolant level without removing radiator pressure cap. With engine idling and at normal operating temperature, observe coolant level in reserve/overflow tank. The coolant level should be between ADD and FULL marks.

ADDING ADDITIONAL COOLANT—ROUTINE

Do not remove radiator cap to add coolant to system. When adding coolant to maintain correct level, do so at coolant reserve/overflow tank. Use a 50/50 mixture of ethylene-glycol antifreeze containing Alugard 340-2 ™ and low mineral content water. Remove radiator cap only for testing or when refilling system after service. Removing cap unnecessarily can cause loss of coolant and allow air to enter system, which produces corrosion.

COOLANT LEVEL CHECK-SERVICE

The cooling system is closed and designed to maintain coolant level to top of radiator.

WARNING: DO NOT OPEN RADIATOR DRAINCOCK WITH ENGINE RUNNING OR WHILE ENGINE IS HOT AND COOLING SYSTEM IS UNDER PRESSURE.

When vehicle servicing requires a coolant level check in radiator, drain several ounces of coolant from radiator drain cock. Do this while observing coolant reserve/overflow system tank. The coolant level in reserve/overflow tank should drop slightly. If not, inspect for a leak between radiator and coolant reserve/overflow system connection. Remove radiator cap. The coolant level should be to top of radiator. If not and if coolant level in reserve/overflow tank is at ADD mark, check for:

- An air leak in coolant reserve/overflow tank or its hose
- An air leak in radiator filler neck
- Leak in pressure cap seal to radiator filler neck

LOW COOLANT LEVEL-AERATION

If the coolant level in radiator drops below top of radiator core tubes, air will enter cooling system.

Low coolant level can cause thermostat pellet to be suspended in air instead of coolant. This will cause thermostat to open later, which in turn causes higher coolant temperature. Air trapped in cooling system also reduces amount of coolant circulating in heater core resulting in low heat output.

DEAERATION

As the engine operates, any air trapped in cooling system gathers under the radiator cap. The next time the engine is operated, thermal expansion of coolant will push any trapped air past radiator cap into the coolant reserve/overflow tank. Here it escapes to the atmosphere into the tank. When the engine cools down the coolant, it will be drawn from the reserve/overflow tank into the radiator to replace any removed air.

DRAINING COOLING SYSTEM

ALL MODELS—EXCEPT XJ WITH 4.0L 6-CYLINDER ENGINE

WARNING: DO NOT REMOVE THE CYLINDER BLOCK DRAIN PLUGS OR LOOSEN THE RADIATOR DRAINCOCK WITH SYSTEM HOT AND UNDER PRESSURE. SERIOUS BURNS FROM COOLANT CAN OCCUR.

DO NOT WASTE reusable coolant. If the solution is clean, drain the coolant into a clean container for reuse.

DO NOT remove the radiator cap when draining the coolant from the reserve/overflow tank. Open the radiator draincock and when the tank is empty, remove the radiator cap. The coolant does not have to be removed from the tank unless the system is being refilled with a fresh mixture.

(1) Drain the coolant from the radiator by loosening the draincock.

(2) Drain coolant from engine as follows:

(a) On 2.5L 4-cylinder engines (all models) by removing drain plug at left rear side of block.

(b) On 4.0L 6-cylinder engines by removing the drain plug or coolant temperature sensor on the left side of the block (Fig. 19).

XJ MODELS WITH 4.0L 6-CYLINDER ENGINE

WARNING: DO NOT REMOVE THE CYLINDER BLOCK DRAIN PLUGS OR LOOSEN THE RADIATOR DRAINCOCK WITH SYSTEM HOT AND UNDER PRESSURE. SERIOUS BURNS FROM COOLANT CAN OCCUR.

DO NOT WASTE reusable coolant. If the solution is clean, drain the coolant into a clean container for reuse.

(1) Remove radiator pressure cap.

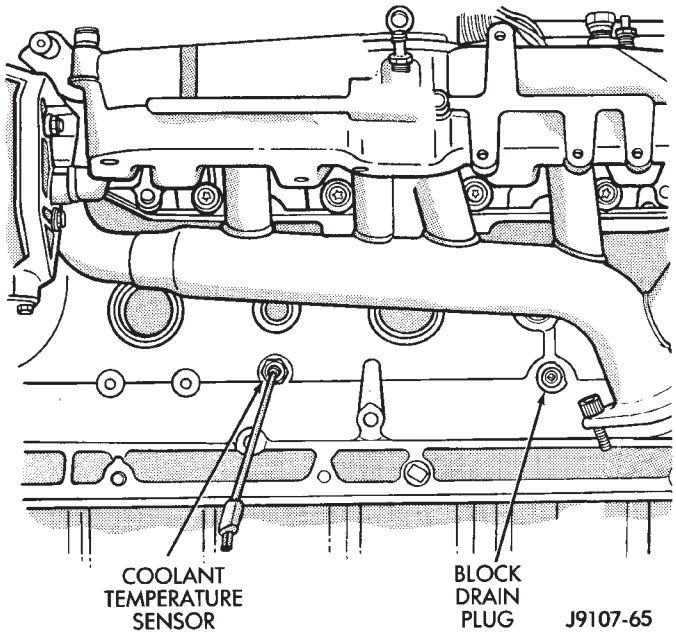

Fig. 19 Draining Coolant—4.0L 6-Cylinder Engine

(2) For access to radiator draincock, remove radiator grille mounting screws and remove grill. Refer to Group 23, Body for procedures.

(3) Attach one end of a 24 inch long X 1/4 inch ID hose to the radiator draincock. Put the other end into a clean container. Open draincock and drain coolant from radiator.

(4) Drain coolant from engine by removing the drain plug and coolant temperature sensor on left side of block (Fig. 19).

REFILLING COOLING SYSTEM

YJ MODELS

(1) Remove draining hose. Tighten the radiator draincock and the cylinder block drain plug(s).

(2) Fill system using a 50/50 mixture of water and antifreeze. This is described in the Coolant section of this group. Fill the radiator to the top and install the radiator cap. Add sufficient coolant to the reserve/overflow tank to raise the level to the FULL mark.

(3) Operate the engine with both the radiator cap and reserve/overflow tank cap in place. After the engine has reached the normal operating temperature, shut the engine off and allow it to cool.

(4) Add coolant to the reserve/overflow tank as necessary. **Only add coolant when the engine is cold. Coolant level in a warm engine will be higher due to thermal expansion.**

XJ MODELS

(1) Tighten the radiator draincock and the cylinder block drain plug(s). If removed, install coolant temperature sensor (4.0L 6-cylinder engine).

(2) Fill system using a 50/50 mixture of water and antifreeze as described in the Coolant section of this

group. Fill radiator to top and install radiator cap. Add sufficient coolant to reserve/overflow tank to raise level to FULL mark.

(3) With heater control unit in the HEAT position, operate engine with radiator cap in place.

(4) After engine has reached normal operating temperature, shut engine off and allow it to cool.

(5) Add coolant to reserve/overflow tank as necessary. **Only add coolant when the engine is cold. Coolant level in a warm engine will be higher due to thermal expansion.**

COOLING SYSTEM CLEANING/REVERSE FLUSHING

CAUTION: The cooling system normally operates at 97-to-124 kPa (14-to-18 psi) pressure. Exceeding this pressure may damage the radiator or hoses.

CLEANING

Drain cooling system and refill with water. Run engine with radiator cap installed until upper radiator hose is hot. Stop engine and drain water from system. If water is dirty, fill system with water, run engine and drain system. Repeat until water drains clean.

REVERSE FLUSHING

Reverse flushing of the cooling system is the forcing of water through the cooling system. This is done using air pressure in the opposite direction of normal coolant flow. It is usually only necessary with very dirty systems with evidence of partial plugging.

REVERSE FLUSHING RADIATOR

Disconnect the radiator hoses from the radiator fittings. Attach a section of radiator hose to the radiator bottom outlet fitting and insert the flushing gun. Connect a water supply hose and air supply hose to the flushing gun.

CAUTION: The cooling system normally operates at 97-to-124 kPa (14-to-18 psi) pressure. Exceeding this pressure may damage the radiator or hoses.

Allow the radiator to fill with water. When radiator is filled, apply air in short blasts allowing radiator to refill between blasts. Continue this reverse flushing until clean water flows out through rear of radiator cooling tube passages. For more information, refer to operating instructions supplied with flushing equipment. Have radiator cleaned more extensively by a radiator repair shop.

REVERSE FLUSHING ENGINE

Drain the cooling system. Remove the thermostat housing and thermostat. Install the thermostat housing. Disconnect the radiator upper hose from the radiator and attach the flushing gun to the hose. Disconnect the radiator lower hose from the water pump. Attach a lead away hose to the water pump inlet fitting.

CAUTION: On XJ models, be sure that the heater control valve is closed (heat off). This is done to prevent coolant flow with scale and other deposits from entering the heater core.

Connect the water supply hose and air supply hose to the flushing gun. Allow the engine to fill with water. When the engine is filled, apply air in short blasts, allowing the system to fill between air blasts. Continue until clean water flows through the lead away hose. For more information, refer to operating instructions supplied with flushing equipment.

Remove the lead away hose, flushing gun, water supply hose and air supply hose. Remove the thermostat housing and install thermostat. Install the thermostat housing with a replacement gasket. Refer to Thermostat Replacement. Connect the radiator hoses. Refill the cooling system with the correct antifreeze/water mixture.

CHEMICAL CLEANING

In some instances, use a radiator cleaner (Mopar Radiator Kleen or equivalent) before flushing. This will soften scale and other deposits and aid the flushing operation.

CAUTION: Be sure instructions on the container are followed.

TESTING COOLING SYSTEM FOR LEAKS

ULTRAVIOLET LIGHT METHOD

All Jeep models have a leak detection additive added to the cooling system before they leave the factory. The additive is highly visible under ultraviolet light (black light). If the factory original coolant has been drained, pour one ounce of additive into the cooling system. The additive is available through the part's department. Place the heater control unit in HEAT position. Start and operate the engine until the radiator upper hose is warm to the touch. Aim the commercially available black light tool at the components to be checked. If leaks are present, the black light will cause the additive to glow a bright green color.

The black light can be used along with a pressure tester to determine if any external leaks exist (Fig. 20).

PRESSURE TESTER METHOD

The engine should be at the normal operating temperature. Recheck the system cold if the cause of coolant loss is not located during warm engine examination.

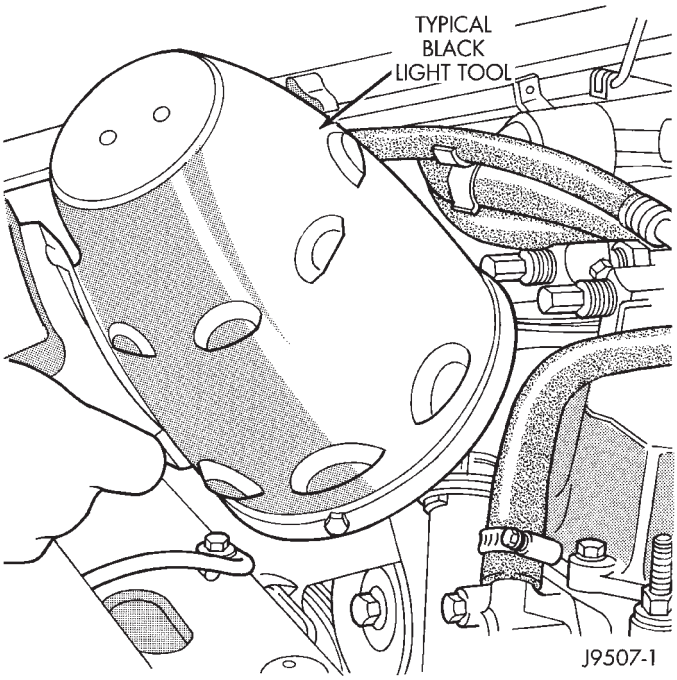

Fig. 20 Leak Detection Using Black Light—Typical

WARNING: HOT, PRESSURIZED COOLANT CAN CAUSE INJURY BY SCALDING.

Carefully remove the radiator pressure cap from the filler neck and check the coolant level. Push down on the cap to disengage it from the stop tabs. Wipe the inner part of the filler neck and examine the lower inside sealing seat for nicks, cracks, paint, dirt and solder residue. Inspect the reserve/overflow tank tube for internal obstructions. Insert a wire through the tube to be sure it is not obstructed.

Inspect the cams on the outside part of the filler neck. If the cams are bent, seating of pressure cap valve and tester seal will be affected. Replace cap if cams are bent.

Attach pressure tester 7700 (or an equivalent) to the radiator filler neck (Fig. 21).

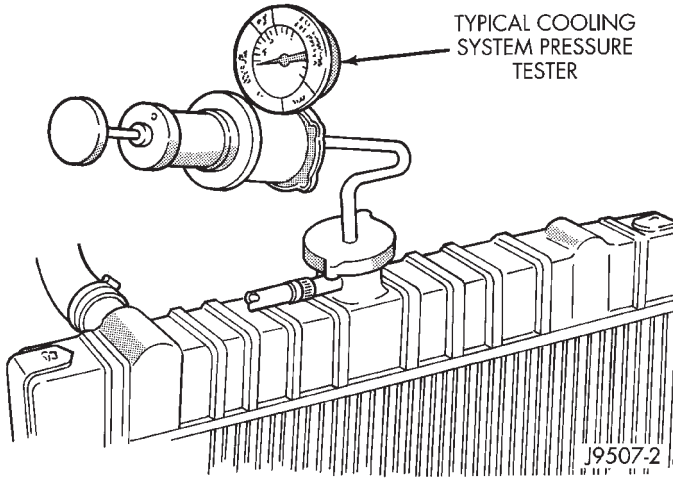

Fig. 21 Pressurizing System—Typical

Operate the tester pump to apply 124 kPa (18 psi) pressure to the system. If the hoses enlarge excessively or bulge while testing, replace as necessary. Observe the gauge pointer and determine the condition of the cooling system according to the following criteria:

- Holds Steady: If the pointer remains steady for two minutes, there are no serious coolant leaks in the system. However, there could be an internal leak that does not appear with normal system test pressure. Inspect for interior leakage or do the Internal Leakage Test. Do this if it is certain that coolant is being lost and no leaks can be detected.
- Drops Slowly: Shows a small leak or seepage is occurring. Examine all connections for seepage or slight leakage with a flashlight. Inspect the radiator, hoses, gasket edges and heater. Seal any small leak holes with a Sealer Lubricant or equivalent. Repair leak holes and reinspect the system with pressure applied.
- Drops Quickly: Shows that a serious leakage is occurring. Examine the system for serious external leakage. If no leaks are visible, inspect for internal leakage. Large radiator leak holes should be repaired by a reputable radiator repair shop.

INTERNAL LEAKAGE INSPECTION

Remove the engine oil pan drain plug and drain a small amount of engine oil. Coolant, being heavier than engine oil, will drain first. Another way of testing is to operate the engine and check for water globules on the engine oil dipstick. Also inspect the automatic transmission oil dipstick for water globules. Inspect the automatic transmission fluid cooler for leakage. Operate the engine without the pressure cap on the radiator until thermostat opens.

Attach a pressure tester to the filler neck. If pressure builds up quickly, a leak exists as a result of a faulty cylinder head gasket or crack in the engine. Repair as necessary.

WARNING: DO NOT ALLOW PRESSURE TO EXCEED 124 KPA (18 PSI). TURN THE ENGINE OFF. TO RELEASE THE PRESSURE, ROCK THE TESTER FROM SIDE TO SIDE. WHEN REMOVING THE TESTER, DO NOT TURN THE TESTER MORE THAN 1/2 TURN IF THE SYSTEM IS UNDER PRESSURE.

If there is no immediate pressure increase, pump the pressure tester until the indicated pressure is within the system range. Vibration of the gauge pointer indicates compression or combustion leakage into the cooling system.

WARNING: DO NOT DISCONNECT THE SPARK PLUG WIRES WHILE THE ENGINE IS OPERATING.

CAUTION: Do not operate the engine with a spark plug shorted for more than a minute. The catalytic converter may be damaged.

Isolate the compression leak by shorting each spark plug to the cylinder block. The gauge pointer should stop or decrease vibration when spark plug for leaking cylinder is shorted. This happens because of the absence of combustion pressure.

COMBUSTION LEAKAGE TEST (WITHOUT PRESSURE TESTER)

DO NOT WASTE reusable coolant. If the solution is clean, drain the coolant into a clean container for reuse.

WARNING: DO NOT REMOVE THE CYLINDER BLOCK DRAIN PLUGS OR LOOSEN THE RADIATOR DRAINCOCK WITH THE SYSTEM HOT AND UNDER PRESSURE. SERIOUS BURNS FROM COOLANT CAN OCCUR.

Drain sufficient coolant to allow for thermostat removal. Refer to Thermostat Replacement. Disconnect the water pump drive belt.

Disconnect the upper radiator hose from the thermostat housing. Remove the housing and thermostat. Install the thermostat housing.

Add coolant to the radiator to bring the level to within 6.3 mm (1/4 in) of the top of the thermostat housing.

CAUTION: Avoid overheating. Do not operate the engine for an excessive period of time. Open the draincock immediately after the test to eliminate boil over of coolant.

Start the engine and accelerate rapidly three times (to approximately 3000 rpm) while observing the coolant. If internal engine combustion gases are leaking into the cooling system, bubbles will appear in the coolant. If bubbles do not appear, there is no internal combustion gas leakage.

COOLANT RESERVE/OVERFLOW SYSTEM

The system works along with the radiator pressure cap. This is done by using thermal expansion and contraction of the coolant to keep the coolant free of trapped air. It provides:

- A volume for coolant expansion and contraction.
- A convenient and safe method for checking/adjusting coolant level at atmospheric pressure. This is done without removing the radiator pressure cap.
- Some reserve coolant to the radiator to cover minor leaks and evaporation or boiling losses.

As the engine cools, a vacuum is formed in the cooling system of both the radiator and engine. Coolant will then be drawn from the coolant tank and returned to a proper level in the radiator.

The coolant reserve/overflow system consists of a radiator mounted pressurized cap, a plastic reserve/overflow tank (Figs. 22, 23 or 24), a tube (hose) connecting the radiator and tank, and an overflow tube on the side of the tank.

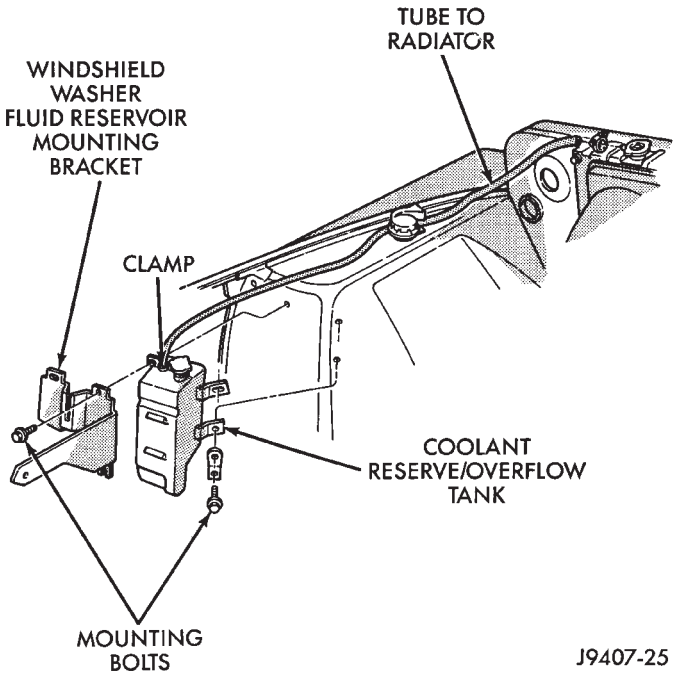

Fig. 22 Reserve/Overflow Tank—YJ Models

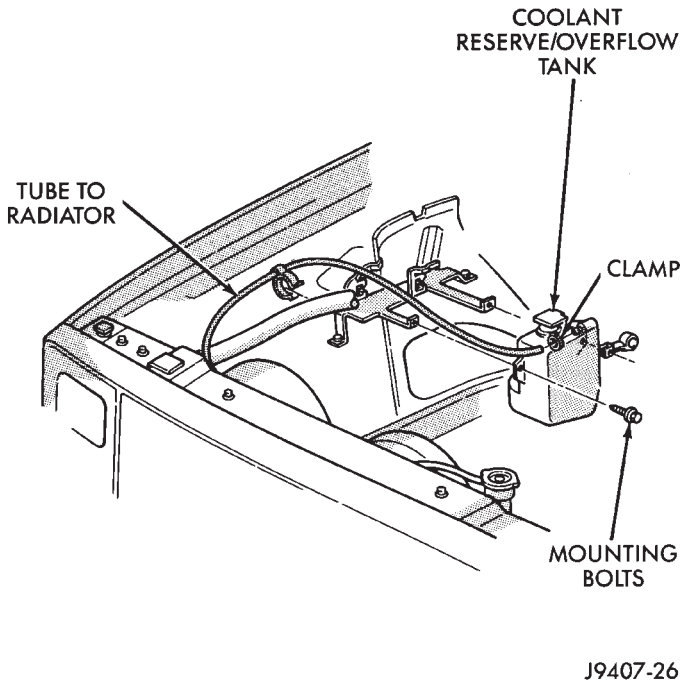

Fig. 23 Reserve/Overflow Tank—XJ Models—Except Right Hand Drive

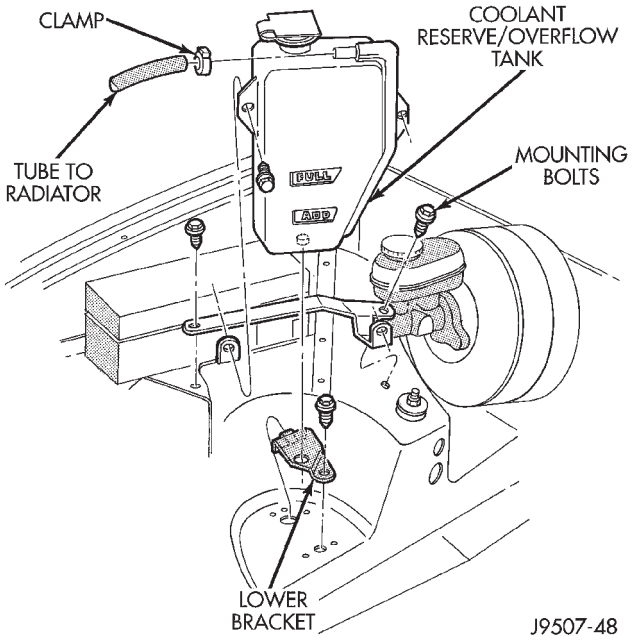

Fig. 24 Reserve/Overflow Tank—XJ Models—With Right Hand Drive

TANK REMOVAL/INSTALLATION

(1) Remove the tube clamp at the tank and remove tube.

(2) On YJ models, remove the windshield washer reservoir and its mounting bracket.

(3) Remove the tank mounting bolts and remove tank.

(4) Reverse the preceding steps for installation.

RADIATOR PRESSURE CAP

All radiators are equipped with a pressure cap. This cap releases pressure at some point within a range of 83-110 kPa (12-16 psi). The pressure relief point (in pounds) is engraved on top of the cap (Fig. 25).

The cooling system will operate at pressures slightly above atmospheric pressure. This results in a higher coolant boiling point allowing increased radiator cooling capacity. The cap (Fig. 25) contains a spring-loaded pressure relief valve. This valve opens when system pressure reaches the release range of 83-110 kPa (12-16 psi).

A vent valve in the center of the cap allows a small coolant flow through the cap when coolant is below boiling temperature. The valve is completely closed when boiling point is reached. As coolant cools, it contracts and creates a vacuum in the cooling system. This causes the vacuum valve to open and coolant in reserve/overflow tank to be drawn through connecting hose into radiator. If the vacuum valve is stuck shut, radiator hoses will collapse on cool-down.

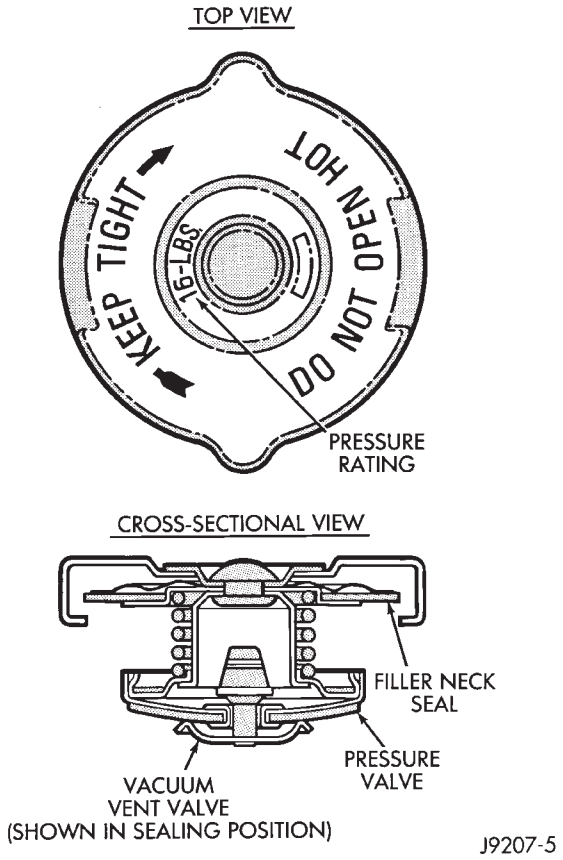

Fig. 25 Radiator Pressure Cap

A rubber gasket seals the radiator filler neck. This is done to maintain vacuum during coolant cool-down and to prevent leakage when system is under pressure.

RADIATOR CAP-TO-FILLER NECK SEAL—PRESSURE RELIEF CHECK

With radiator cap installed on filler neck, remove coolant reserve/ overflow tank hose from nipple on filler neck. Connect a hand operated vacuum pump to nipple. Operate pump until a reading of 47-to-61 kPa (14-to-18 in. Hg) appears on gauge. If the reading stays steady, or drops slightly and then remains steady, the pressure valve seal is good. Replace radiator cap if reading does not hold.

WARNING: THE WARNING WORDS -DO NOT OPEN HOT- ON THE RADIATOR PRESSURE CAP (FIG. 25) ARE A SAFETY PRECAUTION. WHEN HOT, PRESSURE BUILDS UP IN COOLING SYSTEM. TO PREVENT SCALDING OR INJURY, THE RADIATOR CAP SHOULD NOT BE REMOVED WHILE THE SYSTEM IS HOT AND/OR UNDER PRESSURE.

There is no need to remove the radiator cap **except** for the following purposes:

(1) To check and adjust antifreeze freeze point.

(2) To refill system with new antifreeze.

(3) For conducting service procedures.

(4) When checking for vacuum leaks.

WARNING: IF VEHICLE HAS BEEN RUN RECENTLY, WAIT AT LEAST 15 MINUTES BEFORE REMOVING RADIATOR CAP. WITH A RAG, SQUEEZE RADIATOR UPPER HOSE TO CHECK IF SYSTEM IS UNDER PRESSURE. PLACE A RAG OVER THE CAP AND WITHOUT PUSHING DOWN, ROTATE CAP COUNTER-CLOCKWISE TO THE FIRST STOP. ALLOW FLUID TO ESCAPE THROUGH OVERFLOW HOSE INTO COOLANT RESERVE/OVERFLOW TANK. SQUEEZE RADIATOR UPPER HOSE TO DETERMINE WHEN PRESSURE HAS BEEN RELEASED. WHEN COOLANT AND STEAM STOP BEING PUSHED INTO TANK AND SYSTEM PRESSURE DROPS, REMOVE RADIATOR CAP COMPLETELY.

PRESSURE TESTING RADIATOR CAPS

Remove cap from radiator. Be sure that sealing surfaces are clean. Moisten rubber gasket with water and install the cap on pressure tester (tool 7700 or an equivalent) (Fig. 26).

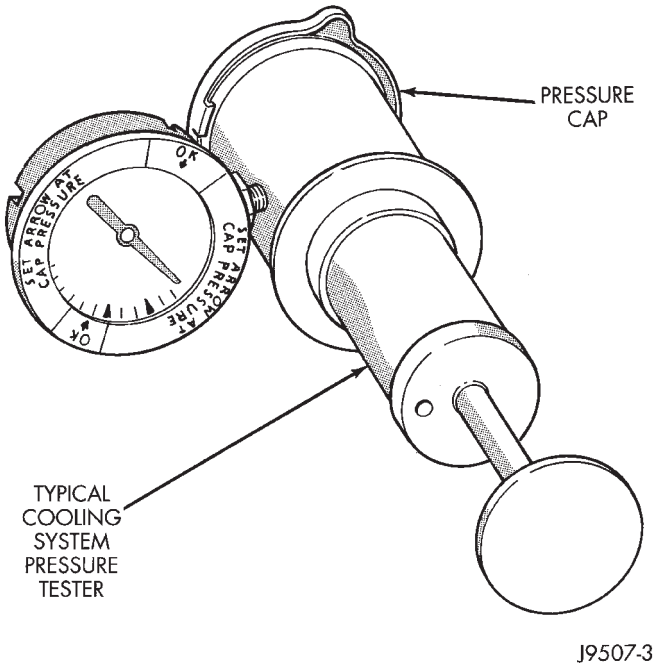

Fig. 26 Pressure Testing Radiator Pressure Cap—Typical

Operate the tester pump and observe the gauge pointer at its highest point. The cap release pressure should be 83-to-110 kPa (12-to-16 psi). The cap is satisfactory when the pressure holds steady. It is also good if it holds pressure within the 83-to-110 kPa (12-to-16 psi) range for 30 seconds or more. If the pointer drops quickly, replace the cap.

CAUTION: Radiator pressure testing tools are very sensitive to small air leaks, which will not cause cooling system problems. A pressure cap that does not have a history of coolant loss should not be replaced just because it leaks slowly when tested with this tool. Add water to tool. Turn tool upside down and recheck pressure cap to confirm that cap needs replacement.

INSPECTION

Visually inspect the pressure valve gasket on the cap. Replace cap if the gasket is swollen, torn or worn. Inspect the area around radiator filler neck for white deposits that indicate a leaking cap.

RADIATORS

GENERAL INFORMATION

All radiators are down flow types except XJ models equipped with 4.0L 6-cylinder engines. Radiators in XJ models equipped with the 4.0L 6-cylinder engine are the cross flow type. Plastic tanks are used on all radiators.

CAUTION: Plastic tanks, while stronger than brass, are subject to damage by impact, such as wrenches.

If the plastic tank has been damaged, the plastic tank and/or o-rings are available for service repair. Tank replacement should be done by qualified personal with proper equipment.

RADIATOR COOLANT FLOW CHECK

The following procedure will determine if coolant is flowing through the cooling system.

If engine is cold, idle engine until normal operating temperature is reached. Then feel the upper radiator hose. If hose is hot, the thermostat is open and water is circulating through cooling system.

RADIATOR CLEANING

The radiator and air conditioning fins should be cleaned when an accumulation of bugs, leaves etc. has occurred. Clean radiator fins are necessary for good heat transfer. With the engine cold, apply cold water and compressed air to the back (engine side) of the radiator to flush the radiator and/or A/C condenser of debris.

RADIATOR REMOVAL/INSTALLATION

WARNING: DO NOT REMOVE THE CYLINDER BLOCK DRAIN PLUGS, RADIATOR CAP, OR LOOSEN THE RADIATOR DRAINCOCK WITH THE SYSTEM HOT AND PRESSURIZED. SERIOUS BURNS FROM THE COOLANT CAN OCCUR.

DO NOT WASTE reusable coolant. If solution is clean, drain coolant into a clean container for reuse.

WARNING: CONSTANT TENSION HOSE CLAMPS ARE USED ON MOST COOLING SYSTEM HOSES. WHEN REMOVING OR INSTALLING, USE ONLY TOOLS DESIGNED FOR SERVICING THIS TYPE OF CLAMP, SUCH AS SPECIAL CLAMP TOOL (NUMBER 6094) (FIG. 27). SNAP-ON CLAMP TOOL (NUMBER HPC-20) MAY BE USED FOR LARGER CLAMPS. ALWAYS WEAR SAFETY GLASSES WHEN SERVICING CONSTANT TENSION CLAMPS.

CAUTION: A number or letter is stamped into the tongue of constant tension clamps (Fig. 28). If replacement is necessary, use only an original equipment clamp with matching number or letter.

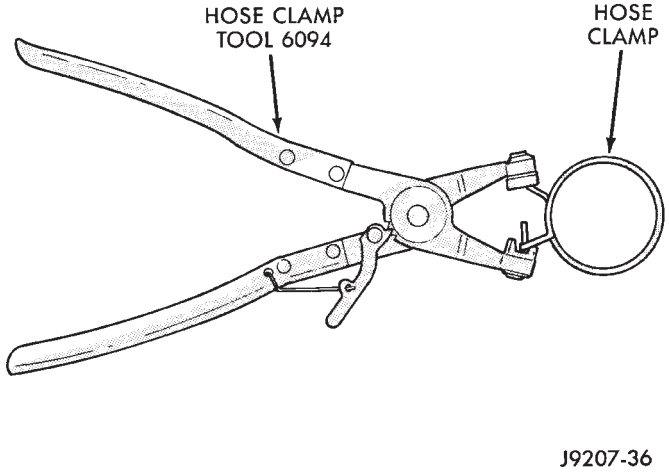

Fig. 27 Hose Clamp Tool—Typical

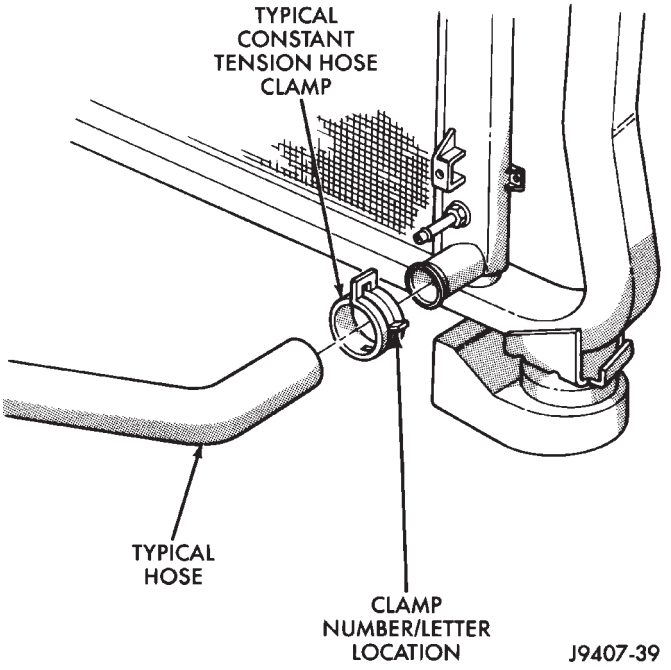

Fig. 28 Clamp Number/Letter Location

XJ MODELS WITH 2.5L 4-CYLINDER ENGINE

REMOVAL

(1) Disconnect negative battery cable at battery.

(2) Observe the previous **WARNINGS.** Remove radiator cap.

(3) Position drain pan under draincock. Open radiator draincock. Drain radiator.

(4) Remove radiator upper and lower hose clamps (Figs. 27 and 28). Remove hoses.

(5) Remove E-clip from alignment dowel at radiator lower mounting bracket (Fig. 29).

(6) Disconnect coolant reserve/overflow tank hose from radiator.

(7) Remove four radiator fan shroud mounting bolts (Fig. 29). Push shroud back against front of engine.

(8) If equipped, disconnect and plug automatic transmission fluid cooler lines. Refer to Group 21, Transmission for procedures.

(9) Remove two radiator top mounting bolts (Fig. 29).

(10) (a) If equipped with air conditioning, remove the radiator grille mounting screws and remove grill. Refer to Group 23, Body for procedures.

(b) If equipped, remove the air conditioning condenser-to-radiator mounting bolt. Use an open end wrench to remove bottom bolts (Fig. 30).

(11) Lift radiator straight up and out of vehicle. Take care not to damage radiator fins. When removing radiator, note position of the rubber seals located on the top, bottom and sides of radiator (Fig. 29). To prevent possible overheating, these seals must be installed to their original positions.

INSTALLATION

(1) Install radiator behind air conditioning condenser with bottom alignment dowel inserted into radiator lower mounting bracket (Fig. 29).

(2) Install E-clip to radiator alignment dowel (Fig. 29).

(3) Tighten the four condenser-to-radiator mounting bolts to 6.2 N·m (55 in. lbs.) torque.

(4) If removed, install radiator grille.

(5) Tighten radiator top mounting bolts to 6 N·m (55 in. lbs.) torque.

(6) If equipped, connect automatic transmission fluid cooler lines to radiator. Refer to Group 21, Transmission for procedures.

(7) Install the radiator fan shroud.

(8) Connect the coolant reserve/overflow tank hose.

(9) Connect radiator hoses and install hose clamps.

(10) Connect negative battery cable.

(11) Close the draincock.

(12) Fill cooling system with correct coolant.

(13) Install radiator cap.

(14) Check and adjust automatic transmission fluid level (if equipped).

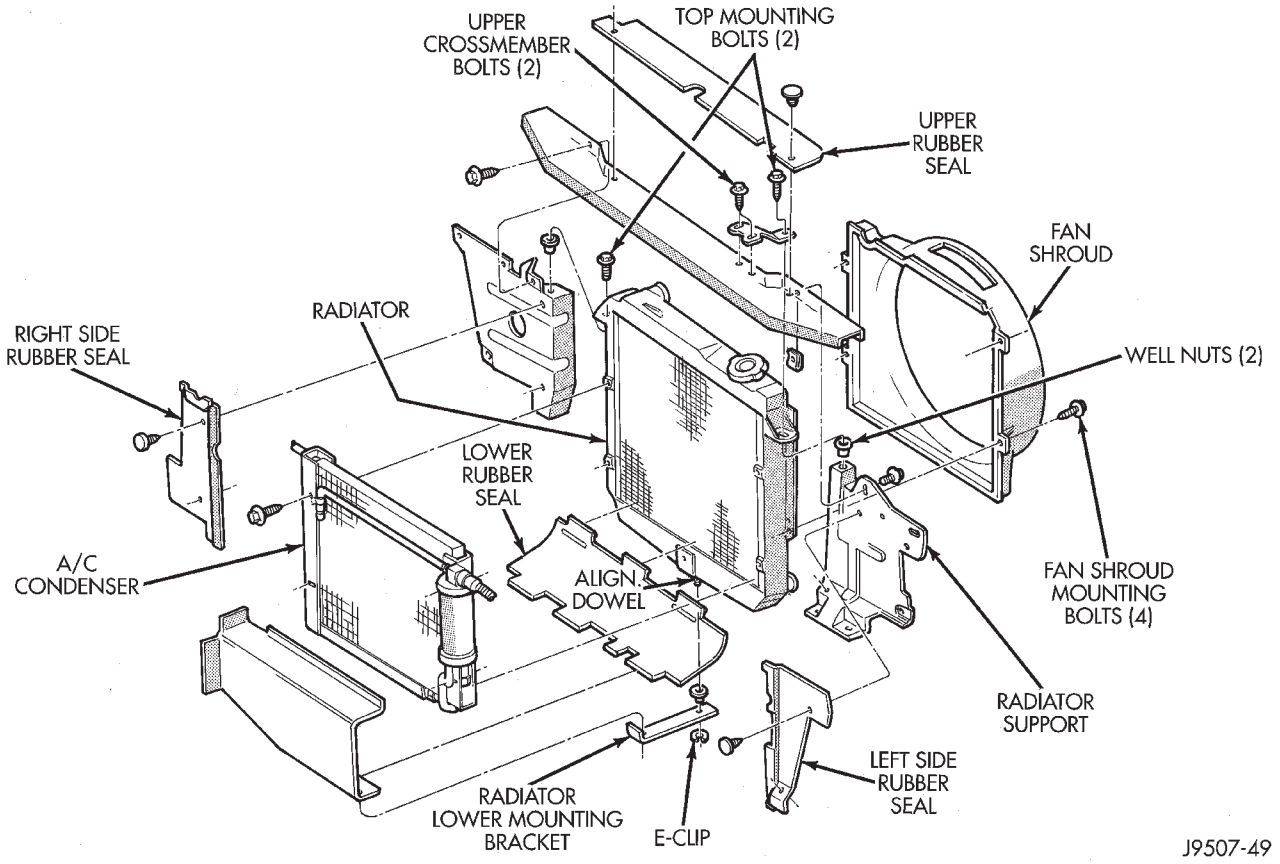

Fig. 29 Radiator Remove/Install—XJ Models—2.5L 4-Cylinder Engine

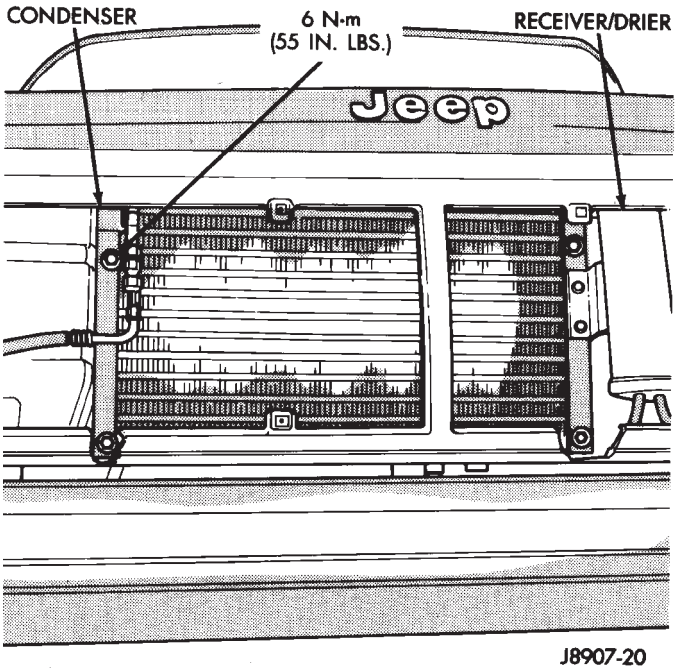

Fig. 30 Condenser Mounting Bolts—XJ Models—2.5L 4-Cylinder Engine—Typical

XJ MODELS WITH 4.0L 6-CYLINDER ENGINE

WARNING: DO NOT REMOVE THE CYLINDER BLOCK DRAIN PLUGS OR LOOSEN THE RADIATOR DRAINCOCK WITH THE SYSTEM HOT AND PRESSURIZED. SERIOUS BURNS FROM THE COOLANT CAN OCCUR.

DO NOT WASTE reusable coolant. If solution is clean, drain coolant into a clean container for reuse.

WARNING: CONSTANT TENSION HOSE CLAMPS ARE USED ON MOST COOLING SYSTEM HOSES. WHEN REMOVING OR INSTALLING, USE ONLY TOOLS DESIGNED FOR SERVICING THIS TYPE OF CLAMP, SUCH AS SPECIAL CLAMP TOOL (NUMBER 6094) (FIG. 27). SNAP-ON CLAMP TOOL (NUMBER HPC-20) MAY BE USED FOR LARGER CLAMPS. ALWAYS WEAR SAFETY GLASSES WHEN SERVICING CONSTANT TENSION CLAMPS.

CAUTION: A number or letter is stamped into the tongue of constant tension clamps (Fig. 28). If replacement is necessary, use only an original equipment clamp with matching number or letter.

REMOVAL

(1) Disconnect negative battery cable at battery.
(2) Observe the previous **WARNINGS.**
(3) Remove pressure cap.

(4) For access to radiator draincock, remove radiator grille mounting screws and remove grill. Refer to Group 23, Body for procedures.

(5) Attach one end of a 24 inch long X 1/4 inch ID hose to the radiator draincock. Put the other end into a clean container. Open draincock and drain radiator.

(6) If equipped, disconnect auxiliary electric cooling fan electrical connector (Fig. 31).

(7) If equipped, remove two electric cooling fan mounting bolts. Lift cooling fan straight up until alignment tabs at the bottom are clear of slots in bracket at bottom of radiator (Fig. 32).

(8) Remove the two mechanical (non-electrical) fan shroud mounting bolts. Lift shroud straight up until alignment tabs at the bottom are clear of slots in bracket at bottom of radiator (Fig. 32). Place shroud over mechanical fan.

(9) If equipped, disconnect and plug automatic transmission fluid cooler lines. Refer to Group 21, Transmissions for procedures. If equipped with remote transmission cooler, remove line to cooler from bracket at bottom of radiator.

(10) Disconnect radiator upper and lower hoses clamps (Figs. 27 and 28). Disconnect radiator upper and lower hoses.

(11) Mark the position of the hood latch striker on the radiator crossmember and remove hood latch striker.

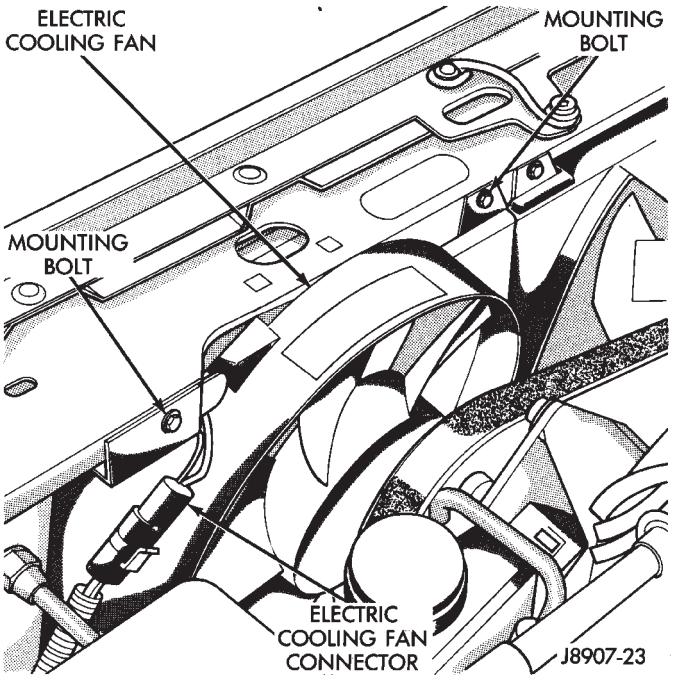

Fig. 31 Auxiliary Electric Cooling Fan Wiring Connector—Typical

(12) Remove two radiator upper crossmember-to-isolator nuts (Fig. 32).

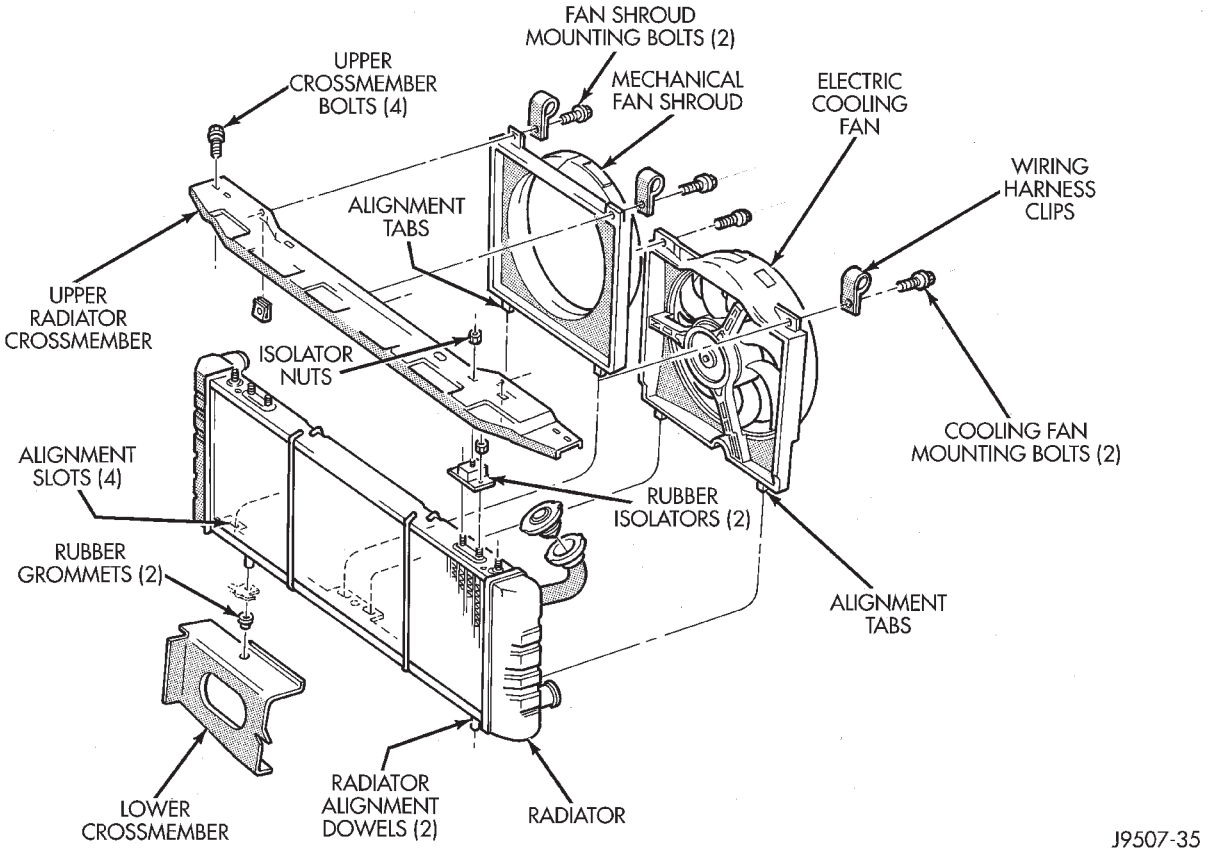

Fig. 32 Auxiliary Electric Cooling Fan and Fan Shroud—Typical

(13) Remove four radiator upper crossmember bolts (Fig. 32) and remove upper crossmember.

(14) If equipped with air conditioning, separate radiator from condenser by removing condenser-to-radiator mounting brackets (Fig. 33).

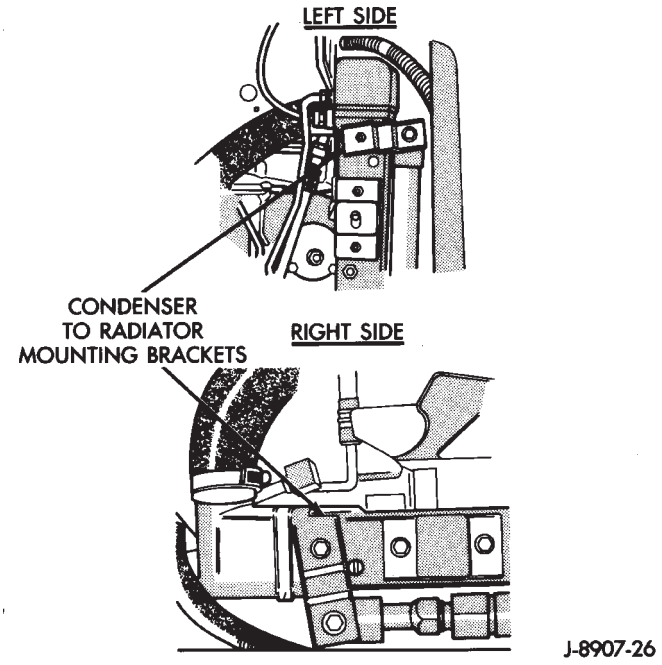

Fig. 33 Condenser-to-Radiator Mounting Brackets—XJ with 4.0L 6- Cylinder Engine

(15) Lift radiator straight up and out of engine compartment taking care not to damage fins.

INSTALLATION

The radiator is supplied with two alignment dowels (Figs. 32 or 34). They are located on the bottom tank and fit into rubber grommets in the radiator lower crossmember.

(1) Lower radiator into engine compartment. Position alignment dowels into rubber grommets in radiator lower crossmember (Figs. 32 or 34).

(2) If equipped with air conditioning, attach condenser to radiator with mounting brackets (Fig. 33).

(3) Install radiator upper crossmember and four mounting bolts.

(4) Install radiator upper crossmember-to-isolator nuts. Tighten nuts to 10 N·m (86 in. lbs.) torque. If isolator-to-radiator nuts had been removed, tighten them to 5 N·m (47 in. lbs.) torque.

(5) Install hood latch striker. Note previously marked position.

(6) Connect radiator upper and lower hoses.

(7) If equipped, connect automatic transmission fluid cooler lines. Refer to Group 21, Transmissions for procedures. If equipped with remote cooler, attach cooler line to bracket at bottom of radiator.

(8) Install electric cooling fan (if equipped). Insert alignment tabs at bottom of fan shroud into slots in bracket at bottom of radiator. Tighten mounting bolts to 3 N·m (31 in. lbs.) torque.

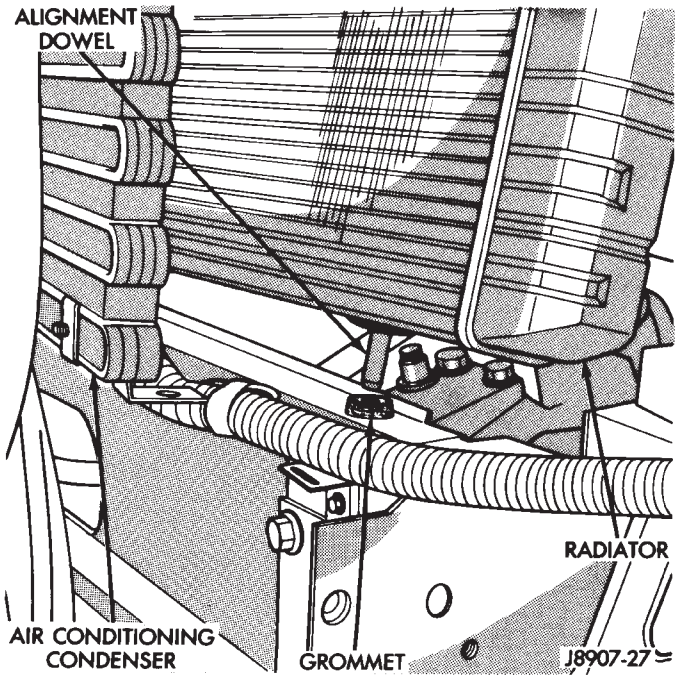

Fig. 34 Radiator Installation—XJ Models with 4.0L 6-Cylinder Engine

(9) Connect electric cooling fan electrical connector.

(10) Install mechanical cooling fan shroud. Insert alignment tabs at bottom of shroud into slots in bracket at bottom of radiator. Tighten mounting bolts to 3 N·m (31 in. lbs.) torque.

(11) Close radiator draincock.

(12) Install grille.

(13) Connect negative battery cable.

(14) Fill cooling system with correct coolant. Refer to the Coolant section of this group.

(15) Install pressure cap.

(16) Check and adjust automatic transmission fluid level (if equipped).

YJ MODELS

WARNING: DO NOT REMOVE THE CYLINDER BLOCK DRAIN PLUGS OR LOOSEN THE RADIATOR DRAINCOCK WITH THE SYSTEM HOT AND PRESSURIZED. SERIOUS BURNS FROM THE COOLANT CAN OCCUR.

DO NOT WASTE reusable coolant. If solution is clean, drain coolant into a clean container for reuse.

WARNING: CONSTANT TENSION HOSE CLAMPS ARE USED ON MOST COOLING SYSTEM HOSES. WHEN REMOVING OR INSTALLING, USE ONLY TOOLS DESIGNED FOR SERVICING THIS TYPE OF CLAMP, SUCH AS SPECIAL CLAMP TOOL (NUMBER 6094) (FIG. 27). SNAP-ON CLAMP TOOL (NUMBER HPC-20) MAY BE USED FOR LARGER CLAMPS. AL-

WAYS WEAR SAFETY GLASSES WHEN SERVICING CONSTANT TENSION CLAMPS.

CAUTION: A number or letter is stamped into the tongue of constant tension clamps (Fig. 28). If replacement is necessary, use only an original equipment clamp with matching number or letter.

REMOVAL

(1) Disconnect negative battery cable at battery.

(2) Observe the previous **WARNINGS.** Remove the radiator cap.

(3) Position drain pan under draincock. Open radiator draincock and drain radiator.

(4) Remove radiator upper and lower hose clamps (Figs 27 and 28). Remove radiator hoses.

(5) Disconnect coolant reserve/overflow tank hose from radiator.

(6) Remove the four fan shroud mounting bolts (Fig. 35). On some models the power steering fluid reservoir tank is attached to the side of the fan shroud. Tie the reservoir back to prevent spillage. Position the fan shroud back over the fan blades.

(7) If equipped, disconnect and plug automatic transmission fluid cooler lines.

(8) Remove six radiator mounting bolts. Position the front axle vent hose (Fig. 35) to the side.

(9) Lift radiator straight up and out of vehicle taking care not to damage radiator fins.

When removing radiator, note position of the rubber seals located on the top and bottom of radiator (figure 35 on certain models only). To prevent possible overheating, these seals must be installed to their original positions.

INSTALLATION

(1) Position the radiator. Install and tighten the six mounting bolts (Fig. 35) to 8 N·m (72 in. lbs.) torque.

(2) Close radiator draincock.

(3) Position fan shroud and power steering reservoir tank (if equipped). Install and tighten four mounting bolts to 8 N·m (72 in. lbs.) torque.

(4) If equipped, remove plugs and connect automatic transmission fluid cooler lines.

(5) Connect radiator hoses and install hose clamps.

(6) Connect negative battery cable.

(7) Fill cooling system with correct coolant. Refer to the Coolant section of this group.

(8) Connect reserve/overflow tank hose.

(9) Install radiator cap.

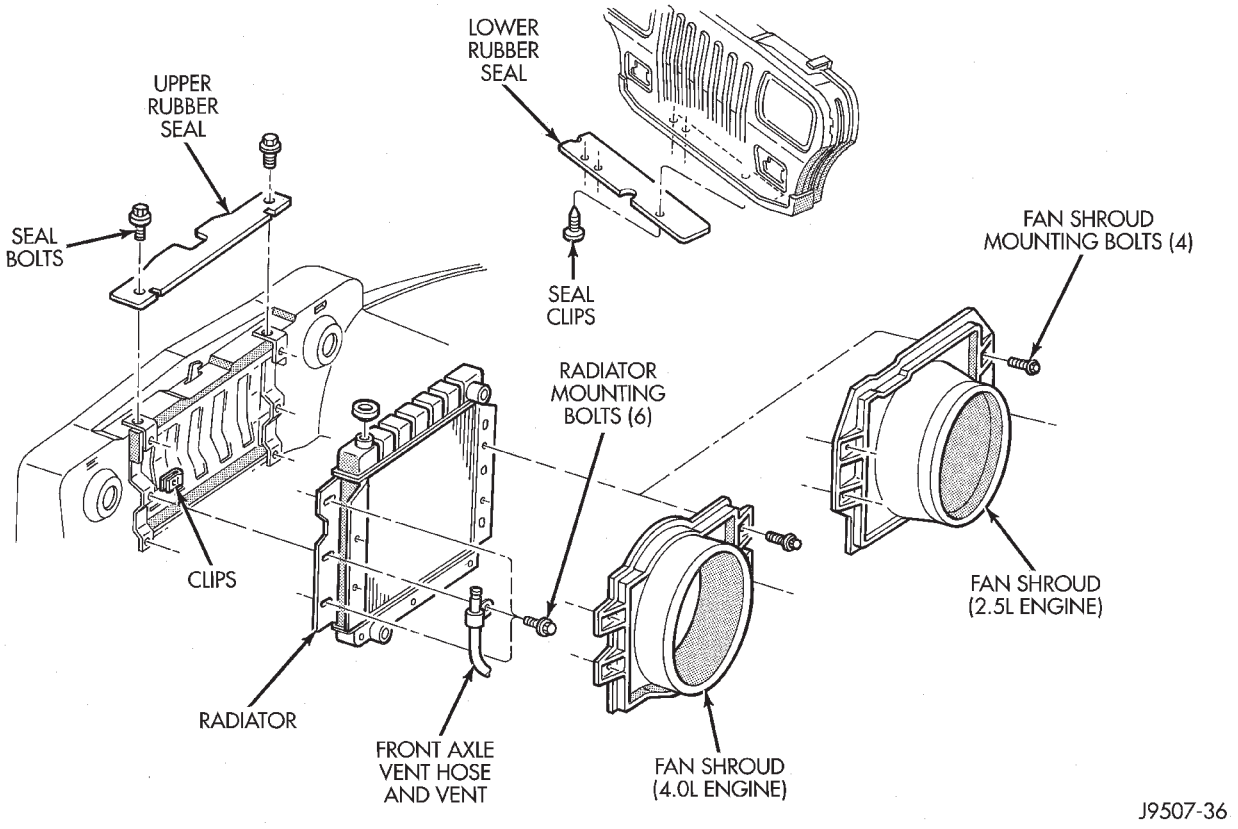

Fig. 35 Radiator—Remove/Install—YJ Models

(10) Check and adjust automatic transmission fluid level (if equipped).

COOLING SYSTEM HOSES

Rubber hoses route coolant to and from the radiator, intake manifold and heater core. All XJ models equipped with air conditioning have a coolant control valve. This is located in-line with the heater core inlet and outlet hoses. It controls coolant flow to the heater core when the air conditioning system is in operation.

Radiator lower hoses are spring-reinforced to prevent collapse from water pump suction at moderate and high engine speeds.

WARNING: CONSTANT TENSION HOSE CLAMPS ARE USED ON MOST COOLING SYSTEM HOSES. WHEN REMOVING OR INSTALLING, USE ONLY TOOLS DESIGNED FOR SERVICING THIS TYPE OF CLAMP, SUCH AS SPECIAL CLAMP TOOL (NUMBER 6094) (FIG. 36). SNAP-ON CLAMP TOOL (NUMBER HPC-20) MAY BE USED FOR LARGER CLAMPS. ALWAYS WEAR SAFETY GLASSES WHEN SERVICING CONSTANT TENSION CLAMPS.

CAUTION: A number or letter is stamped into the tongue of constant tension clamps (Fig. 37). If replacement is necessary, use only an original equipment clamp with matching number or letter.

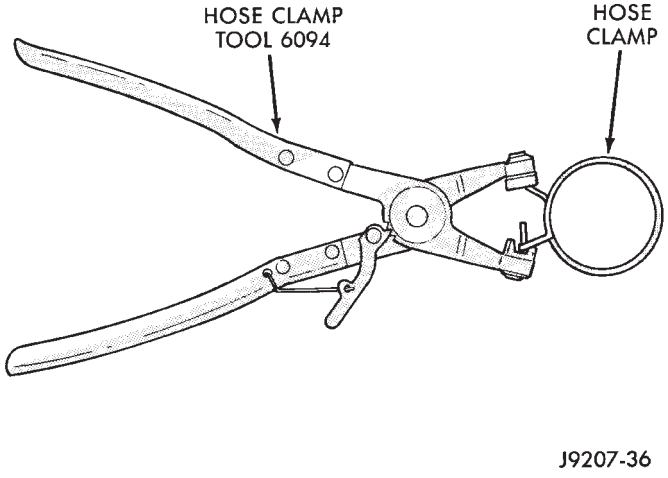

Fig. 36 Hose Clamp Tool—Typical

Inspect the hoses at regular intervals. Replace hoses that are cracked, feel brittle when squeezed, or swell excessively when the system is pressurized.

For all vehicles: In areas where specific routing clamps are not provided, be sure that hoses are positioned with sufficient clearance. Check clearance from exhaust manifolds and pipe, fan blades, drive belts and sway bars. Improperly positioned hoses can be damaged, resulting in coolant loss and engine overheating.

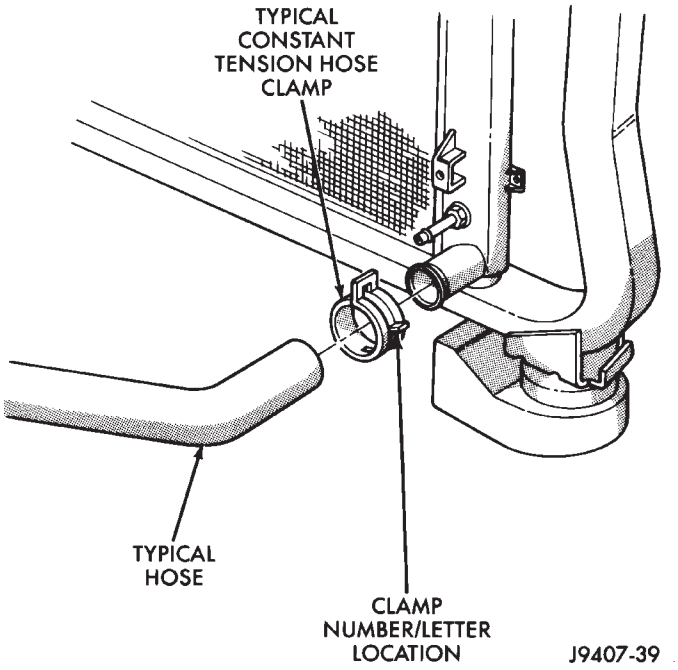

Fig. 37 Clamp Number/Letter Location

Ordinary worm gear type hose clamps (when equipped) can be removed with a straight screwdriver or a hex socket. **To prevent damage to hoses or clamps, the hose clamps should be tightened to 4 N·m (34 in. lbs.) torque. Do not over tighten hose clamps.**

When performing a hose inspection, inspect the radiator lower hose for proper position and condition of the internal spring.

COOLING SYSTEM FANS

Also refer to either the Viscous Fan Drive and/or the Auxiliary Electric Cooling Fan—XJ Models With 4.0L Engine sections for additional information.

All models are equipped with a mechanical temperature controlled fan. This thermal viscous fan drive (Fig. 38) is a torque-and-temperature-sensitive clutch unit. It automatically increases or decreases fan speed to provide proper engine cooling. XJ models equipped with a 4.0L 6-cylinder engine may also have an auxiliary electrical cooling fan. This is with models that have air conditioning and/or heavy duty cooling.

REMOVAL

Some engines have the mechanical fan/viscous fan drive assembly mounted directly to the water pump hub (Fig. 38). It may also be mounted to a hub/bearing attached to an aluminum bracket on the right front side of engine (Fig. 39).

(1) Loosen but do not remove at this time, the four fan hub mounting nuts (Figs. 38 or 39).

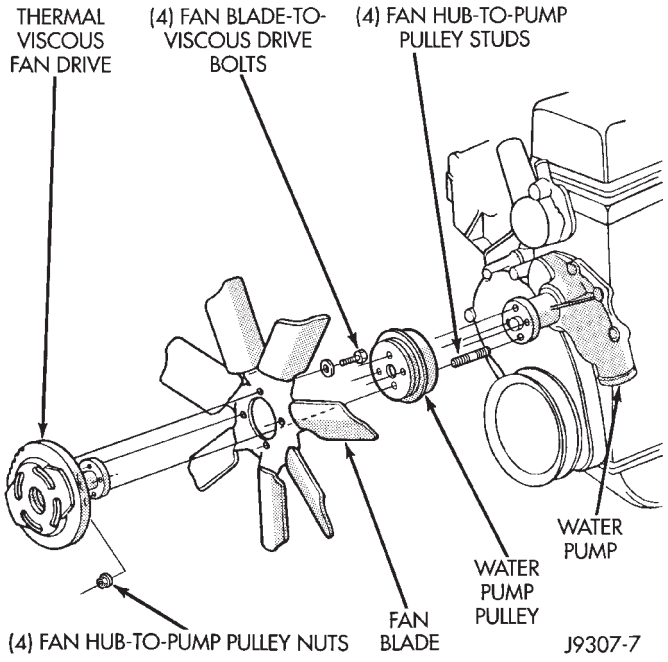

Fig. 38 Water Pump Mounted Cooling Fan

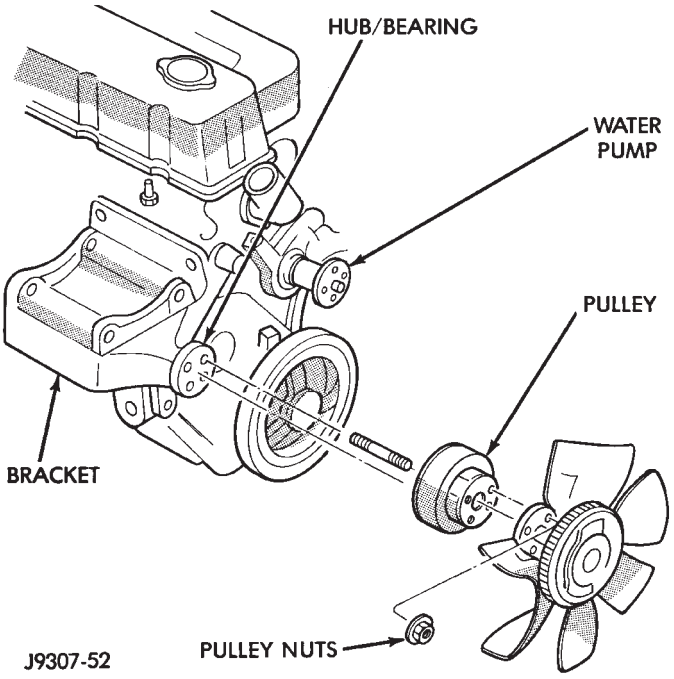

Fig. 39 Bracket Mounted Cooling Fan

(2) Remove accessory serpentine drive belt. Refer to Belt Service in the Engine Accessory Drive Belt section of this group.

(3) Some models with certain engines may require the removal of the fan shroud to remove the viscous fan drive. The fan shroud and fan blade/viscous fan drive should be removed from the vehicle as one assembly.

(4) Remove four fan hub mounting nuts (Figs. 38 or 39) and remove fan/viscous fan drive assembly from vehicle.

After removing fan blade/viscous fan drive assembly, **do not** place thermal viscous fan drive in horizontal position. If stored horizontally, silicone fluid in viscous fan drive could drain into its bearing assembly and contaminate lubricant.

FAN BLADE INSPECTION

The fan blades cannot be repaired. If fan is damaged, it must be replaced. Inspect fan as follows:

(1) Remove fan blade and viscous fan drive as an assembly from the engine. Refer to preceding Removal procedure.

(2) Remove fan blade assembly from viscous fan drive unit (four bolts).

(3) Lay fan on a flat surface with leading edge facing down. With tip of blade touching flat surface, replace fan if clearance between opposite blade and surface is greater than 2.0 mm (.090 inch). Rocking motion of opposite blades should not exceed 2.0 mm (.090 inch). Test all blades in this manner.

WARNING: DO NOT ATTEMPT TO BEND OR STRAIGHTEN FAN BLADES IF NOT WITHIN SPECIFICATIONS.

(4) Inspect fan assembly for cracks, bends, loose rivets or broken welds. Replace fan if any damage is found.

CAUTION: If fan blade assembly is replaced because of mechanical damage, water pump and viscous fan drive should also be inspected. These components could have been damaged due to excessive vibration.

INSTALLATION

(1) Assemble fan blade to viscous fan drive. Tighten mounting bolts to 27 N·m (20 ft. lbs.) torque.

(2) Position mounting flange of fan blade/viscous fan drive assembly onto hub. Install four nuts and tighten to 24 N·m (18 ft. lbs.) torque. Tighten the first two nuts 180 degrees apart. Then tighten last two nuts.

CAUTION: When installing a serpentine accessory drive belt, the belt MUST be routed correctly. If not, the engine may overheat due to the water pump rotating in the wrong direction. Refer to appropriate Engine Accessory Drive Belt Schematic in this group for correct belt routing.

(3) Install accessory drive belts. Tension belts to specifications. Refer to the Specifications section at the end of this group.

VISCOUS FAN DRIVE

DESCRIPTION AND OPERATION

Also refer to the previous section on Cooling System Fans.

The thermal viscous fan drive (Fig. 38 or 39) is a silicone-fluid-filled coupling used to connect the fan blades to either the engine or the water pump shaft. The coupling allows the fan to be driven in a normal manner. This is done at low engine speeds while limiting the top speed of the fan to a predetermined maximum level at higher engine speeds.

A thermostatic bimetallic spring coil is located on the front face of the viscous fan drive unit (a typical viscous unit is shown in figure 40). This spring coil reacts to the temperature of the radiator discharge air. It engages the viscous fan drive for higher fan speed if the air temperature from the radiator rises above a certain point. Until additional engine cooling is necessary, the fan will remain at a reduced rpm regardless of engine speed.

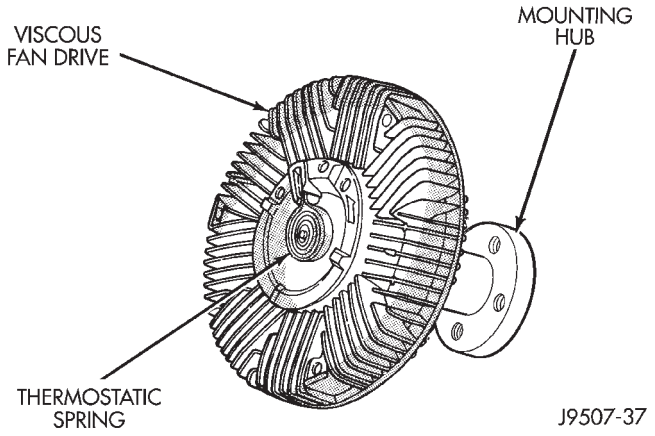

Fig. 40 Typical Viscous Fan Drive

Only when sufficient heat is present, will the viscous fan drive engage. This is when the air flowing through the radiator core causes a reaction to the bimetallic coil. It then increases fan speed to provide the necessary additional engine cooling.

Once the engine has cooled, the radiator discharge temperature will drop. The bimetallic coil again reacts and the fan speed is reduced to the previous disengaged speed.

CAUTION: Engines equipped with serpentine drive belts have reverse rotating fans and viscous fan drives. They are marked with the word REVERSE to designate their usage. Installation of the wrong fan or viscous fan drive can result in engine overheating.

CAUTION: If the viscous fan drive is replaced because of mechanical damage, the cooling fan blades should also be inspected. Inspect for fatigue cracks, loose blades, or loose rivets that could have resulted from excessive vibration. Replace fan blade assembly if any of these conditions are found. Also inspect water pump bearing and shaft assembly for any related damage due to a viscous fan drive malfunction.

NOISE

It is normal for fan noise to be louder (roaring) when:

- The underhood temperature is above the engagement point for the viscous drive coupling. This may occur when ambient (outside air temperature) is very high.
- Engine loads and temperatures are high such as when towing a trailer.
- Cool silicone fluid within the fan drive unit is being redistributed back to its normal disengaged (warm) position. This can occur during the first 15 seconds to one minute after engine start-up on a cold engine.

LEAKS

Viscous fan drive operation is not affected by small oil stains near the drive bearing. If leakage appears excessive, replace the fan drive unit.

TESTING

If the fan assembly free-wheels without drag (the fan blades will revolve more than five turns when spun by hand), replace the fan drive. This spin test must be performed when the engine is cool.

For the following test, the cooling system must be in good condition. It also will ensure against excessively high coolant temperature.

WARNING: BE SURE THAT THERE IS ADEQUATE FAN BLADE CLEARANCE BEFORE DRILLING.

(1) Drill a 3.18-mm (1/8-in) diameter hole in the top center of the fan shroud.

(2) Obtain a dial thermometer with an 8 inch stem (or equivalent). It should have a range of -18°-to-105°C (0°-to-220° F). Insert thermometer through the hole in the shroud. Be sure that there is adequate clearance from the fan blades.

(3) Connect a tachometer and an engine ignition timing light (timing light is to be used as a strobe light).

(4) Block the air flow through the radiator. Secure a sheet of plastic in front of the radiator (or air conditioner condenser). Use tape at the top to secure the plastic and be sure that the air flow is blocked.

(5) Be sure that the air conditioner (if equipped) is turned off.

WARNING: USE EXTREME CAUTION WHEN THE ENGINE IS OPERATING. DO NOT STAND IN A DIRECT LINE WITH THE FAN. DO NOT PUT YOUR HANDS NEAR THE PULLEYS, BELTS OR FAN. DO NOT WEAR LOOSE CLOTHING.

(6) Start the engine and operate at 2400 rpm. Within ten minutes the air temperature (indicated on the dial thermometer) should be up to 88° C (190° F). Fan drive **engagement** should have started to occur at between 74° to 82° C (165° to 180° F). Engagement is distinguishable by a definite **increase** in fan flow noise (roaring). The timing light also will indicate an increase in the speed of the fan.

(7) When the air temperature reaches 88° C (190° F), remove the plastic sheet. Fan drive **disengagement** should have started to occur at between 57° to 79° C (135° to 175° F). A definite **decrease** of fan flow noise (roaring) should be noticed. If not, replace the defective viscous fan drive unit.

VISCOUS FAN DRIVE REMOVAL/INSTALLATION

Refer to the previous section on Cooling System Fan for removal and installation procedures of the viscous drive unit.

Viscous Fan Drive Fluid Pump Out Requirement: After installing a **new** viscous fan drive, bring the engine speed up to approximately 2000 rpm and hold for approximately two minutes. This will ensure proper fluid distribution within the drive.

AUXILIARY ELECTRIC COOLING FAN—XJ MODELS WITH 4.0L 6-CYLINDER ENGINE

OPERATION

XJ models equipped with a 4.0L 6-cylinder engine may also have an auxiliary electrical cooling fan. This is with models that have air conditioning and/or heavy duty cooling. The fan is controlled by the cooling fan relay, which is located in the power distribution center (PDC). For the location of relay within the PDC (Fig. 41), refer to the label on PDC cover.

When coolant temperature is above 88°C (190°F), the powertrain control module (PCM) provides a ground path for the fan relay. This ground is provided through pin/connector #31 of the PCM 60-way connector. Battery voltage is then applied to the fan through the relay. When coolant temperature is below 88°C (190°F), the PCM opens the ground path to the relay. This will prevent the cooling fan from being energized.

Whenever the air conditioning is operated, the PCM engages the auxiliary cooling fan. It provides a ground path to the cooling fan relay. This ground is provided through pin/connector #31 of the PCM 60-way connector.

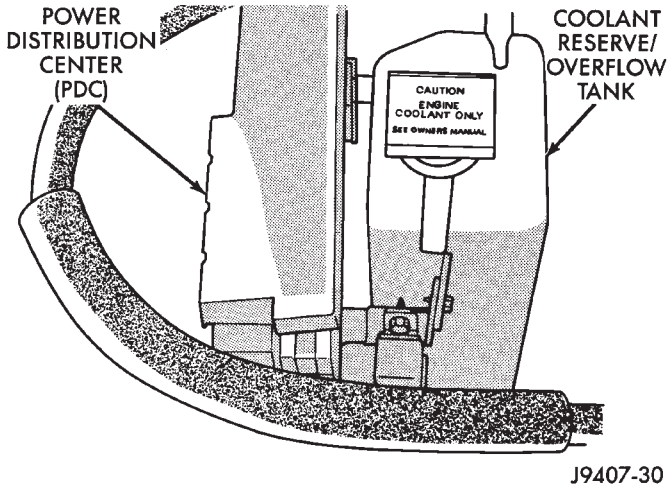

Fig. 41 PDC—XJ Models

DIAGNOSIS AND RELAY TESTING

The powertrain control module (PCM) will enter a diagnostic trouble code (DTC) number 35 in memory if it detects a problem in the auxiliary cooling fan relay or circuit. This will be read as a flashing signal at the instrument panel mounted Malfunction Indicator Lamp (displayed on the instrument panel as the CHECK ENGINE lamp—figure 42). Refer to On-Board Diagnostics in Group 14, Fuel Systems for information on accessing a DTC.

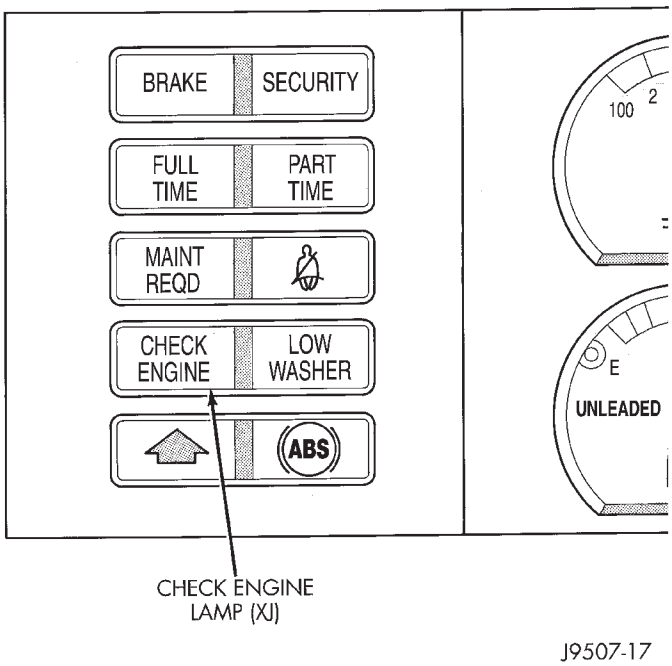

Fig. 42 Check Engine Lamp—XJ Models—Typical

The DTC can also be accessed through the DRB scan tool. Refer to the appropriate Powertrain Diag-

nostic Procedures manual for diagnostic information and operation of the DRB scan tool.

To test operation of the fan relay only, refer to Relays—Operation/Testing. This can be found in Group 14, Fuel Systems.

REMOVAL

The auxiliary cooling fan is attached to the radiator upper crossmember behind the radiator.

(1) Remove the two fan mounting bolts from radiator upper crossmember (Fig. 43).

(2) Disconnect the electric fan connector.

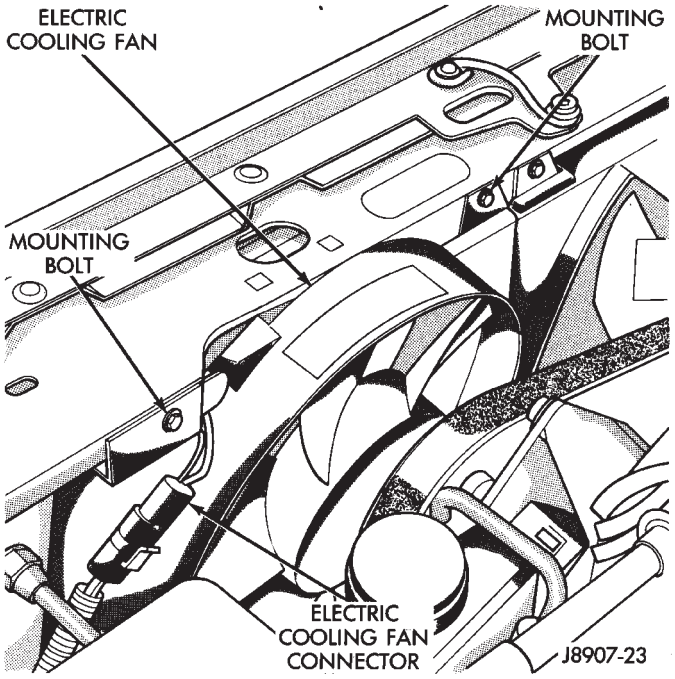

Fig. 43 Auxiliary Cooling Fan—Remove/Install—Typical

(3) Lift fan straight up and out of vehicle.

INSTALLATION

(1) Align lower retaining tabs of fan shroud with slots in bracket at bottom of radiator. Push fan down into position.

(2) Tighten the mounting bolts to 4 N·m (31 in. lbs.) torque.

(3) Connect auxiliary cooling fan electrical connector.

TRANSMISSION OIL COOLERS

WATER-TO-OIL COOLER

All models equipped with an automatic transmission are equipped with a transmission oil cooler mounted internally within the radiator tank. This internal cooler is supplied as standard equipment on all models equipped with an automatic transmission.

Transmission oil is cooled when it passes through this separate cooler. In case of a leak in the internal radiator mounted transmission oil cooler, engine coolant may become mixed with transmission fluid or transmission fluid may enter engine cooling system. Both cooling system and transmission should be drained and inspected if the internal radiator mounted transmission cooler is leaking.

Also refer to the section on Transmission Air-to-Oil Coolers. This auxiliary air-to-oil cooler is an option on most engine packages.

REPLACING WATER-TO-OIL COOLER IN RADIATOR SIDE TANK

The internal transmission oil cooler located within the radiator is not serviceable. If it requires service, the radiator must be replaced.

Once the repaired or replacement radiator has been installed, fill the cooling system and inspect for leaks. Refer to the Refilling Cooling System and Testing Cooling System For Leaks sections in this group. If the transmission operates properly after repairing the leak, drain the transmission and remove the transmission oil pan. Inspect for sludge and/or rust. Inspect for a dirty or plugged inlet filter. If none of these conditions are found, the transmission and torque convertor may not require reconditioning. Refer to Group 21 for automatic transmission servicing.

AIR-TO-OIL COOLER

An auxiliary air-to-oil transmission oil cooler is available with most engine packages.

On XJ and YJ models, the cooler is located in front of the radiator or A/C condenser (if equipped) and behind the grill (Figs. 44, 45 or 46). It is mounted to the front frame crossmember.

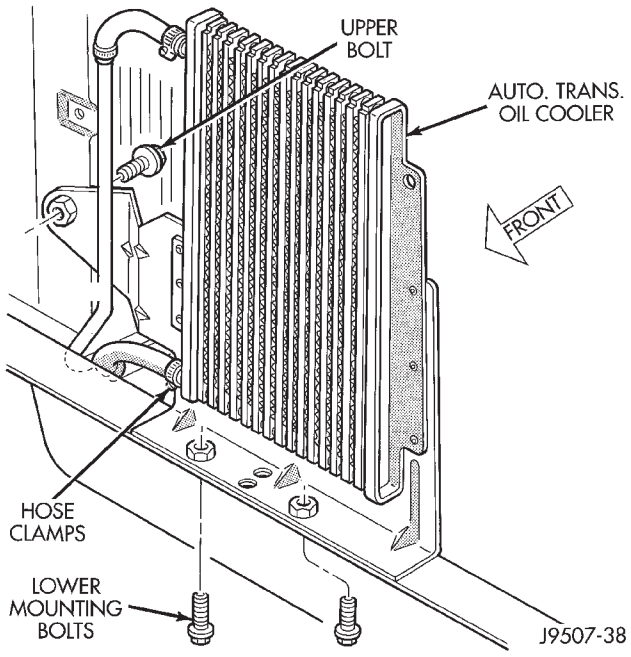

Fig. 44 Auxiliary Air-To-Oil Cooler—YJ Models

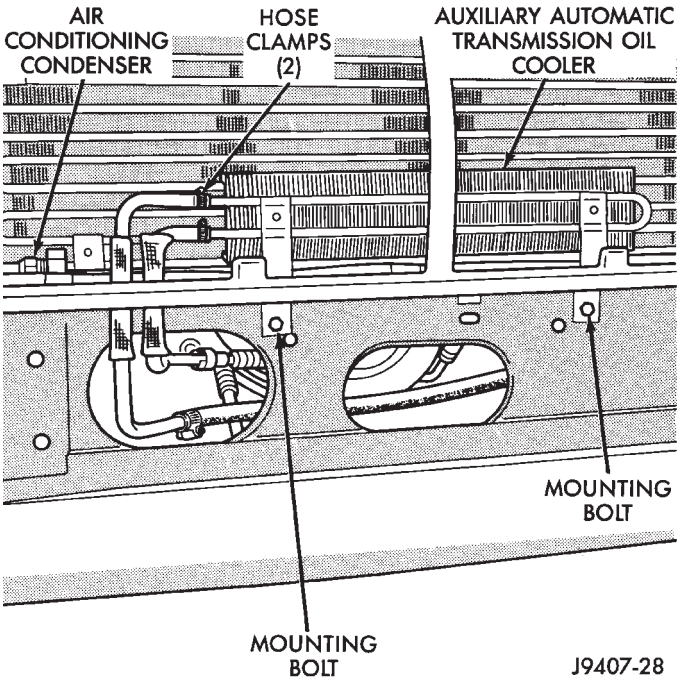

Fig. 45 Auxiliary Air-To-Oil Cooler—XJ Models—4.0L Engine

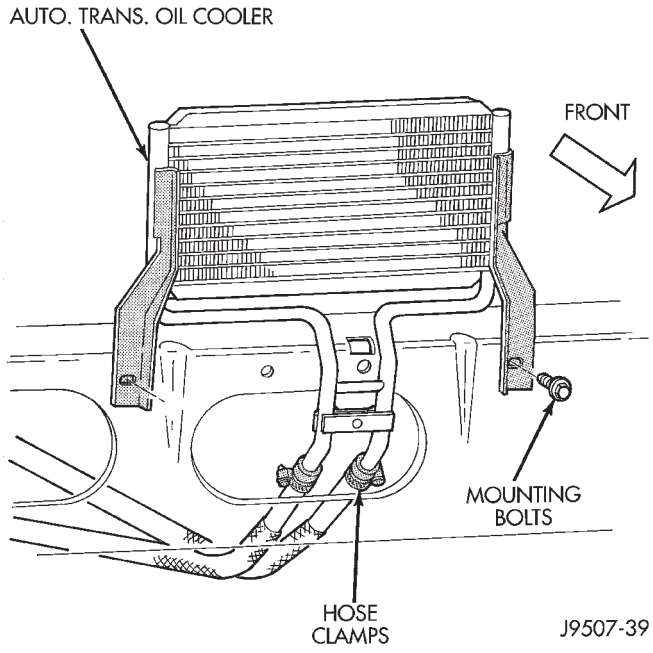

Fig. 46 Auxiliary Air-To-Oil Cooler—XJ Models—2.5L Engine

The auxiliary oil coolers on all models operate in conjunction with the internal radiator mounted main oil cooler. The transmission oil is routed through the main cooler first, then the auxiliary cooler, before returning to the transmission.

REMOVAL/INSTALLATION—XJ MODELS

(1) Remove the grill mounting screws and remove the grill. Refer to Group 23, Body for procedures.

(2) Place a drain pan below the transmission oil cooler.

(3) Remove the two hose clamps at oil cooler inlet and outlet tubes (Figs. 45 or 46).

(4) Remove the two oil cooler mounting bolts (Figs. 45 or 46).

(5) Remove the oil cooler from vehicle.

(6) Reverse the preceding operation for installation. Tighten the two clamps 2 N·m (15 in. lbs.) torque. Tighten mounting bolts to 8 N·m (72 in. lbs.) torque.

REMOVAL/INSTALLATION—YJ MODELS

(1) Remove fan shroud and radiator. Refer to the Radiators section for procedures.

(2) Remove the air conditioning filter/drier mounting bolts.

WARNING: BEFORE PROCEEDING WITH THE NEXT STEP, BE SURE TO WEAR SAFETY GLASSES. THE A/C SYSTEM IS UNDER PRESSURE EVEN WITH THE ENGINE OFF.

(3) Remove the A/C condenser mounting bolts (Fig. 47).

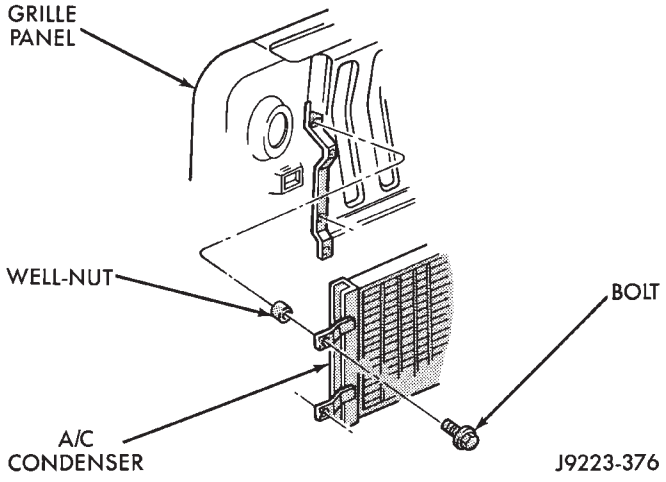

Fig. 47 Condenser Mounting Bolts—YJ Models

(4) Carefully tilt the A/C condenser rearward for access to the auxiliary transmission oil cooler.

(5) Place a drain pan below the oil cooler.

(6) Remove the two hose clamps at oil cooler inlet and outlet tubes (Fig. 44).

(7) Remove the three oil cooler mounting bolts (Fig. 44).

(8) Remove the oil cooler from vehicle.

(9) Reverse the preceding operation for installation. Tighten the two clamps 2 N·m (15 in. lbs.) torque. Tighten mounting bolts to 8 N·m (72 in. lbs.) torque.

ENGINE ACCESSORY DRIVE BELTS

INDEX

page

Automatic Belt Tensioner—XJ Models with Right Hand Drive 42
Belt Diagnosis 38
Belt Schematics 38
Belt Service—Except Right Hand Drive 40
Belt Service—XJ Models with Right Hand Drive . . . 42
Belt Tension Specifications 38
Belt Tension—Except Right Hand Drive (RHD) 38
Belt Tension—Right Hand Drive (RHD) 38
General Information 38

GENERAL INFORMATION

CAUTION: When installing a serpentine accessory drive belt, the belt MUST be routed correctly. If not, the engine may overheat due to water pump rotating in wrong direction. Refer to the appropriate engine Belt Schematic in this group for the correct belt routing. Or, refer to the Belt Routing Label located in the engine compartment.

BELT DIAGNOSIS

When diagnosing serpentine accessory drive belts, small cracks that run across the ribbed surface of the belt from rib to rib (Fig. 1), are considered normal. These are not a reason to replace the belt. However, cracks running along a rib (not across) are **not** normal. Any belt with cracks running along a rib must be replaced (Fig. 1). Also replace the belt if it has excessive wear, frayed cords or severe glazing.

Refer to the Serpentine Drive Belt Diagnosis charts for further belt diagnosis.

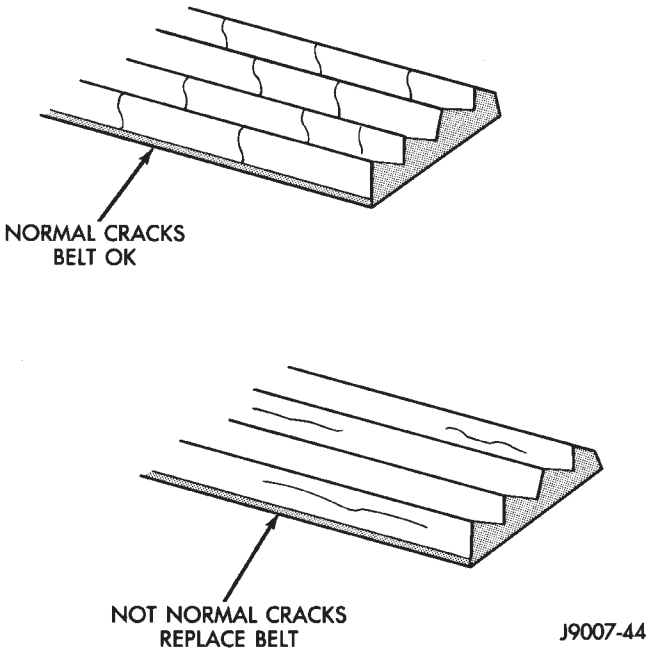

Fig. 1 Serpentine Belt Wear Patterns

BELT TENSION—EXCEPT RIGHT HAND DRIVE (RHD)

Correct drive belt tension is required to ensure optimum performance of the belt driven engine accessories. There are different types of adjustment gauges for checking either a serpentine or a V-type belt. Refer to the instructions supplied with the gauge. Use the correct gauge when checking belt tension. Place gauge in the middle of the section of belt being tested (between two pulleys) to check tension (Figs. 2, 3, 4 or 5). Do not allow the gauge (or gauge adapter) to contact anything but the belt.

BELT TENSION—RIGHT HAND DRIVE (RHD)

XJ MODELS WITH 4.0L 6-CYLINDER ENGINE

It is not necessary to adjust belt tension on RHD vehicles if equipped with a 4.0L 6-cylinder engine. The engine is equipped with an automatic belt tensioner (Fig. 7). The tensioner maintains correct belt tension at all times. **Due to the use of this belt tensioner, DO NOT attempt to use a belt tension gauge on this engine.**

BELT TENSION SPECIFICATIONS

Refer to the Specifications section at the end of this group.

BELT SCHEMATICS

The belt routing schematics are published from the latest information available at the time of publication. **If anything differs between these schematics and the Belt Routing Label, use the schematics on Belt Routing Label.** This label is located in the engine compartment.

Refer to figures 2, 3, 4 or 5 for proper belt routing on vehicles with conventional left hand drive. Refer to figure 6 for proper belt routing on vehicles with right hand drive (RHD). Or, refer to the Belt Routing Label located in the vehicle engine compartment.

SERPENTINE DRIVE BELT DIAGNOSIS

CONDITION	POSSIBLE CAUSES	CORRECTION
RIB CHUNKING (ONE OR MORE RIBS HAS SEPARATED FROM BELT BODY	1. Foreign objects imbedded in pulley grooves. 2. Installation damage.	1. Remove foreign objects from pulley grooves. Replace belt. 2. Replace belt.
RIB OR BELT WEAR	1. Pulley(s) misaligned. 2. Abrasive environment. 3. Rusted pulley(s). 4. Sharp or jagged pulley groove tips. 5. Rubber deteriorated.	1. Align pulley(s). 2. Clean pulley(s). Replace belt if necessary. 3. Clean rust from pulley(s). 4. Replace pulley. 5. Replace belt.
LONGITUDINAL BELT CRACKING (CRACKS BETWEEN TWO RIBS)	1. Belt has mistracked from pulley groove. 2. Pulley groove tip has worn away rubber to tensile member.	1. Replace belt. 2. Replace belt.
BELT SLIPS	1. Belt slipping because of insufficient tension. 2. Belt or pulley subjected to substance (belt dressing, oil, ethylene glycol) that has reduced friction. 3. Driven component bearing failure. 4. Belt glazed and hardened from heat and excessive slippage.	1. Adjust tension. 2. Replace belt and clean pulleys. 3. Replace faulty component bearing. 5. Replace belt.
"GROOVE JUMPING" (BELT DOES NOT MAINTAIN CORRECT POSITION ON PULLEY)	1. Belt tension either too high or too low. 2. Pulley(s) not within design tolerance. 3. Foreign object(s) in grooves. 4. Pulley misalignment. 5. Belt cordline is broken.	1. Adjust belt tension. 2. Replace pulley(s). 3. Remove foreign objects from grooves. 4. Align component. 5. Replace belt.
BELT BROKEN (NOTE: IDENTIFY AND CORRECT PROBLEM BEFORE NEW BELT IS INSTALLED)	1. Excessive tension. 2. Tensile member damaged during belt installation. 3. Severe misalignment. 4. Bracket, pulley, or bearing failure.	1. Replace belt and adjust tension to specification. 2. Replace belt. 3. Align pulley(s). 4. Replace defective component and belt.
NOISE (OBJECTIONAL SQUEAL, SQUEAK, OR RUMBLE IS HEARD OR FELT WHILE DRIVE BELT IS IN OPERATION)	1. Belt slippage. 2. Bearing noise. 3. Belt misalignment. 4. Belt-to-pulley mismatch.	1. Adjust belt. 2. Locate and repair. 3. Align belt/pulley(s). 4. Install correct belt.

J9507-25

SERPENTINE DRIVE BELT DIAGNOSIS (CONT.)

CONDITION	POSSIBLE CAUSES	CORRECTION
NOISE (OBJECTIONAL SQUEAL, SQUEAK, OR RUMBLE IS HEARD OR FELT WHILE DRIVE BELT IS IN OPERATION (Continued)	5. Driven component induced vibration. 6. System resonant frequency induced vibration.	5. Locate defective driven component and repair. 6. Vary belt tension within specifications. Replace belt.
TENSION SHEETING FABRIC FAILURE (WOVEN FABRIC ON OUTSIDE, CIRCUMFERENCE OF BELT HAS CRACKED OR SEPARATED FROM BODY OF BELT)	1. Tension sheeting contacting stationary object. 2. Excessive heat causing woven fabric to age. 3. Tension sheeting splice has fractured.	1. Correct rubbing condition. 2. Replace belt. 3. Replace belt.
CORD EDGE FAILURE (TENSILE MEMBER EXPOSED AT EDGES OF BELT OR SEPARATED FROM BELT BODY)	1. Excessive tension. 2. Belt contacting stationary object. 3. Pulley(s) out of tolerance. 4. Insufficient adhesion between tensile member and rubber matrix.	1. Adjust belt tension. 2. Correct as necessary. 3. Replace pulley. 4. Replace belt and adjust tension to specifications.

J9507-26

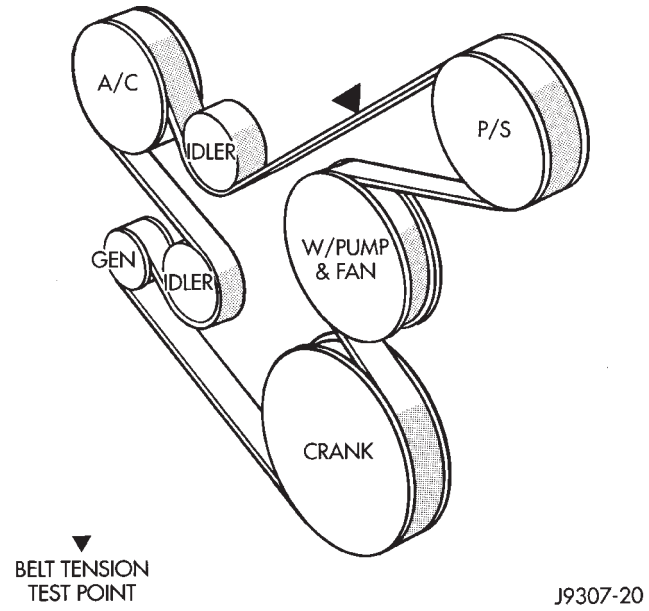

Fig. 2 YJ Models with 4.0L Engine, and XJ Models with 2.5L Engine—With A/C

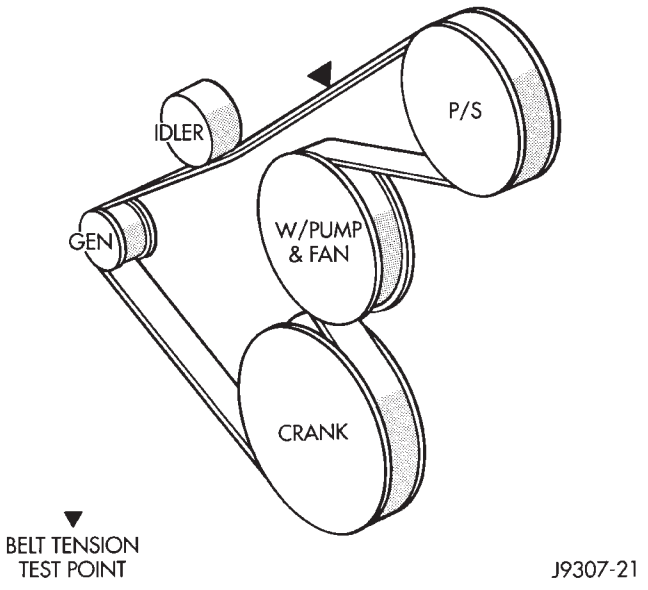

Fig. 3 YJ Models With 2.5L or 4.0L Engine, and XJ Models with 2.5L Engine—Without A/C

BELT SERVICE—EXCEPT RIGHT HAND DRIVE

The following procedures are for models equipped with conventional left hand drive. Also refer to Belt Service—With Right Hand Drive.

REPLACEMENT/ADJUSTMENT

Belt tension is adjusted at the power steering pump (or idler pulley if not equipped with power steering). To adjust belt tension or to replace belt:

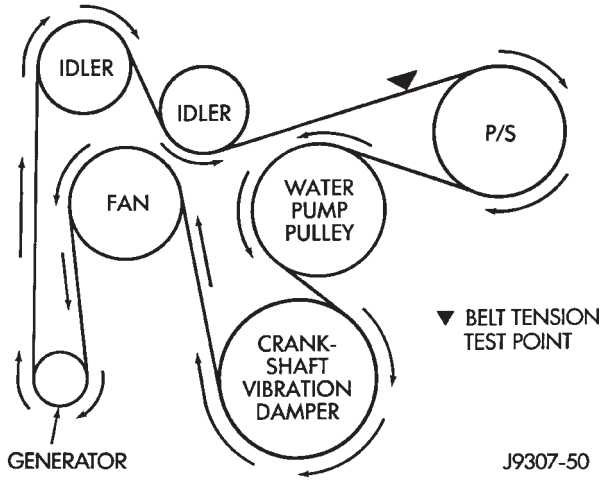

Fig. 4 XJ Models with 4.0L Engine—Without A/C—Except RHD

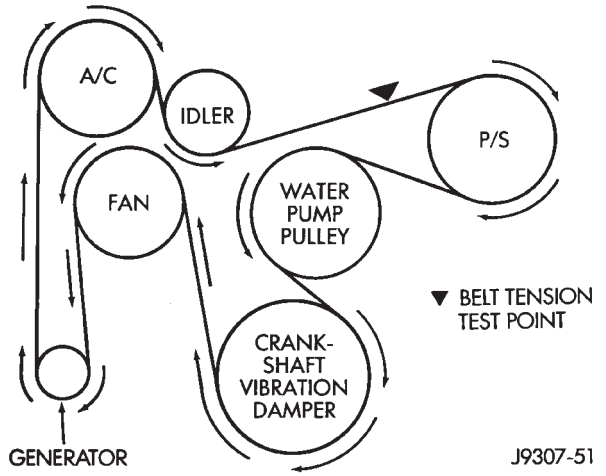

Fig. 5 XJ Models With 4.0L Engine—With A/C—Except RHD

(1) Loosen two rear power steering pump mounting bolts A (Fig. 8).

(2) Loosen upper pump pivot bolt B and lower lock nut C (Fig. 9).

(3) Loosen pump adjusting bolt D (Fig. 8).

(4) If belt is to be adjusted, refer to Drive Belt Tension specifications at the end of this group for correct tension and proceed to step 7.

If belt is to be replaced, remove belt.

(5) Check condition of all pulleys.

CAUTION: When installing the serpentine accessory drive belt, the belt MUST be routed correctly. If not, the engine may overheat due to the water pump rotating in the wrong direction. Refer to (Figs. 2, 3, 4 or 5) for correct belt routing.

(6) Install new belt. Refer to the end of this group for Drive Belt Tension specifications.

(7) Tighten pump adjusting bolt D (Fig. 8) to attain proper belt tension.

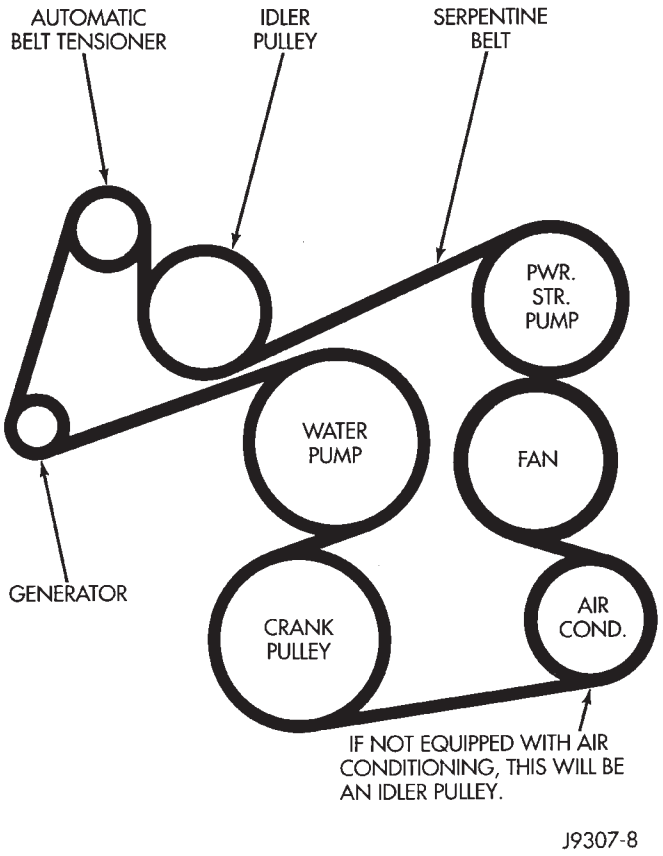

Fig. 6 XJ Models With 4.0L Engine—With A/C—With RHD

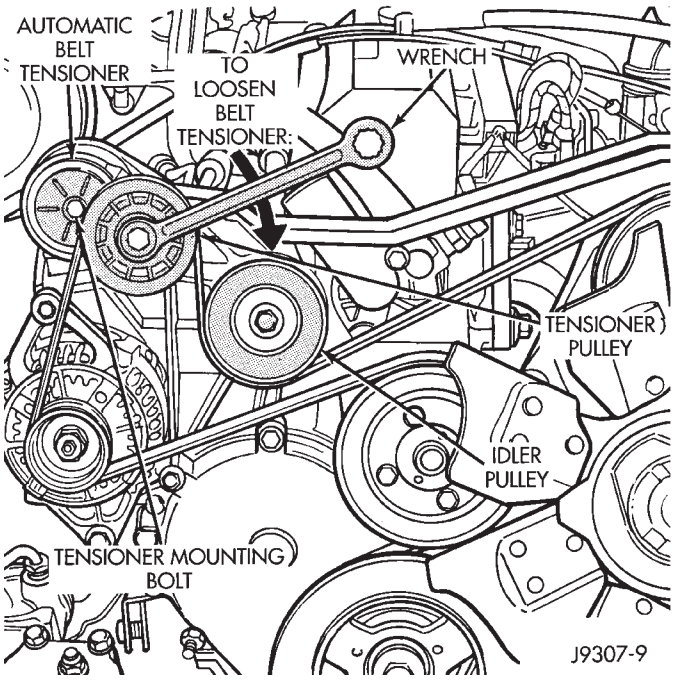

Fig. 7 Automatic Belt Tensioner—4.0L Engine With RHD

(8) Tighten rear pump mounting bolts, pivot bolt and lock nut to 27 N·m (20 ft. lbs.) torque.

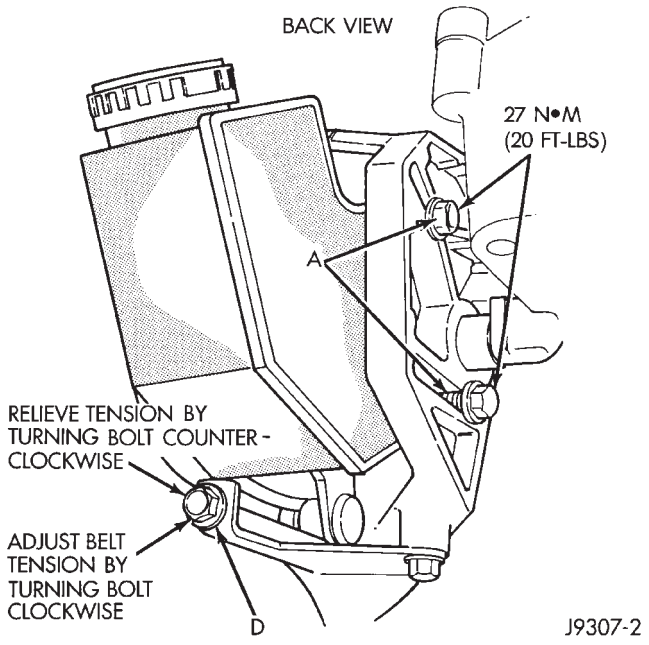

Fig. 8 P.S. Pump Rear Mounting Bolts—Typical

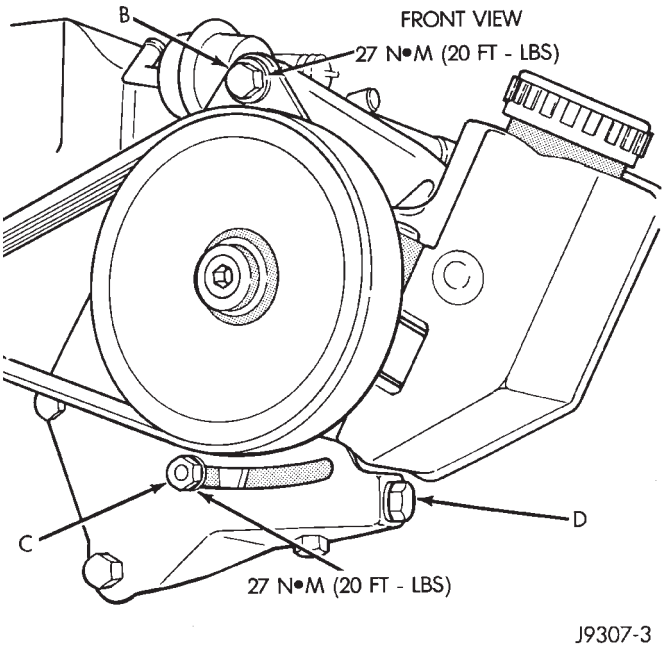

Fig. 9 P.S. Pump Front Mounting Bolt/Locknut—Typical

(9) After power steering pump has been tightened into position, recheck belt tension. Adjust if necessary.

BELT SERVICE—XJ MODELS WITH RIGHT HAND DRIVE

The automatic belt tensioner is used only on XJ models equipped with a 4.0L 6-cylinder engine with right hand drive steering system.

REMOVAL

(1) Attach a socket/wrench to the mounting bolt of the automatic tensioner pulley (Fig. 7).

(2) Rotate the tensioner assembly clockwise (as viewed from front) until tension has been relieved from belt.

(3) Remove belt from idler pulley (Fig. 7) first. Remove belt from vehicle.

(4) Check condition and alignment of all pulleys.

INSTALLATION

(1) Position the drive belt over all pulleys **except** the idler pulley (Fig. 7).

CAUTION: When installing the serpentine accessory drive belt, the belt must be routed correctly. If not, the engine may overheat due to the water pump rotating in the wrong direction. Refer to (Fig. 6) for correct engine belt routing. The correct belt with the correct length must be used

(2) Attach a socket/wrench to the pulley mounting bolt of the automatic tensioner (Fig. 7).

(3) Rotate the socket/wrench clockwise (Fig. 7). Place the belt over the idler pulley. Let tensioner rotate back into place. Remove wrench. Be sure belt is properly seated in the grooves of all pulleys.

AUTOMATIC BELT TENSIONER—XJ MODELS WITH RIGHT HAND DRIVE

The automatic belt tensioner is used only on XJ models equipped with a 4.0L 6-cylinder engine with right hand drive steering system.

The drive belt is equipped with a spring loaded automatic belt tensioner (Fig. 10). This belt tensioner will be used with all belt configurations such as with or without air conditioning.

REMOVAL

(1) Attach a socket/wrench to the mounting bolt of the automatic tensioner pulley (Fig. 10).

(2) Rotate the tensioner assembly clockwise (as viewed from front) until tension has been relieved from belt.

(3) Remove belt from idler pulley (Fig. 10) first. Remove belt from automatic tensioner.

(4) Remove tensioner mounting bolt (Fig. 10) from tensioner bracket. Remove tensioner from vehicle. Note alignment pin on the back of tensioner.

WARNING: BECAUSE OF HIGH SPRING PRESSURE, DO NOT ATTEMPT TO DISASSEMBLE AUTOMATIC TENSIONER. UNIT IS SERVICED AS AN ASSEMBLY (EXCEPT FOR PULLEY).

(5) Remove tensioner pulley bolt. Remove pulley from tensioner.

INSTALLATION

(1) Install pulley and pulley bolt to tensioner. Tighten bolt to 90 N·m (65 ft. lbs.) torque.

(2) Install tensioner assembly to mounting bracket. An alignment pin is located on the back of tensioner. Align this pin to the slotted hole in the mounting bracket. Install mounting bolt and tighten to 41 N·m (30 ft. lbs.) torque. If automatic tensioner bracket-to-generator mounting bracket bolts were removed, tighten to 27 N·m (20 ft. lbs.) torque.

(3) Position the drive belt over all pulleys **except** the idler pulley (Fig. 10).

CAUTION: When installing the serpentine accessory drive belt, the belt must be routed correctly. If not, the engine may overheat due to the water pump rotating in the wrong direction. Refer to (Fig. 6) for correct engine belt routing. The correct belt with the correct length must be used

(4) Attach a socket/wrench to the pulley mounting bolt of the automatic tensioner (Fig. 10).

(5) Rotate the socket/wrench clockwise (Fig. 10). Place the belt over the idler pulley. Let tensioner rotate back into place. Remove wrench. Be sure belt is properly seated on all pulleys.

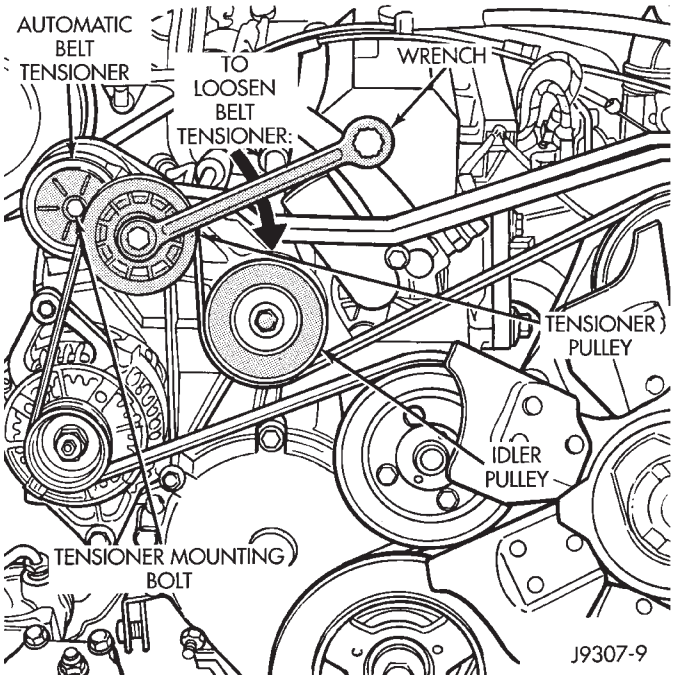

Fig. 10 Automatic Belt Tensioner—4.0L 6-Cylinder Engine With RHD

ENGINE BLOCK HEATER

GENERAL INFORMATION

DESCRIPTION AND OPERATION

An optional engine block heater is available for all models. The heater is equipped with a power cord. The cord is attached to an engine compartment component with tie-straps. The heater warms the engine providing easier engine starting and faster warm-up in low temperatures. The heater is mounted in a core hole of the engine cylinder block (in place of a freeze plug) with the heating element immersed in engine coolant. Connect the power cord to a grounded 110-120 volt AC electrical outlet with a grounded, three-wire extension cord.

WARNING: DO NOT OPERATE ENGINE UNLESS BLOCK HEATER CORD HAS BEEN DISCONNECTED FROM POWER SOURCE AND SECURED IN PLACE.

BLOCK HEATER SPECIFICATIONS

- 2.5L 4-Cylinder Engine: 115 Volts 400 Watts
- 4.0L 6-Cylinder Engine: 120 Volts 600 Watts

REMOVAL

Refer to correct illustration (Figures 11, 12 or 13) when servicing block heater.

WARNING: DO NOT REMOVE THE CYLINDER BLOCK DRAIN PLUGS OR LOOSEN THE RADIATOR DRAINCOCK WITH THE SYSTEM HOT AND PRESSURIZED. SERIOUS BURNS FROM THE COOLANT CAN OCCUR.

DO NOT WASTE reusable coolant. If solution is clean, drain coolant into a clean container for reuse.

(1) Drain coolant from radiator and engine cylinder block.

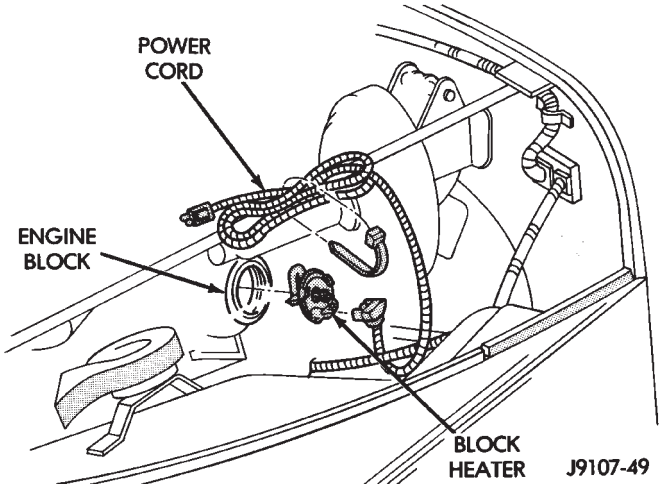

Fig. 13 Heater and Cord—YJ Models

(2) Unplug power cord from block heater.

(3) Loosen screw in center of block heater (Figs. 11, 12 or 13).

(4) Remove block heater from cylinder block.

INSTALLATION

(1) Thoroughly clean the engine core hole and the block heater seat.

(2) Insert block heater assembly into core hole with element loop pointing **Up.**

(3) Seat block heater flush against block face. Tighten mounting screw to 3.6 N·m (32 in. lbs.) torque.

(4) Fill cooling system with coolant. Pressurize system and inspect for leaks.

(5) Plug power cord into block heater. Route cord away from moving parts, linkages and exhaust system components. Secure cord in place with tie-straps.

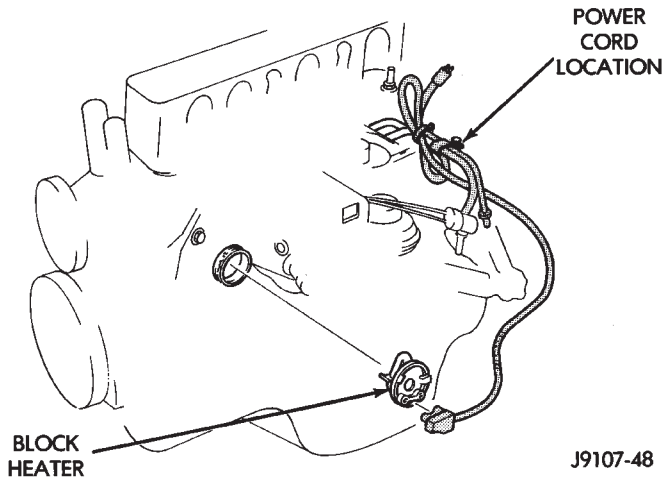

Fig. 11 Heater and Cord—XJ with 2.5L 4-Cylinder Engine

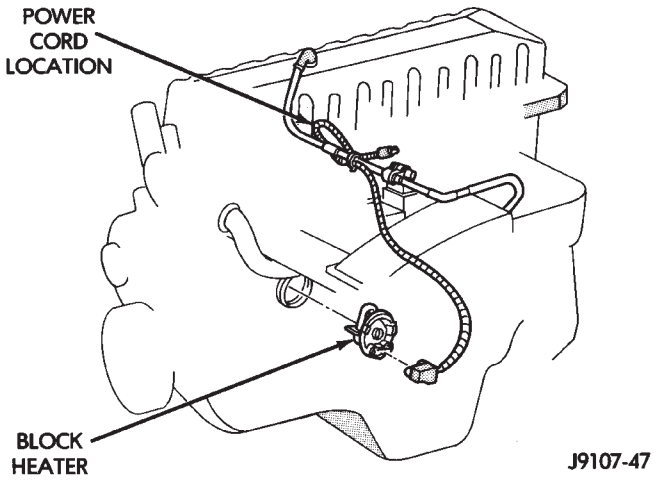

Fig. 12 Heater and Cord—XJ with 4.0L 6-Cylinder Engine

SPECIFICATIONS

GENERAL INFORMATION

The following specifications are published from the latest information available at the time of publication. **If anything differs between the specifications found on the Vehicle Emission Control Information (VECI) label and the following specifications, use specifications on VECI label.** The VECI label is located in the engine compartment.

DRIVE BELT TENSION

Belt tension can be adjusted only on models equipped with conventional left hand drive. Refer to the following Belt Tension—Except RHD Models chart for specifications.

It is not necessary to adjust belt tension on right hand drive (RHD) vehicles if equipped with a 4.0L 6-cylinder engine. The engine is equipped with an automatic belt tensioner. The tensioner maintains correct belt tension at all times. **Due to the use of this belt tensioner, DO NOT attempt to use a belt tension gauge on this engine.** Refer to Automatic Belt Tensioner for additional information.

BELT TENSION—EXCEPT RIGHT HAND DRIVE (RHD) MODELS

* **800-900 N (180-200 lbs. force)**
(With ** new serpentine belt)

* **623-712 N (140-160 lbs. force)**
(With ** used serpentine belt)

** Belt is considered new if it has been used 15 minutes or less.

* Specifications for use with a belt tension gauge. Refer to operating instructions supplied with gauge.

J9307-54

COOLING SYSTEM CAPACITIES

MODEL	ENGINE		COOLING CAPACITY		COOLING PACKAGE		RADIATOR		A/C	MECHANICAL FAN (VISCOUS DRIVE)			AUXILIARY* ELECTRIC FAN		
	2.5L	4.0L	QTS.	LITERS	STD.	HD.	ROWS OF TUBES	FINS PER INCH		DIA. (INCH)	NO. OF BLADES	BLADE PITCH (INCH)	DIA. (INCH)	NO. OF BLADES	BLADE PITCH (INCH)
XJ	•		10.0	9.5	•		1	15		16.0	5	2.5			
	•		10.0	9.5		•	1	20	•	16.0	5	2.5			
		•	12.0	11.4	•		1	19		15.0	7	1.88			
		•	12.0	11.4	•		1	19	•	15.0	7	1.88	11.0	6	1.75
		•	12.0	11.4		•	2	19		15.0	7	1.88	11.0	6	1.75
		•	12.0	11.4		•	2	19	•	15.0	7	1.88	11.0	6	1.75
YJ	•		9.0	8.5	•		1	15		15.0	5	2.5			
		•	10.5	9.9	•		2	15		17.25	5	2.58			
		•	10.5	9.9	•		2	15	•	17.25	5	2.58			

* 4.0L ENGINE WITH HEAVY DUTY COOLING AND/OR AIR CONDITIONING

J9407-22

TORQUE

DESCRIPTION	TORQUE
Generator Pivot Bolt	38 N•m (28 ft. lbs.)
Generator Rear Adj. Bolt	27 N•m (20 ft. lbs.)
Auto. Trans. Auxiliary Oil Cooler Mtg. Screws 4.0L	2 N•m (18 in. lbs.)
Auxiliary Electric Cooling Fan Mtg. Screws 4.0L	4 N•m (36 in. lbs.)
Condenser-to-Radiator Screws XJ Vehicles W/2.5L Eng.	6 N•m (55 in. lbs.)
Fan Blade Assy.-to-Viscous Fan Drive	24 N•m (18 ft. lbs.)
Viscous Fan Drive Assy.-to-Water Pump	27 N•m (20 ft. lbs.)
Fan Shroud Mtg. Bolts XJ W/2.5L	2 N•m (20 in. lbs.)
Fan Shroud Mtg. Screws Y J Vehicle	16 N•m (12 ft. lbs.)
Fan Shroud Mtg. Screws 4.0L Eng.	4 N•m (31 in. lbs.)
Engine Cyl. Block Heater	4 N•m (32 in. lbs.)
Radiator Mtg. Bolts XJ Vehicles	8 N•m (6 ft. lbs.)
Radiator Mounting Bolts XJ with 2.5L	6 N•m (55 in. lbs.)
Thermostat Housing	20 N•m (15 ft. lbs.)
Water Pump 2.5L and 4.0L	30 N•m (22 ft. lbs.)
Isolator Nuts (to crossmember)	10 N•m (86 in. lbs.)
Isolator Nuts (to radiator)	5 N•m (47 in. lbs.)

J9507-40

ELECTRICAL

GROUP INDEX

	Group		Group
AUDIO SYSTEMS	8F	POWER SEATS	8R
BATTERY/STARTER/GENERATOR SERVICE	8B	POWER WINDOWS	8S
BATTERY/STARTING/CHARGING SYSTEMS DIAGNOSTICS	8A	REAR WINDOW DEFOGGER	8N
CHIME/BUZZER WARNING SYSTEMS	8U	RESTRAINT SYSTEMS	8M
HORNS	8G	TURN SIGNAL AND HAZARD WARNING SYSTEMS	8J
IGNITION SYSTEMS	8D	VEHICLE SPEED CONTROL SYSTEM	8H
INSTRUMENT PANEL AND GAUGES	8E	WIPER AND WASHER SYSTEMS	8K
LAMPS	8L	XJ WIRING DIAGRAMS-LEFT HAND DRIVE	8W
OVERHEAD CONSOLE	8C	XJ WIRING DIAGRAMS-RIGHT HAND DRIVE	8W
POWER LOCKS	8P	YJ WIRING DIAGRAMS	8W
POWER MIRRORS	8T		

BATTERY/STARTING/CHARGING SYSTEMS DIAGNOSTICS

CONTENTS

	page		page
BATTERY	2	SPECIFICATIONS	23
CHARGING SYSTEM	17	STARTING SYSTEM	11
IGNITION-OFF DRAW	10	USING ON-BOARD DIAGNOSTIC SYSTEM	22

GENERAL INFORMATION

The battery, starting, and charging systems operate with one another; therefore, they must be tested as a complete system. In order for the vehicle to start and charge properly, all of the components involved in these systems must perform within specifications.

Group 8A covers battery, starting (Fig. 1) and charging (Fig. 2) system diagnostic procedures. These procedures include the most basic conventional diagnostic methods, to On-Board Diagnostics (OBD) built into the Powertrain Control Module (PCM). Use of an induction milliamp ammeter, volt/ohmmeter, battery charger, carbon pile rheostat (load tester), and 12-volt test lamp will be required.

All OBD-sensed systems are monitored by the PCM. Each monitored circuit is assigned a Diagnostic Trouble Code (DTC). The PCM will store a DTC in electronic memory for any failure it detects. See Using On-Board Diagnostic System in this group for more information.

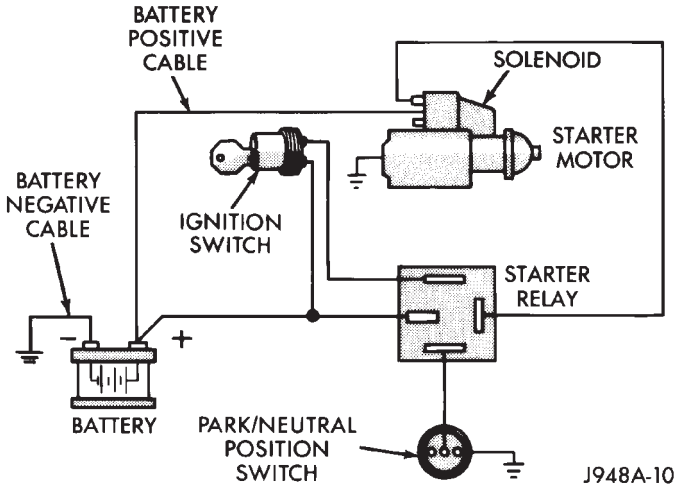

Fig. 1 Starting System Components (Typical)

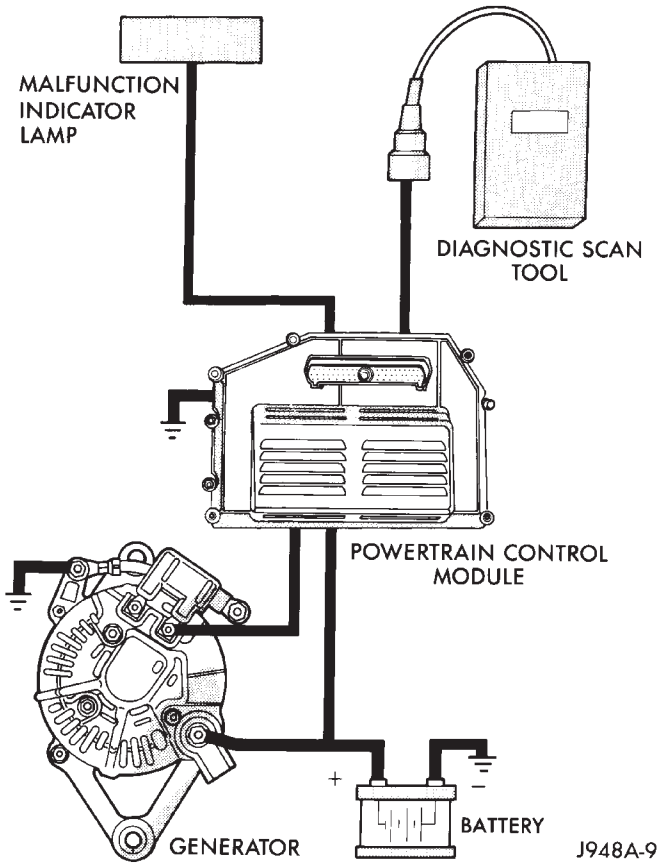

Fig. 2 Charging System Components (Typical)

BATTERY

GENERAL INFORMATION

The storage battery is a device used to store electrical energy potential in a chemical form. When an electrical load is applied to the battery terminals, an electrochemical reaction occurs within the battery. This reaction causes the battery to discharge electrical current.

The battery is made up of 6 individual cells that are connected in series. Each cell contains positively charged plate groups made of lead oxide, and negatively charged plate groups made of sponge lead. These dissimilar metal plates are submerged in a sulfuric acid and water solution called electrolyte.

As the battery discharges, a gradual chemical change takes place within each cell. The sulfuric acid in the electrolyte combines with the plate materials, causing both plates to change to lead sulfate. At the same time, oxygen from the positive plate material combines with hydrogen from the sulfuric acid, causing the electrolyte to become mainly water.

The chemical changes within the battery are caused by movement of excess or free electrons between the positive and negative plate groups. This movement of electrons produces a flow of electrical current through the load device attached to the battery terminals.

As the plate materials become more similar chemically, and the electrolyte becomes less acid, the voltage potential of each cell is reduced. However, by charging the battery with a voltage higher than that of the battery, the process is reversed.

Charging the battery gradually changes the sulfated lead plates back into sponge lead and lead oxide, and the water back into sulfuric acid. This action restores the difference in electron charges deposited on the plates, and the voltage potential of the battery cells.

For a battery to remain useful, it must be able to produce high-amperage current over an extended period. A battery must also be able to accept a charge, so that its voltage potential may be restored.

In addition to producing and storing electrical energy, the battery serves as a capacitor or voltage stabilizer for the vehicle electrical system. It absorbs abnormal or transient voltages caused by switching of any of the vehicle's electrical components.

The battery is vented to release excess gas that is created when the battery is being charged or dis-

charged. However, even with these vents, hydrogen gas can collect in or around the battery. If hydrogen gas is exposed to flame or sparks, it can ignite.

If the electrolyte level is low, the battery could arc internally and explode. If the battery is equipped with removable cell caps, add distilled water whenever the electrolyte level is below the top of the plates. If the battery cell caps cannot be removed, the battery must be replaced when the electrolyte level is low.

WARNING: DO NOT ATTEMPT TO ASSIST BOOST, CHARGE, OR TEST BATTERY WHEN ELECTROLYTE LEVEL IS BELOW THE TOP OF THE PLATES. PERSONAL INJURY MAY OCCUR.

BATTERY RATINGS

Currently, there are 2 commonly accepted methods for rating and comparing battery performance. These ratings are called Cold Cranking Amperage (CCA), and Reserve Capacity (RC). Be certain that a replacement battery has CCA and RC ratings that equal or exceed the original equipment specification for the vehicle being serviced. See Battery Classifications and Ratings charts in Specifications at the back of this group.

COLD CRANKING AMPERAGE

The Cold Cranking Amperage (CCA) rating specifies how much current (in amperes) the battery can deliver for 30 seconds at -17.7°C (0°F). Terminal voltage must not fall below 7.2 volts during or after the 30 second discharge. The CCA required is generally higher as engine displacement increases, depending also upon the starter current draw requirements.

RESERVE CAPACITY

The Reserve Capacity (RC) rating specifies the time (in minutes) it takes for battery terminal voltage to fall below 10.2 volts at a discharge rate of 25 amps. RC is determined with the battery fully-charged at 26.7°C (80°F). This rating estimates how long the battery might last after a charging system failure, under minimum electrical load.

DIAGNOSIS

The battery must be completely charged and the top, posts, and terminal clamps should be properly cleaned before diagnostic procedures are performed. Refer to Group 8B - Battery/Starter/Generator Service for more information.

The condition of a battery is determined by two criteria:

(1) **State-Of-Charge** This can be determined by viewing the built-in test indicator, by checking specific gravity of the electrolyte (hydrometer test), or by checking battery voltage (open circuit voltage test).

(2) **Cranking Capacity** This can be determined by performing a battery load test, which measures the ability of the battery to supply high-amperage current.

If the battery has a built-in test indicator, use this test first. If it has no test indicator, but has removable cell caps, perform the hydrometer test first. If cell caps are not removable, or a hydrometer is not available, perform the open circuit voltage test first.

The battery must be charged before proceeding with a load test if:

- the built-in test indicator has a black or dark color visible
- the temperature corrected specific gravity is less than 1.235
- the open circuit voltage is less than 12.4 volts.

A battery that will not accept a charge is faulty and further testing is not required. A battery that is fully-charged, but does not pass the load test is faulty and must be replaced.

Completely discharged batteries may take several hours to accept a charge. See Charging Completely Discharged Battery.

A battery is fully-charged when:

- all cells are gassing freely during charging
- a green color is visible in the sight glass of the built-in test indicator
- three corrected specific gravity tests, taken at 1-hour intervals, indicate no increase in specific gravity
- open circuit voltage is 12.4 volts or greater.

ABNORMAL BATTERY DISCHARGING

Any of the following conditions can result in abnormal battery discharging:

(1) Corroded battery posts and terminals.

(2) Loose or worn generator drive belt.

(3) Electrical loads that exceed the output of the charging system, possibly due to equipment installed after manufacture or repeated short trip use.

(4) Slow driving speeds (heavy traffic conditions) or prolonged idling with high-amperage draw systems in use.

(5) Faulty circuit or component causing excessive ignition-off draw. See Ignition-Off Draw in this group for diagnosis.

(6) Faulty charging system.

(7) Faulty or incorrect battery.

BUILT-IN TEST INDICATOR

A test indicator (hydrometer) built into the top of the battery case, provides visual information for battery testing (Fig. 1). It is important when using the test indicator that the battery be level and have a clean sight glass to see correct indications. Additional light may be required to view indicator.

BATTERY DIAGNOSIS

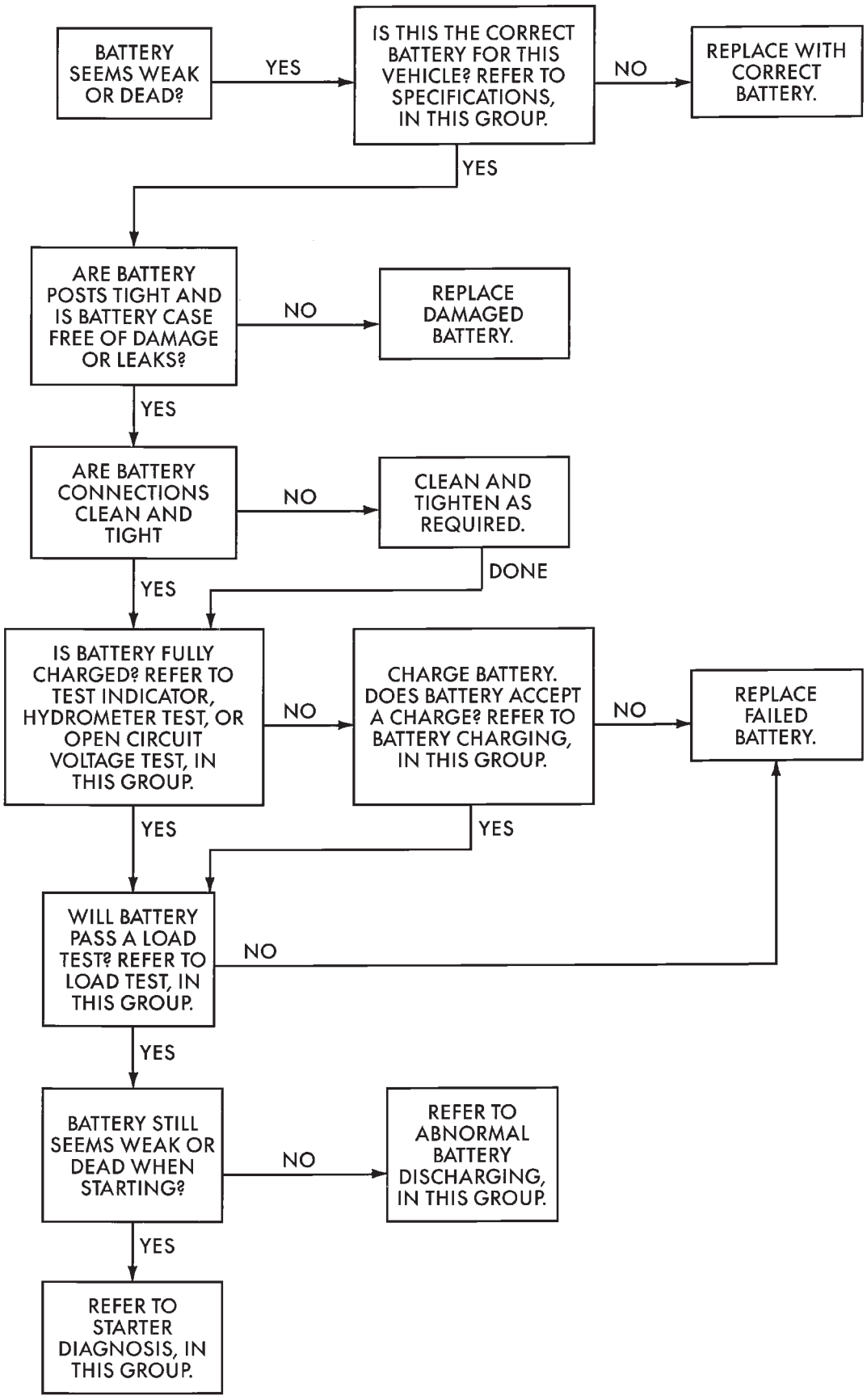

J958A-1

WARNING: DO NOT USE OPEN FLAME AS A SOURCE OF ADDITIONAL LIGHT FOR VIEWING TEST INDICATOR. EXPLOSIVE HYDROGEN GAS MAY BE PRESENT IN THE AREA SURROUNDING BATTERY.

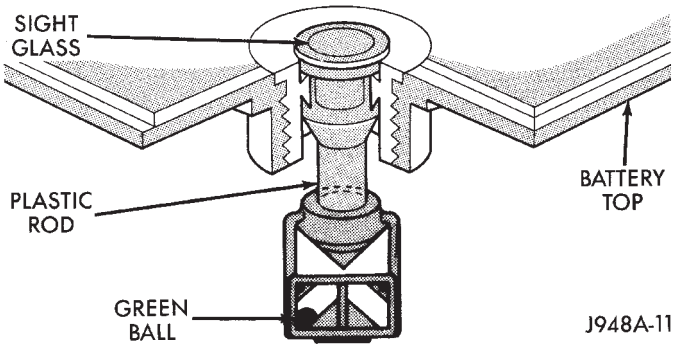

Fig. 1 Built-In Test Indicator

Like a hydrometer, the built-in test indicator measures the specific gravity of the electrolyte. Specific gravity will indicate battery state-of-charge. However, the test indicator will not indicate cranking capacity of the battery. See Load Test in this group for more information.

Look into the sight glass and note the color of the indicator (Fig. 2). Refer to the following description, as the color indicates:

GREEN—indicates 75% to 100% state-of-charge.

The battery is adequately charged for further testing or return to use. If the vehicle will not crank for a minimum of 15 seconds with a fully-charged battery, perform Load Test.

BLACK OR DARK—indicates 0% to 75% state-of-charge.

The battery is inadequately charged and must be charged until green indicator (Fig. 2) is visible in sight glass (12.4 volts or more) before the battery is tested further or returned to use. See Abnormal Battery Discharging in this group to diagnose cause of discharged condition.

YELLOW OR BRIGHT—indicates low electrolyte level.

The electrolyte level in the battery is below test indicator (Fig. 2). A maintenance-free battery with non-removable cell caps must be replaced if electrolyte level is low. Water can be added to a low-maintenance battery with removable cell caps. A low electrolyte level may be caused by an over-charging condition. See Charging System in this group to diagnose an over-charging condition.

WARNING: DO NOT ATTEMPT TO CHARGE, TEST, OR ASSIST BOOST BATTERY WHEN YELLOW OR BRIGHT COLOR IS VISIBLE IN SIGHT GLASS OF TEST INDICATOR. LOW ELECTROLYTE LEVEL CAN ALLOW BATTERY TO ARC INTERNALLY AND EXPLODE. PERSONAL INJURY MAY OCCUR.

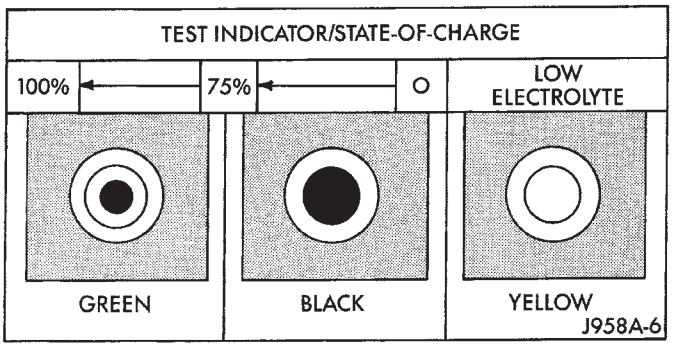

Fig. 2 Built-In Test Indicator Sight Glass

HYDROMETER TEST

The hydrometer test reveals the battery state-of-charge by measuring the specific gravity of the electrolyte. This test cannot be performed on batteries with non-removable cell caps. If battery has non-removable cell caps, see Built-In Test Indicator or Open Circuit Voltage Test.

Specific gravity is a comparison of the density of the electrolyte to the density of pure water. Pure water has a specific gravity of 1.000, and sulfuric acid has a specific gravity of 1.835. Sulfuric acid makes up approximately 35% of the electrolyte by weight, or 24% by volume.

In a fully-charged battery the electrolyte will have a temperature corrected specific gravity of 1.260 to 1.290. However, a specific gravity of 1.235 or above is satisfactory for battery load testing and/or return to service.

Before testing, visually inspect battery for any damage (cracked case or cover, loose posts, etc.) that would cause the battery to be faulty. Then remove cell caps and check electrolyte level. Add distilled water if electrolyte level is below the top of the battery plates.

To use the hydrometer correctly, hold it with the top surface of the electrolyte at eye level. Refer to the hydrometer manufacturer's instructions for correct use of hydrometer. Remove only enough electrolyte from the battery so the float is off the bottom of the hydrometer barrel with pressure on the bulb released.

Exercise care when inserting the tip of the hydrometer into a cell to avoid damaging the plate separators. Damaged plate separators can cause premature battery failure.

Hydrometer floats are generally calibrated to indicate the specific gravity correctly only at 26.7°C (80°F). When testing the specific gravity at any other temperature, a correction factor is required.

The correction factor is approximately a specific gravity value of 0.004, referred to as 4 points of specific gravity. For each 5.5°C above 26.7°C (10°F above 80°F), add 4 points. For each 5.5°C below 26.7°C (10°F below 80°F), subtract 4 points. Always correct

the specific gravity for temperature variation. Test the specific gravity of the electrolyte in each battery cell.

Example: A battery is tested at -12.2°C (10°F) and has a specific gravity of 1.240. Determine the actual specific gravity as follows:

(1) Determine the number of degrees above or below 26.7°C (80°F):

26.6°C - -12.2°C = 38.8°C (80°F - 10°F = 70°F)

(2) Divide the result from step 1 by 5.5 (10):

38.8°C/5.5 = 7 (70°F/10 = 7)

(3) Multiply the result from step 2 by the temperature correction factor (0.004):

7 x 0.004 = 0.028

(4) The temperature at testing was below 26.7°C (80°F); therefore, the temperature correction is subtracted:

1.240 - 0.028 = 1.212

The corrected specific gravity of the battery in this example is 1.212.

If the specific gravity of all cells is above 1.235, but variation between cells is more than 50 points (0.050), the battery should be replaced.

If the specific gravity of one or more cells is less than 1.235, charge the battery at a rate of approximately 5 amperes. Continue charging until 3 consecutive specific gravity tests, taken at 1-hour intervals, are constant. If the cell specific gravity variation is more than 50 points (0.050) at the end of the charge period, replace the battery.

When the specific gravity of all cells is above 1.235, and cell variation is less than 50 points (0.050), the battery may be load tested.

OPEN CIRCUIT VOLTAGE TEST

A battery open circuit voltage (no load) test will show state-of-charge of a battery. This test can be used in place of the hydrometer test if a hydrometer is not available, or for maintenance-free batteries with non-removable cell caps.

Before proceeding with this test or load test, completely charge battery as described in Battery Charging in this group.

Test battery open circuit voltage as follows:

(1) Before measuring open circuit voltage the surface charge must be removed from the battery. Turn headlamps on for 15 seconds, then allow up to 5 minutes for voltage to stabilize.

(2) Remove both battery cables, negative first.

(3) Using a voltmeter connected to the battery posts (refer to instructions provided with voltmeter) measure open circuit voltage (Fig. 3).

See Open Circuit Voltage chart. This voltage reading will indicate state-of-charge, but will not reveal cranking capacity. If a battery has an open circuit voltage reading of 12.4 volts or greater, it may be load tested. A battery that will not endure a load test is faulty and must be replaced.

OPEN CIRCUIT VOLTAGE

Open Circuit Volts	Percent Charge
11.7 volts or less	0%
12.0	25%
12.2	50%
12.4	75%
12.6 or more	100%

928A-3

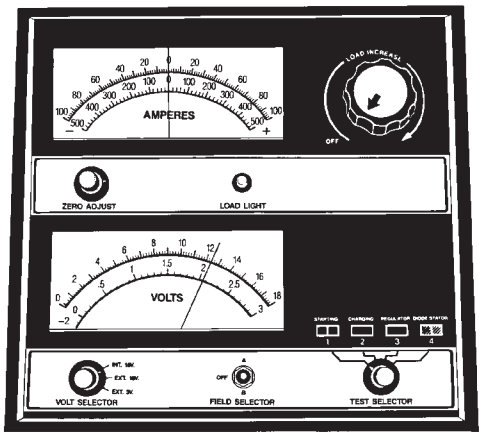

898A-7

Fig. 3 Testing Open Circuit Voltage

LOAD TEST

A battery load test will verify battery cranking capacity. The test is based on the Cold Cranking Amperage (CCA) rating of the battery. See Battery Classifications and Ratings chart in Specifications, at the back of this group.

WARNING: IF BATTERY SHOWS SIGNS OF FREEZING, LEAKING, LOOSE POSTS, OR LOW ELECTROLYTE LEVEL, DO NOT LOAD TEST. PERSONAL INJURY AND/OR VEHICLE DAMAGE MAY RESULT.

Before performing load test, the battery must be FULLY-CHARGED.

(1) Remove both battery cables, negative first. Battery top and posts should be clean.

(2) Connect a suitable volt-ammeter-load tester (Fig. 4) to the battery posts (Fig. 5). Refer to operating instructions provided with the tester being used. Check the open circuit voltage (no load) of the battery. Open circuit voltage must be 12.4 volts or greater.

(3) Rotate the load control knob (carbon pile rheostat) to apply a 300 amp load for 15 seconds, then return the control knob to OFF (Fig. 6). This will remove the surface charge from the battery.

(4) Allow the battery to stabilize to open circuit voltage. It may take up to 5 minutes for voltage to stabilize.

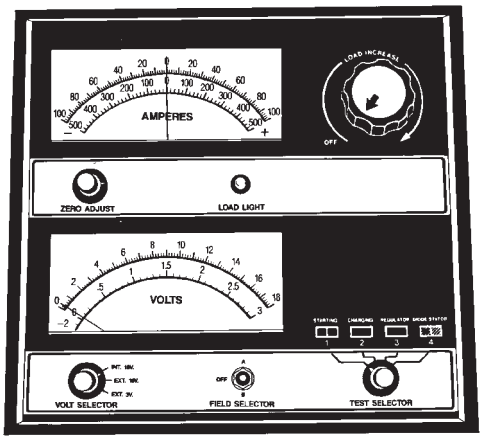

Fig. 4 Volt-Amps-Load Tester (Typical)

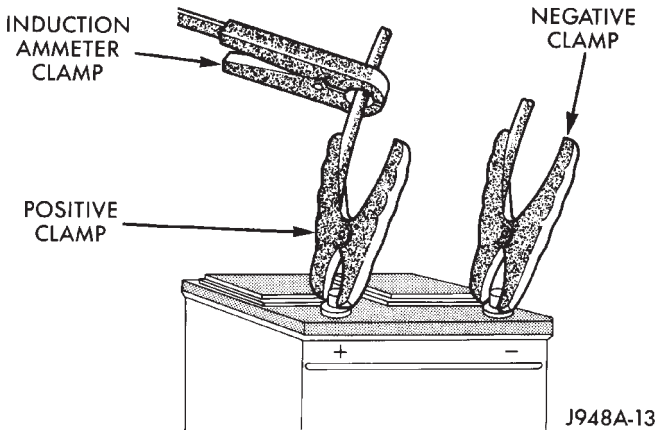

Fig. 5 Volt-Ammeter-Load Tester Connections

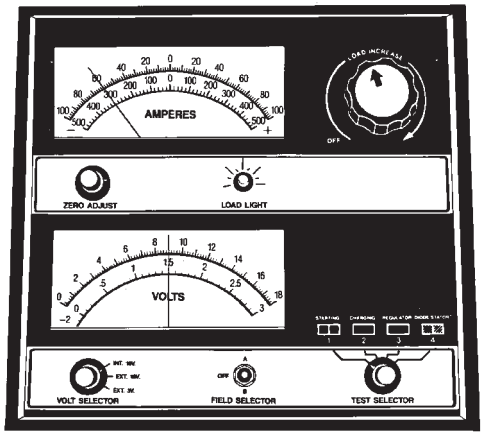

Fig. 6 Remove Surface Charge from Battery

(5) Rotate the load control knob to maintain a load equal to 50% of CCA rating (Fig. 7). After 15 seconds, record the loaded voltage reading, then return the load control knob to OFF.

(6) Voltage drop will vary with battery temperature at the time of the load test. Battery temperature can be estimated by the ambient temperature over the past several hours. If the battery has been charged, boosted, or loaded a few minutes prior to test, the battery will be somewhat warmer. See Load Test Temperature chart for proper loaded voltage reading.

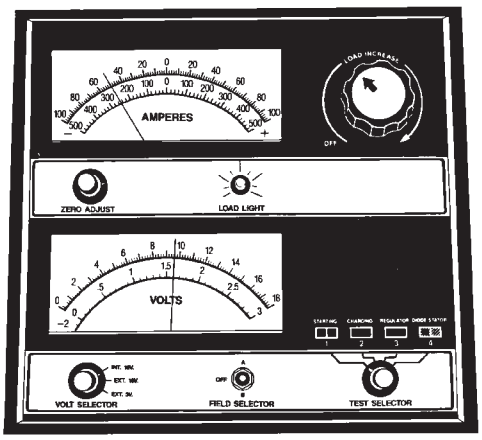

Fig. 7 Load 50% CCA Rating - Note Voltage

(7) If the voltmeter reading falls below 9.6 volts, at a minimum battery temperature of 21°C (70°F), replace the battery.

LOAD TEST TEMPERATURE		
Minimum Voltage	Temperature	
	F°	C°
9.6	70 and above	21 and above
9.5	60	16
9.4	50	10
9.3	40	4
9.1	30	-1
8.9	20	-7
8.7	10	-12
8.5	0	-18

J908A-4

BATTERY CHARGING

A battery is fully-charged when:

- all cells are gassing freely during charging
- a green color is visible in sight glass of built-in test indicator
- three corrected specific gravity tests, taken at 1-hour intervals, indicate no increase in specific gravity
- open circuit voltage is 12.4 volts or above.

WARNING: DO NOT ASSIST BOOST OR CHARGE A BATTERY THAT HAS LOW ELECTROLYTE LEVEL OR IS FROZEN. BATTERY MAY ARC INTERNALLY AND EXPLODE.

WARNING: EXPLOSIVE HYDROGEN GAS FORMS IN AND AROUND BATTERY. DO NOT SMOKE, USE FLAME, OR CREATE SPARKS NEAR BATTERY.

WARNING: POISONOUS AND CAUSTIC. BATTERY CONTAINS SULFURIC ACID. AVOID CONTACT WITH SKIN, EYES, OR CLOTHING. IN EVENT OF CONTACT, FLUSH WITH WATER AND CALL PHYSICIAN IMMEDIATELY. KEEP OUT OF REACH OF CHILDREN.

CAUTION: Always disconnect the battery negative cable before charging battery to avoid damage to electrical system components. Do not exceed 16.0 volts while charging battery.

Battery electrolyte will bubble inside battery case during normal battery charging. If the electrolyte boils, or is discharged from the vent holes while charging, immediately reduce charging rate or turn OFF charger and evaluate battery condition.

Battery should not be hot to the touch. If the battery feels hot to the touch, turn OFF charger and let battery cool before continuing charging operation.

Some battery chargers are equipped with polarity sensing circuitry. This circuitry protects the charger and/or battery from being damaged if improperly connected.

If the battery state-of-charge is too low for the polarity sensing circuitry to detect, the charger will not operate. This makes it appear that the battery will not accept charging current. Refer to instructions provided with the battery charger being used to bypass the polarity sensing circuitry.

BATTERY CHARGING TIME TABLE

Charging Amperage	5 Amps	10 Amps	20 Amps
Open Circuit Voltage	Hours Charging at 21°C		
12.25 to 12.39	6 Hrs.	3 Hrs.	1.5 Hr.
12.00 to 12.24	8 Hrs.	4 Hrs.	2 Hrs.
11.95 to 12.09	12 Hrs.	6 Hrs.	3 Hrs.
10.00 to 11.95	14 Hrs.	7 Hrs.	3.5 Hrs.
10.00 to 0	See Charging Completely Discharged Battery		

928A-19

After the battery has been charged to 12.4 volts or greater, perform a load test to determine cranking capacity. If the battery will endure a load test, return the battery to use. If the battery will not endure a load test, it must be replaced.

Clean and inspect battery holddowns, tray, terminals, posts, and top before completing service. Refer to Group 8B - Battery/Starter/Generator Service for more information.

CHARGING TIME REQUIRED

The time required to charge a battery will vary, depending upon the following factors:

(1) **Battery Capacity**—A completely discharged heavy-duty battery requires twice the recharging time of a small capacity battery.

WARNING: NEVER EXCEED 20 AMPS WHEN CHARGING A COLD (-1°C/30°F) BATTERY. PERSONAL INJURY MAY RESULT.

(2) **Temperature**—A longer time will be needed to charge a battery at -18°C (0°F) than at 27°C (80°F). When a fast charger is connected to a cold battery, current accepted by the battery will be very low at first. As the battery warms, it will accept a higher charging current rate.

(3) **Charger Capacity**—A charger that supplies only 5 amperes will require a longer charging time. A charger that supplies 20 amperes or more requires a shorter charging time.

(4) **State-Of-Charge**—A completely discharged battery requires more charging time than a partially discharged battery. Electrolyte is nearly pure water in a completely discharged battery. At first, the charging current (amperage) will be low. As the battery charges, the specific gravity of the electrolyte will gradually rise.

CHARGING COMPLETELY DISCHARGED BATTERY

The following procedure should be used to recharge a completely discharged battery. Unless this procedure is properly followed, a good battery may be needlessly replaced.

(1) Measure voltage at battery posts with a voltmeter, accurate to 1/10 (0.10) volt (Fig. 8). If the reading is below 10 volts, the charge current will be low. It could take some time before the battery accepts a current greater than a few milliamperes. Such low current may not be detectable on ammeters built into many chargers.

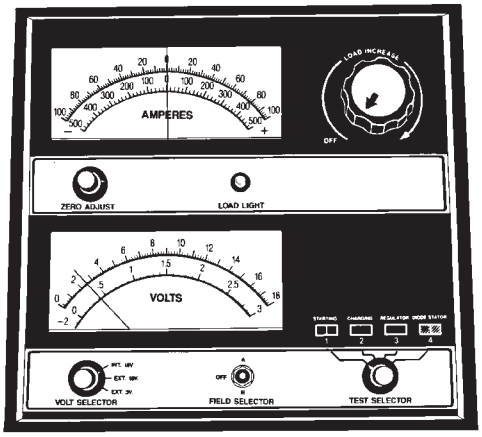

898A-12

Fig. 8 Voltmeter Accurate to 1/10 Volt Connected

(2) Disconnect battery negative cable. Connect charger leads. Some battery chargers are equipped

with polarity sensing circuitry. This circuitry protects the charger and/or battery from being damaged if improperly connected. If the battery state-of-charge is too low for the polarity sensing circuitry to detect, the charger will not operate. This makes it appear that the battery will not accept charging current. Refer to the instructions provided with the battery charger to bypass the polarity sensing circuitry.

(3) Battery chargers vary in the amount of voltage and current they provide. The amount of time required for a battery to accept measurable charger current at various voltages is shown in Charge Rate chart. If charge current is still not measurable at end of charging times, the battery should be replaced. If charge current is measurable during charging time, the battery may be good and charging should be completed in the normal manner.

CHARGE RATE

Voltage	Hours
16.0 volts maximum	up to 4 hrs.
14.0 to 15.9 volts	up to 8 hrs.
13.9 volts or less	up to 16 hrs.

J928A-6

IGNITION-OFF DRAW

GENERAL INFORMATION

Ignition-Off Draw (IOD) refers to power being drained from the battery with the ignition switch turned OFF. A normal vehicle electrical system will draw from 5 to 20 milliamps (0.005 - 0.020 amps). This is with the ignition switch in the OFF position, and all non-ignition controlled circuits in proper working order. The 20 milliamps are needed to supply PCM memory, digital clock memory, and electronically-tuned radio memory.

A vehicle that has not been operated for approximately 20 days, may discharge the battery to an inadequate level. When a vehicle will not be used for 20 days or more (stored), remove the IOD fuse in the Power Distribution Center (PDC). This will reduce battery discharging.

Excessive battery drain can be caused by:

- electrical items left on
- faulty or improperly adjusted switches
- internally shorted generator
- intermittent shorts in the wiring.

If the IOD is over 20 milliamps, the problem must be found and corrected before replacing a battery. In most cases, the battery can be charged and returned to service.

DIAGNOSIS

Testing for high-amperage IOD must be performed first to prevent damage to most milliamp meters.

(1) Verify that all electrical accessories are off. Turn off all lamps, remove ignition key, and close all doors. If the vehicle is equipped with illuminated entry or electronically-tuned radio, allow the systems to automatically shut off (time out). This may take up to 3 minutes.

(2) Determine that the underhood lamp is operating properly, then disconnect or remove bulb.

(3) Disconnect negative cable from battery.

(4) Connect a typical 12-volt test lamp (low-wattage bulb) between the negative cable clamp and the battery negative terminal. Make sure that the doors remain closed so that illuminated entry is not activated.

The test lamp may light brightly for up to 3 minutes, or may not light at all, depending upon the vehicle's electrical equipment. The term brightly, as used throughout the following tests, implies the brightness of the test lamp will be the same as if it were connected across the battery.

The test lamp must be securely clamped to the negative cable clamp and battery negative terminal. If the test lamp becomes disconnected during any part of the IOD test, the electronic timer function will be activated and all tests must be repeated.

(5) After 3 minutes the test lamp should turn off or be dimly lit, depending upon the vehicle's electrical equipment. If the test lamp remains brightly lit, do not disconnect it. Remove each fuse or circuit breaker (refer to Group 8W - Wiring Diagrams) until test lamp is either off or dimly lit. This will isolate each circuit and identify the source of the high-amperage draw.

If the test lamp is still brightly lit after disconnecting each fuse and circuit breaker, disconnect the wiring harness from the generator. If test lamp now turns off or is dimly lit, see Charging System in this group to diagnose faulty generator. Do not disconnect the test lamp.

After high-amperage IOD has been corrected, low-amperage IOD may be checked. It is now safe to install a milliamp meter to check for low- amperage IOD.

(6) With test lamp still connected securely, clamp a milliamp meter between battery negative terminal and negative cable clamp.

Do not open any doors or turn on any electrical accessories with the test lamp disconnected or the milliamp meter may be damaged.

(7) Disconnect test lamp. Observe milliamp meter. The current draw should not exceed 0.020 amp. If draw exceeds 20 milliamps, isolate each circuit by removing circuit breakers and fuses. The milliamp meter reading will drop when the source of the draw is disconnected. Repair this circuit as necessary, whether a wiring short, incorrect switch adjustment or a component failure is found.

STARTING SYSTEM

GENERAL INFORMATION

The starting system (Fig. 1) consists of:

- ignition switch
- starter relay
- park/neutral position switch (automatic transmission)
- wiring harness and connections
- battery
- starter with an integral solenoid.

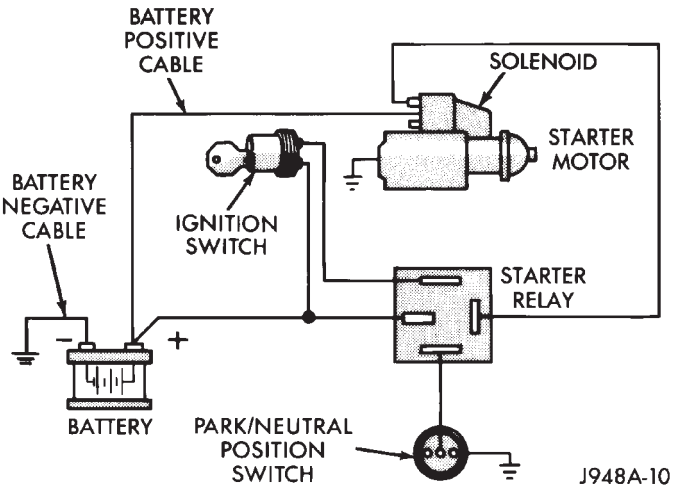

Fig. 1 Starting System Components (Typical)

Following is a general description of the major starting system components. Refer to Group 8W - Wiring Diagrams for complete circuit descriptions and diagrams.

These components form 2 separate circuits. A high-amperage feed circuit that feeds the starter up to 300+ amps, and a low-amperage control circuit that operates on less than 20 amps.

Battery voltage is supplied through the low-amperage control circuit to the coil battery terminal of the starter relay when the ignition switch is turned to the START position.

If the vehicle is equipped with an automatic transmission, the park/neutral position switch provides a ground path to the starter relay coil ground terminal. This switch provides ground only with the transmission in NEUTRAL or PARK. If the vehicle is equipped with a manual transmission, the starter relay coil ground terminal is always grounded.

With the starter relay coil now energized, the normally open relay contacts close. The relay contacts connect the relay common feed terminal to the relay normally open terminal. The closed relay contacts energize the starter solenoid coil windings.

The energized solenoid coils pull-in and hold-in the solenoid plunger. The solenoid plunger pulls the shift lever in the starter. This engages the starter overrunning clutch and pinion gear with the flywheel/drive plate ring gear.

As the solenoid plunger reaches the end of its travel, the solenoid contact disc completes the high-amperage starter feed circuit. Current now flows between the solenoid battery terminal and the starter motor, energizing the starter.

Once the engine starts, the overrunning clutch protects the starter from damage by allowing the starter pinion gear to spin faster than the pinion shaft. When the driver releases the ignition switch to the ON position the starter relay coil is de-energized. This causes the relay contacts to open. When the relay contacts open, the starter solenoid coil is de-energized.

When the solenoid coil is de-energized, the solenoid plunger return spring returns the plunger to its relaxed position. This causes the contact disc to open the starter feed circuit, and the shift lever to disengage the overrunning clutch and pinion gear from the ring gear.

The starter motor and solenoid are serviced only as a complete assembly. If either component fails, the entire assembly must be replaced.

DIAGNOSIS

Before removing any unit from the starting system for repair, perform the following inspections:

INSPECTION

BATTERY INSPECTION

To determine condition of the battery, see Battery in this group.

WIRING INSPECTION

Inspect wiring for damage. Inspect all connections at:

- starter solenoid
- park/neutral position switch (automatic transmission)
- ignition switch
- starter relay
- battery (including all ground connections).

Clean, tighten and repair all connections as required.

SOLENOID, RELAY AND SWITCH INSPECTIONS

Inspect the solenoid, relay and ignition switch to determine their condition. Also, if equipped with automatic transmission, inspect condition of the park/neutral position switch. Testing information can be found in the following pages.

STARTING SYSTEM DIAGNOSIS

CONDITION	POSSIBLE CAUSES	CORRECTION
STARTER FAILS TO ENGAGE	1. Battery discharged or faulty.	1. See Battery, in this group. Charge or replace battery, if required.
	2. Starting circuit wiring faulty.	2. See Cold Cranking Test, in this group. Test and repair feed and/or control circuits, if required.
	3. Starter relay faulty.	3. See Relay Test, in this group. Replace relay, if required.
	4. Ignition switch faulty.	4. Refer to Group 8D - Ignition Systems, for testing and service information. Replace or adjust switch, if required.
	5. Park/Neutral position switch (auto trans) faulty or misadjusted.	5. Refer to Group 21 - Transmission and Transfer Case, for testing and service information. Replace switch, if required.
	6. Starter solenoid faulty.	6. See Solenoid Test, in this group. Replace starter assembly, if required.
	7. Starter assembly faulty.	7. Refer to Group 8B - Battery/Starter/ Generator Service, for starter service procedures. Replace starter assembly, if required.
STARTER ENGAGES, FAILS TO TURN ENGINE	1. Battery discharged or faulty.	1. See Battery, in this group. Charge or replace battery, if required.
	2. Starting circuit wiring faulty.	2. See Cold Cranking Test, in this group. Test and repair feed and/or control circuits, if required.
	3. Starter assembly faulty.	3. Refer to Group 8B - Battery/Starter/ Generator Service, for starter service procedures. Replace starter assembly, if required.
	4. Engine seized.	4. Refer to Group 9 - Engine, for diagnostic and service procedures.
STARTER ENGAGES, SPINS OUT BEFORE ENGINE STARTS	1. Broken teeth on flywheel or drive plate ring gear.	1. Refer to Group 8B - Battery/Starter/ Generator Service for starter removal procedures. Inspect ring gear and replace, if required.
	2. Starter assembly faulty.	2. Refer to Group 8B - Battery/Starter/ Generator Service, for starter service procedures. Replace starter assembly, if required.
STARTER DOES NOT ENGAGE	1. Starter improperly installed.	1. Refer to Group 8B - Battery/Starter/ Generator Service, for starter installation procedures.
	2. Starter relay faulty.	2. See Relay Test, in this group. Replace relay, if required.
	3. Ignition switch faulty.	3. Refer to Group 8D - Ignition Systems, for testing and service information. Replace or adjust switch, if required.
	4. Starter assembly faulty.	4. Refer to Group 8B - Battery/Starter/ Generator Service, for starter service procedures. Replace starter assembly, if required.

J958A-3

COLD CRANKING TEST

(1) Battery must be fully-charged and load tested before proceeding. See Battery, in this group.

(2) Connect a suitable volt-ampere tester to the battery terminals (Fig. 2). Refer to the operating instructions provided with the tester being used.

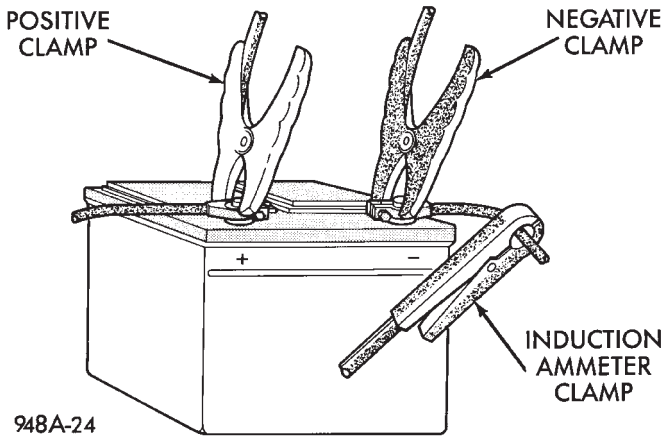

Fig. 2 Volt-Amps Tester Connections (Typical)

(3) Fully engage parking brake. Place manual transmission in NEUTRAL, automatic transmission in PARK.

(4) Verify that all lamps and accessories are OFF.

(5) Unplug Auto Shut-Down (ASD) relay from Power Distribution Center (PDC) to prevent engine from starting. Relay location is shown on underside of PDC cover.

(6) Rotate and hold the ignition switch in the START position. Note cranking voltage and amperage.

(a) If voltage reads above 9.6 volts and amperage draw reads above specifications, see Feed Circuit Tests.

(b) If voltage reads 12.5 volts or greater and amperage reads below specifications, see Control Circuit Tests.

A cold engine will increase starter current and reduce battery voltage.

FEED CIRCUIT TESTS

The starter feed circuit tests (voltage drop method) will determine if there is excessive resistance in the high-amperage circuit. When performing these tests, it is important that the voltmeter be connected properly. Connect voltmeter leads to the terminals that the cable connectors or clamps are attached to, not to the cable connectors or clamps. For example: When testing between the battery and solenoid, touch the voltmeter leads to the battery post and the solenoid threaded stud.

The following operation will require a voltmeter accurate to 1/10 (0.10) volt. Before performing the tests, be certain the following procedures are accomplished:

- unplug Auto Shut-Down (ASD) relay from Power Distribution Center (PDC) to prevent engine from starting
- place transmission in NEUTRAL (manual transmission) or PARK (automatic transmission)
- parking brake is applied
- battery is fully-charged (see Battery, in this group).

(1) Connect positive lead of voltmeter to battery negative post. Connect negative lead of voltmeter to battery negative cable clamp (Fig. 3). Rotate and hold ignition switch in the START position. Observe voltmeter. If voltage is detected, correct poor contact between cable clamp and post.

(2) Connect positive lead of voltmeter to battery positive post. Connect negative lead of voltmeter to battery positive cable clamp (Fig. 3). Rotate and hold ignition switch in the START position. Observe voltmeter. If voltage is detected, correct poor contact between cable clamp and post.

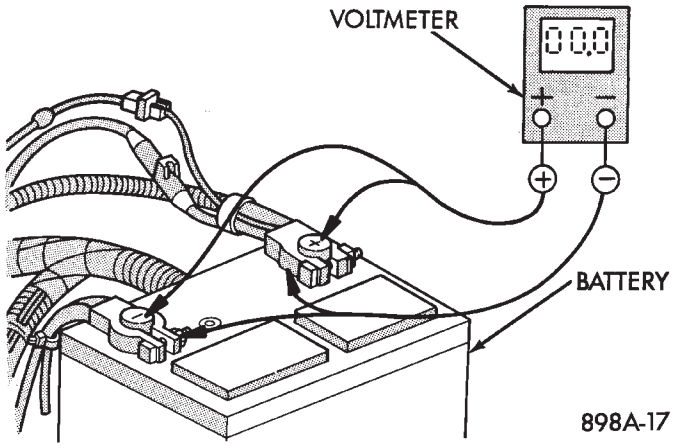

Fig. 3 Test Battery Connection Resistance

(3) Connect voltmeter to measure between the battery positive post and the starter solenoid battery stud (Fig. 4). Rotate and hold ignition switch in the START position. Observe voltmeter. If voltage reads above 0.2 volt, correct poor contact at battery cable to solenoid connection. Repeat test. If reading is still above 0.2 volt, replace battery positive cable.

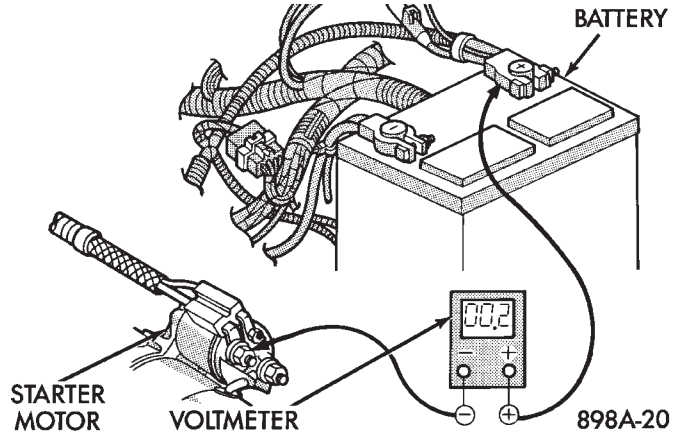

Fig. 4 Test Battery Positive Cable Resistance (Typical)

(4) Connect voltmeter to measure between the battery negative post and a good clean ground on the engine block (Fig. 5). Rotate and hold ignition switch in the START position. Observe voltmeter. If voltage reads above 0.2 volt, correct poor contact at battery negative cable attaching point. Repeat test. If reading is still above 0.2 volt, replace battery negative cable.

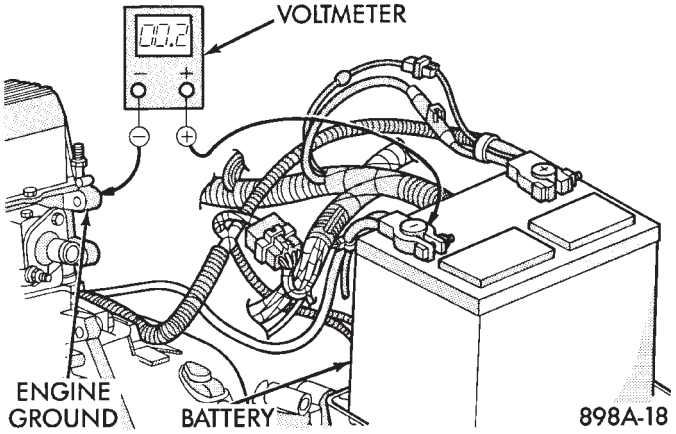

Fig. 5 Test Ground Circuit Resistance

(5) Connect positive lead of voltmeter to starter housing. Connect negative lead of voltmeter to battery negative terminal (Fig. 6). Rotate and hold ignition switch in the START position. Observe voltmeter. If voltage reads above 0.2 volt, correct poor starter to engine ground.

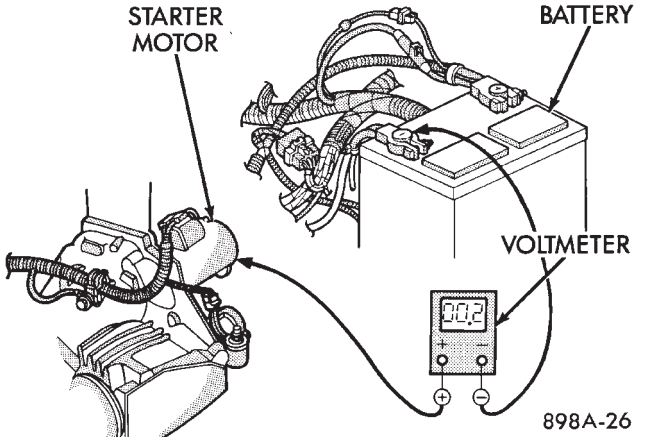

Fig. 6 Test Starter Ground (Typical)

If resistance tests detect no feed circuit problems, remove the starter and see Solenoid Test in this group.

CONTROL CIRCUIT TESTS

The starter control circuit consists of:

- starter solenoid
- starter relay
- ignition switch
- park/neutral position switch (automatic transmission)
- wiring harness and connections.

Test procedures for these components are as follows, and should be followed in the order described.

CAUTION: Before performing any test, unplug Auto Shut-Down (ASD) relay from Power Distribution Center (PDC) to prevent engine from starting.

SOLENOID TEST

Refer to Group 8B - Battery/Starter/Generator Service for starter removal procedures.

(1) Disconnect solenoid field coil wire from field coil terminal.

(2) Check for continuity between solenoid terminal and field coil terminal with a continuity tester. There should be continuity (Fig. 7).

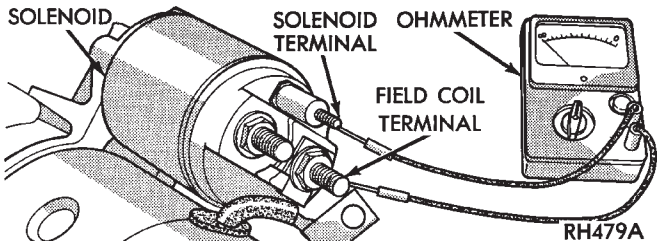

Fig. 7 Continuity Test Between Solenoid Terminal and Field Coil Terminal

(3) Check for continuity between solenoid terminal and solenoid case. There should be continuity (Fig. 8).

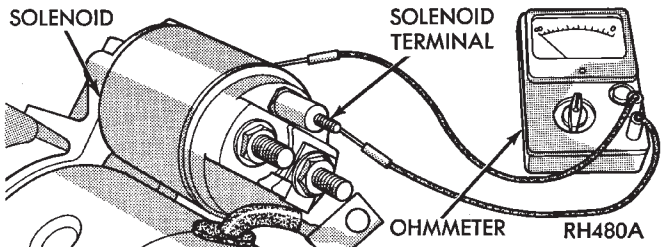

Fig. 8 Continuity Test Between Solenoid Terminal and Solenoid Case

(4) If there is continuity, solenoid is good. If there is no continuity in either test, solenoid has an open circuit and is faulty. Replace starter assembly.

(5) Connect solenoid field coil wire to field coil terminal.

(6) Install starter as described in Group 8B - Battery/Starter/Generator Service.

RELAY TEST

The starter relay is in the Power Distribution Center (PDC)(Figs. 9 or 10). Refer to the underside of the PDC cover for relay location.

Remove starter relay from PDC to perform the following tests:

(1) A relay in the de-energized position should have continuity between terminals 87A and 30, and no continuity between terminals 87 and 30. If OK, go to next step. If not OK, replace faulty relay.

(2) Resistance between terminals 85 and 86 (electromagnet) should be 75±5 ohms. If OK, go to next step. If not OK, replace faulty relay.

(3) Connect a battery to terminals 85 and 86. There should now be continuity between terminals 30 and 87, and no continuity between terminals 87A and 30. If OK, go to Relay Circuit Test. If not OK, replace faulty relay.

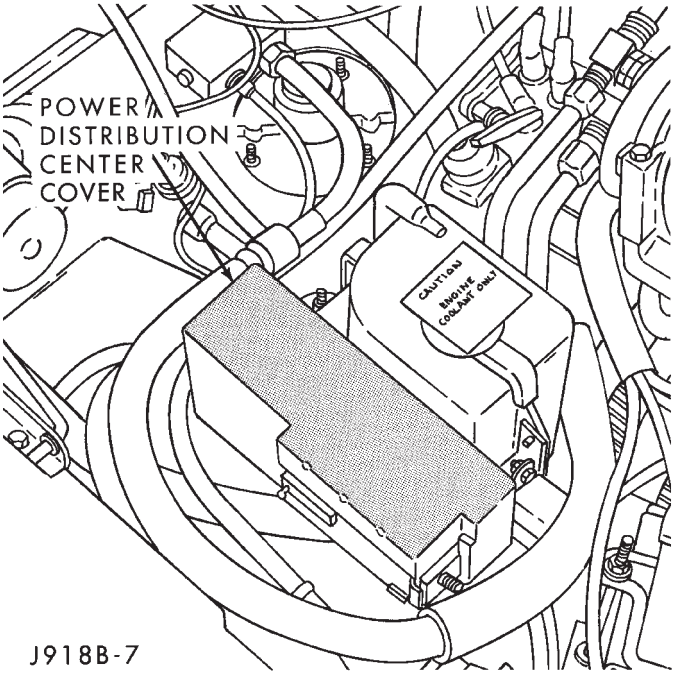

Fig. 9 Power Distribution Center—XJ

RELAY CIRCUIT TEST

(1) The common feed terminal (30) is connected to battery voltage and should be hot at all times. If OK, go to next step. If not OK, check circuit to fuse (F4 for YJ, F10 for XJ) in Power Distribution Center (PDC). Repair as required.

(2) The normally closed terminal (87A) is connected to terminal 30 in the de-energized position, but is not used for this application. Go to next step.

(3) The normally open terminal (87) is connected to the battery terminal (30) in the energized position. This terminal supplies battery voltage to the starter solenoid field coils. There should be continuity between cavity for relay terminal 87 and the starter solenoid terminal at all times. If OK, go to next step. If not OK, repair circuit to solenoid as required.

(4) The coil battery terminal (86) is connected to the electromagnet in the relay. It is energized when the ignition switch is in the START position. Check for battery voltage at cavity for relay terminal 86

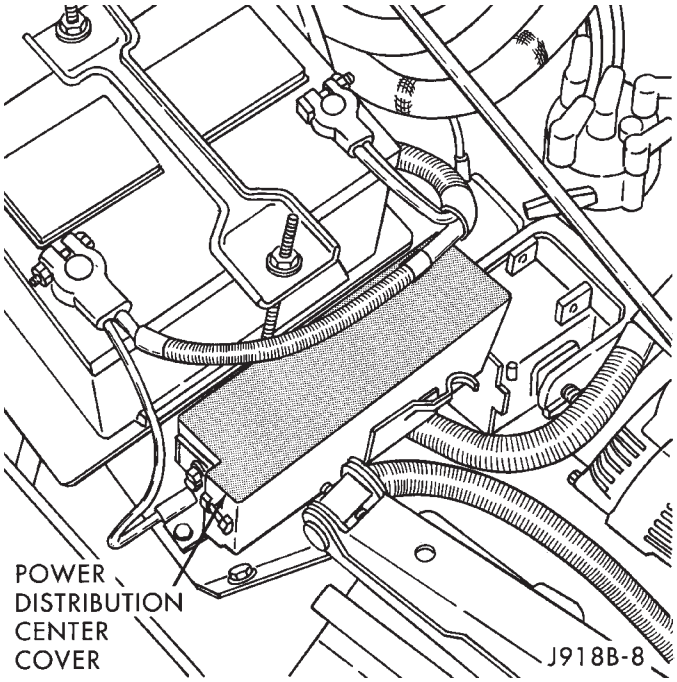

Fig. 10 Power Distribution Center—YJ

STARTER RELAY CONNECTIONS

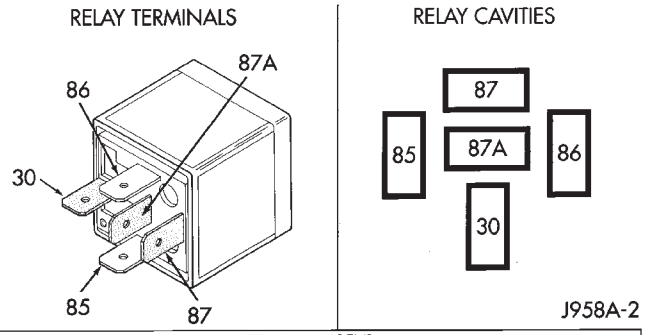

TERMINAL LEGEND	
NUMBER	IDENTIFICATION
30	COMMON FEED
85	COIL GROUND
86	COIL BATTERY
87	NORMALLY OPEN
87A	NORMALLY CLOSED

with ignition switch in the START position. If OK, go to next step. If not OK, refer to Group 8D - Ignition Systems for testing and service of the ignition switch.

(5) The coil ground terminal (85) is connected to the electromagnet in the relay. On vehicles with an automatic transmission, it is grounded through the park/neutral position switch. On vehicles with a manual transmission, it is grounded at all times. Check for continuity to ground at cavity for relay terminal 85. If not OK and vehicle has manual transmission, repair circuit as required. If not OK and vehicle has automatic transmission, refer to Group 21 - Transmission and Transfer Case for testing and service of the park/neutral position switch.

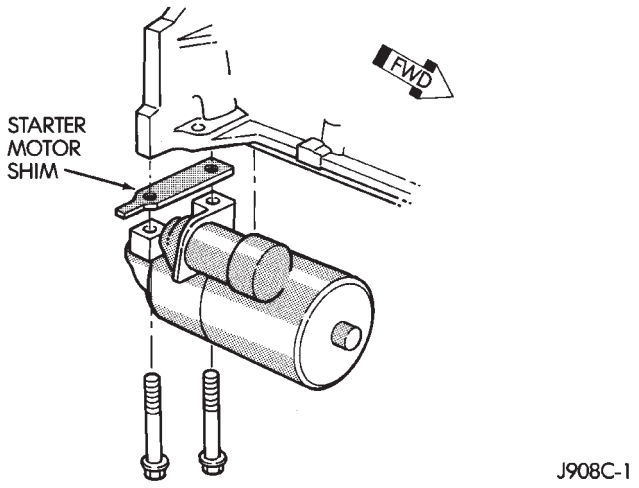

Fig. 11 Starter Shim

IGNITION SWITCH TEST

Refer to Group 8D - Ignition Systems for testing and service of this component.

PARK/NEUTRAL POSITION SWITCH TEST

Refer to Group 21 - Transmission and Transfer Case for testing and service of this component.

2.5L STARTER NOISE DIAGNOSIS

See Starter Noise Diagnosis chart. If the complaint is similar to Conditions 1 and 2 in chart, correction can be achieved by shimming starter according to the following procedures:

Disconnect the battery negative cable to prevent inadvertent starting of engine.

(1) If the complaint is similar to Condition 1, the starter must be moved toward the flywheel/drive plate ring gear by removing shims (Fig. 11).

Shim thickness is 0.381 mm (0.015 in.) and shims may be stacked if required.

(2) If the complaint is similar to Condition 2, the starter must be moved away from the flywheel/drive plate ring gear. This is done by installing shim(s) across both mounting pads. More than one shim may be required.

This is generally a condition that causes broken flywheel/drive plate ring gear teeth or broken starter housings.

STARTER NOISE DIAGNOSIS

CONDITION	POSSIBLE CAUSE	CORRECTION
1. VERY HIGH FREQUENCY WHINE BEFORE ENGINE STARTS; ENGINE STARTS OK.	1. Excessive distance between pinion gear and flywheel/drive plate gear.	1. Move starter motor toward flywheel/drive plate by removing shim(s), if possible.
2. VERY HIGH FREQUENCY WHINE AFTER ENGINE STARTS WITH IGNITION KEY RELEASED. ENGINE STARTS OK.	2. Insufficient distance between starter motor pinion gear and flywheel/drive plate runout can cause noise to be intermittent.	2. Shim starter motor away from flywheel/drive plate. Inspect flywheel/drive plate for damage; bent, unusual wear, and excessive runout. Replace flywheel/drive plate as necessary.
3. A LOUD "WHOOP" AFTER ENGINE STARTS WHILE STARTER MOTOR IS ENGAGED.	3. Most probably cause is defective overrunning clutch.	3. Replace starter motor.
4. A "RUMBLE," "GROWL," OR "KNOCK" AS STARTER MOTOR COASTS TO STOP AFTER ENGINE STARTS.	4. Most probable cause is bent or unbalanced starter motor armature.	4. Replace starter motor.

NOTE: A high frequency whine during cranking is normal for this starter motor.

J958A-5

CHARGING SYSTEM

GENERAL INFORMATION

The charging system consists of:

- generator
- voltage regulator circuitry (within PCM)
- ignition switch
- battery
- generator warning lamp or voltmeter (depending on vehicle equipment)
- wiring harness and connections.

Following is a general description of the major charging system components. Refer to Group 8W - Wiring Diagrams for complete circuit descriptions and diagrams.

The charging system is turned on and off with the ignition switch. When the ignition switch is turned to the ON position, battery voltage is applied to the generator rotor through one of the two field terminals to produce a magnetic field. The generator is driven by the engine through a serpentine belt and pulley arrangement.

As the energized rotor begins to rotate within the generator, the spinning magnetic field induces a current into the windings of the stator coil. Once the generator begins producing sufficient current, it also provides the current needed to energize the rotor.

The wye (Y) type stator winding connections deliver the induced AC current to 3 positive and 3 negative diodes for rectification. From the diodes, rectified DC current is delivered to the vehicle electrical system through the generator battery and ground terminals.

The amount of DC current produced by the generator is controlled by the generator voltage regulator (field control) circuitry, contained within the Powertrain Control Module (PCM)(Fig. 1). This circuitry is connected in series with the second rotor field terminal and ground.

Voltage is regulated by cycling the ground path to control the strength of the rotor magnetic field. The generator voltage regulator circuitry monitors system line voltage and ambient temperature. It then compensates and regulates generator current output accordingly.

The generator is serviced only as a complete assembly. If the generator fails for any reason, the entire assembly must be replaced. The generator voltage regulator (field control) circuitry can be serviced only by replacing the entire PCM.

All vehicles are equipped with On-Board Diagnostics (OBD). All OBD-sensed systems, including the generator voltage regulator (field control) circuitry, are monitored by the PCM. Each monitored circuit is assigned a Diagnostic Trouble Code (DTC). The PCM will store a DTC in electronic memory for any failure it detects. See Using On-Board Diagnostic System in this group for more information.

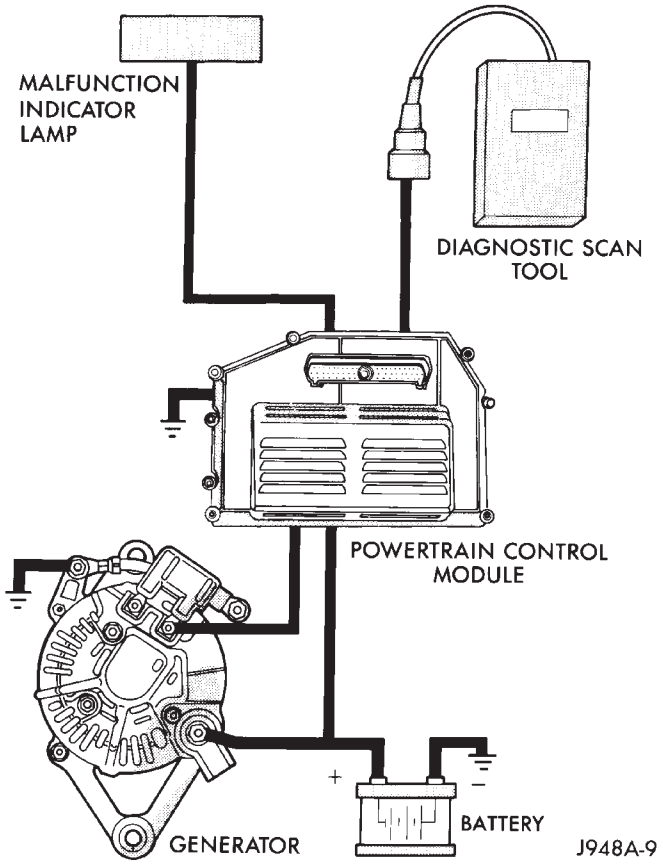

Fig. 1 Charging System Components (Typical)

DIAGNOSIS

When operating normally, the indicator lamp on models with the base instrument cluster will light when the ignition switch is turned to the ON or START position. After the engine starts, the indicator lamp goes off. With the engine running, the charge indicator lamp should light only when there is a problem in the charging system (base cluster only).

On models with a voltmeter, when the ignition switch is turned to the ON position, battery potential will register on the meter. During engine cranking a lower voltage will appear on the meter. With the engine running, a voltage reading higher than the first reading (ignition in ON) should register.

The following procedures may be used to diagnose the charging system if:

- the indicator or voltmeter do not operate properly
- an undercharged or overcharged battery condition occurs.

Remember that an undercharged battery is often caused by:

• accessories being left on with the engine not running
• a faulty or improperly adjusted switch that allows a lamp to stay on (see Ignition-Off Draw, in this group).

INSPECTION

(1) Inspect condition of battery cable terminals, battery posts, connections at engine block, starter solenoid and relay. They should be clean and tight. Repair as required.

(2) Inspect all fuses in the fuseblock module and Power Distribution Center (PDC) for tightness in receptacles. They should be properly installed and tight. Repair or replace as required.

(3) Inspect the electrolyte level in the battery. If cell caps are removable, add water if required. If cell caps are not removable, replace battery if electrolyte level is low.

(4) Inspect generator mounting bolts for tightness. Replace or tighten bolts, if required. Refer to Group 8B - Battery/Starter/Generator Service for torque specifications.

(5) Inspect generator drive belt condition and tension. Tighten or replace belt as required. Refer to Belt Tension Specifications in Group 7 - Cooling System.

(6) Inspect connections at generator field, battery output, and ground terminals. Also check ground connection at engine. They should all be clean and tight. Repair as required.

OUTPUT WIRE RESISTANCE TEST

This test will show the amount of voltage drop across the generator output wire, from the generator battery terminal to the battery positive post.

PREPARATION

(1) Before starting test make sure vehicle has a fully-charged battery. See Battery in this group for more information.

(2) Turn ignition switch to OFF.

(3) Disconnect negative cable from battery.

(4) Disconnect generator output wire from generator battery output terminal.

(5) Connect a 0-150 ampere scale DC ammeter (Fig. 2). Install in series between generator battery output terminal and disconnected generator output wire. Connect positive lead to generator battery output terminal and negative lead to disconnected generator output wire.

(6) Connect positive lead of a test voltmeter (range 0-18 volts minimum) to disconnected generator output wire. Connect negative lead of test voltmeter to battery positive cable at positive post.

(7) Connect one end of a jumper wire to ground and with other end probe green K20 field wire at back of generator (Fig. 2). This will generate a DTC.

CAUTION: Do not connect green/orange A142 field wire to ground. Refer to Group 8W - Wiring Diagrams for more information.

(8) Connect an engine tachometer, then connect battery negative cable to battery.

(9) Connect a variable carbon pile rheostat between battery terminals. Be sure carbon pile is in OPEN or OFF position before connecting leads. See Load Test in this group for instructions.

TEST

(1) Start engine. Immediately after starting, reduce engine speed to idle.

(2) Adjust engine speed and carbon pile to maintain 20 amperes flowing in circuit. Observe voltmeter reading. Voltmeter reading should not exceed 0.5 volts.

RESULTS

If a higher voltage drop is indicated, inspect, clean and tighten all connections. This includes any connection between generator battery output terminal and battery positive post. A voltage drop test may be performed at each connection to locate the connection with excessive resistance. If resistance tests satisfactorily, reduce engine speed, turn OFF carbon pile and turn OFF ignition switch.

(1) Disconnect negative cable from battery.

(2) Remove test ammeter, voltmeter, carbon pile, and tachometer.

(3) Remove jumper wire.

(4) Connect generator output wire to generator battery output terminal. Tighten nut to 8.5±1.5 N·m (75±15 in. lbs.).

(5) Connect negative cable to battery.

(6) Use DRB scan tool to erase DTC.

CURRENT OUTPUT TEST

The generator current output test determines whether generator can deliver its rated current output.

PREPARATION

(1) Before starting test make sure vehicle has a fully-charged battery. See Battery in this group for more information.

(2) Disconnect negative cable from battery.

(3) Disconnect generator output wire at the generator battery output terminal.

(4) Connect a 0-150 ampere scale DC ammeter (Fig. 3). Install in series between generator battery output terminal and disconnected generator output wire. Connect positive lead to generator battery output terminal and negative lead to disconnected generator output wire.

CHARGING SYSTEM DIAGNOSIS

CONDITION	POSSIBLE CAUSES	CORRECTION
LOW OR UNSTEADY CHARGING.	1. Battery discharged or faulty.	1. See Battery, in this group. Charge or replace battery, if required.
	2. Loose or faulty generator drive belt.	2. Refer to Group 7 – Cooling System, for belt inspection and tightening procedures. Replace or tighten belt, if required.
	3. Loose generator mounting.	3. Refer to Group 8B - Battery/Starter/Generator Service, for generator service procedures. Tighten generator mounting, if required.
	4. Loose or corroded charging circuit wiring connections.	4. Inspect all charging circuit connections, including grounds and fuses. Clean or tighten, if required.
	5. High resistance in generator output wire.	5. See Ouput Wire Resistance Test, in this group. Test and repair, if required.
	6. Generator assembly faulty.	6. See Current Output Test, in this group. Test and replace, if required.
	7. Faulty generator field control circuit.	7. See Using On-Board Diagnostic System, in this group. Diagnose and repair, if required.
OVER-CHARGING.	1. Short in generator field control circuit.	1. See Using On-Board Diagnostic System, in this group. Diagnose and repair, if required.
	2. Generator assembly faulty.	2. See Current Output Test, in this group. Test and replace, if required.
GENERATOR NOISY.	1. Loose, worn, or damaged drive belt.	1. Refer to Group 7 – Cooling System, for diagnosis and repair of drive belt problems
	2. Drive belt pulleys misaligned.	2. Refer to Group 7 – Cooling System, for diagnosis and repair of pulley misalignment.
	3. Generator assembly faulty.	3. Refer to Group 8B – Batttery/Starter/Generator Service, for generator service procedures.

J958A-12

(5) Connect positive lead of a test voltmeter (range 0-18 volts minimum) to generator battery output terminal.

(6) Connect negative lead of test voltmeter to a good ground.

(7) Connect an engine tachometer, then connect battery negative cable to battery.

(8) Connect a variable carbon pile rheostat between battery terminals. Be sure carbon pile is in OPEN or OFF position before connecting leads. See Load Test in this group for instructions.

(9) Connect one end of a jumper wire to ground and with other end probe green K20 field wire at back of generator (Fig. 3). This will generate a DTC.

CAUTION: Do not connect green/orange A142 field wire to ground. Refer to Group 8W - Wiring Diagrams for more information.

TEST

(1) Start engine. Immediately after starting, reduce engine speed to idle.

(2) Adjust carbon pile and engine speed in increments until a speed of 1250 rpm and voltmeter reading of 15 volts is obtained.

CAUTION: Do not allow voltage meter to read above 16 volts.

(3) The ammeter reading must be within limits shown in Generator Output Voltage Specifications.

RESULTS

(1) If reading is less than specified and generator output wire resistance is not excessive, generator should be replaced. Refer to Group 8B - Battery/Starter/Generator Service.

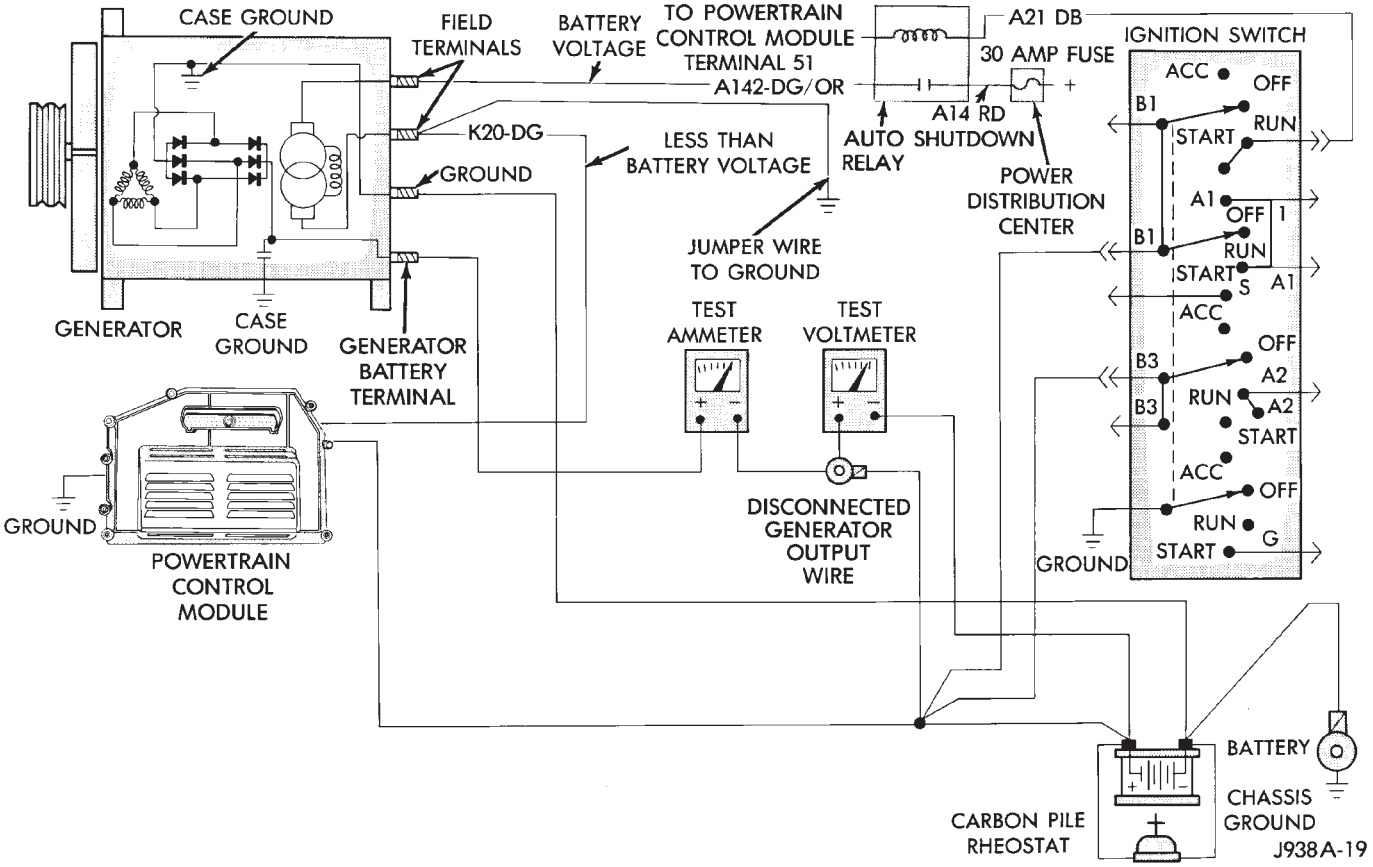

Fig. 2 Generator Output Wire Resistance Test (Typical)

(2) After current output test is completed, reduce engine speed, turn OFF carbon pile and turn OFF ignition switch.

(3) Disconnect negative cable from battery.

(4) Remove test ammeter, voltmeter, tachometer and carbon pile.

(5) Remove jumper wire (Fig. 3).

(6) Connect generator output wire to generator battery output terminal. Tighten nut to 8.5±1.5 N·m (75±15 in. lbs.).

(7) Connect negative cable to battery.

(8) Use DRB scan tool to erase DTC.

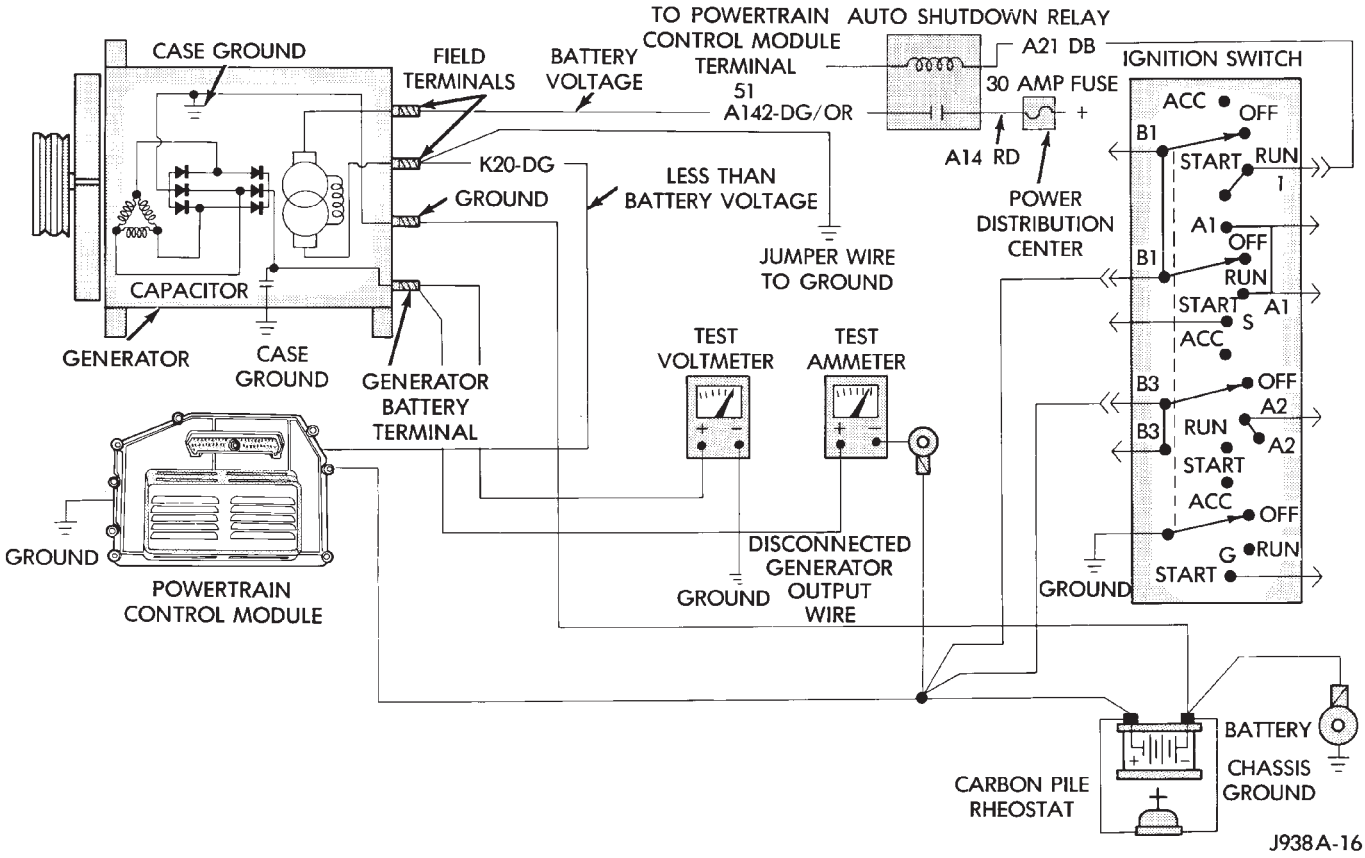

Fig. 3 Generator Current Output Test (Typical)

USING ON-BOARD DIAGNOSTIC SYSTEM

GENERAL INFORMATION

The Powertrain Control Module (PCM) monitors critical input and output circuits of the charging system, making sure they are operational. A Diagnostic Trouble Code (DTC) is assigned to each input and output circuit monitored by the OBD system. Some circuits are checked continuously and some are checked only under certain conditions.

If the OBD system senses that a monitored circuit is bad, it will put a DTC into electronic memory. The DTC will stay in electronic memory as long as the circuit continues to be bad. The PCM is programmed to clear the memory after 50 engine starts, if the problem does not occur again.

DIAGNOSTIC TROUBLE CODES

Diagnostic Trouble Codes (DTC) are two-digit numbers flashed on the malfunction indicator (Check Engine) lamp that identify which circuit is bad. A DTC description can also be read using the DRB scan tool. Refer to Group 14 - Fuel Systems for more information.

A DTC does not identify which component in a circuit is bad. Thus, a DTC should be treated as a symptom, not as the cause for the problem. In some cases, because of the design of the diagnostic test procedure, a DTC can be the reason for another DTC to be set. Therefore, it is important that the test procedures be followed in sequence, to understand what caused a DTC to be set.

See Generator Diagnostic Trouble Code chart for DTC's which apply to the charging system. Refer to the Powertrain Diagnostic Procedures manual to diagnose an on-board diagnostic system trouble code.

RETRIEVING DIAGNOSTIC TROUBLE CODES

To start this function, cycle the ignition switch ON-OFF-ON-OFF-ON within 5 seconds. This will cause any DTC stored in the PCM memory to be displayed. The malfunction indicator (Check Engine) lamp will display a DTC by flashing on and off. There is a short pause between flashes and a longer pause between digits. All DTC's displayed are two-digit numbers, with a four-second pause between codes.

An example of a DTC is as follows:

(1) Lamp on for 2 seconds, then turns off.

(2) Lamp flashes 4 times pauses and then flashes 1 time.

(3) Lamp pauses for 4 seconds, flashes 4 times, pauses, then flashes 7 times.

The two DTC's are 41 and 47. Any number of DTC's can be displayed, as long as they are in memory. The lamp will flash until all stored DTC's are displayed (55 = end of test).

GENERATOR DIAGNOSTIC TROUBLE CODE

Diagnostic Trouble Code	DRB Scan Tool Display	Description of Diagnostic Trouble Code
12*	Battery Disconnect	Direct battery input to PCM was disconnected within the last 50 key-on cycles.
41**	Generator Field Not Switching Properly	An open or shorted condition detected in the generator field control circuit.
46**	Charging System Voltage Too High	Battery voltage sense input above target charging voltage during engine operation.
47**	Charging System Voltage Too Low	Battery voltage sense input below target charging during engine operation. Also, no significant change detected in battery voltage during active test of generator output.
55*	N/A	Completion of fault code display on Check Engine lamp.

* Check Engine lamp will not illuminate at all times if this Diagnostic Trouble Code was recorded. Cycle ignition key as described in manual and observe code flashed by Check Engine lamp.

** Check Engine lamp will illuminate during engine operation if this Diagnostic Trouble Code was recorded.

J958A-7

SPECIFICATIONS

BATTERY SPECIFICATIONS

BATTERY CLASSIFICATIONS AND RATINGS

Group Size	Cold Crank AMPS	Reserve Capacity (Min.)	Engine	Vehicle Series
58	430	80	2.5L & 4.0L	All
58	500	85	2.5L, 4.0L	All

J928A-1

STARTING SYSTEM SPECIFICATIONS

4.0L STARTER AND SOLENOID TESTING SPECIFICATIONS

Description	Specifications @ 20°C (68°F)
No Load Test With 11.2 volts Max. Amps Min. RPM	 80 2500
Solenoid Hold-in Winding Voltage	3.5V Max.
Solenoid Pull-in Winding Voltage	7.8V Max.

J958A-8

4.0L STARTING SYSTEM COLD CRANKING SPECIFICATIONS

Description	Specifications @ 20°C (68°F)
Battery Test Voltage	12.5 Volts
Cold Cranking Voltage (Minimum)	9.6 Volts
Cold Cranking Amps	160 Amps

J958A-9

2.5L STARTER AND SOLENOID TESTING SPECIFICATIONS

Description	Specifications @ 20°C (68°F)
No Load Test With 11.2 volts Max. Amps Min. RPM	 90 2600
Solenoid Hold-in Winding Voltage	2.6V-3.5V Max.
Solenoid Pull-in Winding Voltage	6V-7.8V Max.

J958A-10

2.5L STARTING SYSTEM COLD CRANKING SPECIFICATIONS

Battery Test Voltage	12.5 Volts
Cold Cranking Voltage (Minimum)	9.6 Volts
Cold Cranking Amps	130 Amps

J918B-17

CHARGING SYSTEM SPECIFICATIONS

OUTPUT VOLTAGE SPECIFICATIONS

PCM Temperature °C (°F)	Acceptable Voltage Range
– 40 to – 6.7 (– 40 to 20)	14.5 to 15.0
– 6.7 to 26.7 (20 to 80)	13.87 to 15.0
26.7 to 60 (80 to 140)	13.25 to 14.37
60 to 71.1 (140 to 160)	13.25 to 13.75

J938B-25

GENERATOR RATINGS

Type	Part Number	Engine	Rating
Nippondenso	56005684	2.5L & 4.0L	75
Nippondenso	56005685	2.5L & 4.0L	90

J918C-11

BATTERY/STARTER/GENERATOR SERVICE

CONTENTS

	page		page
BATTERY	1	SPECIFICATIONS	8
GENERATOR	6	STARTER AND STARTER RELAY	4

GENERAL INFORMATION

Group 8B covers battery, starter and generator service procedures. For diagnosis of these components and their related systems, refer to Group 8A - Battery/Starting/Charging Systems Diagnostics. Refer to Group 8W - Wiring Diagrams for complete circuit descriptions and diagrams.

BATTERY

GENERAL INFORMATION

This section covers battery service procedures only. For battery maintenance procedures, refer to Group 0 - Lubrication and Maintenance. While battery charging can be considered a service or maintenance procedure, this information is located in Group 8A - Battery/Starting/Charging Systems Diagnostics. This was done because the battery must be fully charged before any diagnosis is performed.

It is important that the battery, starting, and charging systems be thoroughly tested and inspected any time a battery needs to be charged or replaced. The cause of abnormal discharge, over-charging, or premature failure of the battery must be diagnosed and corrected before a battery is replaced or returned to service. Refer to Group 8A - Battery/Starting/Charging Systems Diagnostics.

The factory installed low-maintenance battery (Fig. 1) has removable battery cell caps. Water can be added to this battery. The battery is not sealed and has vent holes in the cell caps. The chemical composition within the low-maintenance battery reduces battery gassing and water loss at normal charge and discharge rates. Therefore, the battery should not require additional water in normal service.

However, low electrolyte can be caused by an overcharging condition. Be certain to diagnose charging system before returning vehicle to service. Refer to Group 8A - Battery/Starting/Charging Systems Diagnostics for more information.

BATTERY REMOVE/INSTALL

(1) Turn ignition switch to OFF position. Make sure all electrical accessories are off.

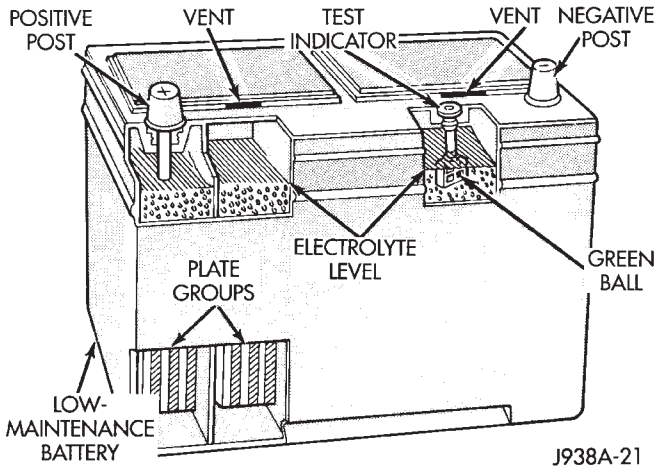

Fig. 1 Low-Maintenance Battery

(2) Loosen the cable terminal clamps and remove both battery cables, negative cable first. If necessary, use a puller to remove terminal clamps from battery posts (Fig. 2).

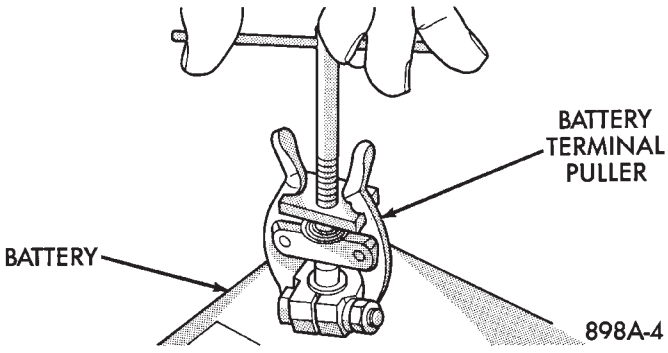

Fig. 2 Remove Battery Terminal Clamp

(3) Inspect the cable terminals for corrosion and damage. Remove corrosion using a wire brush or post

and terminal cleaning tool, and a sodium bicarbonate (baking soda) and warm water cleaning solution (Fig. 3). Replace cables that have damaged or deformed terminals.

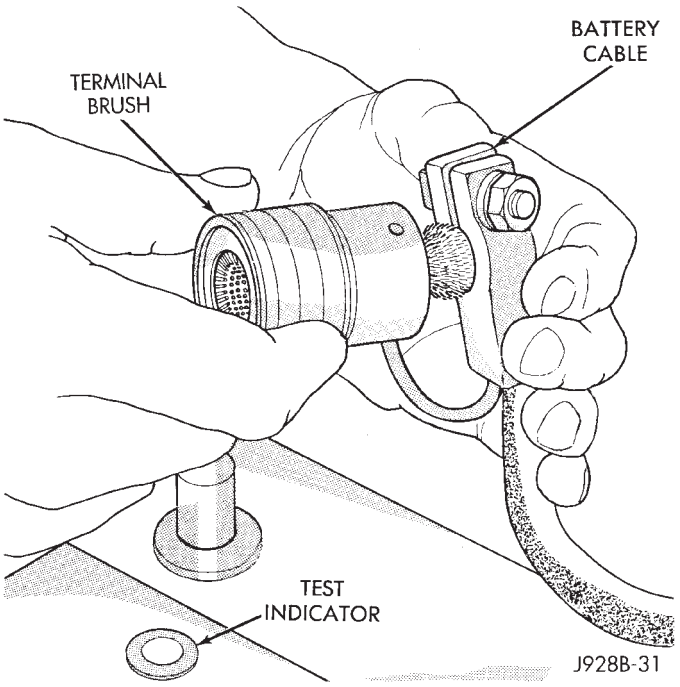

Fig. 3 Clean Battery Cable Terminal

WARNING: WEAR A SUITABLE PAIR OF RUBBER GLOVES (NOT THE HOUSEHOLD TYPE) WHEN REMOVING A BATTERY BY HAND. SAFETY GLASSES SHOULD ALSO BE WORN. IF THE BATTERY IS CRACKED OR LEAKING, THE ELECTROLYTE CAN BURN THE SKIN AND EYES.

(4) Remove battery holddowns (Fig. 4 or 5) and remove battery from vehicle.

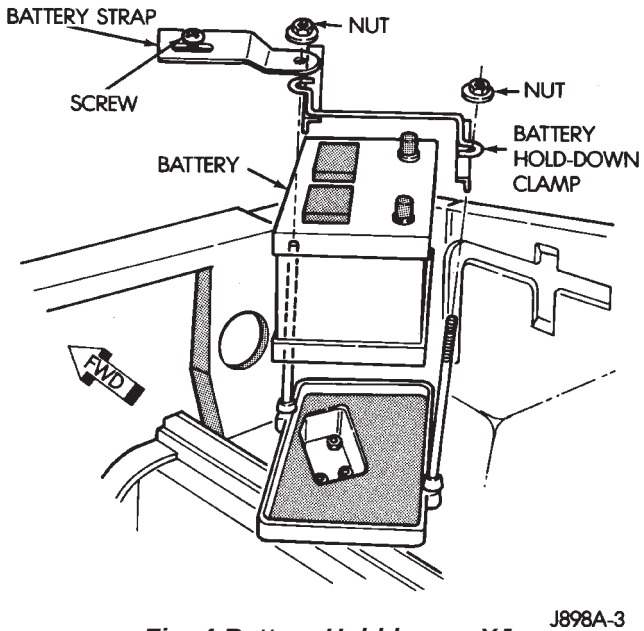

Fig. 4 Battery Holddown—XJ

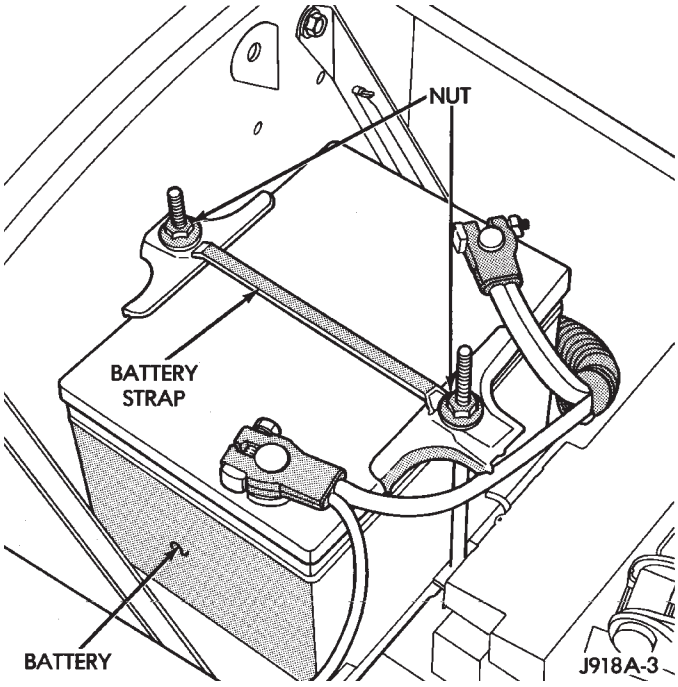

Fig. 5 Battery Holddown—YJ

(5) Inspect battery tray (Fig. 6 or 7) and holddowns for corrosion or damage. Remove corrosion using a wire brush and a sodium bicarbonate (baking soda) and warm water cleaning solution. Paint any exposed bare metal and replace any damaged parts.

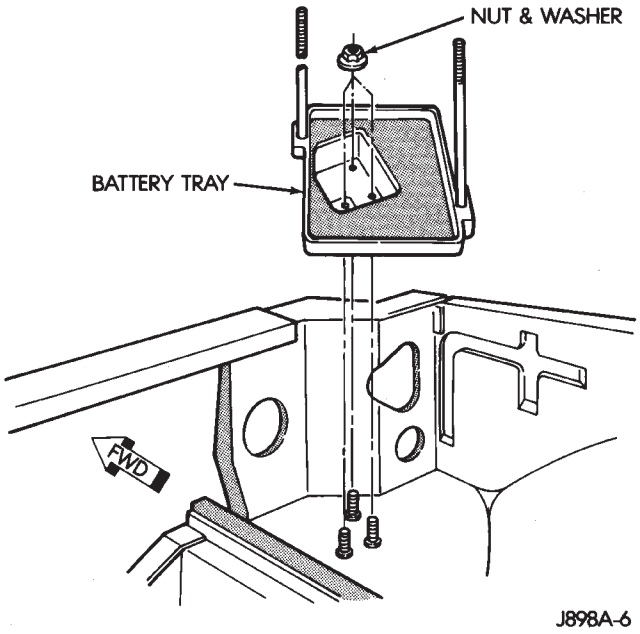

Fig. 6 Battery Tray—XJ

(6) Inspect the battery case for cracks or other damage that could result in electrolyte leaks. Also check battery terminal posts for looseness. Batteries with damaged cases or loose posts must be replaced.

(7) Check electrolyte level in the battery. Use a putty knife or other suitable wide-bladed flat tool to

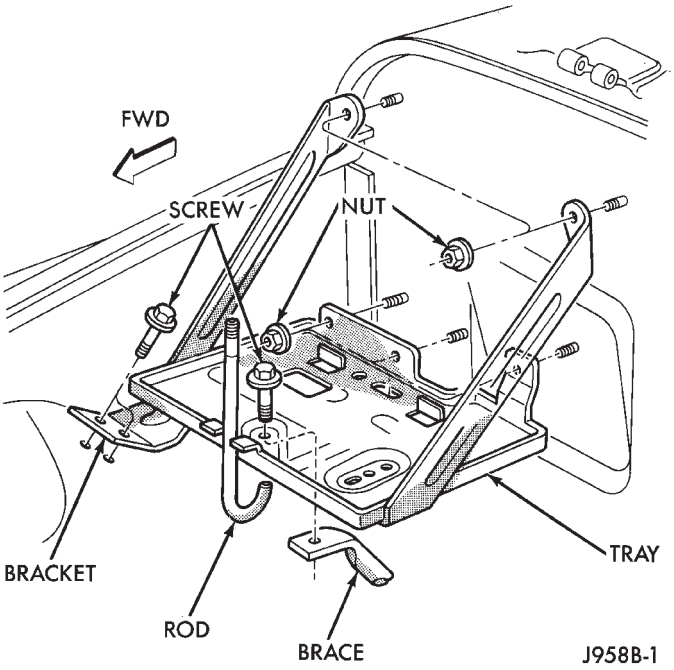

Fig. 7 Battery Tray—YJ

pry cell caps off (Fig. 8). Do not use a screwdriver. Add distilled water to each cell until the liquid reaches the bottom of the vent well. DO NOT OVER-FILL. If battery is discharged, charge as required. Refer to Group 8A - Battery/Starting/Charging Systems Diagnosis for more information.

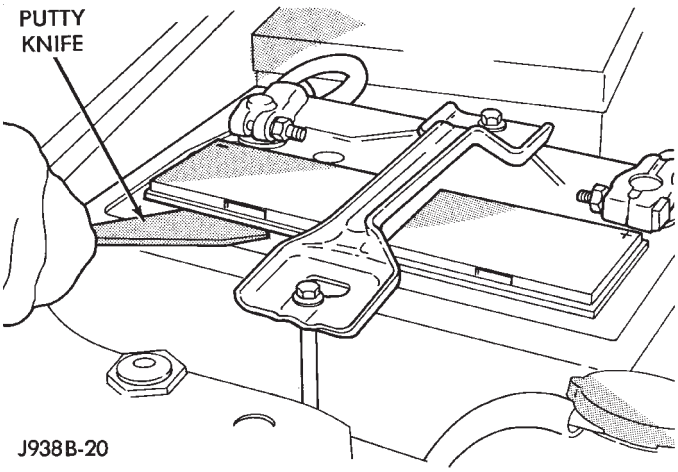

Fig. 8 Removing Cell Cap

(8) If the battery is to be reinstalled, clean outside of battery case and top cover with sodium bicarbonate (baking soda) and warm water cleaning solution (Fig. 9) to remove acid film. Flush with clean water. Ensure that cleaning solution does not enter cells through the vent holes. If the battery is being replaced, refer to Specifications in Group 8A - Battery/Starting/Charging Systems Diagnostics to confirm replacement has correct classification and ratings for the vehicle.

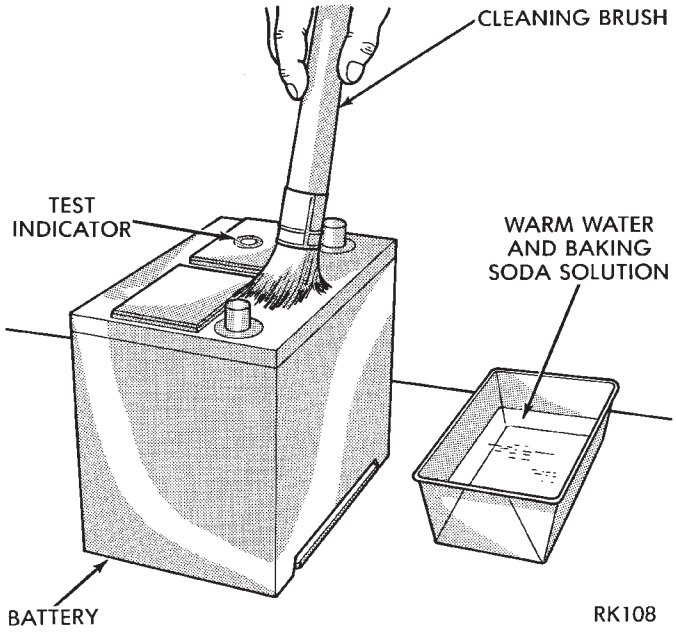

Fig. 9 Clean Battery

(9) Clean corrosion from battery posts (Fig. 10) with a wire brush or post and terminal cleaner, and sodium bicarbonate (baking soda) and warm water cleaning solution.

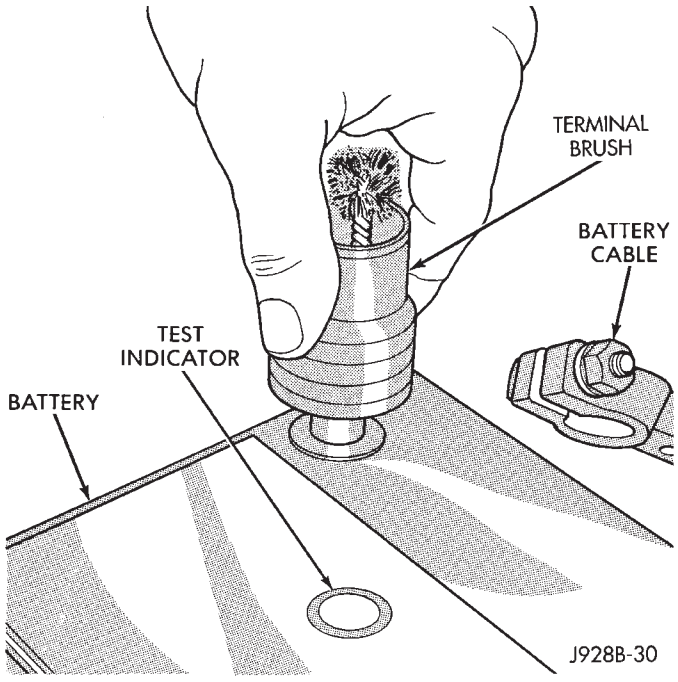

Fig. 10 Clean Battery Post

(10) Position battery in tray. Ensure that positive and negative posts are correctly positioned. The cable terminals must reach the correct battery post without stretching.

(11) Loosely install battery holddown hardware. Ensure that battery base is correctly positioned in tray, then tighten holddowns to 2.2 N·m (20 in. lbs.) torque.

CAUTION: Be certain that battery cables are connected to the correct battery terminals. Reverse polarity can damage electrical components.

(12) Place oiled felt washer on battery positive terminal post.

(13) Install and tighten battery positive cable terminal clamp. Then install and tighten negative cable terminal clamp. Both cable clamp bolts require torque of 8.5 N·m (75 in. lbs.).

(14) Apply a thin coating of petroleum jelly or chassis grease to cable terminals and battery posts.

STARTER AND STARTER RELAY

GENERAL INFORMATION

This section covers starter and starter relay service procedures only. For diagnostic procedures, refer to Group 8A - Battery/Starting/Charging Systems Diagnostics. Service procedures for other starting system components can be found as follows:

- battery - see Battery, in this group
- ignition switch - refer to Group 8D - Ignition Systems
- park/neutral position switch (automatic transmission) - refer to Group 21 - Transmission and Transfer Case
- wiring harness and connectors - refer to Group 8W - Wiring Diagrams.

STARTER

The starter motor incorporates several features to create a reliable, efficient, compact and lightweight unit. A planetary gear system (intermediate transmission) is used between the electric motor and pinion gear. This feature makes it possible to reduce the dimensions of the starter. At the same time, it allows higher armature rotational speed and delivers increased torque through the pinion gear to the flywheel or drive plate ring gear.

The use of a permanent magnet field also reduces starter size and weight. This field consists of six high-strength permanent magnets. The magnets are aligned according to their polarity and are permanently fixed in the starter field frame.

The starter motors for all engines are activated by a solenoid mounted to the overrunning clutch housing. However, the starter motor/solenoid are serviced only as a complete assembly. If either component fails, the entire assembly must be replaced.

This unit is highly sensitive to hammering, shocks and external pressure.

CAUTION: The starter motor MUST NOT BE CLAMPED in a vise by the starter field frame. Doing so may damage the magnets. It may be clamped by the mounting flange ONLY.

CAUTION: Do not connect starter motor incorrectly when tests are being performed. The permanent magnets may be damaged and rendered unserviceable.

STARTER RELAY

The starter relay is an International Standards Organization (ISO) type relay, and is located in the Power Distribution Center (PDC). Refer to underside of PDC cover for relay location.

STARTER REMOVE/INSTALL—2.5L

XJ MODELS

(1) Disconnect battery negative cable.

(2) Remove exhaust clamp from bracket (Fig. 11).

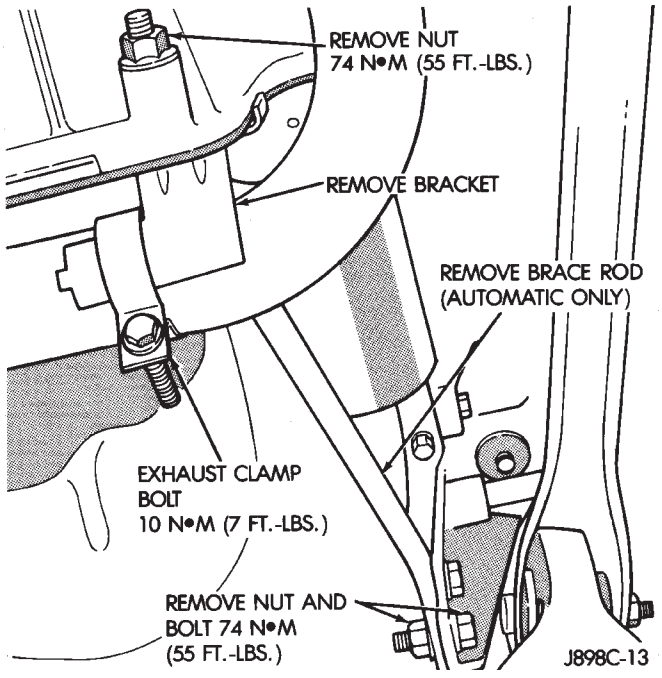

Fig. 11 Exhaust Clamp and Brace Remove (XJ—2.5L)

(3) Remove nut and bolt from forward end of brace rod (automatic transmission only).

(4) Remove nut from lower end of brace rod (automatic transmission only).

(5) Remove brace rod and bracket (automatic transmission only).

(6) Remove nut, bolt and bracket from bell housing (manual transmission only).

(7) Disconnect battery cable and solenoid feed wire from solenoid (Fig. 12).

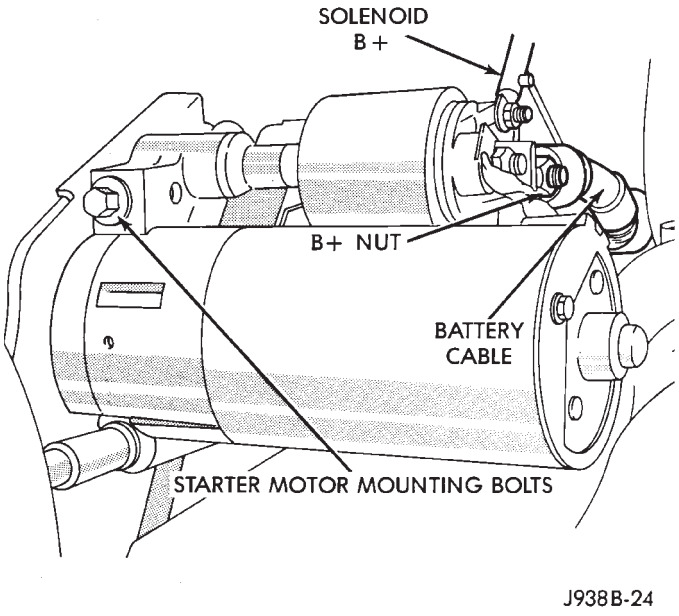

Fig. 12 Starter Remove/Install (XJ—2.5L)

(8) Remove starter mounting bolts, starter motor and shims.

Shim thickness available is 0.381 mm (0.015 in.). Refer to 2.5L Starter Noise Diagnosis in Group 8A - Battery/Starting/Charging Systems Diagnostics for proper shim selection.

(9) Reverse removal procedures to install and torque mounting hardware as shown in Specifications.

YJ MODELS

(1) Disconnect battery negative cable.

(2) Disconnect battery cable from solenoid battery terminal (Fig. 13).

(3) Disconnect solenoid feed wire.

(4) Remove starter mounting bolts.

(5) Remove starter motor and shims.

Shim thickness available is 0.381 mm (0.015 in.). Refer to 2.5L Starter Noise Diagnosis in Group 8A - Battery/Starting/Charging Systems Diagnosis for proper shim selection.

(6) Reverse removal procedures to install and torque mounting hardware as shown in Specifications.

STARTER REMOVE/INSTALL—4.0L

(1) Disconnect battery negative cable.

(2) Raise and support vehicle.

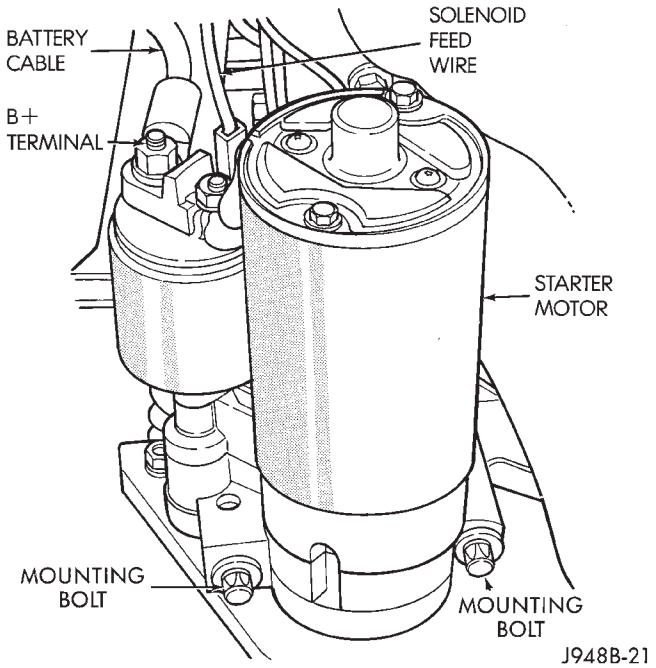

Fig. 13 Starter Remove/Install (YJ—2.5L)

(3) Disconnect battery cable and solenoid feed wire from solenoid.

(4) Remove starter lower mounting bolt (Fig. 14).

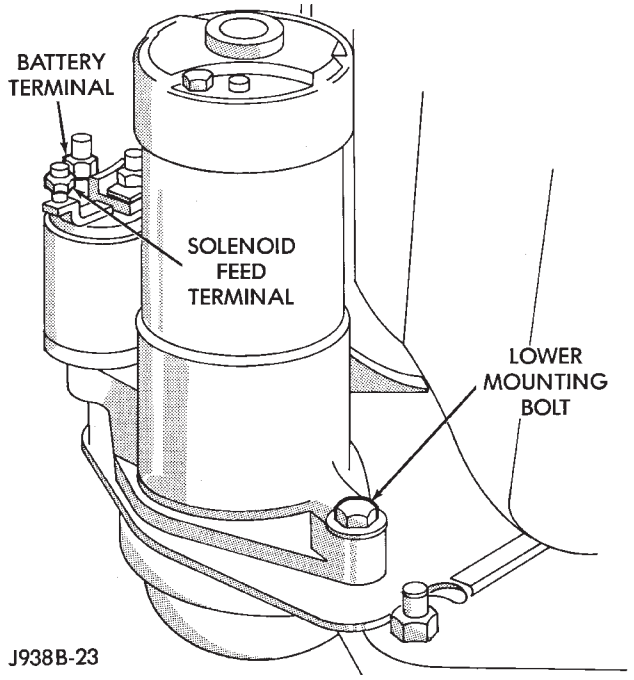

Fig. 14 Starter Remove/Install—4.0L

(5) Remove starter upper mounting bolt and remove starter.

(6) Reverse removal procedures to install and torque mounting hardware as shown in Specifications.

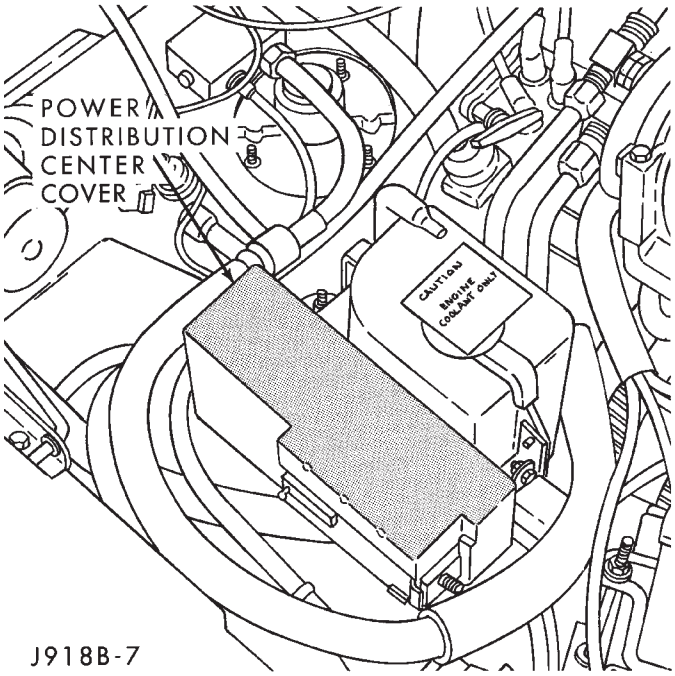

Fig. 15 Power Distribution Center—XJ

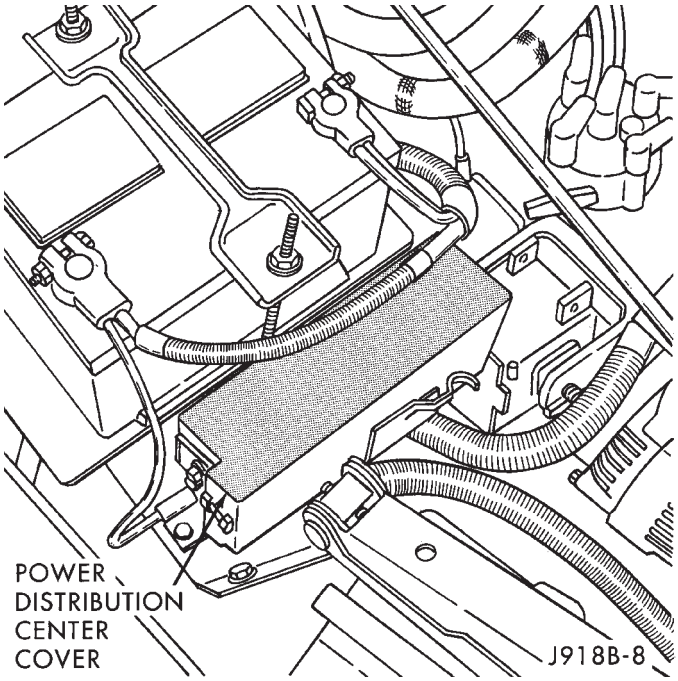

Fig. 16 Power Distribution Center—YJ

STARTER RELAY REMOVE/INSTALL

(1) Disconnect battery negative cable.

(2) Remove starter relay by unplugging unit from PDC (Fig. 15 or 16).

(3) Install starter relay by aligning relay terminals with cavities in PDC and plugging relay in.

(4) Connect negative cable to battery.

(5) Test relay operation.

GENERATOR

GENERAL INFORMATION

This section covers generator service procedures only. For generator or charging system diagnosis, refer to Group 8A - Battery/Starting/Charging Systems Diagnostics.

The generator is belt-driven by the engine. All engines use serpentine drive. The generator is serviced only as a complete assembly. If the generator fails for any reason, the entire assembly must be replaced.

Two generator output ratings are available, depending upon optional equipment. Be certain that the replacement generator has the same output rating as the original unit. Refer to Group 8A - Battery/Starting/Charging Systems Diagnostics and see Specifications.

The generator field control (voltage regulator) circuitry is internal to the Powertrain Control Module (PCM). If faulty, the entire PCM must be replaced. Refer to Group 14 - Fuel System for PCM service procedure.

GENERATOR REMOVE/INSTALL—LEFT-HAND DRIVE

WARNING: DISCONNECT NEGATIVE CABLE FROM BATTERY BEFORE REMOVING BATTERY OUTPUT WIRE FROM GENERATOR. FAILURE TO DO SO CAN RESULT IN INJURY.

ALL WITH 2.5L AND YJ WITH 4.0L

(1) Disconnect battery negative cable.

(2) Remove generator drive belt. Refer to Group 7 - Cooling System for procedure.

(3) Remove generator battery output terminal nut, 2 field terminal nuts, ground and harness holddown nuts (Fig. 17). Remove wire connector assembly.

(4) Remove 2 generator mounting bolts and remove generator from vehicle.

(5) Reverse removal procedure to install. Torque generator hardware as shown in Specifications.

CAUTION: Never force a belt over a pulley rim using a screwdriver. The synthetic fiber of the belt can be damaged.

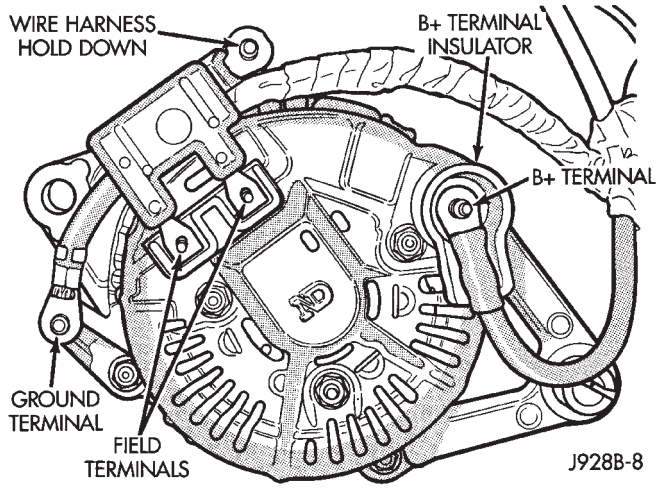

Fig. 17 Remove/Install Generator Connector

CAUTION: When installing a serpentine accessory drive belt, the belt MUST be routed correctly. The water pump will be rotating in the wrong direction if the belt is installed incorrectly, causing the engine to overheat. Refer to the belt routing label in engine compartment, or refer to Belt Schematics in Group 7 - Cooling System.

XJ WITH 4.0L

(1) Disconnect battery negative cable.

(2) Remove generator drive belt. Refer to Group 7 - Cooling System for procedure.

(3) Raise and support vehicle.

(4) Remove generator battery output terminal nut, 2 field terminal nuts, ground and harness holddown nuts (Fig. 17). Remove wire connector assembly.

(5) Remove 2 generator mounting bolts and remove generator from vehicle.

(6) Reverse removal procedure to install. Torque generator hardware as shown in Specifications.

CAUTION: Never force a belt over a pulley rim using a screwdriver. The synthetic fiber of the belt can be damaged.

CAUTION: When installing a serpentine accessory drive belt, the belt MUST be routed correctly. The water pump will be rotating in the wrong direction if the belt is installed incorrectly, causing the engine to overheat. Refer to the belt routing label in engine compartment, or refer to Belt Schematics in Group 7 - Cooling System.

GENERATOR REMOVE/INSTALL—RIGHT-HAND DRIVE

WARNING: DISCONNECT NEGATIVE CABLE FROM BATTERY BEFORE REMOVING BATTERY OUTPUT WIRE FROM GENERATOR. FAILURE TO DO SO CAN RESULT IN INJURY.

(1) Disconnect battery negative cable.

(2) Remove 2 screws holding electric cooling fan (Fig. 18).

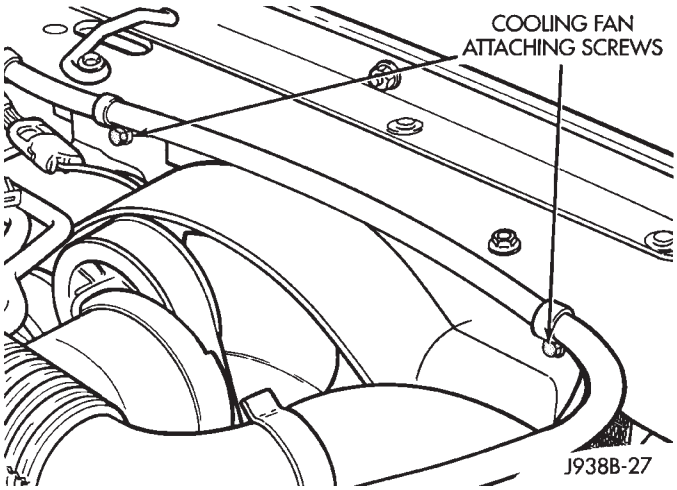

Fig. 18 Electric Cooling Fan Remove/Install

(3) Unplug electric cooling fan wiring connector and pull fan unit up and out of vehicle.

(4) Remove generator drive belt. Refer to Group 7 - Cooling System for procedure.

(5) Remove generator mounting bolts.

(6) Position generator to gain access to all of the wire connectors. Remove generator battery output terminal nut, 2 field terminal nuts, ground and harness holddown nuts (Fig. 17). Remove wire connector assembly.

(7) Remove generator from vehicle.

(8) Reverse removal procedure to install. Torque generator hardware as shown in Specifications.

SPECIFICATIONS

BATTERY SPECIFICATIONS

TORQUE

Description	Torque
Battery Strap Screw	2 N•m (20 in. lbs.)
Battery Tray Nut	2 N•m (20 in. lbs.)
Battery Clamp Nut	2 N•m (20 in. lbs.)

J928A-7

STARTER SPECIFICATIONS

TORQUE—2.5L

COMPONENTS	TORQUE
Starter Motor Mounting Bolts	45 N•m (33 ft. lbs.)
Starter Solenoid Battery Cable Nut	10 N•m (90 in. lbs.)
Starter Solenoid B+ Nut	6 N•m (55 in. lbs.)

J928B-23

TORQUE—4.0L

COMPONENTS	TORQUE
Starter Motor Mounting Bolts	Upper 55 N•m (40 ft. lbs.) Lower 41 N•m (30 ft. lbs.)
Starter Solenoid Battery Cable Nut	10 N•m (90 in. lbs.)
Starter Solenoid B+ Nut	6 N•m (55 in. lbs.)

J938B-22

GENERATOR SPECIFICATIONS

TORQUE

COMPONENT	TORQUE
Generator Mounting Bolts	55 N·m (41 ft. lbs.)
Power Steering Pump (or Idler Pulley) Mounting Bolts	27 N·m (20 ft. lbs.)

J948B-18

OVERHEAD CONSOLE

CONTENTS

	page		page
DIAGNOSIS	2	SERVICE PROCEDURES	5
GENERAL INFORMATION	1		

GENERAL INFORMATION

An overhead console featuring an electronic compass and thermometer is an available option for XJ (Cherokee) models. Following are general descriptions of major components used in the overhead console. Refer to Group 8W - Wiring Diagrams for complete circuit descriptions and diagrams.

COMPASS

The compass will display the direction in which the vehicle is pointed using the eight major compass headings (Examples: north is N, northeast is NE). It does not display the headings in actual degrees. The display is turned on or off using the COMP/TEMP button to the left of the display.

The self-calibrating compass unit requires no adjusting in normal use. The only calibration that may prove necessary is to drive the vehicle in 3 complete circles, on level ground, in not less than 48 seconds. This will reorient the unit to its vehicle.

The unit also will compensate for magnetism the body of the vehicle may acquire during normal use. However, avoid placing anything magnetic directly on the roof of the vehicle. Magnetic mounts for an antenna, a repair order hat or a funeral procession flag can exceed the compensating ability of the compass unit if placed on the roof panel. Magnetic bit drivers used on the fasteners that hold the assembly to the roof header can also affect compass operation.

If the vehicle roof should become magnetized, the demagnetizing and calibration procedures may be required to restore proper operation.

THERMOMETER

The thermometer displays the outside ambient temperature. The temperature displayed can be changed from Fahrenheit to Celsius using the US/METRIC button. The displayed temperature is not an instant reading of conditions, but an average temperature. It may take the unit several minutes to react to a major temperature change such as driving out of a heated garage into winter temperatures.

When the ignition switch is turned OFF, the last displayed temperature reading stays in memory. When the ignition switch is turned ON again, the thermometer will display the memory temperature for one minute; then update the display to the current average temperature reading within five minutes.

READING AND COURTESY LAMPS

All reading and courtesy lamps in the overhead console are activated by the door jamb switches. When all doors and the liftgate are closed, the lamps can be individually activated by depressing the corresponding lens. When a door and/or the liftgate is open, depressing the lamp lens switches will not turn the lamps off. Refer to Group 8L - Lamps, for diagnosis and service of these lamps.

KEYLESS ENTRY RECEIVER

The overhead console houses the keyless entry receiver. Refer to Group 8P - Power Locks, for diagnosis and service of this component.

REMOTE GARAGE DOOR OPENER STORAGE

A compartment in the overhead console is designed to hold most remote garage door opener transmitters. The transmitter is mounted within the compartment with an adhesive-backed hook and loop fastener patch. Then one to three pegs are selected and mounted on a post on the inside of the storage compartment door. The pegs may be stacked, if necessary. The peg(s) selected must be long enough to activate the button of the transmitter each time the storage compartment door is depressed.

SUNGLASSES STORAGE

A flocked storage compartment for sunglasses is included in the overhead console. This compartment features a push/push-type latch and a viscous dampening system for a fluid opening motion.

DIAGNOSIS

COMPASS/DISPLAY SELF-DIAGNOSTIC TEST

This self-diagnostic test is used to determine that the compass and all of its display segments are operating properly electrically. Initiate the self-diagnostic test as follows:

(1) With the ignition switch in the OFF position, simultaneously press and hold the COMP/TEMP button and the US/METRIC button.

(2) Turn ignition switch to the ON position.

(3) Continue to hold both buttons until the display performs a walking segment test. In this test all of the compass points are displayed, along with various number combinations. These combinations verify that all display segments are functional. If any segment should fail to light during the test, the unit is faulty and requires replacement. To repeat the test, momentarily depress and release the COMP/TEMP button one time.

(4) Momentarily depress and release the US/METRIC button one time and all segments will light simultaneously for about 2 seconds. If any segment should fail to light during the test, the unit is faulty and requires replacement. To repeat the test, momentarily depress and release the COMP/TEMP button one time.

(5) Momentarily depress and release the US/METRIC button one time or turn the ignition switch to OFF to exit the self-diagnostic mode and return to normal operation.

If the compass functions, but accuracy is suspect, it may be necessary to perform a variation adjustment. This procedure allows the unit to accommodate variations in the earth's magnetic field strength based on geographic location. See Compass Variation Adjustment, in this group.

If the compass display has blanked out and only CAL appears, demagnetizing may be necessary to remove excessive residual magnetic fields from the vehicle. See Compass Demagnetizing, in this group.

THERMOMETER DIAGNOSIS

The thermometer function is supported by a temperature sensor, a wiring circuit and a portion of the overhead console display. The sensor is mounted at the center of the vehicle below the grille, behind the front bumper (Fig. 1).

If any portion of the circuit fails, it will self-diagnose as an open or short circuit. The system will display SC (short circuit) when the sensor is exposed to temperatures in excess of 55°C (131°F) or if the circuit is shorted. If the temperature is below -40°C (-40°F) or an open circuit exists, the system will display OC (open circuit).

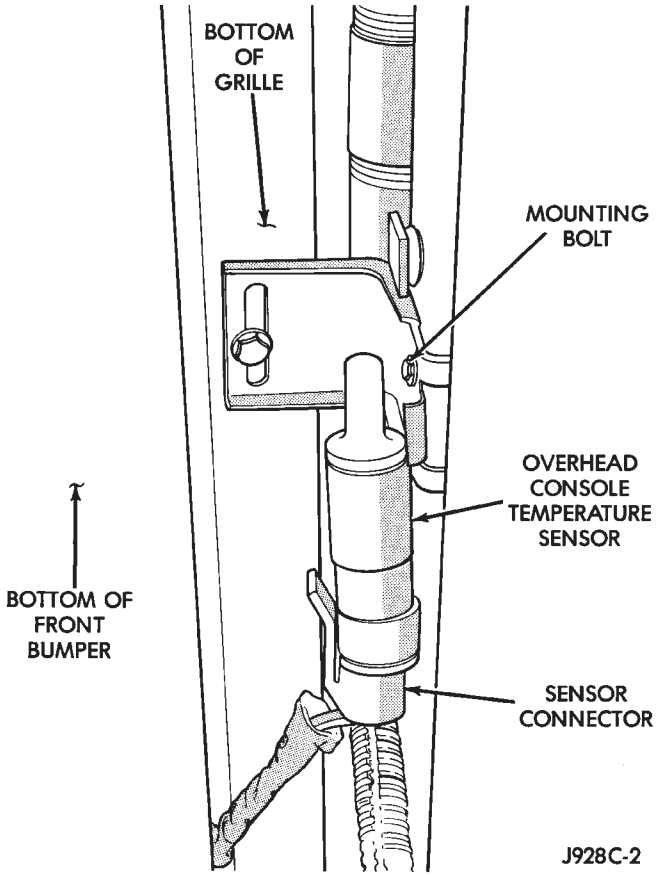

Fig. 1 Temperature Sensor

To diagnose the temperature sensor, perform the following procedures. If the sensor and circuit are OK, then the electronic module is faulty and should be replaced.

SENSOR TEST

(1) Turn the ignition switch to OFF. Unplug sensor connector.

(2) Measure resistance of sensor. At -40°F the resistance is 336K ohms. At 140°F the resistance is 2.488K ohms. Sensor resistance should read between these two values. If OK, go to Sensor Circuit Test. If not OK, replace the sensor.

SENSOR CIRCUIT TEST

(1) Turn ignition switch to OFF. Unplug sensor connector.

(2) Short the pins on the body half of connector using a jumper wire.

(3) Remove the overhead console as described in Service Procedures.

(4) Check continuity between cavities 10 and 11 of overhead console harness connector (Fig. 2). There should be continuity. If OK, go to next step. If not OK, repair open circuit as required.

(5) Remove jumper wire from temperature sensor harness connector. Check continuity between cavities 10 and 11 of overhead console harness connector and a good ground (Fig. 2). There should be no continuity. If OK, replace electronic module. If not OK, repair short circuit as required.

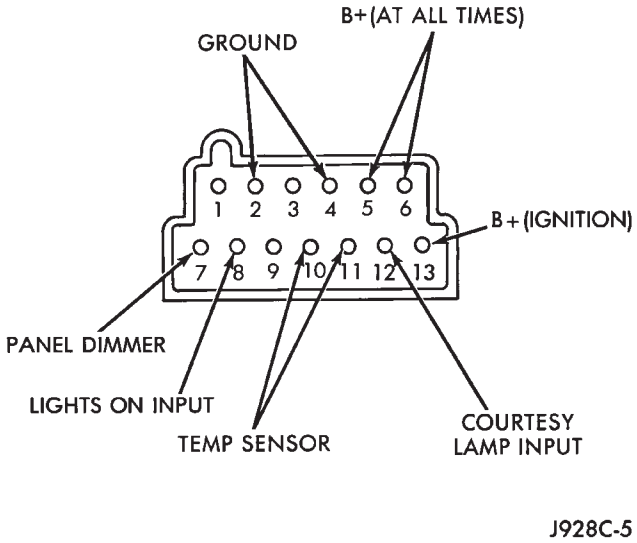

Fig. 2 Overhead Console Harness Connector

COMPASS/THERMOMETER DIAGNOSIS

CONDITION	POSSIBLE CAUSES	CORRECTION
OVERHEAD CONSOLE DISPLAY COMPLETELY DARK	1. Display has been switched off. 2. Faulty fuse or headlamp delay module. 3. Faulty wiring. 4. Faulty compass/thermometer display module.	1. Depress COMP/TEMP button to switch unit to compass or thermometer display option. 2. Refer to Group 8L — Lamps, for diagnosis and service of this circuit. 3. Refer to Group 8W — Wiring Diagrams, for circuit diagrams. Check and repair wiring, if required. 4. Replace compass/thermometer display module, if required.
OVERHEAD CONSOLE DISPLAY SEGMENTS MISSING	1. Faulty compass/thermometer display module.	1. See Self-Diagnostic Test, in this group. Replace compass/thermometer display module, if required.
ERRATIC COMPASS OPERATION	1. Magnet or strong magnetic field near compass module. 2. Variance setting incorrect. 3. Calibration incorrect. 4. Faulty compass/thermometer display module.	1. Remove magnet and perform Demagnetizing Procedure, in this group. 2. See Variation Adjustment Procedure in this group. 3. See Calibration Procedure, in this group. 4. Replace compass/thermometer display module, if required.
ERRATIC THERMOMETER OPERATION	1. Faulty sensor wiring. 2. Faulty sensor. 3. Faulty compass/thermometer display module.	1. See Sensor Circuit Test, in this group. Repair wiring, if required. 2. See Sensor Test, in this group. Replace sensor, if required. 3. Replace compass/thermometer display module, if required.

J958C-1

SERVICE PROCEDURES

COMPASS VARIATION ADJUSTMENT

Variance is the difference between magnetic north and geographic north. In some areas, the difference between magnetic and geographic north is great enough to cause the compass to give false readings. If this occurs, the variance must be set.

To set the variance:

(1) Using the map in Fig. 3, find your geographic location and note the zone number.

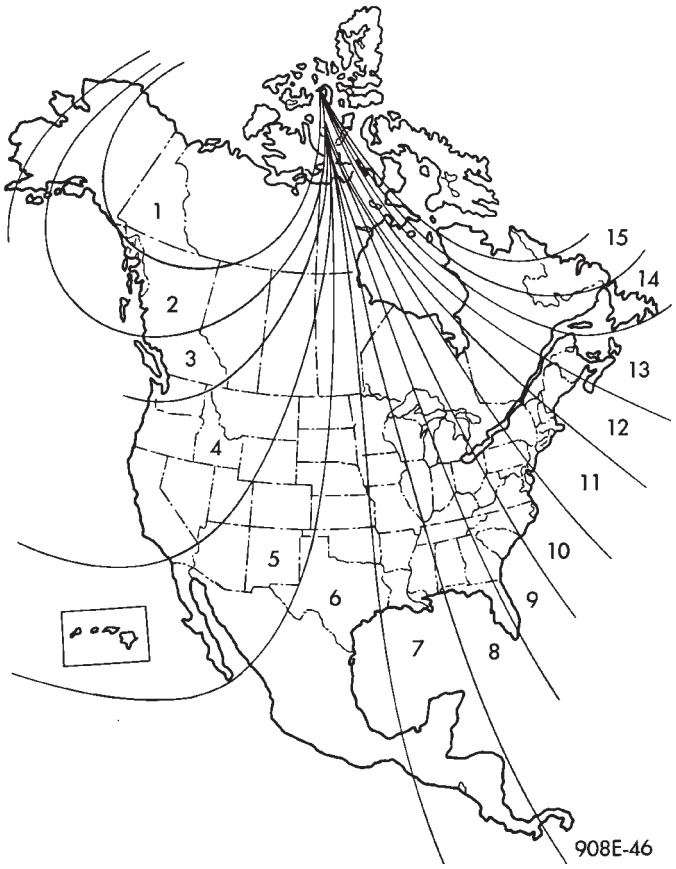

Fig. 3 Variance Settings

(2) Turn ignition switch to the ON position.

(3) Depress both the US/METRIC and COMP/TEMP buttons. Hold down until VAR is displayed. This takes about 5 seconds.

(4) Release both buttons.

(5) Press the US/METRIC button to step through the numbers until the zone number for your area appears in the display.

(6) Press the COMP/TEMP button to enter this zone number into compass unit memory.

(7) Confirm correct directions are indicated.

COMPASS CALIBRATION

CAUTION: DO NOT place any external magnets such as magnetic roof mount antennas, in the vicinity of the compass. DO NOT use magnetic tools when servicing the overhead console.

The compass features a self-calibrating design, which simplifies the calibration procedure. This feature automatically updates the compass calibration while the vehicle is being driven. This takes into account small changes in residual magnetism the vehicle may acquire during normal use. Do not attempt to calibrate the compass near large metal objects such as other vehicles, large buildings or bridges.

Whenever the compass is calibrated manually, the variation number must also be reset. See Variation Adjustment Procedure, in this group.

Calibrate the compass manually as follows:

(1) Start the engine.

(2) Depress both the US/METRIC and COMP/TEMP buttons. Hold down until CAL is displayed. This takes about 10 seconds and appears about 5 seconds after VAR is displayed.

(3) Release both buttons.

(4) Drive vehicle on a level surface that is away from large metal objects through 3 or more complete circles in not less than 48 seconds. The CAL message will disappear to indicate that the compass is now calibrated.

If CAL message remains in display, either there is excessive magnetism near the compass or the unit is faulty. Repeat the demagnetizing and calibration procedures at least one more time.

If the wrong direction is still indicated, the area selected may be too close to a strong magnetic field. Repeat the calibration procedure in another location.

COMPASS DEMAGNETIZING

The tool used to degauss or demagnetize the forward console attaching screw and roof panel is the Miller Tool 6029. Equivalent units must be rated as continuous duty for 110/115 volts and 60Hz. They must also have a field strength of over 350 gauss at 1/4-inch beyond the tip of the probe.

The degaussing tool is used to demagnetize both the roof panel and the console forward mounting screw, as follows:

(1) Be sure the ignition switch is in the OFF position before you begin the demagnetizing procedure.

(2) Plug in the degaussing tool, while keeping the tool at least 2 feet away from the compass unit.

(3) Slowly approach the head of the forward mounting screw with the plastic coated tip of the degaussing tool. Contact the head of the screw for about 2 seconds.

(4) With the degaussing tool still energized, slowly back it away from the screw until the tool is at least 2 feet from the screw head, then unplug the tool.

(5) Place an 8-1/2 X 11 inch piece of paper, oriented lengthwise from front to rear, on the center line of the roof at the windshield header (Fig. 4). The purpose of the paper is to protect the roof panel from scratches and define the area to be demagnetized.

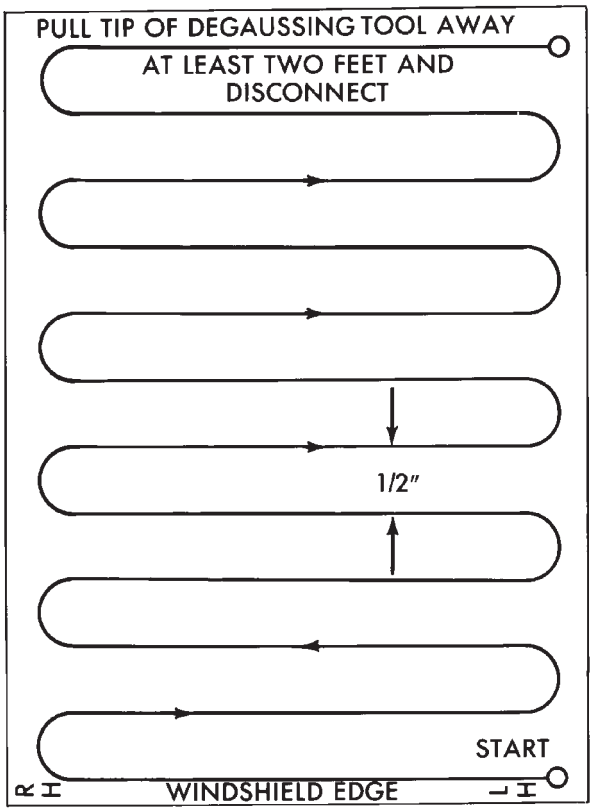

Fig. 4 Roof Demagnetizing Pattern

(6) Plug in the degaussing tool, while keeping the tool at least 2 feet away from the compass unit.

(7) Slowly approach the center line of the roof panel at the windshield header with the degaussing tool plugged in.

(8) Contact the roof panel with the tip of the tool. Be sure template is in place to avoid scratching the roof panel. Using a slow, back and forth sweeping motion and allowing 1/2-inch between passes (Fig. 4), move the tool at least 4 inches either side of the roof center line and 11 inches back from the windshield header.

(9) With the degaussing tool still energized, slowly back it away from the roof panel until the tip is at least 2 feet from the roof. Then unplug the tool.

(10) Calibrate the compass and adjust variance as described in this group.

OVERHEAD CONSOLE REMOVE/INSTALL

(1) Remove screw forward of the compass unit (Fig. 5).

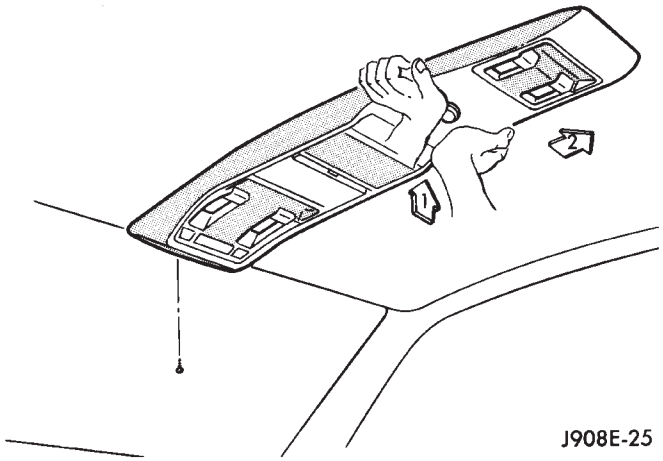

Fig. 5 Remove/Install Overhead Console

(2) Flex housing outward while pressing upward to disengage the housing from the rear bracket (Arrow 1 in Fig. 5).

(3) Slide console rearward until the console detaches from the front mounting bracket (Arrow 2 in Fig. 5).

(4) While pressing up on rear of console (Arrow 1 in Fig. 5), slide console forward, holding front away from headliner (Arrow 2 in Fig. 5). Move console forward until the rear detaches from headliner and becomes free (Fig. 6).

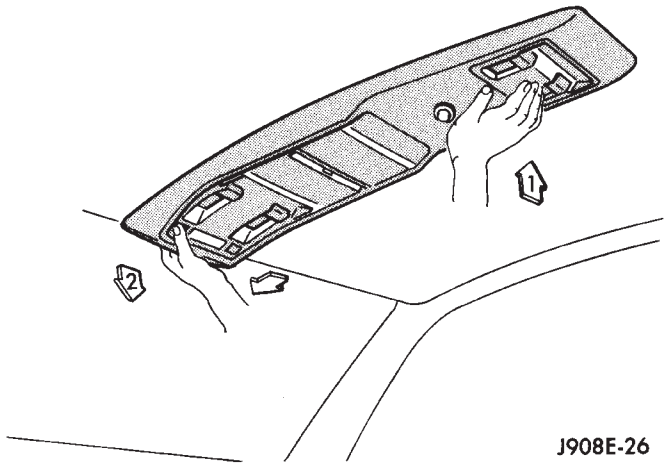

Fig. 6 Remove/Install Overhead Console

(5) Disconnect wire harnesses from keyless entry and compass/thermometer modules (Figs. 7 and 8).

(6) Reverse removal procedures to install. Be sure to flex housing outward near the keyless entry receiver until the console snaps onto the rear mounting bracket.

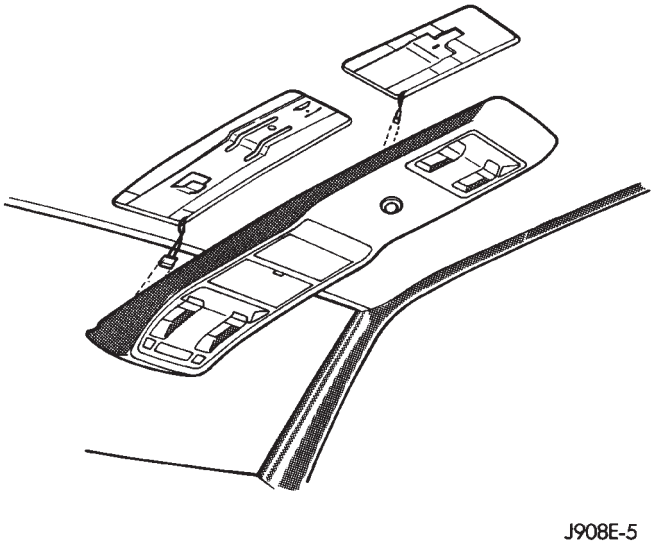

Fig. 7 Disconnect Wire Harnesses

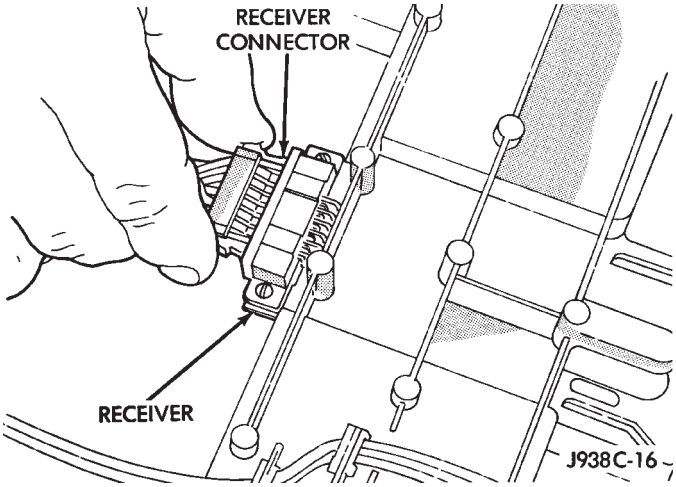

Fig. 8 Keyless Entry Connector

SUNGLASSES STORAGE BIN REMOVE/INSTALL

(1) Open sunglasses storage bin door.

(2) Remove cover plate (Fig. 9).

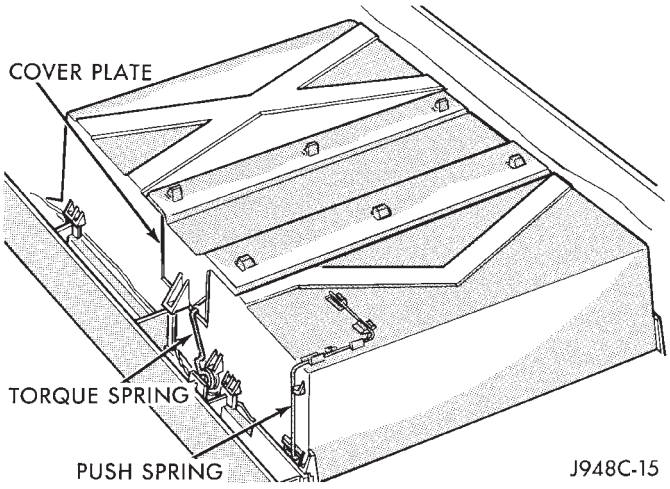

Fig. 9 Remove Sunglasses Storage Bin Cover Plate

(3) Unhook torque spring from wall and put in down position as shown by arrow in Fig. 10.

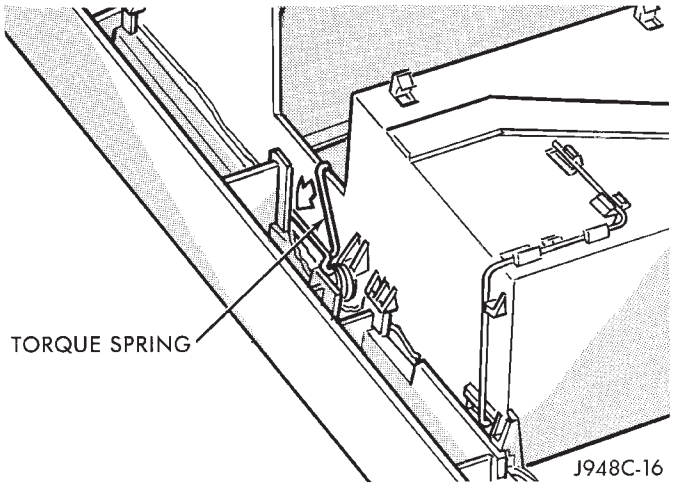

Fig. 10 Release Torque Spring

(4) Remove sunglasses storage bin door by flexing the center panel. Then remove the side of the door with the gear first (Fig. 11). The gear side of the door has a short pivot rod. Slide door out of the compartment.

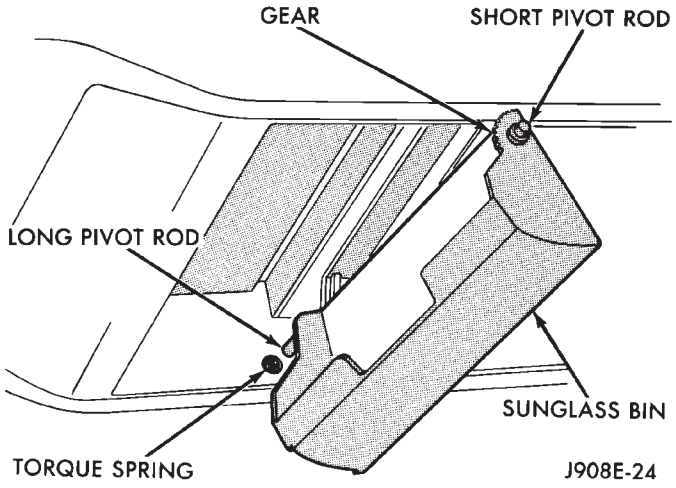

Fig. 11 Remove Sunglasses Storage Bin

(5) Remove and discard latch spring (Fig. 9).

(6) Install new latch spring as shown. This may require flexing the housing in that area for clearance.

(7) Install new sunglasses storage bin door in the open position as follows:

(a) Make sure the torque spring lines up with the slot in the longer pivot rod, then insert the longer pivot rod (Fig. 11).

(b) Flex the center panel and snap in the short pivot rod.

(c) Hook torque spring back over the wall (Fig. 10).

(d) Cycle door several times to ensure that the door functions properly.

(8) Snap cover plate back in position as shown in Fig. 9. Some pressure from the inside of the bin may be required to engage all 6 snaps.

READING/COURTESY LAMP BULB REMOVE/ INSTALL

(1) Make a hook in the end of a large paper clip or wire (approximately 0.06 in. diam.). Insert into the hole in the lens and pull downward (Fig. 12).

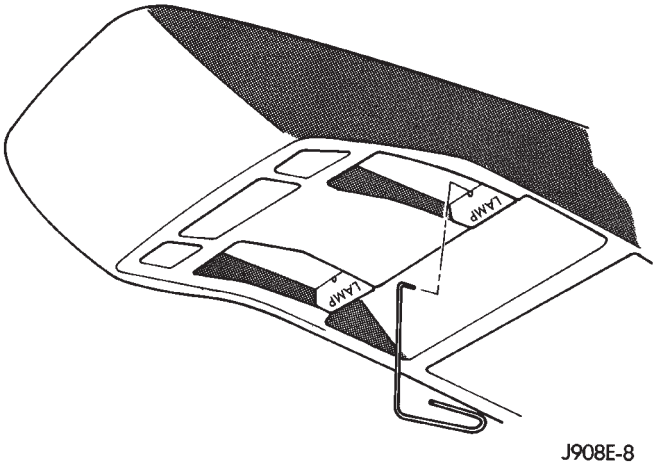

Fig. 12 Remove Reading/Courtesy Lamp Lens

(2) Set lens aside and replace bulb.

(3) Replace lens by inserting tab on thin portion of lens into mating slot on console and push upwards on opposite end of lens (Fig. 13).

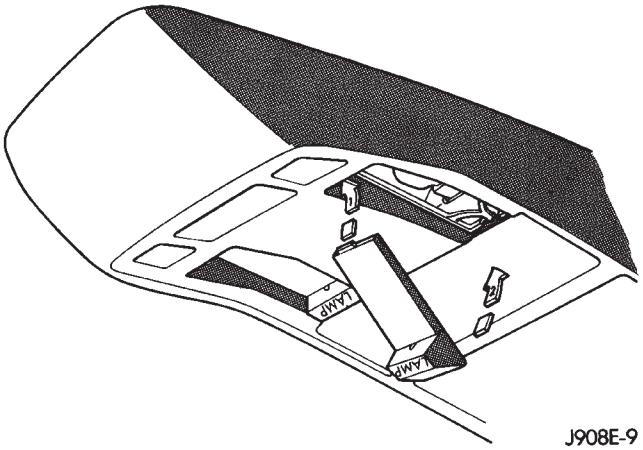

Fig. 13 Install Reading/Courtesy Lamp Lens

IGNITION SYSTEMS

CONTENTS

page

COMPONENT IDENTIFICATION/SYSTEM OPERATION 1
COMPONENT REMOVAL/INSTALLATION 17
DIAGNOSTICS/SERVICE PROCEDURES 6
IGNITION SWITCH—XJ MODELS 26
IGNITION SWITCH—YJ MODELS 29
SPECIFICATIONS 32

COMPONENT IDENTIFICATION/SYSTEM OPERATION

INDEX

page

Automatic Shutdown (ASD) Relay 1
Camshaft Position Sensor 2
Crankshaft Position Sensor 3
Distributors 4
Engine Coolant Temperature Sensor 5
General Information 1
Ignition Coil 4
Intake Manifold Air Temperature Sensor 5
Manifold Absolute Pressure (MAP) Sensor 5
Oxygen (O2S) Sensor 5
Powertrain Control Module (PCM) 5
Throttle Position Sensor 5

GENERAL INFORMATION

Throughout this group, references are made to particular vehicle models by alphabetical designation (XJ or YJ) or by the particular vehicle nameplate. A chart showing a breakdown of alphabetical designations is included in the Introduction group at the beginning of this manual.

This section of the group, Component Identification/System Operation, will discuss ignition system operation and will identify ignition system components.

For diagnostic procedures and adjustments, refer to the Diagnostics/Service Procedures section of this group.

For removal and installation of ignition system components, refer to the Component Removal/Installation section of this group.

For other useful information, refer to On-Board Diagnostics in the General Diagnosis sections of Group 14, Fuel System in this manual.

For operation of the DRB Scan Tool, refer to the appropriate Powertrain Diagnostic Procedures service manual.

An Ignition specifications section is included at the end of this group. A general Maintenance Schedule (mileage intervals) for ignition related items can be found in Group 0, Lubrication and Maintenance. This schedule can also be found in the Owners Manual.

IGNITION SYSTEMS

A multi-port, fuel injected engine is used on all models. The ignition system is controlled by the powertrain control module (PCM) on all engines. The PCM was formerly referred to as the SBEC or engine controller.

The ignition system consists of:

- Spark plugs
- Ignition coil
- Secondary ignition cables
- Distributor (contains rotor and camshaft position sensor)
- Powertrain control module (PCM)
- Crankshaft position sensor

AUTOMATIC SHUTDOWN (ASD) RELAY

The automatic shutdown (ASD) relay is located in the power distribution center (PDC) near the battery (Fig. 1 or 2). As one of its functions, it will supply battery voltage to the ignition coil.

The ground circuit for the ASD relay is controlled by the powertrain control module (PCM). This is done through pin/cavity number 51 of the PCM 60-way connector. The PCM then regulates ASD relay operation by switching this ground circuit on-and-off.

Also refer to Ignition Coil for additional information.

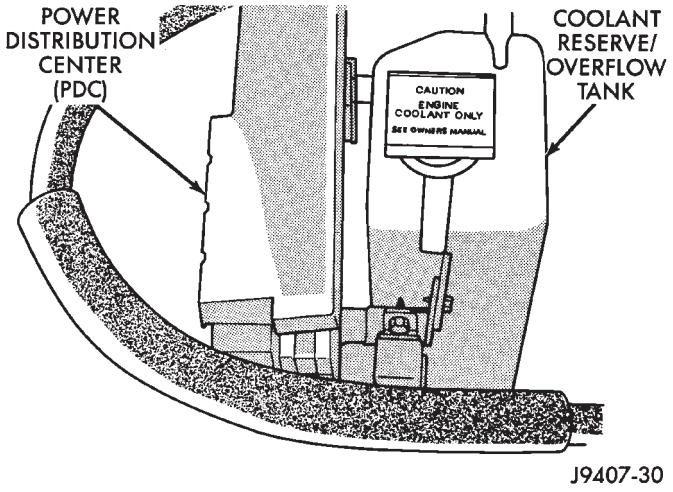

Fig. 1 PDC—XJ Models

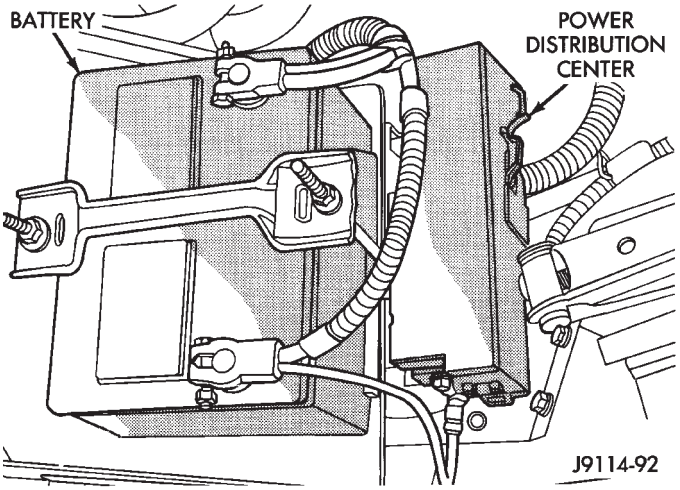

Fig. 2 PDC—YJ Models

CAMSHAFT POSITION SENSOR

The camshaft position sensor is located in the distributor (Figs. 3 or 4) on all engines.

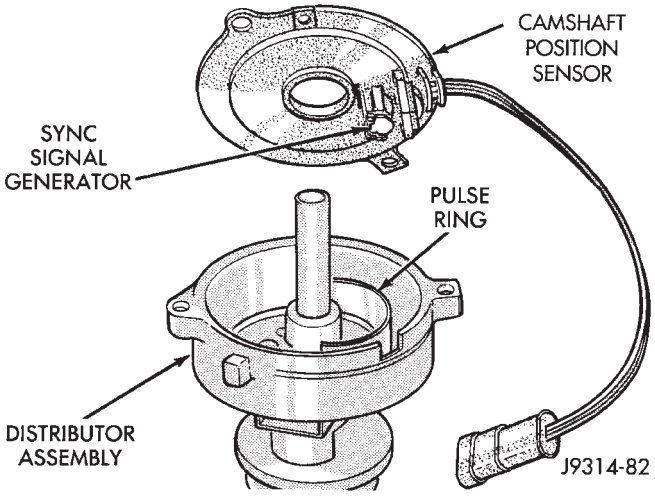

Fig. 3 Camshaft Position Sensor—Typical

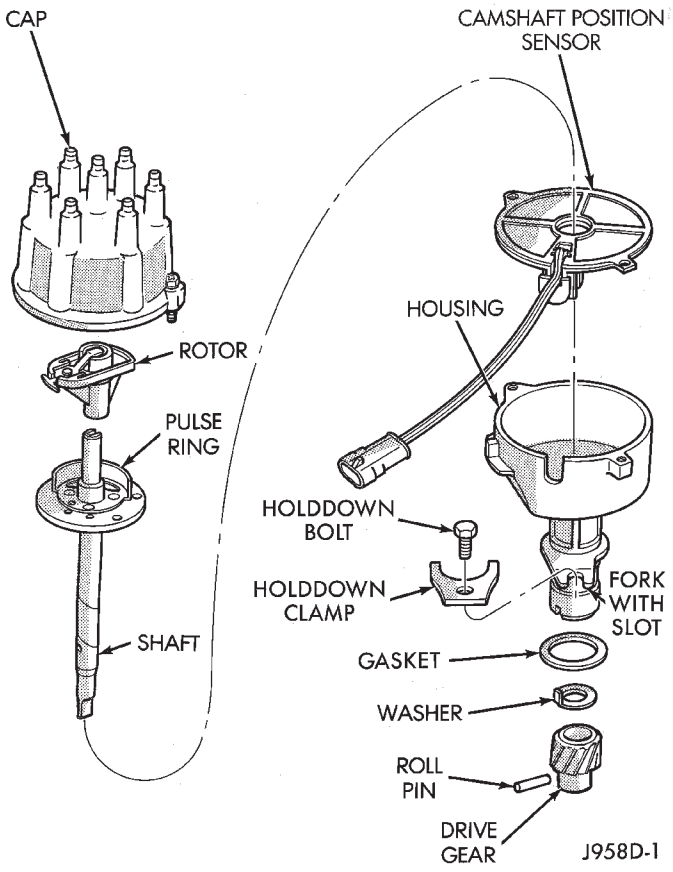

Fig. 4 Distributor Assembly—Typical

The camshaft position sensor contains a hall effect device called a sync signal generator to generate a fuel sync signal. This sync signal generator detects a rotating pulse ring (shutter) on the distributor shaft (Fig. 4). The pulse ring rotates 180 degrees through the sync signal generator. Its signal is used in conjunction with the crankshaft position sensor to differentiate between fuel injection and spark events. It is also used to synchronize the fuel injectors with their respective cylinders.

When the leading edge of the pulse ring (shutter) enters the sync signal generator, the following occurs: The interruption of magnetic field causes the voltage to switch high resulting in a sync signal of approximately 5 volts.

When the trailing edge of the pulse ring (shutter) leaves the sync signal generator, the following occurs: The change of the magnetic field causes the sync signal voltage to switch low to 0 volts.

For component testing, refer to the Diagnostics/Service Procedures section of this group.

For removal and installation of this component, refer to the Component Removal/Installation section of this group.

CRANKSHAFT POSITION SENSOR

The crankshaft position sensor is mounted to the transmission bellhousing at the left/rear side of the engine block (Figs. 5, 6 or 7).

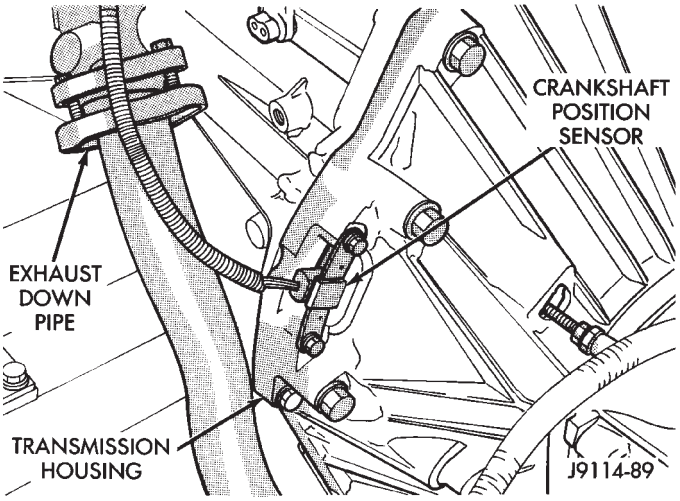

Fig. 5 Crankshaft Position Sensor—2.5L 4-Cyl. Engine—Typical

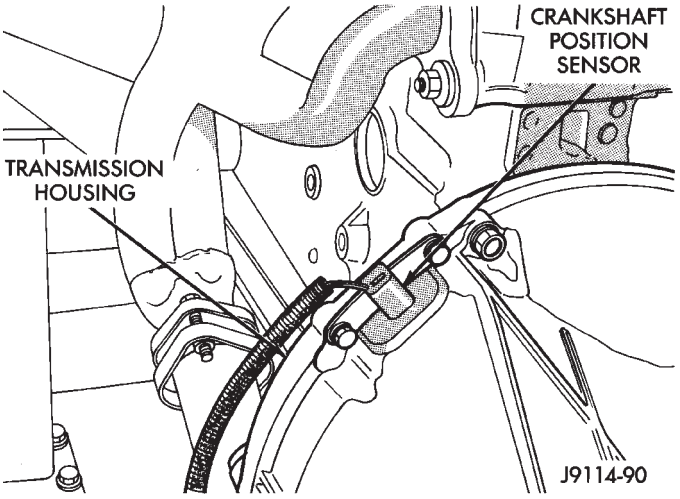

Fig. 6 Crankshaft Position Sensor—4.0L 6-Cyl. Engine—All Except YJ models With Automatic Transmission

Engine speed and crankshaft position are provided through the crankshaft position sensor. The sensor generates pulses that are the input sent to the powertrain control module (PCM). The PCM interprets the sensor input to determine the crankshaft position. The PCM then uses this position, along with other inputs, to determine injector sequence and ignition timing.

The sensor is a hall effect device combined with an internal magnet. It is also sensitive to steel within a certain distance from it.

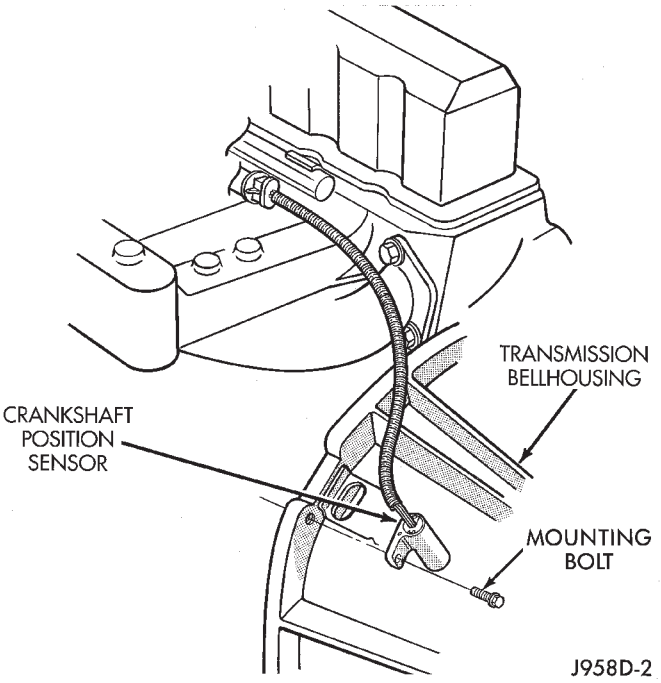

Fig. 7 Crankshaft Position Sensor—4.0L 6-Cyl. Engine—YJ models With Automatic Transmission

SENSOR OPERATION

The flywheel/drive plate has groups of four notches at its outer edge. On 4.0L 6-cylinder engines there are three sets of notches (Figs. 9 or 10). On 2.5L 4-cylinder engines there are two sets of notches (Fig. 8).

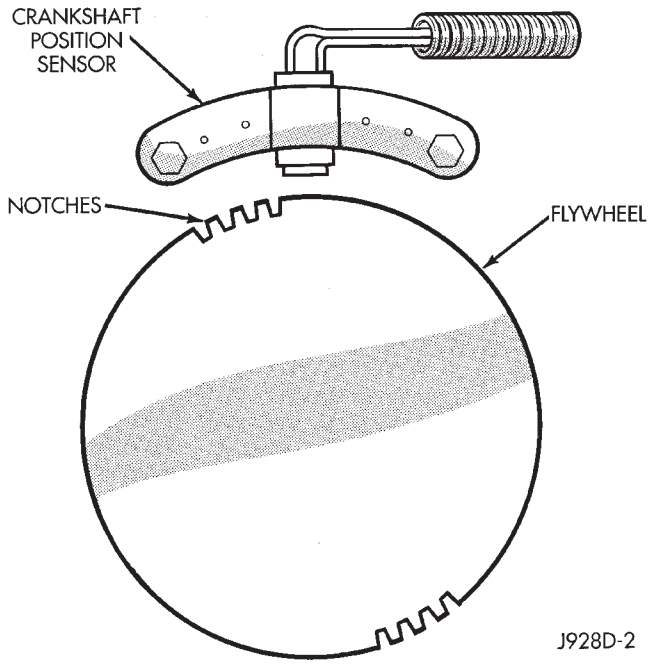

Fig. 8 Sensor Operation—2.5L 4-Cyl. Engine

The notches cause a pulse to be generated when they pass under the sensor. The pulses are the input to the PCM. For each engine revolution there are two

groups of four pulses generated on 2.5L 4-cylinder engines. There are 3 groups of four pulses generated on 4.0L 6-cylinder engines.

The trailing edge of the fourth notch, which causes the pulse, is four degrees before top dead center (TDC) of the corresponding piston.

The engine will not operate if the PCM does not receive a crankshaft position sensor input.

For component testing, refer to the Diagnostics/Service Procedures section of this group.

For removal and installation of this sensor, refer to the Component Removal/Installation section of this group.

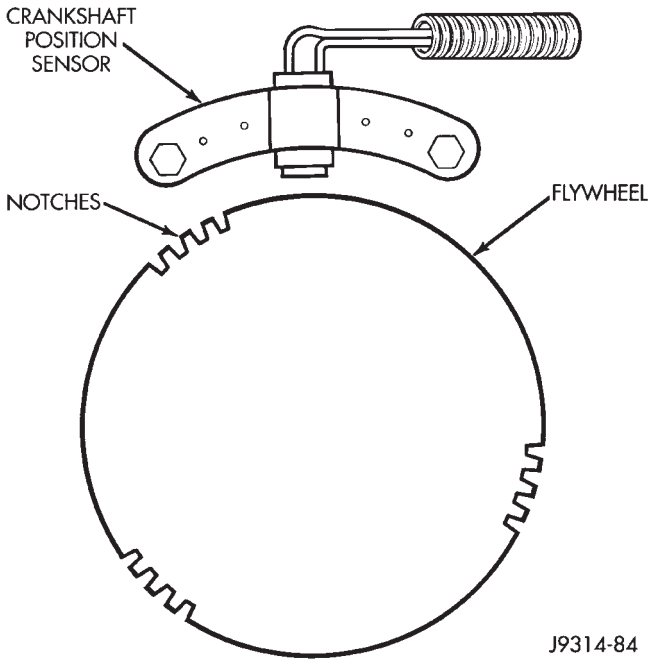

Fig. 9 Sensor Operation—4.0L 6-Cyl. Engine—All Except YJ Models With Automatic Transmission

DISTRIBUTORS

All engines are equipped with a camshaft driven mechanical distributor containing a shaft driven distributor rotor. All distributors are equipped with an internal camshaft position (fuel sync) sensor. This sensor provides fuel injection synchronization and cylinder identification.

The distributors on both the 2.5L 4-cylinder and the 4.0L-6 cylinder engines do not have built in centrifugal or vacuum assisted advance. Base ignition timing and all timing advance is controlled by the powertrain control module (PCM). Because ignition timing is controlled by the PCM, **base ignition timing is not adjustable on any of these engines.**

The distributor is locked in place by a fork with a slot located on the distributor housing base. The distributor holddown clamp bolt passes through this slot when installed. Because the distributor position is locked when installed, its rotational position can not be changed. **Do not attempt to modify the distributor housing to get distributor rotation. Distributor position will have no effect on ignition timing. The position of the distributor will determine fuel synchronization only.**

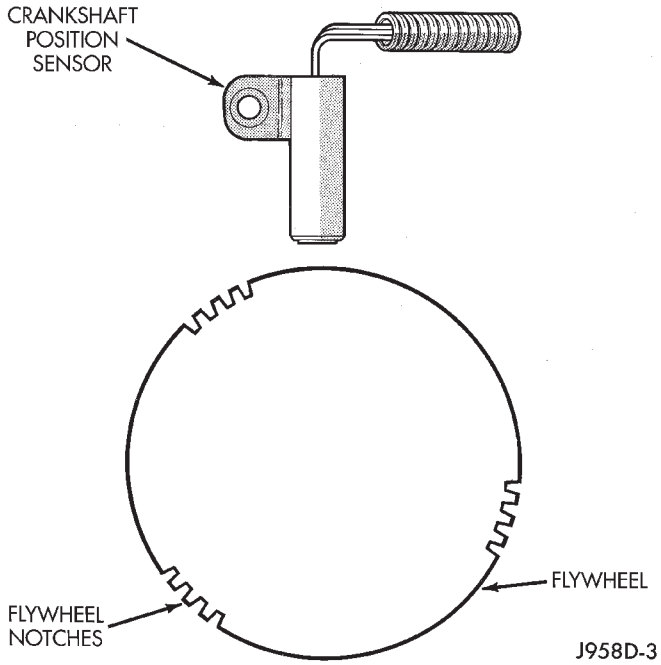

Fig. 10 Sensor Operation—4.0L 6-Cyl. Engine—YJ Models With Automatic Transmission

All distributors contain an internal oil seal that prevents oil from entering the distributor housing. The seal is not serviceable.

Distributor removal and installation procedures have changed for the 1995 model year. Refer to Distributor in the Component Removal/Installation section of this group.

IGNITION COIL

Battery voltage is supplied to the ignition coil positive terminal from the ASD relay.

The powertrain control module (PCM) opens and closes the ignition coil ground circuit for ignition coil operation. This is done through pin/cavity number 19 of the PCM 60-way connector.

Base ignition timing is not adjustable. By controlling the coil ground circuit, the PCM is able to set the base timing and adjust the ignition timing advance. This is done to meet changing engine operating conditions.

The ignition coil is not oil filled. The windings are embedded in an epoxy compound. This provides heat and vibration resistance that allows the ignition coil to be mounted on the engine.

On the 2.5L 4-cylinder engine, the ignition coil is mounted to a bracket on the side of the engine (to the rear of the distributor).

On the 4.0L 6-cylinder engine, the ignition coil is mounted to a bracket on the side of the engine (to the front of the distributor) (Fig. 11).

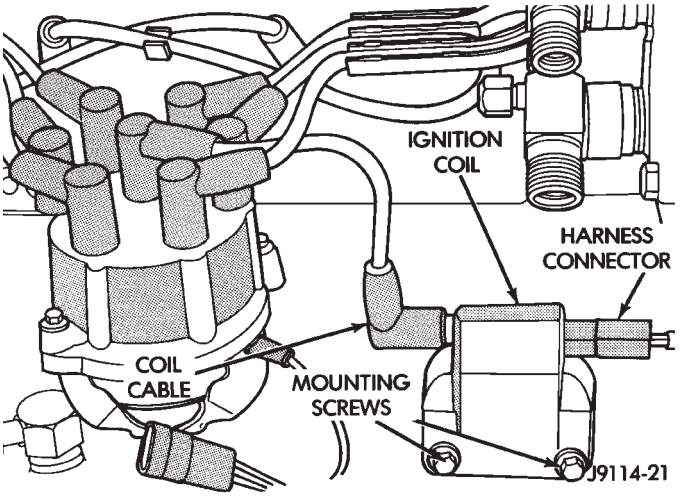

Fig. 11 Ignition Coil—Typical

For component testing, refer to the Diagnostics/Service Procedures section of this group.

For removal and installation of this component, refer to the Component Removal/Installation section of this group.

ENGINE COOLANT TEMPERATURE SENSOR

For an operational description, diagnosis and removal/installation procedures, refer to Group 14, Fuel System.

INTAKE MANIFOLD AIR TEMPERATURE SENSOR

For an operational description, diagnosis or removal/ installation procedures, refer to Group 14, Fuel Systems.

MANIFOLD ABSOLUTE PRESSURE (MAP) SENSOR

For an operational description, diagnosis and removal/installation procedures, refer to Group 14, Fuel System.

POWERTRAIN CONTROL MODULE (PCM)

The PCM was formerly referred to as the SBEC or engine controller. On XJ models, the PCM is located in the engine compartment next to the air cleaner (Fig. 12). On YJ models, the PCM is located in the engine compartment behind the windshield washer fluid reservoir (Fig. 13).

The ignition system is controlled by the PCM.

Base ignition timing by rotation of distributor is not adjustable. The PCM opens and closes the ignition coil ground circuit to operate the ignition coil. This is done to adjust ignition timing, both initial (base) and advance, for changing engine operating conditions.

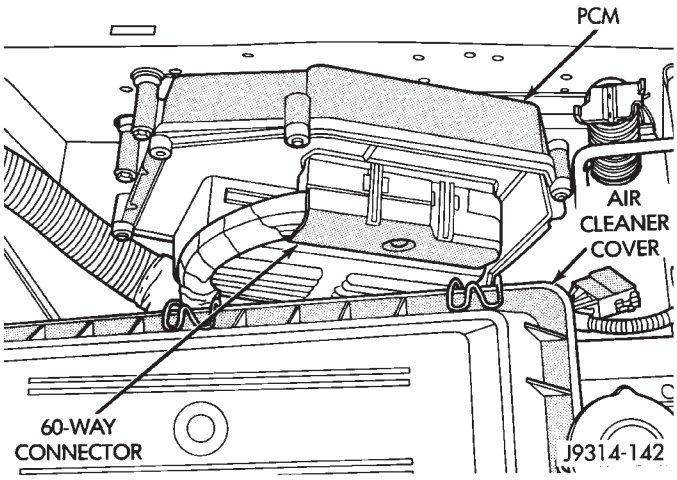

Fig. 12 PCM Location—XJ Models

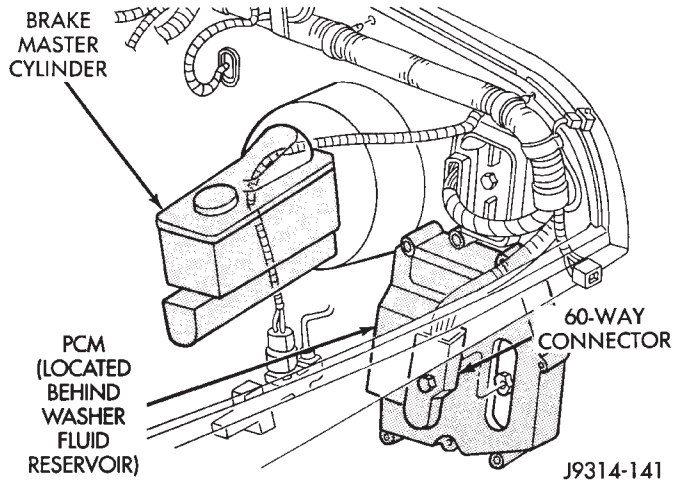

Fig. 13 PCM Location—YJ Models

The amount of electronic spark advance provided by the PCM is determined by five input factors: Engine coolant temperature, engine rpm, intake manifold air temperature, intake manifold absolute pressure and throttle position.

For removal and installation of this component, refer to the Component Removal/Installation section of this group.

For PCM diagnostics, refer to the appropriate Powertrain Diagnostic Procedures service manual for operation of the DRB scan tool.

THROTTLE POSITION SENSOR

For an operational description, diagnosis and removal/installation procedures, refer to Group 14, Fuel System.

OXYGEN (O2S) SENSOR

For an operational description, diagnosis and removal/installation procedures, refer to Group 14, Fuel System.

DIAGNOSTICS/SERVICE PROCEDURES

INDEX

	page
Automatic Shutdown (ASD) Relay Test	6
Camshaft Position Sensor Test	6
Crankshaft Position Sensor Test	7
Distributor Cap	7
Distributor Rotor	8
DRB Scan Tool	8
Engine Coolant Temperature Sensor Test	9
General Information	6
Ignition Coil	9
Ignition Secondary Circuit Diagnosis	10
Ignition Timing	11
Intake Manifold Air Temperature Sensor Test	11
Manifold Absolute Pressure (MAP) Sensor Test	11
On-Board Diagnostics	15
Oxygen (O2S) Sensor Tests	15
Powertrain Control Module (PCM)	11
Spark Plug Secondary Cables	14
Spark Plugs	12
Throttle Position Sensor Test	15

GENERAL INFORMATION

This section of the group, Diagnostics/Service Procedures, will discuss basic ignition system diagnostics and service adjustments.

For system operation and component identification, refer to the Component Identification/System Operation section of this group.

For removal or installation of ignition system components, refer to the Component Removal/Installation section of this group.

For other useful information, refer to the On-Board Diagnostics section.

For operation of the DRB Scan Tool, refer to the appropriate Powertrain Diagnostic Procedures service manual.

AUTOMATIC SHUTDOWN (ASD) RELAY TEST

To perform a complete test of this relay and its circuitry, refer to the DRB scan tool. Also refer to the appropriate Powertrain Diagnostics Procedures manual. To test the relay only, refer to Relays—Operation/Testing in the Group 14, Fuel Systems section.

CAMSHAFT POSITION SENSOR TEST

To perform a complete test of this sensor and its circuitry, refer to the DRB scan tool. Also refer to the appropriate Powertrain Diagnostics Procedures manual. To test the sensor only, refer to the following:

The camshaft position sensor is located in the distributor (Fig. 1).

To perform a complete test of this sensor and its circuitry, refer to the DRB scan tool. Also refer to the appropriate Powertrain Diagnostics Procedures manual. To test the sensor only, refer to the following:

For this test, an analog (non-digital) voltmeter is needed. Do not remove the distributor connector from the distributor. Using small paper clips, insert them into the backside of the distributor wire harness connector to make contact with the terminals. Be sure that the connector is not damaged when inserting the paper clips. Attach voltmeter leads to these paper clips.

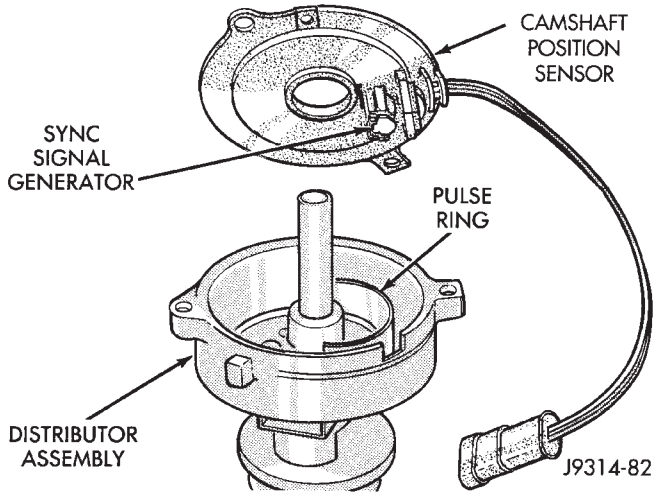

Fig. 1 Camshaft Position Sensor—Typical

(1) Connect the positive (+) voltmeter lead into the sensor output wire. This is at done the distributor wire harness connector. For wire identification, refer to Group 8W, Wiring Diagrams.

(2) Connect the negative (-) voltmeter lead into the ground wire. For wire identification, refer to Group 8W, Wiring Diagrams.

(3) Set the voltmeter to the 15 Volt DC scale.

(4) Remove distributor cap from distributor (two screws). Rotate (crank) the engine until the distributor rotor is pointed to approximately the 11 o'clock position. The movable pulse ring should now be within the sensor pickup.

(5) Turn ignition key to ON position. The voltmeter should read approximately 5.0 volts.

(6) If voltage is not present, check the voltmeter leads for a good connection.

(7) If voltage is still not present, check for voltage at the supply wire. For wire identification, refer to Group 8W, Wiring Diagrams.

(8) If voltage is not present at supply wire, check for voltage at pin-7 of powertrain control module (PCM) 60-way connector. Leave the PCM connector connected for this test.

(9) If voltage is still not present, perform vehicle test using the DRB scan tool.

(10) If voltage is present at pin-7, but not at the supply wire:

(a) Check continuity between the supply wire. This is checked between the distributor connector and pin-7 at the PCM. If continuity is not present, repair the harness as necessary.

(b) Check for continuity between the camshaft position sensor output wire and pin-44 at the PCM. If continuity is not present, repair the harness as necessary.

(c) Check for continuity between the ground circuit wire at the distributor connector and ground. If continuity is not present, repair the harness as necessary.

(11) While observing the voltmeter, crank the engine with ignition switch. The voltmeter needle should fluctuate between 0 and 5 volts while the engine is cranking. This verifies that the camshaft position sensor in the distributor is operating properly and a sync pulse signal is being generated.

If sync pulse signal is not present, replacement of the camshaft position sensor is necessary.

For removal or installation of ignition system components, refer to the Component Removal/Installation section of this group.

For system operation and component identification, refer to the Component Identification/System Operation section of this group.

CRANKSHAFT POSITION SENSOR TEST

To perform a complete test of this sensor and its circuitry, refer to the DRB scan tool. Also refer to the appropriate Powertrain Diagnostics Procedures manual. To test the sensor only, refer to the following:

The sensor is located on the transmission bellhousing at the left/rear side of the engine block (Figs. 2, 3 or 4).

(1) Near the rear of the intake manifold, disconnect sensor pigtail harness connector from main wiring harness.

(2) Place an ohmmeter across terminals B and C (Fig. 5). Ohmmeter should be set to 1K-to-10K scale for this test. The meter reading should be open (no resistance). Replace sensor if a low resistance is indicated.

For removal or installation of ignition system components, refer to the Component Removal/Installation section of this group.

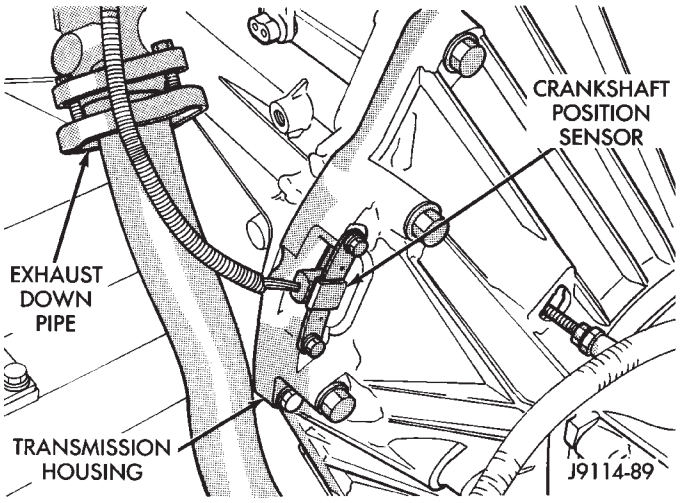

Fig. 2 Crankshaft Position Sensor—2.5L 4-Cyl. Engine—Typical

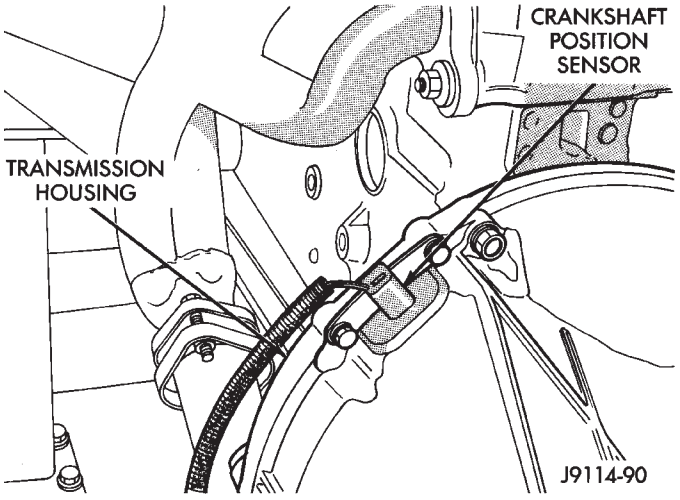

Fig. 3 Crankshaft Position Sensor—4.0L 6-Cyl. Engine—All Except YJ models With Auto. Trans.

DISTRIBUTOR CAP

INSPECTION

Remove the distributor cap and wipe it clean with a dry lint free cloth. Visually inspect the cap for cracks, carbon paths, broken towers, or damaged rotor button (Figs. 6 and 7). Also check for white deposits on the inside (caused by condensation entering the cap through cracks). Replace any cap that displays charred or eroded terminals. The inside flat surface of a terminal end (faces toward rotor) will indicate some evidence of erosion from normal operation. Examine the terminal ends for evidence of mechanical interference with the rotor tip.

If replacement of the distributor cap is necessary, transfer spark plug cables from the original cap to the new cap. This should be done one cable at a time. Each cable is installed onto the tower of the new cap that corresponds to its tower position on the original

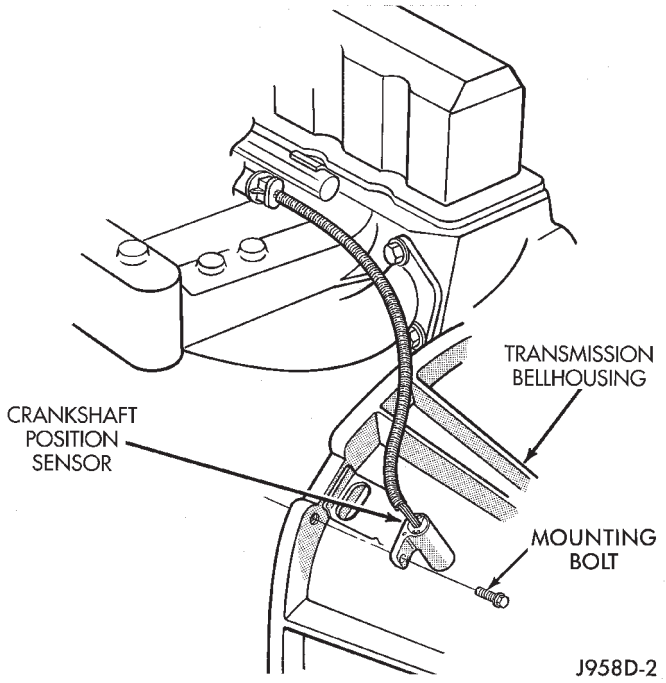

Fig. 4 Crankshaft Position Sensor—4.0L 6-Cyl. Engine—YJ models With Auto. Trans.

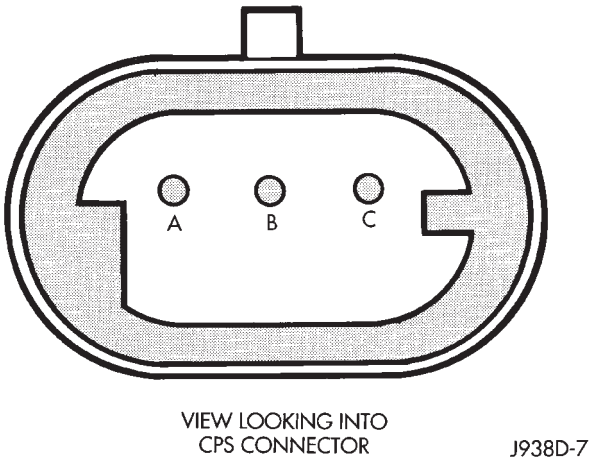

Fig. 5 Crankshaft Position Sensor Connector

cap. Fully seat the cables onto the towers. If necessary, refer to the engine Firing Order diagrams (Figs. 8 or 9).

DISTRIBUTOR ROTOR

Visually inspect the rotor (Fig. 10) for cracks, evidence of corrosion, or the effects of arcing on the metal tip. Also check for evidence of mechanical interference with the cap. Some charring is normal on the end of the metal tip. The silicone-dielectric-varnish-compound applied to the rotor tip for radio interference noise suppression, will appear charred. This is normal. **Do not remove the charred compound.** Test the spring for insufficient tension. Replace a rotor that displays any of these adverse conditions.

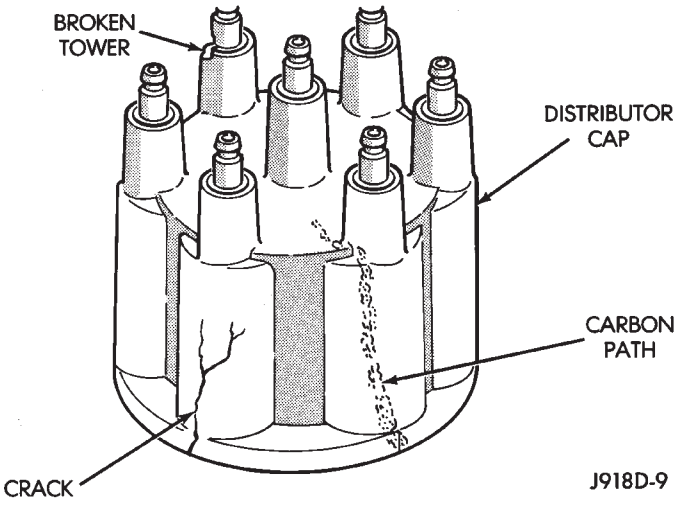

Fig. 6 Cap Inspection—External—Typical

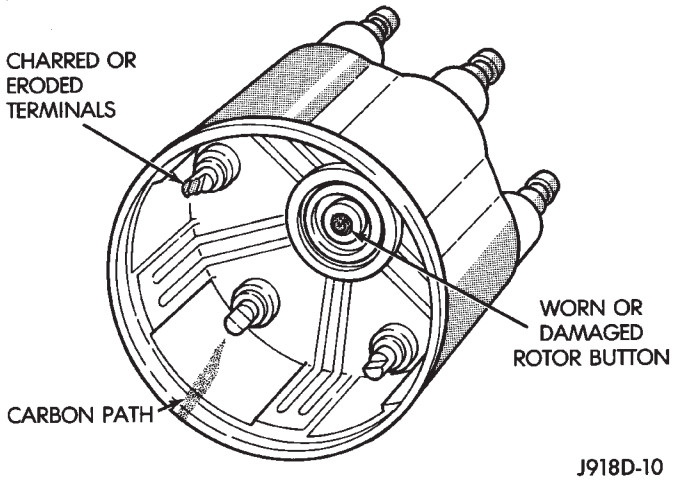

Fig. 7 Cap Inspection—Internal—Typical

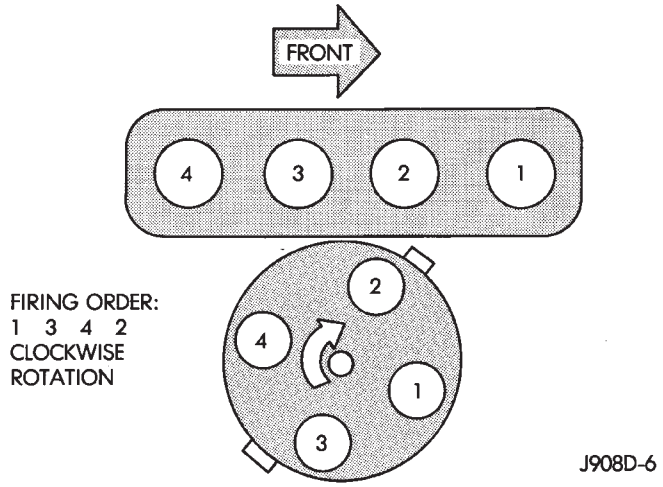

Fig. 8 Firing Order—2.5L 4-Cylinder Engine

DRB SCAN TOOL

For operation of the DRB scan tool, refer to the appropriate Powertrain Diagnostic Procedures service manual.

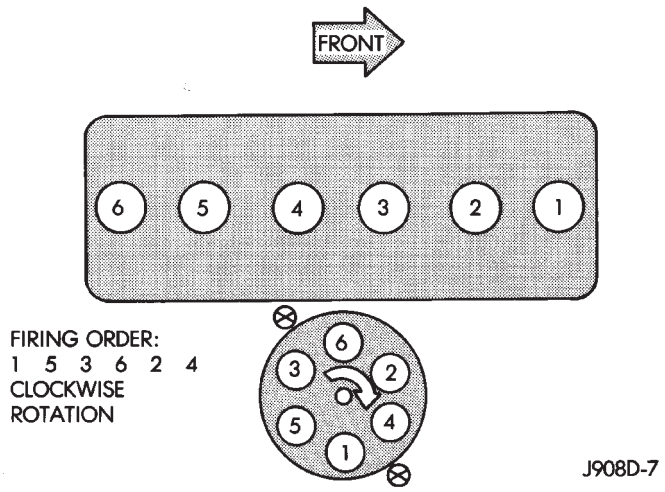

Fig. 9 Firing Order—4.0L 6-Cylinder Engine

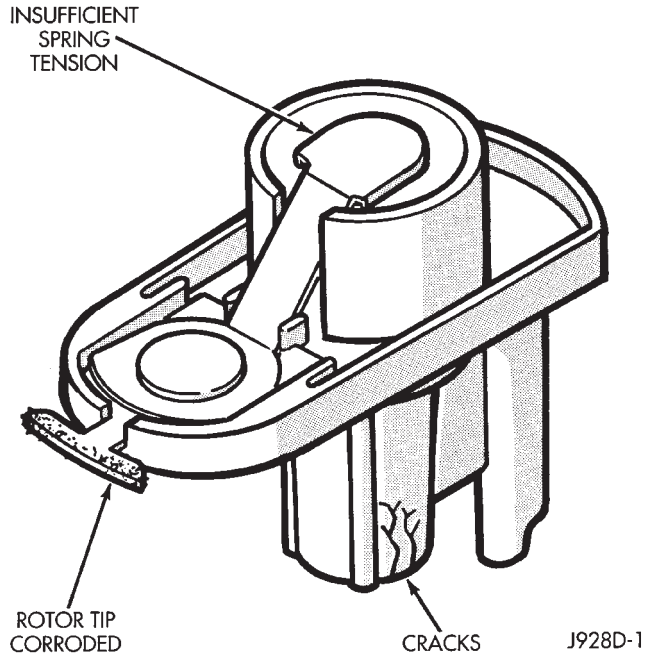

Fig. 10 Rotor Inspection—Typical

IGNITION COIL

To perform a complete test of the ignition coil and its circuitry, refer to the DRB scan tool. Also refer to the appropriate Powertrain Diagnostics Procedures manual. To test the coil only, refer to the following:

The ignition coil (Fig. 11) is designed to operate without an external ballast resistor.

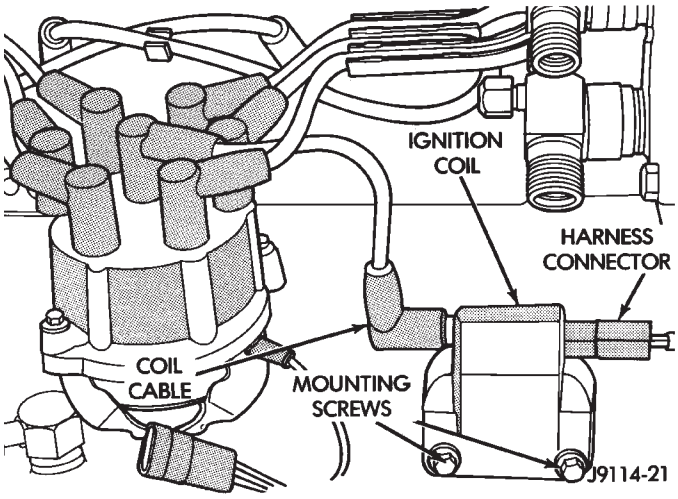

Fig. 11 Ignition Coil—Typical (4.0L Shown)

Inspect the ignition coil for arcing. Test the coil according to coil tester manufacturer's instructions. Test the coil primary and secondary resistance. Replace any coil that does not meet specifications. Refer to the Ignition Coil Resistance chart.

If the ignition coil is being replaced, the secondary spark plug cable must also be checked. Replace cable if it has been burned or damaged.

Arcing at the tower will carbonize the cable nipple, which if it is connected to a new ignition coil, will cause the coil to fail.

If the secondary coil cable shows any signs of damage, it should be replaced with a new cable and new terminal. Carbon tracking on the old cable can cause arcing and the failure of a new ignition coil.

ENGINE COOLANT TEMPERATURE SENSOR TEST

For an operational description, diagnosis and removal/installation procedures, refer to Group 14, Fuel System.

IGNITION COIL RESISTANCE

COIL (MANUFACTURER)	PRIMARY RESISTANCE 21–27°C (70–80°F)	SECONDARY RESISTANCE 21–27°C (70–80°F)
Diamond	0.97 - 1.18 Ohms	11,300 - 15,300 Ohms
Toyodenso	0.95 - 1.20 Ohms	11,300 - 13,300 Ohms

J918D-2

IGNITION SECONDARY CIRCUIT DIAGNOSIS

CHECKING FOR SPARK

CAUTION: When disconnecting a high voltage cable from a spark plug or from the distributor cap, twist the rubber boot slightly (1/2 turn) to break it loose (Fig. 12). Grasp the boot (not the cable) and pull it off with a steady, even force.

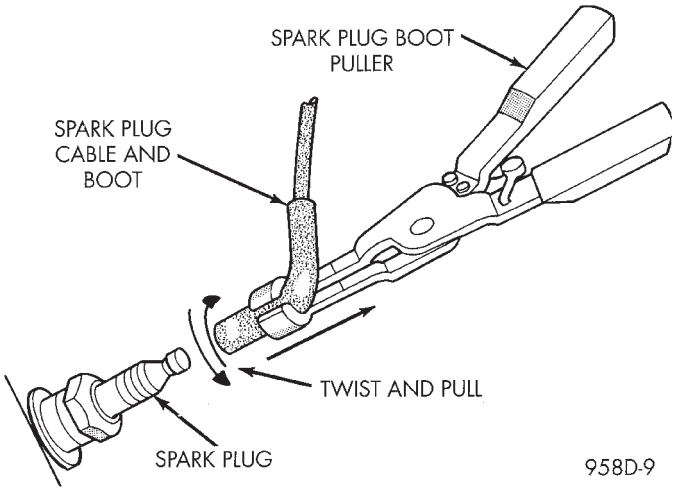

Fig. 12 Cable Removal

(1) Disconnect the ignition coil secondary cable from center tower of the distributor cap. Hold the cable terminal approximately 12 mm (1/2 in.) from a good engine ground (Fig. 13).

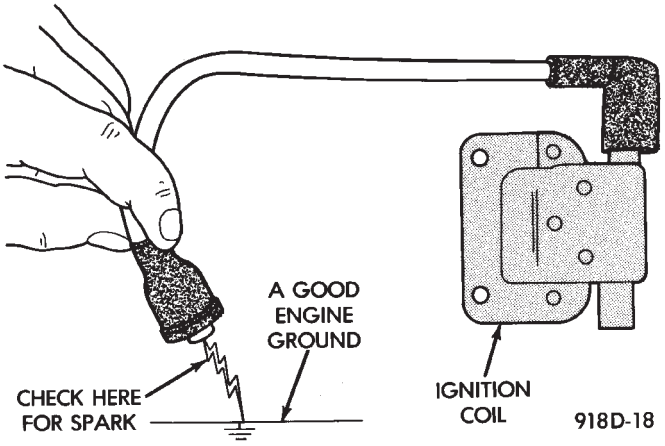

Fig. 13 Checking for Spark—Typical

WARNING: BE VERY CAREFUL WHEN THE ENGINE IS CRANKING. DO NOT PUT YOUR HANDS NEAR THE PULLEYS, BELTS OR THE FAN. DO NOT WEAR LOOSE FITTING CLOTHING.

(2) Rotate (crank) the engine with the starter motor and observe the cable terminal for a steady arc. If steady arcing does not occur, inspect the secondary coil cable. Refer to Spark Plug Cables in this group. Also inspect the distributor cap and rotor for cracks or burn marks. Repair as necessary. If steady arcing occurs, connect ignition coil cable to the distributor cap.

(3) Remove a cable from one spark plug.

(4) Using insulated pliers, hold the cable terminal approximately 12 mm (1/2 in.) from the engine cylinder head or block while rotating the engine with the starter motor. Observe the spark plug cable terminal for an arc. If steady arcing occurs, it can be expected that the ignition secondary system is operating correctly. **(note that if the ignition coil cable is removed for this test, instead of a spark plug cable, the spark intensity will be much higher.)** If steady arcing occurs at the spark plug cables, but the engine will not start, connect the DRB scan tool. Refer to the Powertrain Diagnostic Procedures service manual.

FAILURE TO START TEST

To prevent unnecessary diagnostic time and wrong test results, the previous Checking For Spark test should be performed prior to this test.

WARNING: SET PARKING BRAKE OR BLOCK THE DRIVE WHEELS BEFORE PROCEEDING WITH THIS TEST.

(1) Unplug the ignition coil harness connector at the coil (Fig. 14).

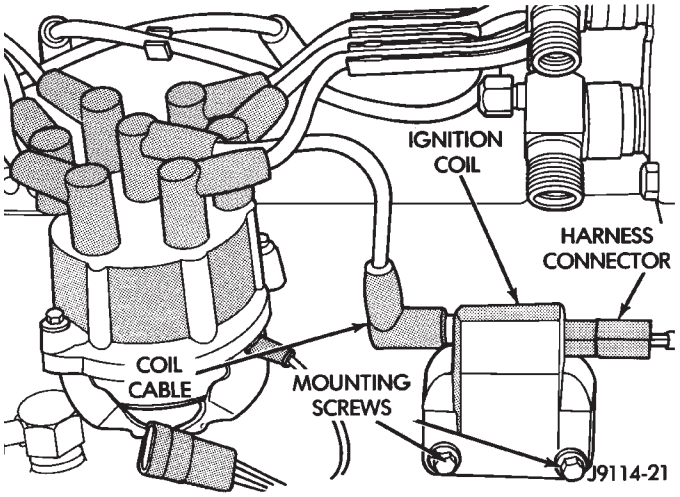

Fig. 14 Coil Harness Connector—Typical (4.0L Shown)

(2) Connect a set of small jumper wires (18 gauge or smaller) between the disconnected harness terminals and the ignition coil terminals. To determine polarity at connector and coil, refer to the Wiring Diagrams section.

(3) Attach one lead of a voltmeter to the positive (12 volt) jumper wire. Attach the negative side of voltmeter to a good ground. Determine that sufficient battery voltage (12.4 volts) is present for the starting and ignition systems.

(4) Crank the engine for 5 seconds while monitoring the voltage at the coil positive terminal:
- If the voltage remains near zero during the entire period of cranking, refer to On-Board Diagnostics in Group 14, Fuel Systems. Check the powertrain control module (PCM) and auto shutdown relay.
- If voltage is at or near battery voltage and drops to zero after 1-2 seconds of cranking, check the camshaft position sensor-to-PCM circuit. Refer to On-Board Diagnostics in Group 14, Fuel Systems.
- If voltage remains at or near battery voltage during the entire 5 seconds, turn the key off. Remove the 60-way connector (Fig. 15) from the PCM. Check 60-way connector for any spread terminals.

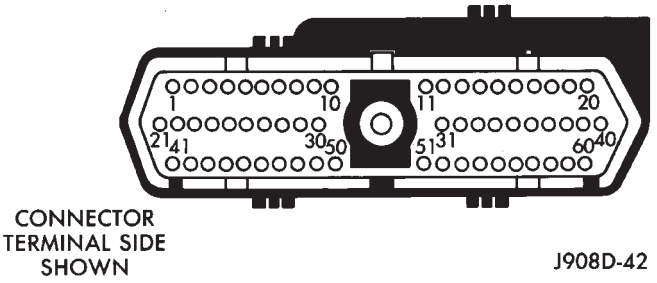

Fig. 15 PCM 60-Way Connector

(5) Remove test lead from the coil positive terminal. Connect an 18 gauge jumper wire between the battery positive terminal and the coil positive terminal.

(6) Make the special jumper shown in figure 16. Using the jumper, **momentarily** ground pin/cavity number 19 of the PCM 60-way connector. A spark should be generated at the coil cable when the ground is removed.

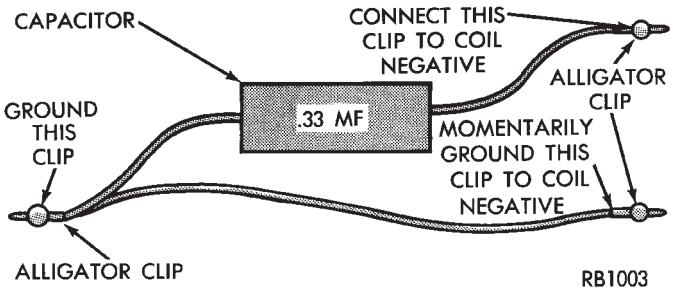

Fig. 16 Special Jumper Ground-to-Coil Negative Terminal

(7) If spark is generated, replace the powertrain control module (PCM).

(8) If spark is not seen, use the special jumper to ground the coil negative terminal directly.

(9) If spark is produced, repair wiring harness for an open condition.

(10) If spark is not produced, replace the ignition coil.

IGNITION TIMING

Base (initial) ignition timing is NOT adjustable on any of the 2.5L 4-cylinder or 4.0L 6-cylinder engines. Do not attempt to adjust ignition timing by rotating the distributor.

Do not attempt to modify the distributor housing to get distributor rotation. Distributor position will have no effect on ignition timing.

All ignition timing functions are controlled by the powertrain control module (PCM). Refer to On-Board Diagnostics in the Multi-Port Fuel Injection—General Diagnosis section of Group 14, Fuel Systems for more information. Also refer to the appropriate Powertrain Diagnostics Procedures service manual for operation of the DRB Scan Tool.

INTAKE MANIFOLD AIR TEMPERATURE SENSOR TEST

For an operational description, diagnosis or removal/ installation procedures, refer to Group 14, Fuel Systems.

MANIFOLD ABSOLUTE PRESSURE (MAP) SENSOR TEST

For an operational description, diagnosis and removal/installation procedures, refer to Group 14, Fuel System.

POWERTRAIN CONTROL MODULE (PCM)

The PCM (formerly referred to as the SBEC or engine controller) is located in the engine compartment behind the windshield washer fluid tank on YJ models (Fig. 17). It is located in the engine compartment next to the air cleaner on XJ models (Fig. 18).

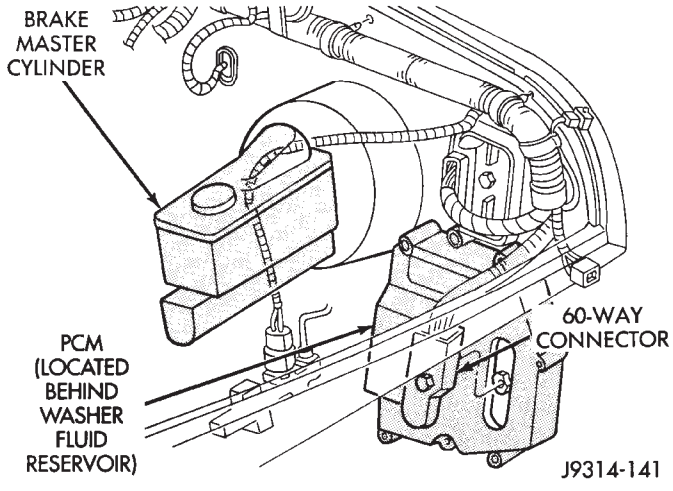

Fig. 17 PCM Location—YJ Models

The ignition system is controlled by the PCM.

For removal and installation of this component, refer to the Component Removal/Installation section of this group.

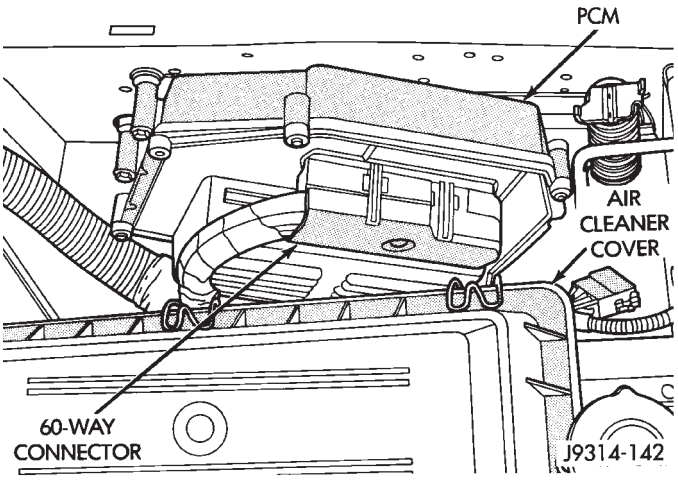

Fig. 18 PCM Location—XJ Models

For diagnostics, refer to the appropriate Powertrain Diagnostic Procedures service manual for operation of the DRB scan tool.

SPARK PLUGS

For spark plug removal, cleaning, gap adjustment and installation, refer to the Component Removal/Installation section of this group.

Faulty carbon and/or gas fouled plugs generally cause hard starting, but they will clean up at higher engine speeds. Faulty plugs can be identified in a number of ways: poor fuel economy, power loss, decrease in engine speed, hard starting and, in general, poor engine performance.

Remove the spark plugs and examine them for burned electrodes and fouled, cracked or broken porcelain insulators. For identification, keep plugs arranged in the order in which they were removed from the engine. An isolated plug displaying an abnormal condition indicates that a problem exists in the corresponding cylinder. Replace spark plugs at the intervals recommended in the maintenance chart in Group 0, Lubrication and Maintenance.

Spark plugs that have low mileage may be cleaned and reused if not otherwise defective. Refer to the following Spark Plug Condition section of this group.

CONDITION

NORMAL OPERATING

The few deposits present on the spark plug will probably be light tan or slightly gray in color. This is evident with most grades of commercial gasoline (Fig. 19). There will not be evidence of electrode burning. Gap growth will not average more than approximately 0.025 mm (.001 in) per 1600 km (1000 miles) of operation. Spark plugs that have normal wear can usually be cleaned, have the electrodes filed, have the gap set and then be installed.

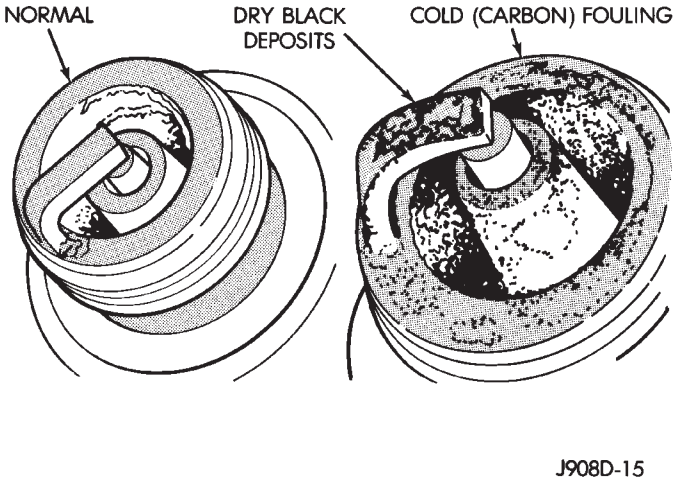

Fig. 19 Normal Operation and Cold (Carbon) Fouling

Some fuel refiners in several areas of the United States have introduced a manganese additive (MMT) for unleaded fuel. During combustion, fuel with MMT causes the entire tip of the spark plug to be coated with a rust colored deposit. This rust color can be misdiagnosed as being caused by coolant in the combustion chamber. Spark plug performance is not affected by MMT deposits.

COLD FOULING/CARBON FOULING

Cold fouling is sometimes referred to as carbon fouling. The deposits that cause cold fouling are basically carbon (Fig. 19). A dry, black deposit on one or two plugs in a set may be caused by sticking valves or defective spark plug cables. Cold (carbon) fouling of the entire set of spark plugs may be caused by a clogged air cleaner element or repeated short operating times (short trips).

WET FOULING OR GAS FOULING

A spark plug coated with excessive wet fuel or oil is wet fouled. In older engines, worn piston rings, leaking valve guide seals or excessive cylinder wear can cause wet fouling. In new or recently overhauled engines, wet fouling may occur before break-in (normal oil control) is achieved. This condition can usually be resolved by cleaning and reinstalling the fouled plugs.

OIL OR ASH ENCRUSTED

If one or more spark plugs are oil or oil ash encrusted (Fig. 20), evaluate engine condition for the cause of oil entry into that particular combustion chamber.

ELECTRODE GAP BRIDGING

Electrode gap bridging may be traced to loose deposits in the combustion chamber. These deposits accumulate on the spark plugs during continuous stop-and-go driving. When the engine is suddenly

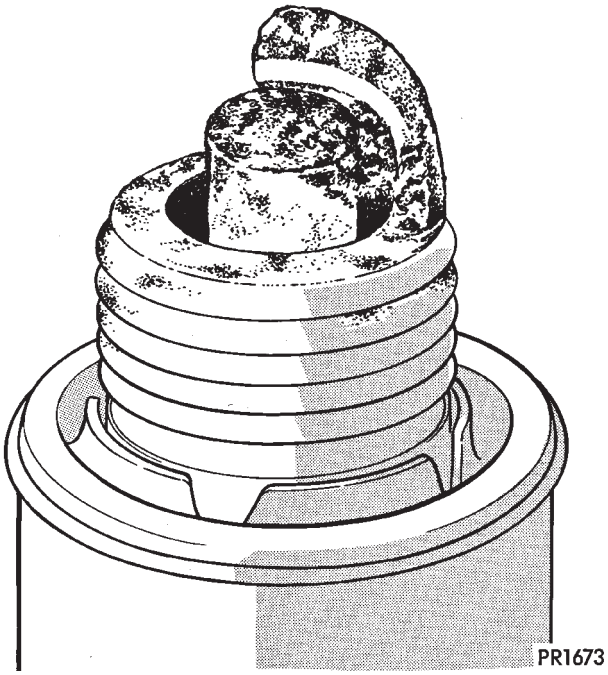

Fig. 20 Oil or Ash Encrusted

subjected to a high torque load, deposits partially liquefy and bridge the gap between electrodes (Fig. 21). This short circuits the electrodes. Spark plugs with electrode gap bridging can be cleaned using standard procedures.

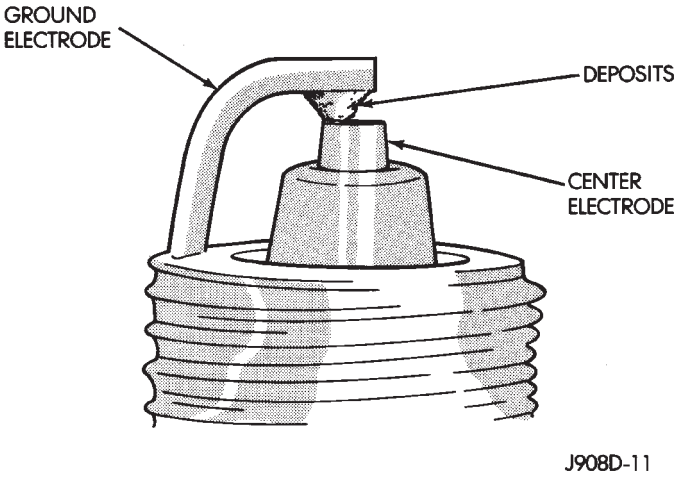

Fig. 21 Electrode Gap Bridging

SCAVENGER DEPOSITS

Fuel scavenger deposits may be either white or yellow (Fig. 22). They may appear to be harmful, but this is a normal condition caused by chemical additives in certain fuels. These additives are designed to change the chemical nature of deposits and decrease spark plug misfire tendencies. Notice that accumulation on the ground electrode and shell area may be heavy, but the deposits are easily removed. Spark plugs with scavenger deposits can be considered normal in condition and can be cleaned using standard procedures.

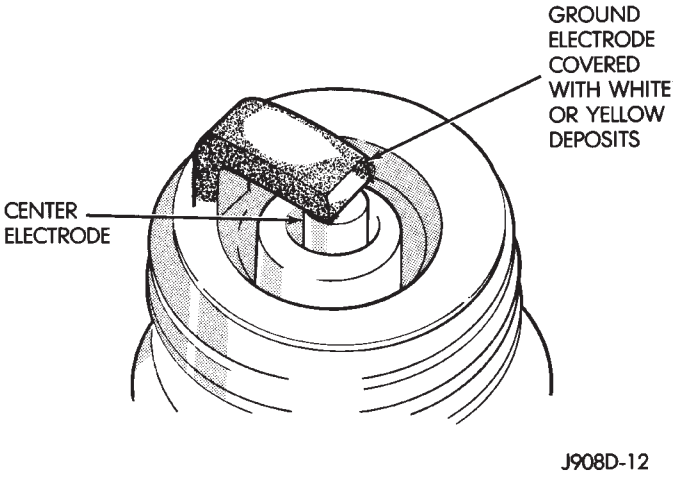

Fig. 22 Scavenger Deposits

CHIPPED ELECTRODE INSULATOR

A chipped electrode insulator usually results from bending the center electrode while adjusting the spark plug electrode gap. Under certain conditions, severe detonation can also separate the insulator from the center electrode (Fig. 23). Spark plugs with this condition must be replaced.

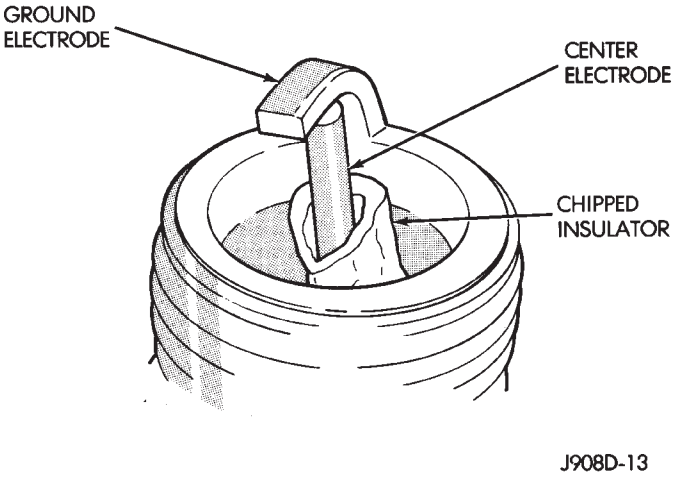

Fig. 23 Chipped Electrode Insulator

PREIGNITION DAMAGE

Preignition damage is usually caused by excessive combustion chamber temperature. The center electrode dissolves first and the ground electrode dissolves somewhat latter (Fig. 24). Insulators appear relatively deposit free. Determine if the spark plug has the correct heat range rating for the engine. Determine if ignition timing is over advanced, or if other operating conditions are causing engine overheating. (The heat range rating refers to the operating temperature of a particular type spark plug. Spark plugs are designed to operate within specific

temperature ranges. This depends upon the thickness and length of the center electrodes porcelain insulator.)

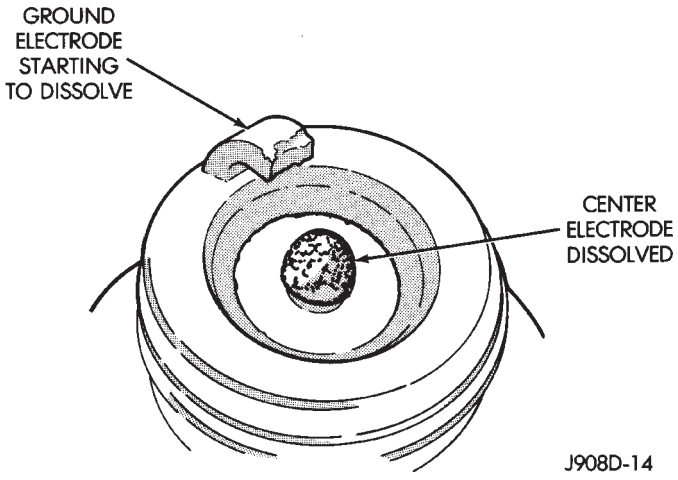

Fig. 24 Preignition Damage

SPARK PLUG OVERHEATING

Overheating is indicated by a white or gray center electrode insulator that also appears blistered (Fig. 25). The increase in electrode gap will be considerably in excess of 0.001 inch per 1000 miles of operation. This suggests that a plug with a cooler heat range rating should be used. Over advanced ignition timing, detonation and cooling system malfunctions can also cause spark plug overheating.

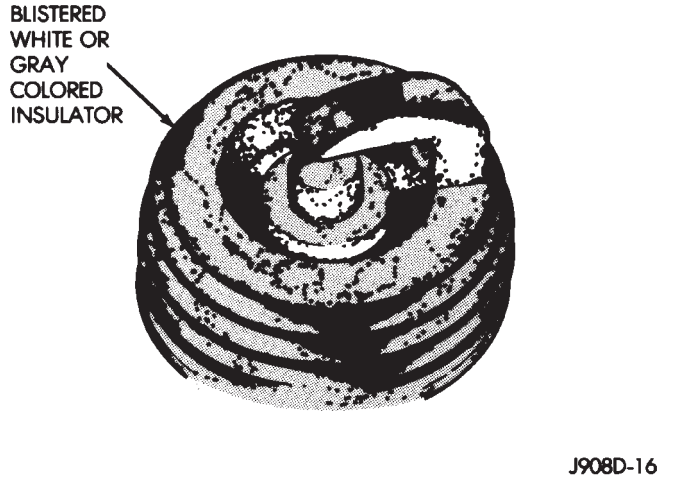

Fig. 25 Spark Plug Overheating

SPARK PLUG SECONDARY CABLES

TESTING

Spark plug cables are sometimes referred to as secondary ignition cables or secondary wires. The cables transfer electrical current from the distributor to individual spark plugs at each cylinder. The spark plug cables are of nonmetallic construction and have a built in resistance. The cables provide suppression of radio frequency emissions from the ignition system.

Check the high-tension cable connections for good contact at the ignition coil, distributor cap towers and spark plugs. Terminals should be fully seated. The terminals and spark plug covers should be in good condition. Terminals should fit tightly to the ignition coil, distributor cap and spark plugs. The spark plug cover (boot) of the cable should fit tight around the spark plug insulator. Loose cable connections can cause corrosion and increase resistance, resulting in shorter cable service life.

Clean the high tension cables with a cloth moistened with a nonflammable solvent and wipe dry. Check for brittle or cracked insulation.

When testing secondary cables for damage with an oscilloscope, follow the instructions of the equipment manufacturer.

If an oscilloscope is not available, spark plug cables may be tested as follows:

CAUTION: Do not leave any one spark plug cable disconnected for longer than necessary during testing. This may cause possible heat damage to the catalytic converter. Total test time must not exceed ten minutes.

With the engine not running, connect one end of a test probe to a good ground. Start the engine and run the other end of the test probe along the entire length of all spark plug cables. If cables are cracked or punctured, there will be a noticeable spark jump from the damaged area to the test probe. The cable running from the ignition coil to the distributor cap can be checked in the same manner. Cracked, damaged or faulty cables should be replaced with resistance type cable. This can be identified by the words ELECTRONIC SUPPRESSION printed on the cable jacket.

Use an ohmmeter to test for open circuits, excessive resistance or loose terminals. Remove the distributor cap from the distributor. **Do not remove cables from cap.** Remove cable from spark plug. Connect ohmmeter to spark plug terminal end of cable and to corresponding electrode in distributor cap. Resistance should be 250 to 1000 Ohms per inch of cable. If not, remove cable from distributor cap tower and connect ohmmeter to the terminal ends of cable. If resistance is not within specifications as found in the Spark Plug Cable Resistance chart, replace the cable. Test all spark plug cables in this manner.

SPARK PLUG CABLE RESISTANCE

MINIMUM	MAXIMUM
250 Ohms Per Inch	1000 Ohms Per Inch
3000 Ohms Per Foot	12,000 Ohms Per Foot

J908D-43

To test ignition coil-to-distributor cap cable, do not remove the cable from the cap. Connect ohmmeter to rotor button (center contact) of distributor cap and terminal at ignition coil end of cable. If resistance is not within specifications as found in the Spark Plug Cable Resistance chart, remove the cable from the distributor cap. Connect the ohmmeter to the terminal ends of the cable. If resistance is not within specifications as found in the Spark Plug Cable Resistance chart, replace the cable. Inspect the ignition coil tower for cracks, burns or corrosion.

For removal and installation of spark plug cables, refer to Spark Plug Secondary Cables in the Component Removal/Installation section.

THROTTLE POSITION SENSOR TEST

For an operational description, diagnosis and removal/installation procedures, refer to Group 14, Fuel System.

OXYGEN (O2S) SENSOR TESTS

For an operational description, diagnosis or removal/ installation procedures, refer to Group 14, Fuel Systems.

ON-BOARD DIAGNOSTICS

FOR CERTAIN IGNITION SYSTEM COMPONENTS

The powertrain control module (PCM) performs an On-Board Diagnostic (OBD) check for certain ignition system components on all vehicles. This is done by setting a diagnostic trouble code (DTC).

A DTC can be obtained in two different ways. One of the ways is by connecting the DRB scan tool to the data link connector. This connector is located in the engine compartment (Figs. 26 or 27). Refer to the appropriate Powertrain Diagnostic Procedures service manual for operation of the DRB scan tool. The other way is to cycle the ignition key and observe the malfunction indicator lamp (MIL). The MIL lamp is displayed on the instrument panel as the CHECK ENGINE lamp (Figs. 28 or 29). This lamp will flash a numeric code. If a numeric code number 11 (for the crankshaft position sensor) or 42 (for the ASD relay) is observed, a problem has been found in the ignition system.

Note that the CHECK ENGINE lamp will illuminate initially for approximately two seconds each time the ignition key is turned to the ON position. This is done for a bulb test.

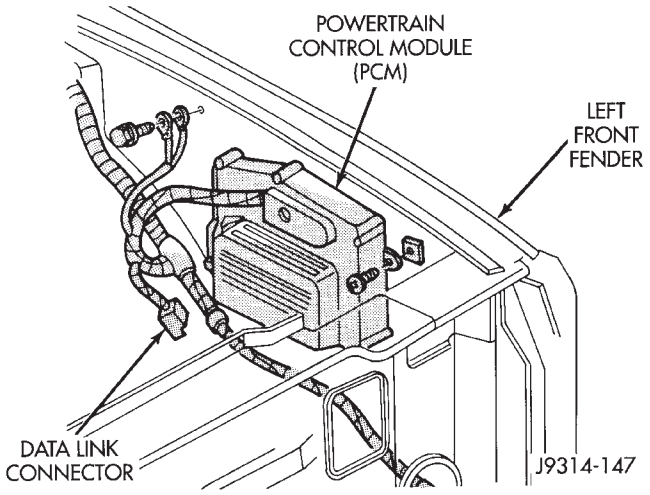

Fig. 26 Data Link Connector—XJ Models—Typical

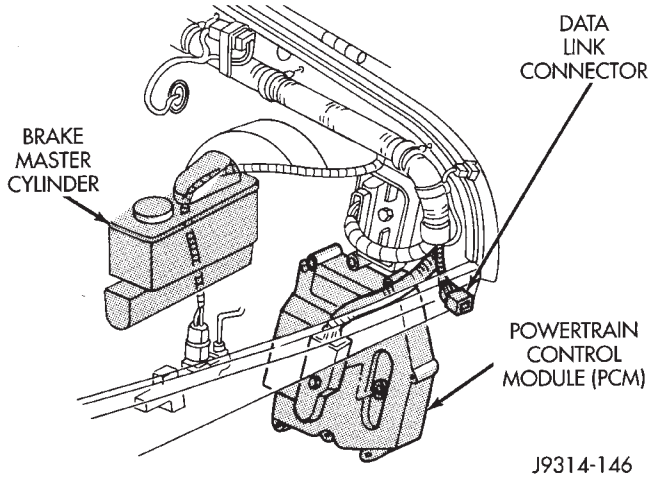

Fig. 27 Data Link Connector—YJ Models—Typical

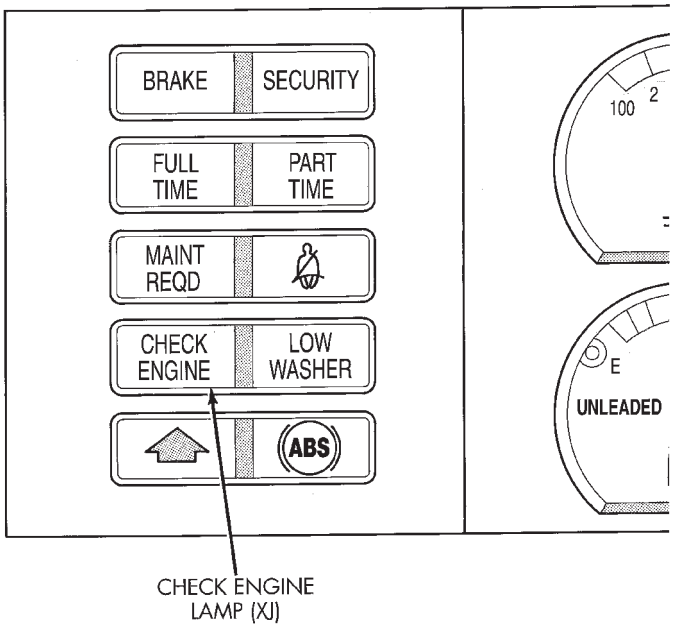

Fig. 28 Check Engine Lamp—XJ Models—Typical

For a complete operational description of all DTC's, for accessing a DTC and for erasing a DTC, refer to On-Board Diagnostics. This can be found in the General Diagnosis sections of Group 14, Fuel System. For numeric flash lamp code charts, refer to Diagnostic Trouble Code (DTC). This can also be found in the General Diagnosis sections of Group 14, Fuel System.

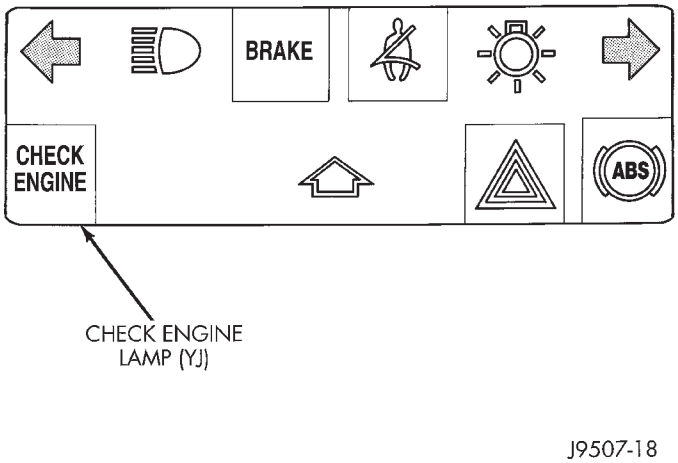

Fig. 29 Check Engine Lamp—YJ Models—Typical

COMPONENT REMOVAL/INSTALLATION

INDEX

	page
Automatic Shutdown (ASD) Relay	17
Camshaft Position Sensor	17
Crankshaft Position Sensor	17
Distributor	19
Engine Coolant Temperature Sensor	19
General Information	17
Ignition Coil	22
Intake Manifold Air Temperature Sensor	23
Manifold Absolute Pressure (MAP) Sensor	23
Oxygen (O2S) Sensor	23
Powertrain Control Module (PCM)	23
Spark Plug Secondary Cables	24
Spark Plugs	23
Throttle Position Sensor (TPS)	25

GENERAL INFORMATION

This section of the group, Component Removal/Installation, will discuss the removal and installation of ignition system components.

For basic ignition system diagnostics and service adjustments, refer to the Diagnostics/Service Procedures section of this group.

For system operation and component identification, refer to the Component Identification/System Operation section of this group.

AUTOMATIC SHUTDOWN (ASD) RELAY

The ASD relay is installed in the power distribution center (PDC) (Figs. 1 or 2). Relay location is printed on the PDC cover.

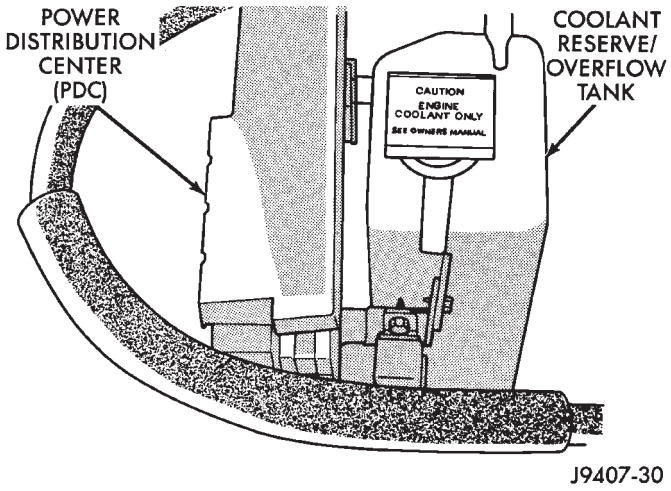

Fig. 1 PDC—XJ Models

REMOVAL

(1) Remove the PDC cover.
(2) Remove the relay by lifting straight up.

INSTALLATION

(1) Check the condition of relay wire terminals at PDC before installing relay. Repair as necessary.
(2) Push the relay into the connector.
(3) Install the relay cover.

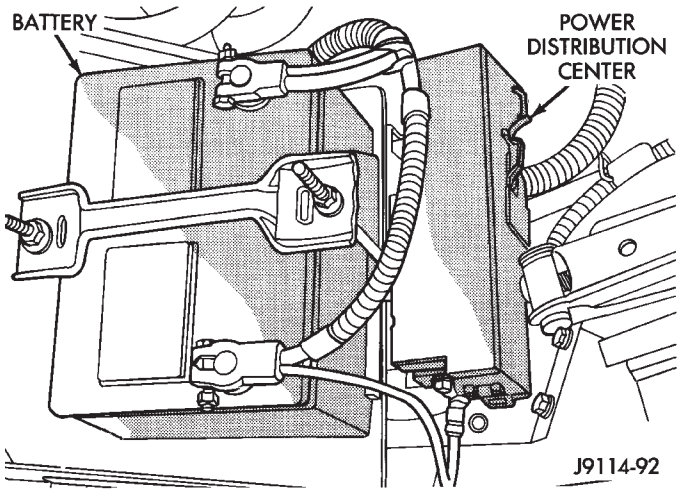

Fig. 2 PDC—YJ Models

CAMSHAFT POSITION SENSOR

The camshaft position sensor is located in the distributor (Fig. 3).

REMOVAL

Distributor removal is not necessary to remove camshaft position sensor.

(1) Disconnect negative battery cable at battery.
(2) Remove distributor cap from distributor (two screws).
(3) Disconnect camshaft position sensor wiring harness from main engine wiring harness.
(4) Remove distributor rotor from distributor shaft.
(5) Lift the camshaft position sensor assembly from the distributor housing (Fig. 3).

INSTALLATION

(1) Install camshaft position sensor to distributor. Align sensor into notch on distributor housing.
(2) Connect wiring harness.
(3) Install rotor.
(4) Install distributor cap. Tighten mounting screws.

CRANKSHAFT POSITION SENSOR

The crankshaft position sensor is mounted in the

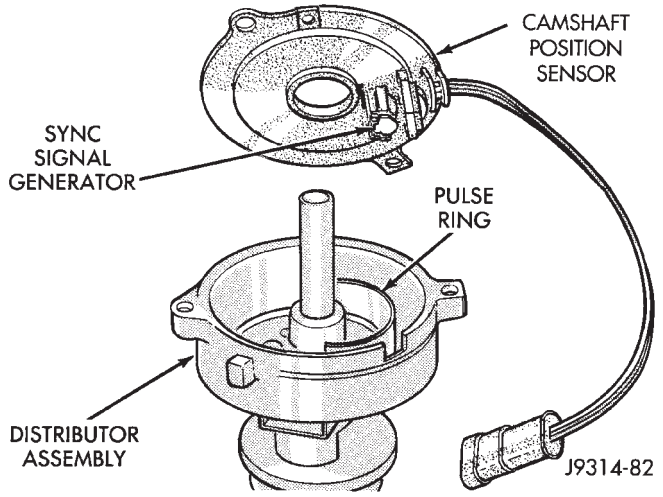

Fig. 3 Camshaft Position Sensor

transmission bellhousing at the left/rear side of the engine block (Figs. 4, 5 or 6).

On all 2.5L 4-cylinder and 4.0L 6-cylinder engines (except YJ models with an automatic transmission and 4.0L 6-cylinder engine) the sensor is attached with two bolts. The 2.5L 4-cylinder engine, when equipped with an automatic transmission, will have the sensor mounted with two nuts.

On YJ models with a 4.0L 6-cylinder engine and automatic transmission, the sensor is attached with a single bolt (Fig. 6).

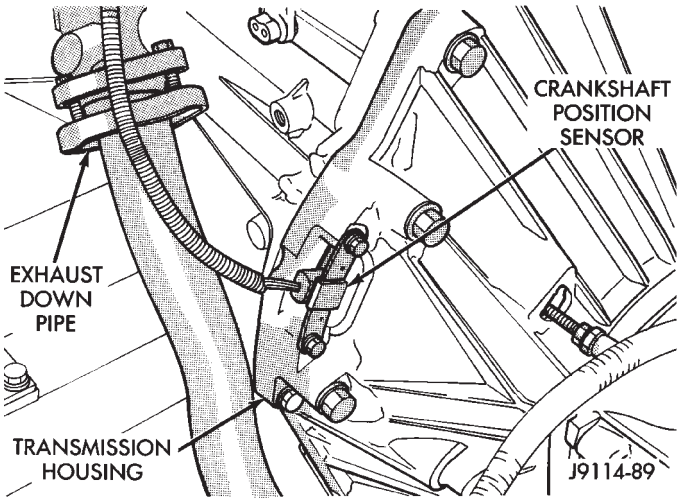

Fig. 4 Crankshaft Position Sensor—2.5L 4-Cylinder Engine—Typical

REMOVAL—ALL ENGINES

(1) Near the rear of the intake manifold, disconnect the pigtail harness (on the sensor) from the main electrical harness.

(2) Remove the nut holding sensor wire clip to fuel rail mounting stud.

(3) Depending upon application, remove either the sensor mounting bolt(s) or nuts.

(4) Remove the sensor.

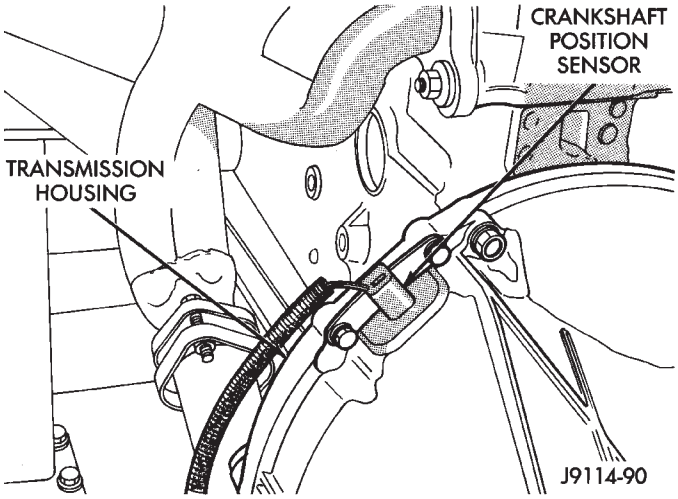

Fig. 5 Crankshaft Position Sensor—4.0L 6-Cylinder Engine—All Except YJ models With Automatic Transmission

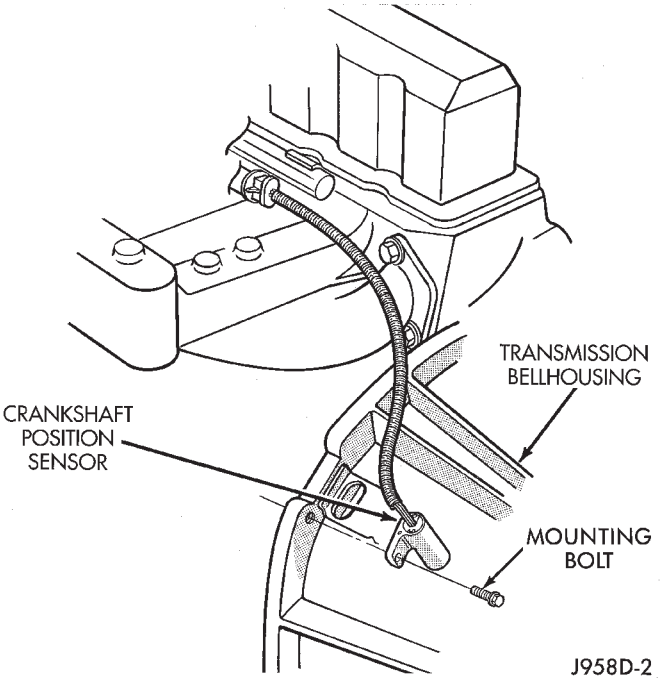

Fig. 6 Crankshaft Position Sensor—4.0L 6-Cylinder Engine—YJ models With Automatic Transmission

(5) Remove clip from sensor wire harness.

INSTALLATION—ALL EXCEPT YJ MODELS WITH 4.0L 6-CYLINDER ENGINE AND AUTOMATIC TRANSMISSION

(1) Install the sensor flush against the opening in the transmission housing.

(2) Install and tighten the two sensor mounting bolts (or nuts) to 19 N·m (14 ft. lbs.) torque.

CAUTION: On some models, two bolts are used to secure the sensor to the transmission. These bolts are specially machined to correctly space the unit to the flywheel. Do not attempt to install any other bolts.

(3) Connect the electrical connector to the sensor.
(4) Install clip on sensor wire harness.
(5) Install clip over fuel rail mounting stud. Install clip mounting nut.

INSTALLATION—YJ MODELS WITH 4.0L 6-CYLINDER ENGINE AND AUTOMATIC TRANSMISSION

(1) Install the sensor into the access hole on the transmission.
(2) Install sensor mounting bolt (Fig. 6).
(3) Tighten sensor mounting bolt to 6-to-8 N·m (50-to-70 in. lbs.) torque.
(4) Connect the electrical connector to sensor.
(5) Install the clip to sensor wire harness.
(6) Install clip over fuel rail mounting stud. Install clip mounting nut.

ENGINE COOLANT TEMPERATURE SENSOR

For an operational description, diagnosis and removal/installation procedures, refer to Group 14, Fuel System.

DISTRIBUTOR

GENERAL INFORMATION

All distributors contain an internal oil seal that prevents oil from entering the distributor housing. The seal is not serviceable.

Factory replacement distributors are equipped with a plastic alignment pin already installed. The pin is located in an access hole on the bottom of the distributor housing (Fig. 7). It is used to temporarily lock the rotor to the cylinder number 1 position during installation. The pin must be removed after installing the distributor.

The camshaft position sensor is located in the distributor on all engines (Fig. 8). For removal/installation procedures, refer to Camshaft Position Sensor. Distributor removal is not necessary for sensor removal.

Refer to figure 8 for an exploded view of the distributor.

A fork with a slot is supplied on the bottom of the distributor housing where the housing base seats against the engine block (Fig. 8). The centerline of the slot aligns with the distributor holddown bolt hole in the engine block. Because of the fork, the distributor cannot be rotated. Distributor rotation is not necessary as all ignition timing requirements are handled by the powertrain control module (PCM).

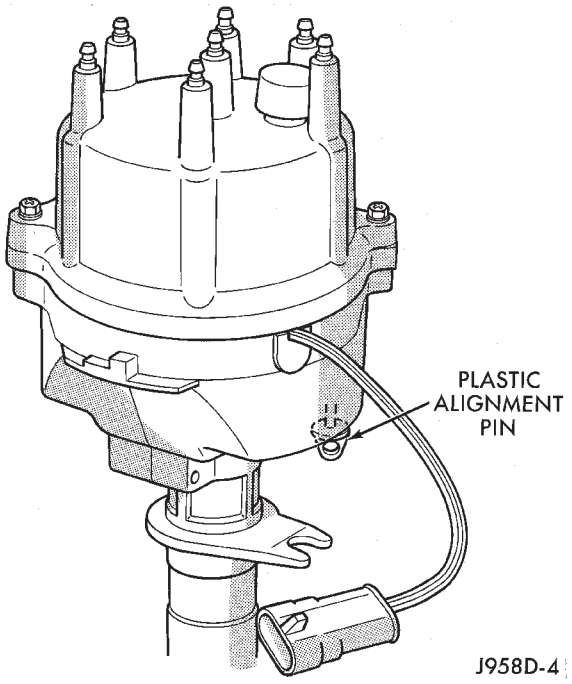

Fig. 7 Plastic Alignment Pin

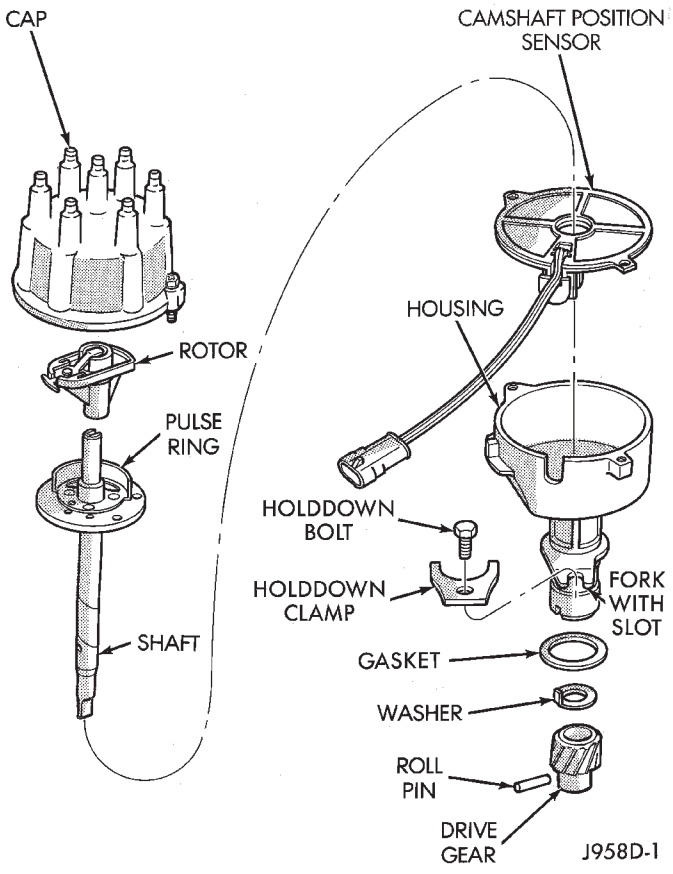

Fig. 8 Distributor—2.5L Or 4.0L Engines—Typical

The position of the distributor determines fuel synchronization only. It does not determine ignition timing.

Do not attempt to modify this fork to attain ignition timing.

REMOVAL—2.5L OR 4.0L ENGINE

(1) Disconnect the negative battery cable at the battery.

(2) Disconnect coil secondary cable at coil.

(3) Remove distributor cap from distributor (2 screws). Do not remove cables from cap. Do not remove rotor.

(4) Disconnect the distributor wiring harness from the main engine harness.

(5) Remove the cylinder number 1 spark plug.

(6) Hold a finger over the open spark plug hole. Rotate the engine at the vibration dampener bolt until compression (pressure) is felt.

Slowly continue to rotate the engine. Do this until the timing index mark on the vibration damper pulley aligns with the top dead center (TDC) mark (0 degree) on timing degree scale (Fig. 9). Always rotate the engine in direction of normal rotation. Do not rotate the engine backward to align the timing marks.

On XJ models equipped with A/C, remove the electrical cooling fan and shroud assembly from the radiator. Refer to Group 7, Cooling System for procedures.

This will provide room to turn the engine crankshaft with a socket and ratchet using the vibration damper bolt.

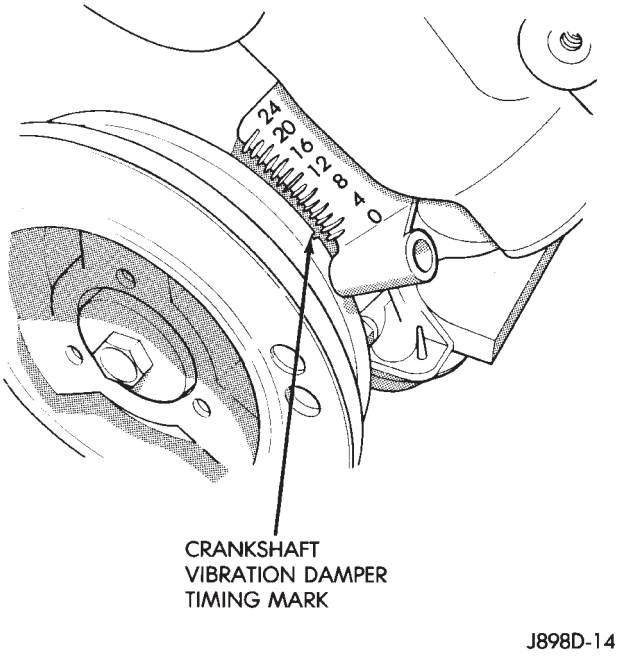

Fig. 9 Align Timing Marks

(7) Remove the distributor holddown bolt and clamp (Fig. 8).

(8) Remove the distributor from engine by slowly lifting straight up.

Note that the rotor will rotate slightly in a counterclockwise direction while lifting up the distributor. The oil pump gear will also rotate slightly in a counterclockwise direction while lifting up the distributor. This is due to the helical cut gears on the distributor and camshaft.

Note the removed position of the rotor during distributor removal. During installation, this will be referred to as the Pre-position.

2.5L 4-Cylinder Engine: Observe the slot in the oil pump gear through the hole on the side of the engine. It should be slightly before (counterclockwise of) the 10 o'clock position (Fig. 10).

4.0L 6-Cylinder Engine: Observe the slot in the oil pump gear through the hole on the side of the engine. It should be slightly before (counterclockwise of) the 11 o'clock position (Fig. 11).

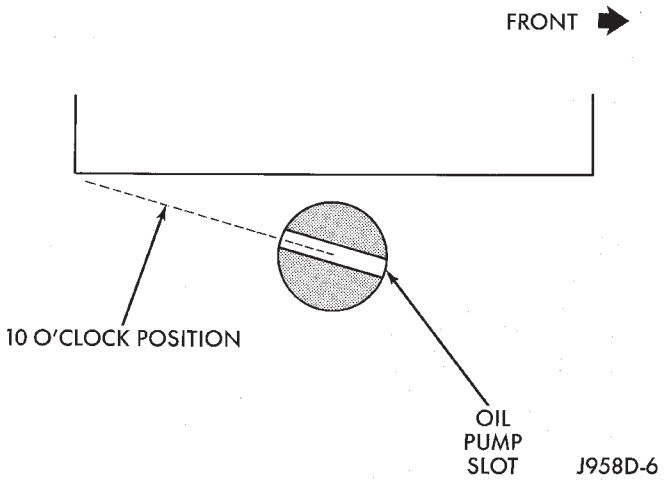

Fig. 10 Slot At 10 O'clock Position—2.5L Engine

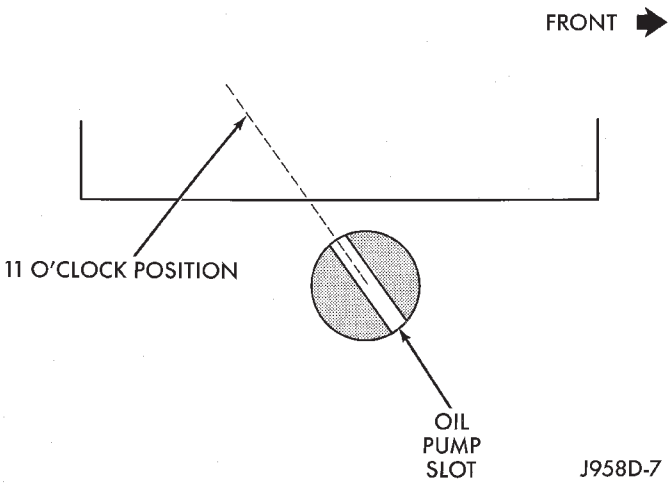

Fig. 11 Slot At 11 O'clock Position—4.0L Engine

(9) Remove and discard the old distributor-to-engine block gasket (Fig. 8).

INSTALLATION

(1) If the engine crankshaft has been rotated after distributor removal, cylinder number 1 must be returned to its proper firing stroke. Refer to the previous REMOVAL steps number 5 and 6. These steps must be done before installing distributor.

(2) Check the position of the slot on the oil pump gear. On the 2.5L engine, it should be just slightly before (counterclockwise of) the 10 o'clock position (Fig. 10). On the 4.0L engine, it should be just slightly before (counterclockwise of) the 11 o'clock position (Fig. 11). If not, place a flat blade screwdriver into the oil pump gear and rotate it into the proper position.

(3) Factory replacement distributors are equipped with a plastic alignment pin already installed (Fig. 7). This pin is used to temporarily hold the rotor to the cylinder number 1 firing position during distributor installation. If this pin is in place, proceed to step number 8. If not, proceed to step number 4.

(4) If the original distributor is to be reinstalled, such as during engine overhaul, the plastic pin will not be available. A 3/16 inch drift pin punch tool may be substituted for the plastic pin.

(5) Remove the camshaft position sensor from the distributor housing. Lift straight up.

(6) Four different alignment holes are provided on the plastic ring (Fig. 12). **Note that 2.5L and 4.0L engines have different alignment holes (Fig. 12).**

(7) Rotate the distributor shaft and install the pin punch tool through the proper alignment hole in the plastic ring (Fig. 12) and into the mating access hole in the distributor housing. This will prevent the distributor shaft and rotor from rotating.

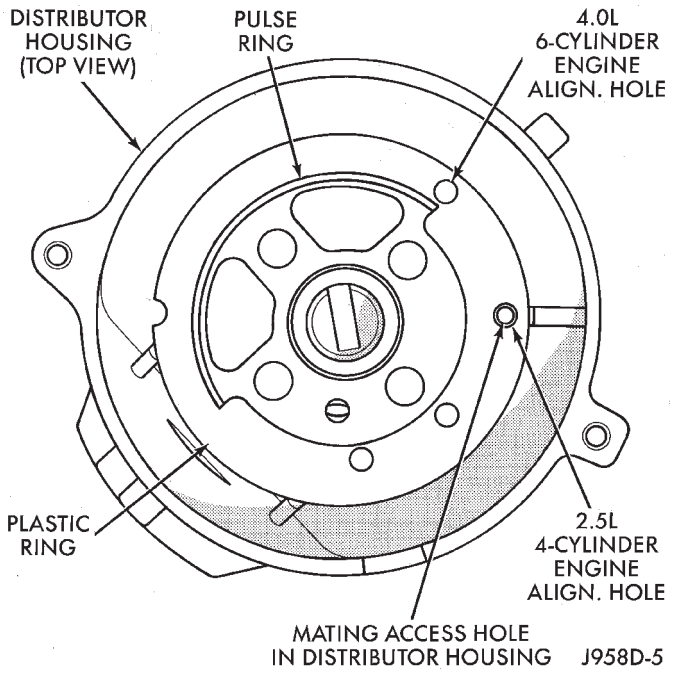

Fig. 12 Pin Alignment Holes

(8) Clean the distributor mounting hole area of the engine block.

(9) Install a new distributor-to-engine block gasket (Fig. 8).

(10) Install the rotor to the distributor shaft.

(11) **2.5L 4-Cylinder Engine:** Pre-position the distributor into the engine while holding the centerline of the base slot in the 1 o'clock position (Fig. 13). Continue to engage the distributor into the engine. The rotor and distributor will rotate clockwise during installation. This is due to the helical cut gears on the distributor and camshaft. When the distributor is fully seated to the engine block, the centerline of the base slot should be aligned to the clamp bolt mounting hole on the engine (Fig. 14). The rotor should also be pointed slightly past (clockwise of) the 3 o'clock position.

4.0L 6-Cylinder Engine: Pre-position the distributor into the engine while holding the centerline of the base slot in the 1 o'clock position (Fig. 13). Continue to engage the distributor into the engine. The rotor and distributor will rotate clockwise during installation. This is due to the helical cut gears on the distributor and camshaft. When the distributor is fully seated to the engine block, the centerline of the base slot should be aligned to the clamp bolt mounting hole on the engine (Fig. 15). The rotor should also be pointed at the 5 o'clock position.

It may be necessary to rotate the rotor and distributor shaft (very slightly) to engage the distributor shaft with the slot in the oil pump gear. The same may have to be done to engage the distributor gear with the camshaft gear.

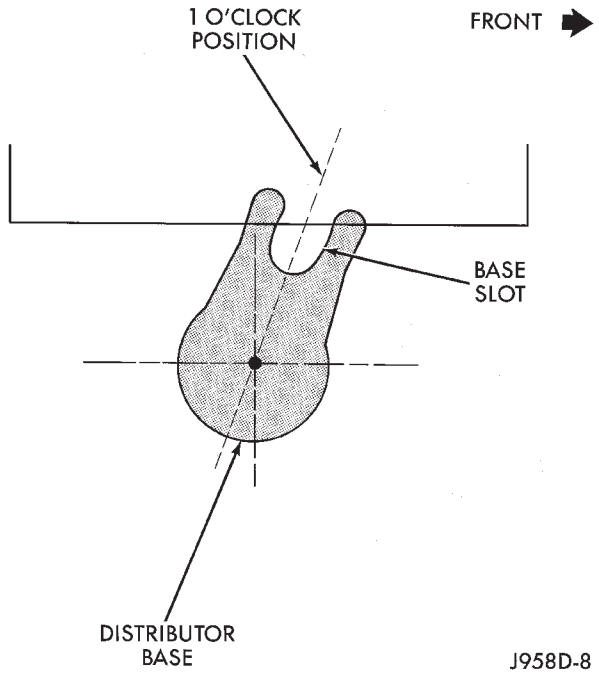

Fig. 13 Distributor Pre-position—All Engines

The distributor is correctly installed when:

- the rotor is pointed at the 3 o'clock position (2.5L engine), or at the 5 o'clock position (4.0L engine).
- the plastic alignment pin (or pin punch tool) is still installed to distributor.

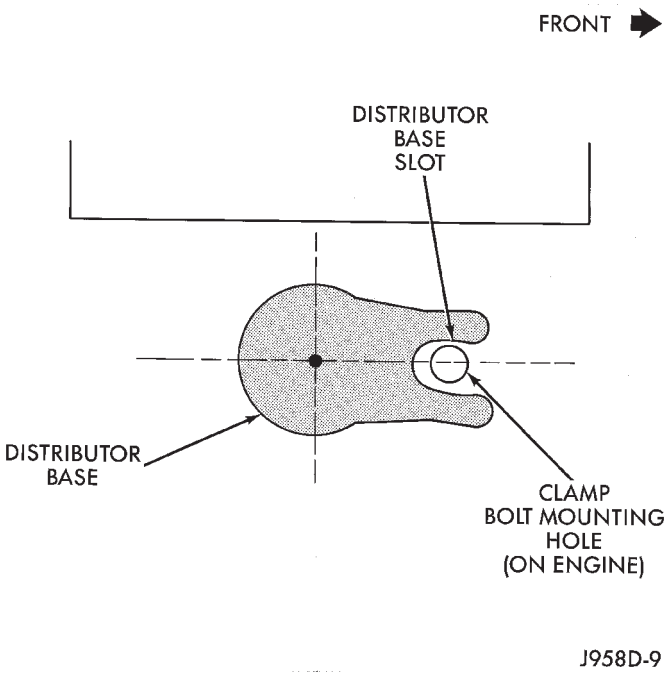

Fig. 14 Distributor Engaged Position—2.5L 4-Cylinder Engine

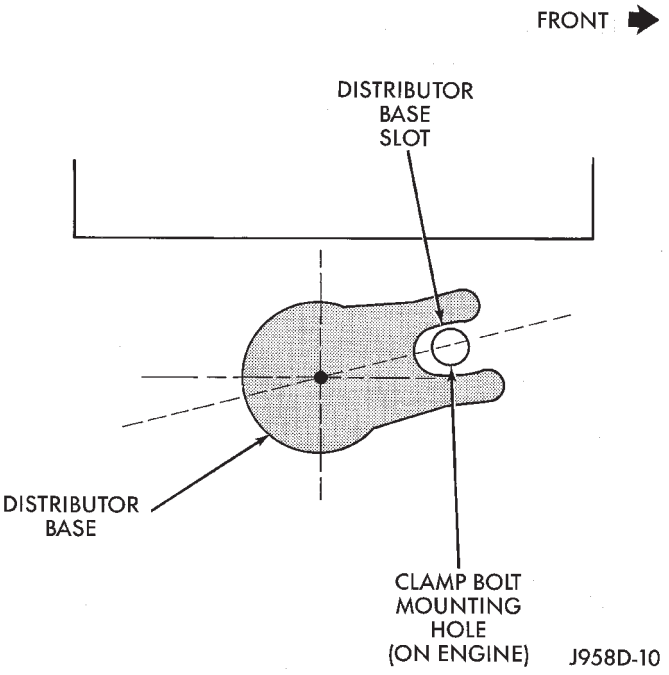

Fig. 15 Distributor Engaged Position—4.0L 6-Cylinder Engine

• the number 1 cylinder piston is set at top dead center (TDC) (compression stroke).
• the centerline of the slot at the base of the distributor is aligned to the centerline of the distributor holddown bolt hole on the engine. In this position, the holddown bolt should easily pass through the slot and into the engine.

No adjustments are necessary. Proceed to next step.

(12) Install the distributor holddown clamp and bolt. Tighten the bolt to 23 N·m (17 ft. lbs.) torque.

(13) Remove the pin punch tool from the distributor. Or, if the plastic alignment pin was used, remove it straight down from the bottom of the distributor. Discard plastic pin.

(14) If removed, install the camshaft position sensor to the distributor. Align the wiring harness grommet to the notch in the distributor housing.

(15) Install the rotor.

CAUTION: If the distributor cap is incorrectly positioned on distributor housing, the cap or rotor may be damaged when engine is started.

(16) Install the distributor cap. Tighten distributor cap holddown screws to 3 N·m (26 in. lbs.) torque.

(17) If removed, install the spark plug cables to the distributor cap. For proper firing order, refer to the Specifications section at the end of this group. See Engine Firing Order.

(18) Connect the distributor wiring harness to the main engine harness.

(19) Connect battery cable to battery.

IGNITION COIL

The ignition coil is an epoxy filled type. If the coil is replaced, it must be replaced with the same type.

REMOVAL

On the 2.5L 4-cylinder engine, the ignition coil is mounted to a bracket on the side of the engine (to the rear of the distributor).

On the 4.0L 6-cylinder engine, the ignition coil is mounted to a bracket on the side of the engine (to the front of the distributor) (Fig. 16).

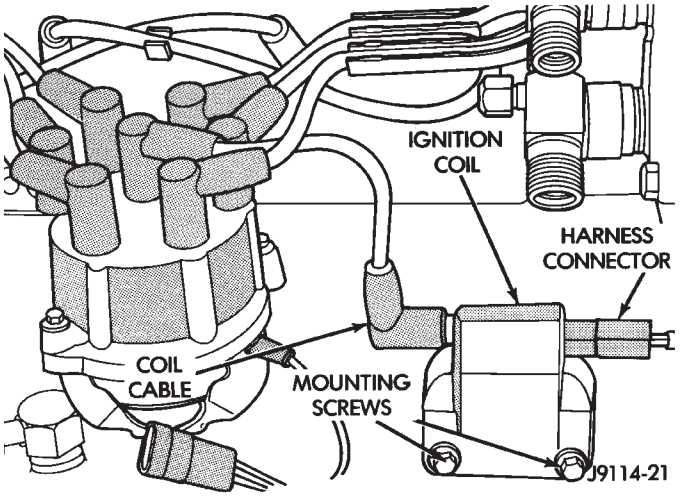

Fig. 16 Ignition Coil—Typical (4.0L Shown)

(1) Disconnect the ignition coil secondary cable from ignition coil (Fig. 16).

(2) Disconnect engine harness connector from ignition coil.

(3) Remove ignition coil mounting bolts (nuts are used on back side of bracket). Remove coil.

INSTALLATION

(1) Install ignition coil to bracket on cylinder block with mounting bolts and nuts.
(2) Connect engine harness connector to coil.
(3) Connect ignition coil cable to ignition coil.

INTAKE MANIFOLD AIR TEMPERATURE SENSOR

For an operational description, diagnosis or removal/ installation procedures, refer to Group 14, Fuel Systems.

MANIFOLD ABSOLUTE PRESSURE (MAP) SENSOR

For an operational description, diagnosis and removal/installation procedures, refer to Group 14, Fuel System.

OXYGEN (O2S) SENSOR

For an operational description, diagnosis or removal/ installation procedures, refer to Group 14, Fuel Systems.

POWERTRAIN CONTROL MODULE (PCM)

The PCM was formerly referred to as the SBEC or engine controller.

XJ MODELS

On XJ models, the PCM is located in the engine compartment next to the air cleaner (Fig. 17).

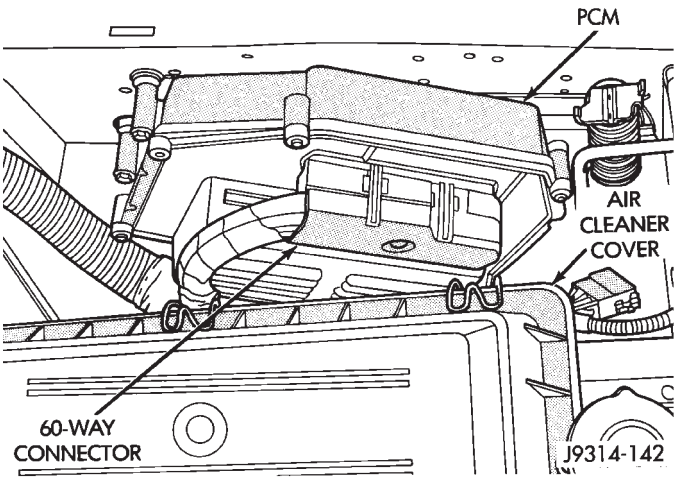

Fig. 17 PCM Location—XJ Models

REMOVAL

(1) Disconnect negative battery cable at battery.
(2) Loosen 60-way connector mounting screw until connector can be disengaged from PCM.
(3) Pull 60-way connector straight back from PCM.
(4) Remove PCM mounting bolts.
(5) Remove PCM from vehicle.

INSTALLATION

(1) Check the pins in the PCM 60-way electrical connector for damage. Repair as necessary.
(2) Install PCM. Tighten mounting bolts to 1 N·m (9 in. lbs.) torque.
(3) Engage 60-way connector into PCM. Tighten connector mounting screw to 4 N·m (35 in. lbs.) torque.
(4) Connect battery cable to battery.

YJ MODELS

On YJ models, the PCM is located in the engine compartment behind the windshield washer fluid reservoir (Fig. 18).

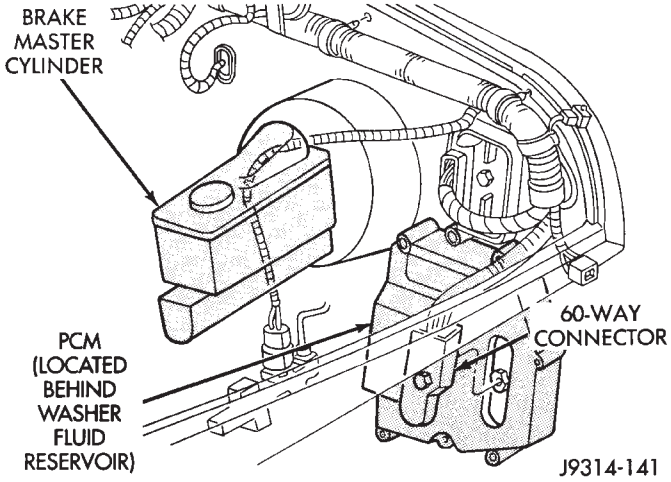

Fig. 18 PCM Location—YJ Models

REMOVAL

(1) Disconnect negative battery cable at battery.
(2) Remove windshield washer fluid reservoir.
(3) Loosen 60-way connector mounting screw until connector can be disengaged from PCM.
(4) Pull 60-way connector straight back from PCM.
(5) Remove PCM mounting bolts.
(6) Remove PCM from vehicle.

INSTALLATION

(1) Check the pins in the PCM 60-way electrical connector for damage. Repair as necessary.
(2) Install PCM. Tighten mounting bolts to 1 N·m (9 in. lbs.) torque.
(3) Engage 60-way connector into PCM. Tighten connector mounting screw to 4 N·m (35 in. lbs.) torque.
(4) Connect battery cable to battery.
(5) Install washer fluid reservoir.

SPARK PLUGS

PLUG REMOVAL

(1) Always remove spark plug or ignition coil cables by grasping at the cable boot (Fig. 19). Turn the cable boot 1/2 turn and pull straight back in a steady

motion. Never pull directly on the cable. Internal damage to cable will result.

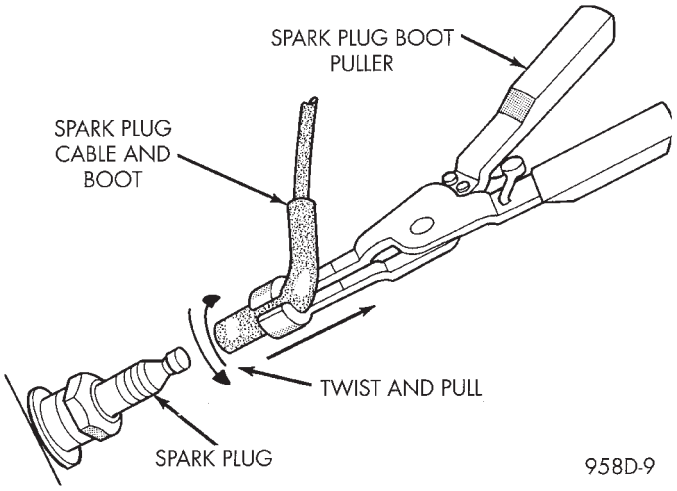

Fig. 19 Cable Removal

(2) Prior to removing the spark plug, spray compressed air around the spark plug hole and the area around the spark plug. This will help prevent foreign material from entering the combustion chamber.

(3) Remove the spark plug using a quality socket with a rubber or foam insert.

(4) Inspect the spark plug condition. Refer to Spark Plugs in the Diagnostics/Service Procedures section of this group.

PLUG CLEANING

The plugs may be cleaned using commercially available spark plug cleaning equipment. After cleaning, file the center electrode flat with a small point file or jewelers file before adjusting gap.

CAUTION: Never use a motorized wire wheel brush to clean the spark plugs. Metallic deposits will remain on the spark plug insulator and will cause plug misfire.

PLUG GAP ADJUSTMENT

Check the spark plug gap with a gap gauge tool. If the gap is not correct, adjust it by bending the ground electrode (Fig. 20). **Never attempt to adjust the gap by bending the center electrode.**

SPARK PLUG GAP

- 2.5L 4-Cylinder Engine Spark Plug Gap: .89 mm (.035 in).
- 4.0L 6-Cylinder Engine Spark Plug Gap: .89 mm (.035 in).

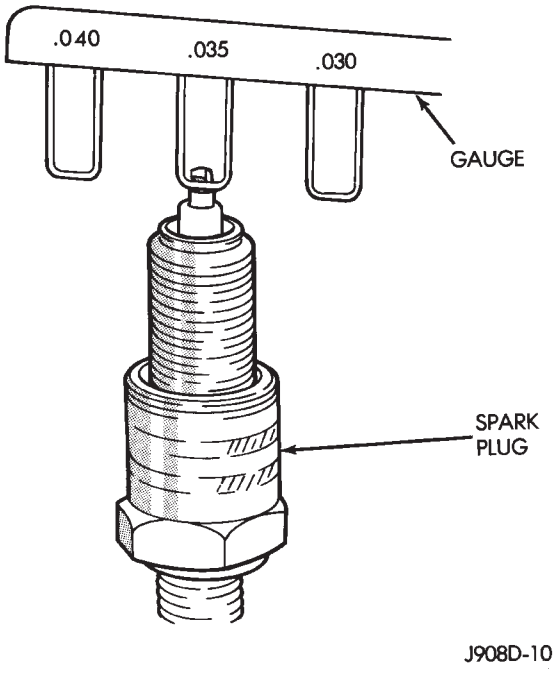

Fig. 20 Setting Spark Plug Gap—Typical

PLUG INSTALLATION

Always tighten spark plugs to the specified torque. Over tightening can cause distortion. This may result in a change in the spark plug gap, or a cracked porcelain insulator.

When replacing the spark plug and ignition coil cables, route the cables correctly and secure them in the appropriate retainers. Failure to route the cables properly can cause the radio to reproduce ignition noise. It could cause cross ignition of the spark plugs, or short circuit the cables to ground.

(1) Start the spark plug into the cylinder head by hand to avoid cross threading.

(2) Tighten the spark plugs to 35-41 N·m (26-30 ft. lbs.) torque.

(3) Install spark plug cables over spark plugs.

SPARK PLUG SECONDARY CABLES

CAUTION: When disconnecting a high voltage cable from a spark plug or from the distributor cap, twist the rubber boot slightly (1/2 turn) to break it loose (Fig. 19). Grasp the boot (not the cable) and pull it off with a steady, even force.

Install cables into the proper engine cylinder firing order (Figs. 21 or 22).

When replacing the spark plug and coil cables, route the cables correctly and secure in the proper retainers. Failure to route the cables properly can cause the radio to reproduce ignition noise. It could also cause cross ignition of the plugs, or short circuit the cables to ground.

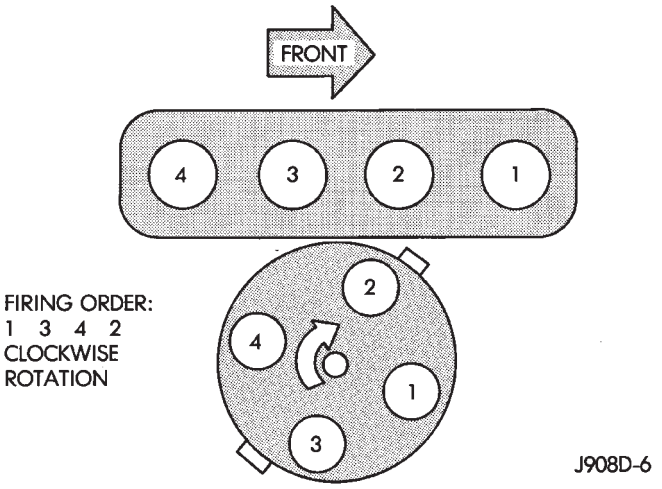

Fig. 21 Engine Firing Order—2.5L 4-Cylinder Engine

When installing new cables, make sure a positive connection is made. A snap should be felt when a good connection is made between the plug cable and the distributor cap tower.

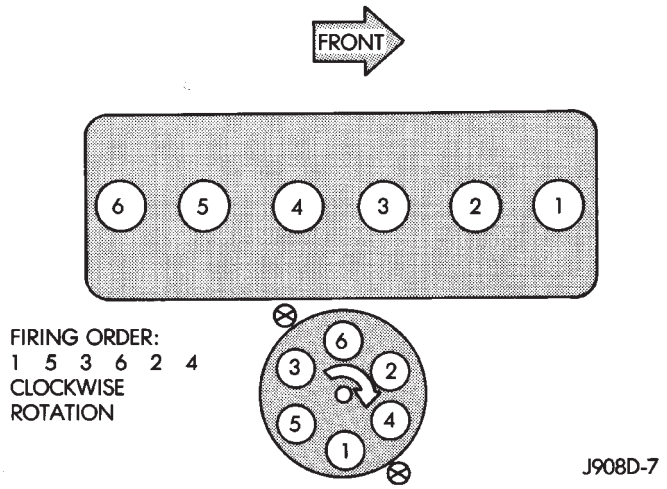

Fig. 22 Engine Firing Order—4.0L 6-Cylinder Engine

THROTTLE POSITION SENSOR (TPS)

For an operational description, diagnosis and removal/installation procedures, refer to Group 14, Fuel System.

IGNITION SWITCH—XJ MODELS

IGNITION SWITCH AND KEY CYLINDER SERVICE

The ignition switch is located on the steering column. The Key-In-Switch and Halo Light are integral with the ignition switch. Refer to Group 8U for Key-In-Switch and Halo Light diagnosis for XJ models.

Refer to Group 8W, Wiring for ignition switch wiring circuits.

REMOVAL

(1) Disconnect negative battery cable from battery.

(2) If vehicle has a tilt column, remove tilt lever by turning it counterclockwise.

(3) Remove upper and lower covers from steering column (Fig. 1).

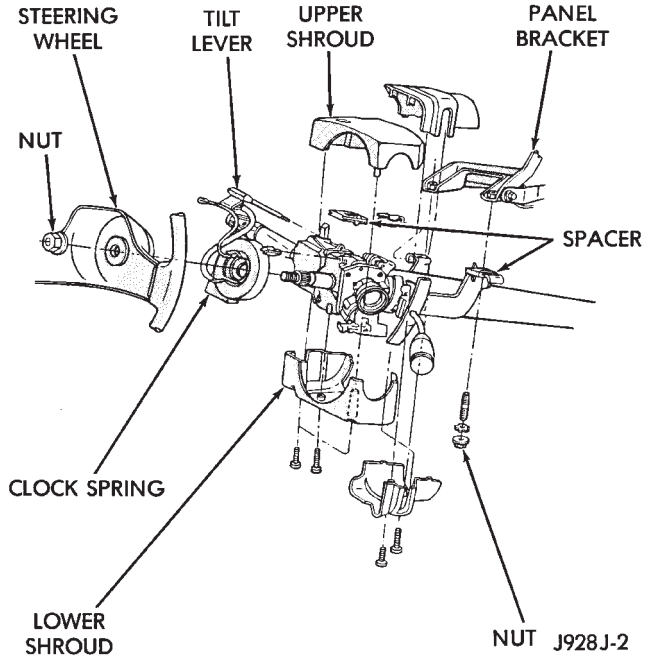

Fig. 1 Shroud Removal/Installation—Typical

(4) Remove ignition switch mounting screws. Use tamper proof torx bit Snap-on TTXR20A2 or equivalent to remove the screws (Fig. 2 or 3).

(5) Gently pull switch away from column. Release connector locks on 7-terminal wiring connector, then remove connector from ignition switch.

(6) Release connector lock on 4-terminal connector, then remove connector from ignition switch (Fig. 4).

(7) To remove key cylinder from ignition switch:

(a) Insert key in ignition switch. Turn key to LOCK position. Using a TTXR20A2 or equivalent torx bit, remove key cylinder retaining screw and bracket (Fig. 5 or 6).

(b) Rotate key clockwise to the OFF position. Key cylinder will unseat from ignition switch (Fig. 7). When key cylinder is unseated, it will be approximately 1/8 inch away from ignition switch halo light ring. **Do not attempt to remove key cylinder at this time.**

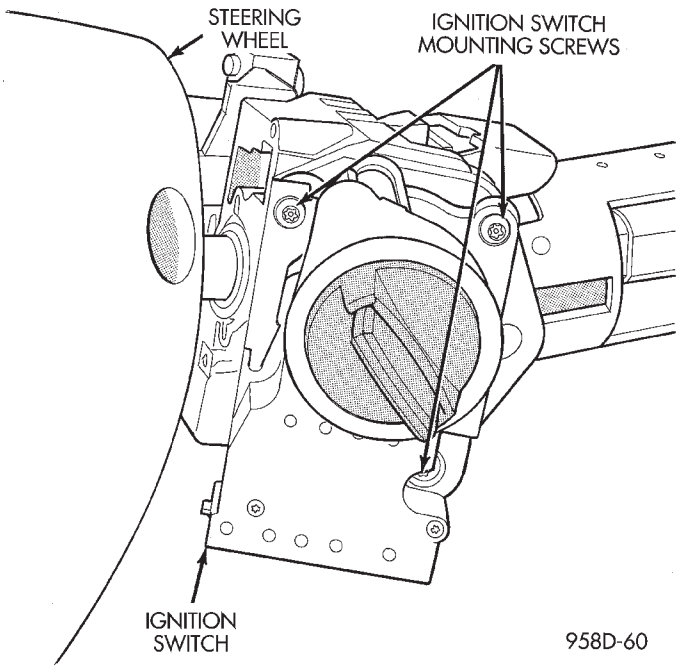

Fig. 2 Ignition Switch Screw Removal

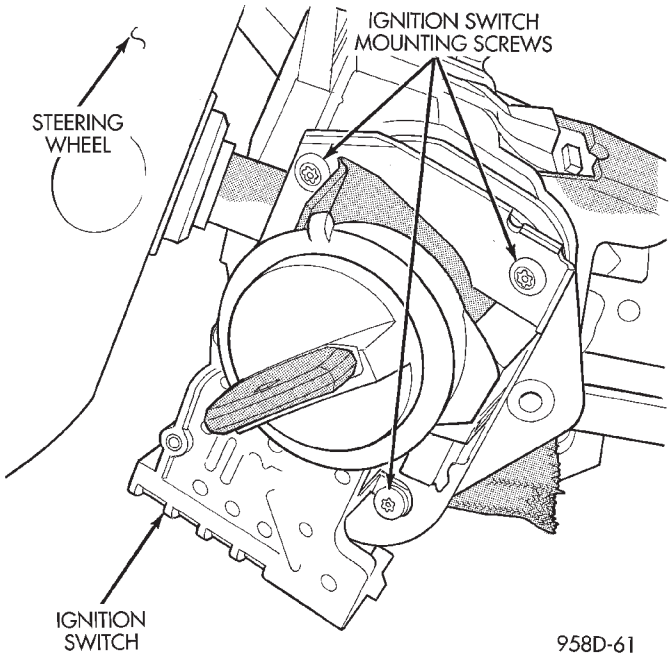

Fig. 3 Ignition Switch Screw Removal

(c) With key cylinder in unseated position, rotate key counterclockwise to the lock position and remove key.

(d) Remove key cylinder from ignition switch (Fig. 8).

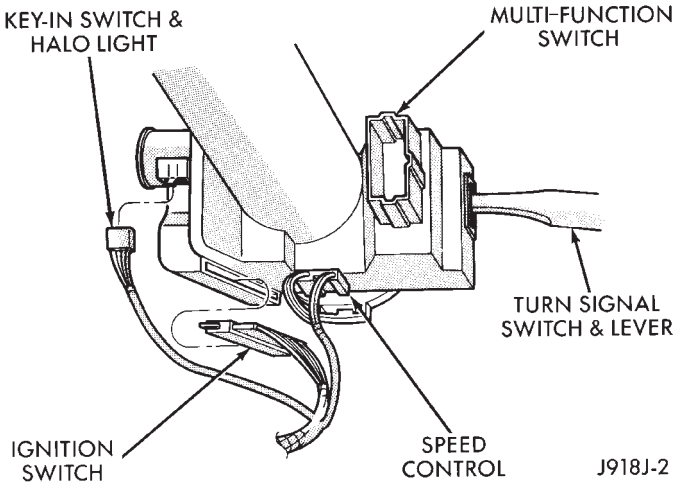

Fig. 4 Key-In-Switch and Halo Lamp Connector

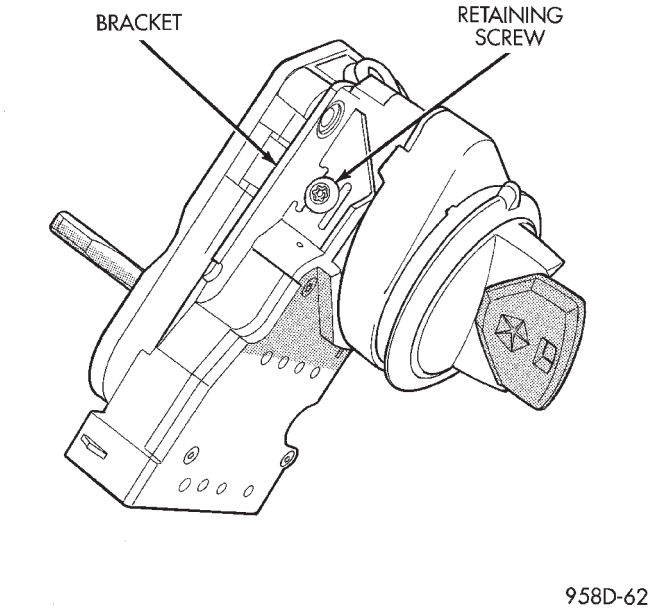

Fig. 5 Key Cylinder Retaining Screw

INSTALLATION

(1) Connect electrical connectors to ignition switch. Make sure that switch locking tabs are fully seated in wiring connectors.

(2) Before attaching ignition switch to a tilt steering column, the transmission shifter must be in Park position. The park lock dowel pin and column lock flag must also be properly indexed before installing switch (Fig. 9).

(a) Place transmission shifter in PARK position.

(b) Place ignition switch in lock position. The switch is in the lock position when column lock flag is parallel to ignition switch terminals (Fig. 9).

(c) Position ignition switch park lock dowel pin so it will engage steering column park lock slider linkage (Fig. 10).

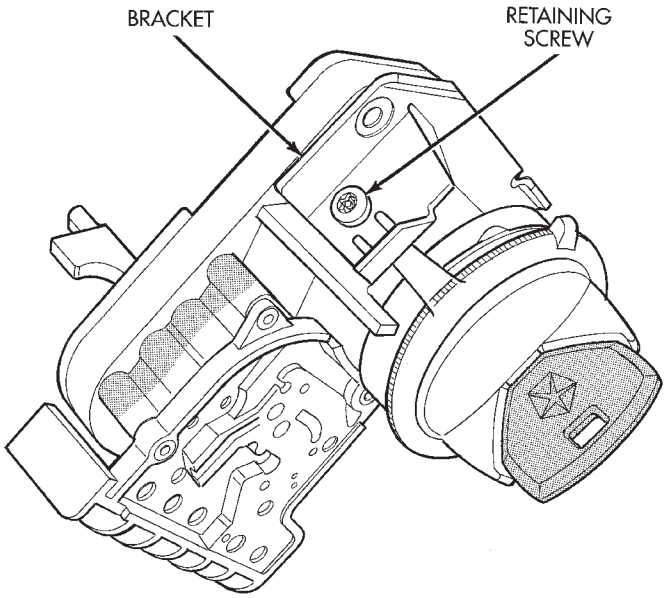

Fig. 6 Key Cylinder Retaining Screw

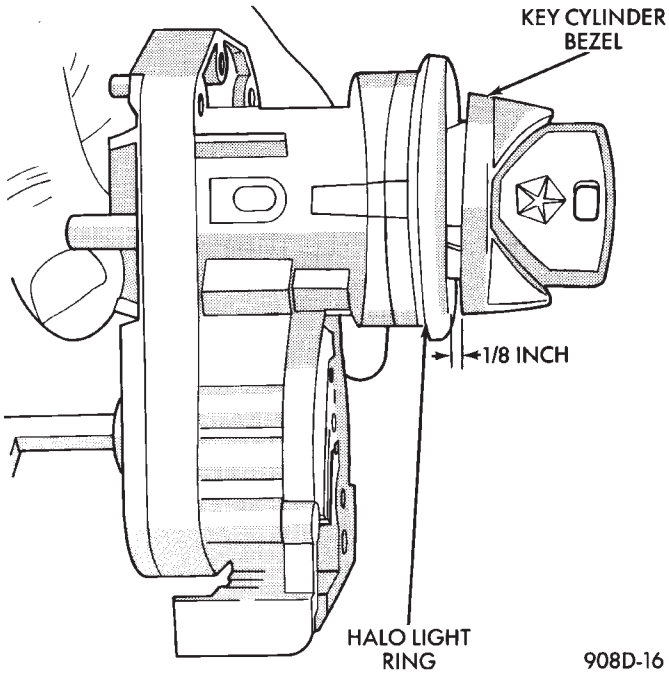

Fig. 7 Unseated Key Cylinder

(d) Apply a light coating of grease to column lock flag and park lock dowel pin.

(3) Place ignition switch against lock housing opening on steering column. Ensure that ignition switch park lock dowel pin enters slot in park lock slider linkage in steering column.

(4) Install retaining bracket and ignition switch mounting screws. Tighten screws to 3±.5 N·m (26±4 in. lbs.) torque.

(5) Install ignition lock cylinder:

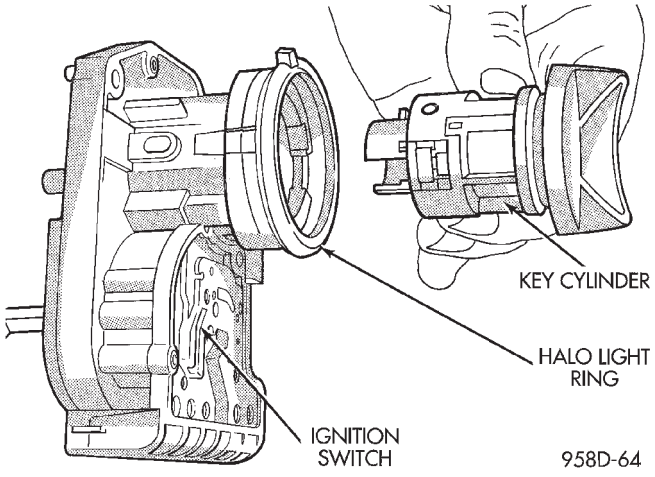

Fig. 8 Key Cylinder Removal

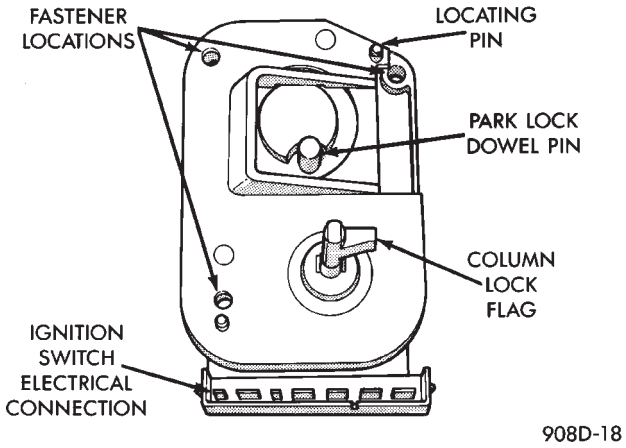

Fig. 9 Ignition Switch View From Column

(a) With lock cylinder and ignition switch in Lock position, insert lock cylinder into ignition switch until it bottoms.

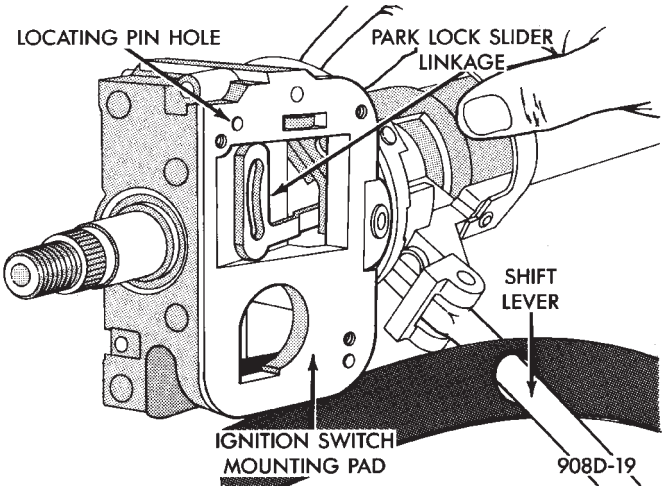

Fig. 10 Ignition Switch Mounting Pad

(b) Insert ignition key into lock cylinder. While gently pushing lock cylinder in toward ignition switch, rotate ignition key to end of travel.

(6) Install retaining screw into bracket and lock cylinder. Tighten screw to 3±.5 N·m (26±4 in. lbs.) torque.

(7) Install steering column covers. Tighten screws to 2 N·m (17 in. lbs.) torque.

(8) If vehicle is equipped with a tilt steering column, install tilt lever.

(9) Connect negative cable to battery.

(10) Check for proper operation of halo light, shift lock (if applicable), and column lock. Also check for proper operation of ignition switch accessory, lock, off, run, and start positions.

IGNITION SWITCH—YJ MODELS

GENERAL INFORMATION

This section will cover the electrical portion of the ignition switch. To service the mechanical ignition key switch, refer to Group 19, Steering.

Refer to Group 8W, Wiring for ignition switch wiring circuits.

The ignition switch is mounted under the instrument panel on the lower section of the steering column. The headlamp dimmer switch is mounted beside the ignition switch (Fig. 11). Both of these switches (ignition and dimmer) share the same mounting screws.

The switch is connected to the ignition key lock assembly by a remote actuator rod. This remote actuator rod fits into an access hole on the bottom of the ignition switch (Fig. 12).

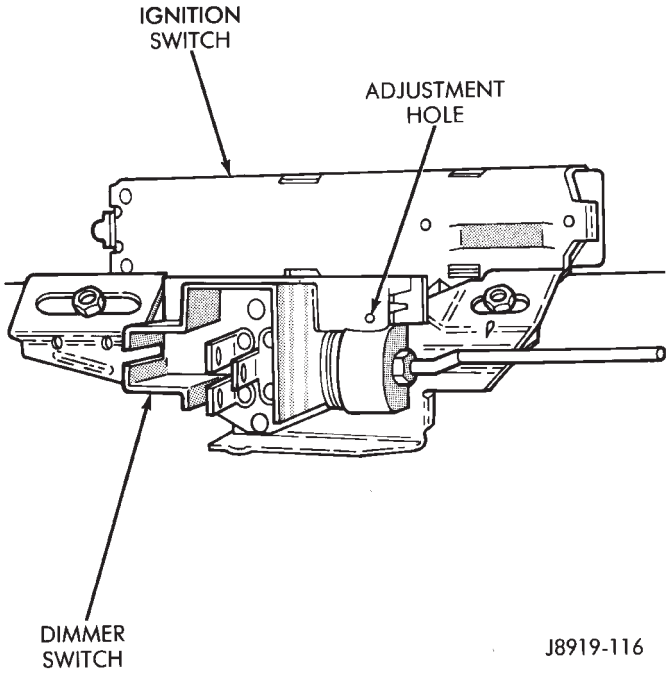

Fig. 11 Ignition Switch/Headlamp Dimmer Switch—Typical

REMOVAL

(1) Disconnect the negative battery cable at the battery.

(2) Remove the windshield wiper intermittent control module and its bracket (if equipped).

(3) Place the ignition key lock in ACCESSORY position.

(4) Remove the two headlamp dimmer switch attaching nuts. Lift the switch from steering column while disengaging actuator rod.

Before removing dimmer switch, tape the two remote control actuator rods (ignition switch and dimmer) to the steering column. This will prevent accidental disengagement from the upper part of the steering column.

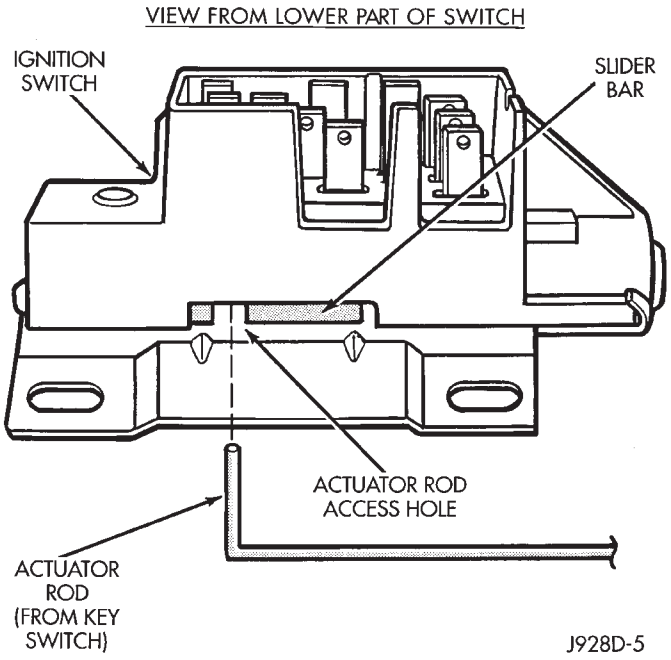

Fig. 12 Ignition Switch/Remote Actuator Rod—Typical

(5) Remove the ignition switch-to-steering column attaching screws.

(6) Disengage the ignition switch from the remote actuator rod by lifting straight up. Remove switch from steering column.

(7) Remove wiring from switch as follows:

Two electrical connectors are used to connect all wiring to the ignition switch. One of the connectors is installed (interlocked) over the top of the other connector. Remove wiring from switch by disconnecting the (black) harness connector first and then the other connector. Remove the switch from the vehicle.

SWITCH TESTING

To test the ignition switch circuity and continuity, proceed as follows. Place the slide bar (on the ignition switch) (Fig. 12) into the detent position to be tested. An ohmmeter or continuity light may be used to check switch continuity. Refer to the Ignition Switch Continuity Tests chart for continuity tests. Refer to (Fig. 13) for the lettered/numbered terminal positions. **All wiring must be disconnected from the ignition switch before performing any continuity testing.**

There are five positions on the ignition switch. The switch positions (in order) are: ACCESSORY, OFF-LOCK, OFF, ON AND START (Figs. 14 or 15). Each position has a detent stop (except START), which is

spring loaded to release when the key is released.

The maximum voltage drop between any two connected terminals should not exceed 12.5 millivolts per amp. For example: If a 10 amp load is drawn through the switch, maximum voltage drop should be 10 x 0.0125 or 0.125 volt.

IGNITION SWITCH CONTINUITY TESTS

SWITCH DETENT POSITION	NORMAL CIRCUIT CONTINUITY
START	Between I-1, B-1 and S. G-1 and G-2 to switch case (ground).
ON	Between I-1, A, I-3 to B-1, B-2 and B-3.
OFF	Between B-1, B-2 and B-3 only.
OFF-LOCK	Between B-1, B-2 and B-3 only.
ACCESS.	Between A and B-2.
Note: Circuits B-1, B-2 and B-3 are commonly connected and will show continuity at all times.	

J928D-7

INSTALLATION/ADJUSTMENT

(1) Place the key lock switch in the ACCESSORY position.

(2) Place the slider bar (in the ignition switch) (Fig. 12) into the ACCESSORY detent position.

(3) Connect the wiring to the switch as follows: Install the non-black (colored) connector first and then the black (colored) connector to the ignition switch. One connector will interlock the other connector.

(4) Slip the remote actuator rod into the access hole on the switch (Fig. 12). Install the switch to the steering column. Be careful not to move the slider bar (on the switch) out of the ACCESSORY detent position. Remove the ignition switch actuator rod securing-tape from steering column.

(5) Install the two ignition switch-to-steering column screws finger tight. **Do not tighten screws at this time.**

(6) Adjust ignition switch as follows:

(a) Non-tilt steering column: While holding key lock switch in ACCESSORY position, gently slide ignition switch **up** (towards steering wheel). This will remove slack from switch. Tighten attaching screws. Do not allow the ignition switch to move from the ACCESSORY detent position.

(b) Tilt steering column: While holding the key lock switch in the ACCESSORY position, gently slide the ignition switch **down** (away from steering wheel) to remove slack from switch. Tighten attaching screws. Do not allow the ignition switch to move from the ACCESSORY detent position.

Because the ignition switch and the headlamp dimmer switch share the same two mounting screws, one of the screws must be removed from the ignition switch. This must be done **after** the ignition switch has been adjusted and **before** the dimmer switch has been installed. Remove one screw. **Do not** remove the stud/nut.

(7) Install the headlamp dimmer switch as follows: Slip switch into actuator rod and position over the ig-

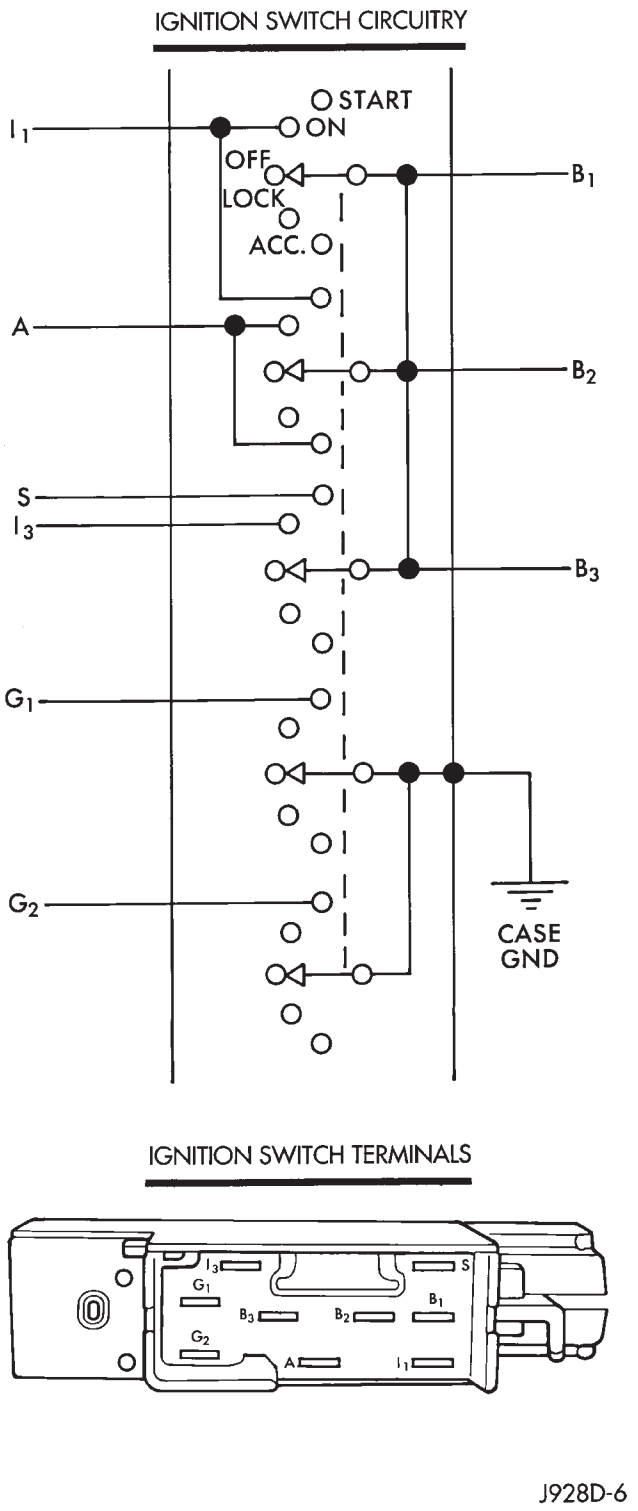

Fig. 13 Ignition Switch Terminals/Circuits

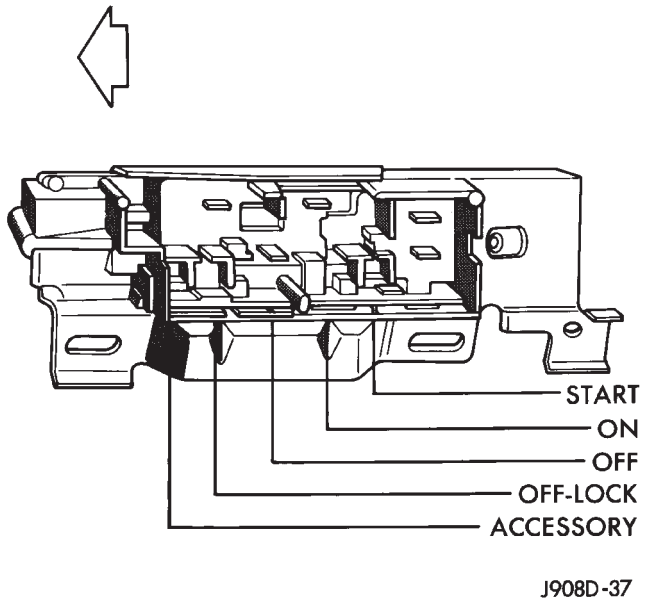

Fig. 14 Detent Positions—Non-Tilt Steering Column

nition switch. Install screws finger tight. Remove the dimmer switch actuator rod securing-tape from steering column.

(8) Adjust dimmer switch as follows: Depress the switch slightly and insert a 3/32-inch drill bit into the adjustment hole (Fig. 11). This is done to prevent horizontal switch movement.

(9) Move switch toward steering wheel to remove any lash from switch actuator rod. Tighten dimmer and ignition switch fasteners to 4 N·m (35 in. lbs.) torque.

(10) Install the windshield wiper intermittent control module and its bracket (if equipped).

(11) Install the negative battery cable.

Test dimmer switch. Test ignition switch operation in all switch positions. If equipped with a tilt steering column, test operation of dimmer switch and ignition switch in all tilt positions.

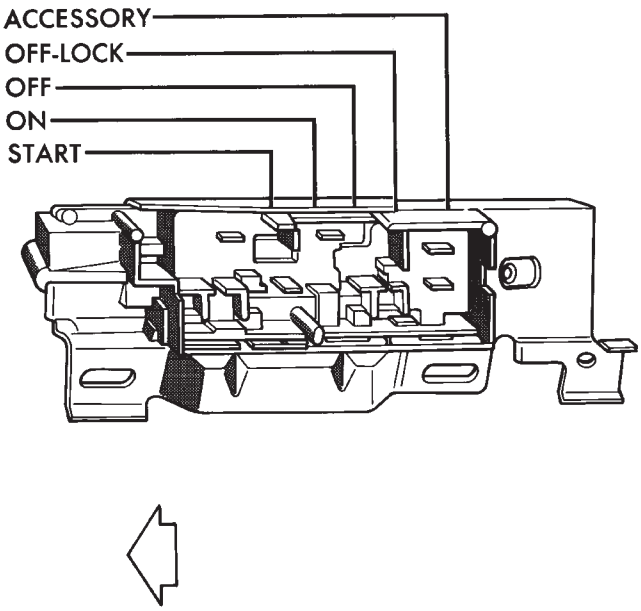

Fig. 15 Detent Positions—Tilt Steering Column

SPECIFICATIONS

GENERAL INFORMATION

The following specifications are published from the latest information available at the time of publication. **If anything differs between the specifications found on the Vehicle Emission Control Information (VECI) label and the following specifications, use specifications on VECI label.** The VECI label is located in the engine compartment.

SPARK PLUGS

ENGINE	PLUG TYPE	ELECTRODE GAP
2.5L/4.0L	RC12LYC	0.89 mm (0.035 in.)

J928D-12

ENGINE FIRING ORDER—2.5L 4-CYLINDER ENGINE

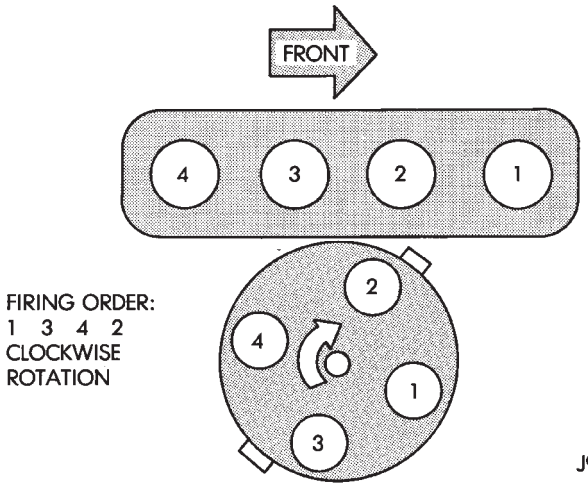

J908D-6

ENGINE FIRING ORDER—4.0L 6-CYLINDER ENGINE

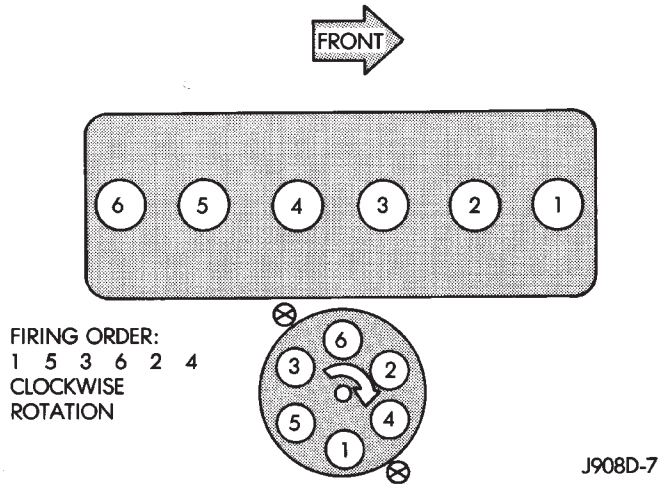

J908D-7

TORQUE

DESCRIPTION	TORQUE
Coolant Temperature Sensor	28 N·m (21 ft. lbs.)
Crankshaft Position Sensor	19 N·m (15 ft. lbs.)
Distributor Hold Down Bolt	23 N·m (17 ft. lbs.)
PCM Mounting Screws	1 N·m (9 in. lbs.)
PCM 60-Way Electrical Connector	4 N·m (35 in. lbs.)
Headlamp Dimmer Switch/Ignition Switch Mounting Screws/Nuts	4 N·m (35 in. lbs.)
Intake Manifold Air Temperature Sensor	28 N·m (20 ft. lbs.)
Oxygen Sensor	30 N·m (22 ft. lbs.)
Spark Plugs-All Engines	37 N·m (27 ft. lbs.)

J948D-22

INSTRUMENT PANEL AND GAUGES

GROUP INDEX

INSTRUMENT PANEL AND GAUGES—XJ 1
INSTRUMENT PANEL AND GAUGES—YJ 24

INSTRUMENT PANEL AND GAUGES—XJ

CONTENTS

page

DIAGNOSIS 5
GENERAL INFORMATION 1
SERVICE PROCEDURES 17
SPECIFICATIONS 23

GENERAL INFORMATION

Following are general descriptions of major instrument panel components. Refer to Group 8W - Wiring Diagrams for complete circuit descriptions and diagrams.

INSTRUMENT PANEL

Modular instrument panel construction allows all gauges and controls to be serviced from the front of the panel. In addition, most instrument panel wiring or heater and air conditioning components can be accessed without complete instrument panel removal. If necessary, the instrument panel can be rolled-down and removed from the vehicle as an assembly.

Removal of the instrument cluster bezel allows access to the cluster assembly, most switches, the climate controls, and the radio. Removal of the cluster assembly allows access to the individual gauges, illumination and indicator lamp bulbs, printed circuits, and most wiring.

Removal of the lower instrument panel allows access to heater and air conditioning components, the fuseblock module, the relay center, and other wiring and electrical components. Those models equipped with a driver's-side airbag restraint have a knee blocker and reinforcement behind the driver's-side lower instrument panel.

The instrument panel layout is mirror image for left-hand and right-hand drive vehicles. In most cases, the diagnosis and service procedures found in this group are applicable to either vehicle. Although, most illustrations represent only the typical left-hand drive version. Exceptions are clearly identified as Right-Hand Drive (RHD).

INSTRUMENT CLUSTERS

Two basic instrument cluster options are offered on XJ (Cherokee) models. One is referred to as a low-line cluster, and the other is referred to as a high-line cluster. Each cluster is divided into two areas: the gauge area, and the tell-tale area. Each area is served by a separate printed circuit and wiring connector. Some variations of each cluster exist due to optional equipment and regulatory requirements.

The low-line cluster includes the following gauges:

- fuel gauge
- speedometer/odometer.

The low-line cluster includes provisions for the following indicator lamps:

- anti-lock brake system lamp
- brake warning lamp
- coolant temperature warning lamp
- four-wheel drive indicator lamps
- generator warning lamp
- headlamp high beam indicator lamp
- low oil pressure warning lamp
- low washer fluid warning lamp
- malfunction indicator (Check Engine) lamp
- seat belt reminder lamp
- turn signal indicator lamps
- upshift indicator lamp.

The high-line cluster includes the following gauges:
- coolant temperature gauge
- fuel gauge
- oil pressure gauge
- speedometer/odometer
- tachometer
- trip odometer
- voltmeter.

The high-line cluster includes provisions for the following indicator lamps:
- anti-lock brake system lamp
- brake warning lamp
- four-wheel drive indicator lamps
- headlamp high beam indicator lamp
- low fuel warning lamp
- low washer fluid warning lamp
- malfunction indicator (Check Engine) lamp
- seat belt reminder lamp
- turn signal indicator lamps
- upshift indicator lamp.

GAUGES

With the ignition switch in the ON or START position, voltage is supplied to all gauges through the instrument cluster gauge area printed circuit. With the ignition switch in the OFF position, voltage is not supplied to the gauges. A gauge pointer may remain within the gauge scale after the ignition switch is OFF. However, the gauges do not accurately indicate any vehicle condition unless the ignition switch is ON.

All gauges except the odometer are air core magnetic units. Two fixed electromagnetic coils are located within the gauge. These coils are wrapped at right angles to each other around a movable permanent magnet. The movable magnet is suspended within the coils on one end of a shaft. The gauge needle is attached to the other end of the shaft.

One of the coils has a fixed current flowing through it to maintain a constant magnetic field strength. Current flow through the second coil changes, which causes changes in its magnetic field strength. The current flowing through the second coil can be changed by:
- a variable resistor-type sending unit (fuel level, coolant temperature, or oil pressure)
- changes in electrical system voltage (voltmeter)
- electronic control circuitry (speedometer/odometer, tachometer).

The gauge needle moves as the movable permanent magnet aligns itself to the changing magnetic fields created around it by the electromagnets.

COOLANT TEMPERATURE GAUGE

The coolant temperature gauge gives an indication of engine coolant temperature. The coolant temperature sending unit is a thermistor that changes electrical resistance with changes in engine coolant temperature. High sending unit resistance causes low coolant temperature readings. Low resistance causes high coolant temperature readings.

The gauge will read at the high end of the scale when the ignition switch is turned to the START position. This is caused by the bulb test circuit wiring provision. The same wiring is used for the high-line cluster with a coolant temperature gauge and the low-line cluster with a coolant temperature warning lamp. Sending unit resistance values are shown in a chart in Specifications.

FUEL GAUGE

The fuel gauge gives an indication of the level of fuel in the fuel tank. The fuel gauge sending unit has a float attached to a swing-arm in the fuel tank. The float moves up or down within the fuel tank as fuel level changes. As the float moves, an electrical contact on the swing-arm wipes across a resistor coil, which changes sending unit resistance. High sending unit resistance causes low fuel level readings. Low resistance causes high fuel level readings. Sending unit resistance values are shown in a chart in Specifications.

OIL PRESSURE GAUGE

The oil pressure gauge gives an indication of engine oil pressure. The combination oil pressure sending unit contains a flexible diaphragm. The diaphragm moves in response to changes in engine oil pressure. As the diaphragm moves, sending unit resistance increases or decreases. High resistance on the gauge side of the sending unit causes high oil pressure readings. Low resistance causes low oil pressure readings. Sending unit resistance values are shown in a chart in Specifications.

SPEEDOMETER/ODOMETER

The speedometer/odometer gives an indication of vehicle speed and travel distance. The speedometer receives a vehicle speed pulse signal from the Vehicle Speed Sensor (VSS). An electronic integrated circuit contained within the speedometer reads and analyzes the pulse signal. It then adjusts the ground path resistance of one electromagnet in the gauge to control needle movement. It also sends signals to an electric stepper motor to control movement of the odometer number rolls. Frequency values for the pulse signal are shown in a chart in Specifications.

The VSS is mounted to an adapter near the transmission (two-wheel drive) or transfer case (four-wheel drive) output shaft. The sensor is driven through the adapter by a speedometer pinion gear. The adapter and pinion vary with transmission, transfer case, axle ratio and tire size. Refer to Group 21 - Transmission and Transfer Case for more information.

TACHOMETER

The tachometer gives an indication of engine speed in Revolutions-Per-Minute (RPM). With the engine running, the tachometer receives an engine speed pulse signal from the Powertrain Control Module (PCM). An electronic integrated circuit contained within the tachometer reads and analyzes the pulse signal. It then adjusts the ground path resistance of one electromagnet in the gauge to control needle movement. Frequency values for the pulse signal are shown in a chart in Specifications.

TRIP ODOMETER

The trip odometer is driven by the same electronic integrated circuit as the speedometer/odometer. However, by depressing the trip odometer reset knob on the face of the speedometer, the trip odometer can be reset to zero. The trip odometer is serviced only as a part of the speedometer/odometer gauge assembly.

VOLTMETER

The voltmeter is connected in parallel with the battery. With the ignition switch ON, the voltmeter indicates battery or generator output voltage, whichever is greater.

INDICATOR LAMPS

Indicator lamps are located in two areas within the cluster. Each of these areas is served by a separate printed circuit and cluster connector. Those lamps in the gauge area of the cluster share the gauge area printed circuit and cluster connector A. Those lamps in the tell-tale area of the cluster use the tell-tale printed circuit and cluster (tell-tale) connector B.

Up to ten indicator lamps can be found in the tell-tale area of the cluster. These lamps are arranged in five stacked rows with two lamps in each row, located to the driver's side of the main cluster.

ANTI-LOCK BRAKE SYSTEM LAMP

The Anti-Lock Brake System (ABS) lamp is switched to ground by the ABS module. The module lights the lamp when the ignition switch is turned to the START position as a bulb test. The lamp will stay on for 3 to 5 seconds after vehicle start-up to indicate a system self-test is in process. If the lamp remains on after start-up, or comes on and stays on while driving, it may indicate that the ABS module has detected a system malfunction or that the system has become inoperative. Refer to Group 5 - Brakes for more information.

BRAKE WARNING LAMP

The brake warning lamp warns the driver that the parking brake is applied or that the pressures in the two halves of the split brake hydraulic system are unequal. With the ignition switch turned ON, battery voltage is supplied to one side of the indicator bulb. A ground path for the bulb is provided by 3 switches. The bulb will light when:

- the brake warning switch is closed (indicating unequal brake system hydraulic pressures possibly due to brake fluid leakage)
- the ignition switch is in the START position (bulb test)
- the parking brake switch is closed (parking brake is applied).

Refer to Group 5 - Brakes for more information.

COOLANT TEMPERATURE WARNING LAMP

The coolant temperature warning lamp lights whenever engine coolant temperature is too high. Battery voltage is supplied to one side of the indicator bulb when the ignition switch is turned ON. The normally open coolant temperature switch is connected to the other side of the bulb. When coolant temperature is too high, the switch closes. This provides a ground path for the indicator bulb, which causes it to light. The lamp is also grounded and should light with the ignition switch in the START position as a bulb test.

FOUR-WHEEL DRIVE INDICATOR LAMPS

PART TIME

On vehicles with Command-Trac 4WD, the Part Time lamp lights when the transfer case is engaged in the 4H or 4L position. On vehicles with Selec-Trac 4WD, the Part Time lamp lights when the transfer case is engaged in the 4 X 4 PART TIME or 4 LO position. Voltage is supplied to one side of the indicator bulb. A switch in the transfer case is connected to the other side of the indicator bulb. When the switch is closed, a path to ground is provided and the indicator bulb lights.

FULL TIME

The Full Time lamp is only operational on vehicles equipped with Selec-Trac 4WD. The Full Time lamp lights when the transfer case is engaged in the 4 X 4 Full Time position. Voltage is supplied to one side of the indicator bulb. A switch in the transfer case is connected to the other side of the indicator bulb. When the switch is closed, a path to ground is provided and the indicator bulb lights.

GENERATOR WARNING LAMP

The generator warning lamp lights with the ignition switch turned to ON, but should go out whenever the engine is running. If the lamp comes on and stays on while the engine is running, it indicates that a charging system malfunction exists. One side of the bulb is connected to ignition-switched battery feed. The other side of the bulb is switched to ground by the Powertrain Control Module (PCM).

HEADLAMP HIGH BEAM INDICATOR LAMP

The high beam indicator lamp is controlled by the headlamp dimmer (multi-function) switch. One side of the indicator bulb is grounded at all times. The other side of the bulb receives battery feed through the contacts of the dimmer switch when the multi-function switch stalk is actuated to turn the headlamp high beams on. Refer to Group 8L - Lamps for more information.

LOW FUEL WARNING LAMP

A Light-Emitting Diode (LED) on the face of the fuel gauge will light when the fuel level falls below approximately 4 gallons. A low fuel warning module attached to the rear of the fuel gauge controls when the LED will light. When the module senses 66.5 ohms or more resistance from the fuel level sending unit for 10 continuous seconds, the LED will light. When the module senses 63.5 ohms or less resistance from the fuel level sending unit for 20 continuous seconds, the LED is turned off.

LOW OIL PRESSURE WARNING LAMP

The low oil pressure warning lamp lights with the ignition switch in the ON position and the engine not running. The lamp should be off when the engine is running. Battery voltage is supplied to one side of the indicator bulb when the ignition switch is turned ON. The warning lamp side of the combination oil pressure sending unit is connected to the other side of the bulb. When normal engine oil pressure is applied to the sending unit, resistance on the warning lamp side is high and the lamp goes off. When engine oil pressure is too low, resistance on the warning lamp side of the sending unit is low, which causes the bulb to light.

LOW WASHER FLUID WARNING LAMP

The low washer fluid warning lamp indicates when the fluid level in the washer reservoir is too low. The washer fluid level sensor uses a float in the reservoir to monitor fluid level. The action of the float opens or closes the switch within the sensor that provides ignition-switched battery voltage to the lamp bulb. Refer to Group 8K - Wiper and Washer Systems for more information.

MALFUNCTION INDICATOR LAMP

The CHECK ENGINE or Malfunction Indicator Lamp (MIL) lights each time the ignition switch is turned ON, and stays on for 3 seconds as a bulb test. If the Powertrain Control Module (PCM) receives an incorrect signal or no signal from certain fuel or emission system related circuits or components, the lamp is turned on. This will indicate that the PCM has recorded a Diagnostic Trouble Code (DTC) in electronic memory for a circuit or component malfunction. Refer to Group 14 - Fuel System for more information.

SEAT BELT REMINDER LAMP

The seat belt reminder lamp lights for 4 to 8 seconds after the ignition switch is turned to the ON position. A timer in the chime/buzzer module controls ignition-switched battery feed to the lamp. Refer to Group 8U - Chime/Buzzer Warning Systems for more information.

TURN SIGNAL INDICATOR LAMPS

The left and right turn signal indicator lamps are controlled by the turn signal and hazard warning (multi-function) switches. One side of the bulb for each lamp is grounded at all times. The other side of the bulb receives battery feed through the contacts of the multi-function switch when the turn signal lever (multi-function switch stalk) or hazard warning button are actuated. Refer to Group 8J - Turn Signal and Hazard Warning Systems for more information.

UPSHIFT INDICATOR LAMP

Vehicles equipped with manual transmissions have an optional upshift indicator lamp. Ground feed for the lamp is switched by the Powertrain Control Module (PCM). The lamp lights to indicate when the driver should shift to the next highest gear for best fuel economy. The PCM will turn the lamp off after 3 to 5 seconds if the upshift is not performed. The lamp will remain off until the vehicle stops accelerating and is brought back to the range of lamp operation, or until the transmission is shifted into another gear.

The indicator lamp is normally on when the ignition switch is turned ON and is turned off when the engine is started. The lamp will be turned on during vehicle operation according to engine speed and load.

CLUSTER ILLUMINATION LAMPS

All cluster illumination lamps receive battery feed from the instrument lamps fuse in the fuseblock module through the panel dimmer rheostat of the headlamp switch. When the park or headlamps are on, the cluster illumination lamps light. Illumination brightness can be adjusted by rotating the headlamp switch knob (clockwise to dim, counterclockwise to brighten).

DIAGNOSIS

GAUGES

If an individual gauge is inoperative, see the diagnostic procedure under the heading for that gauge. If more than one gauge is inoperative, perform the following:

(1) Check fuse 17 (fuse 26 - RHD) in the fuseblock module. If OK, go to next step. If not OK, replace fuse.

(2) Check for battery voltage at fuse 17 (fuse 26 - RHD) with ignition switch in ON position. If OK, go to next step. If not OK, repair open in circuit from ignition switch and/or refer to Group 8D - Ignition Systems for testing of ignition switch.

(3) Turn ignition switch to OFF. Disconnect battery negative cable. Remove instrument cluster bezel and cluster assembly. Disconnect gauge cluster connector A.

(4) Connect battery negative cable. Turn ignition switch to ON. Check for battery voltage at cavity A8 (cavity A7 - RHD) of cluster connector A. If OK, go to next step. If not OK, repair open in circuit from fuse 17 (fuse 26 - RHD) as required.

(5) Turn ignition switch to OFF. Disconnect battery negative cable. Probe cavities A3 and B2 of cluster connector A. Check for continuity to a good ground. There should be continuity. If OK, replace gauge cluster printed circuit. If not OK, repair open in circuit as required.

COOLANT TEMPERATURE GAUGE

The diagnosis found here addresses an inoperative gauge condition. If the problem being diagnosed is related to gauge accuracy, be certain to confirm that problem is with gauge and not with cooling system performance. Actual engine coolant temperature should be checked with a test gauge or thermometer and compared to gauge readings before you proceed with gauge diagnosis. Refer to Group 7 - Cooling System for more information.

(1) Turn ignition switch to ON. Disconnect coolant temperature sending unit connector. Sending unit (Fig. 1) is located near the left rear corner of the cylinder head. The gauge needle should move to low end of gauge scale. If OK, go to next step. If not OK, go to step 3.

(2) Install a jumper wire from sending unit wiring to ground. The gauge needle should move to high end of gauge scale. If OK, replace sending unit. If not OK, remove jumper wire and go to next step.

(3) Turn ignition switch to OFF. Disconnect battery negative cable. Remove instrument cluster bezel and cluster assembly. Disconnect gauge cluster connector A.

(4) Probe cavity A1 of cluster connector A. Check for continuity to a good ground. There should be no continuity. If OK, go to next step. If not OK, repair short in circuit as required.

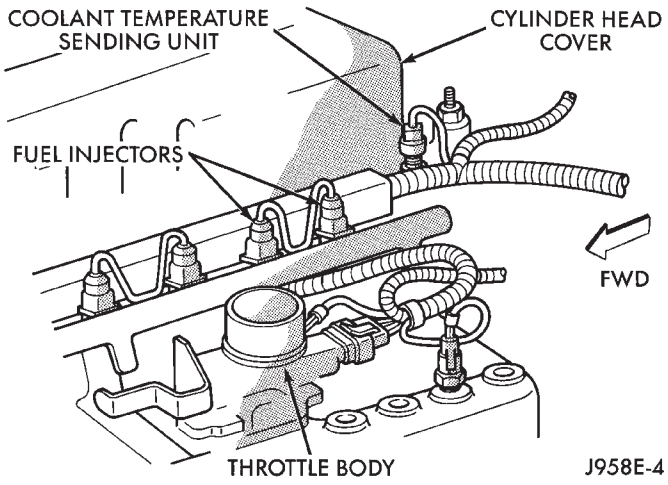

Fig. 1 Coolant Temperature Switch/Sending Unit - Typical

(5) Still probing cavity A1 of cluster connector A, check for continuity to sending unit wiring connector. There should be continuity. If OK, replace gauge. If not OK, repair open in circuit as required.

FUEL GAUGE

The diagnosis found here addresses an inoperative gauge condition. If the problem being diagnosed is related to gauge accuracy, be certain to confirm that problem is with gauge and not with fuel tank. Inspect fuel tank for signs of damage or distortion that could affect sending unit performance before you proceed with gauge diagnosis. Refer to Group 14 - Fuel System for more information.

(1) Turn ignition switch to ON. Disconnect fuel gauge sending unit connector. Connector is located near the left front corner of the fuel tank. The gauge needle should move to low end of gauge scale. If OK, go to next step. If not OK, go to step 4.

(2) Connect a jumper wire between terminals A and B in the body half of the fuel gauge sending unit connector (Fig. 2). The gauge needle should move to high end of gauge scale. If OK, refer to Group 14 - Fuel System for procedure to replace sending unit. If not OK, remove jumper wire and go to next step.

(3) Turn ignition switch to OFF. Disconnect battery negative cable. Check for continuity between terminal A in the body half of fuel gauge sending unit connector and a good ground. There should be continuity. If OK, go to next step. If not OK, repair circuit to ground as required.

(4) Remove instrument cluster bezel and cluster assembly. Disconnect instrument cluster connector A.

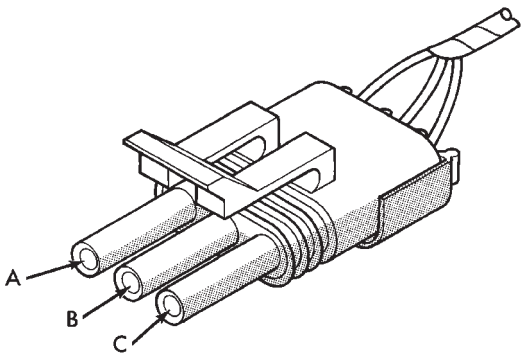

NO.	IDENTIFICATION
A	GROUND
B	FUEL LEVEL SENSE
C	FUEL PUMP RELAY OUTPUT

J958E-5

Fig. 2 Fuel Gauge Sending Unit Connector

(5) Probe cavity B1 of cluster connector A. Check for continuity to a good ground. There should be no continuity. If OK, go to next step. If not OK, repair short circuit as required.

(6) Still probing cavity B1 of cluster connector A, check for continuity to cavity B of sending unit body half connector. There should be continuity. If OK, replace gauge. If not OK, repair open circuit as required.

OIL PRESSURE GAUGE

The diagnosis found here addresses an inoperative gauge condition. If the problem being diagnosed is related to gauge accuracy, be certain to confirm that problem is with gauge and not with engine oiling system performance. Actual engine oil pressure should be checked with a test gauge and compared to gauge readings before you proceed with gauge diagnosis. Refer to Group 9 - Engines for more information.

(1) Turn ignition switch to ON. Disconnect oil pressure sending unit connector. The sending unit (Fig. 3) is located on right side of engine block. On 2.5L engine, it is just forward of ignition distributor and just to the rear of generator mounting bracket. On 4.0L engine, it is just to the rear of ignition distributor and above oil filter adapter. The gauge needle should move to high end of gauge scale. If OK, go to next step. If not OK, go to step 3.

(2) Install a jumper wire from sending unit wiring to ground. The gauge needle should move to low end of gauge scale. If OK, replace sending unit. If not OK, remove jumper wire and go to next step.

(3) Turn ignition switch to OFF. Disconnect battery negative cable. Remove instrument cluster bezel and cluster assembly. Disconnect instrument cluster connector A.

(4) Probe cavity B7 (cavity B8 - RHD) of cluster connector A. Check for continuity to a good ground. There should be no continuity. If OK, go to next step. If not OK, repair short circuit as required.

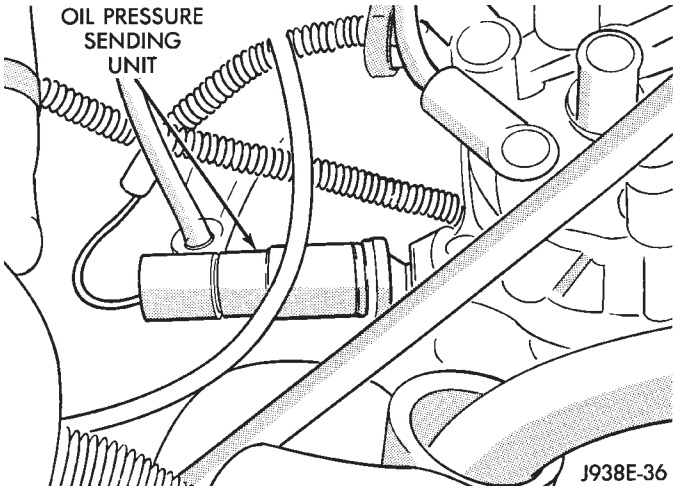

J938E-36

Fig. 3 Oil Pressure Switch/Sending Unit - Typical

(5) Still probing cavity B7 (cavity B8 - RHD) of cluster connector A, check for continuity to sending unit wire connector. There should be continuity. If OK, replace gauge. If not OK, repair open circuit as required.

SPEEDOMETER/ODOMETER

The diagnosis found here addresses an inoperative gauge condition. If the problem being diagnosed is related to gauge accuracy, be certain to confirm that problem is with gauge and not with incorrect speedometer pinion, axle ratio or tire size. Refer to Group 21 - Transmission and Transfer Case for more information.

(1) Perform vehicle speed sensor test as described in the appropriate Powertrain Diagnostic Procedures manual. If OK, go to next step. If not OK, replace vehicle speed sensor.

(2) Disconnect battery negative cable. Unplug vehicle speed sensor, PCM, and daytime running lamp module connectors. Remove instrument cluster bezel and cluster assembly. Disconnect instrument cluster connector A.

(3) Probe cavity A5 (cavity B6 - RHD) of cluster connector A. Check for continuity to a good ground. There should be no continuity. If OK, go to next step. If not OK, repair short circuit as required.

(4) Still probing cavity A5 (cavity B6 - RHD) of cluster connector A, check for continuity to cavity 1 of vehicle speed sensor connector (Fig. 4). There should be continuity. If OK, replace speedometer/odometer. If not OK, repair open circuit as required.

TACHOMETER

(1) With engine running, check for tachometer signal at pin 43 of PCM connector (Fig. 5). See Tachometer Calibration chart in Specifications. If OK, go to next step. If not OK, replace PCM.

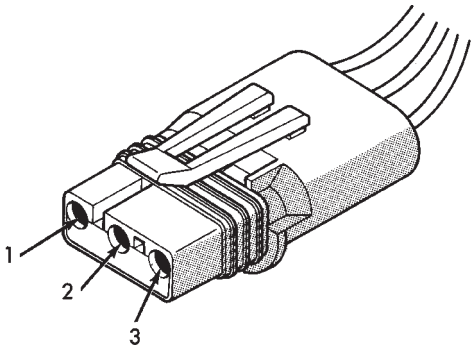

NO.	IDENTIFICATION
1	VSS SIGNAL
2	SENSOR GROUND
3	SENSOR SUPPLY

J958E-6

Fig. 4 Vehicle Speed Sensor Connector

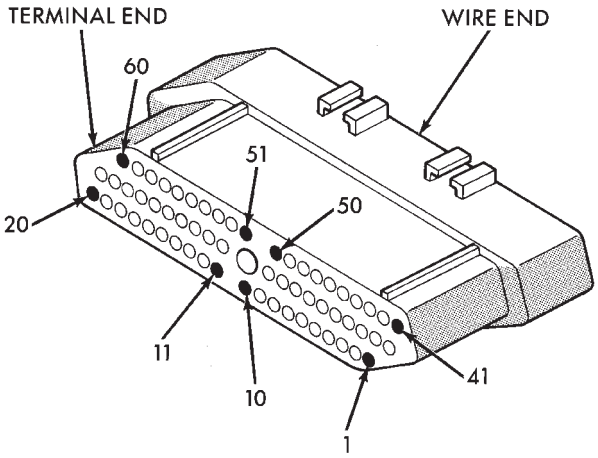

NO.	IDENTIFICATION
32	MALFUNCTION INDICATOR LAMP
36	GENERATOR WARNING LAMP
43	TACHOMETER SIGNAL
54	UPSHIFT INDICATOR LAMP

J958E-7

Fig. 5 Powertrain Control Module Connector

(2) Disconnect battery negative cable. Unplug PCM connector. Remove instrument cluster bezel and cluster assembly. Disconnect instrument cluster connector A.

(3) Probe cavity A6 of cluster connector A. Check for continuity to a good ground. There should be no continuity. If OK, go to next step. If not OK, repair short circuit as required.

(4) Still probing cavity A6 of cluster connector A, check for continuity to cavity 43 of PCM connector. There should be continuity. If OK, replace tachometer. If not OK, repair open circuit as required.

TRIP ODOMETER

If the trip odometer is inoperative, but the speedometer/odometer functions are unaffected, replace speedometer assembly. If speedometer/odometer functions are affected, see Speedometer/Odometer diagnosis in this section.

VOLTMETER

(1) Turn ignition switch to ON. Voltmeter should read battery voltage. If all gauges except voltmeter are OK, go to next step. If other gauges are inoperative, see Gauges in this section for diagnosis.

(2) Using an accurate test voltmeter, measure battery voltage at battery. Compare this reading to instrument cluster voltmeter reading. Now see Voltmeter Calibration chart in Specifications. If voltmeter does not perform to specification, replace voltmeter.

LOW-LINE GAUGE CLUSTER

LOW-LINE

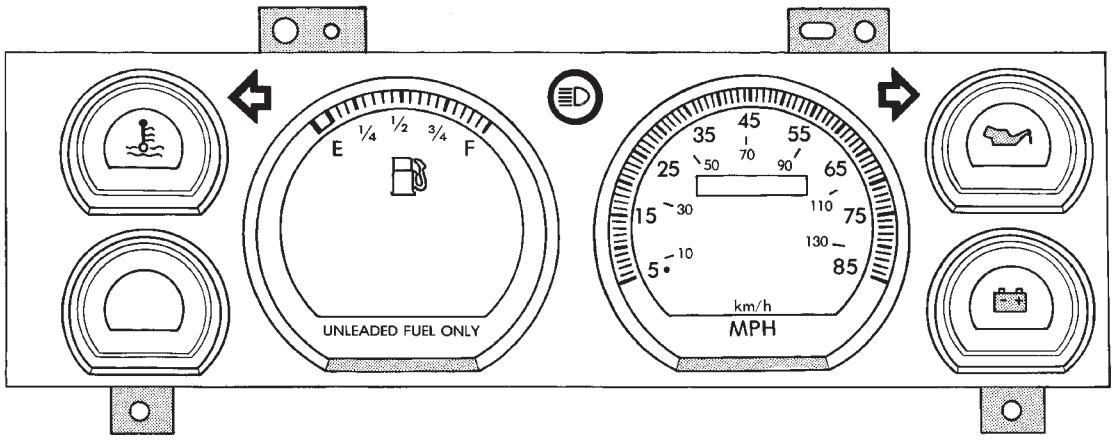

GAUGE CLUSTER CIRCUIT SCHEMATIC

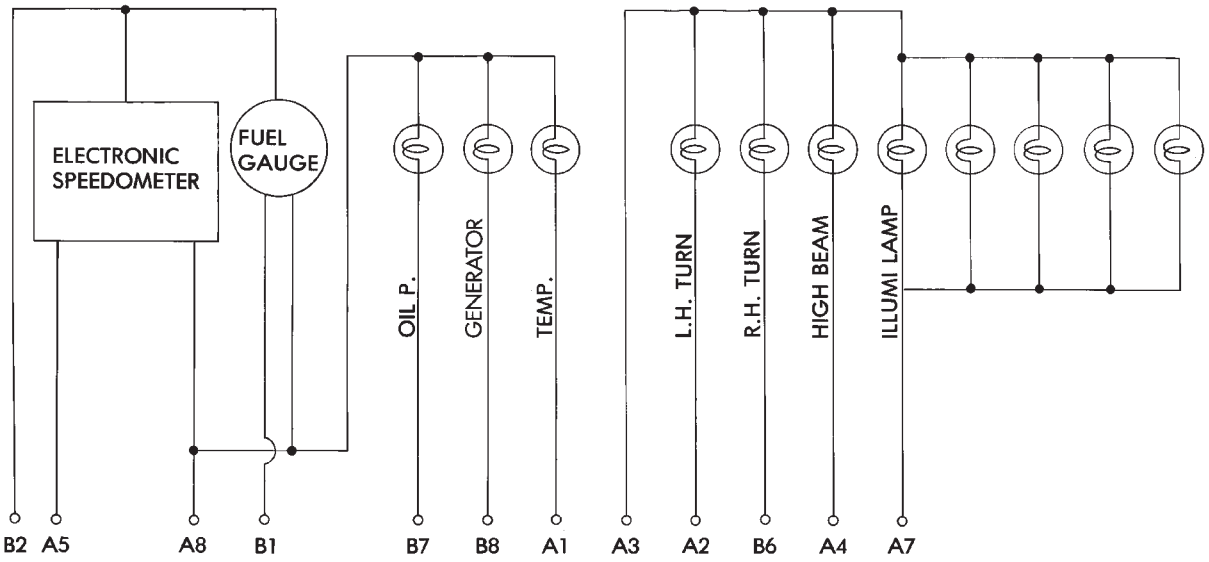

GAUGE CLUSTER PRINTED CIRCUIT TERMINALS

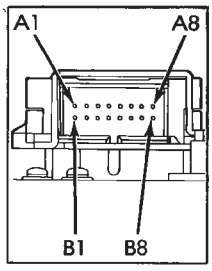

GAUGE CLUSTER LEGEND

NO.	IDENTIFICATION
A1	ENGINE COOLANT TEMP
A2	LEFT TURN INDICATOR
A3	GROUND
A4	HEADLAMP HIGH BEAM
A5	VEHICLE SPEED SENSOR
A6	TACHOMETER
A7	ILLUMINATION
A8	IGNITION
B1	FUEL GAUGE
B2	GROUND
B3	NOT USED
B4	NOT USED
B5	NOT USED
B6	RIGHT TURN INDICATOR
B7	ENGINE OIL PRESSURE
B8	GENERATOR INDICATOR

GAUGE CLUSTER CONNECTOR A

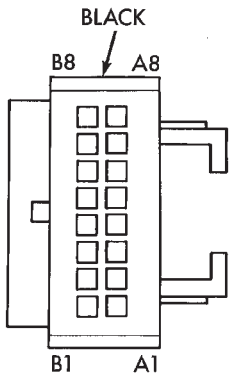

VIEWED FROM TERMINAL END

J958E-2

HIGH-LINE GAUGE CLUSTER (LHD)

HIGH-LINE

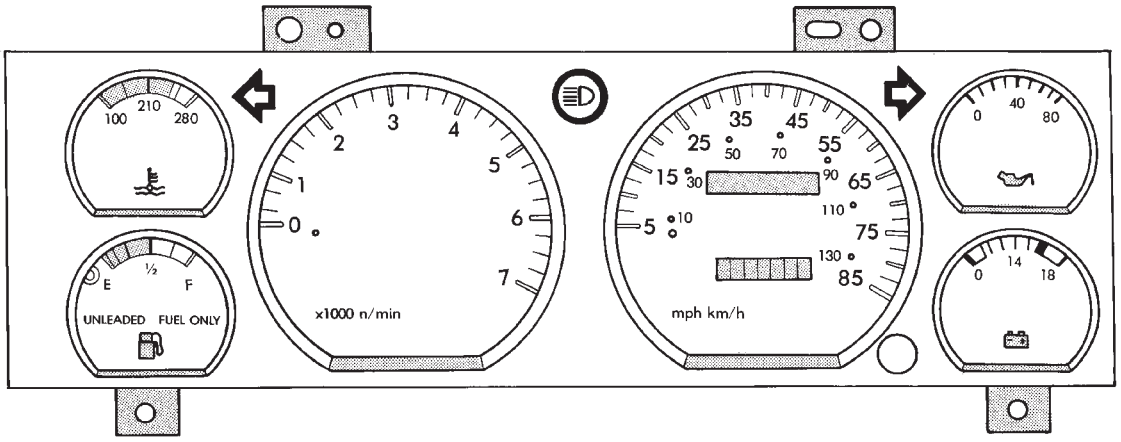

GAUGE CLUSTER CIRCUIT SCHEMATIC

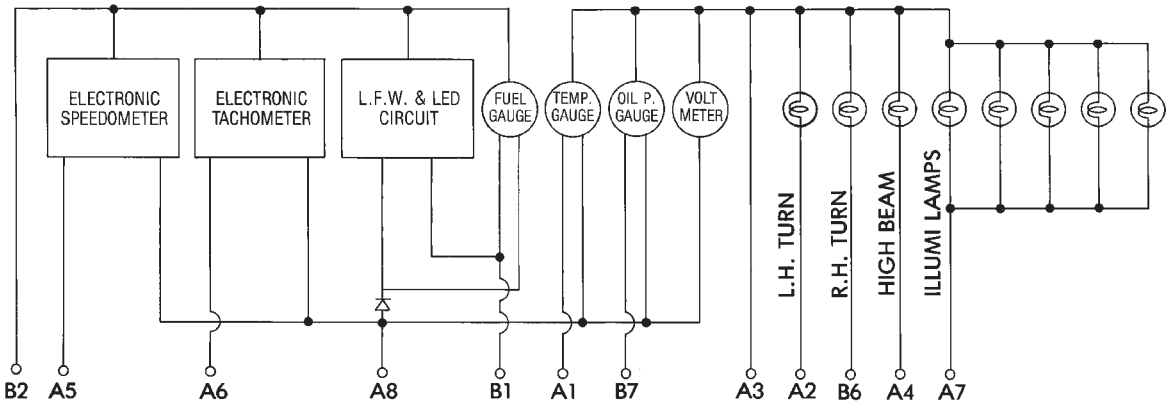

GAUGE CLUSTER PRINTED CIRCUIT TERMINALS

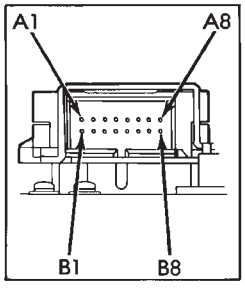

GAUGE CLUSTER LEGEND

NO.	IDENTIFICATION
A1	ENGINE COOLANT TEMP
A2	LEFT TURN INDICATOR
A3	GROUND
A4	HEADLAMP HIGH BEAM
A5	VEHICLE SPEED SENSOR
A6	TACHOMETER
A7	ILLUMINATION
A8	IGNITION
B1	FUEL GAUGE
B2	GROUND
B3	NOT USED
B4	NOT USED
B5	NOT USED
B6	RIGHT TURN INDICATOR
B7	ENGINE OIL PRESSURE
B8	GENERATOR INDICATOR

GAUGE CLUSTER CONNECTOR A

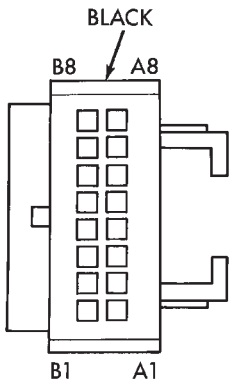

VIEWED FROM TERMINAL END

J958E-3

TELL-TALE CLUSTER (LHD)

USA

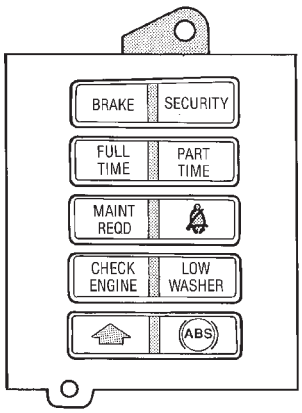

CANADA

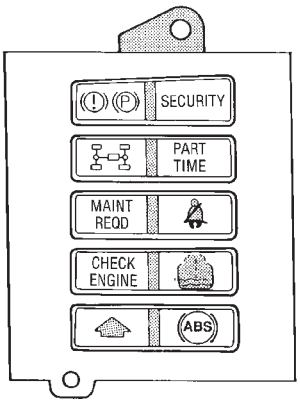

TELL-TALE CLUSTER CIRCUIT SCHEMATIC

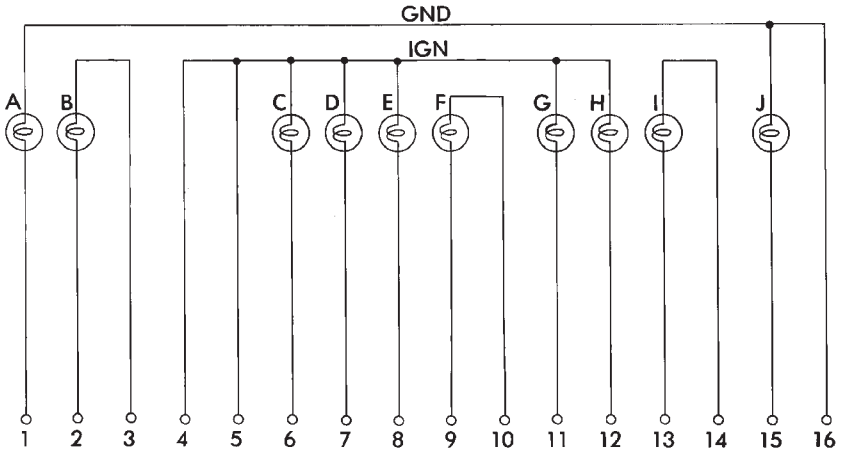

TELL-TALE CLUSTER PRINTED CIRCUIT

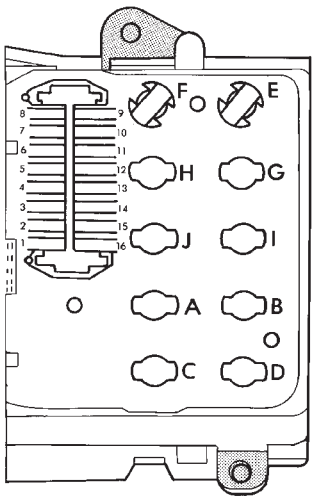

TELL-TALE CLUSTER LEGEND

NO.	LAMP	IDENTIFICATION
1	A	LOW WASHER
2	B	CHECK ENGINE
3	B	IGN
4		IGN
5		IGN
6	C	ABS
7	D	UP SHIFT
8	E	BRAKE
9	F	NOT USED
10	F	BATT
11	G	FULL TIME
12	H	PART TIME
13	I	NOT USED
14	I	IGN
15	J	SEAT BELT
16		GND

TELL-TALE CLUSTER CONNECTOR B

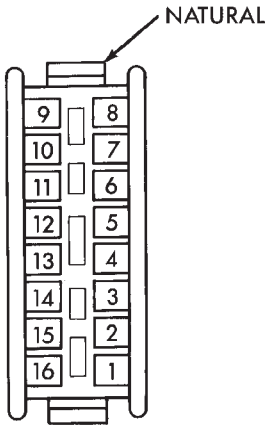

VIEWED FROM TERMINAL END

J958E-1

CLUSTER CONNECTORS (RHD)

GAUGE CLUSTER
CONNECTOR A

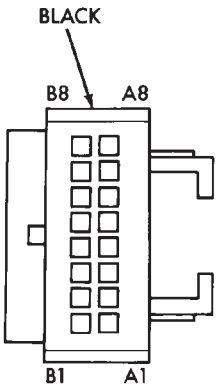

VIEWED FROM TERMINAL END

TELL-TALE CLUSTER
CONNECTOR B

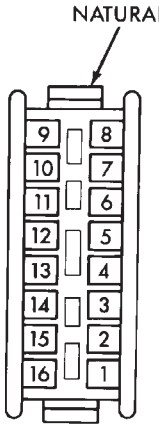

VIEWED FROM TERMINAL END

GAUGE CLUSTER
LEGEND

NO.	IDENTIFICATION
A1	ENGINE COOLANT TEMP
A2	LEFT TURN INDICATOR
A3	GROUND
A4	HEADLAMP HIGH BEAM
A5	NOT USED
A6	ILLUMINATION
A7	IGNITION
A8	NOT USED
B1	FUEL GAUGE
B2	GROUND
B3	NOT USED
B4	NOT USED
B5	NOT USED
B6	VEHICLE SPEED SENSOR
B7	RIGHT TURN INDICATOR
B8	ENGINE OIL PRESSURE

TELL-TALE CLUSTER
LEGEND

NO.	IDENTIFICATION
1	GROUND
2	SEAT BELT
3	IGN
4	NOT USED
5	PART TIME
6	FULL TIME
7	NOT USED
8	NOT USED
9	BRAKE
10	NOT USED
11	NOT USED
12	NOT USED
13	NOT USED
14	IGN
15	CHECK ENGINE
16	LOW WASHER

INDICATOR LAMPS

If an individual indicator lamp is inoperative, see the diagnostic procedure under the heading for that lamp. If more than one indicator lamp or a combination of lamps and gauges in the gauge area of the instrument cluster is inoperative, see Gauges in this section for diagnosis.

If more than one indicator lamp in the tell-tale area of the cluster is inoperative, perform the following:

(1) Check fuse 17 (fuse 26 - RHD) in the fuseblock module. If OK, go to next step. If not OK, replace fuse.

(2) Check for battery voltage at fuse 17 (fuse 26 - RHD) with ignition switch in ON position. If OK, go to next step. If not OK, repair circuit to ignition switch and/or refer to Group 8D - Ignition Systems for testing of ignition switch.

(3) Turn ignition switch to OFF. Disconnect battery negative cable. Remove instrument cluster bezel and cluster assembly. Unplug cluster (tell-tale) connector B.

(4) Connect battery negative cable. Turn ignition switch to ON. Check for battery voltage at cavities 3, 4, and 14 (cavities 3 and 14 - RHD) of cluster connector B. If OK, go to next step. If not OK, repair open circuit to fuse 17 (fuse 26 - RHD) as required.

(5) Turn ignition switch to OFF. Disconnect battery negative cable. Probe cavity 16 (cavity 1 - RHD) of cluster connector B. Check for continuity to a good ground. There should be continuity. If OK, replace cluster tell-tale printed circuit. If not OK, repair open circuit to ground as required.

ANTI-LOCK BRAKE SYSTEM LAMP

The diagnosis found here addresses an inoperative lamp condition. If the ABS lamp stays on with the ignition switch in the ON position, or comes on and stays on while driving, refer to Group 5 - Brakes for diagnosis. If no ABS problem is found, the following procedure will help locate a short or open in the ABS lamp circuit.

(1) Disconnect battery negative cable. Remove instrument cluster bezel and cluster assembly. Disconnect ABS control module connector.

(2) Install a jumper wire between cavity 6 of cluster (tell-tale) connector B and a good ground. Connect battery negative cable and turn ignition switch to ON. Lamp should light. If OK, remove jumper wire and go to next step. If not OK, replace bulb.

(3) Turn ignition switch to OFF. Disconnect battery negative cable and unplug cluster connector B. Check for continuity between cavity 6 of cluster connector B and a good ground. There should be no continuity. If OK, go to next step. If not OK, repair short circuit as required.

(4) Check continuity between cavity 6 of cluster connector B and cavity 52 of ABS control module connector (Fig. 6). There should be continuity. If OK, refer to Group 5 - Brakes for diagnosis of ABS control module. If not OK, repair open circuit as required.

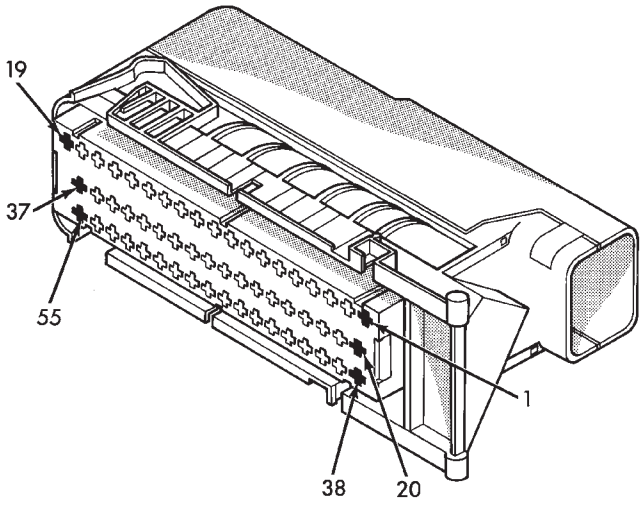

NO.	IDENTIFICATION
52	ANTI-LOCK BRAKE SYSTEM LAMP

J958E-9

Fig. 6 ABS Control Module Connector

BRAKE WARNING LAMP

The diagnosis found here addresses an inoperative lamp condition. If the brake warning lamp stays on with the ignition switch in the ON position and the parking brake released, refer to Group 5 - Brakes for diagnosis. If no service brake or parking brake problem is found, the following procedure will help locate a short circuit or faulty switch.

(1) Unplug parking brake switch connector. Turn ignition switch to START position. Lamp should light. Release ignition switch to ON position. Lamp should go OFF. If OK, go to step 10. If not OK, go to next step.

(2) Unplug brake warning switch connector. Install a jumper wire between two cavities of connector. Turn ignition switch to START. Lamp should light. Remove jumper wire and lamp should go off. If OK, replace brake warning switch. If not OK, remove jumper wire and go to next step.

(3) Turn ignition switch to ON position. Install a jumper wire between cavity B (cavity A - RHD) of brake warning switch connector and a good ground. Lamp should light. If OK, go to step 5. If not OK, go to next step.

(4) Turn ignition switch to OFF. Remove jumper wire and disconnect battery negative cable. Remove instrument cluster bezel and cluster assembly. Install a jumper wire between cavity 8 (cavity 9 - RHD) of cluster (tell-tale) connector B and a good ground.

Connect battery negative cable and turn ignition switch to ON. Lamp should light. If OK, repair open circuit to brake warning switch. If not OK, replace bulb.

(5) Turn ignition switch to OFF and remove jumper wire. Disconnect battery negative cable. Check for continuity between cavity A (cavity B - RHD) of brake warning switch connector and a good ground with ignition switch in START position. There should be continuity. If not OK, go to next step.

(6) Turn ignition switch to OFF and remove jumper wire. Disconnect battery negative cable. Unplug ignition switch connector. Check for continuity between ignition switch connector cavity 3 and a good ground. There should be no continuity. If OK, go to next step. If not OK, repair short circuit between ignition switch and brake warning switch connectors as required.

(7) Check for continuity between ignition switch connector cavity 3 and brake warning switch connector cavity A (cavity B - RHD). There should be continuity. If OK, go to next step. If not OK, repair open circuit as required.

(8) Check for continuity between metal steering column jacket and a good ground. There should be continuity. If OK, go to next step. If not OK, refer to Group 19 - Steering to check steering column ground clip installation.

(9) Turn ignition switch to START position and hold there. Check for continuity between terminal 3 of ignition switch and a good ground. There should be continuity. If not OK, replace ignition switch.

(10) Unplug brake warning switch connector. Check for continuity between parking brake switch connector and a good ground. There should be no continuity. If OK, go to next step. If not OK, repair short circuit as required.

(11) Check for continuity between parking brake switch connector and cavity B (cavity A - RHD) of brake warning switch connector. There should be continuity. If OK, replace parking brake switch. If not OK, repair open circuit to brake warning switch as required.

COOLANT TEMPERATURE WARNING LAMP

The diagnosis found here addresses an inoperative lamp condition. If the problem being diagnosed is related to lamp accuracy, be certain to confirm that problem is with lamp and not with cooling system performance. Actual engine coolant temperature should be checked with a test gauge or thermometer before proceeding with lamp diagnosis. Refer to Group 7 - Cooling System for more information.

(1) Turn ignition switch to START position. Lamp should light. If OK, go to next step. If not OK, go to step 3.

(2) Turn ignition switch to ON. Disconnect coolant temperature switch connector (Fig. 1). Jump switch connector to ground. Lamp should light. If OK, replace switch. If not OK, go to next step.

(3) Turn ignition switch to OFF. Disconnect battery negative cable. Unplug coolant temperature switch connector. Remove instrument cluster bezel and cluster assembly. Disconnect cluster connector A and probe cavity A1. Check for continuity to a good ground. There should be no continuity. If OK, go to next step. If not OK, repair short circuit to coolant temperature switch or ignition switch as required.

(4) Connect cluster connector A to cluster. Install a jumper wire from cavity A1 of cluster connector A to a good ground. Connect battery negative cable and turn ignition switch to ON. Lamp should light. If OK, repair open circuit to coolant temperature switch or ignition switch as required. If not OK, replace bulb.

FOUR-WHEEL DRIVE INDICATOR LAMPS

(1) Apply parking brake, start engine, vehicle in 4WD Lock or 4WD.

(2) Unplug switch and touch harness side of wire to ground. Lamp should light. If OK, check switch operation, replace if bad. If bulb is OK, repair open to indicator.

GENERATOR WARNING LAMP

(1) Disconnect battery negative cable and unplug PCM connector. Install a jumper wire between cavity 36 of PCM connector (Fig. 5) and a good ground. Connect battery negative cable and turn ignition switch to ON. Lamp should light. Unplug jumper wire and lamp should go off. If OK, refer to Powertrain Diagnostic Procedures to check PCM. If not OK, go to next step.

(2) Turn ignition switch to OFF and disconnect battery negative cable. Remove instrument cluster bezel and cluster assembly. Install a jumper wire between cavity B8 of cluster connector A and a good ground. Connect battery negative cable and turn ignition switch to ON. Lamp should light. If OK, go to next step. If not OK, replace bulb.

(3) Turn ignition switch to OFF and disconnect battery negative cable. Unplug cluster connector A. Probe cavity B8 of cluster connector A and check for continuity to a good ground. There should be no continuity. If OK, go to next step. If not OK, repair short circuit as required.

(4) Check for continuity between cavity B8 of cluster connector A and cavity 36 of PCM connector. There should be continuity. If not OK, repair open circuit as required.

HEADLAMP HIGH BEAM INDICATOR LAMP

(1) Check that headlamp high beams are functional. If OK, go to next step. If not OK, refer to Group 8L - Lamps for diagnosis of headlamp system.

(2) Disconnect battery negative cable. Remove instrument cluster bezel and cluster assembly. Unplug cluster connector A. Connect battery negative cable. Turn headlamps on and select high beam. Check for battery voltage at cavity A4 of cluster connector A. If OK, replace indicator bulb. If not OK, repair circuit to headlamp dimmer (multi-function) switch as required.

LOW FUEL WARNING LAMP

(1) Check that fuel gauge is operating as designed. See Fuel Gauge Calibration chart in Specifications. If OK, go to next step. If not OK, see Fuel Gauge in this section for diagnosis.

(2) With at least 10 gallons of fuel in fuel tank, unplug fuel tank sending unit connector. Turn ignition switch to ON and wait 10 seconds. Lamp (LED) should light. Reconnect fuel tank sending unit and wait 20 seconds. Lamp (LED) should go off. If not OK, replace low fuel warning lamp module.

LOW OIL PRESSURE WARNING LAMP

The diagnosis found here addresses an inoperative lamp condition. If the problem being diagnosed is related to lamp accuracy, be certain to confirm that problem is with lamp and not with engine oiling system. Actual engine oil pressure should be checked with a test gauge before you proceed with lamp diagnosis. Refer to Group 9 - Engines for more information.

(1) Turn ignition switch to ON. Lamp should light. Start engine. Lamp should go off. If not OK, turn engine off and go to next step.

(2) Unplug connector at oil pressure switch (Fig. 3). The switch is located on right side of engine block. On 2.5L engine, it is just forward of ignition distributor and just to the rear of generator mounting bracket. On 4.0L engine, it is just to the rear of ignition distributor and above oil filter adapter. Install a jumper wire from connector to a good ground. Turn ignition switch to ON. Lamp should light. Unplug jumper wire. Lamp should go out. If OK, replace oil pressure switch. If not OK, go to next step.

(3) Turn ignition switch to OFF. Disconnect battery negative cable. Remove instrument cluster bezel and cluster assembly. Install a jumper wire from cavity B7 (cavity B8 - RHD) of cluster connector A to a good ground. Connect battery negative cable and turn ignition switch to ON. Lamp should light. If OK, go to next step. If not OK, replace lamp bulb.

(4) Turn ignition switch to OFF. Disconnect battery negative cable. Unplug instrument cluster connector A. Check continuity between cavity B7 (cavity B8 - RHD) of cluster connector A and a good ground. There should be no continuity. If OK, go to next step. If not OK, repair short circuit as required.

(5) Check continuity between cavity B7 (cavity B8 - RHD) of cluster connector A and oil pressure switch connector. There should be continuity. If not OK, repair open circuit as required.

LOW WASHER FLUID WARNING LAMP

(1) Unplug washer fluid level switch connector. Turn ignition switch to ON. Check for battery voltage at connector cavity A. If OK, turn ignition switch to OFF and go to next step. If not OK, repair open circuit to fuse F6 in PDC.

(2) Install a jumper wire from cavity A to cavity B of washer fluid level switch connector. Turn ignition switch to ON. Lamp should light. Unplug jumper and lamp should go OFF. If OK, replace washer fluid level switch. If not OK, go to next step.

(3) Turn ignition switch to OFF. Disconnect battery negative cable. Remove instrument cluster bezel and cluster assembly. Unplug instrument cluster (tell-tale) connector B. Check continuity between cavity 16 (cavity 1 - RHD) of cluster connector B and a good ground. There should be continuity. If OK, plug cluster connector B back into cluster and go to next step. If not OK, repair open circuit to ground as required.

(4) Connect battery negative cable. Install a jumper wire from a 12-volt battery feed to cavity 1 (cavity 16 - RHD) of cluster connector B. Lamp should light. If OK, go to next step. If not OK, replace bulb.

(5) Disconnect battery negative cable. Unplug cluster connector B. Check continuity between cavity 1 (cavity 16 - RHD) of cluster connector B and a good ground. There should be no continuity. If OK, go to next step. If not OK, repair short circuit to switch as required.

(6) Check continuity between cavity 1 (cavity 16 - RHD) of cluster connector B and cavity B of washer fluid level switch connector. There should be continuity. If not OK, repair open circuit to switch as required.

MALFUNCTION INDICATOR LAMP

The diagnosis found here addresses an inoperative lamp condition. If the lamp comes on and stays on with engine running, refer to Group 14 - Fuel System for diagnosis. If no fuel or emission system problem is found, the following procedure will help locate a short or open in the lamp circuit.

(1) Disconnect battery negative cable. Unplug PCM connector. Install a jumper wire from cavity 32 of PCM connector (Fig. 5) to a good ground. Connect battery negative cable. Turn ignition switch to ON. Lamp should light. Remove jumper wire and lamp should go OFF. If OK, refer to Powertrain Diagnostic Procedures to check PCM. If not OK, go to next step.

(2) Turn ignition switch to OFF. Disconnect battery negative cable. Remove instrument cluster bezel and cluster assembly. Install a jumper wire from cavity 2 (cavity 15 - RHD) of cluster (tell-tale) connector B to a good ground. Connect battery negative cable. Turn

ignition switch to ON. Lamp should light. If OK, go to next step. If not OK, replace bulb.

(3) Turn ignition switch to OFF. Disconnect battery negative cable. Unplug cluster connector B. Check for continuity between cavity 2 (cavity 15 - RHD) of cluster connector B and a good ground. There should be no continuity. If OK, go to next step. If not OK, repair short circuit to PCM as required.

(4) Check continuity between cavity 2 (cavity 15 - RHD) of cluster connector B and cavity 32 of PCM connector. There should be continuity. If not OK, repair open circuit to PCM as required.

SEAT BELT REMINDER LAMP

(1) Refer to Group 8U - Chime/Buzzer Warning Systems to check chime/buzzer module operation. If OK, go to next step. If not OK, replace chime/buzzer module.

(2) Disconnect battery negative cable. Remove instrument cluster bezel and cluster assembly. Unplug cluster (tell-tale) connector B. Check for continuity between cavity 16 (cavity 1 - RHD) of cluster connector B and a good ground. There should be continuity. If OK, plug cluster connector B back into cluster and go to next step. If not OK, repair open circuit to ground as required.

(3) Connect battery negative cable. Install a jumper wire between a 12-volt battery feed and cavity 15 (cavity 2 - RHD) of cluster connector B. Lamp should light. If OK, go to next step. If not OK, replace bulb.

(4) Disconnect battery negative cable. Unplug chime/buzzer module from fuseblock module (connector near fuseblock module - RHD). Unplug cluster connector B. Check for continuity between cavity 15 (cavity 2 - RHD) of cluster connector B and a good ground. There should be no continuity. If OK, go to next step. If not OK, repair short circuit to chime/buzzer module as required.

(5) Check continuity between cavity 15 (cavity 2 - RHD) of cluster connector B and cavity for terminal A3 of chime/buzzer module (Fig. 7) in fuseblock module (connector near fuseblock module - RHD). There should be continuity. If not OK, repair open circuit to chime/buzzer module as required.

TURN SIGNAL INDICATOR LAMPS

(1) Disconnect battery negative cable. Remove instrument cluster bezel and cluster assembly. Probe cavity A3 of cluster connector A. Check for continuity to a good ground. There should be continuity. If OK, go to next step. If not OK, repair open circuit to ground.

(2) Connect battery negative cable. Install a jumper wire from cavity A2 (left indicator) or cavity B6 (cavity B7 - RHD)(right indicator) of cluster connector A to a 12-volt battery feed. Lamp should light. If OK, continue to next step. If not OK, replace bulb.

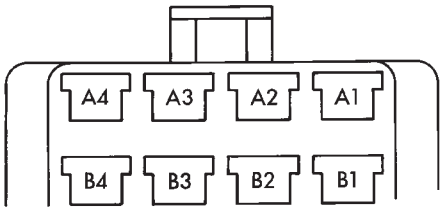

VIEWED FROM TERMINAL END

NO.	IDENTIFICATION
A3	SEAT BELT REMINDER LAMP

J958E-10

Fig. 7 Chime/Buzzer Module Receptacle

(3) Disconnect battery negative cable. Check for continuity between cavity A2 (left indicator) or cavity B6 (cavity B7 - RHD)(right indicator) of cluster connector A and cavity A1 (cavity 11 - RHD)(left front turn signal) or cavity F2 (cavity 10 - RHD)(right front turn signal) of bulkhead disconnect (dash to instrument panel connector B - RHD). There should be continuity. If OK, refer to Group 8J - Turn Signal and Hazard Warning Systems for further diagnosis. If not OK, repair open circuit as required.

UPSHIFT INDICATOR LAMP

(1) Disconnect battery negative cable. Unplug PCM connector. Connect battery negative cable. Turn ignition switch to ON. Install a jumper wire from cavity 54 of PCM connector (Fig. 5) to a good ground. Lamp should light. Remove jumper from ground. Lamp should go off. If OK, refer to Powertrain Diagnostic Procedures manual to diagnose PCM. If not OK, turn ignition switch to OFF and go to next step.

(2) Disconnect battery negative cable. Remove instrument cluster bezel and cluster assembly. Install a jumper wire from cavity 7 of cluster (tell-tale) connector B to a good ground. Connect battery negative cable. Turn ignition switch to ON. Lamp should light. If OK, go to next step. If not OK, replace bulb.

(3) Turn ignition switch to OFF. Disconnect battery negative cable. Unplug cluster connector B. Check for continuity between cavity 7 of cluster connector B and a good ground. There should be no continuity. If OK, go to next step. If not OK, repair short circuit as required.

(4) Check for continuity between cavity 7 of cluster connector B and cavity 54 of PCM connector. There should be continuity. If not OK, repair open circuit as required.

CLUSTER ILLUMINATION LAMPS

(1) Check fuse 19 (fuse 25 - RHD) in fuseblock module. If OK, go to next step. If not OK, replace fuse.

(2) Turn park lamps on at headlamp switch. Rotate headlamp switch knob counterclockwise to just before interior lamps detent. Check for battery voltage at fuse 19 (fuse 25 - RHD) in fuseblock module. Rotate headlamp switch clockwise while observing test voltmeter. Reading should go from battery voltage to zero volts. If OK, go to next step. If not OK, repair open circuit to headlamp switch or refer to Group 8L - Lamps to diagnose headlamp switch.

(3) Disconnect battery negative cable. Remove instrument cluster bezel and cluster assembly. Unplug cluster connector A. Connect battery negative cable. Turn park lamps on at headlamp switch. Rotate headlamp switch knob counterclockwise to just before interior lamps detent. Check for battery voltage at cavity A7 (cavity A6 - RHD) of cluster connector A. If OK, go to next step. If not OK, repair open circuit to fuse as required.

(4) Turn park lamps off. Disconnect battery negative cable. Remove fuse 19 (fuse 25 - RHD) from fuseblock module. Probe cavity A7 (cavity A6 - RHD) of cluster connector A. Check for continuity to a good ground. There should be no continuity. If OK, go to next step. If not OK, repair short circuit as required.

(5) Probe cavity A3 of cluster connector A. Check for continuity to ground. There should be continuity. If not OK, repair open circuit as required.

SERVICE PROCEDURES

CLUSTER ASSEMBLY REMOVE/INSTALL

(1) Disconnect battery negative cable.

(2) Remove upper and lower steering column shrouds and steering column to instrument panel bezel gap hider. If equipped with tilt steering, apply tape to tilt mechanism on top of steering column to protect instrument panel bezel from damage during removal.

(3) Remove 4 instrument cluster bezel attaching screws and remove bezel. Bezel is snap fit at locations shown (Fig. 8).

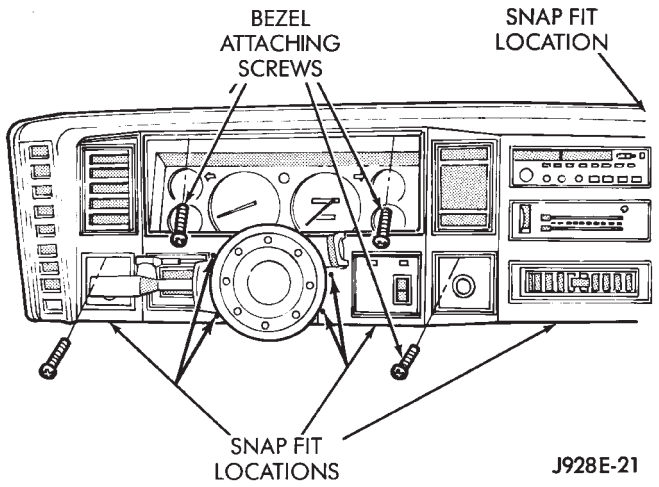

Fig. 8 Cluster Bezel Remove/Install

(4) Remove cigar lighter housing attaching screws (Fig. 9).

(5) If equipped, remove switch housing(s) attaching screws (Fig. 9).

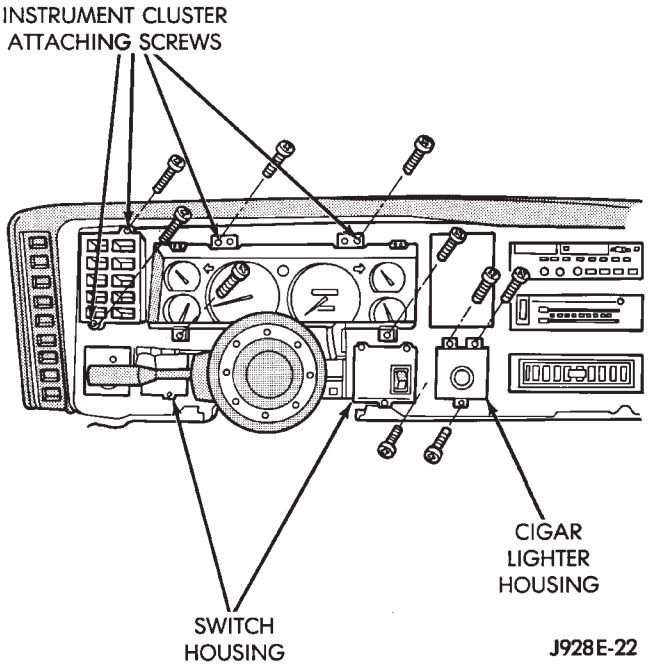

Fig. 9 Cluster Assembly Remove/Install

(6) Remove cluster assembly attaching screws (Fig. 9).

(7) Pull cluster assembly far enough out to disconnect 2 cluster harness connectors from the rear. Remove cluster assembly.

(8) Reverse removal procedures to install.

GAUGES REMOVE/INSTALL

(1) Remove cluster assembly as described in Cluster Assembly Remove/Install.

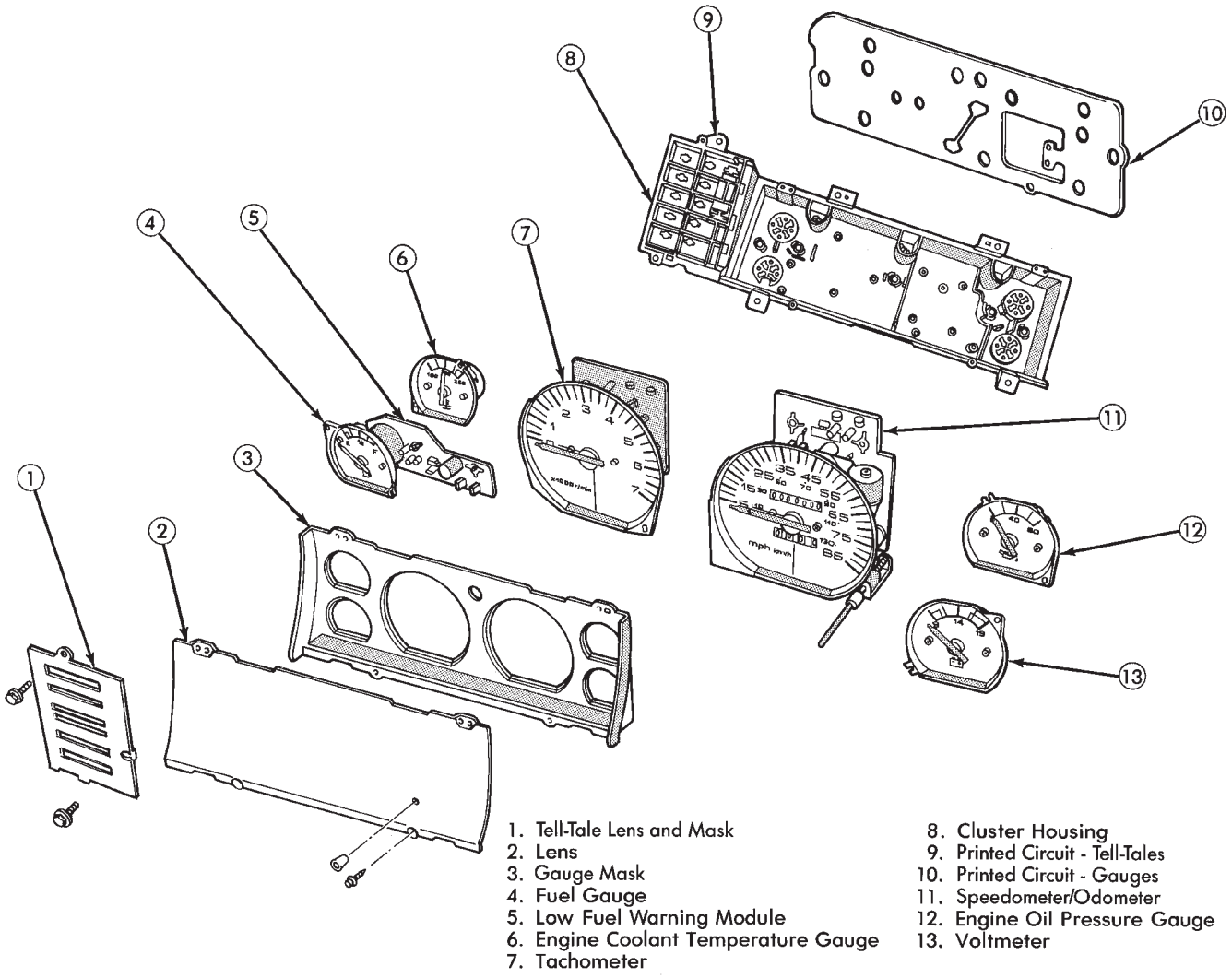

Fig. 10 Instrument Cluster

(2) If equipped with trip odometer, gently pull knob off trip odometer push pin. Remove cluster lens and mask (Fig. 10).

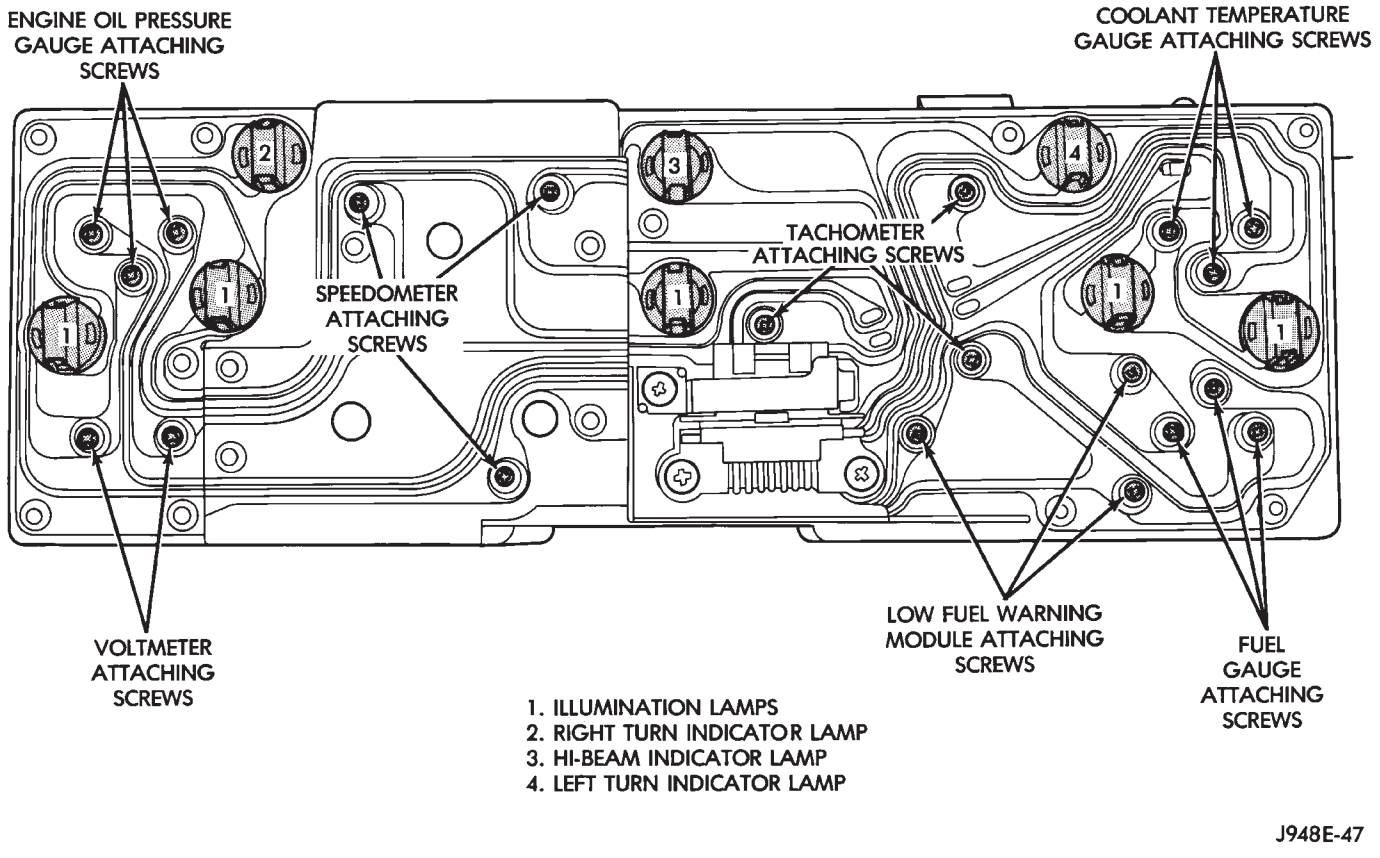

Fig. 11 Printed Circuit Remove/Install

(3) Remove gauge attaching screws from rear of cluster housing (Fig. 11). Remove gauge from front of housing.

(4) Reverse removal procedures to install.

PRINTED CIRCUIT REMOVE/INSTALL

GAUGE CLUSTER

(1) Remove cluster assembly as described in Cluster Assembly Remove/Install.

(2) Remove all gauges as described in Gauges Remove/Install.

(3) Remove screw holding the cluster connector retaining strap to cluster housing. Remove strap and pivot connector down (Figs. 12 and 13).

(4) Remove all lamp holders from printed circuit.

(5) Remove printed circuit including connector.

(6) Reverse removal procedures to install.

TELL-TALE CLUSTER

(1) Remove cluster assembly as described in Cluster Assembly Remove/Install.

(2) Remove all lamp holders from printed circuit.

(3) Remove printed circuit.

(4) Reverse removal procedures to install.

HEADLAMP SWITCH REMOVE/INSTALL

(1) Disconnect battery negative cable.

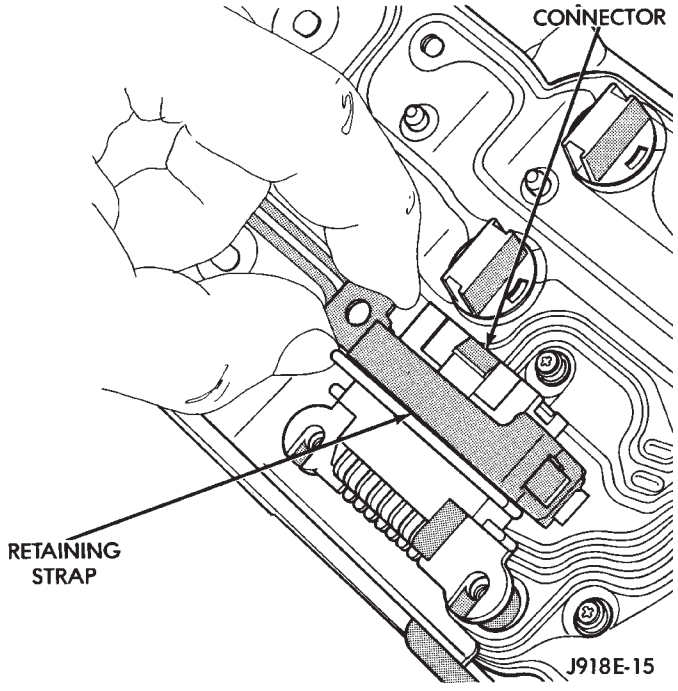

Fig. 12 Cluster Connector Retaining Strap

(2) Place headlamp switch control knob in the headlamp ON position.

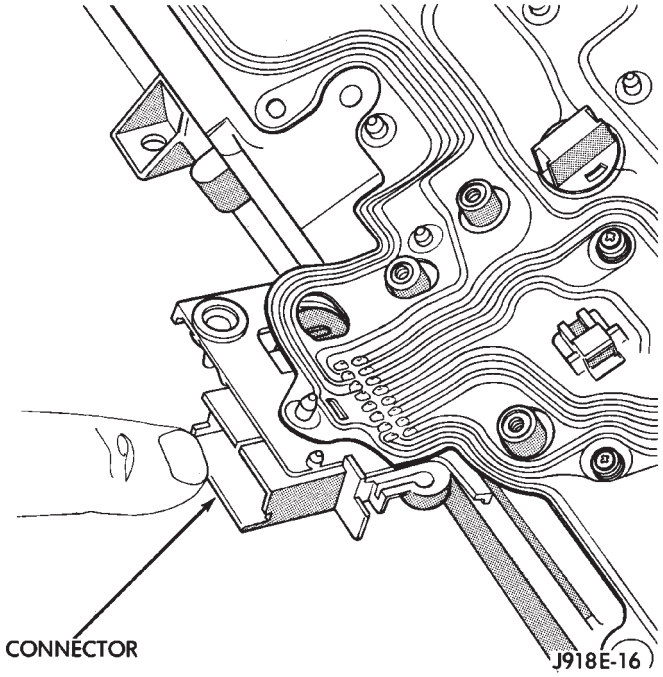

Fig. 13 Printed Circuit And Cluster Connector

(3) Reach under the instrument panel and depress the switch shaft release/retainer button (Fig. 14). Pull the switch control knob and shaft outward.

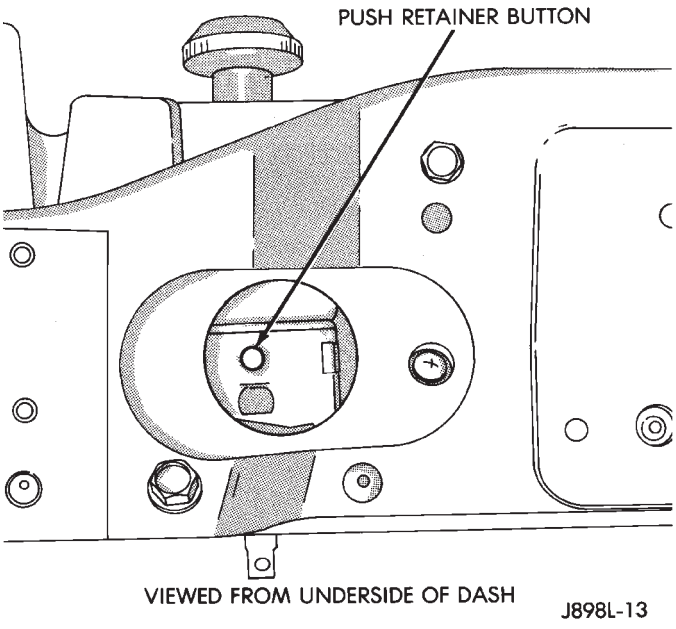

Fig. 14 Headlamp Switch Knob And Shaft Remove/ Install

(4) Remove the headlamp switch retaining nut from the front of the instrument panel (Fig. 15).

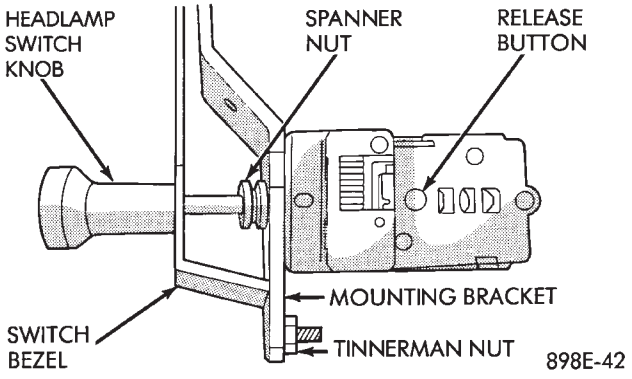

Fig. 15 Headlamp Switch Remove/Install

(5) Disconnect the wire harness connector from the switch.

(6) Remove the headlamp switch from the instrument panel.

(7) Reverse removal procedures to install.

INSTRUMENT PANEL REMOVE/INSTALL

(1) Disconnect battery negative cable.

(2) Remove the following (Fig. 16):

- parking brake release handle
- lower heat/AC duct below steering column
- ash receiver
- lower instrument panel
- cluster bezel
- cluster assembly
- radio
- climate control panel
- instrument panel switches
- headlamp switch
- antenna connector
- blower motor resistors
- ground lead
- unplug glove box lamp
- defroster cowl outlet panel

Remove driver's side heat/AC outlet to gain access to driver's side defroster cowl outlet panel retaining clip to aid in removal (Fig. 17).

- instrument panel attaching bolts
- steering column attaching bolts
- instrument panel assembly.

The instrument panel wiring harness is attached to the back of the instrument panel assembly and must be installed correctly.

(3) To install instrument panel, position instrument panel assembly on side mounting bolts (Fig. 18).

(4) Route wiring harnesses and secure instrument panel assembly mounting points.

(5) Connect tube to lap cooler.

(6) Reverse removal procedures to complete installation.

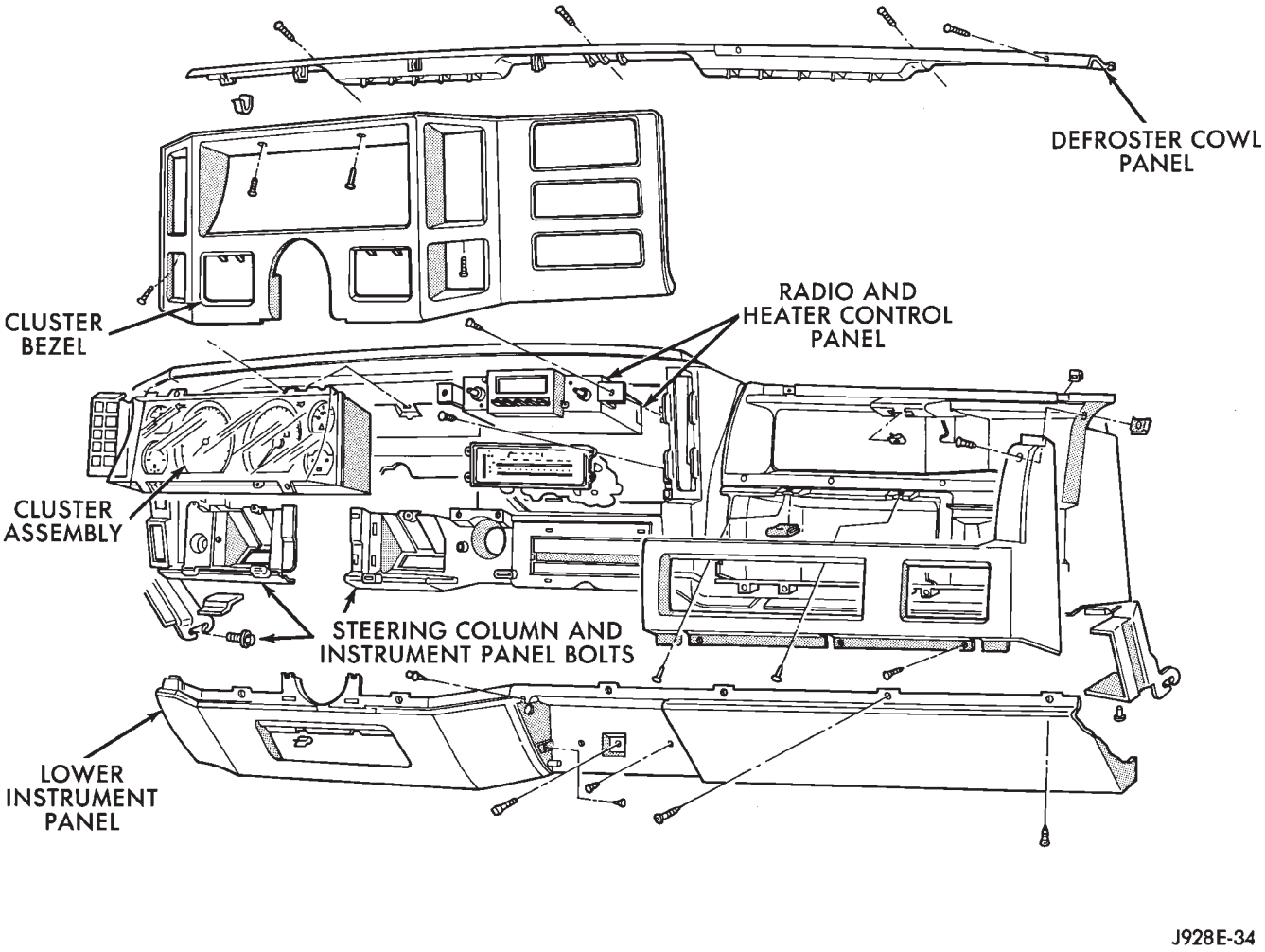

Fig. 16 Instrument Panel Exploded View

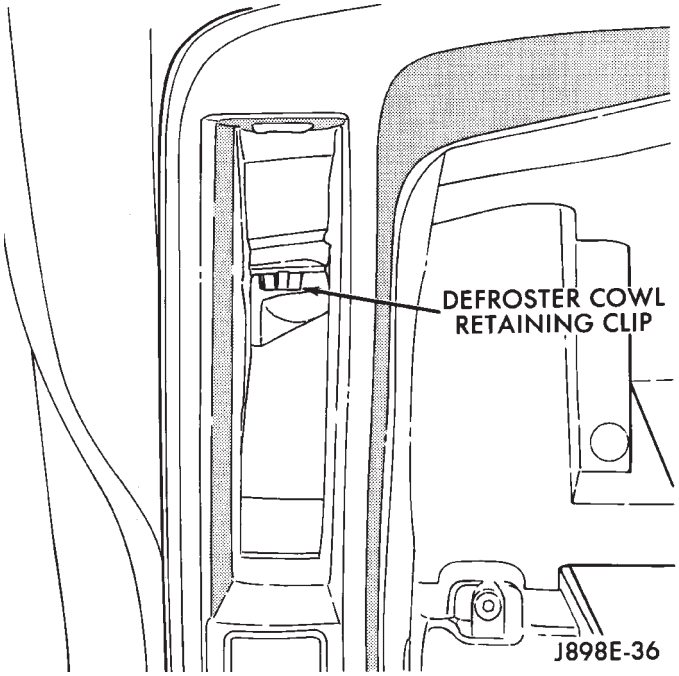

Fig. 17 Driver's Side Defroster Cowl Retaining Clip

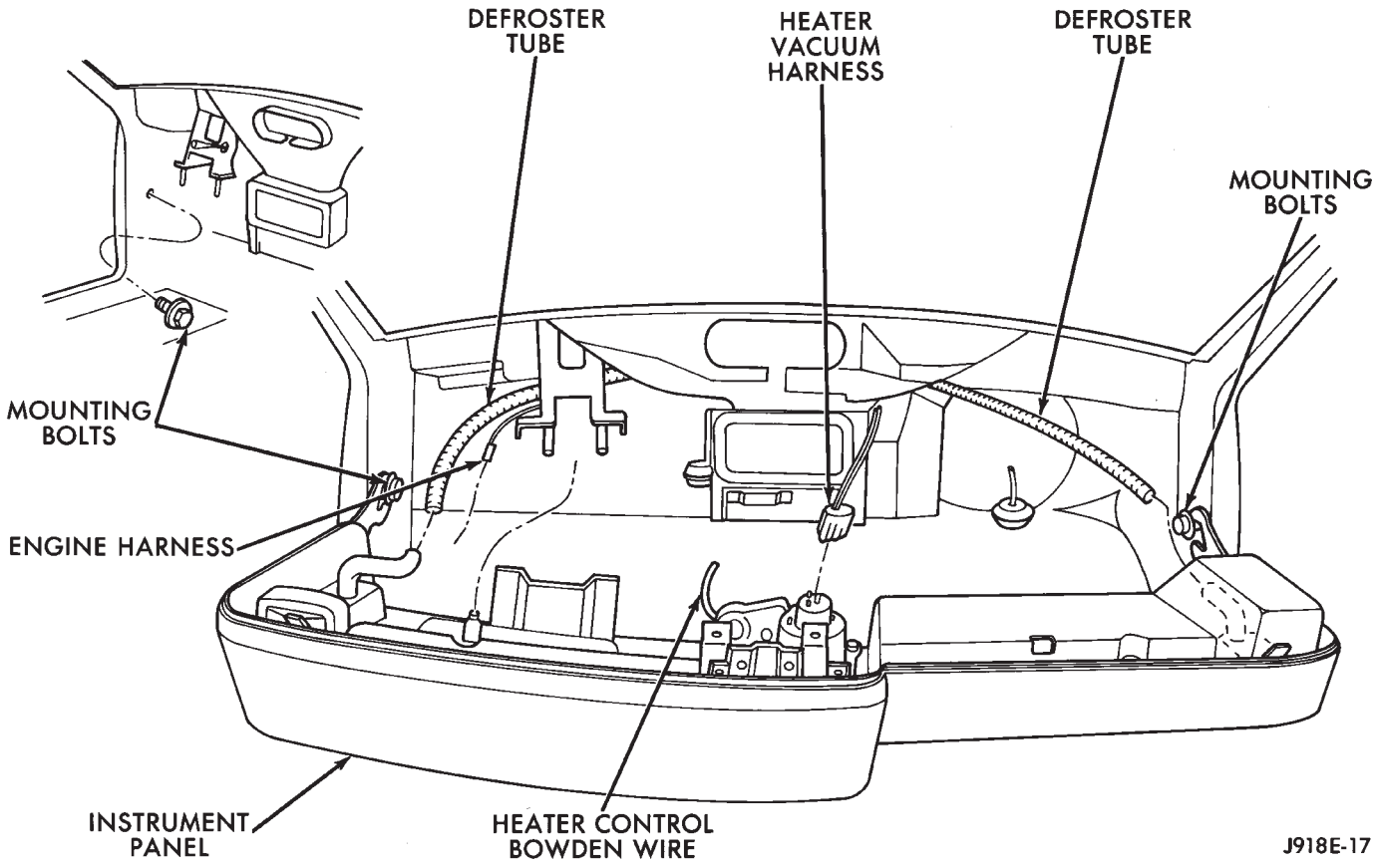

Fig. 18 Instrument Panel Install

SPECIFICATIONS

GAUGE CLUSTER

OIL PRESSURE GAUGE CALIBRATION

POINTER POSITION	RESISTANCE
0 psi Grad. ± 2°	1 ohm
40 psi Grad. ± 3½°	46 ohms
80 psi Grad. ± 3°	87 ohms

TEMPERATURE GAUGE CALIBRATION

POINTER POSITION	RESISTANCE
100°F Grad. ± 3½°	1365 ohms
220°F Grad. ± 2½°	93.5 ohms
260°F Grad. ± 2½°	55.1 ohms

FUEL GAUGE CALIBRATION

POINTER POSITION	RESISTANCE
Empty Grad. +0° −4°	105 ohm
1/2 Full Grad. ± 3½°	33 ohms
Full Grad. + 6° −0°	5 ohms

VOLTMETER CALIBRATION

VOLTAGE INPUT	POINTER POSITION
12V	12V Grad. ±6°
16V	16V Grad. ±3°

TACHOMETER CALIBRATION

ENGINE	FREQUENCY	INDICATION
4 & 6 CYLINDER	66.7 HZ	2000 RPM ± 140
	166.7 HZ	5000 RPM ± 140

SPEEDOMETER CALIBRATION

ENGINE	FREQUENCY	INDICATION
4 & 6 CYLINDER	44.4 HZ	20 mph −1.5 +4.5
	122.2 HZ	55 mph −.3 +3.3
	166.5 HZ	75 mph −.3 +3.3

J918E-9X

INSTRUMENT PANEL AND GAUGES—YJ

CONTENTS

	page		page
INSTRUMENT PANEL AND GAUGES—YJ	22	SERVICE PROCEDURES	31
DIAGNOSIS	23	SPECIFICATIONS	39
GENERAL INFORMATION	20		

GENERAL INFORMATION

Following are general descriptions of major instrument panel components. Refer to Group 8W - Wiring Diagrams for complete circuit descriptions and diagrams.

INSTRUMENT PANEL

Modular instrument panel construction allows all gauges and controls to be serviced from the front of the panel. In addition, most instrument panel wiring and heater components can be accessed without complete instrument panel removal.

Removal of the left instrument cluster bezel allows access to the main cluster assembly and most switches. Removal of the center cluster bezel allows access to the gauge package cluster assembly, the heater controls, and the radio. Removal of the cluster assemblies allows access to the individual gauges, illumination and indicator lamp bulbs, printed circuits, and most wiring.

INSTRUMENT CLUSTERS

The instrument cluster used on YJ (Wrangler) models consists of two separate assemblies. The main cluster assembly is located on the left side of the instrument panel, centered over the steering column opening. The gauge package cluster assembly is located near the center of the instrument panel. Each cluster assembly is served by a separate printed circuit and wiring connector. Some variations of each cluster exist due to optional equipment and regulatory requirements.

The main cluster assembly includes a speedometer/odometer/trip odometer and a tachometer. It also includes provisions for the following indicator lamps:

- anti-lock brake system lamp
- brake warning lamp
- headlamp high beam indicator lamp
- malfunction indicator (Check Engine) lamp
- seat belt reminder lamp
- turn signal indicator lamps
- upshift indicator lamp.

The gauge package cluster assembly includes a four-wheel drive indicator lamp and the following gauges:

- coolant temperature gauge
- fuel gauge
- oil pressure gauge
- voltmeter.

GAUGES

With the ignition switch in the ON or START position, voltage is supplied to all gauges through the two cluster printed circuits. With the ignition switch in the OFF position, voltage is not supplied to the gauges. A gauge pointer may remain within the gauge scale after the ignition switch is OFF. However, the gauges do not accurately indicate any vehicle condition unless the ignition switch is ON.

All gauges except the odometer are air core magnetic units. Two fixed electromagnetic coils are located within the gauge. These coils are wrapped at right angles to each other around a movable permanent magnet. The movable magnet is suspended within the coils on one end of a shaft. The gauge needle is attached to the other end of the shaft.

One of the coils has a fixed current flowing through it to maintain a constant magnetic field strength. Current flow through the second coil changes, which causes changes in its magnetic field strength. The current flowing through the second coil can be changed by:

- a variable resistor-type sending unit (fuel level, coolant temperature, or oil pressure)
- changes in electrical system voltage (voltmeter)
- electronic control circuitry (speedometer/odometer, tachometer).

The gauge needle moves as the movable permanent magnet aligns itself to the changing magnetic fields created around it by the electromagnets.

COOLANT TEMPERATURE GAUGE

The coolant temperature gauge gives an indication of engine coolant temperature. The coolant temperature sending unit is a thermistor that changes electrical resistance with changes in engine coolant temperature. High sending unit resistance causes low coolant temperature readings. Low resistance causes high coolant temperature readings. Sending unit resistance values are shown in a chart in Specifications.

FUEL GAUGE

The fuel gauge gives an indication of the level of fuel in the fuel tank. The fuel gauge sending unit has a float attached to a swing-arm in the fuel tank. The float moves up or down within the fuel tank as fuel level changes. As the float moves, an electrical contact on the swing-arm wipes across a resistor coil, which changes sending unit resistance. High sending unit resistance causes high fuel level readings. Low resistance causes low fuel level readings. Sending unit resistance values are shown in a chart in Specifications.

OIL PRESSURE GAUGE

The oil pressure gauge gives an indication of engine oil pressure. The combination oil pressure sending unit contains a flexible diaphragm. The diaphragm moves in response to changes in engine oil pressure. As the diaphragm moves, sending unit resistance increases or decreases. High resistance on the gauge side of the sending unit causes high oil pressure readings. Low resistance causes low oil pressure readings. Sending unit resistance values are shown in a chart in Specifications.

SPEEDOMETER/ODOMETER

The speedometer/odometer give an indication of vehicle speed and travel distance. The speedometer receives a vehicle speed pulse signal from the Vehicle Speed Sensor (VSS). An electronic integrated circuit contained within the speedometer reads and analyzes the pulse signal. It then adjusts the ground path resistance of one electromagnet in the gauge to control needle movement. It also sends signals to an electric stepper motor to control movement of the odometer number rolls. Frequency values for the pulse signal are shown in a chart in Specifications.

The VSS is mounted to an adapter near the transfer case output shaft. The sensor is driven through the adapter by a speedometer pinion gear. The adapter and pinion vary with transmission, axle ratio and tire size. Refer to Group 21 - Transmission and Transfer Case for more information.

TACHOMETER

The tachometer gives an indication of engine speed in Revolutions-Per-Minute (RPM). With the engine running, the tachometer receives an engine speed pulse signal from the Powertrain Control Module (PCM). An electronic integrated circuit contained within the tachometer reads and analyzes the pulse signal. It then adjusts the ground path resistance of one electromagnet in the gauge to control needle movement. Frequency values for the pulse signal are shown in a chart in Specifications.

TRIP ODOMETER

The trip odometer is driven by the same electronic integrated circuit as the speedometer/odometer. However, by depressing the trip odometer reset knob on the face of the speedometer, the trip odometer can be reset to zero. The trip odometer is serviced only as a part of the speedometer/odometer gauge assembly.

VOLTMETER

The voltmeter is connected in parallel with the battery. With the ignition switch ON, the voltmeter indicates battery or generator output voltage, whichever is greater.

INDICATOR LAMPS

All indicator lamps, except the four-wheel drive indicator, are located in the main cluster tell-tale area above the steering column opening. Each of the lamps is served by the main cluster printed circuit and cluster connector. The four-wheel drive indicator lamp is located in the gauge package cluster and is served by the gauge package printed circuit and cluster connector.

Up to eleven indicator lamps can be found in the tell-tale area of the main cluster. These lamps are arranged in two rows, with six lamps in the upper row and five lamps in the lower row.

ANTI-LOCK BRAKE SYSTEM LAMP

The Anti-Lock Brake System (ABS) lamp is switched to ground by the ABS module. The module lights the lamp when the ignition switch is turned to the START position as a bulb test. The lamp will stay on for 3 to 5 seconds after vehicle start-up to indicate a system self-test is in process. If the lamp remains on after start-up, or comes on and stays on while driving, it may indicate that the ABS module has detected a system malfunction or that the system has become inoperative. Refer to Group 5 - Brakes for more information.

BRAKE WARNING LAMP

The brake warning lamp warns the driver that the parking brake is applied or that the pressures in the two halves of the split brake hydraulic system are unequal. With the ignition switch turned ON, battery

voltage is supplied to one side of the indicator bulb. A ground path for the bulb is provided by 3 switches. The bulb will light when:

- the brake warning switch is closed (indicating unequal brake system hydraulic pressures possibly due to brake fluid leakage)
- the ignition switch is in the START position (bulb test)
- the parking brake switch is closed (parking brake is applied).

Refer to Group 5 - Brakes for more information.

FOUR-WHEEL DRIVE INDICATOR LAMP

This lamp lights when the transfer case is engaged in the 4H or 4L position. Voltage is supplied to one side of the indicator bulb. A switch on the front axle disconnect housing is connected to the other side of the indicator bulb. When the switch is closed, a path to ground is provided and the indicator bulb lights.

HEADLAMP HIGH BEAM INDICATOR LAMP

The high beam indicator lamp is controlled by the headlamp dimmer switch. One side of the indicator bulb is grounded at all times. The other side of the bulb receives battery feed through the contacts of the dimmer switch when the turn signal switch lever is actuated to turn the headlamp high beams on. Refer to Group 8L - Lamps for more information.

MALFUNCTION INDICATOR LAMP

The CHECK ENGINE or Malfunction Indicator Lamp (MIL) lights each time the ignition switch is turned ON, and stays on for 3 seconds as a bulb test. If the Powertrain Control Module (PCM) receives an incorrect signal or no signal from certain fuel or emission system related circuits or components, the lamp is turned on. This will indicate that the PCM has recorded a Diagnostic Trouble Code (DTC) in electronic memory for a circuit or component malfunction. Refer to Group 14 - Fuel System for more information.

SEAT BELT REMINDER LAMP

The seat belt reminder lamp lights for 4 to 8 seconds after the ignition switch is turned to the ON position. A timer in the chime/buzzer module controls ignition-switched battery feed to the lamp. Refer to Group 8U - Chime/Buzzer Warning Systems for more information.

TURN SIGNAL INDICATOR LAMPS

The left and right turn signal indicator lamps are controlled by the turn signal and hazard warning switches. One side of the bulb for each lamp is grounded at all times. The other side of the bulb receives battery feed through the contacts of the turn signal switch, when the turn signal lever or hazard warning button are actuated. Refer to Group 8J - Turn Signal and Hazard Warning Systems for more information.

UPSHIFT INDICATOR LAMP

Vehicles equipped with manual transmissions have an optional upshift indicator lamp. Ground feed for the lamp is switched by the Powertrain Control Module (PCM). The lamp lights to indicate when the driver should shift to the next highest gear for best fuel economy. The PCM will turn the lamp off after 3 to 5 seconds if the upshift is not performed. The lamp will remain off until the vehicle stops accelerating and is brought back to the range of lamp operation, or until the transmission is shifted into another gear.

The indicator lamp is normally on when the ignition switch is turned ON and is turned off when the engine is started. The lamp will be turned on during vehicle operation according to engine speed and load.

CLUSTER ILLUMINATION LAMPS

All cluster illumination lamps receive battery feed from the instrument lamps fuse in the fuseblock module through the panel dimmer switch. When the park or headlamps are on, the cluster illumination lamps light. Illumination brightness can be adjusted by rotating the panel dimmer thumb-wheel, which is next to the headlamp switch.

DIAGNOSIS

GAUGES

If an individual gauge is inoperative, see the diagnostic procedure under the heading for that gauge. If more than one gauge in the main cluster or gauge package cluster is inoperative, perform the following:

(1) Check fuse 9 in the fuseblock module. If OK, go to next step. If not OK, replace fuse.

(2) Check for battery voltage at fuse 9 with ignition switch in ON position. If OK, go to next step. If not OK, repair open in circuit from ignition switch and/or refer to Group 8D - Ignition Systems for testing of ignition switch.

(3) Turn ignition switch to OFF. Disconnect battery negative cable. Remove the affected instrument cluster bezel and cluster assembly. Disconnect the cluster connector.

(4) Connect battery negative cable. Turn ignition switch to ON. If problem is in main cluster, check for battery voltage at cavity 3 and cavity 19 of main cluster connector. If problem is in gauge package cluster, check for battery voltage at cavity 2 and cavity 12 of gauge package cluster connector. If OK, go to next step. If not OK, repair open in circuit from fuse 9 as required.

(5) Turn ignition switch to OFF. Disconnect battery negative cable. Probe cavities 14 and 20 of main cluster connector, or cavities 1 and 13 of gauge package cluster connector. Check for continuity to a good ground. There should be continuity. If OK, replace the cluster printed circuit. If not OK, repair open in circuit as required.

COOLANT TEMPERATURE GAUGE

The diagnosis found here addresses an inoperative gauge condition. If the problem being diagnosed is related to gauge accuracy, be certain to confirm that problem is with gauge and not with cooling system performance. Actual engine coolant temperature should be checked with a test gauge or thermometer and compared to gauge readings before you proceed with gauge diagnosis. Refer to Group 7 - Cooling System for more information.

(1) Turn ignition switch to ON. Disconnect coolant temperature sending unit connector. Sending unit (Fig. 1) is located near left rear corner of the cylinder head. The gauge needle should move to low end of gauge scale. If OK, go to next step. If not OK, go to step 3.

(2) Install a jumper wire from sending unit wiring to ground. The gauge needle should move to high end of gauge scale. If OK, replace sending unit. If not OK, remove jumper wire and go to next step.

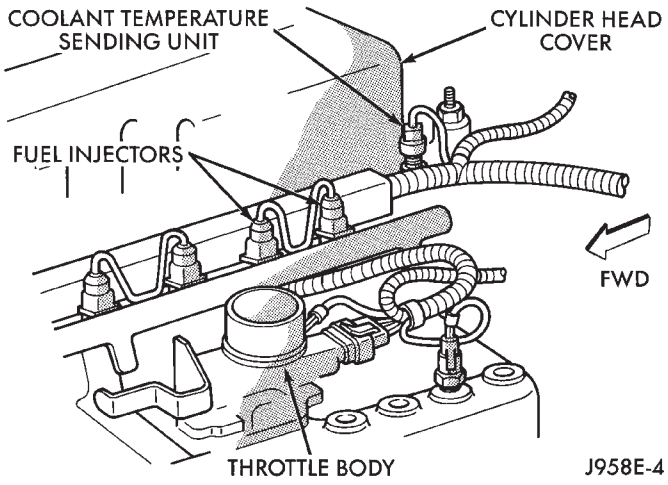

Fig. 1 Coolant Temperature Sending Unit - Typical

(3) Turn ignition switch to OFF. Disconnect battery negative cable. Remove center instrument cluster bezel and gauge package cluster assembly. Disconnect cluster connector.

(4) Probe cavity 11 of cluster connector. Check for continuity to a good ground. There should be no continuity. If OK, go to next step. If not OK, repair short in circuit as required.

(5) Still probing cavity 11 of cluster connector, check for continuity to sending unit wiring connector. There should be continuity. If OK, replace gauge. If not OK, repair open in circuit as required.

FUEL GAUGE

The diagnosis found here addresses an inoperative gauge condition. If the problem being diagnosed is related to gauge accuracy, be certain to confirm that problem is with gauge and not with fuel tank. Inspect fuel tank for signs of damage or distortion that could affect sending unit performance before you proceed with gauge diagnosis. Refer to Group 14 - Fuel System for more information.

(1) Turn ignition switch to ON. Disconnect fuel gauge sending unit connector. Connector is located near the left front upper corner of fuel tank. The gauge needle should move to high end of gauge scale. If OK, go to next step. If not OK, go to step 4.

(2) Connect a jumper wire between terminals 1 and 2 in the body half of the fuel gauge sending unit connector (Fig. 2). The gauge needle should move to low end of gauge scale. If OK, refer to Group 14 - Fuel System for procedure to replace sending unit. If not OK, remove jumper wire and go to next step.

(3) Turn ignition switch to OFF. Disconnect battery negative cable. Check for continuity between terminal 1 in the body half of fuel gauge sending unit connector and a good ground. There should be

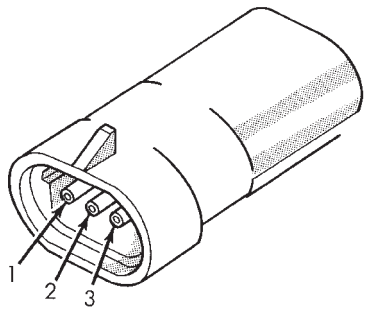

NO.	IDENTIFICATION
1	GROUND
2	FUEL LEVEL SENSE
3	FUEL PUMP RELAY OUTPUT

J958E-12

Fig. 2 Fuel Gauge Sending Unit Connector

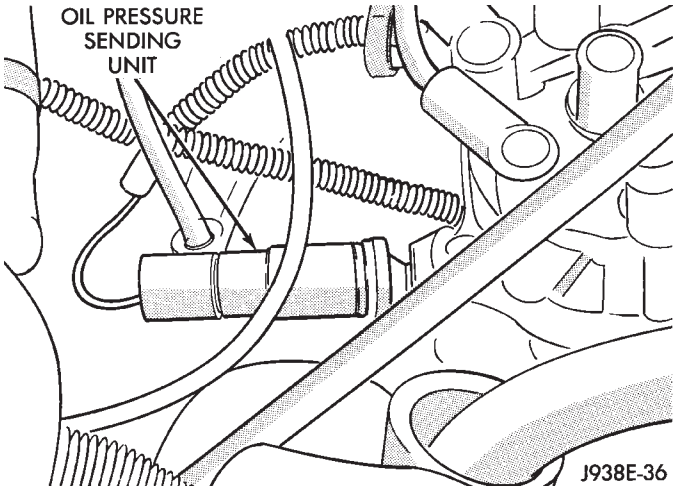

Fig. 3 Oil Pressure Sending Unit - Typical

continuity. If OK, go to next step. If not OK, repair circuit to ground as required.

(4) Remove center instrument cluster bezel and gauge package cluster assembly. Disconnect cluster connector.

(5) Probe cavity 6 of cluster connector. Check for continuity to a good ground. There should be no continuity. If OK, go to next step. If not OK, repair short circuit as required.

(6) Still probing cavity 6 of cluster connector, check for continuity to cavity 2 of sending unit wiring body half connector. There should be continuity. If OK, replace gauge. If not OK, repair open circuit as required.

OIL PRESSURE GAUGE

The diagnosis found here addresses an inoperative gauge condition. If the problem being diagnosed is related to gauge accuracy, be certain to confirm that problem is with gauge and not with engine oiling system performance. Actual engine oil pressure should be checked with a test gauge and compared to gauge readings before you proceed with gauge diagnosis. Refer to Group 9 - Engines for more information.

(1) Turn ignition switch to ON. Disconnect oil pressure sending unit connector. The sending unit (Fig. 3) is located on right side of engine block. On 2.5L engine, it is just forward of ignition distributor and just to the rear of generator mounting bracket. On 4.0L engine, it is just to the rear of ignition distributor and above oil filter adapter. The gauge needle should move to high end of gauge scale. If OK, go to next step. If not OK, go to step 3.

(2) Install a jumper wire from sending unit wiring to ground. The gauge needle should move to low end of gauge scale. If OK, replace sending unit. If not OK, remove jumper wire and go to next step.

(3) Turn ignition switch to OFF. Disconnect battery negative cable. Remove center instrument cluster bezel and gauge package cluster assembly. Disconnect cluster connector.

(4) Probe cavity 9 of cluster connector. Check for continuity to a good ground. There should be no continuity. If OK, go to next step. If not OK, repair short circuit as required.

(5) Still probing cavity 9 of cluster connector, check for continuity to sending unit wire connector. There should be continuity. If OK, replace gauge. If not OK, repair open circuit as required.

SPEEDOMETER/ODOMETER

The diagnosis found here addresses an inoperative gauge condition. If the problem being diagnosed is related to gauge accuracy, be certain to confirm that problem is with gauge and not with incorrect speedometer pinion, axle ratio or tire size. Refer to Group 21 - Transmission and Transfer Case for more information.

(1) Perform vehicle speed sensor test as described in the appropriate Powertrain Diagnostic Procedures manual. If OK, go to next step. If not OK, replace vehicle speed sensor.

(2) Disconnect battery negative cable. Unplug vehicle speed sensor, PCM, and daytime running lamp module connectors. Remove left instrument cluster bezel and main cluster assembly. Disconnect cluster connector.

(3) Probe cavity 13 of cluster connector. Check for continuity to a good ground. There should be no continuity. If OK, go to next step. If not OK, repair short circuit as required.

(4) Still probing cavity 13 of cluster connector, check for continuity to cavity 1 of vehicle speed sensor connector (Fig. 4). There should be continuity. If OK, replace speedometer/odometer. If not OK, repair open circuit as required.

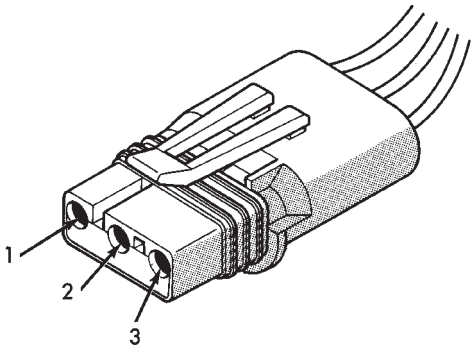

NO.	IDENTIFICATION
1	VSS SIGNAL
2	SENSOR GROUND
3	SENSOR SUPPLY

J958E-6

Fig. 4 Vehicle Speed Sensor Connector

TACHOMETER

(1) With engine running, check for tachometer signal at pin 43 of PCM connector (Fig. 5). See Tachometer Calibration chart in Specifications. If OK, go to next step. If not OK, replace PCM.

(2) Disconnect battery negative cable. Unplug PCM connector. Remove left instrument cluster bezel and main cluster assembly. Disconnect cluster connector.

(3) Probe cavity 12 of cluster connector. Check for continuity to a good ground. There should be no continuity. If OK, go to next step. If not OK, repair short circuit as required.

(4) Still probing cavity 12 of cluster connector, check for continuity to cavity 43 of PCM connector. There should be continuity. If OK, replace tachometer. If not OK, repair open circuit as required.

TRIP ODOMETER

If the trip odometer is inoperative, but the speedometer/odometer functions are unaffected, replace speedometer assembly. If speedometer/odometer functions are affected, see Speedometer/Odometer diagnosis in this section.

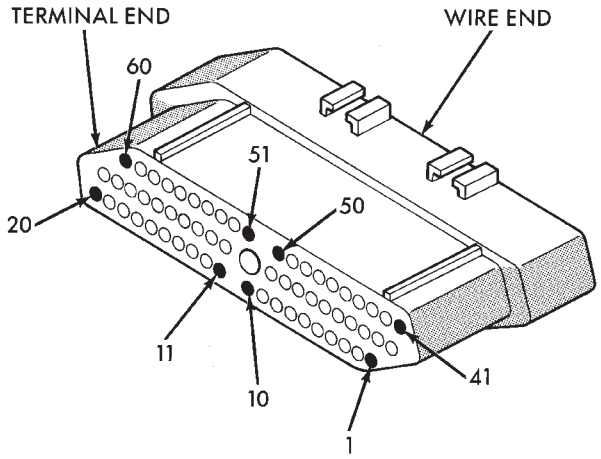

NO.	IDENTIFICATION
32	MALFUNCTION INDICATOR LAMP
36	GENERATOR WARNING LAMP
43	TACHOMETER SIGNAL
54	UPSHIFT INDICATOR LAMP

J958E-7

Fig. 5 Powertrain Control Module Connector

VOLTMETER

(1) Turn ignition switch to ON. Voltmeter should read battery voltage. If all gauges except voltmeter are OK, go to next step. If other gauges are inoperative, see Gauges in this section for diagnosis.

(2) Using an accurate test voltmeter, measure battery voltage at battery. Compare this reading to instrument cluster voltmeter reading. Now see Voltmeter Calibration chart in Specifications. If voltmeter does not perform to specification, replace voltmeter.

MAIN CLUSTER

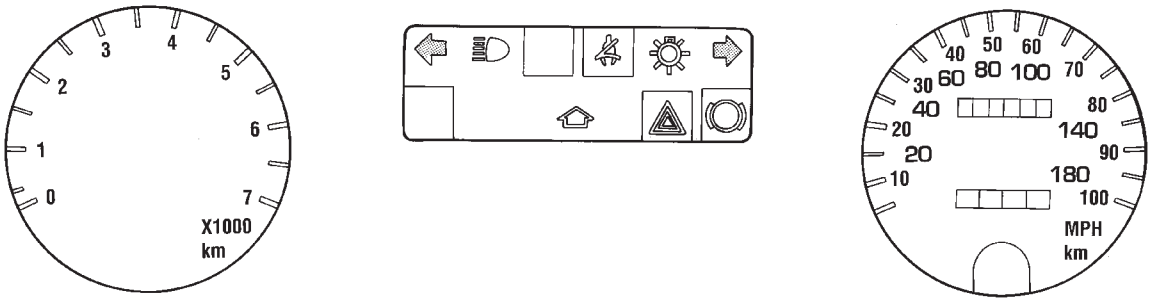

MAIN CLUSTER CIRCUIT SCHEMATIC

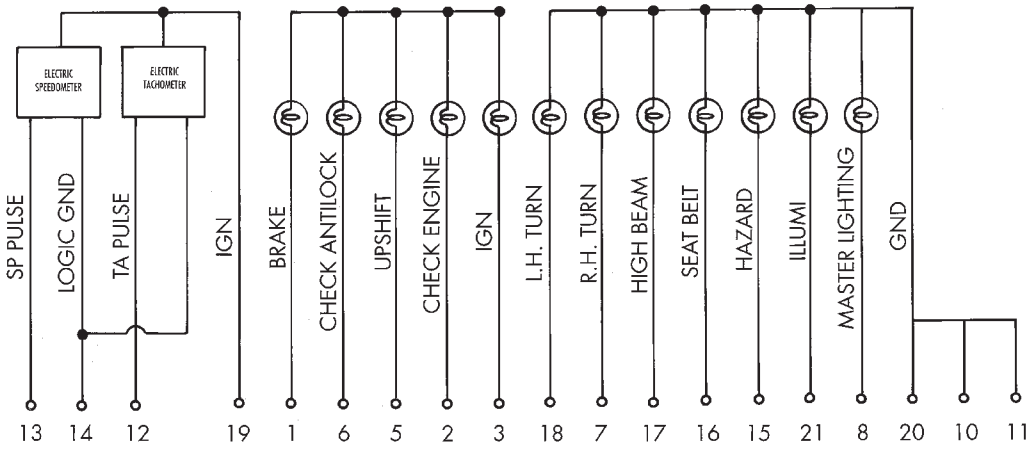

MAIN CLUSTER PRINTED CIRCUIT TERMINALS

MAIN CLUSTER LEGEND

MAIN CLUSTER CONNECTOR

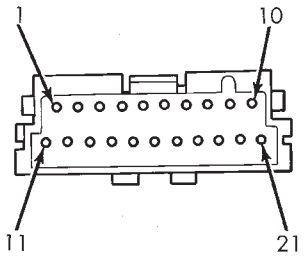

NO.	IDENTIFICATION
1	BRAKE
2	CHECK ENGINE
3	IGNITION
4	NOT USED
5	UP SHIFT
6	ABS
7	RIGHT TURN
8	NOT USED
9	NOT USED
10	GROUND
11	GROUND
12	TACHOMETER
13	VEHICLE SPEED SENSOR
14	GROUND
15	NOT USED
16	SEAT BELT
17	HEADLAMP HIGH BEAM
18	LEFT TURN
19	IGNITION
20	GROUND
21	ILLUMINATION

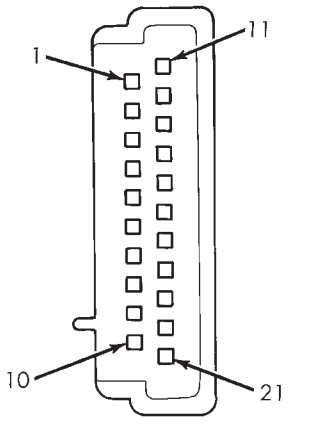

VIEWED FROM TERMINAL END

GAUGE PACKAGE CLUSTER

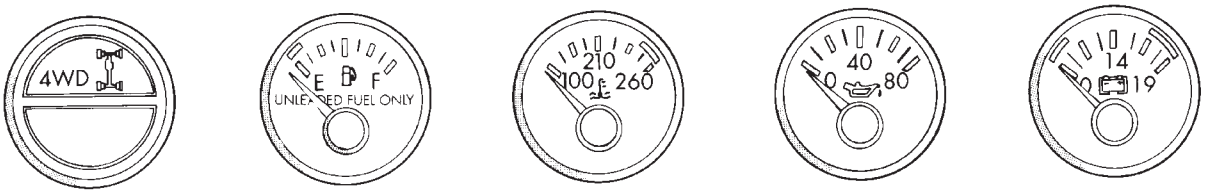

GAUGE PACKAGE CLUSTER
CIRCUIT SCHEMATIC

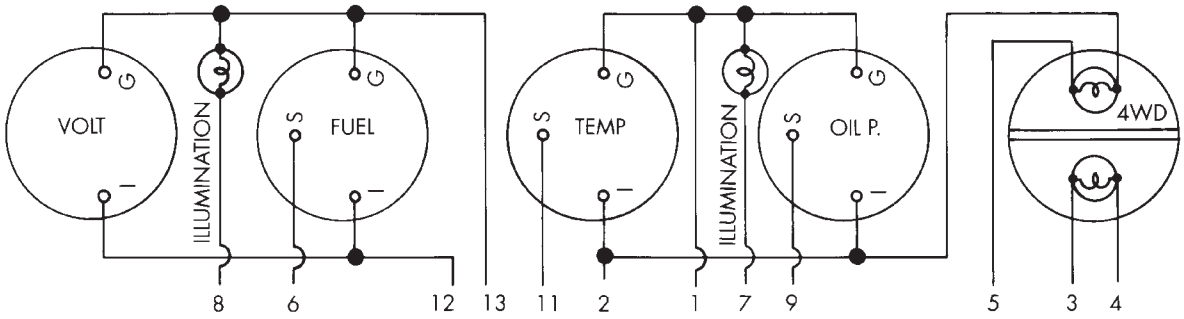

GAUGE PACKAGE CLUSTER
PRINTED CIRCUIT TERMINALS

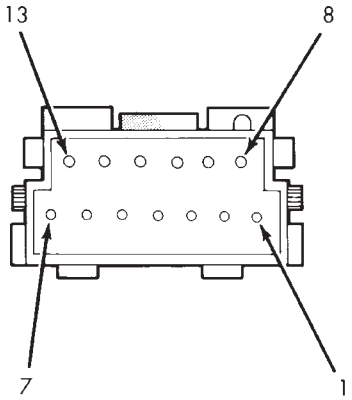

GAUGE PACKAGE CLUSTER
LEGEND

NO.	IDENTIFICATION
1	GROUND
2	IGNITION
3	NOT USED
4	NOT USED
5	FOUR-WHEEL DRIVE
6	FUEL GAUGE
7	ILLUMINATION
8	ILLUMINATION
9	ENGINE OIL PRESSURE
10	NOT USED
11	ENGINE COOLANT TEMP
12	IGNITION
13	GROUND

GAUGE PACKAGE CLUSTER
CONNECTOR

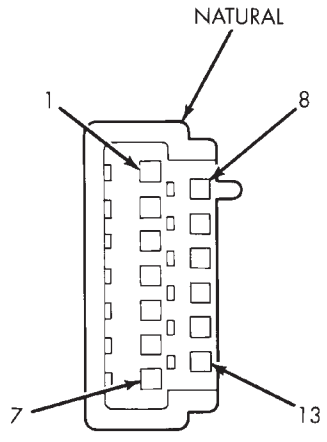

VIEWED FROM TERMINAL END

J958E-14

INDICATOR LAMPS

If an individual indicator lamp is inoperative, see the diagnostic procedure under the heading for that lamp. If more than one indicator lamp or a combination of lamps and gauges in the main cluster or the gauge package cluster is inoperative, see Gauges in this section for diagnosis.

ANTI-LOCK BRAKE SYSTEM LAMP

The diagnosis found here addresses an inoperative lamp condition. If the ABS lamp stays on with the ignition switch in the ON position, or comes on and stays on while driving, refer to Group 5 - Brakes for diagnosis. If no ABS problem is found, the following procedure will help locate a short or open in the ABS lamp circuit.

(1) Disconnect battery negative cable. Remove left instrument cluster bezel and main cluster assembly. Disconnect ABS control module connector.

(2) Install a jumper wire between cavity 6 of cluster connector and a good ground. Connect battery negative cable. Turn ignition switch to ON. Lamp should light. If OK, remove jumper wire and go to next step. If not OK, replace bulb.

(3) Turn ignition switch to OFF. Disconnect battery negative cable and unplug cluster connector. Check for continuity between cavity 6 of cluster connector and a good ground. There should be no continuity. If OK, go to next step. If not OK, repair short circuit as required.

(4) Check continuity between cavity 6 of cluster connector and cavity 52 of ABS control module connector (Fig. 6). There should be continuity. If OK, refer to Group 5 - Brakes for diagnosis of ABS control module. If not OK, repair open circuit as required.

BRAKE WARNING LAMP

The diagnosis found here addresses an inoperative lamp condition. If the brake warning lamp stays on with the ignition switch in the ON position and the parking brake released, refer to Group 5 - Brakes for diagnosis. If no service brake or parking brake problem is found, the following procedure will help locate a short circuit or faulty switch.

(1) Unplug parking brake switch connector. Turn ignition switch to START position. Lamp should light. Release ignition switch to ON position. Lamp should go off. If OK, go to step 10. If not OK, go to next step.

(2) Unplug brake warning switch connector. Install a jumper wire between two cavities of connector. Turn ignition switch to START. Lamp should light. Remove jumper wire and lamp should go off. If OK, replace brake warning switch. If not OK, remove jumper wire and go to next step.

(3) Turn ignition switch to ON position. Install a jumper wire between brake warning switch connector

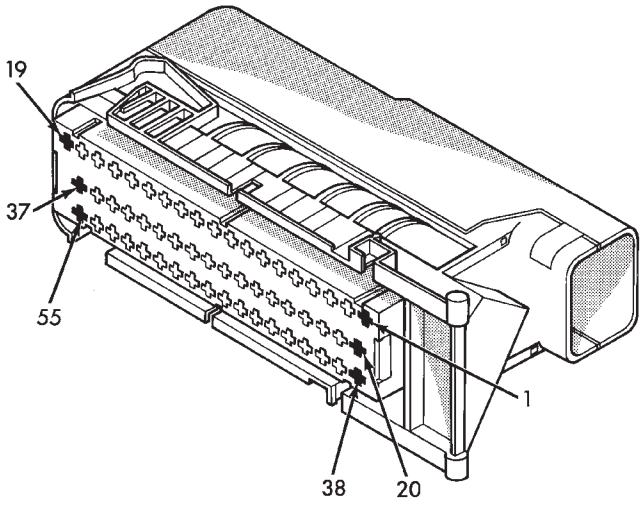

NO.	IDENTIFICATION
52	ANTI-LOCK BRAKE SYSTEM LAMP

J958E-9

Fig. 6 ABS Control Module Connector

cavity for circuit G9 and a good ground. Lamp should light. If OK, go to step 5. If not OK, go to next step.

(4) Turn ignition switch to OFF. Remove jumper wire and disconnect battery negative cable. Remove left instrument cluster bezel and main cluster. Install a jumper wire between cavity 1 of cluster connector and a good ground. Connect battery negative cable and turn ignition switch to ON. Lamp should light. If OK, repair open in circuit to brake warning switch. If not OK, replace bulb.

(5) Turn ignition switch to OFF and remove jumper wire. Disconnect battery negative cable. Check for continuity between brake warning switch connector cavity for circuit G11 and a good ground with ignition switch in START position. There should be continuity. If not OK, go to next step.

(6) Turn ignition switch to OFF and remove jumper wire. Unplug ignition switch connectors. Check for continuity between ignition switch connector cavity for G11 circuit and a good ground. There should be no continuity. If OK, go to next step. If not OK, repair short circuit between ignition switch and brake warning switch connectors as required.

(7) Check for continuity between ignition switch connector cavity for G11 circuit and brake warning switch connector cavity for G11 circuit. There should be continuity. If OK, go to next step. If not OK, repair open circuit as required.

(8) Check for continuity between metal steering column jacket and a good ground. There should be continuity. If OK, go to next step. If not OK, refer to Group 19 - Steering to check steering column ground clip installation.

(9) Turn ignition switch to START position and hold there. Check for continuity between terminal for circuit G11 of ignition switch and a good ground. There should be continuity. If not OK, replace ignition switch.

(10) Unplug brake warning switch connector. Check for continuity between parking brake switch connector and a good ground. There should be no continuity. If OK, go to next step. If not OK, repair short circuit as required.

(11) Check for continuity between parking brake switch connector and brake warning switch connector cavity for circuit G11. There should be continuity. If OK, replace parking brake switch. If not OK, repair open circuit to brake warning switch as required.

FOUR-WHEEL DRIVE INDICATOR LAMP

(1) Apply parking brake, start engine, vehicle in 4WD Lock or 4WD.

(2) Unplug switch and touch harness side of wire to ground. Lamp should light. If OK, check switch operation, replace if bad. If bulb is OK, repair open to indicator.

HEADLAMP HIGH BEAM INDICATOR LAMP

(1) Check that headlamp high beams are functional. If OK, go to next step. If not OK, refer to Group 8L - Lamps for diagnosis of headlamp system.

(2) Disconnect battery negative cable. Remove left instrument cluster bezel and main cluster assembly. Unplug cluster connector. Connect battery negative cable. Turn headlamps on and select high beam. Check for battery voltage at cavity 17 of cluster connector. If OK, replace indicator bulb. If not OK, repair circuit to headlamp dimmer switch as required.

MALFUNCTION INDICATOR LAMP

The diagnosis found here addresses an inoperative lamp condition. If the lamp comes on and stays on with engine running, refer to Group 14 - Fuel System for diagnosis. If no fuel or emission system problem is found, the following procedure will help locate a short or open in the lamp circuit.

(1) Disconnect battery negative cable. Unplug PCM connector. Install a jumper wire from cavity 32 of PCM connector (Fig. 5) to a good ground. Connect battery negative cable. Turn ignition switch to ON. Lamp should light. Remove jumper wire and lamp should go OFF. If OK, refer to Powertrain Diagnostic Procedures to check PCM. If not OK, go to next step.

(2) Turn ignition switch to OFF. Disconnect battery negative cable. Remove left instrument cluster bezel and main cluster assembly. Install a jumper wire from cavity 2 of cluster connector to a good ground. Connect battery negative cable. Turn ignition switch to ON. Lamp should light. If OK, go to next step. If not OK, replace bulb.

(3) Turn ignition switch to OFF. Disconnect battery negative cable. Unplug cluster connector. Check for continuity between cavity 2 of cluster connector and a good ground. There should be no continuity. If OK, go to next step. If not OK, repair short circuit to PCM as required.

(4) Check continuity between cavity 2 of cluster connector and cavity 32 of PCM connector. There should be continuity. If not OK, repair open circuit to PCM as required.

SEAT BELT REMINDER LAMP

(1) Refer to Group 8U - Chime/Buzzer Warning Systems to check chime/buzzer module operation. If OK, go to next step. If not OK, replace chime/buzzer module.

(2) Disconnect battery negative cable. Remove left instrument cluster bezel and main cluster assembly. Unplug cluster connector. Check for continuity between cavity 20 of cluster connector and a good ground. There should be continuity. If OK, plug cluster connector back into cluster and go to next step. If not OK, repair open circuit to ground as required.

(3) Connect battery negative cable. Install a jumper wire between a 12-volt battery feed and cavity 16 of cluster connector. Lamp should light. If OK, go to next step. If not OK, replace bulb.

(4) Disconnect battery negative cable. Unplug chime/buzzer module from fuseblock module. Unplug cluster connector. Check for continuity between cavity 16 of cluster connector and a good ground. There should be no continuity. If OK, go to next step. If not OK, repair short circuit to chime/buzzer module as required.

(5) Check continuity between cavity 16 of cluster connector and cavity for terminal A3 of chime/buzzer module (Fig. 7) in fuseblock module. There should be continuity. If not OK, repair open circuit to chime/buzzer module as required.

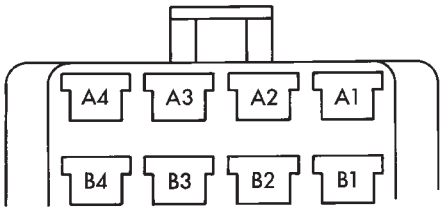

VIEWED FROM TERMINAL END

NO.	IDENTIFICATION
A3	SEAT BELT REMINDER LAMP

J958E-10

Fig. 7 Chime/Buzzer Module Receptacle

TURN SIGNAL INDICATOR LAMPS

(1) Disconnect battery negative cable. Remove left instrument cluster bezel and main cluster assembly. Probe cavity 20 of cluster connector. Check for continuity to a good ground. There should be continuity. If OK, go to next step. If not OK, repair open circuit to ground.

(2) Connect battery negative cable. Install a jumper wire from cavity 18 (left indicator) or cavity 7 (right indicator) of cluster connector to a 12-volt battery feed. Lamp should light. If OK, continue to next step. If not OK, replace bulb.

(3) Disconnect battery negative cable. Check for continuity between cavity 18 (left indicator) or cavity 7 (right indicator) of cluster connector and cavity H (left front turn signal) or cavity J (right front turn signal) of steering column wiring connector. There should be continuity. If OK, refer to Group 8J - Turn Signal and Hazard Warning Systems for further diagnosis. If not OK, repair open circuit as required.

UPSHIFT INDICATOR LAMP

(1) Disconnect battery negative cable. Unplug PCM connector. Connect battery negative cable. Turn ignition switch to ON. Install a jumper wire from cavity 54 of PCM connector (Fig. 5) to a good ground. Lamp should light. Remove jumper from ground. Lamp should go off. If OK, refer to Powertrain Diagnostic Procedures manual to diagnose PCM. If not OK, turn ignition switch to OFF and go to next step.

(2) Disconnect battery negative cable. Remove left instrument cluster bezel and main cluster assembly. Install a jumper wire from cavity 5 of cluster connector to a good ground. Connect battery negative cable. Turn ignition switch to ON. Lamp should light. If OK, go to next step. If not OK, replace bulb.

(3) Turn ignition switch to OFF. Disconnect battery negative cable. Unplug cluster connector. Check for continuity between cavity 5 of cluster connector and a good ground. There should be no continuity. If OK, go to next step. If not OK, repair short circuit as required.

(4) Check for continuity between cavity 5 of cluster connector and cavity 54 of PCM connector. There should be continuity. If not OK, repair open circuit as required.

CLUSTER ILLUMINATION LAMPS

(1) Check fuse 10 in fuseblock module. If OK, go to next step. If not OK, replace fuse.

(2) Turn park lamps on at headlamp switch. Rotate panel dimmer switch thumb-wheel to HI position, just before interior lamps detent. Check for battery voltage at fuse 10 in fuseblock module. Rotate panel dimmer thumb-wheel towards LO position while observing test voltmeter. Reading should go from battery voltage to zero volts. If OK, go to next step. If not OK, repair open circuit to headlamp switch or refer to Group 8L - Lamps to diagnose headlamp switch.

(3) Disconnect battery negative cable. Remove left or center instrument cluster bezel and main or gauge package cluster assembly. Unplug cluster connector. Connect battery negative cable. Turn park lamps on at headlamp switch. Rotate panel dimmer thumb-wheel to HI position, just before interior lamps detent. Check for battery voltage at cavity 21 of main cluster connector, or cavity 7 of gauge package cluster connector. If OK, go to next step. If not OK, repair open circuit to fuse as required.

(4) Turn park lamps off. Disconnect battery negative cable. Remove fuse 10 from fuseblock module. Probe cavity 21 of main cluster connector, or cavity 7 of gauge package cluster connector. Check for continuity to a good ground. There should be no continuity. If OK, go to next step. If not OK, repair short circuit as required.

(5) Probe cavity 20 of main cluster connector, or cavities 1 and 13 of gauge package cluster connector. Check for continuity to ground. There should be continuity. If not OK, repair open circuit as required.

SERVICE PROCEDURES

CLUSTER ASSEMBLY REMOVE/INSTALL

MAIN CLUSTER

(1) Disconnect battery negative cable.

(2) Remove 6 screws from left instrument cluster bezel (Fig. 8).

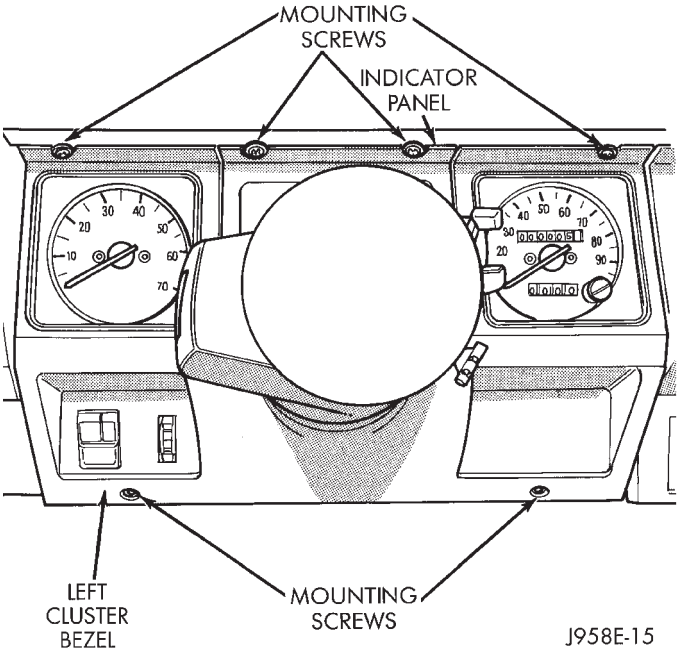

Fig. 8 Left Cluster Bezel Remove/Install

(3) Slide bezel toward steering wheel.

(4) Remove 3 screws holding right side switch panel (Fig. 9).

(5) Remove 3 screws holding left side switch bezel.

(6) Remove 2 screws holding cluster in place.

(7) Lift up top of cluster. Roll cluster out between steering column and instrument panel far enough to reach connector located behind tachometer.

(8) Disconnect cluster connector and remove cluster (Fig. 10).

(9) Reverse removal procedures to install.

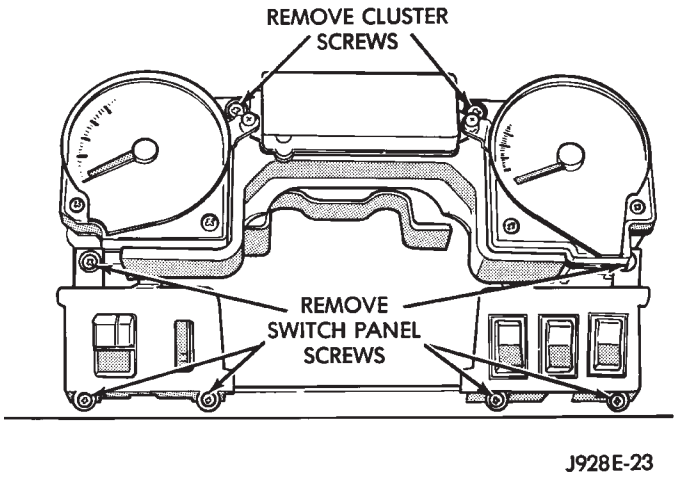

Fig. 9 Main Cluster Remove/Install

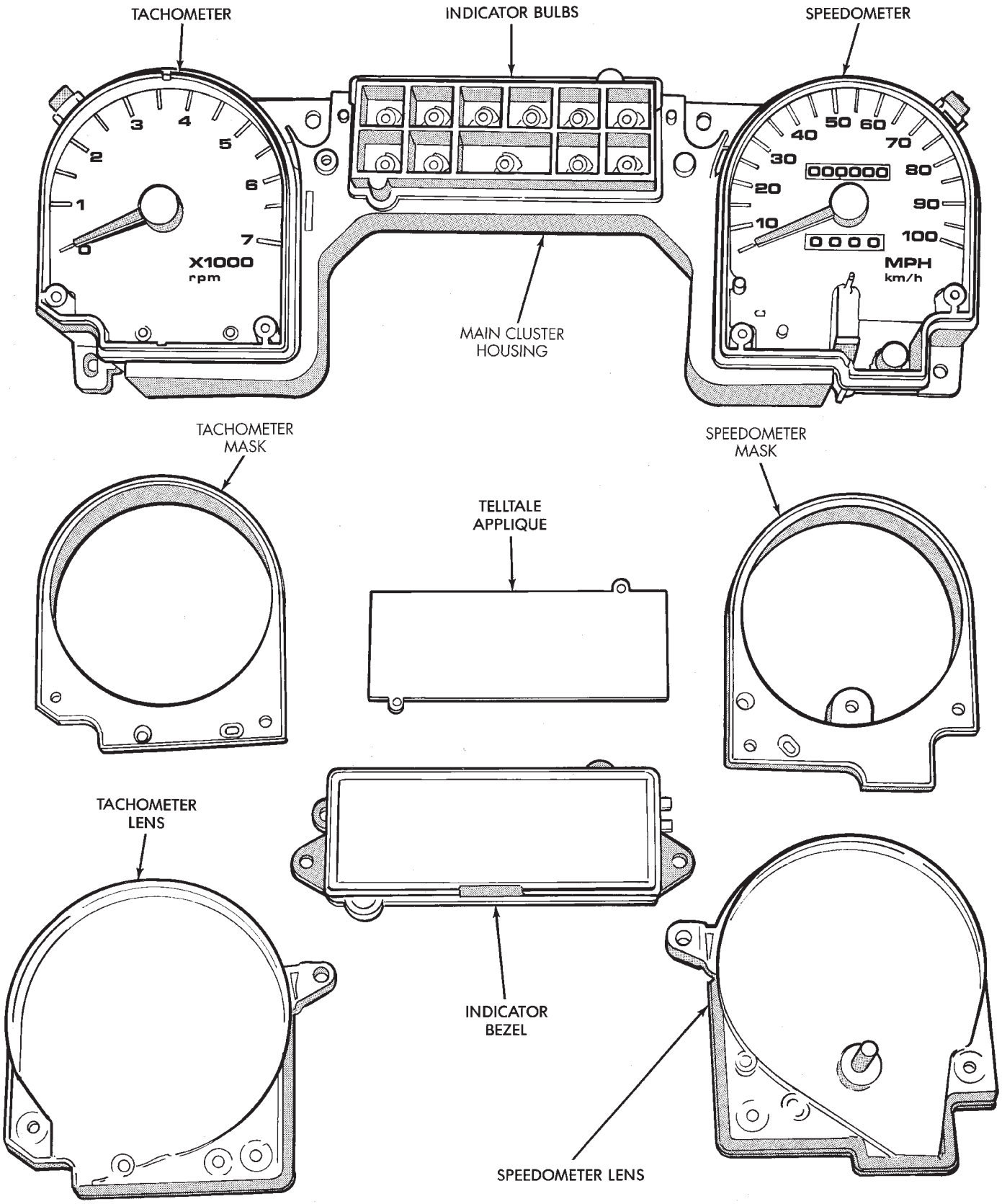

Fig. 10 Main Cluster

GAUGE PACKAGE CLUSTER

(1) Disconnect battery negative cable.

(2) Remove 6 screws from center instrument cluster bezel (Fig. 11).

(3) Remove 6 cluster assembly mounting screws (Fig. 12).

(4) Unplug the connector from cluster.

(5) Reverse removal procedures to install.

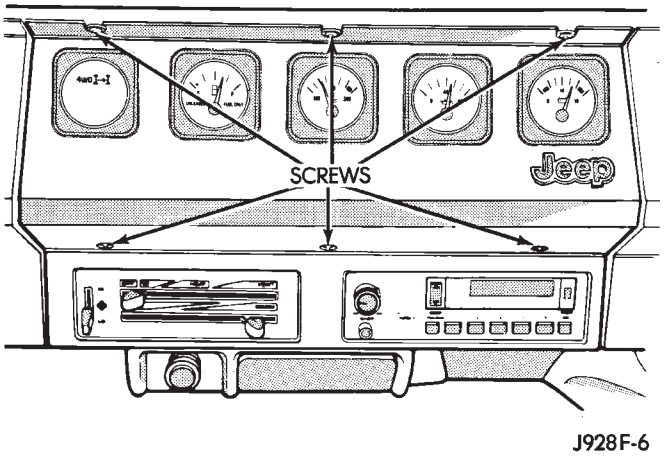

Fig. 11 Center Cluster Bezel Remove/Install

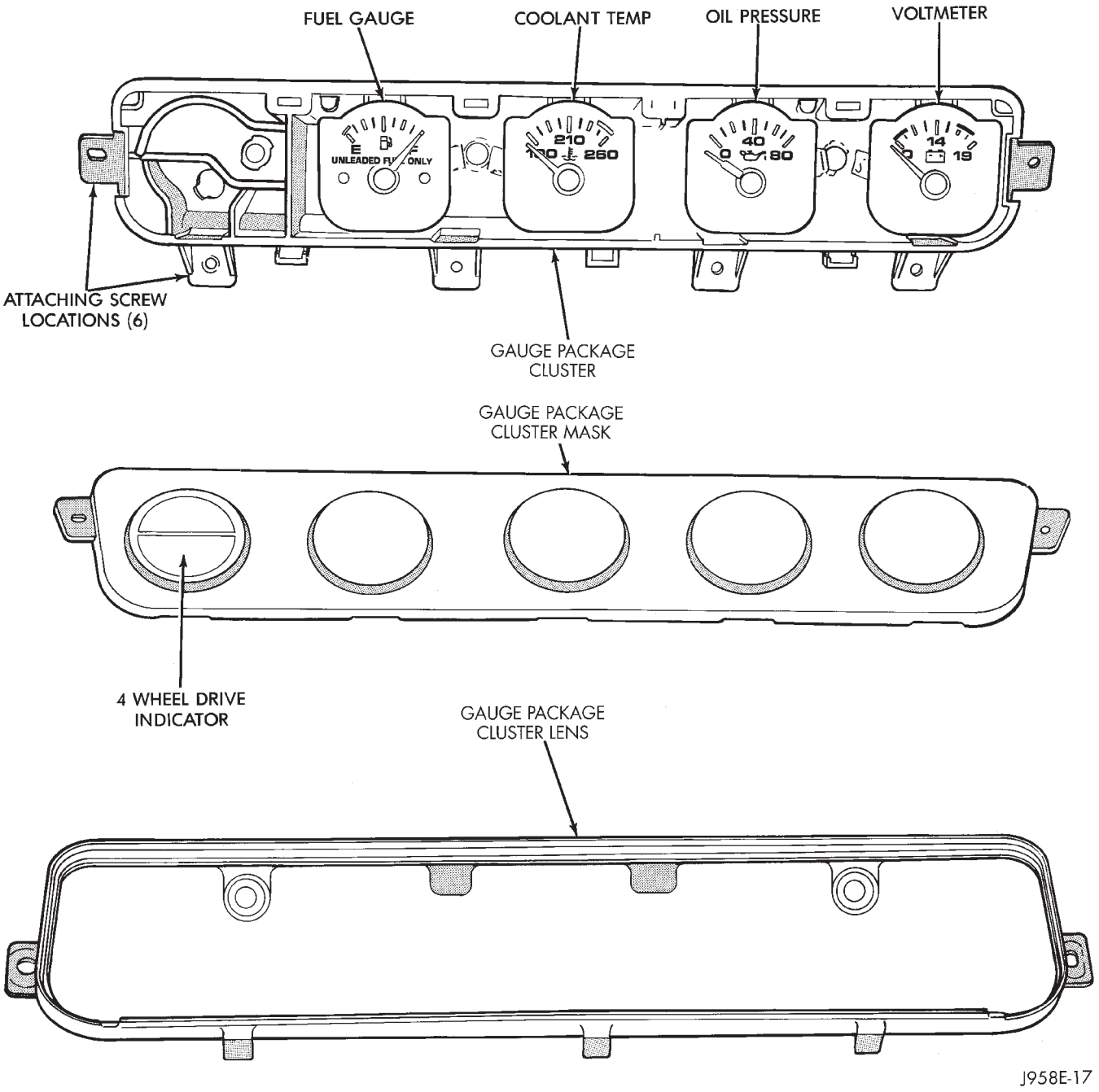

Fig. 12 Gauge Package Cluster

GAUGES REMOVE/INSTALL

MAIN CLUSTER

(1) Remove cluster as described in Cluster Remove/Install.

(2) Remove 3 screws from speedometer or tachometer lens (Fig. 13).

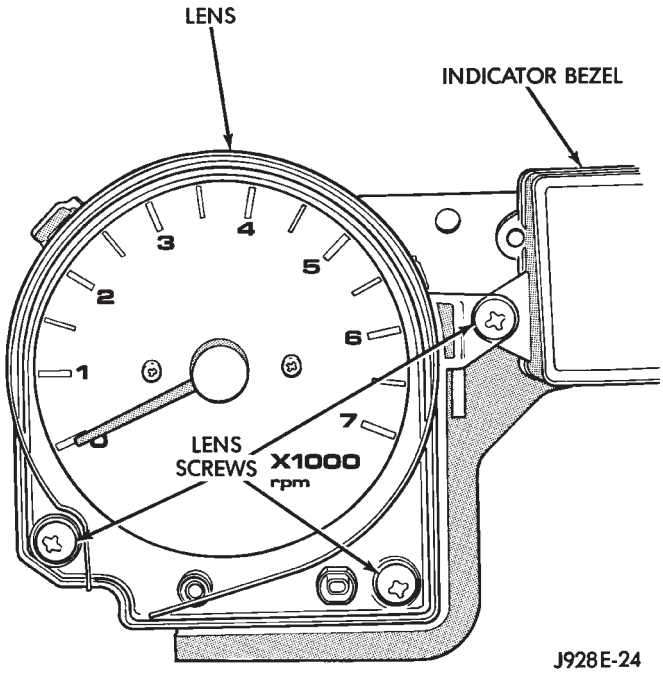

Fig. 13 Gauge Lens - Typical

(3) Gently pry up retaining clip to release lens and mask from cluster (Fig. 14).

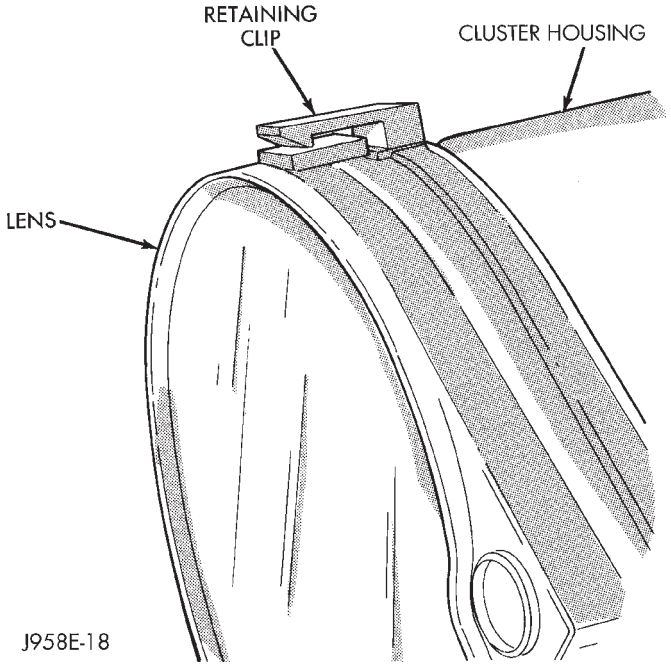

Fig. 14 Lens Retaining Clip

(4) Remove 3 screws that retain gauge from rear of cluster housing (Fig. 15) and remove gauge.

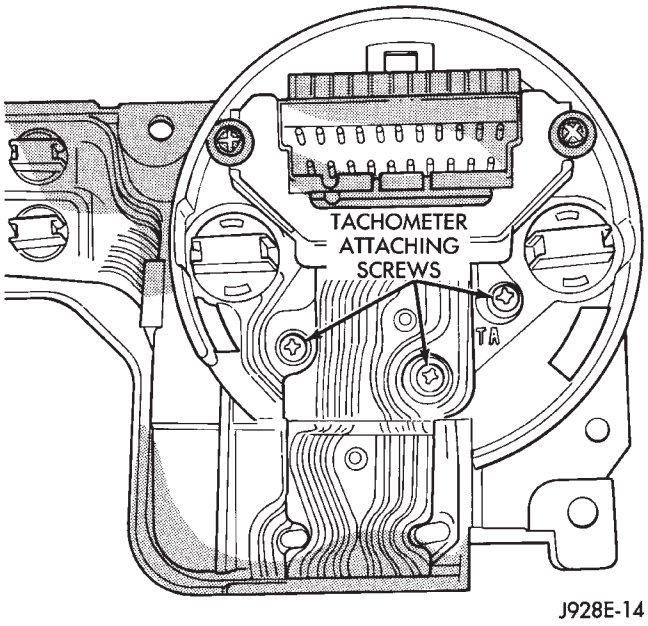

Fig. 15 Gauge Remove/Install

(5) Reverse removal procedures to install.

GAUGE PACKAGE CLUSTER

(1) Remove cluster as described in Cluster Remove/Install.

(2) Remove 2 screws from lens.

(3) Remove lens by tilting off of lower hooks (Fig. 16).

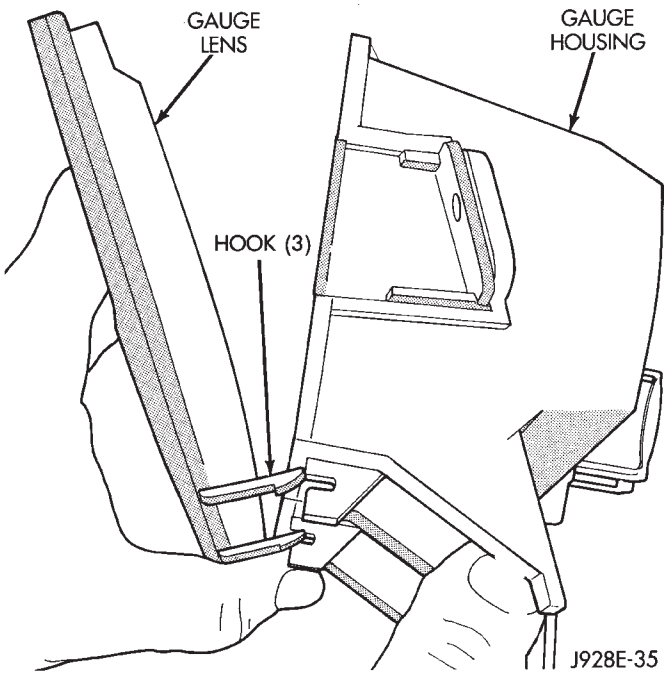

Fig. 16 Gauge Package Lens Remove

(4) Remove gauge mask.

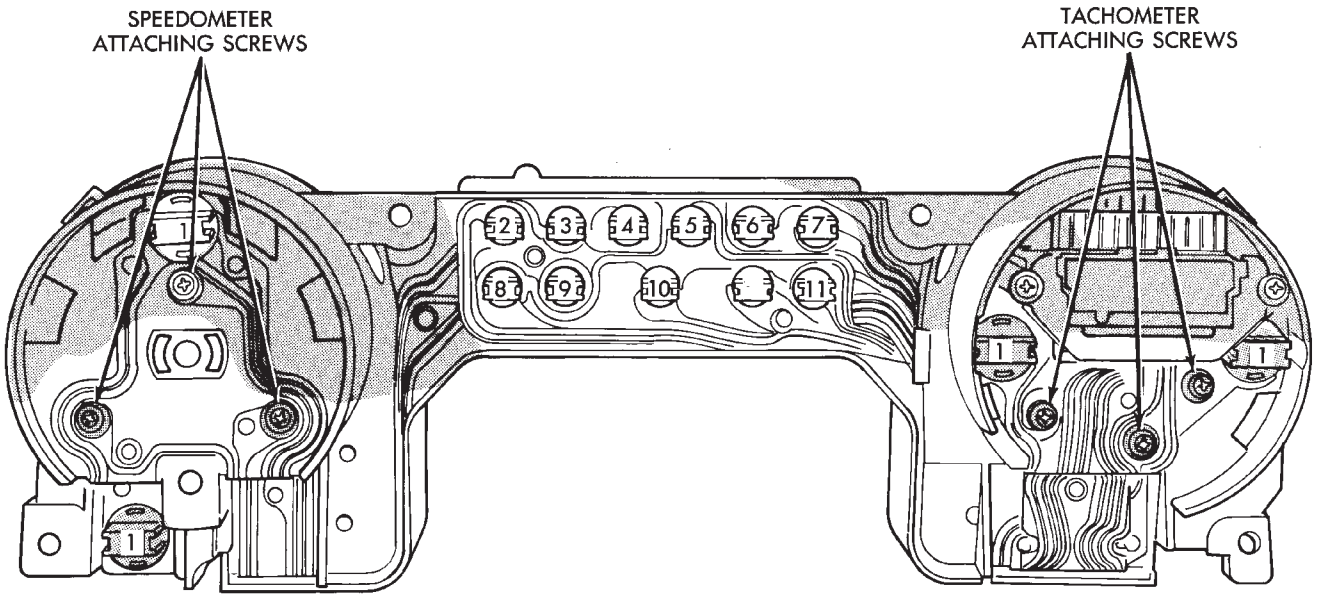

Fig. 17 Printed Circuit Remove/Install

(5) Remove screws that retain gauge from rear of cluster housing and remove gauge.

(6) Reverse removal procedures to install.

PRINTED CIRCUIT REMOVE/INSTALL

MAIN CLUSTER

(1) Remove main cluster as described in Cluster Remove/Install.

(2) Remove gauge lenses and masks as described in Gauges Remove/Install.

(3) Remove all attaching screws for speedometer and tachometer from rear of cluster housing (Fig. 17).

(4) Remove 2 screws holding cluster connector retaining plate to housing (Fig. 18).

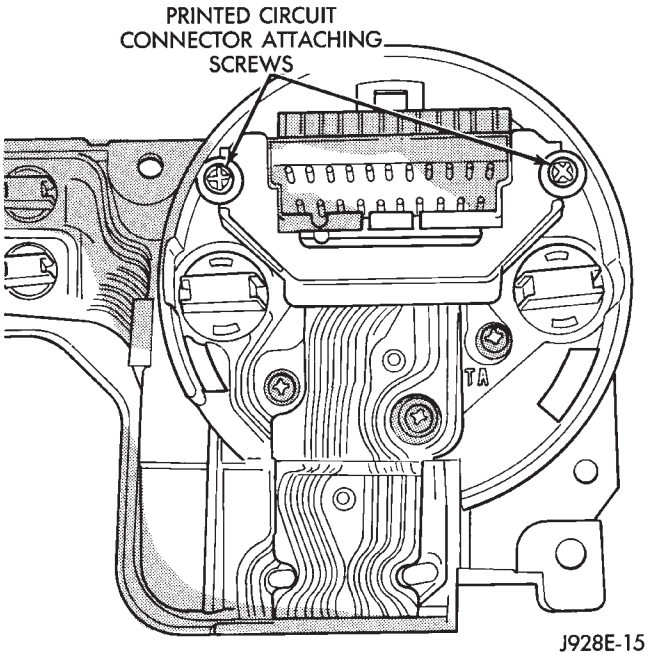

Fig. 18 Printed Circuit Connector Screws

(5) To remove plate, slide it toward bottom of housing (Fig. 19).

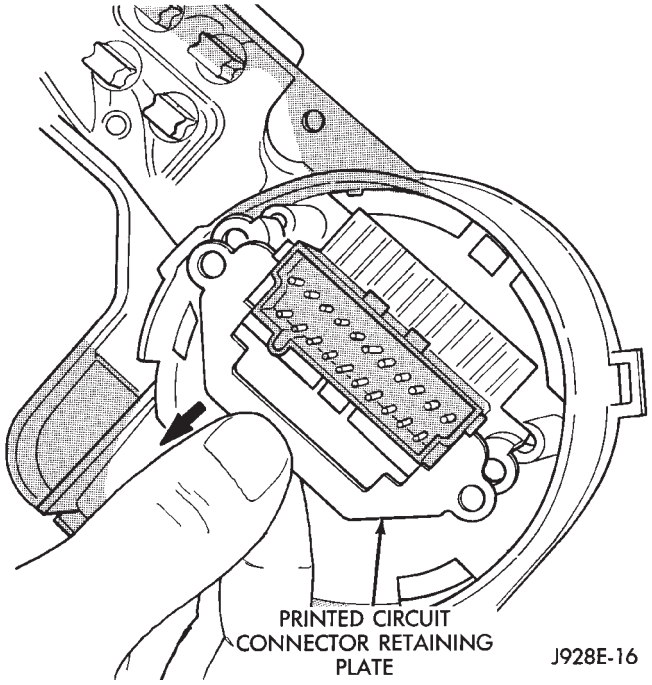

Fig. 19 Cluster Connector Retaining Plate

(6) Remove all lamp holders from printed circuit.
(7) Remove printed circuit including connector.
(8) Reverse removal procedures to install.

GAUGE PACKAGE CLUSTER

(1) Remove gauge package cluster as described in Cluster Remove/Install.
(2) Remove gauge package lens and mask as described in Gauges Remove/Install.
(3) Remove all gauge attaching screws from rear of cluster housing (Fig. 20).
(4) Remove screw holding the cluster connector retaining plate to the housing.
(5) To remove plate, slide it toward the bottom of the housing (Fig. 21).

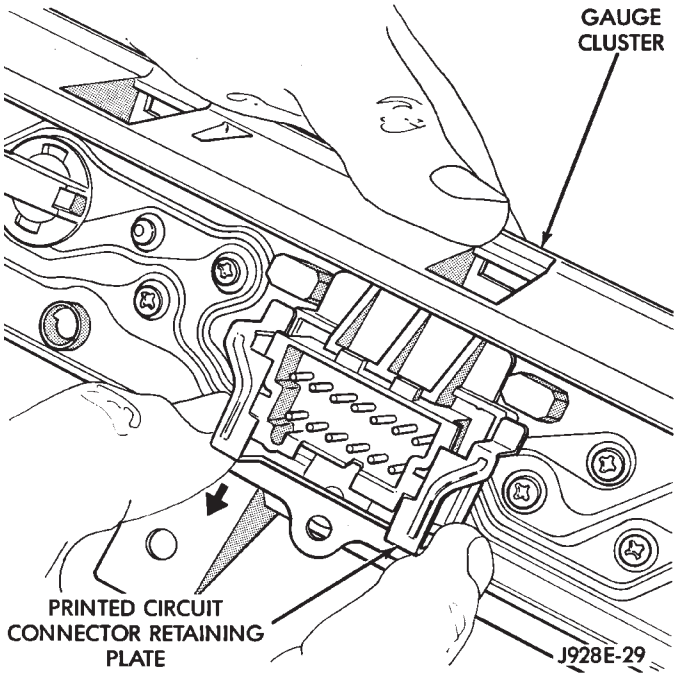

Fig. 21 Cluster Connector Retaining Plate

(6) Remove all lamp holders from the printed circuit.
(7) Remove printed circuit including connector.
(8) Reverse removal procedures to install.

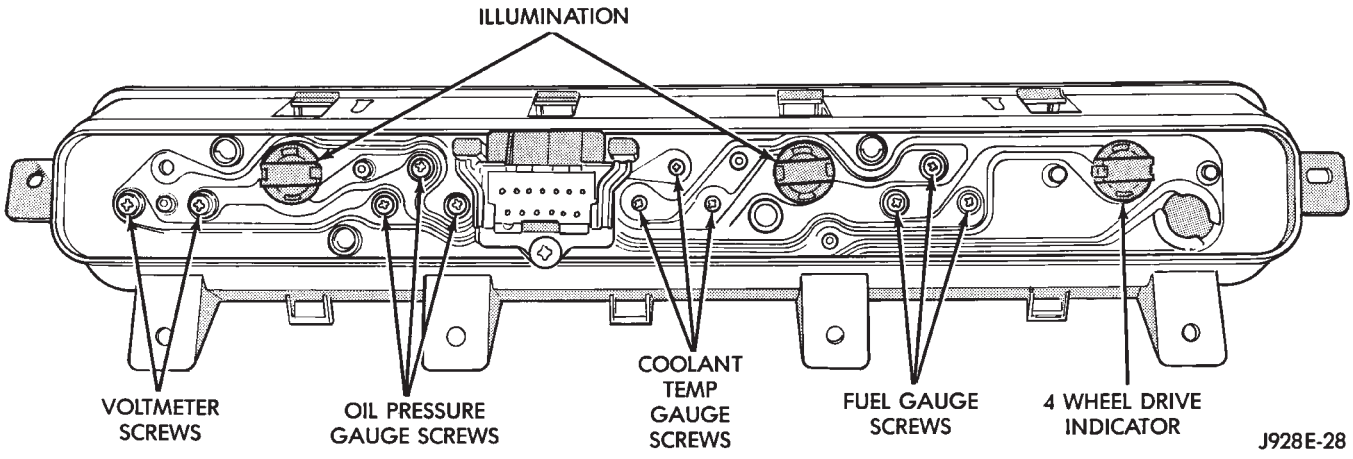

Fig. 20 Gauge Package Printed Circuit Remove/Install

HEADLAMP OR PANEL DIMMER SWITCH REMOVE/INSTALL

(1) Disconnect battery negative cable.

(2) Remove 6 screws from left instrument cluster bezel (Fig. 22).

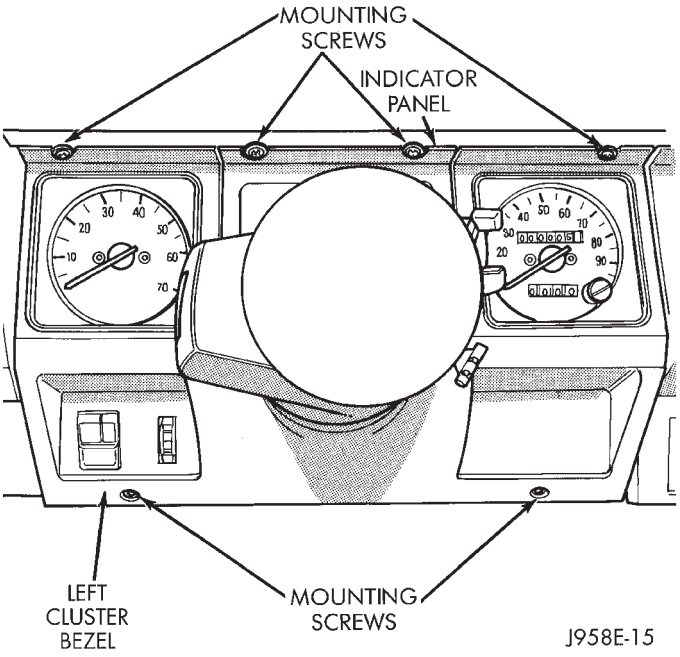

Fig. 22 Left Cluster Bezel Remove/Install

(3) Slide bezel toward steering wheel.

(4) Apply upward force to the bezel and downward force to the indicator panel. This will release the indicator panel holding tabs (Fig. 23).

(5) Remove the bezel from the instrument panel.

(6) Remove the headlamp or panel dimmer switch retaining screws (Fig. 24).

(7) Disconnect the headlamp/panel dimmer switch wire harness connector.

(8) Remove the headlamp/panel dimmer switch from the instrument panel cavity.

(9) Reverse removal procedures to install.

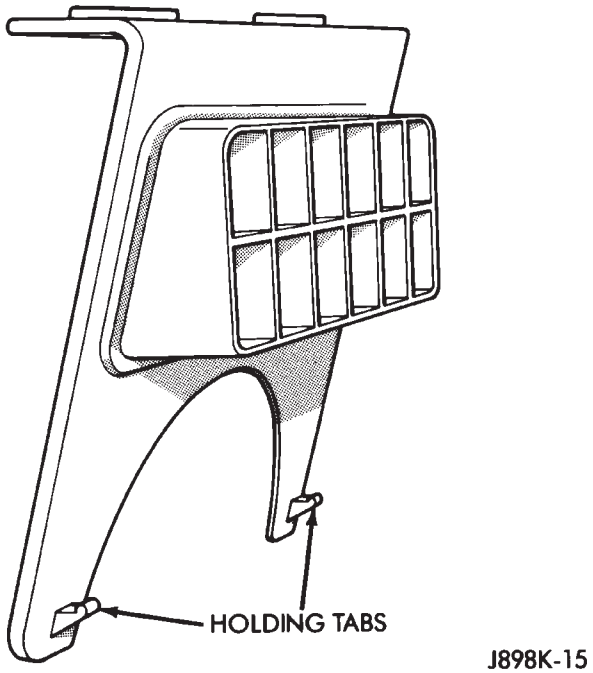

Fig. 23 Indicator Panel Holding Tabs

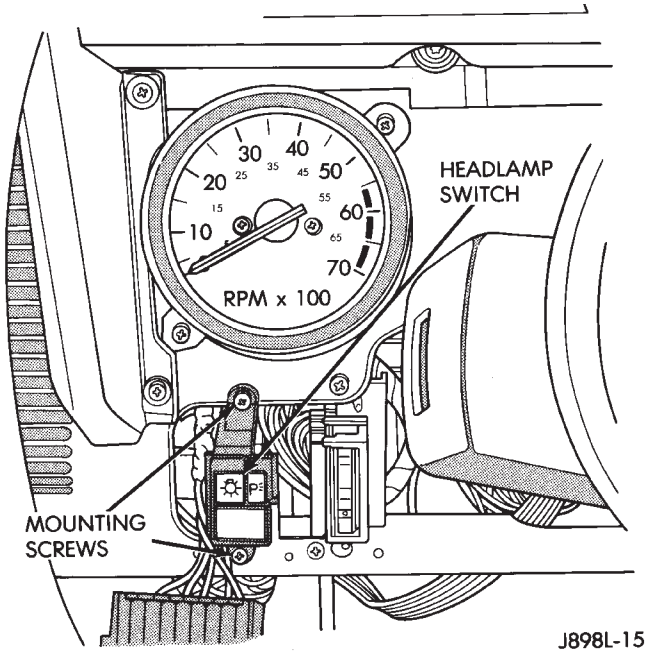

Fig. 24 Headlamp/Panel Dimmer Switch Remove/ Install

SPECIFICATIONS

MAIN CLUSTER

SPEEDOMETER CALIBRATION

ENGINE	FREQUENCY	INDICATION
4 & 6 CYLINDER	44.4 HZ	20 mph +0 −1.5
	122.2 HZ	55 mph +3.3 −0.3
	166.7 HZ	75 mph +3.3 −0.3
	55.2 HZ	40 km/h +6 −0
	110.4 HZ	80 km/h +8 −0
	165.6 HZ	120 km/h +10 −0

TACHOMETER CALIBRATION

ENGINE	FREQUENCY	INDICATION
4 & 6 CYLINDER	33.3 HZ	1000 RPM ±150
	100 HZ	3000 RPM ±250
	200 HZ	6000 RPM ±250

J928E-8

GAUGE PACKAGE CLUSTER

OIL PRESSURE GAUGE CALIBRATION

POINTER POSITION	RESISTANCE
0 psi Grad. ± 3°	1 ohm
40 psi Grad. ± 3.6°	47 ohms
80 psi Grad. ± 3.6°	89 ohms

FUEL GAUGE CALIBRATION

POINTER POSITION	RESISTANCE
Empty Grad. +0° −5°	1 ohm
1/2 Full Grad. ± 3.6°	44 ohms
Full Grad. − 0° +6°	88 ohms

TEMPERATURE GAUGE CALIBRATION

POINTER POSITION	RESISTANCE
100°F Grad. ± 3.5°	1365 ohms
210°F Grad. ± 2.5°	115 ohms
240°F Grad. ± 2.5°	55.1 ohms

VOLTMETER CALIBRATION

POINTER POSITION	VOLTAGE INPUT
12V Grad. ± 6°	12V ± 0.02V
16V Grad. ± 3°	16V ± 0.02V

J928E-5

AUDIO SYSTEMS

CONTENTS

	page		page
DIAGNOSIS	2	SERVICE PROCEDURES	6
GENERAL INFORMATION	1		

GENERAL INFORMATION

Following are general descriptions of major components used in XJ (Cherokee)/YJ (Wrangler) audio systems. Refer to Group 8W - Wiring Diagrams for complete circuit descriptions and diagrams.

RADIOS

Radio options for the XJ and YJ models include an AM/FM stereo or an AM/FM stereo/cassette receiver. Both units are Electronically-Tuned Radios (ETR) and include a clock function. For more information on radio features, setting procedures, and control functions refer to the owner's manual.

IN-LINE FUSE

Each radio receives fused battery feed when the ignition switch is in the ON or ACCESSORY position. There is an additional in-line fuse in the back of the radio chassis. The in-line fuse (Fig. 1) will blow to protect the vehicle electrical system in the event of internal radio failure.

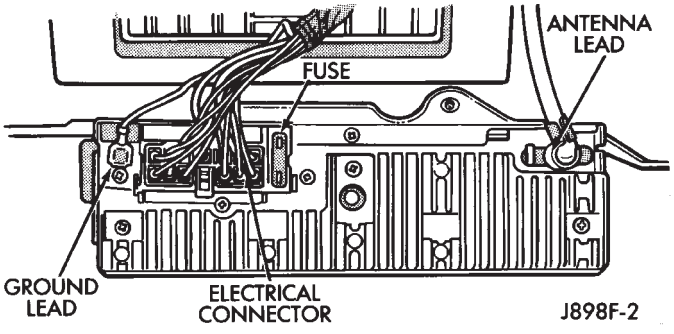

Fig. 1 In-Line Fuse

IGNITION-OFF DRAW FUSE

All vehicles are equipped with an Ignition-Off Draw (IOD) fuse that is removed when the vehicle is shipped from the factory. This fuse feeds various accessories that require current when the ignition switch is in the OFF position, including the clock and radio station preset memory functions. The fuse is removed to prevent battery discharge during vehicle storage.

The IOD fuse should be checked if the radio station preset memory or clock functions are erratic or inoperative. The IOD fuse is located in the Power Distribution Center (PDC). Refer to underside of PDC cover for IOD fuse identification.

RADIO ILLUMINATION RELAY

All radios are connected to a radio illumination relay. The relay controls the source of battery feed for radio/clock display illumination.

When the park and headlamp switch is in the OFF position, the radio illumination relay remains de-energized. The radio/clock display receives full battery voltage through the normally closed contacts of the relay. This results in the radio/clock display being illuminated at full brightness for easier visibility in daylight.

When the park and headlamp switch is in the ON position, the radio illumination relay coil is energized. With the relay coil energized, the normally closed contacts of the relay open, and the normally open contacts of the relay close. This causes the radio/clock display to receive battery feed through the instrument panel dimmer switch. The display illumination brightness can now be adjusted with other panel lamps for night visibility.

SPEAKERS

Speaker system options include two, four or six (XJ only) speaker locations. On XJ model two-speaker systems, one speaker is located in each front door. Four-speaker systems add one speaker at each end of a rear-mounted overhead sound bar. The premium six-speaker option upgrades all the speakers in the above locations, and adds one tweeter at each end of the lower instrument panel.

On YJ model two-speaker systems, one speaker is located at each end of the instrument panel. Four-speaker systems add one speaker at each end of a rear-mounted overhead sound bar.

ANTENNA

All models use a fixed-length stainless steel rod-type antenna mast, installed at the right front (fender on XJ, cowl side on YJ) of the vehicle. The antenna mast is connected to the center wire of the coaxial antenna cable and is not grounded to any part of the vehicle.

To eliminate static, the antenna base must have a good ground. The coaxial antenna cable shield (the outer wire mesh of the cable) is grounded to the antenna base and the radio chassis.

The factory installed ETRs automatically compensate for radio antenna trim. Therefore, no antenna trimmer adjustment is required or possible when replacing the receiver or the antenna.

RADIO NOISE SUPPRESSION

Radio Frequency Interference (RFI) and Electro-Magnetic Interference (EMI) noise suppression is accomplished primarily through circuitry internal to the radio receivers. These internal suppression devices are only serviced as a part of the radio receiver.

External suppression devices that are serviceable and should be checked in the case of RFI or EMI noise complaints include the following:

- radio antenna base ground
- engine-to-body ground strap
- resistor-type spark plugs
- radio suppression-type secondary ignition wiring.

In addition, if the source of RFI or EMI noise is identified as a component on the vehicle (i.e.:generator, blower motor, etc.), the ground path for that component should be checked. If excessive resistance is found in that circuit, repair as required before considering any component replacement.

Fleet vehicles are available with an extra-cost RFI-suppressed Powertrain Control Module (PCM). This unit reduces interference generated by the PCM on some radio frequencies used in two-way radio communications. However, this unit will not resolve complaints of RFI in the commercial AM or FM radio frequency ranges.

DIAGNOSIS

RADIO

CAUTION: Do not operate the radio with speaker leads detached since damage to the transistors may result.

(1) Check fuse 2 in fuseblock module and fuse in back of radio chassis. If OK, go to next step. If not OK, replace fuse.

(2) Turn ignition switch to ON position. Check for battery voltage at fuse 2. If OK, go to next step. If not OK, repair circuit to ignition switch as required.

(3) Turn ignition switch to OFF position. Disconnect battery negative cable. Remove instrument cluster bezel. Remove radio, but do not unplug any connections. Check for continuity between the radio chassis and a good ground. There should be continuity. If OK, go to next step. If not OK, repair radio ground circuit as required.

(4) Connect battery negative cable. Turn ignition switch to ON position. See Radio Connections chart. Check for battery voltage at cavity 3 of radio connector. If OK, go to next step. If not OK, repair circuit to fuse 2 as required.

(5) Turn ignition switch to OFF position. Check for battery voltage at cavity 4 of radio connector. If OK, replace radio. If not OK, repair circuit to IOD fuse in PDC as required.

SPEAKERS

CAUTION: Do not operate the radio with speaker leads detached since damage to the transistors may result.

(1) Turn radio on and adjust balance and fader controls to check performance of each individual speaker. Note the speaker locations that are not performing correctly. Go to next step.

(2) Turn radio off. Disconnect battery negative cable. Remove instrument cluster bezel and remove radio. See Radio Connections chart. Check both the speaker feed and return cavities at radio for continuity to a good ground. There should be no continuity. If OK, go to next step. If not OK, repair wiring circuit as required.

(3) Check resistance between speaker feed and return cavities. Meter should read between 3 and 8 ohms (speaker impedance). If OK, see diagnosis for Radio. If not OK, go to next step.

(4) Unplug speaker wiring connector. Check for continuity between speaker feed cavity at radio and at speaker. Repeat check between speaker return cavity at radio and at speaker. If OK, replace speaker. If not OK, repair wiring circuit as required.

RADIO DIAGNOSIS

CONDITION	POSSIBLE CAUSES	CORRECTION
NO AUDIO	1. Fuse faulty.	1. Check radio fuses in fuseblock module and in radio chassis. Replace fuses, if required.
	2. Radio connector faulty.	2. Check for loose or corroded radio connector. Repair, if required.
	3. Wiring faulty.	3. See Radio Connector illustration, in this group. Check for battery voltage at radio feed cavities. Repair feed circuits, if required.
	4. Ground faulty.	4. Check for continuity between radio chassis and a known good ground. There should be continuity. Repair radio ground, if required.
	5. Radio faulty.	5. Exchange or replace radio, if required.
	6. Speakers faulty.	6. See Speaker Diagnosis, in this group.
NO DISPLAY	1. Fuse faulty.	1. Check radio and panel lamps fuses in fuseblock module. Replace fuse, if required.
	2. Radio connector faulty.	2. Check for loose or corroded radio connector. Repair, if required.
	3. Wiring faulty.	3. See Radio Connector illustration, in this group. Check for battery voltage at radio feed cavities. Repair feed circuits, if required.
	4. Ground faulty.	4. Check for continuity between radio chassis and a known good ground. There should be continuity. Repair radio ground, if required.
	5. Illumination relay faulty.	5. See Radio Illumination Relay diagnosis, in this group. Repair relay circuits or replace faulty relay, if required.
	6. Radio faulty.	6. Exchange or replace radio, if required.
NO MEMORY	1. Fuse faulty.	1. Check ignition - off draw fuse. Replace fuse, if required.
	2. Radio connector faulty.	2. Check for loose or corroded radio connector. Repair, if required.
	3. Wiring faulty.	3. See Radio Connector illustration, in this group. Check for battery voltage at battery feed cavity. Repair circuit, if required.
	4. Radio faulty.	4. Exchange or replace radio, if required.
POOR RADIO RECEPTION	1. Antenna faulty.	1. See Antenna Diagnosis, in this group. Repair or replace antenna, if required.
	2. Ground faulty.	2. Check for continuity between radio chassis and a known good ground. There should be continuity. Repair radio ground, if required.
	3. Radio faulty.	3. Exchange or replace radio, if required.
NO/POOR TAPE OPERATION	1. Faulty tape.	1. Insert known good tape and test operation.
	2. Foreign objects behind tape door.	2. Remove foreign objects and test operation.
	3. Faulty tape deck.	3. Exchange or replace radio, if required.

RADIO CONNECTIONS

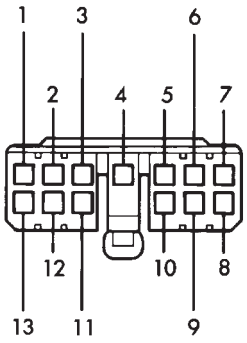

1 — RIGHT REAR SPEAKER FEED
2 — RIGHT FRONT SPEAKER(S) FEED
3 — SWITCHED RADIO BATTERY FEED
4 — UNSWITCHED RADIO BATTERY FEED
5 — NOT USED
6 — LEFT REAR SPEAKER FEED
7 — LEFT FRONT SPEAKER(S) FEED
8 — LEFT REAR SPEAKER RETURN
9 — LEFT FRONT SPEAKER(S) RETURN
10 — CLOCK/RADIO DISPLAY FEED
11 — CONTROL PANEL DIMMER FEED
12 — RIGHT FRONT SPEAKER(S) RETURN
13 — RIGHT REAR SPEAKER RETURN

J958F-1

RADIO ILLUMINATION RELAY

If the relay fails any one of Relay Tests, it is faulty and should be replaced. If the relay passes the Relay Tests, proceed to the Relay Circuit Tests.

On XJ models, the radio illumination relay is located in the relay center (Fig. 2), which is fastened to the lower instrument panel reinforcement behind the lower instrument panel near the steering column. On YJ models, the relay is taped to the instrument panel wiring harness above and to the right of the radio, near the glove box.

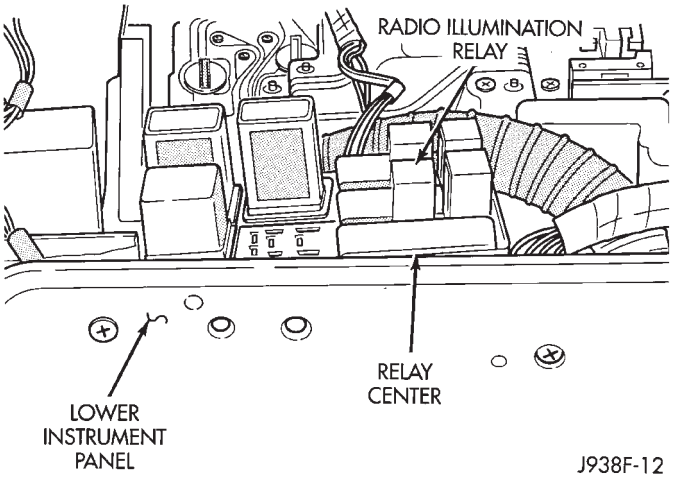

Fig. 2 Radio Illumination Relay - XJ

RELAY TESTS

Remove relay to perform the following tests:

(1) A relay in the de-energized position should have continuity between terminals 87A and 30, and no continuity between terminals 87 and 30.

(2) Resistance value between terminals 85 and 86 (electromagnet) is 75±5 ohms.

(3) Connect a battery to terminals 85 and 86. There should now be continuity between terminals 30 and 87, and no continuity between terminals 87A and 30.

RADIO ILLUMINATION RELAY CONNECTIONS

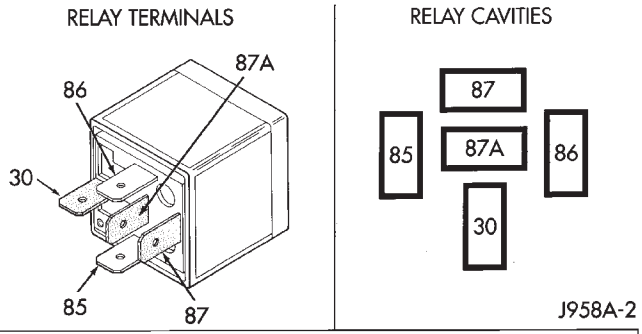

TERMINAL LEGEND	
NUMBER	IDENTIFICATION
30	COMMON FEED
85	COIL GROUND
86	COIL BATTERY
87	NORMALLY OPEN
87A	NORMALLY CLOSED

RELAY CIRCUIT TESTS

With relay still removed, perform the following tests:

(1) The common feed terminal (30) is connected to the radio display feed circuit. There should be continuity between cavity for relay terminal 30 and clock/radio display feed cavity of radio connector at all times. If not, repair circuit as required.

(2) The normally closed terminal (87A) is connected to terminal 30 in the de-energized position. This circuit provides ignition-switched battery voltage to the radio display when the headlamp switch is off. There should be battery voltage present at cavity for relay terminal 87A with the ignition switch in the ON position. If not, repair circuit to ignition switch as required.

(3) The normally open terminal (87) is connected to terminal 30 in the energized position. This circuit provides instrument panel dimmer controlled feed to the radio display when the headlamp switch is on. There should be voltage present at cavity for relay terminal 87 when the headlamp switch is on. Also, the voltage reading should vary as the panel dimmer switch is rotated. If not, repair circuit or panel dimmer switch as required.

(4) The coil battery terminal (86) connected to the electromagnet in the relay. Check as follows:

(a) On YJ models, it is energized when the headlamp switch is on. There should be battery voltage at cavity for relay terminal 86 with the headlamp switch on. If not, repair circuit to headlamp switch as required.

(b) On XJ models, it is grounded at all times. There should be continuity to ground at cavity for relay terminal 86 at all times. If not, repair circuit to ground as required.

(5) The coil ground terminal (85) is connected to the electromagnet in the relay. Check as follows:

(a) On YJ models, it is grounded at all times. There should be continuity to ground at cavity for relay terminal 85 at all times. If not, repair circuit to ground as required.

(b) On XJ models, it is energized when the headlamp switch is on. There should be battery voltage at cavity for relay terminal 85 with the headlamp switch on. If not, repair circuit to headlamp switch as required.

ANTENNA

The following four tests are used to diagnose the antenna with an ohmmeter:

- mast to ground test (Test 1)
- tip-of-mast to tip-of-conductor test (Test 2)
- body ground to battery ground test (Test 3)
- body ground to coaxial shield test (Test 4).

Ohmmeter test lead connections for each test are shown in Figure 3.

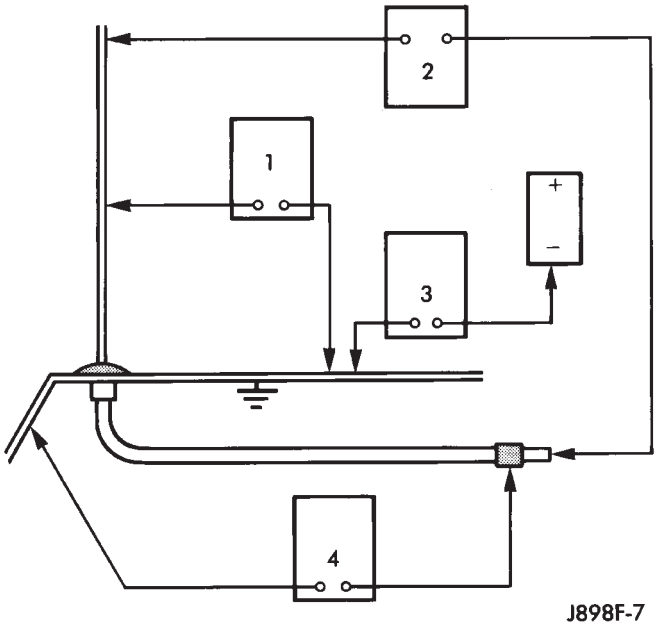

Fig. 3 Antenna Tests

TEST 1

Test 1 determines if the antenna mast is insulated from the base. Proceed as follows:

(1) Disconnect antenna cable lead from radio chassis and isolate.

(2) Connect one ohmmeter lead to tip of antenna mast and the other lead to the antenna base. Check for continuity.

(3) There should be no continuity. If continuity is found, replace defective or damaged antenna base and cable assembly.

TEST 2

Test 2 checks the antenna for an open circuit as follows:

(1) Disconnect the antenna cable lead from the radio chassis.

(2) Connect one ohmmeter test lead to tip of antenna mast. Connect remaining lead to tip of antenna cable lead (the part inserted into the radio).

(3) Continuity should exist (ohmmeter should only register a fraction of an ohm). High or infinite resistance indicates damage to the base and cable assembly. Replace if required.

TEST 3

Test 3 checks condition of the vehicle body ground connection as follows:

(1) Connect one ohmmeter test lead to the vehicle fender and the other lead to the battery negative post.

(2) Resistance should be less than one ohm.

(3) If resistance is more than one ohm, check the braided ground strap connected to the engine and vehicle body for being loose, corroded, or damaged. Repair as necessary.

TEST 4

Test 4 checks condition of the ground between the antenna base and vehicle body as follows:

(1) Connect one ohmmeter test lead to the fender and the other lead to the crimp on the coaxial antenna cable shield.

(2) Resistance should be less then one ohm.

(3) If resistance is more then one ohm:

(a) On YJ models, replace the antenna base attaching screws with new cadmium plated screws.

(b) On XJ models, clean and/or tighten antenna base to fender mounting hardware.

RADIO FREQUENCY INTERFERENCE

Inspect ground connections at:

- blower motor
- electric fuel pump
- generator
- ignition module
- wiper motor
- antenna coaxial ground
- radio ground
- body-to-engine ground strap (braided).

Clean, tighten or repair as required.

Also inspect the following secondary ignition system components:

- spark plug wire routing and condition
- distributor cap and rotor
- ignition coil
- spark plugs.

Reroute spark plug wires or replace components as required.

SERVICE PROCEDURES

RADIO REMOVE/INSTALL - XJ

(1) Disconnect battery negative cable.

(2) Remove upper and lower steering column shrouds and steering column to instrument panel bezel gap hider. If equipped with tilt steering, apply tape to tilt mechanism on top of steering column to protect instrument panel bezel from damage during removal.

(3) Remove 4 instrument panel bezel attaching screws (Fig. 4) and remove the bezel.

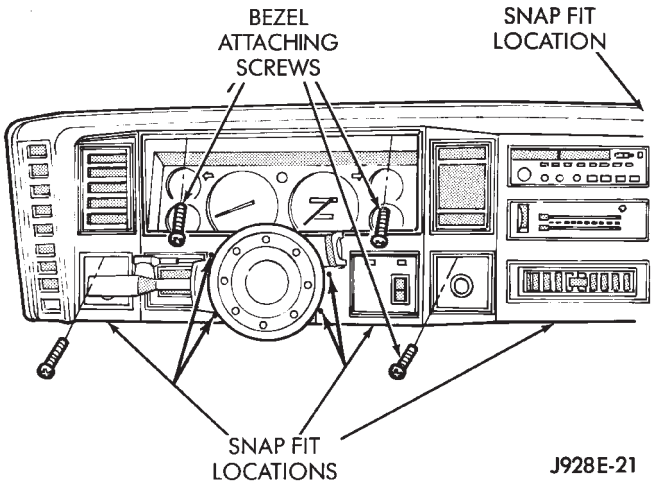

Fig. 4 Instrument Bezel Remove/Install - XJ

(4) Remove 2 radio attaching screws (Fig. 5).

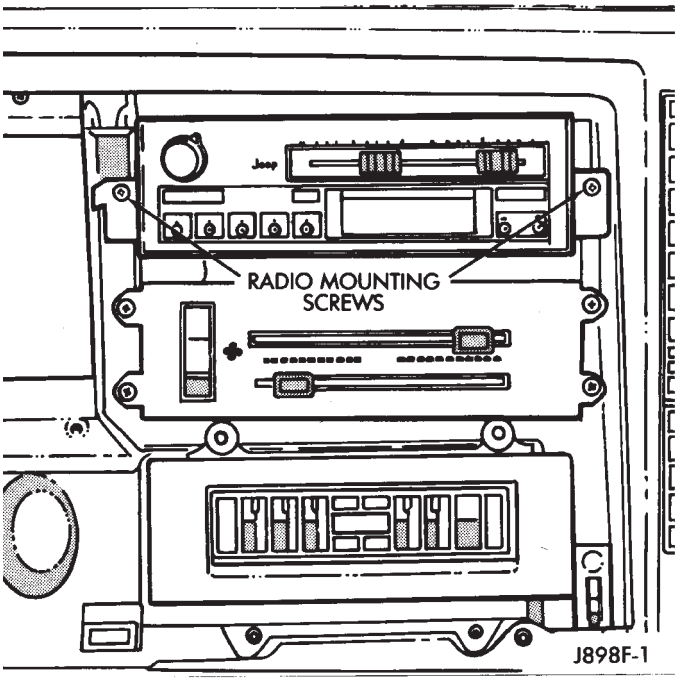

Fig. 5 Radio Mounting Screws Remove/Install - XJ

(5) Slide radio chassis out of instrument panel far enough to disconnect radio electrical connector, ground lead and antenna lead (Fig. 6). Remove radio from instrument panel.

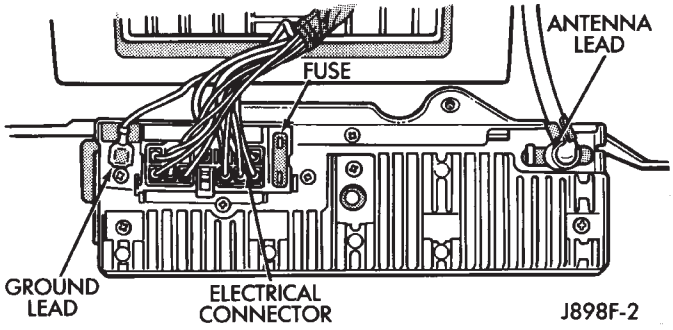

Fig. 6 Radio Wiring Remove/Install - XJ

(6) To install radio, route harness above and to the right of the radio cavity. Make radio harness, ground and antenna connections.

(7) While installing the radio, make sure that clip on top of radio (Fig. 7) is installed in mating slot of instrument panel.

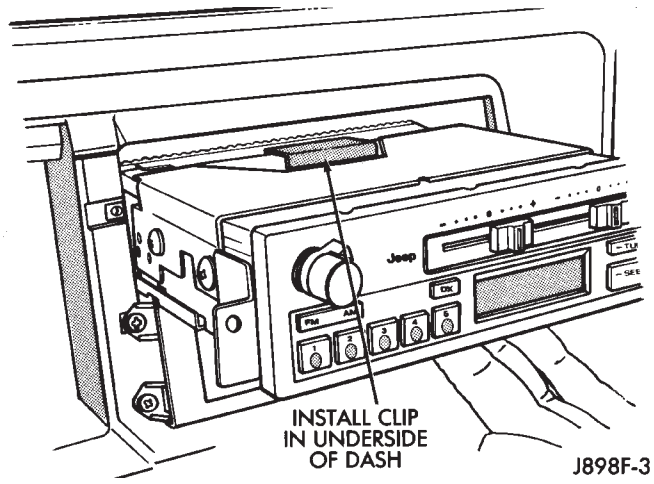

Fig. 7 Radio Clip Install - XJ

(8) Reverse removal procedures to complete installation.

SPEAKERS REMOVE/INSTALL - XJ

INSTRUMENT PANEL

(1) Remove parking brake retaining screw from lower instrument panel (Fig. 8).

(2) Remove retaining screws and the lower instrument panel (Fig. 9).

(3) Unplug wire harness connector.

(4) Remove speaker screws and speaker from lower instrument panel (Fig. 10).

(5) Reverse removal procedures to install.

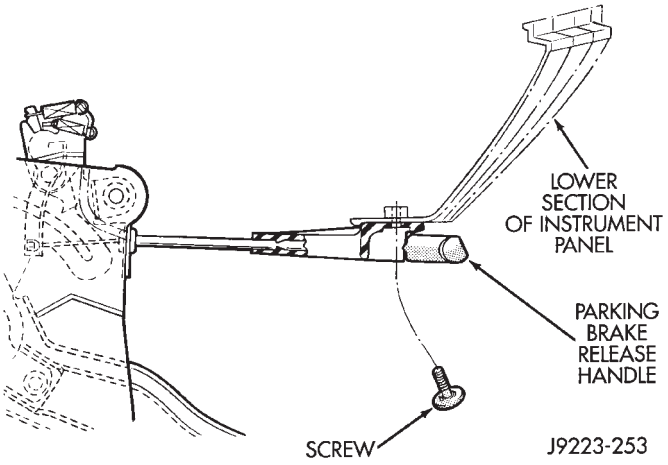

Fig. 8 Parking Brake Remove/Install - XJ

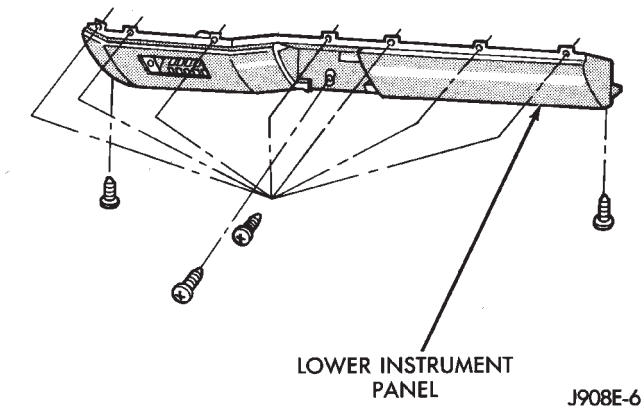

Fig. 9 Lower Instrument Panel Remove/Install - XJ

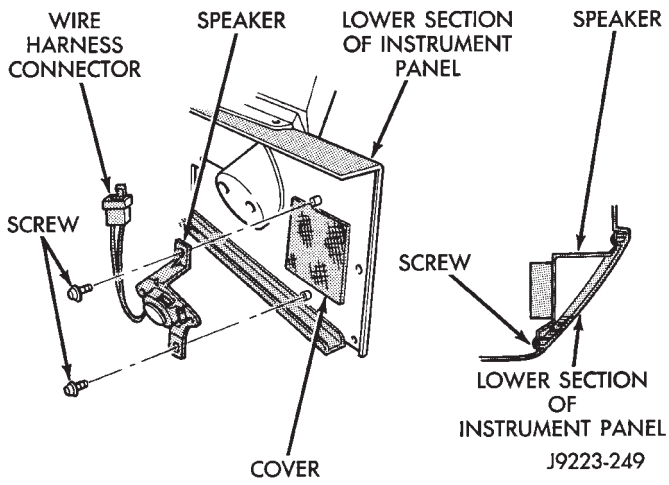

Fig. 10 Instrument Panel Speaker Remove/Install - XJ

FRONT DOOR

(1) Remove interior door latch release assembly and control panel retaining screws (Fig. 11).

(2) Disconnect control linkage and wire harness connector.

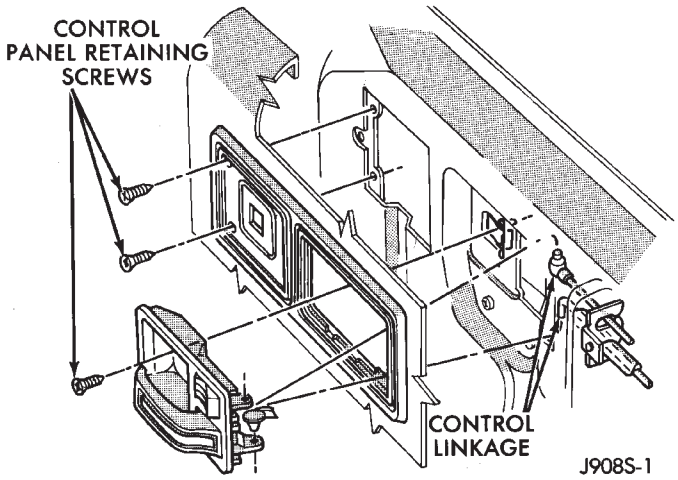

Fig. 11 Control Panel Remove/Install - XJ

(3) Remove latch release and control panel assembly.

(4) Remove armrest lower retaining screws.

(5) Swing armrest downward to a vertical position. This is necessary to disconnect armrest from upper retainer clip (Fig. 12).

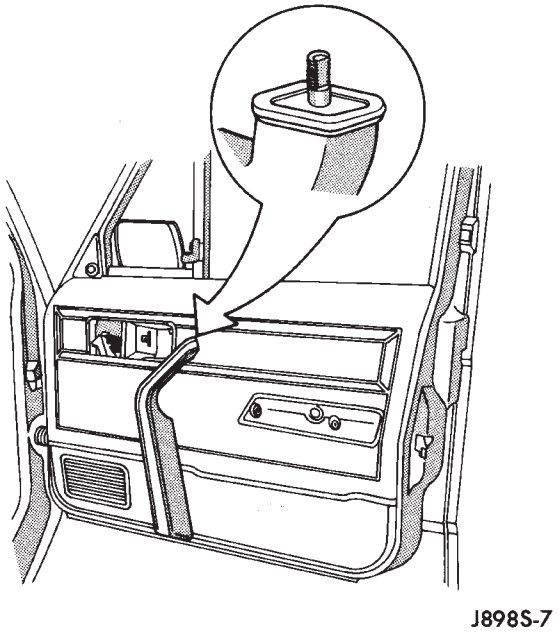

Fig. 12 Armrest Retainer Clip - XJ

(6) Pull armrest straight out from trim panel.

(7) Remove trim panel with a wide, flat-bladed tool (Fig. 13).

To aid in removal of trim panel, start at the bottom of the panel.

(8) Remove speaker attaching screws and disconnect speaker at wire harness.

(9) Reverse removal procedures to install.

SOUND BAR

(1) Disconnect battery negative cable.

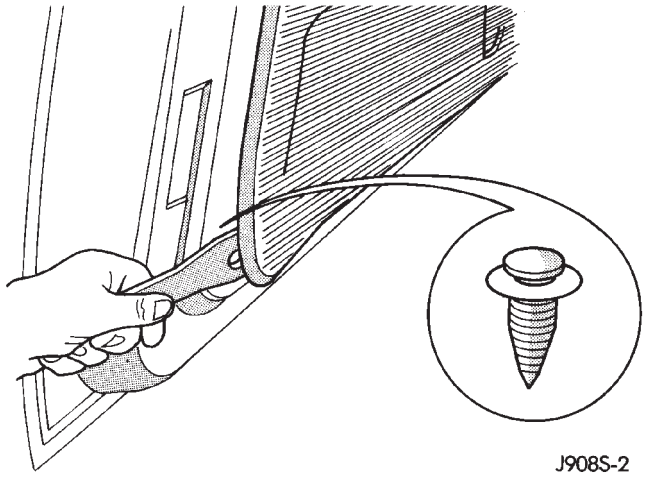

Fig. 13 Trim Panel Remove - XJ

(2) Carefully remove grille from speaker by placing fingertips on outer circumference of grille and gently prying straight down to disengage 4 mounting tabs.

(3) Drill out rivets securing speaker to sound bar.

(4) Lower speaker far enough to unplug wiring from connector.

(5) Reverse removal procedures to install. Use new rivets to secure speaker. Be certain that tabs on speaker grille are inserted through slots in sound bar.

SOUND BAR REMOVE/INSTALL - XJ

(1) Disconnect battery negative cable.

(2) Remove lens from cargo lamp housing.

(3) Remove screws securing left and right rear side roof rail garnish moldings.

(4) Remove left and right rear side roof rail garnish moldings.

(5) Remove 2 push-on retainers from pins inside cargo lamp housing securing sound bar to rear roof bow.

(6) Lower sound bar from roof area and remove from vehicle.

(7) Reverse removal procedures to install. Use 2 new push-on retainers.

ANTENNA REMOVE/INSTALL - XJ

(1) Remove the fender inner splash panel mounting nuts (Fig. 14) and move the panel aside to gain access to the antenna base and cable.

The splash panel screws may be covered with undercoating.

(2) Remove the antenna mast, nut and antenna pad from the top of the fender (Fig. 15).

(3) Remove the passenger side kick panel.

(4) Disconnect the antenna lead (Fig. 16) by pulling apart while twisting the metal connectors. DO NOT PULL ON THE COAXIAL CABLE.

(5) Pull the rubber grommet out of the kick panel.

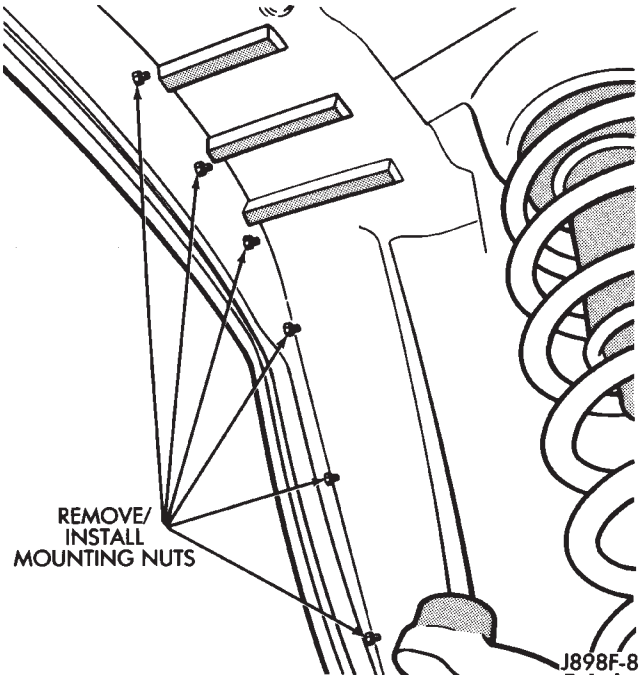

Fig. 14 Fender Inner Splash Panel Remove/Install - XJ

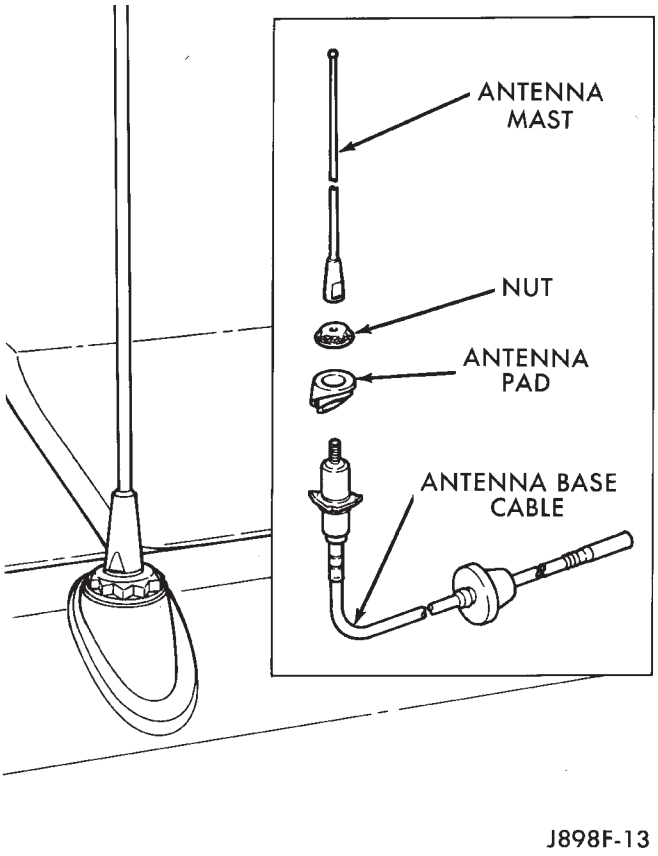

Fig. 15 Nut and Antenna Pad Remove/Install - XJ

(6) Remove the antenna assembly from inside the wheel well.

(7) Reverse removal procedures to install.

(8) Verify antenna and radio operation.

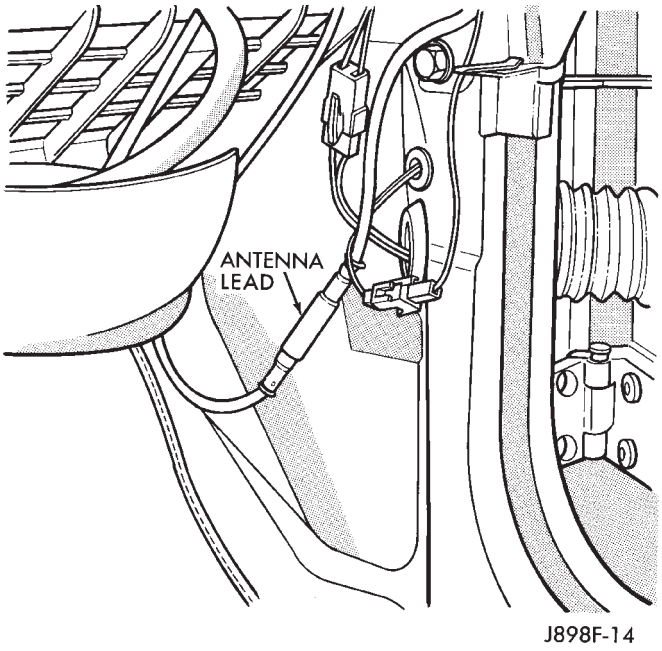

Fig. 16 Disconnect Antenna Lead - XJ

(9) Apply a rubberized undercoating material to the splash panel screws.

RADIO REMOVE/INSTALL - YJ

(1) Disconnect battery negative cable.

(2) Remove center cluster bezel attaching screws (Fig. 17).

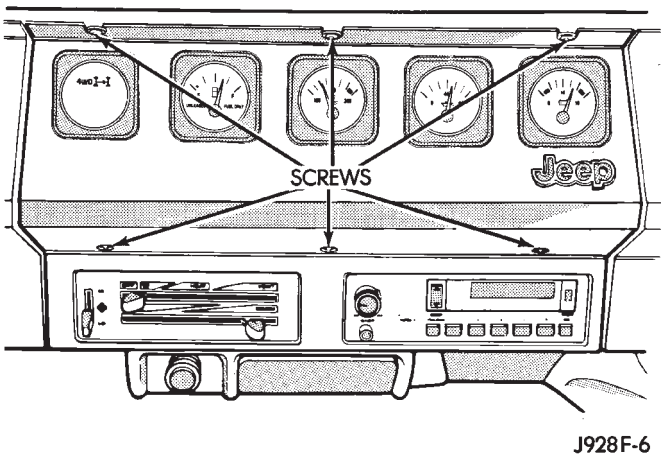

Fig. 17 Center Cluster Bezel Remove/Install - YJ

(3) Remove radio bezel.

(4) Remove radio attaching screws.

(5) Disconnect radio antenna cable.

(6) Disconnect radio wire harness.

(7) Remove radio.

(8) Reverse removal procedures to install.

SPEAKERS REMOVE/INSTALL - YJ

INSTRUMENT PANEL - YJ

RIGHT SIDE

The speaker is located behind grille panel at right end of the instrument panel.

(1) Reach up behind instrument panel and remove 4 stamped nuts holding the speaker in place.

(2) Disconnect speaker electrical connector and remove speaker.

LEFT SIDE

The speaker is located behind grille panel at left end of the dash panel.

(1) Remove nuts that attach the park brake assembly mounting studs to the dash panel. The nuts are accessible from the engine compartment (Fig. 18).

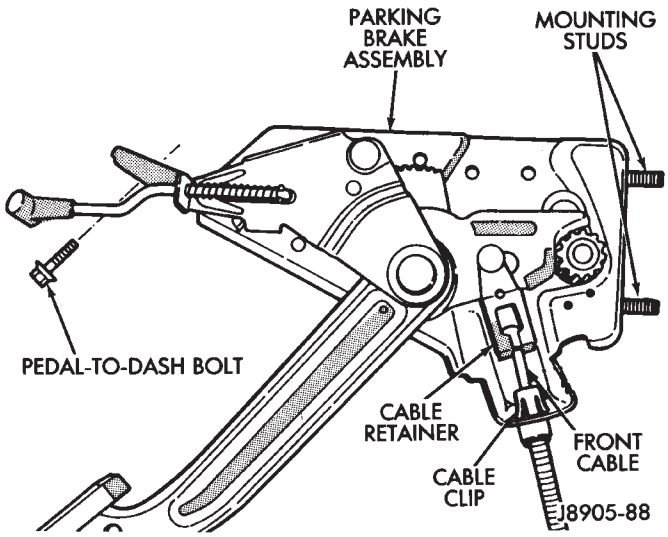

Fig. 18 Park Brake Assembly - YJ

CAUTION: If vehicle is equipped with a rear window wiper, there is a ground wire attached to top of bolt that attaches the park brake assembly to the instrument panel.

(2) Remove bolt that attaches the park brake assembly to the instrument panel and allow assembly to fall out of the way.

(3) Reach up behind instrument panel and remove 4 stamped nuts holding speaker in place.

(4) Disconnect speaker electrical connector and remove speaker.

(5) Reverse removal procedures to install.

SOUND BAR - YJ

(1) Pull sound bar padding away from bar on the passenger side (Fig. 19).

(2) Disconnect speaker harness connector located on the passenger side at the sound bar.

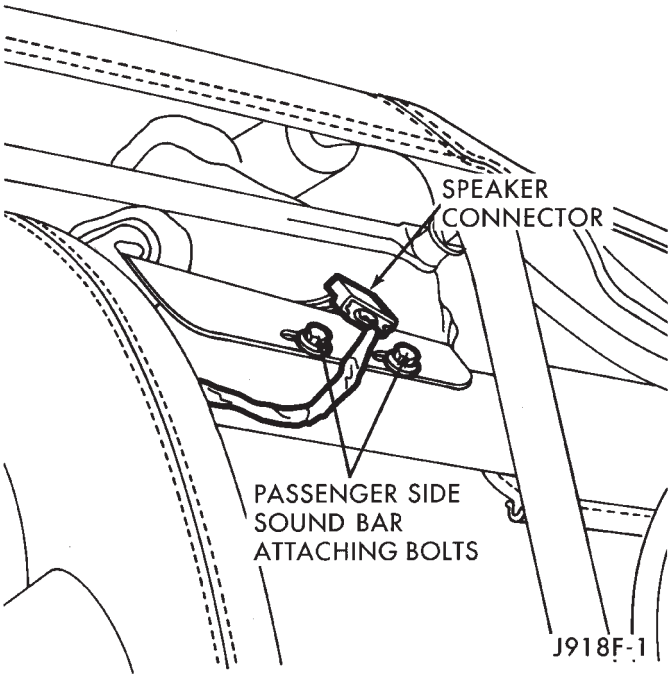

Fig. 19 Sound Bar Speaker Connector - YJ

(3) Remove screws holding speaker grille and speaker to bar.

(4) Disconnect wires from speaker and remove speaker.

(5) Reverse removal procedures to install.

SOUND BAR REMOVE/INSTALL - YJ

(1) Disconnect speaker harness connector located on the passenger side at the sound bar (Fig. 19)

(2) Remove bolts attaching the sound bar side flanges to the right and left side bars.

(3) Open zipper on sport bar cover.

(4) Remove bolts attaching the sound bar brackets to the sport bar (located on the rear of the sport bar) (Fig. 20). Slip brackets through the sport bar cover.

(5) Reverse removal procedures to install.

ANTENNA REMOVE/INSTALL - YJ

(1) Remove the radio. See Radio Remove/Install, in this group for procedures.

(2) Remove three screws holding the antenna base and pad to the body (Fig. 21).

(3) Pull the antenna and cable out of the vehicle.

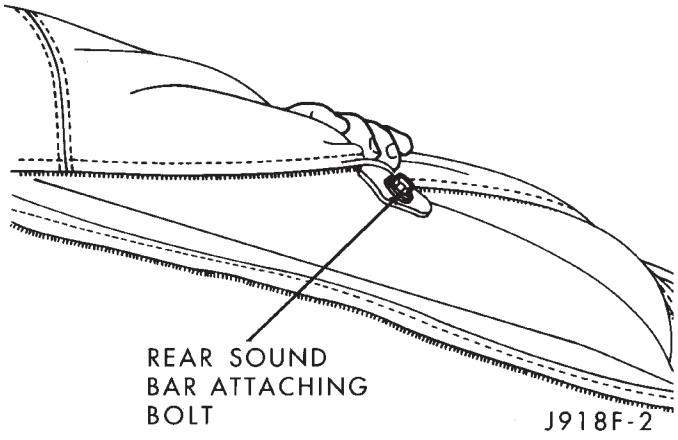

Fig. 20 Sound Bar Attaching Bolt - YJ

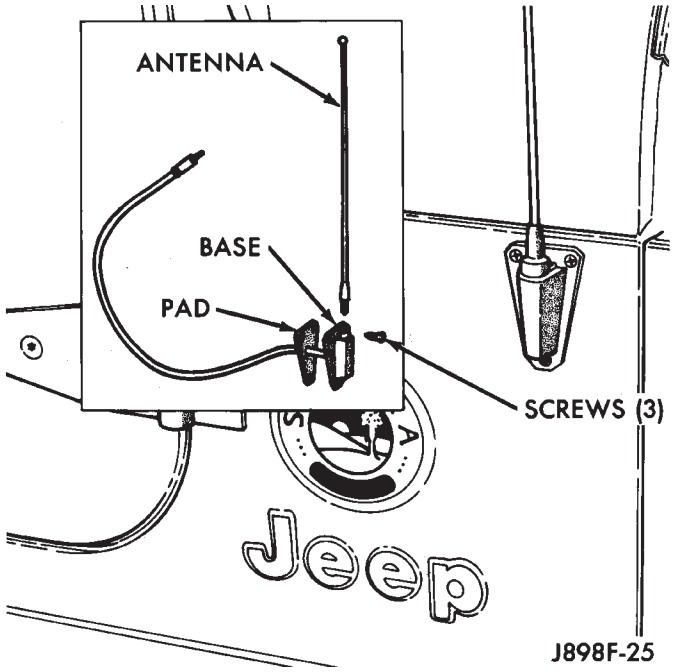

Fig. 21 Antenna Remove/Install - YJ

(4) To install the antenna, make sure the antenna pad is placed over the cable and guide the cable under the instrument panel.

(5) Secure the antenna base and pad with three screws.

(6) Install the antenna lead into the radio and install the radio.

HORNS

CONTENTS

	page		page
DIAGNOSIS	2	SERVICE PROCEDURES	3
GENERAL INFORMATION	1	SPECIFICATIONS	5

GENERAL INFORMATION

Following are general descriptions of the major components in the XJ (Cherokee)/YJ (Wrangler) horn systems. Refer to Group 8W - Wiring Diagrams for complete circuit descriptions and diagrams.

HORN SWITCH

XJ

Two horn switches are installed in the steering wheel, one on each side of the center-mounted driver's airbag module. When either switch is depressed it completes a circuit to ground for the coil side of the horn relay. The steering wheel and steering column must be properly grounded for the horn switches to function. The horn switches are only serviced as a set with their wiring. If either switch should fail, both switches must be replaced.

YJ

A single switch is installed in the center of the steering wheel, directly under the horn button. When the horn button is depressed the switch completes a circuit to ground for the coil side of the horn relay. The steering wheel and steering column must be properly grounded for the horn switch to function. The horn switch is available for service.

HORN RELAY

On XJ models, the horn relay is a mini-relay installed in the relay center, which is mounted to the lower instrument panel reinforcement inboard of the steering column. On YJ models, the horn relay is a ISO relay installed in the Power Distribution Center (PDC) near the battery tray. Refer to underside of PDC cover for relay identification.

One side of the horn relay electromagnetic coil receives battery voltage at all times. When a horn switch is depressed, the other side of the relay coil is grounded. The energized relay coil causes the normally open relay contacts to close, providing battery voltage to the horn.

If a problem is encountered with a continuously sounding horn, it can usually be quickly resolved by removing the horn relay until further diagnosis is completed.

HORNS

On YJ models, a standard single, low-note, diaphragm-type horn is mounted and grounded to the left inner fender shield under the hood. Dual horns are standard equipment on XJ models. The high-note diaphragm-type horn is mounted and grounded to the left radiator closure panel brace behind the front bumper. The low-note diaphragm-type horn is connected in parallel with the high-note horn and is mounted and grounded to the right radiator closure panel brace behind the front bumper.

On XJ models, a cadmium-plated screw is used to attach the horns to the body. Do not substitute other types of screws as they may become corroded and cause a loss of ground.

DIAGNOSIS

WARNING: ON VEHICLES EQUIPPED WITH AN AIRBAG, REFER TO GROUP 8M - RESTRAINT SYSTEMS BEFORE ATTEMPTING STEERING WHEEL COMPONENT DIAGNOSIS OR SERVICE. FAILURE TO TAKE PROPER PRECAUTIONS COULD RESULT IN ACCIDENTAL AIRBAG DEPLOYMENT AND POSSIBLE PERSONAL INJURY.

(1) Inspect fuses (F8 and F16 in PDC on YJ)(11 in fuseblock module and F14 in PDC on XJ). Replace fuses, as required.

(2) Remove the horn relay (in the PDC on YJ)(in the relay center on XJ). See Horn Relay Connections-XJ (Fig. 1) or Horn Relay Connections-YJ (Fig. 2) and perform the following tests.

- The common feed terminal (30) is connected to battery voltage and should be hot at all times. If battery voltage is not present at relay cavity 30, check circuit to fuse (F16 on YJ)(11 on XJ). Repair as required.
- The normally closed terminal (87A) is connected to terminal 30 in the de-energized position, but is not used for this application.
- The normally open terminal (87) is connected to the common feed terminal (30) in the energized position. This terminal supplies battery voltage to the horn. There should be continuity between relay cavity 87 and the horn terminal at all times. If not, repair wiring or connections as required.
- The coil battery terminal (86) is connected to the electromagnet in the relay, and battery voltage should be present at all times. If battery voltage is not present at relay cavity 86, check circuit to fuse (F16 on YJ)(11 on XJ). Repair as required.
- The coil ground terminal (85) is connected to the electromagnet in the relay. It is grounded when the horn switch is depressed. Check for continuity to ground at relay cavity 85 with the horn switch depressed. If no continuity is found with horn switch depressed or, if continuity is found with horn switch released, repair horn switch or wiring as required. See Horn Switch Remove/Install in this group for service procedures.

If all relay connections check OK, proceed to next step.

(3) With the horn relay still removed, check the horn relay by performing the following tests.

- A relay in the de-energized position should have continuity between terminal 87A and terminal 30, and no continuity between terminal 87 and terminal 30.
- Resistance value between terminals 85 and 86 (electromagnet) is 75±5 ohms.

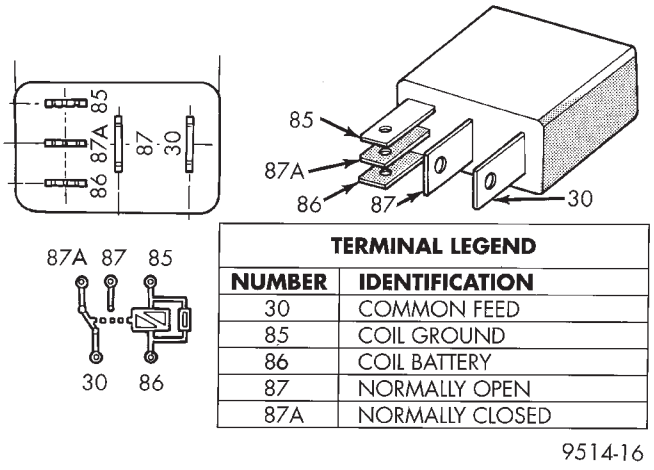

TERMINAL LEGEND	
NUMBER	**IDENTIFICATION**
30	COMMON FEED
85	COIL GROUND
86	COIL BATTERY
87	NORMALLY OPEN
87A	NORMALLY CLOSED

9514-16

Fig. 1 Horn Relay Connections-XJ

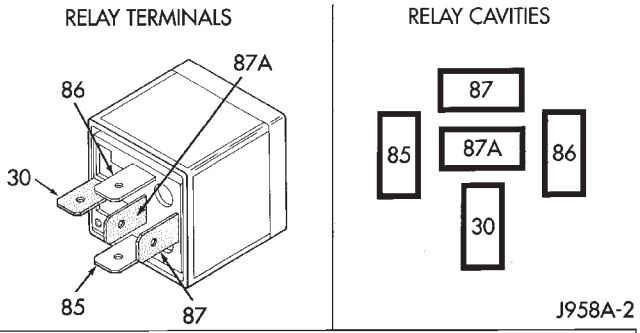

TERMINAL LEGEND	
NUMBER	IDENTIFICATION
30	COMMON FEED
85	COIL GROUND
86	COIL BATTERY
87	NORMALLY OPEN
87A	NORMALLY CLOSED

Fig. 2 Horn Relay Connections-YJ

- Connect a battery to terminals 85 and 86. There should now be continuity between terminal 87 and terminal 30.

If relay fails any of the above tests, replace faulty relay. If relay checks OK, reinstall and proceed to next step.

(4) Disconnect wiring at horn terminal. Depress horn switch. There should be battery voltage at the horn wiring connector. If not, repair wiring to relay. If OK, proceed to next step.

(5) Measure the resistance between the horn bracket and a good chassis ground. The meter should read zero ohms. If not, clean and tighten ground connection between horn mounting screw and bracket. If OK, replace faulty horn(s).

SERVICE PROCEDURES

HORN REMOVE/INSTALL

XJ

(1) Raise and support the vehicle.
(2) Remove the front underbody splash shield.
(3) Remove horn mounting bolt and horn (Fig. 3).

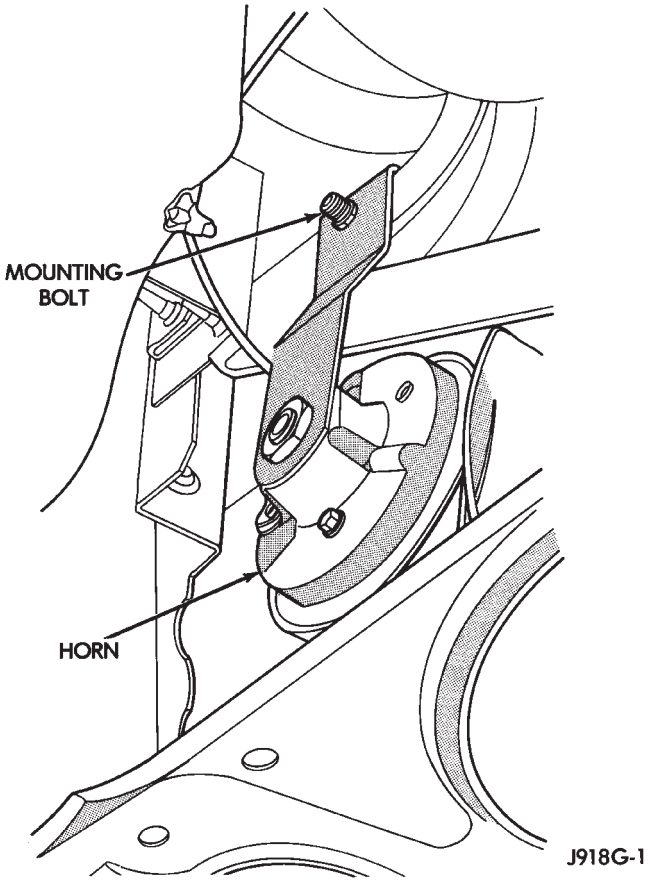

Fig. 3 Horn Mounting - XJ

(4) Remove wire from horn.
(5) Reverse removal procedures to install.

YJ

(1) Disconnect wire harness connector from the horn (Fig. 4).
(2) Remove horn and bracket mounting bolt. Horn and bracket are removed as an assembly.
(3) Reverse removal procedures to install.

HORN SWITCH REMOVE/INSTALL

WARNING: ON VEHICLES EQUIPPED WITH AN AIRBAG, REFER TO GROUP 8M - RESTRAINT SYSTEMS BEFORE ATTEMPTING STEERING WHEEL COMPONENT DIAGNOSIS OR SERVICE. FAILURE TO TAKE PROPER PRECAUTIONS COULD RESULT IN ACCIDENTAL AIRBAG DEPLOYMENT AND POSSIBLE PERSONAL INJURY.

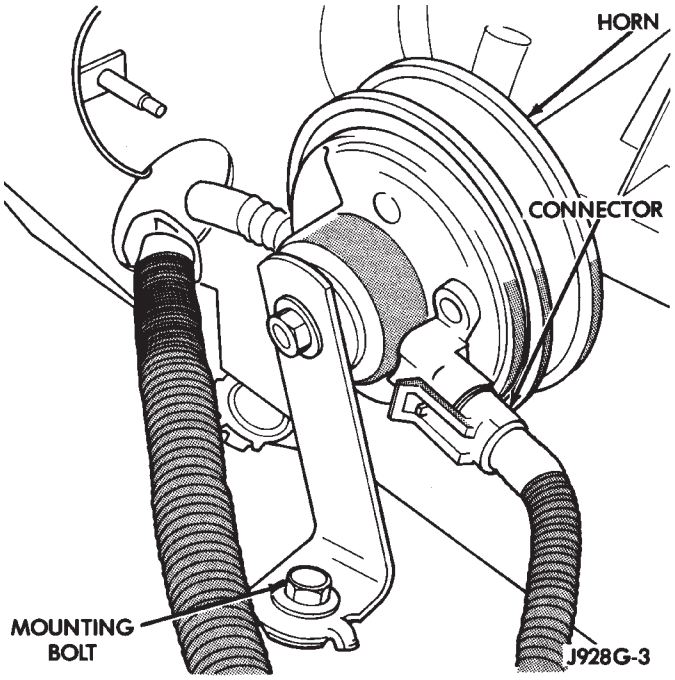

Fig. 4 Horn Mounting - YJ

XJ

(1) Disconnect negative cable from battery and isolate.
(2) Using a small screwdriver, remove plastic cover plug from top outer surface of steering wheel hub (Fig. 5). Exit vehicle and disarm airbag by reaching through driver's side window and turning arming screw counter-clockwise to its travel limit. This is done using an 8mm socket and manual drive. DO NOT USE POWER-DRIVEN TOOLS.
(3) From back side of steering wheel, remove 4 nuts attaching airbag module to steering wheel. This is done using a 10mm socket and manual drive. DO NOT USE POWER-DRIVEN TOOLS.
(4) Remove airbag module from steering wheel.
(5) To access horn switch retaining screws, pry out trim cover buttons on back of steering wheel spokes directly behind horn switches. Remove retaining screws.
(6) Disconnect horn switch wires located in the lower portion of steering wheel hub cavity and remove switches from steering wheel.
(7) Reverse removal procedures to install. Tighten hardware as follows:

- airbag module nuts - 9 to 11 N·m (80 to 100 in. lbs.)
- airbag arming screw - not to exceed 1 to 1.5 N·m (10 to 15 in. lbs.).

YJ

(1) Disconnect negative cable from battery.
(2) Remove horn button by pulling straight up.

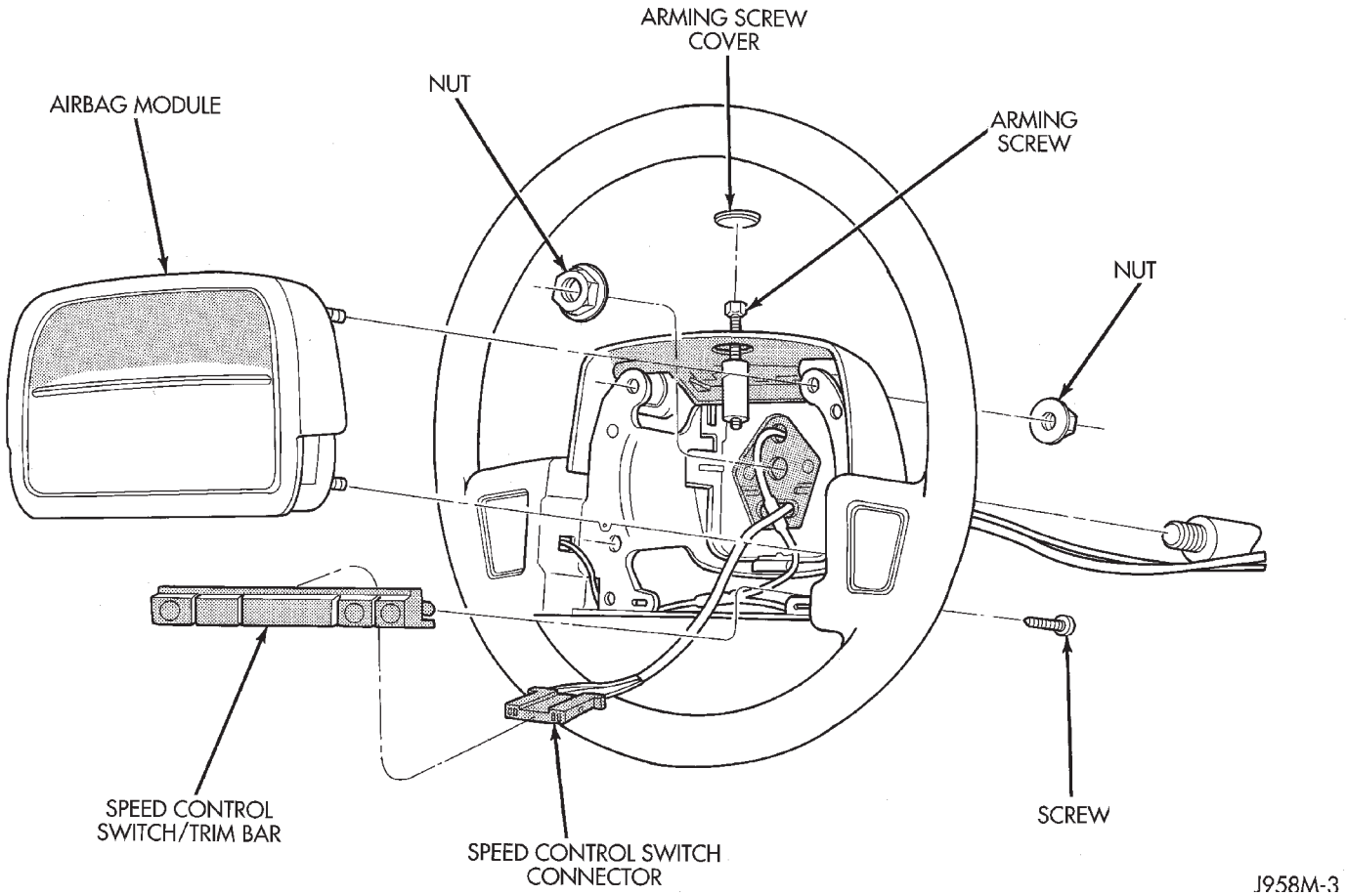

Fig. 5 Airbag Module Remove/Install

(3) Remove horn button components (Fig. 6).
(4) Reverse removal procedures to install.
(5) Connect negative cable to battery.

HORN CONTACT/CLOCKSPRING

Refer to Group 19 - Steering for information on service of the horn switch contact (YJ) or clockspring (XJ).

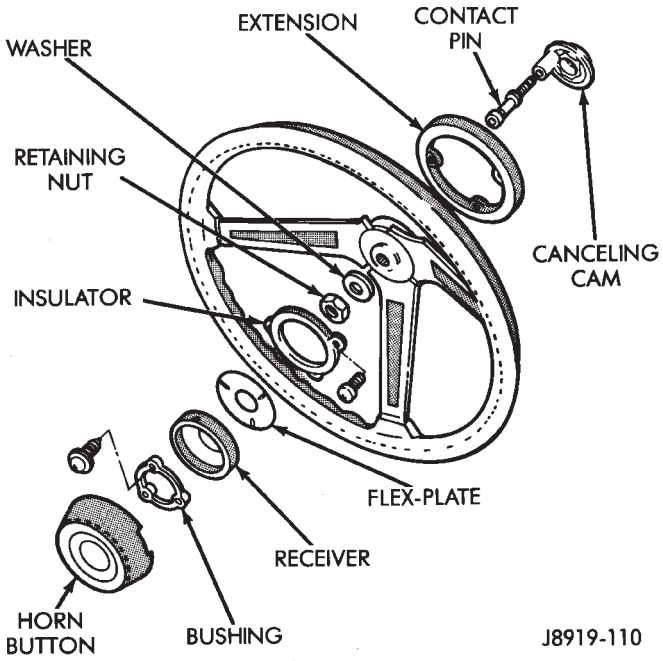

Fig. 6 Horn Switch Remove/Install - YJ

SPECIFICATIONS

COMPONENT	TORQUE
Horn Bracket Screw	20 N·m (15 ft. lbs.)

J918G-4

VEHICLE SPEED CONTROL SYSTEM

CONTENTS

page

DIAGNOSIS 2
GENERAL INFORMATION 1
SERVICE PROCEDURES 9

GENERAL INFORMATION

The vehicle speed control system (Fig. 1) is an available option on all XJ (Cherokee) models. The system is electronically controlled and vacuum operated. Following are general descriptions of the major components in the vehicle speed control system. Refer to Group 8W - Wiring Diagrams for complete circuit descriptions and diagrams.

SPEED CONTROL SERVO

The speed control servo is mounted to a bracket on the right side inner fender shield in the engine compartment. The servo unit consists of a solenoid valve body, a vacuum servo and the mounting bracket. The PCM controls the solenoid valve body. The solenoid valve body controls the application and release of vacuum to the diaphragm of the vacuum servo. The servo unit cannot be repaired and is serviced only as a complete assembly.

SPEED CONTROL SWITCH

The speed control switch module is mounted to the center of the steering wheel below the driver's airbag module. The PCM monitors the state of the speed control switches. The individual switches are labeled: OFF/ON, RESUME/ACCEL, SET/COAST. Refer to the owner's manual for more information on speed control switch functions and setting procedures. The individual switches cannot be repaired. If one switch fails, the entire switch module must be replaced.

STOP LAMP SWITCH

Vehicles with the speed control option use a dual function stop lamp switch. The switch is mounted in the same location as the conventional stop lamp switch, on the brake pedal mounting bracket under the instrument panel. The PCM monitors the state of the dual function stop lamp switch. Refer to Group 5 - Brakes for more information on stop lamp switch service and adjustment procedures.

SERVO CABLE

The speed control servo cable is connected between the speed control vacuum servo diaphragm and the throttle control linkage. This cable causes the throttle control linkage to open or close the throttle valve in response to movement of the vacuum servo diaphragm.

POWERTRAIN CONTROL MODULE

The speed control electronic control circuitry is integrated into the Powertrain Control Module (PCM). The PCM is located in the engine compartment on the left side inner fender shield. The PCM speed control functions are monitored by the On-Board Diagnostics (OBD). All OBD-sensed systems are monitored by the PCM. Each monitored circuit is assigned a Diagnostic Trouble Code (DTC). The PCM will store a DTC in electronic memory for any failure it detects. See Using On-Board Diagnostic System in this group for more information. The PCM cannot be repaired and must be replaced if faulty.

VACUUM RESERVOIR

The vacuum reservoir is mounted behind the left end of the front bumper bar. The reservoir contains a one-way check valve to trap engine vacuum in the reservoir. When engine vacuum drops, as in climbing a grade while driving, the reservoir supplies the vacuum needed to maintain proper speed control operation. The vacuum reservoir cannot be repaired and must be replaced if faulty.

VEHICLE SPEED SENSOR

The Vehicle Speed Sensor (VSS) is a pulse generator mounted to an adapter near the transmission (two-wheel drive) or transfer case (four-wheel drive) output shaft. The sensor is driven through the adapter by a speedometer pinion gear. The VSS pulse signal to the speedometer/odometer is monitored by the PCM speed control circuitry to determine vehicle speed and to maintain speed control set speed. Refer to the appropriate Powertrain Diagnostic Procedures manual for testing of this component. Refer to Group 14 - Fuel System for service of this component.

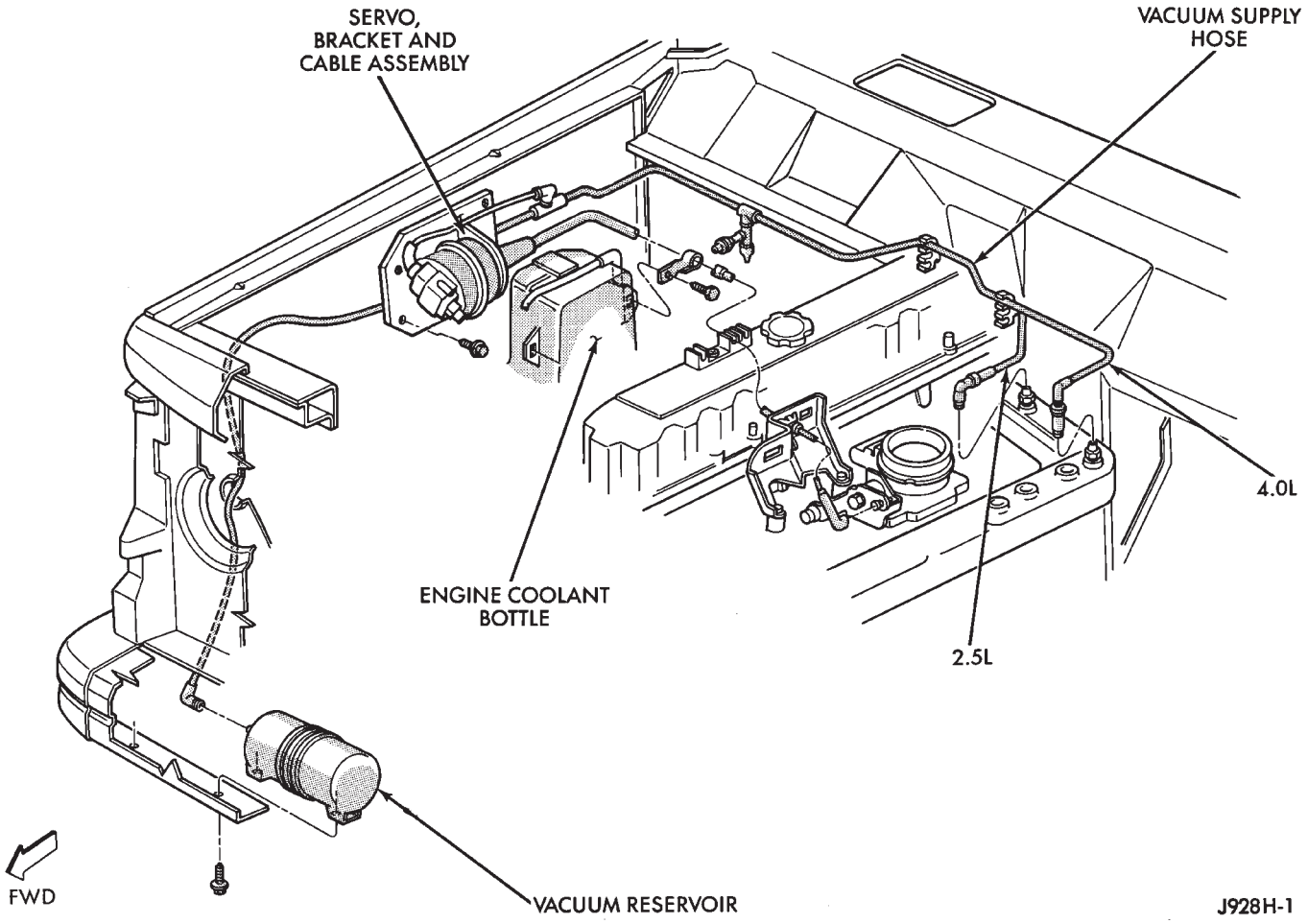

Fig. 1 Vehicle Speed Control System

WARNING: THE USE OF VEHICLE SPEED CONTROL IS NOT RECOMMENDED WHEN DRIVING CONDITIONS DO NOT PERMIT MAINTAINING A CONSTANT SPEED, SUCH AS IN HEAVY TRAFFIC OR ON ROADS THAT ARE WINDING, ICY, SNOW COVERED, OR SLIPPERY.

DIAGNOSIS

Before beginning diagnosis, perform a vehicle road test to verify reports of speed control system malfunction. The road test should include attention to the speedometer. Speedometer operation should be smooth and without flutter at all speeds.

Flutter in the speedometer indicates a problem which might cause surging in the speed control system. The cause of any speedometer problems should be corrected before proceeding. Refer to Group 8E - Instrument Panel and Gauges for speedometer diagnosis.

If a road test verifies a system problem and the speedometer operates properly, check for:

(1) Loose or corroded electrical connections at the servo. Corrosion should be removed from electrical terminals and a light coating of Mopar MultiPurpose Grease, or equivalent, applied.

(2) Correct installation of the vacuum check valve in the hose from servo to vacuum source. The word VAC on the valve must point toward the vacuum source.

(3) Loose or leaking vacuum hoses or connections.

(4) Secure attachment of both ends of the speed control servo cable.

CAUTION: When test probing for voltage or continuity at electrical connectors, care must be taken not to damage connector, terminals, or seals. If these components are damaged, intermittent or complete system failure may occur.

DIAGNOSIS CHART 1

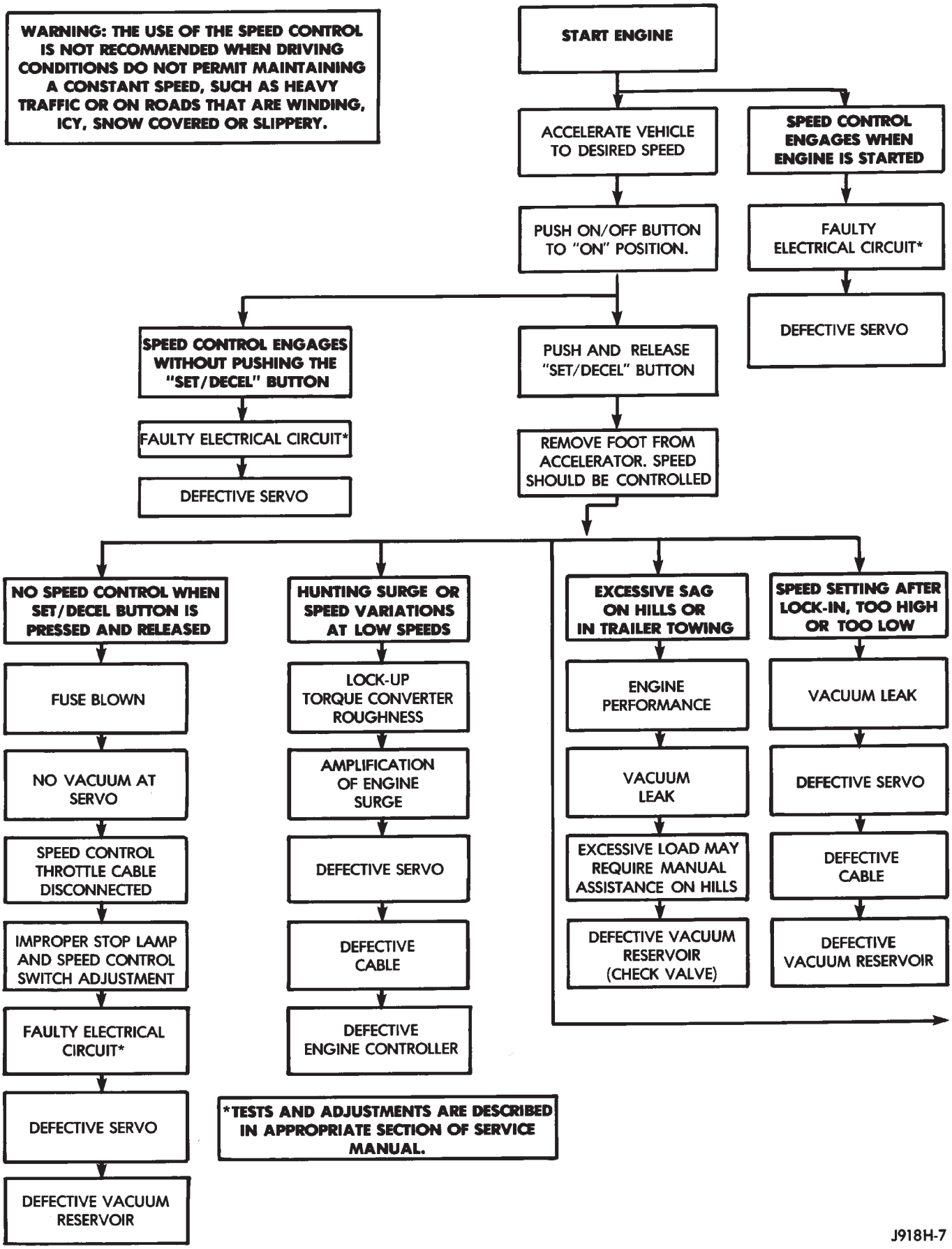

DIAGNOSIS CHART 2

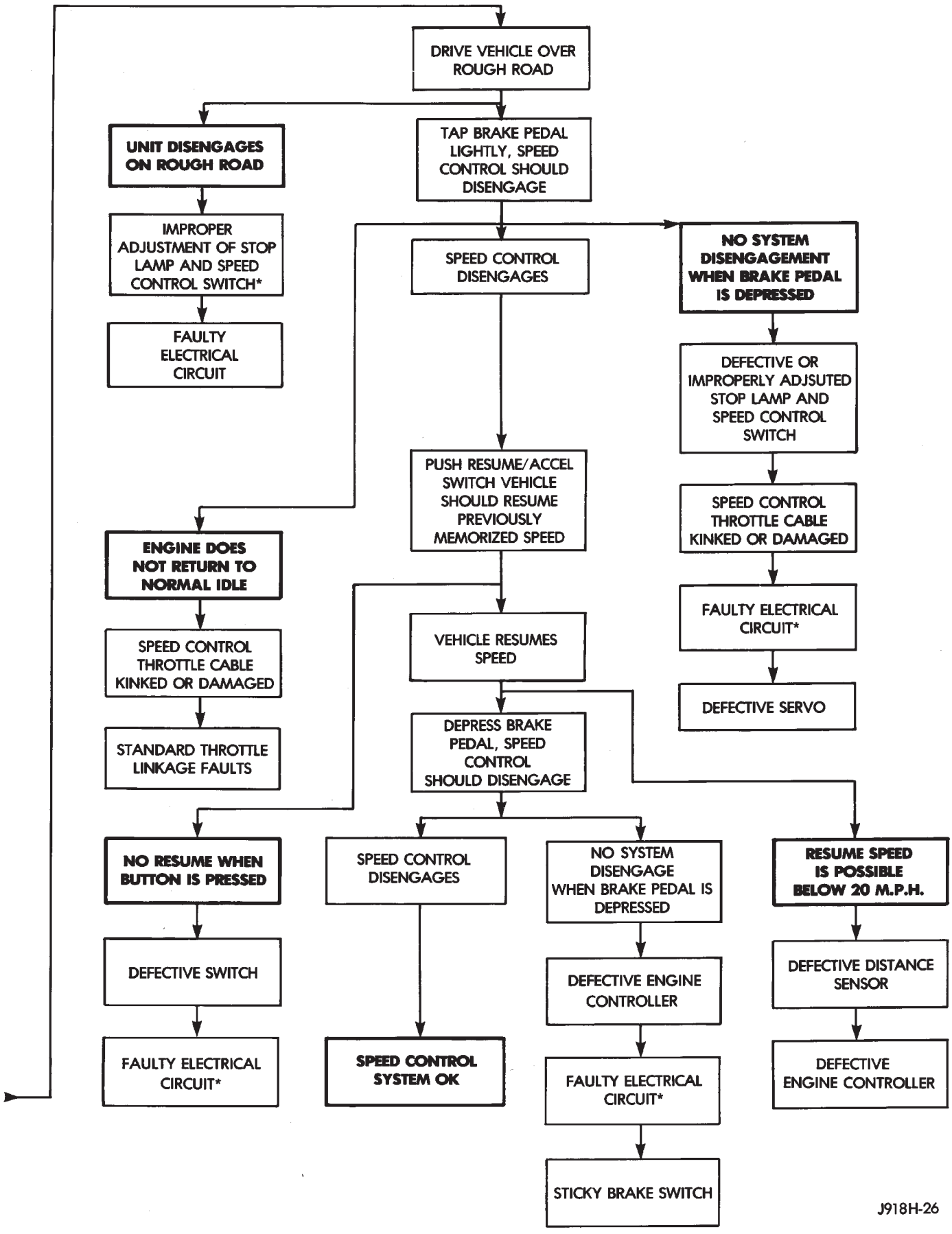

USING ON-BOARD DIAGNOSTIC SYSTEM

The Powertrain Control Module (PCM) monitors critical input and output circuits of the speed control system, making sure they are operational. A Diagnostic Trouble Code (DTC) is assigned to each input and output circuit monitored by the OBD system. Some circuits are checked continuously and some are checked only under certain conditions.

If the OBD system senses that a monitored circuit is bad, it will put a DTC into electronic memory. The DTC will stay in electronic memory as long as the circuit continues to be bad. The PCM is programmed to clear the memory after 50 engine starts, if the problem does not occur again.

DIAGNOSTIC TROUBLE CODES

Diagnostic Trouble Codes (DTC) are two-digit numbers flashed on the malfunction indicator (Check Engine) lamp that identify which circuit is bad. A DTC description can also be read using the DRB scan tool. Refer to Group 14 - Fuel Systems for more information.

A DTC does not identify which component in a circuit is bad. Thus, a DTC should be treated as a symptom, not as the cause for the problem. In some cases, because of the design of the diagnostic test procedure, a DTC can be the reason for another DTC to be set. Therefore, it is important that the test procedures be followed in sequence, to understand what caused a DTC to be set.

See Speed Control Diagnostic Trouble Code chart for DTC's which apply to the speed control system. Refer to the Powertrain Diagnostic Procedures manual to diagnose an on-board diagnostic system trouble code.

RETRIEVING DIAGNOSTIC TROUBLE CODES

To start this function, cycle the ignition switch ON-OFF-ON-OFF-ON within 5 seconds. This will cause any DTC stored in the PCM memory to be displayed. The malfunction indicator (Check Engine) lamp will display a DTC by flashing on and off. There is a short pause between flashes and a longer pause between digits. All DTC's displayed are two-digit numbers, with a four-second pause between codes.

An example of a DTC is as follows:

(1) Lamp on for 2 seconds, then turns off.

(2) Lamp flashes 1 time pauses and then flashes 5 times.

(3) Lamp pauses for 4 seconds, flashes 3 times, pauses, then flashes 4 times.

The two DTC's are 15 and 34. Any number of DTC's can be displayed, as long as they are in memory. The lamp will flash until all stored DTC's are displayed (55 = end of test).

If a DTC 15 is observed, see diagnosis for Vehicle Speed Sensor in this group. If a DTC 34 is observed, see diagnosis for Speed Control Servo and Powertrain Control Module in this group. Correct any problems found in your diagnosis, then recheck for DTC after corrections are completed.

VEHICLE SPEED SENSOR

For diagnosis of the VSS, refer to the appropriate Powertrain Diagnostic Procedures manual.

SPEED CONTROL DIAGNOSTIC TROUBLE CODE

Diagnostic Trouble Code	DRB Scan Tool Display	Description of Diagnostic Trouble Code
15**	No Vehicle Speed Sensor Signal	No vehicle distance (speed) sensor signal detected during road load conditions.
34*	Speed Control Solenoid Circuits	An open or shorted condition detected in the Speed Control vacuum or vent solenoid circuits.
	or	
	Speed Control Switch Always Low	Speed Control switch input below the minimum acceptable voltage.
	or	
	Speed Control Switch Always High	Speed Control switch input above the maximum acceptable voltage.
55*	N/A	Completion of fault code display on Check Engine lamp.

* Check Engine Lamp will not illuminate at all times if this Diagnostic Trouble Code was recorded. Cycle Ignition key as described in manual and observe code flashed by Check Engine lamp.

** Check Engine Lamp will illuminate during engine operation if this Diagnostic Trouble Code was recorded.

J948H-17

SPEED CONTROL SWITCH

WARNING: ON VEHICLES EQUIPPED WITH AN AIRBAG, REFER TO GROUP 8M - RESTRAINT SYSTEMS BEFORE ATTEMPTING STEERING WHEEL COMPONENT DIAGNOSIS OR SERVICE. FAILURE TO TAKE PROPER PRECAUTIONS COULD RESULT IN ACCIDENTAL AIRBAG DEPLOYMENT AND POSSIBLE PERSONAL INJURY.

(1) Disconnect battery negative cable. Remove speed control switch from steering wheel.

(2) Check speed control switch continuity as shown in chart (Fig. 2). If OK, reinstall switch. If not OK, replace switch.

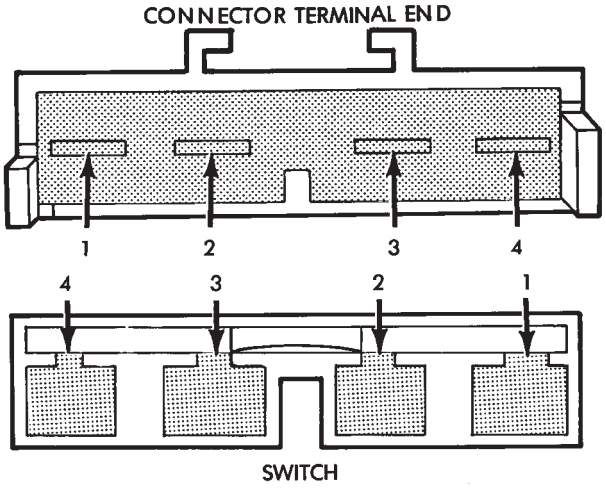

SPEED CONTROL SWITCH CONTINUITY	
SWITCH POSITION	CONTINUITY BETWEEN
OFF	PIN 1 AND PIN 4
ON	PIN 1 AND PIN 4 PIN 1 AND PIN 2 PIN 2 AND PIN 4
ON AND SET	PIN 1 AND PIN 2
ON AND RESUME	PIN 1 AND PIN 3

J928H-4

Fig. 2 Speed Control Switch Continuity

STOP LAMP SWITCH

(1) Unplug the connector at the stop lamp switch. With the brake pedal released, check switch for continuity at the switch side of connector (Fig. 3) as follows:

(a) There should be continuity between the black and white/pink wires.

(b) There should be continuity between the yellow/red and dark blue/red wires.

(c) There should be no continuity between pink and white wires.

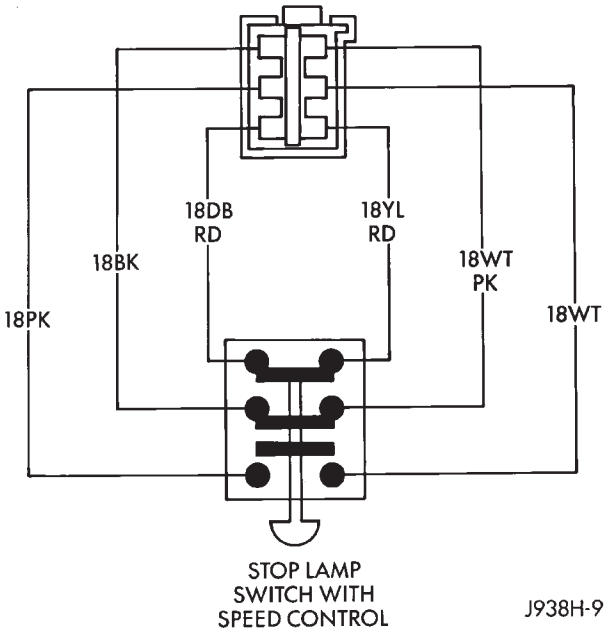

Fig. 3 Stop Lamp Switch Connector

(2) With the brake pedal applied, check switch for continuity at the switch side of connector (Fig. 3) as follows:

(a) There should be continuity between pink and white wires.

(b) There should be no continuity between black and white/pink wires.

(c) There should be no continuity between the yellow/red and dark blue/red wires.

(3) If the above results are not obtained, check the stop lamp switch adjustment. If adjustment is OK, replace faulty switch. Refer to Group 5 - Brakes for adjustment and service procedures.

VACUUM SUPPLY TEST

(1) Disconnect vacuum hose at the servo and install a vacuum gauge in the hose.

(2) Start engine and observe gauge at idle. Vacuum gauge should read at least ten inches of mercury.

(3) If vacuum does not meet this requirement, check for vacuum leaks or poor engine performance.

SPEED CONTROL SERVO

(1) Check fuse F13 in the PDC. If OK, go to next step. If not OK, replace fuse.

(2) Turn ignition switch to the ON position. Check for battery voltage at fuse F13. If OK, go to next step. If not OK, repair open circuit to ignition switch as required.

(3) Connect the negative lead of a voltmeter to a good chassis ground near the servo. Unplug the 4-way connector going to the servo (Fig. 4 or 5). Push the speed control switch to the ON position. Check for battery voltage at servo harness connector cavity

for pin 2 (Fig. 6). If OK, go to next step. If not OK, see diagnosis for Stop Lamp Switch.

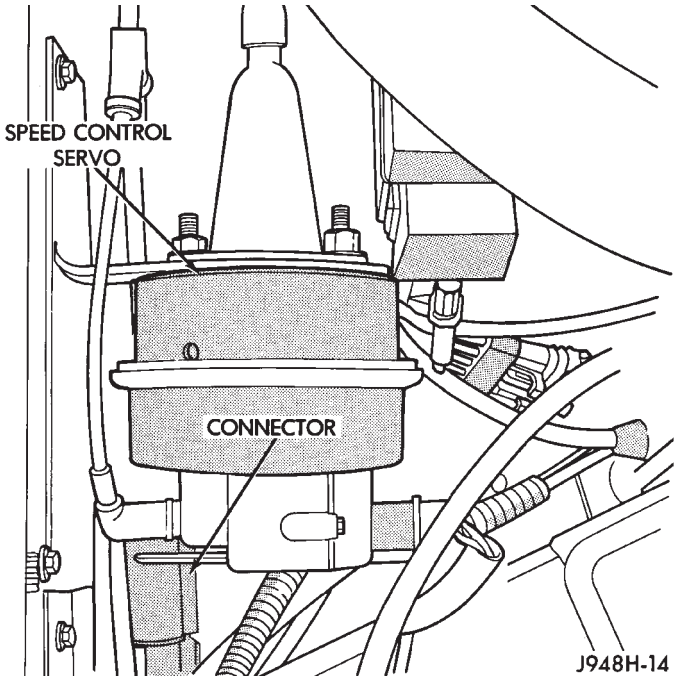

Fig. 4 Speed Control Servo - LHD

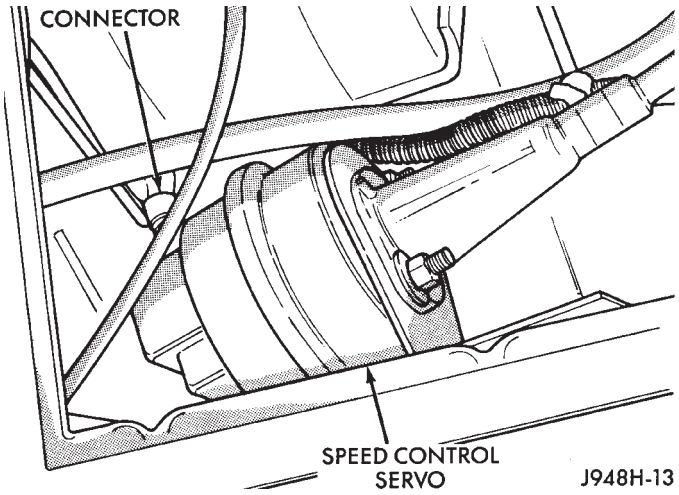

Fig. 5 Speed Control Servo - RHD

(4) Connect a jumper wire between servo harness connector cavity for pin 2 and pin 2 of the servo. Check for battery voltage at pins 1, 3 and 4 of the servo. If OK, go to next step. If not OK, replace the servo.

(5) Turn ignition switch to OFF position. Check for continuity between servo harness connector cavity for pin 1 and a good ground. There should be continuity. If not OK, repair open circuit to ground as required.

POWERTRAIN CONTROL MODULE

(1) Disconnect 60-way connector from the PCM, located on the dash panel near the wiper motor in the engine compartment (Fig. 7).

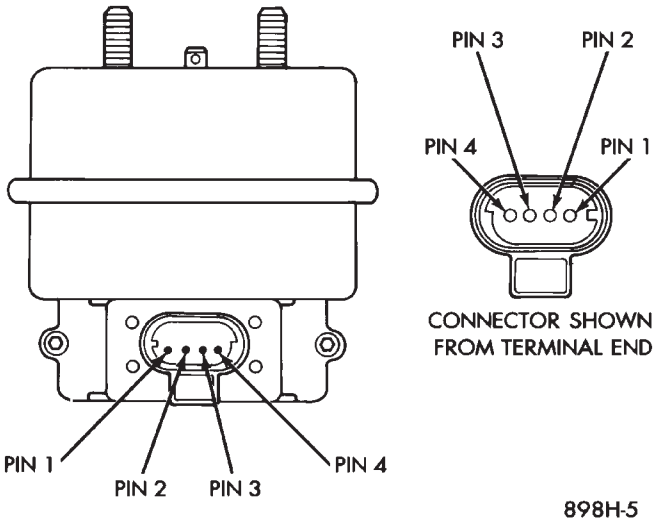

Fig. 6 Servo Harness Connector

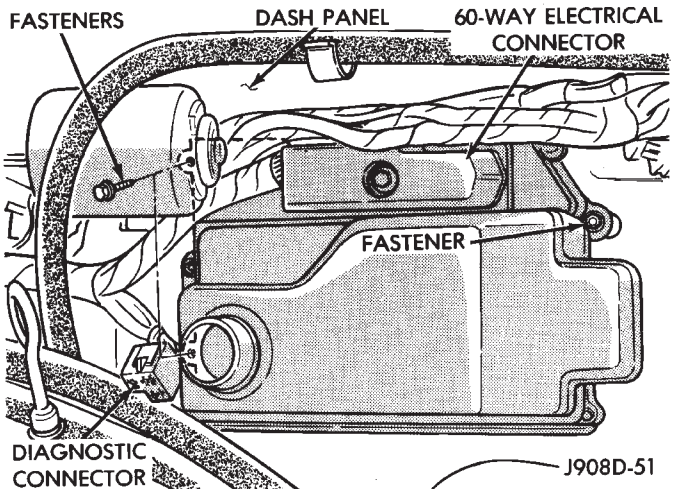

Fig. 7 Powertrain Control Module

(2) Connect negative lead of voltmeter to a good body ground near the module.

(3) For the following tests, the ignition switch must be in the ON position. See Fig. 8 for controller terminal locations. Touch the positive lead of the voltmeter to the terminal in cavity number 33. With the speed control switch in the OFF position, the voltmeter should read zero volts. With the speed control switch in the ON position, the voltmeter should read battery voltage. If not, repair the main harness as necessary.

(4) Touch the positive lead of the voltmeter to the terminal in cavity number 53. As in step (3), the voltmeter should read zero volts with the switch in the OFF position, and battery voltage with the switch in the ON position.

(5) Touch the positive lead of the voltmeter to the terminal in cavity number 48. With the speed control switch in the OFF position, the voltmeter should

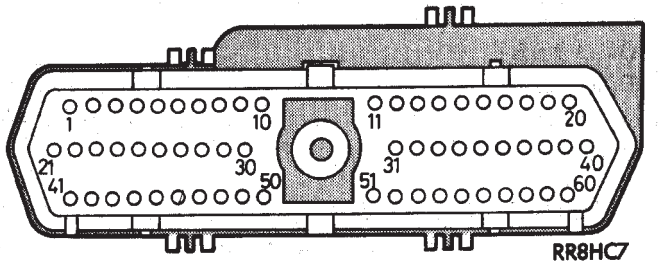

Fig. 8 PCM 60-Way Connector - Terminal End

read zero volts. With the switch in the ON position, the voltmeter should read battery voltage. Pressing the SET/COAST button should cause the voltmeter to change from battery voltage to zero volts for as long as the switch is held. If not, perform the Speed Control Switch Test. If the switch is not at fault, then check the main harness and repair as necessary.

(6) Touch the positive lead of the voltmeter to the terminal in cavity number 50. The voltmeter should read zero volts with the speed control switch in either the OFF or ON position. With switch in either RESUME or SET position, the voltmeter should read battery voltage. If not, perform the Speed Control Switch Test. If the switch is not at fault, then check the main harness and repair as necessary.

(7) Touch the positive lead of the voltmeter to the terminal in cavity number 49. The voltmeter should read zero volts with the switch in the OFF position. With the switch in the ON position, the voltmeter should read battery voltage. The voltmeter will continue to read battery voltage when either the SET or RESUME switch is pressed. If not, perform the Speed Control Switch Test. If the switch is not at fault, then check the main harness and repair as necessary.

(8) Turn ignition switch OFF. Using an ohmmeter, connect one lead to a good body ground and touch the other lead to the terminal in cavity number 29. With the brake pedal released, the meter should show continuity. When the pedal is depressed, the meter should show an open circuit.

SERVICE PROCEDURES

SPEED CONTROL SERVO REMOVE/INSTALL

(1) Disconnect battery negative cable.
(2) Disconnect vacuum hose at servo.
(3) Remove 2 nuts on servo cable sleeve.
(4) Pull speed control cable away from servo to expose cable retaining clip (Fig. 9).

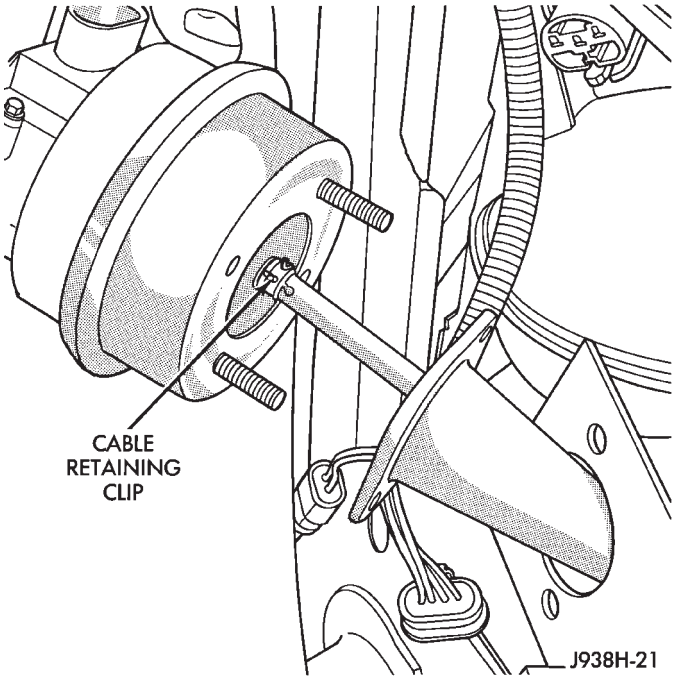

Fig. 9 Servo Cable Remove/Install

(5) Remove clip attaching cable to servo.
(6) Pull servo away from mounting bracket.
(7) To install, insert servo studs through holes in sevo mounting bracket.
(8) Block throttle to full open position, align hole in cable sleeve with hole in servo pin and install retaining clip.
(9) Reverse remaining removal procedures to install. Tighten servo mounting nuts to 6 N·m (50 in. lbs.).

SPEED CONTROL SWITCH REMOVE/INSTALL

WARNING: ON VEHICLES EQUIPPED WITH AN AIRBAG, REFER TO GROUP 8M - RESTRAINT SYSTEMS BEFORE ATTEMPTING STEERING WHEEL COMPONENT DIAGNOSIS OR SERVICE. FAILURE TO TAKE PROPER PRECAUTIONS COULD RESULT IN ACCIDENTAL AIRBAG DEPLOYMENT AND POSSIBLE PERSONAL INJURY.

(1) Disconnect negative cable from battery.
(2) From underside of steering wheel, remove speed control switch mounting screws (Fig. 10).

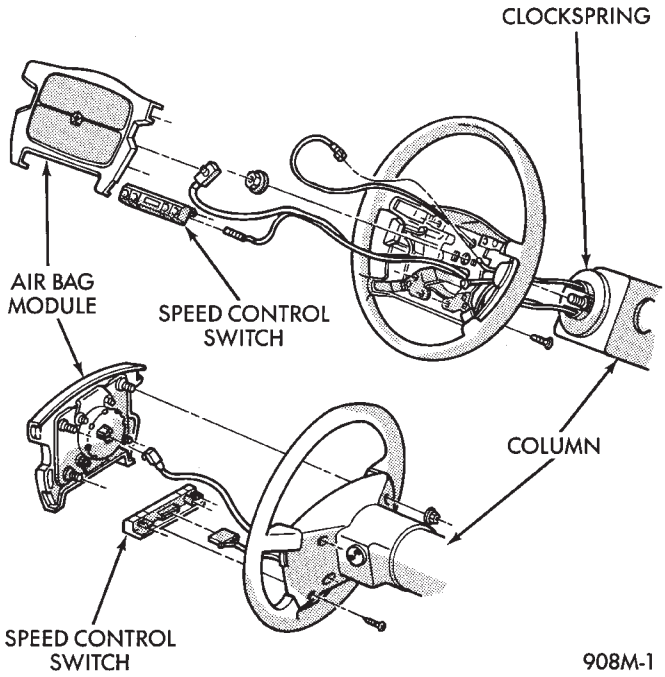

Fig. 10 Speed Control Switch Remove/Install - Typical

(3) Pull switches from wheel and unplug connector.
(4) Plug electrical connector into new switches.
(5) Install new switches with 2 screws.

SERVO CABLE REMOVE/INSTALL

(1) Remove air cleaner.

(2) Using finger pressure only, remove speed control cable connector at bellcrank by pushing connector off the bellcrank (Fig. 11). DO NOT try to pull connector off perpendicular to the bellcrank.

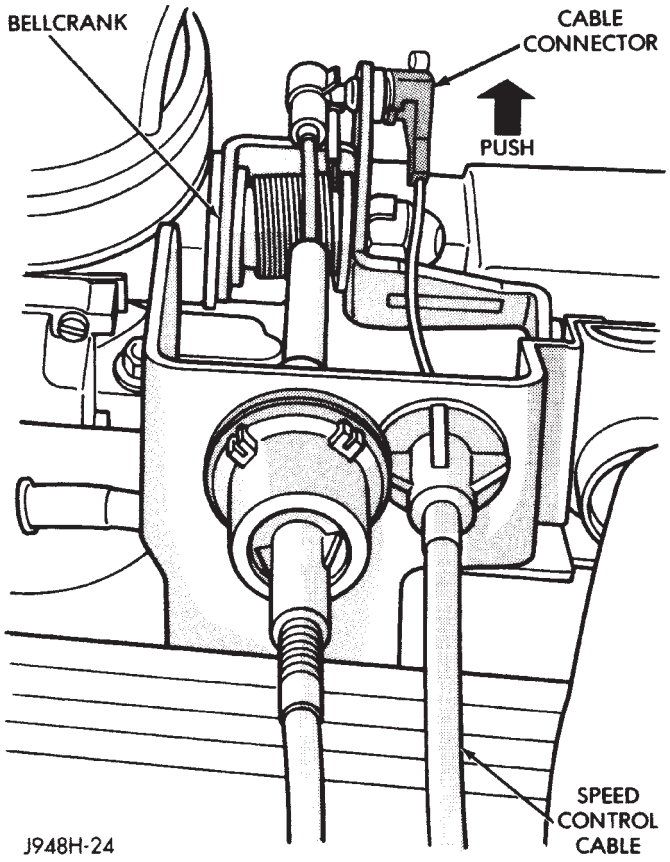

Fig. 11 Servo Cable to Bellcrank Remove/Install

(3) Squeeze tabs on speed control cable and push out of locking plate (Fig. 12). Unclip cable from cable guide.

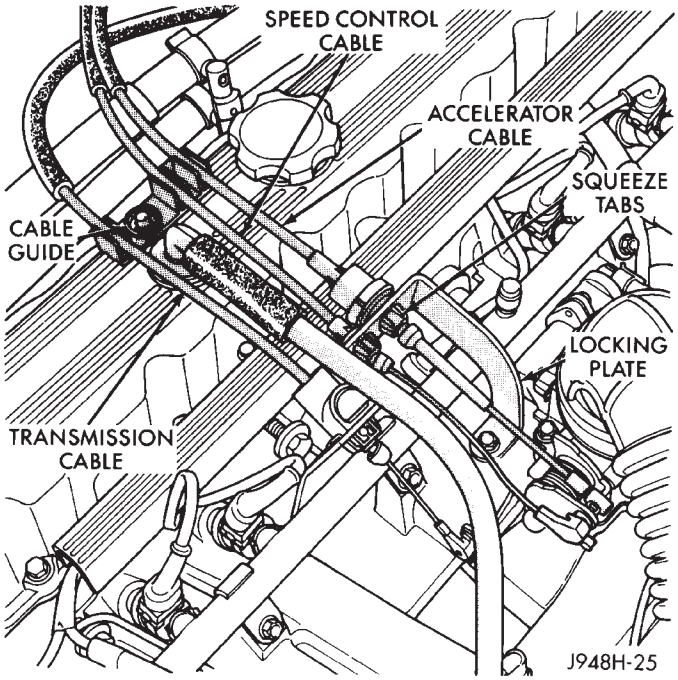

Fig. 12 Servo Cable to Locking Plate Remove/Install

(4) Remove servo cable from servo as described in Speed Control Servo Remove/Install.

(5) Reverse removal procedures to install.

VACUUM RESERVOIR REMOVE/INSTALL

(1) Remove vacuum hose connection at reservoir.

(2) Remove 2 screws securing reservoir from beneath front bumper.

(3) Remove reservoir.

(4) Reverse removal procedures to install. Tighten mounting screws to 8.5 N·m (75 in. lbs.).

TURN SIGNAL AND HAZARD WARNING SYSTEMS

CONTENTS

	page		page
DIAGNOSIS	3	SERVICE PROCEDURES	5
GENERAL INFORMATION	1		

GENERAL INFORMATION

Following are general descriptions of the major components in the XJ (Cherokee)/YJ (Wrangler) model turn signal and hazard warning systems. Refer to Group 8W - Wiring Diagrams for complete circuit descriptions and diagrams.

TURN SIGNAL SYSTEM

With the ignition switch in the ON or ACCESSORY position and the turn signal switch lever (YJ) or multi-function switch control lever (XJ) moved up (right turn) or down (left turn), the turn signal system is activated.

When the turn signal system is activated, the selected (right or left) turn signal indicator lamp, front park/turn signal lamp and rear tail/stop/turn signal lamp bulb filaments will flash. With the headlamp switch in the OFF position, the turn and front side marker lamps flash in unison. With the headlamp switch in the ON position, the turn and front side marker lamps flash alternately.

HAZARD WARNING SYSTEM

The hazard warning is activated by a switch button located below the ignition lock cylinder (YJ) or on the top of the steering column (XJ) between the steering wheel and the instrument panel. The hazard warning flasher (YJ) or combination flasher (XJ) receives battery feed at all times, and the system is functional regardless of ignition switch position. The hazard warning switch button is identified with a double triangle. On YJ models, push the switch button in to activate the hazard warning system and pull the button out to turn system off. On XJ models, push in on the switch button to latch the switch and activate the hazard warning system, and push in on the switch button again to unlatch the switch and turn the system off.

When the hazard warning system is activated, all (right and left) turn signal indicator, front park/turn signal lamp and rear tail/stop/turn signal lamp bulb filaments will flash.

TURN SIGNAL FLASHER (YJ ONLY)

The turn signal flasher is located in the fuseblock module. It contains one fixed contact point and one contact point attached to a flexible bimetal arm. The contact points are normally closed. When a turn signal is activated, current flows through the flasher. As current flows through the bimetal arm it heats and flexes to pull the contact points open, stopping current flow. As the bimetal arm cools it straightens, until the contact points close and the cycle repeats.

The standard flasher is designed to handle the current flow requirements of the factory installed lighting. If supplemental lighting is added to the turn signal circuits such as when towing a trailer with lights, the current flow through the flasher increases. This causes the flash rate to increase. It is recommended that the standard flasher be replaced with a heavy-duty (hazard warning) flasher when supplemental lighting is added.

However, when a turn signal bulb fails with a standard flasher, the remaining bulbs in that circuit will light, but not flash. This will give the driver an indication to check the turn signal bulbs. Because a heavy-duty flasher has different internal circuitry, a failed bulb will not prevent the remaining bulbs in the circuit from flashing. Therefore, it is recommended that an occasional visual inspection of exterior turn signal lamp operation be performed when a heavy-duty flasher is installed.

HAZARD WARNING FLASHER (YJ ONLY)

The hazard warning flasher is located in the fuseblock module. The hazard warning flasher contains two normally open contact points mounted to two flexible arms. A bimetal strip is attached between the two arms. When the hazard warning is activated, current flows through the flasher. As the current flows through the bimetal strip it heats and pulls the flexible arms together until the contact points close,

allowing current flow to the lamps. As the bimetal strip cools, the contact points are pushed open and the cycle repeats.

COMBINATION FLASHER (XJ ONLY)

The combination flasher functions as both the turn signal and hazard warning flasher on XJ models. The combination flasher is a smart relay that is located in the relay center under the lower instrument panel and inboard of the steering column. The combination flasher can not be repaired. If faulty, it must be replaced.

The combination flasher is designed to handle the current flow requirements of the factory installed lighting. If supplemental lighting is added to the turn signal circuits such as when towing a trailer with lights, the combination flasher will automatically compensate. This allows the flash rate to remain the same, regardless of electrical load increases. However, if a bulb fails in the turn signal or hazard warning circuits, the flash rate of the remaining bulbs in that circuit will increase to 120 flashes per minute or higher.

TURN SIGNAL/HAZARD WARNING SWITCH (YJ ONLY)

The turn signal and hazard warning switches are combined into a single unit mounted within the upper steering column bowl and beneath the steering wheel. The turn signal lever on the left side of the steering column is moved up or down to select the right or left turn signal switch position. The turn signals will only operate with the ignition switch in the ACCESSORY or ON position.

The hazard warning button on the right side of the steering column is pushed in to turn the hazard warning system on, or pulled out to turn the system off. The hazard warning system will operate regardless of ignition switch position. The turn signal/hazard warning switch can not be repaired. If faulty, the entire unit must be replaced.

MULTI-FUNCTION SWITCH (XJ ONLY)

The multi-function switch assembly (Fig. 1) is mounted to the left side of the steering column. This switch contains electrical circuitry for the following functions:

- turn signals
- hazard warning
- headlamp beam selection
- headlamp optical horn
- windshield wipers
- windshield washers.

The information contained in this group addresses only the switch functions for the turn signal and hazard warning circuits. For information relative to other switch functions, refer to the appropriate group. However, the multi-function switch can not be repaired. If any function of the switch is faulty, the entire switch assembly must be replaced.

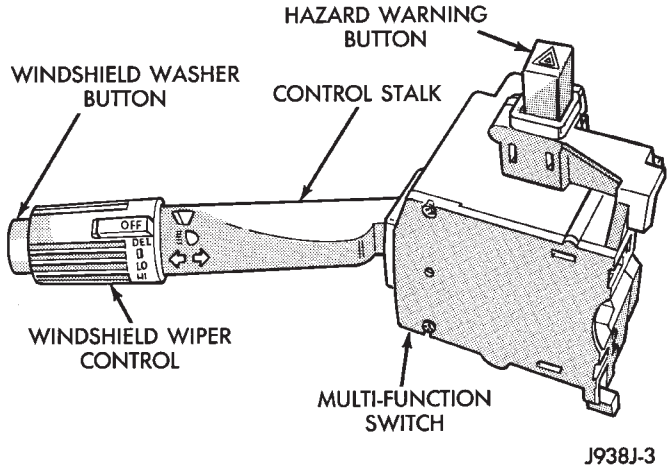

Fig. 1 Multi-Function Switch

TURN SIGNAL INDICATOR LAMPS

These lamps are located in the instrument cluster. They flash with the exterior turn signal lamps to give the driver a visual indication that a turn signal or the hazard warning circuit is operating. For diagnosis and service of this component, refer to Group 8E - Instrument Panel and Gauges.

TURN SIGNAL LAMPS

The exterior lamps included in the turn signal and hazard warning circuits include: the front park/turn signal, and the rear tail/stop/turn signal. For diagnosis and service of these lamps, refer to Group 8L - Lamps.

DIAGNOSIS

When diagnosing the turn signal or hazard warning circuits, remember that high generator output can burn out bulbs rapidly and repeatedly. If this is a problem on the vehicle being diagnosed, refer to Group 8A - Battery/Starting/Charging Systems Diagnostics to test charging system.

WARNING: ON VEHICLES EQUIPPED WITH AN AIRBAG, REFER TO GROUP 8M - RESTRAINT SYSTEMS BEFORE ATTEMPTING STEERING WHEEL COMPONENT DIAGNOSIS OR SERVICE. FAILURE TO TAKE PROPER PRECAUTIONS COULD RESULT IN ACCIDENTAL AIRBAG DEPLOYMENT AND POSSIBLE PERSONAL INJURY.

TURN SIGNAL/HAZARD WARNING SYSTEM - XJ

(1) Turn ignition switch to ON position. Actuate the turn signal lever or hazard warning button. Observe the turn indicator lamp(s) in the instrument cluster. If the flash rate is very high, check for a turn signal bulb that is not lit. Replace that bulb or repair circuits to that lamp, as required. Test operation. If turn indicator does not light, continue to next step.

(2) Remove and inspect fuse 8 (turn signals) in fuseblock module, or fuse F13 (hazard warning) in the Power Distribution Center. Replace fuse, if required.

(3) Remove combination flasher from relay center and replace with a known good unit. Test operation of turn signal and hazard warning systems. If OK, replace faulty combination flasher. If not OK, remove test flasher and go to next step.

(4) With ignition switch in ON position, check for battery voltage at cavity for flasher terminal J1 (Fig. 2). If OK, go to next step. If not OK, repair circuit to ignition switch as required.

(5) With ignition switch in OFF position, check for battery voltage at cavity for flasher terminal J2. If OK, go to next step. If not OK, repair circuit to Power Distribution Center as required.

(6) With ignition switch in OFF position, check for continuity between cavity for flasher terminal J5 and a good ground. There should be continuity. If OK, go to next step. If not OK, repair circuit to ground as required.

(7) Locate the multi-function switch connector. See Multi-Function Switch, in this group. Check for continuity between cavity for flasher terminal J3 and cavity 13 of the multi-function switch connector. There should be continuity. If OK, go to next step. If not OK, repair open circuit as required.

(8) Check for continuity between cavity for flasher terminal J4 and cavity 17 of the multi-function switch connector. There should be continuity. If OK, test multi-function switch. If not OK, repair open circuit as required.

TURN SIGNAL SYSTEM - YJ

A turn signal indicator lamp that remains lit (without flashing) is an indication of a burned out exterior turn signal bulb or faulty exterior lamp circuit. Check

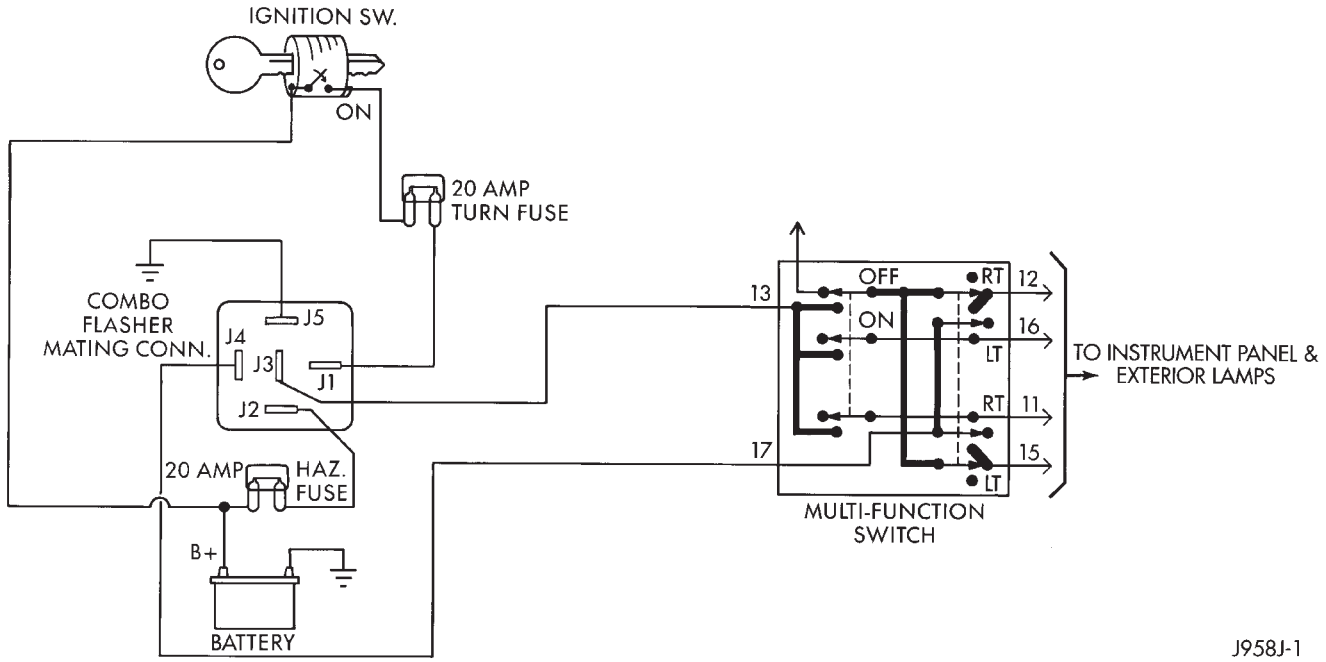

Fig. 2 Combination Flasher Circuit - XJ

lamps and repair circuits or replace bulbs as required. If system still does not function properly, proceed as follows.

(1) Locate fuseblock module under driver's side of instrument panel. Remove and inspect fuse 4. If OK, go to next step. If not OK, replace fuse as required.

(2) Replace turn signal flasher (light blue can in fuseblock module) with a known good unit. Test operation. If OK, replace faulty turn signal flasher. If not OK, remove test flasher and go to next step.

(3) Turn ignition switch to ACCESSORY position. Check for battery voltage at flasher cavity on left (closest to hazard flasher). If OK, go to next step. If not OK, repair circuit to fuse 4 as required.

(4) Turn ignition switch to OFF position. See Turn Signal/Hazard Warning Switch Remove/Install to locate steering column connector. Unplug connector.

(5) Turn ignition switch to ACCESSORY position. Check for battery voltage at connector terminal L. If OK, replace turn signal/hazard warning switch. If not OK, repair circuit between turn signal flasher and steering column connector.

HAZARD WARNING SYSTEM - YJ

(1) Locate Power Distribution Center (PDC) near battery tray in engine compartment. Remove and inspect fuse F5. If OK, go to next step. If not OK, replace fuse as required.

(2) Replace hazard warning flasher (metal can in fuseblock module) with a known good unit. Test operation. If OK, replace faulty hazard warning flasher. If not OK, remove test flasher and go to next step.

(3) Check for battery voltage at flasher cavity on left (closest to hazard flasher). If OK, go to next step. If not OK, repair circuit to fuse F5 in PDC as required.

(4) See Turn Signal/Hazard Warning Switch Remove/Install to locate steering column connector. Unplug connector.

(5) Check for battery voltage at connector terminal K. If OK, replace turn signal/hazard warning switch. If not OK, repair circuit between hazard warning flasher and steering column connector.

MULTI-FUNCTION SWITCH - XJ

(1) Access multi-function switch connector and remove. See service procedures for Multi-Function Switch, in this group.

(2) Using an ohmmeter, perform switch continuity checks at the switch terminals as shown in the chart (Fig. 3).

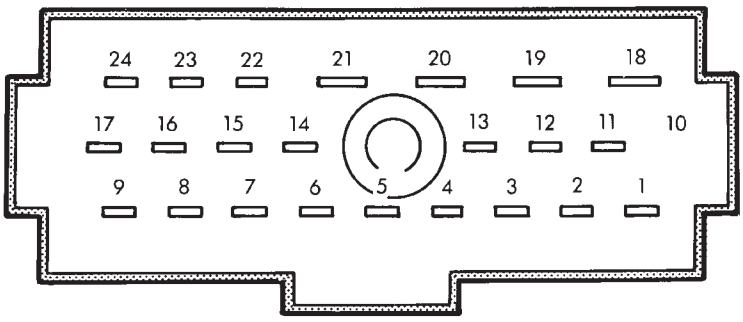

VIEW FROM TERMINAL CASE

SWITCH POSITIONS TURN SIGNAL	SWITCH POSITIONS HAZARD WARNING	CONTINUITY BETWEEN
NEUTRAL	OFF	12 AND 14 AND 15
LEFT	OFF	15 AND 16 AND 17
LEFT	OFF	12 AND 14
LEFT	OFF	22 AND 23 WITH OPTIONAL CORNER LAMPS
RIGHT	OFF	11 AND 12 AND 17
RIGHT	OFF	14 AND 15
RIGHT	OFF	23 AND 24 WITH OPTIONAL CORNER LAMPS
NEUTRAL	ON	11 AND 12 AND 13 AND 15 AND 16

908J-4

Fig. 3 Multi-Function Switch Continuity

SERVICE PROCEDURES

WARNING: ON VEHICLES EQUIPPED WITH AN AIRBAG, REFER TO GROUP 8M - RESTRAINT SYSTEMS BEFORE ATTEMPTING STEERING WHEEL COMPONENT DIAGNOSIS OR SERVICE. FAILURE TO TAKE PROPER PRECAUTIONS COULD RESULT IN ACCIDENTAL AIRBAG DEPLOYMENT AND POSSIBLE PERSONAL INJURY.

MULTI-FUNCTION SWITCH REMOVE/INSTALL - XJ

(1) Disconnect battery negative cable.
(2) Remove tilt lever (if equipped).
(3) Remove lower instrument panel/knee blocker (Fig. 4).

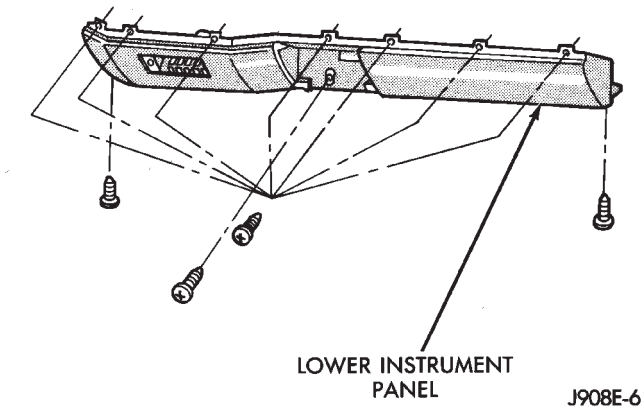

Fig. 4 Lower Instrument Panel/Knee Blocker Remove/Install

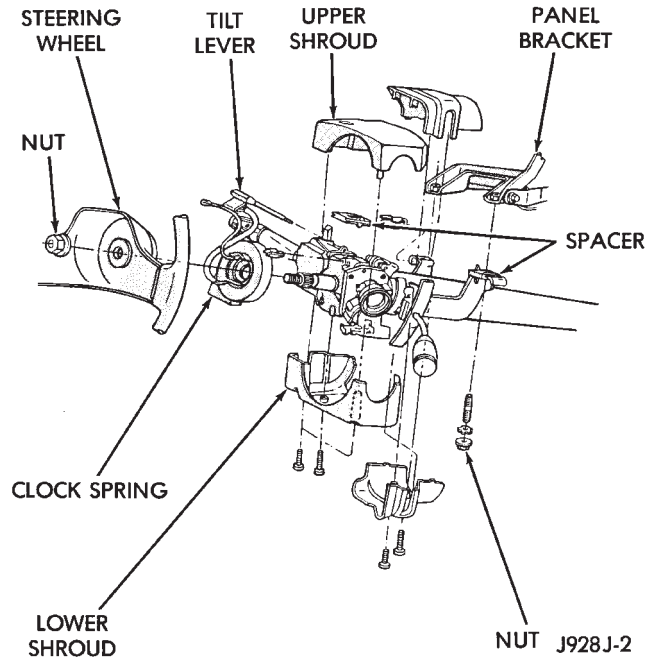

Fig. 5 Steering Column Shrouds Remove/Install

(4) Remove both upper and lower shrouds from column (Fig. 5).
(5) Remove lower fixed column shroud.
(6) Loosen steering column upper bracket nuts. Do not remove nuts.
(7) Move upper fixed column shroud to gain access to rear of multi-function switch (Fig. 6).

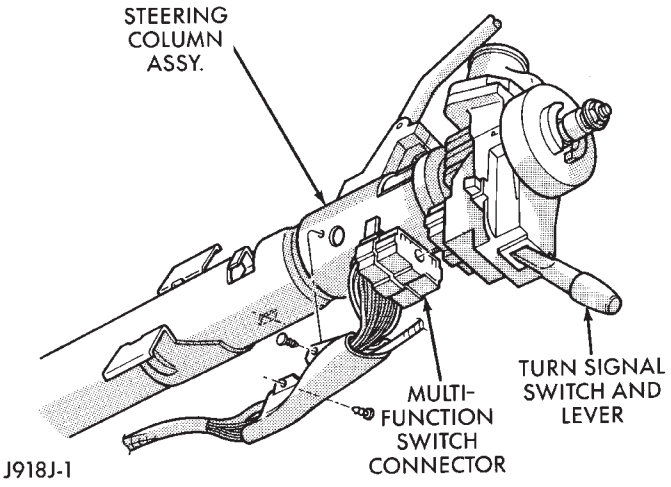

Fig. 6 Multi-Function Switch Connector

(8) Remove multi-function switch tamper proof mounting screws (tamper proof torx bit Snap On TTXR20B2 or equivalent required).
(9) Gently pull switch away from column. Loosen connector screw. The screw will remain in the connector.
(10) Remove wiring connector from multi-function switch.
(11) Reverse removal procedures to install. Tighten fasteners as follows:

- multi-function switch connector screw - 1.9 N·m (17 in. lbs.)
- multi-function switch retaining screws - 1.9 N·m (17 in. lbs.)
- steering column upper bracket nuts - 12 N·m (110 in. lbs.).

TURN SIGNAL/HAZARD WARNING SWITCH REMOVE/INSTALL - YJ

(1) Disconnect battery negative cable.
(2) Remove the horn button with a push and turn motion.
(3) Remove the horn button components (Fig. 7).
(4) Turn ignition switch to LOCK position and remove steering wheel nut and washer.
(5) Scribe an alignment mark on the steering in line with the mark already existing on the end of the steering column.

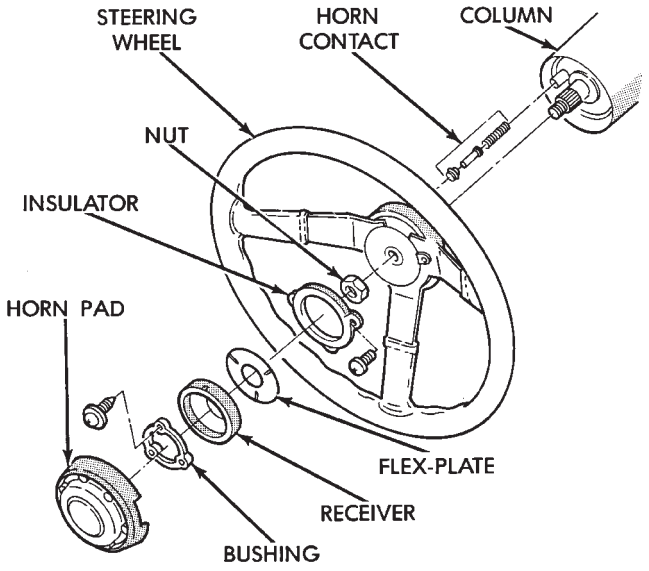

Fig. 7 Steering Wheel Remove/Install

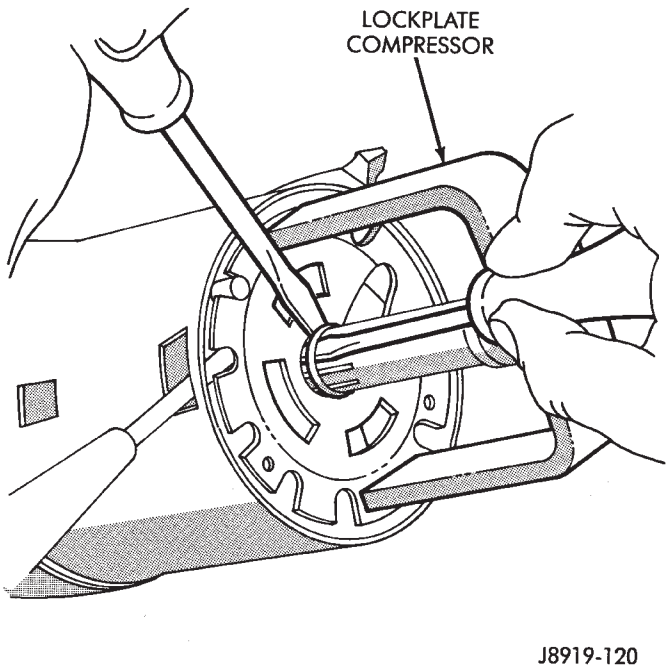

Fig. 8 Lockplate Remove

(6) Remove vibration damper from the steering column hub, if equipped.

(7) Remove the steering wheel using a steering wheel puller. DO NOT hammer on puller or end of steering shaft.

WARNING: TO REMOVE THE STEERING SHAFT SNAP RING IN THE FOLLOWING STEP, THE LOCKPLATE MUST BE COMPRESSED. DO NOT ATTEMPT TO REMOVE THE LOCKPLATE WITHOUT COMPRESSOR TOOL C4156 AS THE LOCKPLATE IS UNDER HEAVY SPRING TENSION.

(8) Compress lockplate with compressor tool C4156.

(9) Remove steering shaft snap ring (Fig. 8). Discard snap ring. It is not reusable.

(10) Remove compressor tool.

(11) Remove lockplate, cancelling cam, and upper bearing preload spring.

(12) Remove horn button components from canceling cam.

(13) Remove the screw and hazard warning switch knob.

(14) Remove dimmer switch actuator arm attaching screw (Fig. 9).

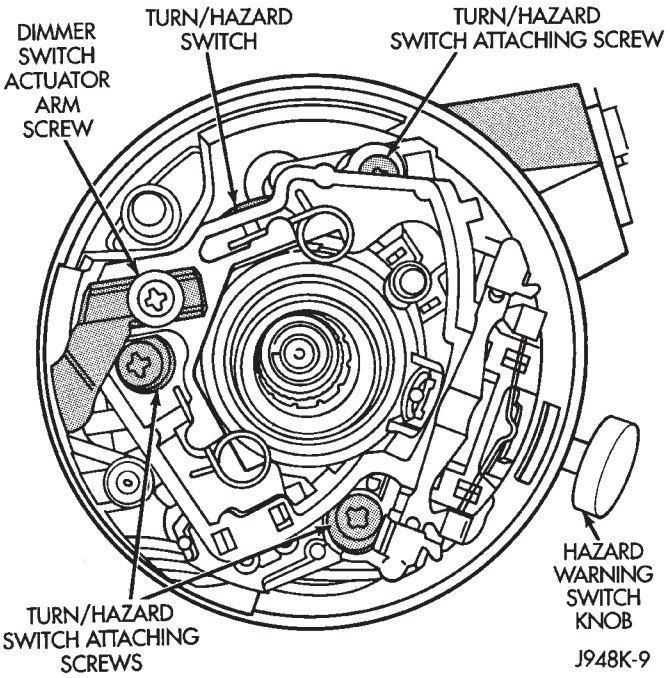

Fig. 9 Turn/Hazard Switch and Dimmer Actuating Arm Screws

(15) Remove turn/hazard switch attaching screws.
(16) Remove 6 housing screws (Fig. 10).

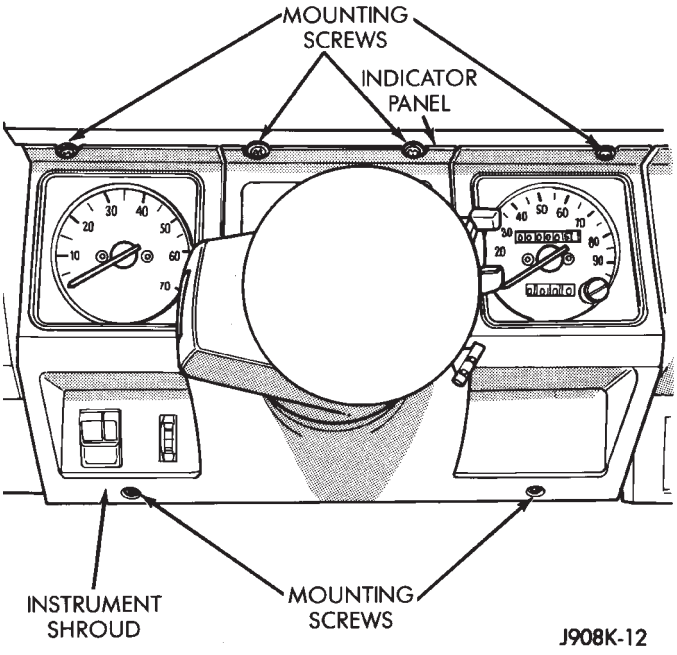

Fig. 10 Instrument Housing Remove/Install

(17) Slide housing toward steering wheel.
(18) Remove cover under column.
(19) If vehicle is equipped with a column shift, remove PRNDL cable clip (Fig. 11).

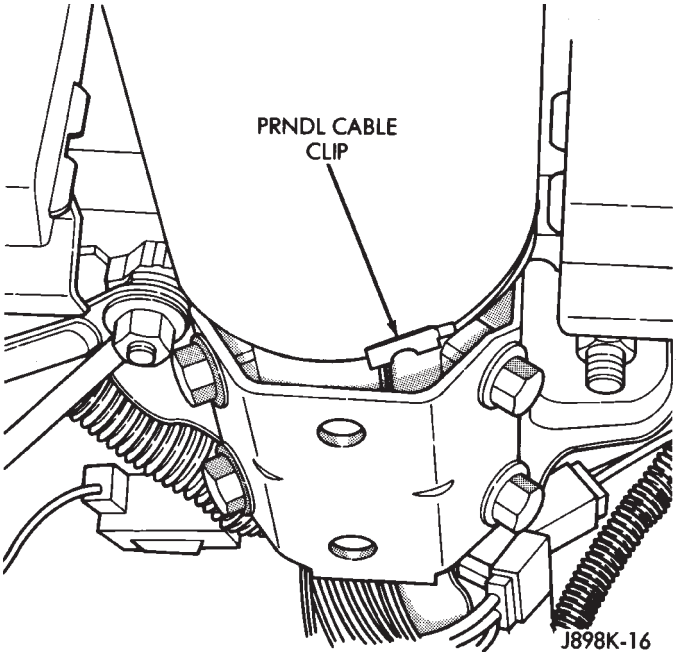

Fig. 11 PRNDL Cable Clip Remove/Install

(20) Remove 2 nuts holding steering column bracket to brake sled (Fig. 12).
(21) Remove 4 bolts holding steering column bracket to column.

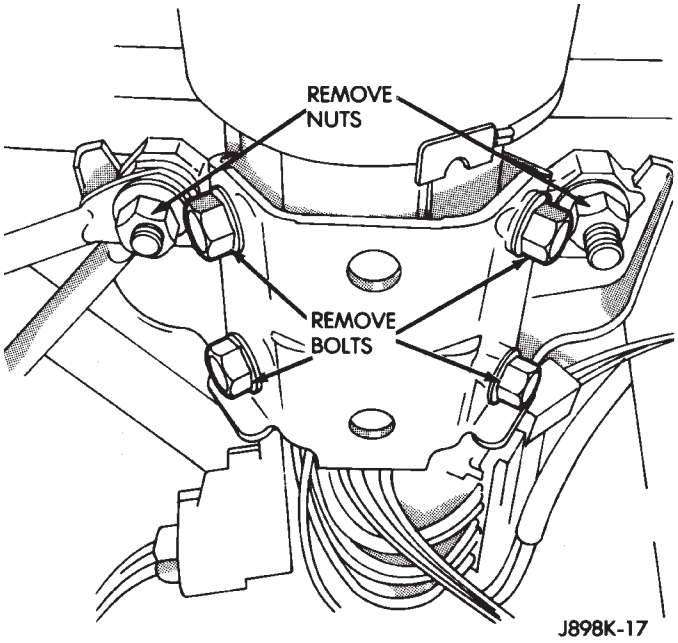

Fig. 12 Lower Steering Column

(22) Loosen column brace mounting nut at drivers side kick panel. This will allow column to drop.
(23) Push turn/hazard connector up and out of steering column connector (Fig. 13).

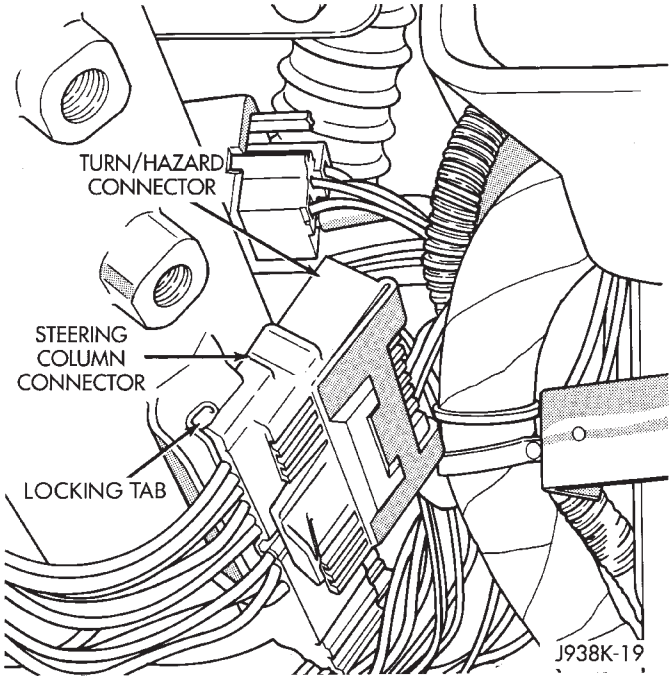

Fig. 13 Turn/Hazard Switch and Steering Column Connectors

(24) Pry up locking tabs of steering column connector and remove connector from column bracket.

(25) Tape connector to wires as shown (Fig. 14).

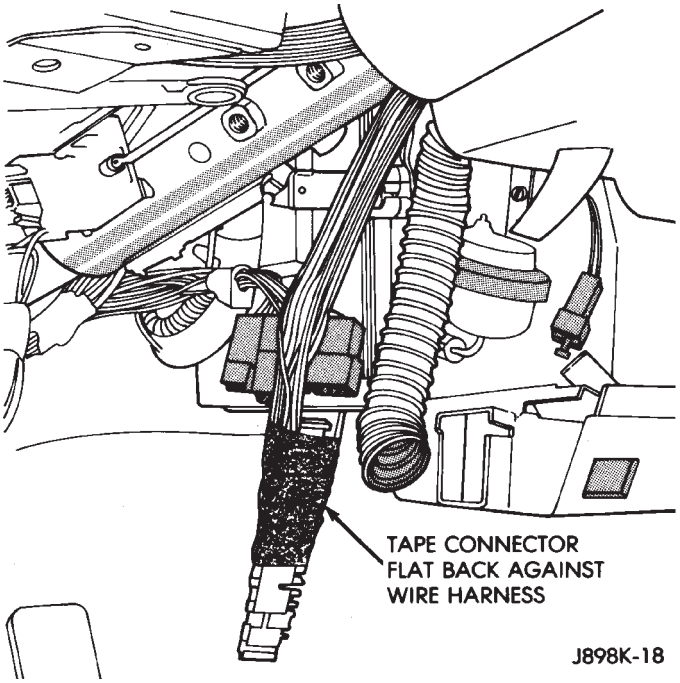

Fig. 14 Tape Wiper Switch Connector

(26) Remove plastic harness cover by pulling it up and over the weld nuts then open and slide the cover off the harness (Fig. 15).

(27) Remove the turn/hazard switch. Pull the switch and wire harness straight up and out of the housing.

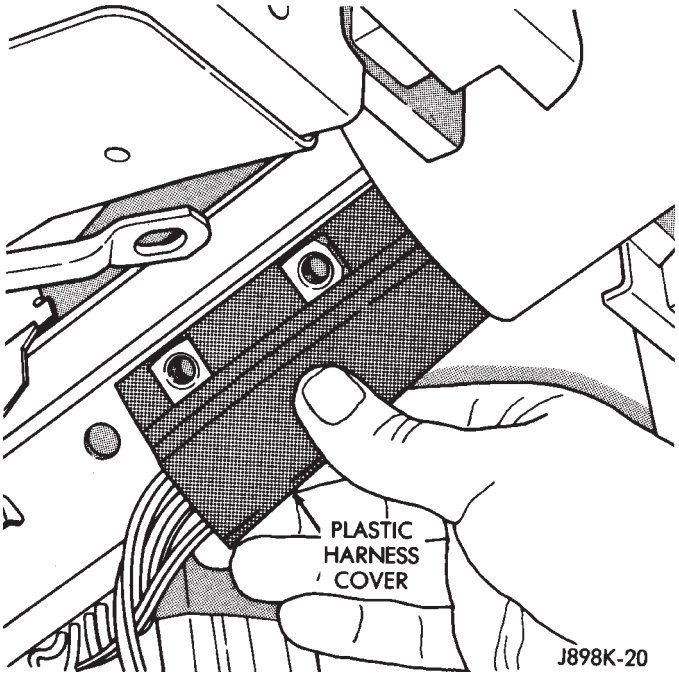

Fig. 15 Remove Plastic Harness Cover

(28) To install a new switch, reverse the removal procedure.

CAUTION: When installing a turn/hazard switch, make sure wires are laying flat on bottom inside column.

On vehicles equipped with column shift, install the PRNDL cable clip with the shift indicator on N (neutral). Move the selector through the range and make sure it lines up with each letter.

(29) Adjust the headlamp dimmer switch as described in Group 8L - Lamps.

WIPER AND WASHER SYSTEMS

CONTENTS

	page		page
DIAGNOSIS - XJ	3	GENERAL INFORMATION - YJ	10
DIAGNOSIS - YJ	12	SERVICE PROCEDURES - XJ	6
GENERAL INFORMATION - XJ	1	SERVICE PROCEDURES - YJ	17

GENERAL INFORMATION - XJ

Following are general descriptions of the major components in the XJ (Cherokee) wiper and washer systems. Refer to Group 8W - Wiring Diagrams for complete circuit descriptions and diagrams.

WINDSHIELD WIPER SYSTEM

A two-speed wiper system is standard equipment on all left-hand drive XJ models. An optional intermittent wipe system is available. The intermittent wipe system is standard equipment on all right-hand drive XJ models. The two-speed wiper system allows the driver to select from two wiper speeds. The intermittent wipe system allows the driver to select from two wiper speeds or an intermittent wipe feature that allows a delay between wipes of 2 to 15 seconds. Refer to the owner's manual for more information on wiper system controls and operation.

The wipers will operate only when the ignition switch is in the ACCESSORY or ON position. A circuit breaker near the fuseblock module protects the circuitry of the wiper system on left-hand drive models. The circuit breaker is in the fuseblock module on right-hand drive models.

WINDSHIELD WASHER SYSTEM

A electrically-operated windshield washer system is standard equipment on all XJ models. The washers will operate only when the ignition switch is in the ACCESSORY or ON position. A circuit breaker near the fuseblock module protects the circuitry of the washer system. Refer to the owner's manual for more information on washer system controls and operation.

LIFTGATE WIPER/WASHER SYSTEM

A liftgate wiper/washer system is an available option on XJ models. The liftgate wiper is a fixed cycle intermittent wipe system. A single switch on the instrument panel controls both the liftgate wiper and washer functions. These systems will operate only when the ignition switch is in the ON position. Fuse 1 in the fuseblock module protects the circuitry of both the liftgate wiper and washer. Refer to the owner's manual for more information on liftgate wiper/washer system controls and operation.

WIPER ARMS, BLADES, AND ELEMENTS

All XJ models have two 18-inch windshield wiper blades with replaceable rubber elements (squeegees). Models with the liftgate wiper option use a single 12-inch wiper blade with a replaceable rubber element (squeegee).

Caution should be exercised to protect the rubber squeegees from any petroleum-based cleaners or contaminants, which will rapidly deteriorate the squeegee rubber. If squeegees are damaged, worn or contaminated they must be replaced.

Wiper squeegees exposed to the weather for a long time tend to lose their wiping effectiveness. Periodic cleaning of the squeegees is suggested to remove deposits of salt and road film. The wiper blades, arms and windshield or liftgate glass should be cleaned with a sponge or cloth and a mild detergent or non-abrasive cleaner. If the squeegees continue to streak or smear, they should be replaced.

The blades are mounted to spring-loaded wiper arms. Spring tension of the wiper arms controls the pressure applied to the blades on the glass. The windshield wiper arms are attached by an integral latch to the two wiper pivots on the cowl grille panel at the base of the windshield. The liftgate wiper arm is attached by an integral latch directly to the liftgate wiper motor output shaft on the liftgate panel. The wiper arms and blades can not be adjusted or repaired. If faulty, they must be replaced.

WIPER LINKAGE AND PIVOTS

The wiper pivots are fastened to the cowl top panel with screws beneath the cowl cover/grille panel. Each pivot assembly can be replaced by removing the cowl grille panel, unsnapping the linkage bushing(s) from the pivot crank arm pins, and removing the mounting screws.

The two pivot cranks are joined by a connecting link, and a drive link connects the motor crank to the drive link near the left pivot. Pressed-in plastic bushings in the ends of the links can be replaced if worn or damaged.

WINDSHIELD WIPER MOTOR

The two-speed permanent magnet wiper motor has an integral transmission and park switch. The motor is mounted to the engine side of the cowl panel with a reinforcement/stud plate and a rubber-isolated mounting bracket. The wiper motor output shaft passes through the cowl panel into the cowl plenum area, where a crank arm attached to the output shaft drives the wiper drive link.

Wiper speed is controlled by current flow to the appropriate set of brushes. The wiper motor completes its wipe cycle when the switch is turned OFF, and parks the blades in the lowest portion of the wipe pattern. The wiper motor assembly can not be repaired. If faulty, the entire motor assembly must be replaced. The crank arm, mounting bracket, and reinforcement/stud plate are available for service.

LIFTGATE WIPER MOTOR

The liftgate wiper motor contains integral electronic controls and a transmission to provide three operating modes:

- intermittent wipe with a fixed 5 to 8 second delay between wipes
- constant wipe that operates when the liftgate washer is operated
- a park mode that runs the motor until the wiper blade reaches the park position after the liftgate wiper switch or ignition switch is turned OFF.

The liftgate wiper motor can not be repaired. If faulty, the entire assembly must be replaced.

WINDSHIELD WIPER/WASHER SWITCH

Controls for the windshield wiper and washer systems are contained in the multi-function switch control lever. The multi-function switch is mounted on the left side of the steering column between the steering wheel and the instrument panel. This switch also controls many other functions. The multi-function switch can not be repaired. If any function of the switch is faulty, the entire switch must be replaced.

LIFTGATE WIPER/WASHER SWITCH

The single two-function switch on the instrument panel right of the steering column controls the liftgate wiper and washer functions. The rocker-type switch features a detent in the WIPE position, but only momentary contact in the WASH position. Both the liftgate wiper and liftgate washer motors will operate continuously for as long as the switch is held in the WASH position. The switch can not be repaired; if faulty, it must be replaced.

INTERMITTENT WIPE MODULE

In addition to low and high speed, the optional intermittent wipe system has a delay mode. The delay mode has a range of 2 to 15 seconds. The length of the delay is selected with a variable resistor in the wiper (multi-function) switch and is accomplished by electronic circuitry within the intermittent wipe module. If the washer knob is depressed while the wiper (multi-function) switch is in the OFF position, the intermittent wipe module will operate the wiper motor for approximately 2 wipes and automatically turn the motor off.

The intermittent wipe module is mounted to the lower instrument panel, behind the knee blocker and near the steering column with a hook and loop fastener patch. The module can not be repaired.

WINDSHIELD WASHER NOZZLES

The two fluidic washer nozzles are riveted into openings in the cowl grille panel below the windshield and are not adjustable. Washer fluid is fed to the nozzles through hoses clipped to the underside of the cowl grille panel. The nozzles can not be repaired and, if faulty, should be replaced.

LIFTGATE WASHER NOZZLE

The single liftgate washer nozzle snaps into place on the liftgate wiper arm. Washer fluid is fed to the nozzle from the washer reservoir in the engine compartment. A liftgate washer hose system is routed through the body of the vehicle with the body wiring harness from the reservoir to the liftgate. The fluid passes through a nipple on the liftgate wiper motor output shaft bezel to a hose clipped to the underside of the wiper arm. The nozzle can not be repaired and, if faulty, should be replaced.

WASHER RESERVOIR

The washer solvent reservoir is mounted to the left front inner fender shield near the cowl panel. The same reservoir is used for both the standard front and optional liftgate washer systems. It also has a provision for a low washer fluid level sensor. Refer to Group 8E - Instrument Panel and Gauges for diagnosis and service of the sensor. The reservoir and filler cap are available for service.

WASHER PUMPS

The washer pump and motor are press-fit into a rubber grommet near the bottom of the washer reservoir. Vehicles with the optional liftgate wiper/washer system have two pumps installed in the single reservoir. A permanently lubricated and sealed motor is coupled to a rotor-type pump. Washer fluid is gravity fed from the reservoir to the pump. The pump then pressurizes the fluid and forces it through the plumbing to the nozzles when the motor is energized. The pump and motor can not be repaired. If faulty, the entire assembly must be replaced.

DIAGNOSIS - XJ

WINDSHIELD WIPER SYSTEM

(1) Remove in-line circuit breaker near fuseblock module and turn ignition switch to ACCESSORY or ON.

(a) Measure voltage at battery side of circuit breaker cavity. Meter should read battery voltage. If not OK, repair wiring from ignition switch.

(b) Measure resistance across circuit breaker terminals. Meter should read zero ohms. If not OK, replace failed circuit breaker.

(2) Unplug wiper motor side of wiring harness connector (gray) from wiper (multi-function) switch side of wiring harness connector (black), or from intermittent wipe module (if equipped) at base of steering column. Turn ignition switch to ACCESSORY or ON.

(a) Measure voltage at unplugged wiper motor side of wiring harness connector (gray) terminal D. Meter should read battery voltage. If not OK, repair wiring from circuit breaker.

(b) Turn ignition switch to OFF and measure resistance from unplugged wiper motor side of wiring harness connector (gray) terminal G to ground. Meter should read zero ohms. If not OK, repair wiring to ground.

(3) Leave ignition switch in OFF, and back probe wiring harness connector at wiper motor (Fig. 1). Measure resistance from terminal 4 of wiper motor side of connector to ground. Meter should read zero ohms. If not OK, repair wiring to ground.

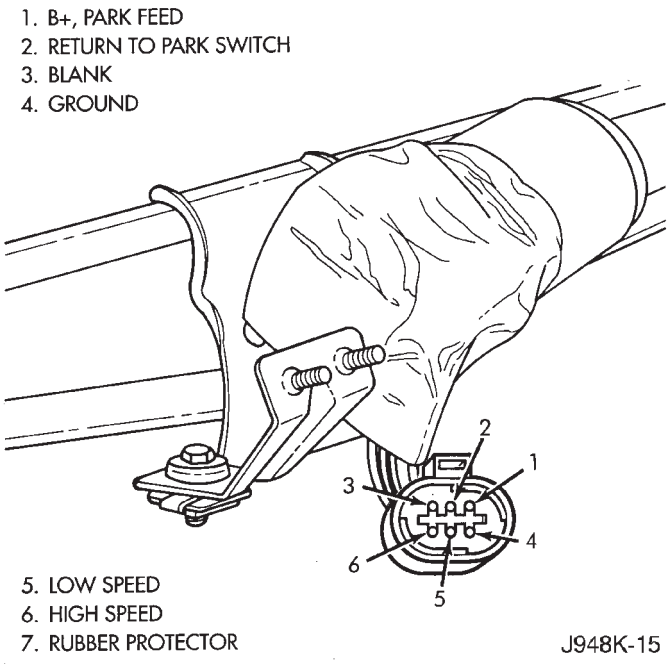

Fig. 1 Windshield Wiper Motor Connector

(4) If equipped with intermittent wipe, replace the intermittent wipe module with a known good unit and test wiper operation in all modes. If OK, replace faulty intermittent wipe module. If not OK, re-install original module and go to next step.

(5) To test the wiper/washer (multi-function) switch, see Windshield Wiper/Washer Switch. If switch tests OK, go to step 6. If not OK, replace switch and go to step 7.

(6) To test the wiper (multi-function) switch circuits, turn ignition switch to ACCESSORY or ON. Position the wiper switch as indicated in the tests below, and back probe switch side of wiring harness connector (black).

(a) Measure voltage at connector terminal E with wiper switch in LOW, MIST and with washer switch depressed. Meter should read battery voltage. If not OK, repair wiring to switch.

(b) Measure voltage at connector terminal C with wiper switch in HIGH. Meter should read battery voltage. If not OK, repair wiring to switch.

(c) With wiper switch in LOW or HIGH, measure voltage at connector terminal F, then move wiper switch to OFF. Meter should read battery voltage until wipers park and then zero volts. If OK, go to step 7. If not OK, check wiring to wiper motor, then go to step 7.

(7) To test the wiper motor, turn the ignition switch to ACCESSORY or ON. Position the wiper (multi-function) switch and back probe the motor connector (Fig. 1) as indicated.

(a) Wiper switch in any position, measure voltage at terminal 1. Meter should read battery voltage. If not OK, repair wiring from circuit breaker.

(b) Wiper switch in LOW, measure voltage at terminal 5. Meter should read battery voltage. If OK, but wipers do not operate, replace failed wiper motor. If not OK, repair wiring from switch or intermittent wipe module connector.

(c) Wiper switch in HIGH, measure voltage at terminal 6. Meter should read battery voltage. If OK, but wipers do not operate, replace failed wiper motor. If not OK, repair wiring from switch or intermittent wipe module connector.

(d) Wiper switch in LOW or HIGH, voltmeter connected to terminal 2. Turn wiper switch to OFF and observe meter. Meter should read battery voltage when switch goes to OFF, then zero volts after wipers park. If battery voltage is present, but wipers fail to park; or, if no battery voltage present, replace failed wiper motor.

WINDSHIELD WASHER SYSTEM

WITH NON-INTERMITTENT WIPE

(1) Unplug washer pump connector. Measure resistance between terminal B at pump and a clean chassis ground. Meter should read zero ohms. If not OK, repair open to ground.

(2) Turn ignition switch to ACCESSORY and washer (multi-function) switch to ON.

(a) Measure voltage at washer pump connector terminal A. Meter should read battery voltage. If OK, replace washer pump. If not OK, go to next step.

(b) Measure voltage at wiper/washer switch connector terminal B. Meter should read battery voltage. If OK, repair open to washer pump. If not OK, replace switch.

WITH INTERMITTENT WIPE

(1) Unplug washer pump connector. Measure resistance between terminal B at pump and a clean chassis ground. Meter should read zero ohms. If not OK, repair open to ground.

(2) Turn ignition switch to ACCESSORY and washer (multi-function) switch to ON.

(a) Measure voltage at intermittent wipe module switch connector terminal B (pink wire). Meter should read battery voltage. If not OK, replace wiper switch.

(b) Measure voltage at wipe module motor connector terminal B (brown wire). Meter should read battery voltage. If not OK, replace module.

(c) Measure voltage at washer pump connector terminal A at pump. Meter should read battery voltage. If OK, replace pump. If not OK, repair open from wipe module.

WINDSHIELD WIPER/WASHER SWITCH

Use an ohmmeter to test for continuity (no resistance) between the terminals of the switch as shown in the Multi-Function Switch Continuity chart (Fig. 2 or 3).

INTERMITTENT WIPE MODULE

The intermittent wipe module is non-serviceable. Refer to Group 8W - Wiring Diagrams for more information.

The intermittent wipe module is attached to the lower instrument panel cover near the steering column with a hook and loop fastener patch.

LIFTGATE WIPER SYSTEM

(1) Remove and inspect fuse 1. Replace faulty fuse, if required.

(2) Turn ignition switch to ACCESSORY and liftgate wiper switch to WASH.

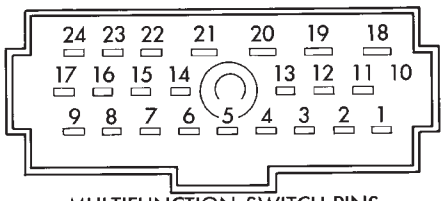

MULTIFUNCTION SWITCH PINS

TWO SPEED WIPER SWITCH CONTINUITY CHART	
SWITCH POSITION	CONTINUITY BETWEEN
OFF & PARK	PIN 1 & PIN 2
LOW	PIN 1 & PIN 4
HIGH	PIN 4 & PIN 5
WASH	PIN 3 & PIN 4

J918K-5

Fig. 2 Multi-Function Switch Continuity (Two-Speed Wipers)

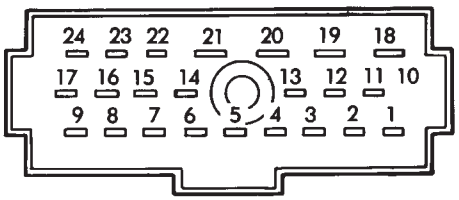

MULTIFUNCTION SWITCH PINS

SWITCH POSITION	CONTINUITY BETWEEN
OFF	PIN 6 AND PIN 7
DELAY	PIN 8 AND PIN 9 PIN 2 AND PIN 4 PIN 1 AND PIN 2 PIN 1 AND PIN 4
LOW	PIN 4 AND PIN 6
HIGH	PIN 4 AND PIN 5
WASH	PIN 3 AND PIN 4

*RESISTANCE AT MAXIMUM DELAY POSITION SHOULD BE BETWEEN 270,000 OHMS AND 330,000 OHMS.

*RESISTANCE AT MINIMUM DELAY POSITION SHOULD BE ZERO WITH OHMMETER SET ON HIGH OHM SCALE.

918J-4

Fig. 3 Multi-Function Switch Continuity (Intermittent Wipe)

(a) Measure voltage at liftgate wiper switch terminal B. Meter should read battery voltage. If not OK, repair open to fuse 1.

(b) Measure voltage at liftgate wiper switch terminals A, C and D. Meter should read battery voltage. If not OK, replace switch.

(3) Turn ignition switch to ACCESSORY, place liftgate wiper switch in WIPE. Measure voltage at lift-

gate wiper switch terminal C. Meter should read battery voltage. If not OK, replace switch.

(4) Remove liftgate cover and measure resistance from liftgate wiper motor terminal 1 to a good ground. Meter should read zero ohms. If not OK, repair open to ground splice.

(5) Turn ignition switch to ACCESSORY and liftgate wiper switch to WASH. Measure voltage at motor connector terminals 2, 3 and 4. Meter should read battery voltage. If OK, replace wiper motor. If not OK, repair open(s) to liftgate wiper switch.

LIFTGATE WASHER SYSTEM

(1) Turn ignition switch to ACCESSORY and place liftgate wiper/washer switch in WASH. Operate liftgate wiper motor. If motor does not operate check fuse 1. Replace faulty fuse, if required.

(2) Turn ignition switch to ACCESSORY and unplug liftgate washer pump connector.

(a) Measure resistance at pump connector terminal B (ignition switch OFF). Meter should read zero ohms. If not OK, repair open to ground.

(b) Measure voltage at pump connector terminal A, switch in WASH. Meter should read battery voltage. If OK, replace pump. If not OK, go to step 3.

(3) Remove switch and reconnect below instrument panel. Backprobe switch connector with ignition switch in ACCESSORY.

(a) Measure voltage at switch connector terminal B. Meter should read battery voltage. If not OK, repair open to fuse.

(b) Measure voltage at switch connector terminal A, switch in WASH. Meter should read battery voltage. If not OK, replace switch.

LIFTGATE WIPER/WASHER SWITCH

Use an ohmmeter to test switch resistance as shown in the following charts. If switch fails to perform as shown, replace faulty switch.

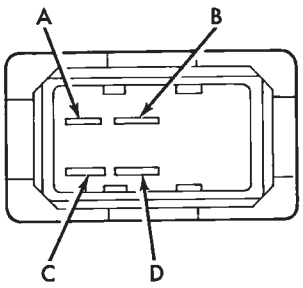

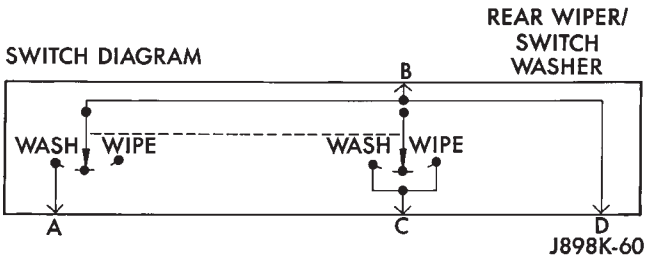

SWITCH TEST

SWITCH POSITION	TERMINALS	ZERO OHMS
OFF (NORMAL)	B AND A	NO
	B AND C	NO
WIPE	B AND C	YES
	B AND A	NO
WASH	A AND B	YES
	B AND C	YES

J908K-17

SERVICE PROCEDURES - XJ

WINDSHIELD WIPER MOTOR REMOVE/INSTALL

(1) Remove wiper arm assemblies by lifting blade off windshield and pulling out on the tab (Fig. 4) to lock wiper arm in up position.

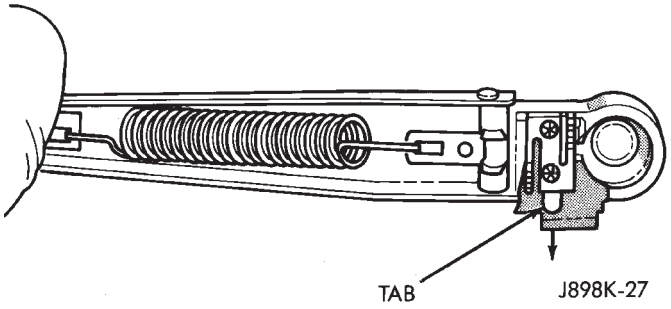

Fig. 4 Wiper Arm Remove

(2) Remove cowl trim panel. Disconnect the washer hose. Remove the cowl mounting bracket attaching nuts (Fig. 5) and pivot pin attaching screws.

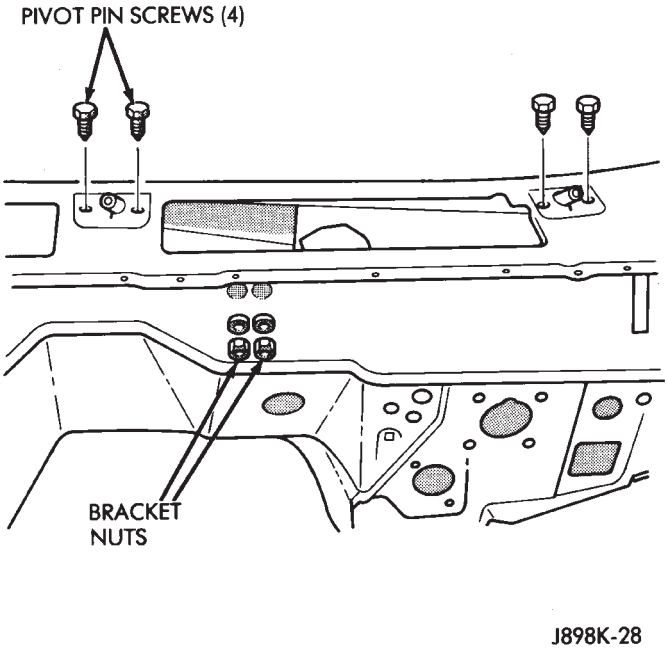

Fig. 5 Pivot Assembly Remove

(3) Disconnect wiring harness and remove the assembly.

(4) Remove the plastic motor cover.

(5) Remove bolts and nuts holding motor to linkage and remove motor.

The wiper motor is shrouded in a protective rubber boot. Care should be taken not to puncture the boot during removal or installation.

(6) Reverse removal procedures to install. Tighten wiper motor screws and nuts to 4 N·m (35 in. lbs.) torque. Install wiper arms and position as shown in Fig. 6.

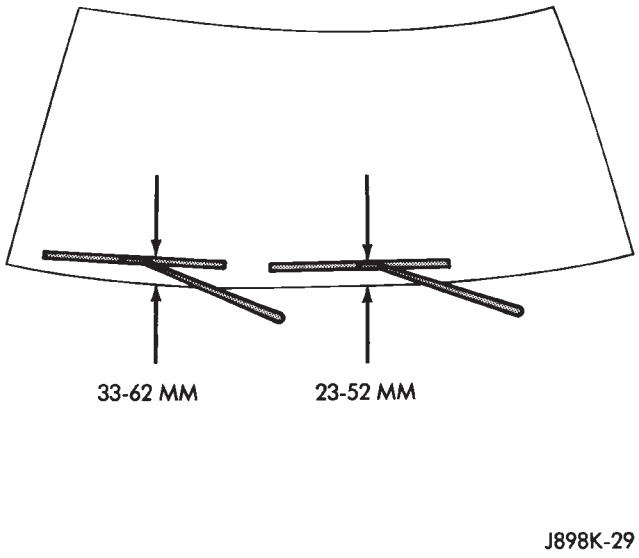

Fig. 6 Windshield Wiper Arms Install

LIFTGATE WIPER MOTOR REMOVE/INSTALL

(1) Remove the wiper arm assembly from the pivot pin by depressing the tab (Fig. 7) and pulling straight out.

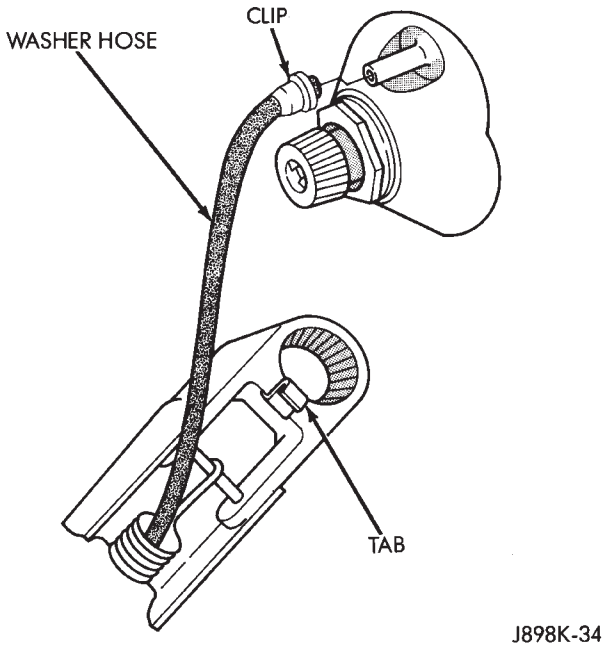

Fig. 7 Liftgate Wiper Arm Remove/Install

(2) Slide clip along hose until clip is off hose mounting.

(3) Disconnect the washer hose.

(4) Remove pivot pin retaining nut (Fig. 8).

(5) Remove external bezel and seal.

(6) Remove the liftgate interior trim panel.

(7) Disconnect the wiper motor at the wiring harness.

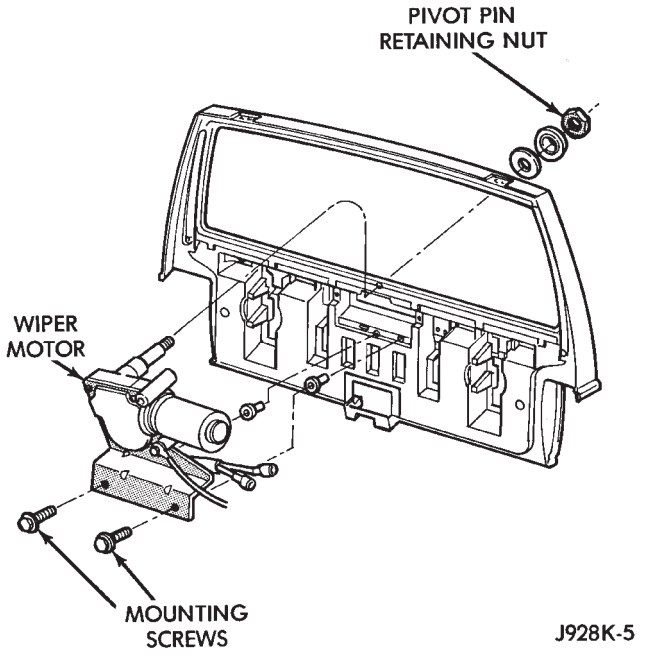

Fig. 8 Liftgate Wiper Motor Remove/Install

(8) Remove the wiper motor mounting screws.

(9) Remove the wiper motor.

(10) Reverse removal procedures to install. Tighten pivot pin retaining nut to 4 N·m (32 in. lbs.). Lubricate the bezel nipples with a small amount of water when installing washer hoses. The liftgate wiper blade should be installed parallel to window opening and no closer than 5mm to window seal when operated on a wet window (Fig. 9).

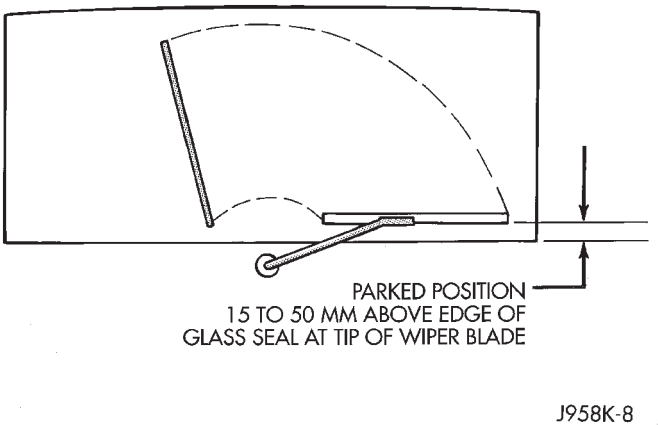

Fig. 9 Liftgate Wiper Arm Install

WINDSHIELD WIPER/WASHER SWITCH REMOVE/INSTALL

(1) Disconnect battery negative cable.

(2) Remove lower instrument panel/knee blocker assembly. Refer to Group 8E - Instrument Panel and Gauges for procedure.

(3) Remove tilt lever (tilt column only).

(4) Remove upper and lower column shrouds to gain access to the switch connector (Fig. 10).

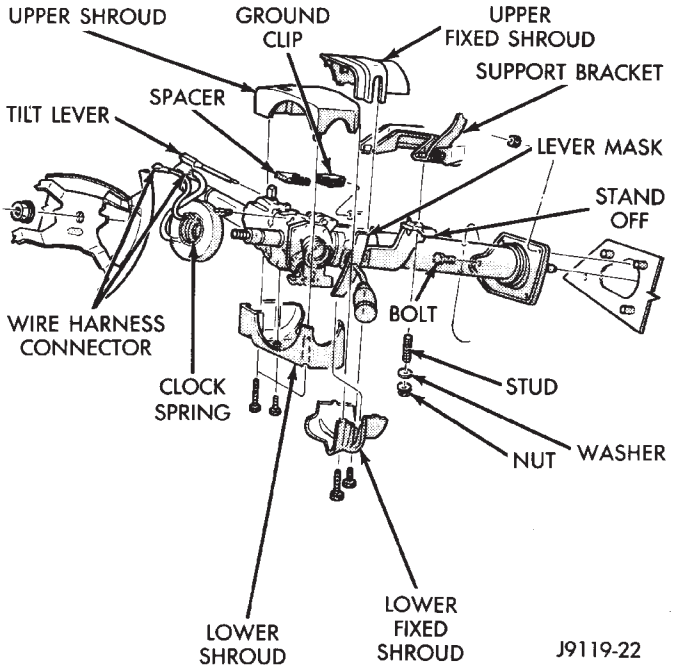

Fig. 10 Steering Column Shrouds Remove/Install

(5) Remove lower fixed column shroud.

(6) Loosen steering column upper bracket nuts. Do not remove nuts.

(7) Move upper fixed column shroud to gain access to rear of multi-function switch.

(8) Remove switch connector (Figs. 11 and 12).

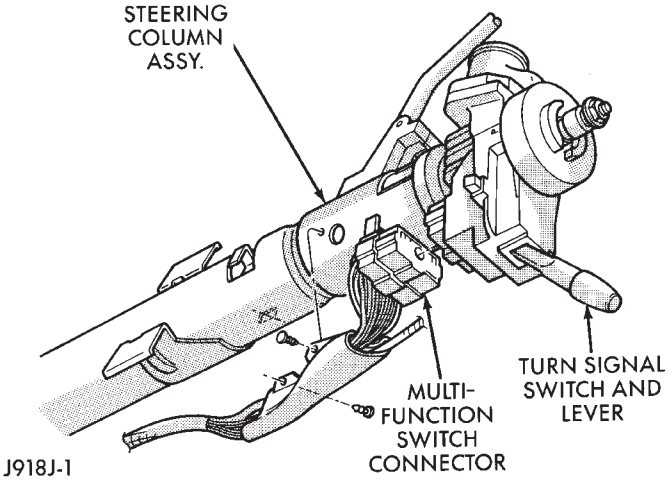

Fig. 11 Multi-Function Switch Connector

(9) Remove multi-function switch tamper proof mounting screws (tamper proof torx bit Snap On TTXR20B2 or equivalent required).

(10) Gently pull switch away from column. Loosen connector screw. The screw will remain in the connector.

(11) Remove wiring connector from multi-function switch (Fig. 13).

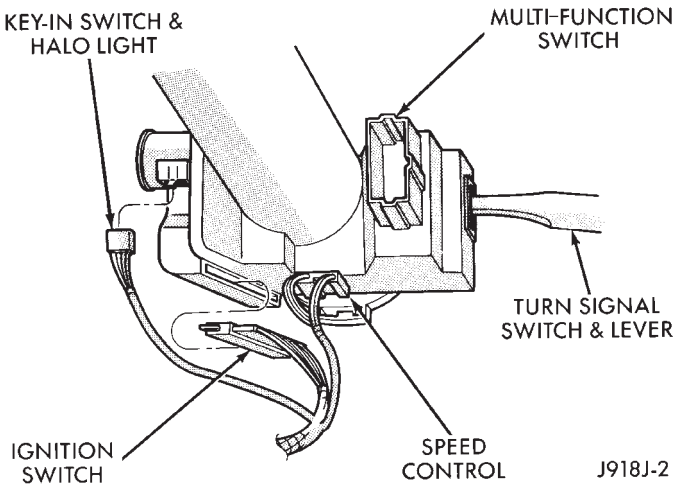

Fig. 12 Steering Column Connectors

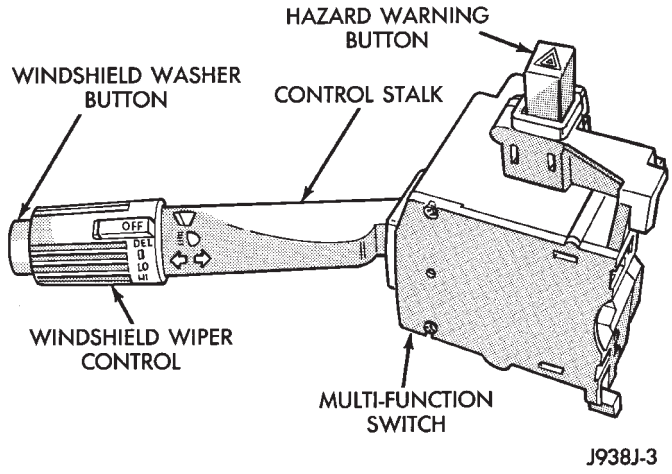

Fig. 13 Multi-Function Switch

(12) Reverse removal procedures to install. Tighten fasteners as follows:

- wiring connector to switch retaining screw to 2 N·m (17 in. lbs.)
- multi-function switch to column retaining screws to 2 N·m (17 in. lbs.)
- steering column shroud retaining screws to 2 N·m (17 in. lbs.).

LIFTGATE WIPER/WASHER SWITCH REMOVE/ INSTALL

(1) Remove the instrument cluster bezel. Refer to Group 8E - Instrument Panel and Gauges for procedure.

(2) Remove the switch housing panel.

(3) Unplug the switch connector. Slightly depress the switch mounting tabs and remove the switch (Fig. 14).

(4) Reverse removal procedures to install.

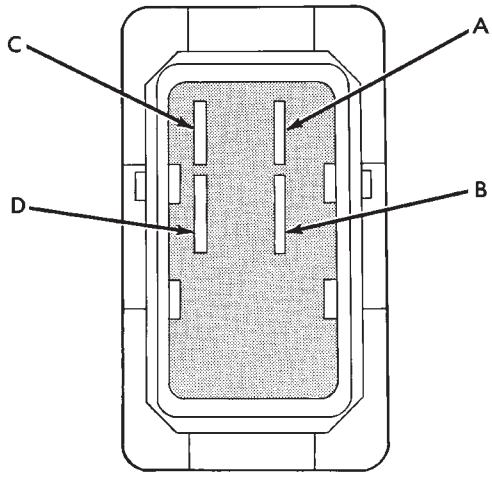

A. WIPER MOTOR FEED (PARK) C. WASHER MOTOR FEED
B. WIPER MOTOR FEED (RUN) D. BATTERY FEED

J928K-7

Fig. 14 Liftgate Wiper/Washer Switch

WASHER PUMP/RESERVOIR REMOVE/INSTALL

LEFT-HAND DRIVE

(1) Remove 2 washer reservoir attaching screws and 1 nut (Fig. 15).

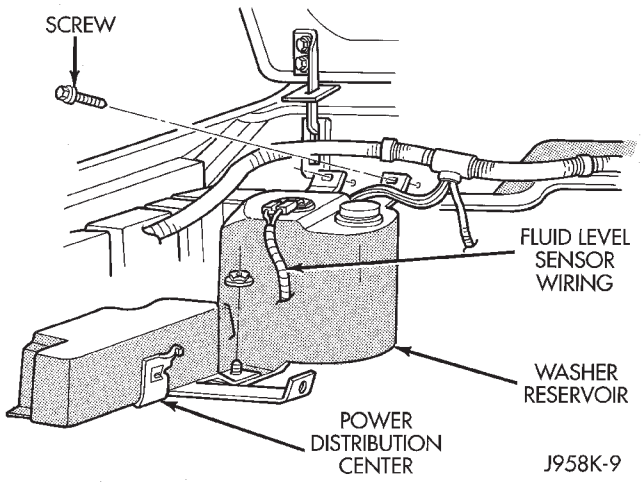

Fig. 15 Washer Reservoir Remove/Install (LHD)

(2) Disconnect hose(s) from washer pump(s) (Fig. 16) and drain solvent from reservoir into a clean container for re-use.

(3) Use a deep socket and extension inserted through the filler neck to remove washer pump filter/ nut from inside reservoir. Remove pump from reservoir.

(4) Reverse removal procedures to install.

RIGHT-HAND DRIVE

(1) Disconnect battery cables, negative cable first, and remove battery.

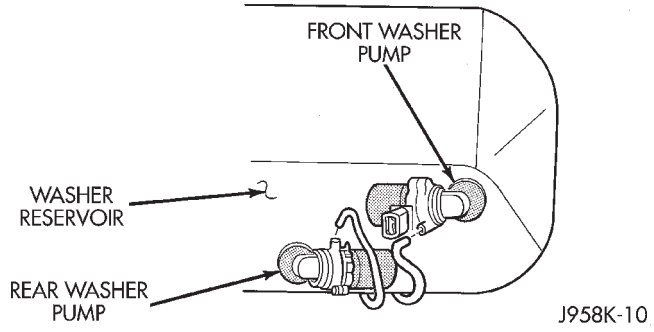

Fig. 16 Washer Pumps (LHD)

(2) Reservoir filler neck is held in reservoir by a grommet. Remove reservoir filler neck (Fig. 17) by pulling sharply away from reservoir.

(3) Remove 2 reservoir mounting screws.

(4) Raise vehicle on hoist and remove left front inner wheelhouse splash shield.

(5) Disconnect hose(s) from washer pump(s) and drain solvent from reservoir into a clean container for re-use.

(6) Disconnect wiring from pump(s) and fluid level sensor (if equipped).

(7) Remove washer pumps from reservoir by pulling out of grommets.

(8) To remove reservoir, slide slightly towards rear of vehicle to release hook (Fig. 17) from inner fender slot. Then lower front of reservoir and slide unit forward to remove.

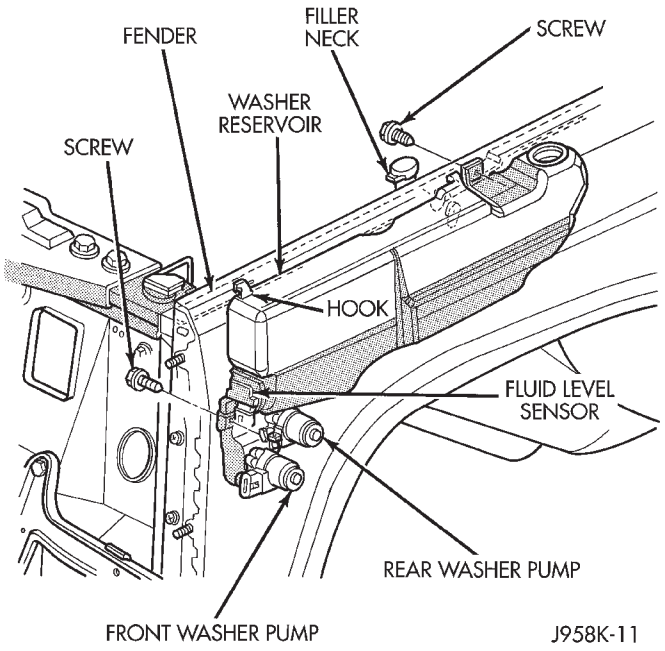

Fig. 17 Washer Reservoir and Pumps (RHD)

(9) Reverse removal procedures to install. Use new grommets when installing washer pumps.

GENERAL INFORMATION - YJ

Following are general descriptions of the major components in the YJ (Wrangler) wiper and washer systems. Refer to Group 8W - Wiring Diagrams for complete circuit descriptions and diagrams.

WINDSHIELD WIPER SYSTEM

A two-speed wiper system is standard equipment on all YJ models. An optional intermittent wipe system is available. The standard system allows the driver to select from two wiper speeds. The optional intermittent wipe system allows the driver to select from two wiper speeds or an intermittent wipe feature that allows a delay between wipes of 2 to 15 seconds. Refer to the owner's manual for more information on wiper system controls and operation.

The wipers will operate only when the ignition switch is in the ACCESSORY or ON position. A circuit breaker in the fuseblock module protects the circuitry of the wiper system.

WINDSHIELD WASHER SYSTEM

A electrically-operated windshield washer system is standard equipment on all YJ models. The washers will operate only when the ignition switch is in the ACCESSORY or ON position. A circuit breaker in the fuseblock module protects the circuitry of the washer system. Refer to the owner's manual for more information on washer system controls and operation.

LIFTGATE WIPER/WASHER SYSTEM

A liftgate wiper/washer system is an available option on YJ models equipped with the optional hardtop. The liftgate wiper is a fixed cycle wipe system. A single switch on the instrument panel controls both the liftgate wiper and washer functions. These systems will operate only when the ignition switch is in the ON position. Fuse 1 in the fuseblock module protects the circuitry of both the liftgate wiper and washer. Refer to the owner's manual for more information on liftgate wiper/washer system controls and operation.

WIPER ARMS, BLADES, AND ELEMENTS

All YJ models have two 12-inch windshield wiper blades with replaceable rubber elements (squeegees). Models with the liftgate wiper option use a single 16-inch wiper blade with a replaceable rubber element (squeegee).

Caution should be exercised to protect the rubber squeegees from any petroleum-based cleaners or contaminants, which will rapidly deteriorate the squeegee rubber. If squeegees are damaged, worn or contaminated they must be replaced.

Wiper squeegees exposed to the weather for a long time tend to lose their wiping effectiveness. Periodic cleaning of the squeegees is suggested to remove deposits of salt and road film. The wiper blades, arms and windshield or liftgate glass should be cleaned with a sponge or cloth and a mild detergent or non-abrasive cleaner. If the squeegees continue to streak or smear, they should be replaced.

The blades are mounted to spring-loaded wiper arms. Spring tension of the wiper arms controls the pressure applied to the blades on the glass. The windshield wiper arms are attached by an integral latch to the two wiper pivots on the windshield frame at the base of the windshield. The liftgate wiper arm is attached by an integral latch directly to the liftgate wiper motor output shaft on the liftgate glass. The wiper arms and blades can not be adjusted or repaired. If faulty, they must be replaced.

WIPER LINKAGE AND PIVOTS

The wiper pivots are fastened to the windshield frame with nuts. The pivots and linkage are serviced through access holes in the interior side of the lower windshield frame. The two pivots and their connecting link are serviced as a unit. The drive link, which connects the motor crank arm to the left pivot, is serviced separately.

WINDSHIELD WIPER MOTOR

The two-speed permanent magnet wiper motor has an integral transmission and park switch. The motor is mounted to a cover plate on the interior side of the lower windshield frame. The wiper motor output shaft passes through a gasket and the cover plate into the space between the inner and outer lower windshield frame, where the crank arm attached to the output shaft drives the wiper drive link.

Wiper speed is controlled by current flow to the appropriate set of brushes. The wiper motor completes its wipe cycle when the switch is turned OFF, and parks the blades in the lowest portion of the wipe pattern. The wiper motor assembly can not be repaired. If faulty, the entire motor assembly must be replaced. The cover plate, gasket and drive link to crank arm retaining ring are available for service.

LIFTGATE WIPER MOTOR

The liftgate wiper motor operates in three modes:

- constant wipe that operates when the liftgate wiper/washer switch is placed in the Wipe position
- constant wipe that operates when the liftgate washers are operated
- a park mode that runs the motor until the wiper blade reaches the park position after the liftgate wiper switch or ignition switch is turned OFF.

The liftgate wiper motor can not be repaired. If faulty, the entire assembly must be replaced.

WINDSHIELD WIPER/WASHER SWITCH

Controls for the windshield wiper and washer systems are contained in the turn signal switch lever. The turn signal switch lever is mounted on the left side of the steering column between the steering wheel and the instrument panel. The wiper/washer switch can not be repaired. If any function of the switch is faulty, the entire switch must be replaced.

LIFTGATE WIPER/WASHER SWITCH

The single two-function switch on the instrument panel right of the steering column controls the liftgate wiper and washer functions. The rocker-type switch features a detent in the WIPE position, but only momentary contact in the WASH position. Both the liftgate wiper and liftgate washer motors will operate continuously for as long as the switch is held in the WASH position. The switch can not be repaired; if faulty, it must be replaced.

INTERMITTENT WIPE MODULE

In addition to low and high speed, the optional intermittent wipe system has a delay mode. The delay mode has a range of 2 to 15 seconds. The length of the delay is selected with a variable resistor in the wiper switch and is accomplished by electronic circuitry within the intermittent wipe module. If the washer knob is depressed while the wiper switch is in the OFF position, the intermittent wipe module will operate the wiper motor for approximately 2 wipes and automatically turn the motor off.

The intermittent wipe module is mounted to a bracket behind the lower instrument panel, near the steering column with a hook and loop fastener patch. The module can not be repaired.

WINDSHIELD WASHER NOZZLES

The two fluidic washer nozzles are screwed into openings in the cowl panel below the windshield and are not adjustable. Washer fluid is fed to the nozzles through hoses underneath the cowl panel. The nozzles can not be repaired and, if faulty, should be replaced.

LIFTGATE WASHER NOZZLE

The single liftgate washer nozzle is installed through the liftgate glass and secured with a nut on the inside of the glass. Washer fluid is fed to the nozzle from the washer reservoir in the engine compartment. A liftgate washer hose system is routed through the body of the vehicle with the body wiring harness from the reservoir to the liftgate. The nozzle can not be repaired and, if faulty, should be replaced.

WASHER RESERVOIR

The washer solvent reservoir is mounted with a bracket to the left front inner fender shield near the cowl panel. The same reservoir is used for both the standard front and optional liftgate washer systems. The reservoir and filler cap are available for service.

WASHER PUMPS

The washer pump and motor are press-fit into a rubber grommet near the bottom of the washer reservoir. Vehicles with the optional liftgate wiper/washer system have two pumps installed in the single reservoir. A permanently lubricated and sealed motor is coupled to a rotor-type pump. Washer fluid is gravity fed from the reservoir to the pump. The pump then pressurizes the fluid and forces it through the plumbing to the nozzles when the motor is energized. The pump and motor can not be repaired. If faulty, the entire assembly must be replaced.

DIAGNOSIS - YJ

WINDSHIELD WIPER SYSTEM

(1) Remove circuit breaker from fuseblock module and turn ignition switch to ACCESSORY or ON.

(a) Measure voltage at battery side of circuit breaker cavity. Meter should read battery voltage. If not OK, repair wiring from ignition switch.

(b) Measure resistance across circuit breaker terminals. Meter should read zero ohms. If not OK, replace failed circuit breaker.

(2) Unplug wiper motor side of wiring harness connector (gray) from wiper switch side of wiring harness connector (black), or from intermittent wipe module (if equipped) at base of steering column. Turn ignition switch to ACCESSORY or ON.

(a) Measure voltage at unplugged wiper motor side of wiring harness connector (gray) terminal D. Meter should read battery voltage. If not OK, repair wiring from circuit breaker.

(b) Turn ignition switch to OFF and measure resistance from unplugged wiper motor side of wiring harness connector (gray) terminal G to ground. Meter should read zero ohms. If not OK, repair wiring to ground.

(3) Leave ignition switch in OFF, and back probe wiring harness connector at wiper motor. Measure resistance from terminal E of wiper motor side of connector to ground. Meter should read zero ohms. If not OK, repair wiring to ground.

(4) If equipped with intermittent wipe, turn ignition switch to ACCESSORY or ON. Turn wiper switch to LOW or HIGH. Unplug wiper switch side of wiring harness connector (black) from intermittent wipe module. Then plug both connectors that have been removed from intermittent wipe module into each other.

CAUTION: DO NOT move the wiper switch to DELAY with the intermittent wipe module removed from the circuit. If the switch is moved to the DELAY position during the next step, the switch will be damaged.

Test wiper operation in LOW and HIGH speed modes, and test washer operation. If these modes were inoperative, but are OK now, replace failed intermittent wipe module.

(5) To test the wiper/washer switch, see Windshield Wiper/Washer Switch Testing. Turn ignition switch to OFF. Position the wiper switch as indicated, and back probe wiper switch side of wiring harness connector (black). If switch tests OK, go to step 6. If not OK, replace switch and go to step 7.

(6) To further test the wiper/washer switch, turn ignition switch to ACCESSORY or ON. Position the wiper switch as indicated in the tests below, and back probe wiper switch side of wiring harness connector (black).

(a) Measure voltage at connector terminal E with wiper switch in LOW, MIST and with washer switch depressed. Meter should read battery voltage. If not OK, replace switch.

(b) Measure voltage at connector terminal C with wiper switch in HIGH. Meter should read battery voltage. If not OK, replace switch.

(c) With wiper switch in LOW or HIGH, measure voltage at connector terminal F, then move wiper switch to OFF. Meter should read battery voltage until wipers park and then zero volts. If OK, go to step 7. If not OK, check wiring to wiper motor, then go to step 8.

(7) To test the wiper motor, turn the ignition switch to ACCESSORY or ON. Position the wiper switch and back probe the motor connector as indicated.

(a) Wiper switch in any position, measure voltage at terminal B. Meter should read battery voltage. If not OK, repair wiring from circuit breaker.

(b) Wiper switch in LOW, measure voltage at terminal A. Meter should read battery voltage. If OK, but wipers do not operate, replace failed wiper motor. If not OK, repair wiring from switch or intermittent wipe module connector.

(c) Wiper switch in HIGH, measure voltage at terminal H. Meter should read battery voltage. If OK, but wipers do not operate, replace failed wiper motor. If not OK, repair wiring from switch or intermittent wipe module connector.

(d) Wiper switch in LOW or HIGH, voltmeter connected to terminal D. Turn wiper switch to OFF and observe meter. Meter should read battery voltage when switch goes to OFF, then zero volts after wipers park. If battery voltage is present, but wipers fail to park; or, if no battery voltage present, replace failed wiper motor.

WINDSHIELD WASHER SYSTEM

WITH NON-INTERMITTENT WIPE

(1) Measure resistance from washer pump connector terminal B to a clean chassis ground. Meter should read zero ohms. If not OK, repair open between terminal B and ground.

(2) Turn ignition switch to ON and press washer switch.

(a) Measure voltage at switch connector terminal B. Meter should read battery voltage. If not OK, replace wiper/washer switch.

(b) Measure voltage at washer pump connector terminal A. Meter should read battery voltage. If

OK, replace pump. If not OK, repair open between switch connector and pump connector.

WITH INTERMITTENT WIPE

(1) Measure resistance from washer pump connector terminal B to a clean chassis ground. Meter should read zero ohms. If not OK, repair open between terminal B and ground.

(2) Turn ignition switch to ON and rotate washer switch tab forward.

(a) Measure voltage at wiper/washer switch connector terminal B located at intermittent wipe module. Meter should read battery voltage. If not OK, replace wiper switch.

(b) Measure voltage at intermittent wipe module connector terminal B (to washer pump). Meter should read battery voltage. If not OK, replace intermittent wipe module.

(c) Measure voltage at washer pump connector terminal A. Meter should read battery voltage. If OK, replace pump. If not OK, repair open from intermittent wipe module connector terminal B.

WINDSHIELD WIPER/WASHER SWITCH

To test windshield wiper/washer switches, perform the resistance tests shown in the following charts. If switch fails any test, replace faulty switch.

NON-INTERMITTENT WIPE SWITCH TESTING

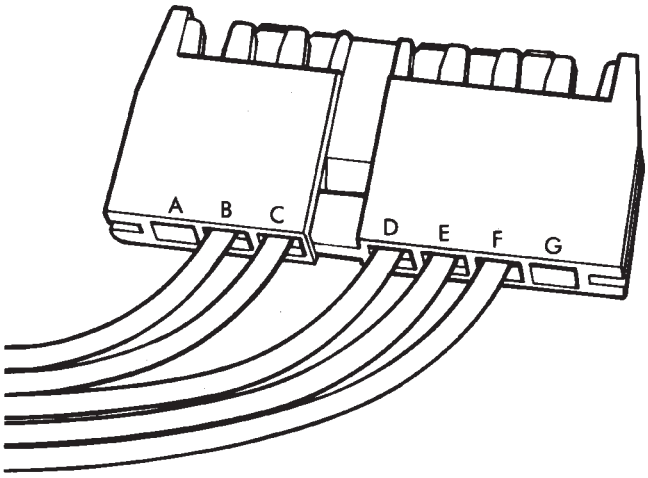

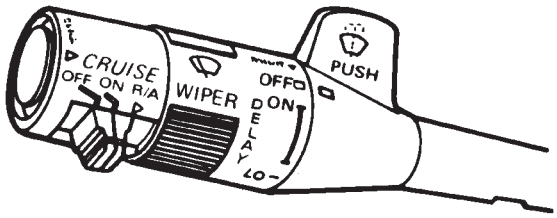

B - WASHER PINK
C - HI VIOLET
D - IGNITION WHITE
E - LO/PARK GRAY
F - OFF/PARK YELLOW

SWITCH DIAGRAM

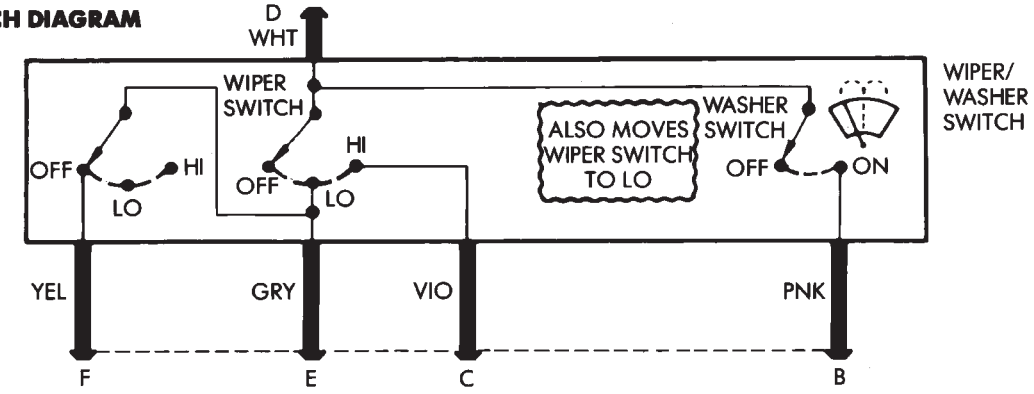

SWITCH TEST

SWITCH POSITION	TERMINALS	ZERO OHMS
Off	E and F	Yes
	All Others	No
Lo	D and E	Yes
	All Others	No
Hi	C and D	Yes
	All Others	No
Wash	B and D	Yes
	D and E	Yes
	All Others	No

J898K-49

INTERMITTENT WIPE SWITCH TESTING

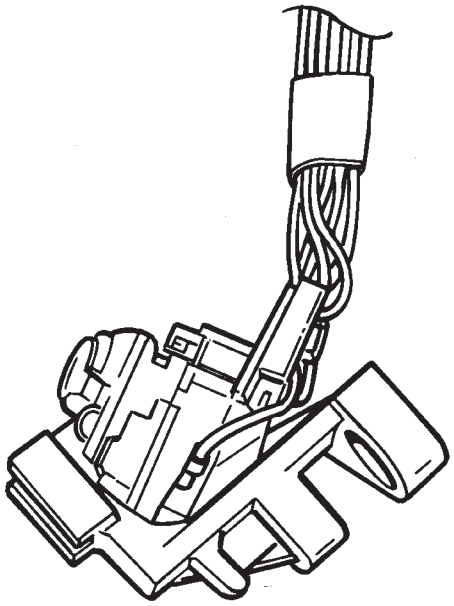

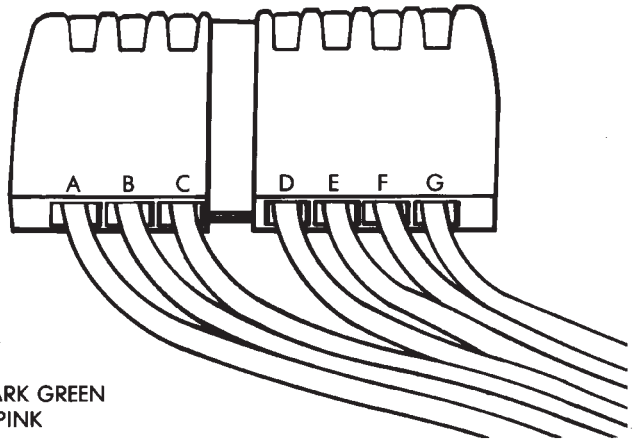

A - DELAY DARK GREEN
B - WASHER PINK
C - HI VIOLET
D - IGNITION WHITE
E - LO/MIST PARK GRAY
F - OFF/PARK YELLOW
G - DELAY BROWN

SWITCH DIAGRAM

WIPER/WASHER SWITCH

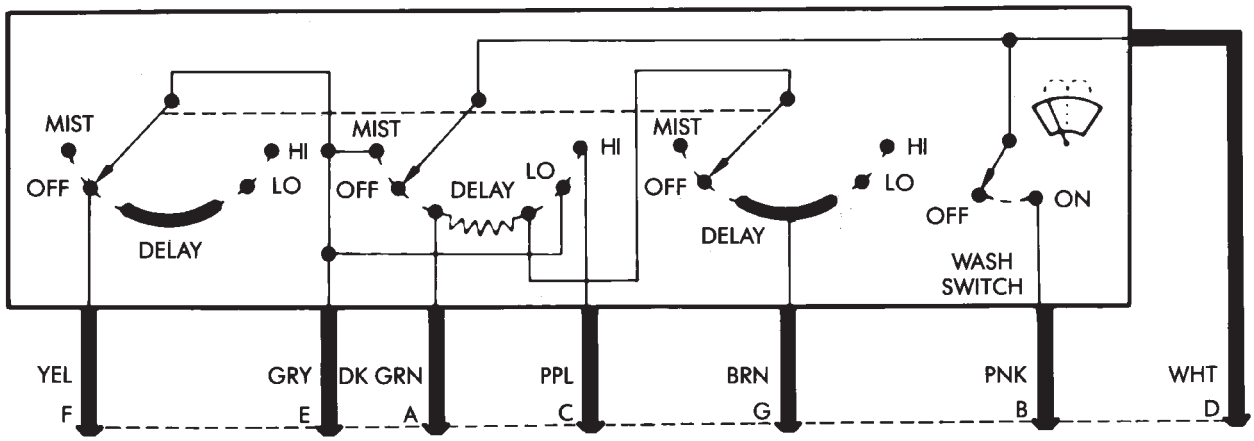

SWITCH TEST

SWITCH POSITION	TERMINALS	ZERO OHMS
Off	E and F	Yes
	All Others	No
Lo	D and E	Yes
	All Others	No
Hi	C and D	Yes
	All Others	No
Wash/Mist	B and D	Yes
	D and E	Yes
	All Others	No
Delay	A and G	152-480K ohms

J898K-50

LIFTGATE WIPER/WASHER SYSTEM

(1) Turn ignition switch to ON and liftgate wiper/ washer switch to WASH.

(a) Measure voltage at switch connector terminal P. Meter should read battery voltage. If not OK, check fuse 1.

(b) Measure voltage at switch connector terminal B. Meter should read battery voltage. If not OK, replace switch.

(c) Measure voltage at switch connector terminal A. Meter should read battery voltage. If not OK, replace switch.

(2) Unplug liftgate washer pump connector.

(a) With ignition switch in OFF position, measure resistance at pump connector black wire to ground. Meter should read zero ohms. If not OK, repair open to ground.

(b) With ignition switch in ON position, measure voltage at pump connector brown/white wire, switch in WASH. Meter should read battery voltage. If OK, replace pump. If not OK, check wiring.

(3) Turn ignition switch to ON, unplug liftgate wiper motor connector and place wiper switch in WIPE.

(a) Measure resistance at motor connector terminal B to ground. Meter should read zero ohms. If not OK, repair open to ground.

(b) Measure voltage at motor connector terminal A. Meter should read battery voltage. If not OK, check wiring to fuse.

(c) Measure voltage at motor connector terminal C. Meter should read battery voltage. If OK, replace motor. If not OK, repair open to switch.

LIFTGATE WIPER/WASHER SWITCH

See Liftgate Wiper/Washer Switch Diagram (Fig. 1) and Liftgate Wiper Switch Tests (Fig. 2). Check switch continuity and resistance accordingly. If switch fails any test, replace faulty switch.

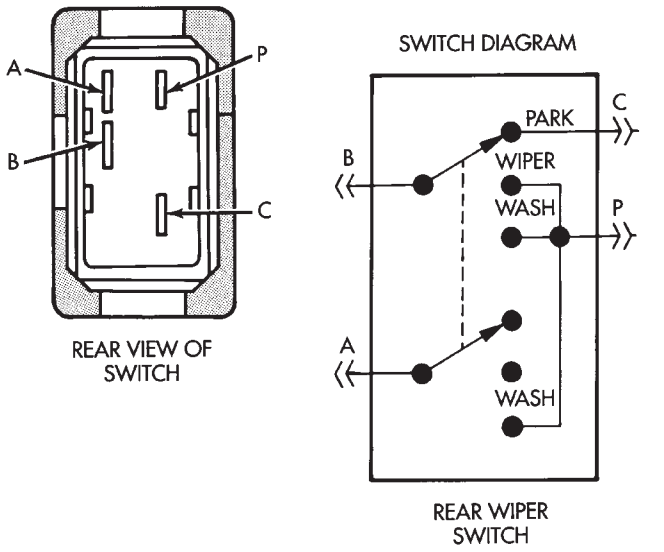

Fig. 1 Liftgate Wiper/Washer Switch Diagram

SWITCH TEST

SWITCH POSITION	TERMINALS	ZERO OHMS
OFF (NORMAL)	P AND B	NO
	P AND A	NO
WIPE	P AND B	YES
	P AND A	NO
WASH	P AND B	YES
	P AND A	YES

J928K-8

Fig. 2 Liftgate Wiper/Washer Switch Tests

SERVICE PROCEDURES - YJ

WINDSHIELD WIPER BLADE REMOVE/INSTALL

(1) Rotate the wiper blade release (Fig. 3) clockwise. This will release the wiper blade from the pivot pin.

CAUTION: Take care to ensure that the wiper arm does not strike the windshield after the wiper blade has been removed.

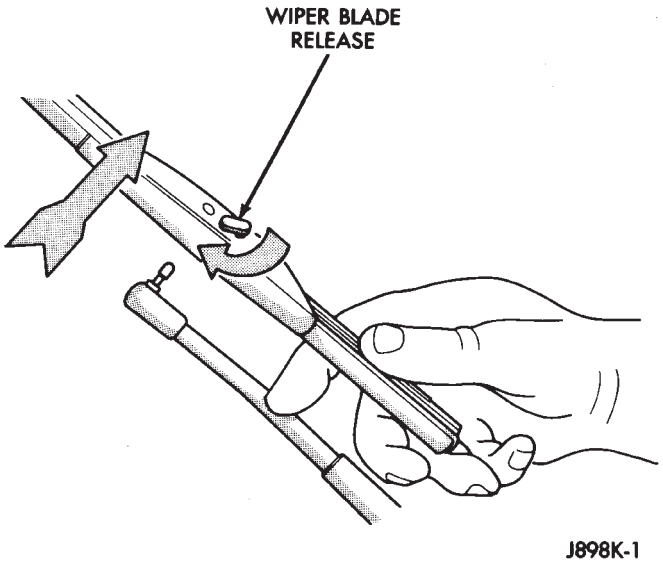

Fig. 3 Wiper Blade Remove/Install

(2) To install, place the blade assembly on the wiper arm and snap the blade assembly into position.

WINDSHIELD WIPER ARM REMOVE/INSTALL

(1) Pull the wiper arm forward.

(2) Insert an ice pick type tool into the hole (Fig. 4).

(3) Grasp the wiper arm above the pivot nut.

(4) Pull and remove the wiper arm assembly.

(5) To install, push the wiper arm over the pivot shaft. Be sure the pivot shaft is in the park position and the wiper arm is positioned correctly on the windshield (Fig. 5).

LIFTGATE WIPER ARM REMOVE/INSTALL

(1) Install wiper arm remover, Snap On A192 or equivalent, on wiper arm (Fig. 6). Lift arm and then remove from pivot shaft.

CAUTION: Do not use a screwdriver or other prying tool to remove an arm. This may distort it in a way that will allow it to come off the pivot shaft in the future despite how carefully it is installed. NEVER push or bend the spring clip in the base of the arm in an attempt to release the arm. This clip is self releasing.

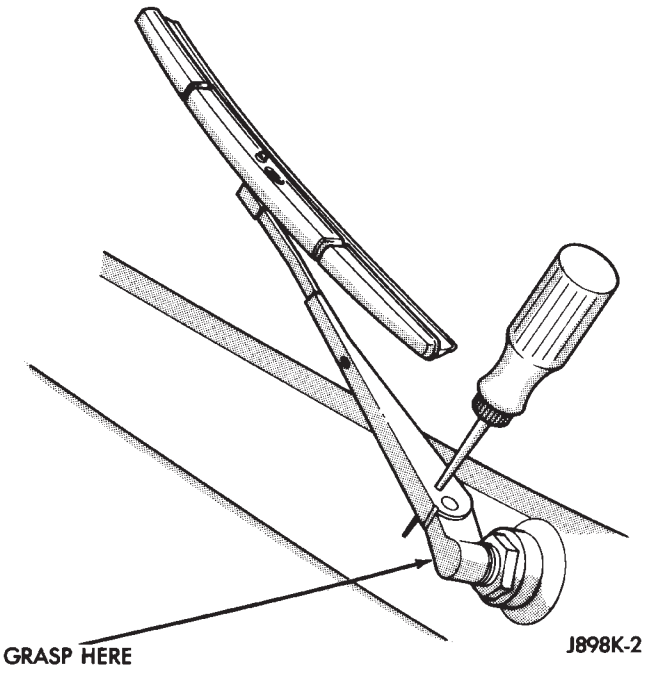

Fig. 4 Windshield Wiper Arm Remove/Install

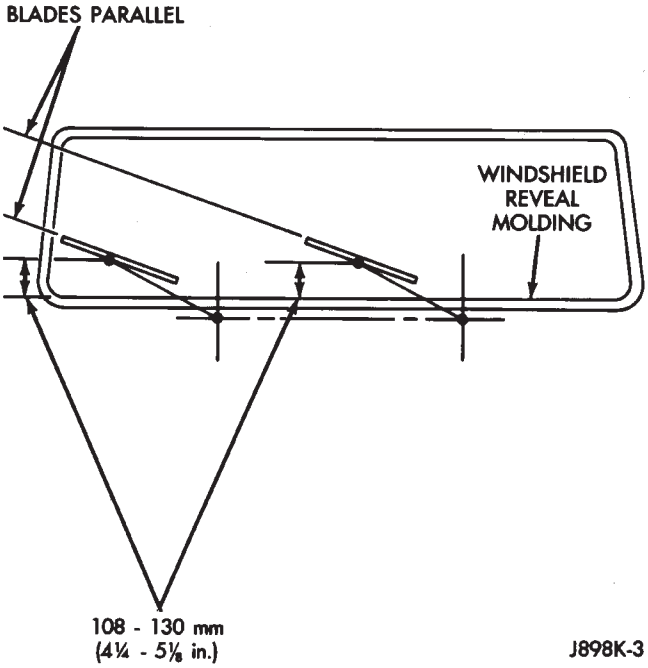

Fig. 5 Windshield Wiper Arm Indexing

(2) Reverse removal procedures to install.

(3) Wet the liftgate glass and check the park position by operating the wiper motor several times.

WINDSHIELD WIPER LINKAGE AND PIVOTS REMOVE/INSTALL

(1) Remove the left and right wiper arms.

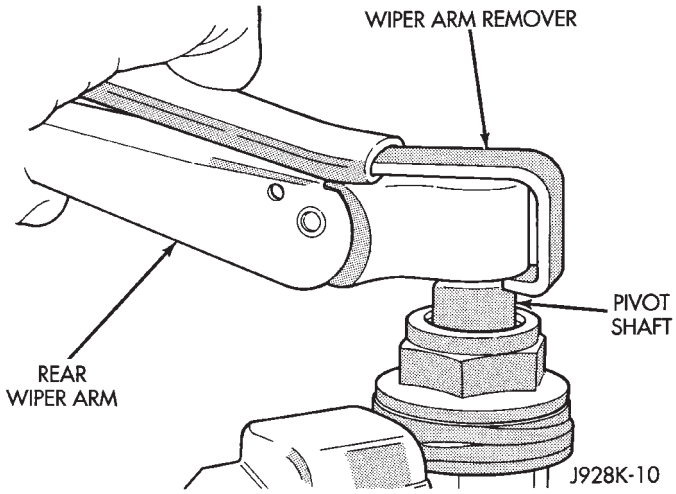

Fig. 6 Liftgate Wiper Arm Remove/Install

(2) Remove the nuts attaching the pivots to the windshield frame.

(3) Remove the necessary hard or soft top components from the windshield frame.

(4) Remove the windshield holddown bolts in the lower corners of the instrument panel and fold the windshield forward.

(5) Remove wiper motor mounting screws (Fig. 7).

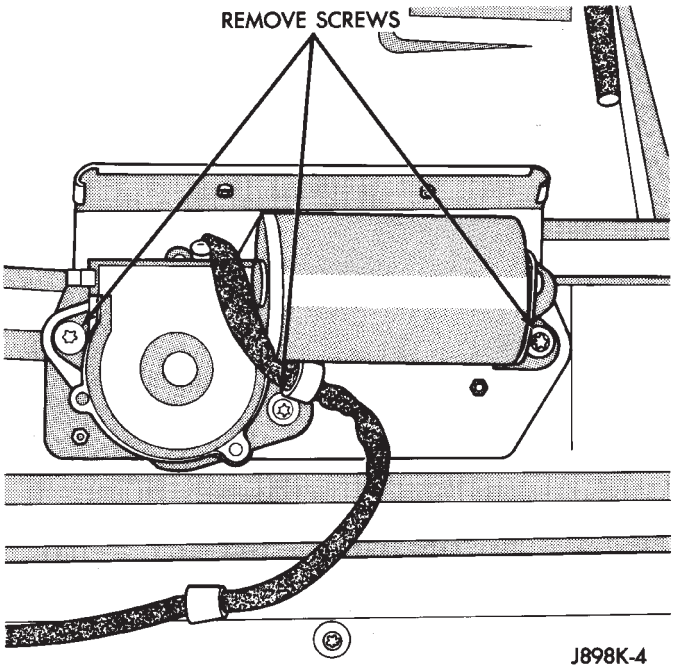

Fig. 7 Windshield Wiper Motor Mounts

(6) Disconnect wiper drive link (Fig. 8).

(7) Remove motor wiring clip from base of windshield frame.

(8) Remove 4 inboard screws holding seal to bottom of windshield frame (protruding screw ends interfere with pivot and connecting link removal and installation).

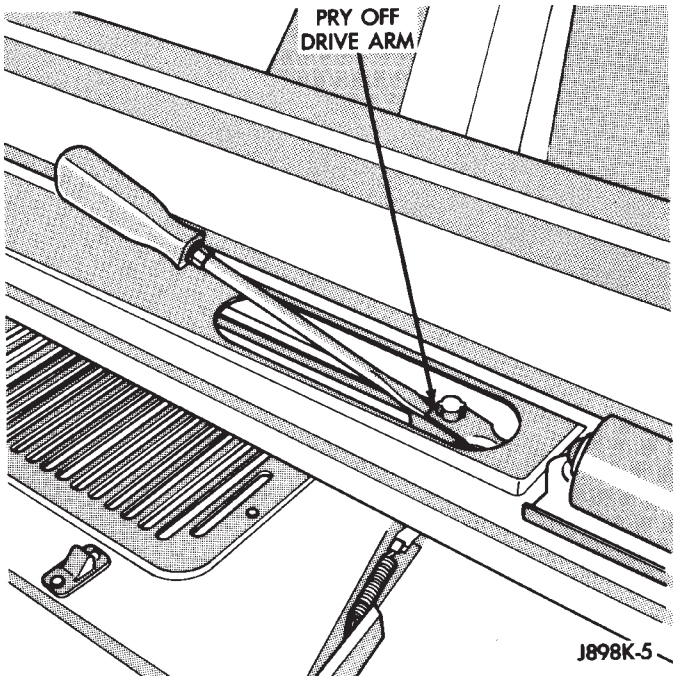

Fig. 8 Disconnect Drive Link

(9) Grasp motor and pull motor and drive link out of access hole (Fig. 9).

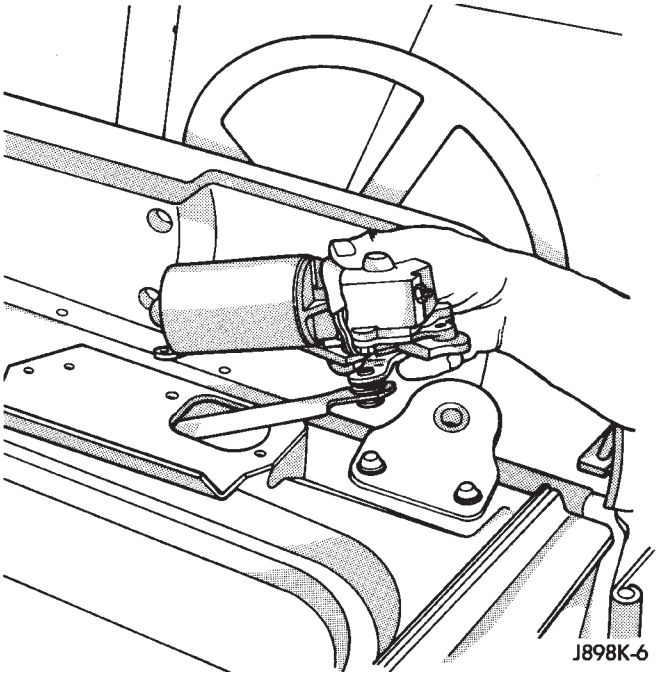

Fig. 9 Windshield Wiper Motor and Drive Link

(10) Remove pivot and connecting link assembly through access hole.

(11) Pry drive link off the motor pivot. DO NOT remove crank arm attaching nut (Fig. 10).

(12) To install, assemble wiper drive link onto motor crank arm (Fig. 11).

(13) Install pivot and connecting link assembly in windshield frame.

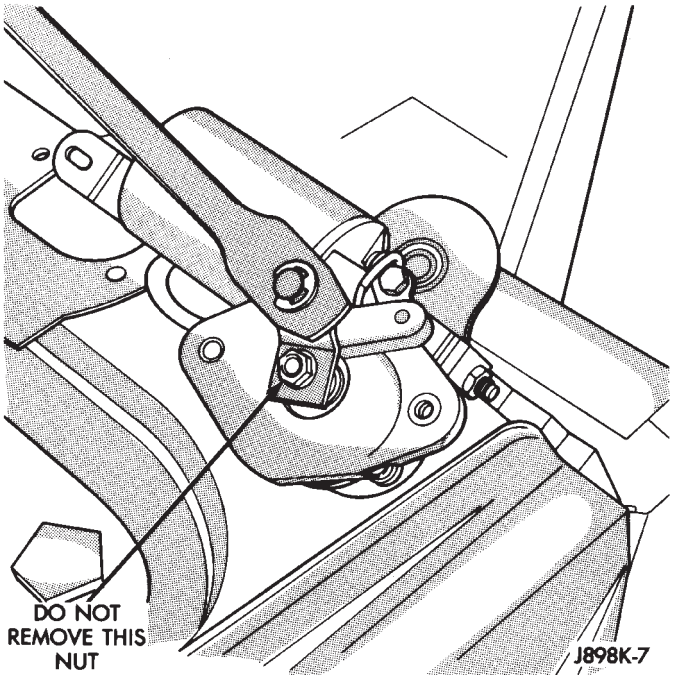

Fig. 10 Drive Link Remove

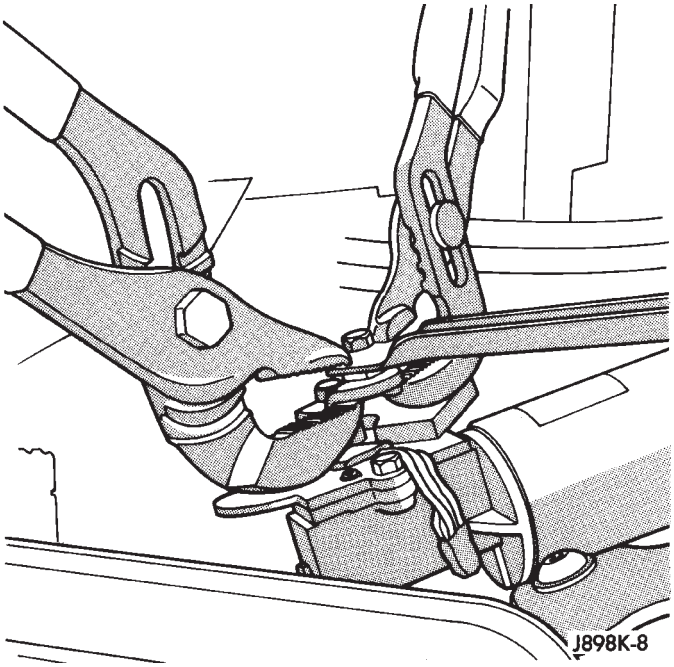

Fig. 11 Drive Link Install

(14) Install motor and drive link in windshield frame.

(15) Install weatherstrip screws.

(16) Connect wiper drive link to pivot shaft (Fig. 12).

(17) Install motor mounting screws. Tighten screws to 10.5 N·m (96 in. lbs.).

Be sure wire harness is not pinched or cut when windshield frame is rotated to upright position.

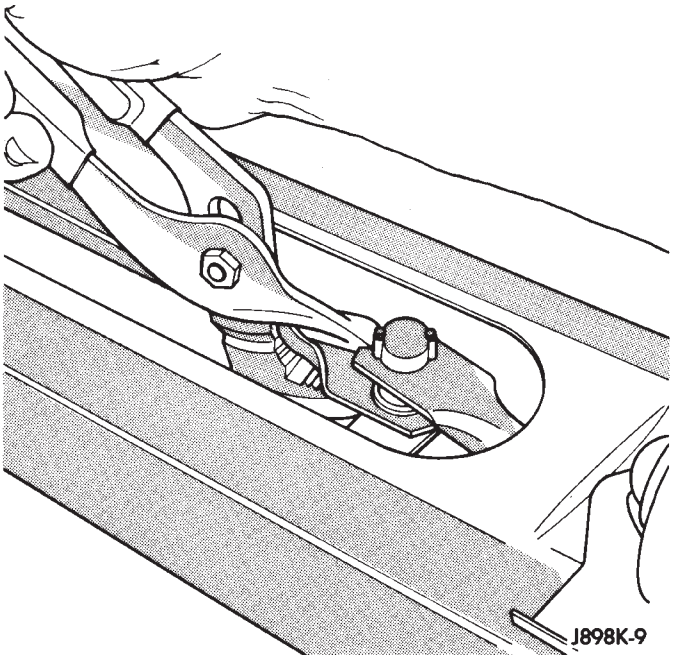

Fig. 12 Connect Drive Link To Pivot Shaft

(18) Raise windshield to upright position and install left and right windshield holddown bolts.

(19) Install nuts attaching pivots to windshield frame. Tighten nuts to 10 N·m (7.5 ft. lbs.).

(20) Turn wipers on to allow motor to cycle to park position.

(21) Install left and right wiper arms.

(22) Install necessary top components on windshield frame.

WINDSHIELD WIPER MOTOR REMOVE/INSTALL

(1) Remove the necessary hard or soft top components from the windshield frame.

(2) Remove the windshield holddown bolts in the lower corners of the instrument panel.

(3) Remove wiper motor mounting screws.

(4) Remove wiper motor harness retaining clip located on bottom of windshield.

(5) Disconnect the wiper drive link.

(6) Grasp the motor and pull the motor and drive link out of the access hole.

(7) Pry the drive link off the motor crank arm. DO NOT remove the crank arm attaching nut.

(8) Remove 2 screws holding intermittent wipe module bracket to bottom of instrument panel.

(9) Reach up behind instrument panel and disconnect wiper motor wiring harness.

(10) Remove wiper motor.

(11) Reverse removal procedures to install. Tighten motor mounting screws to 10.5 N·m (96 in. lbs.).

Be sure wire harness is not pinched or cut when windshield frame is rotated to upright position.

LIFTGATE WIPER MOTOR REMOVE/INSTALL

(1) Remove wiper arm from motor (see Liftgate Wiper Arm Remove/Install).
(2) Remove pivot shaft retaining nut.
(3) Remove motor trim cover (Fig. 13).

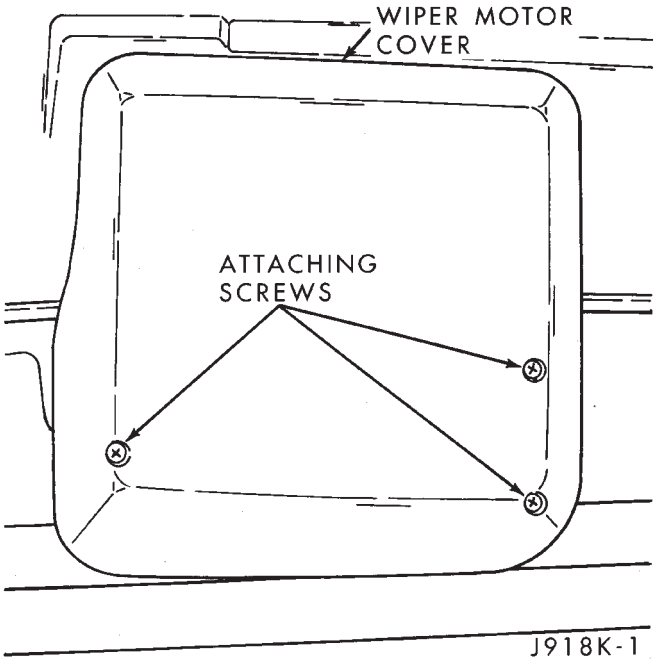

Fig. 13 Liftgate Wiper Motor Cover

(4) Disconnect electrical connector (Fig. 14).

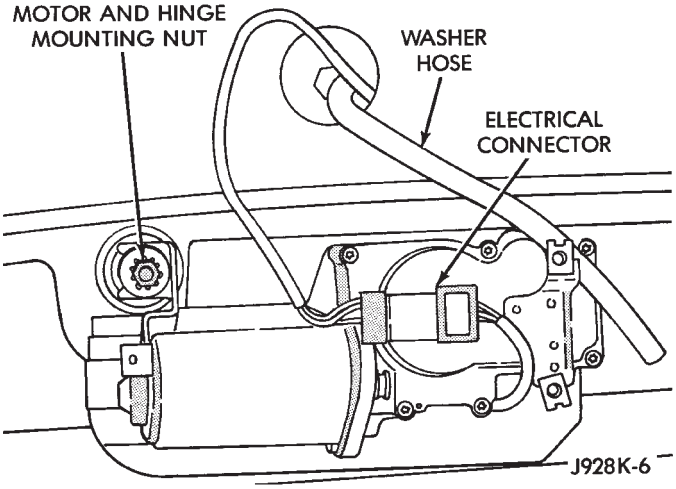

Fig. 14 Liftgate Wiper Motor

(5) Remove hinge nut holding motor to top.
(6) Reverse removal procedures to install.

WINDSHIELD WIPER/WASHER SWITCH REMOVE/INSTALL

(1) Disconnect negative cable from battery.
(2) Remove horn button with a push and turn motion.
(3) Remove horn button components (Fig. 15).

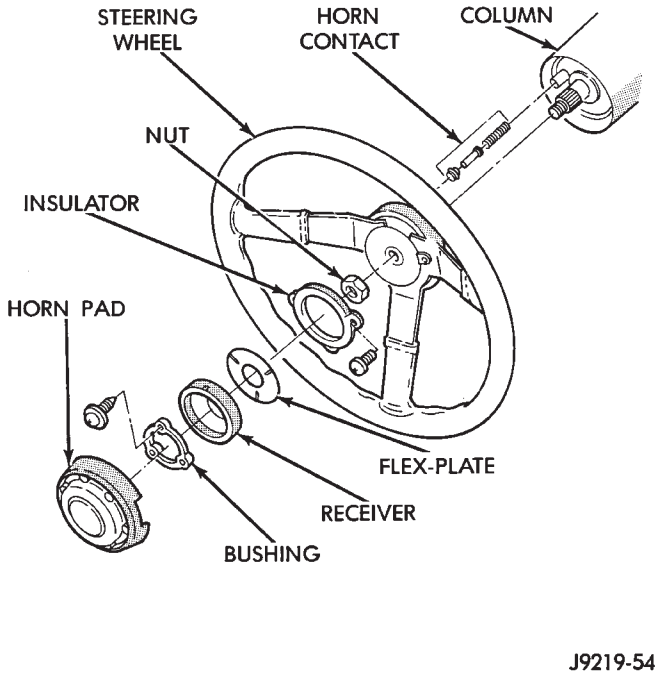

Fig. 15 Steering Wheel Remove/Install

(4) Turn ignition switch to the LOCK position and remove the steering wheel nut and washer.
(5) Scribe an alignment mark on the steering wheel in line with the mark already existing on the end of the steering column.
(6) Remove vibration damper from the steering column hub, if equipped.
(7) Remove steering wheel using a steering wheel puller. DO NOT hammer on puller or end of steering shaft.

WARNING: TO REMOVE THE STEERING SHAFT SNAP RING IN THE FOLLOWING STEP, THE LOCKPLATE MUST BE COMPRESSED. DO NOT ATTEMPT TO REMOVE THE LOCKPLATE WITHOUT COMPRESSOR TOOL C4156 AS THE LOCKPLATE IS UNDER HEAVY SPRING TENSION.

(8) Compress lockplate with compressor tool C4156.
(9) Remove steering shaft snap ring (Fig. 16). Discard snap ring. It is not reusable.
(10) Remove compressor tool.
(11) Remove lockplate, cancelling cam, and upper bearing preload spring.
(12) Remove horn button components from canceling cam.
(13) Remove screw and hazard warning switch knob.
(14) Remove dimmer switch actuator arm attaching screw (Fig. 17).
(15) Remove turn/hazard switch attaching screws.
(16) Remove 6 instrument bezel screws (Fig. 18).
(17) Slide bezel toward steering wheel.

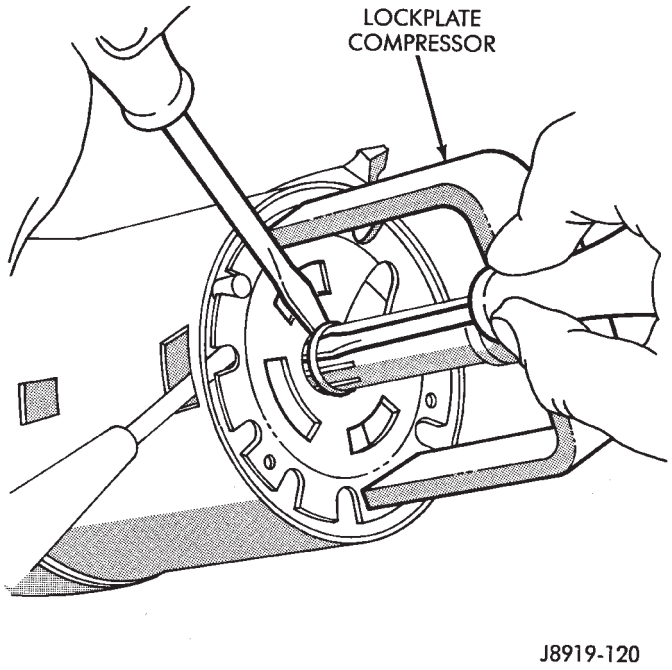

Fig. 16 Lockplate Remove

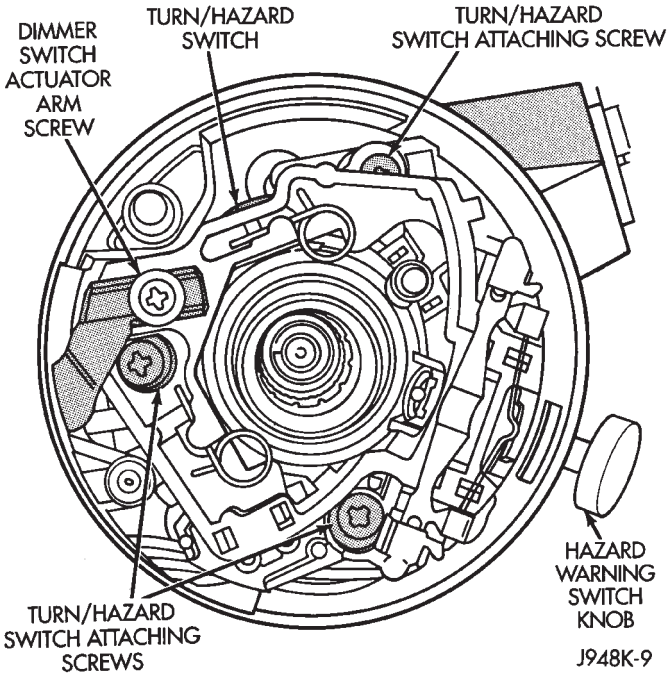

Fig. 17 Turn/Hazard Switch and Dimmer Actuating Arm

(18) Remove cover under column.

(19) If vehicle is equipped with a column shift, remove PRNDL cable clip (Fig. 19).

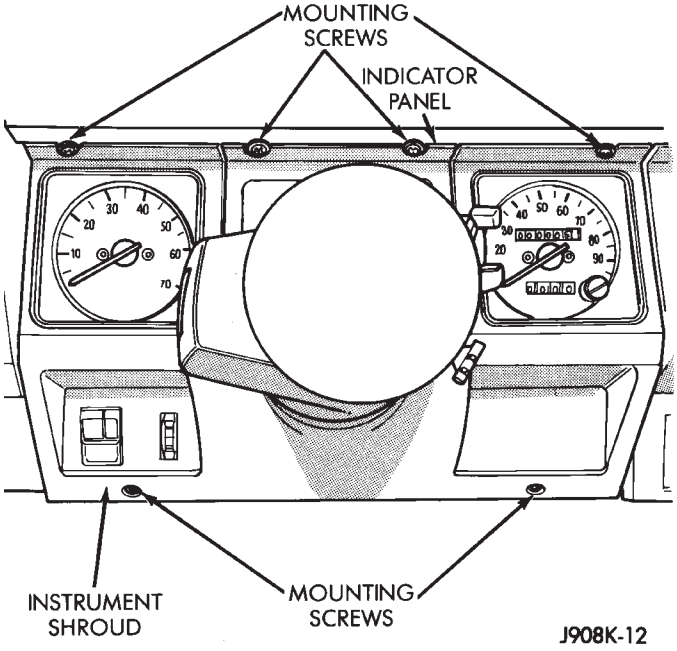

Fig. 18 Instrument Bezel Remove/Install

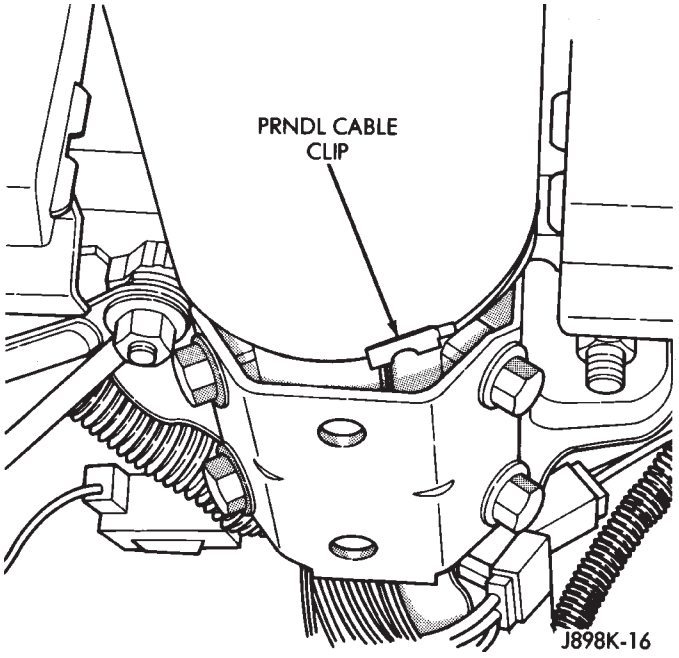

Fig. 19 PRNDL Cable Clip Remove/Install

(20) Remove 2 nuts holding steering column bracket to brake sled (Fig. 20).

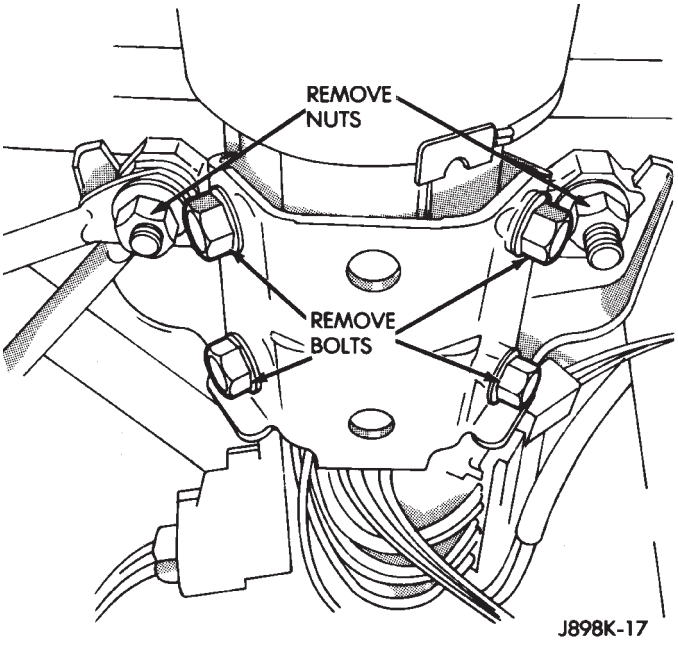

Fig. 20 Lower Steering Column Mounting

(21) Remove 4 bolts holding steering column brace to column.

(22) Loosen column brace mounting nut at drivers side kick panel. This will allow column to drop.

(23) Unplug wiper switch connector.

(24) Tape connector to wires (Fig. 21).

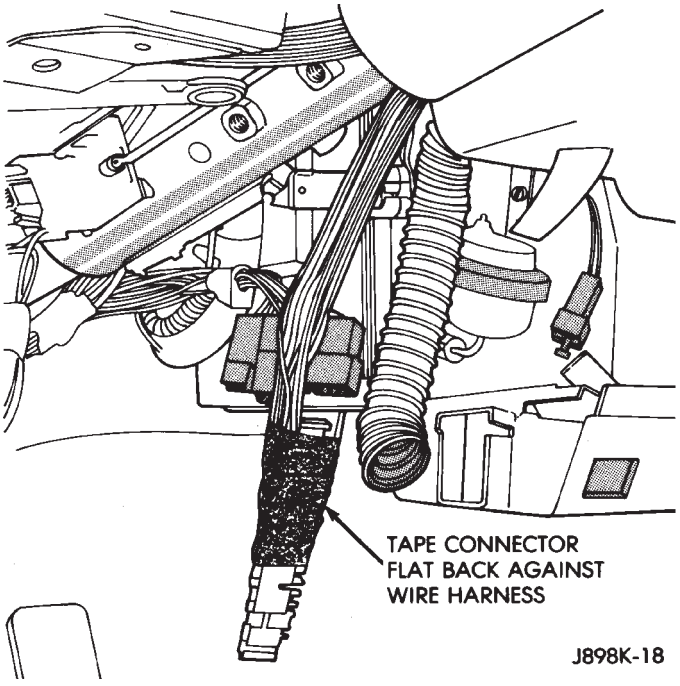

Fig. 21 Tape Wiper Switch Connector

(25) Push turn/hazard connector up and out of steering column connector (Fig. 22).

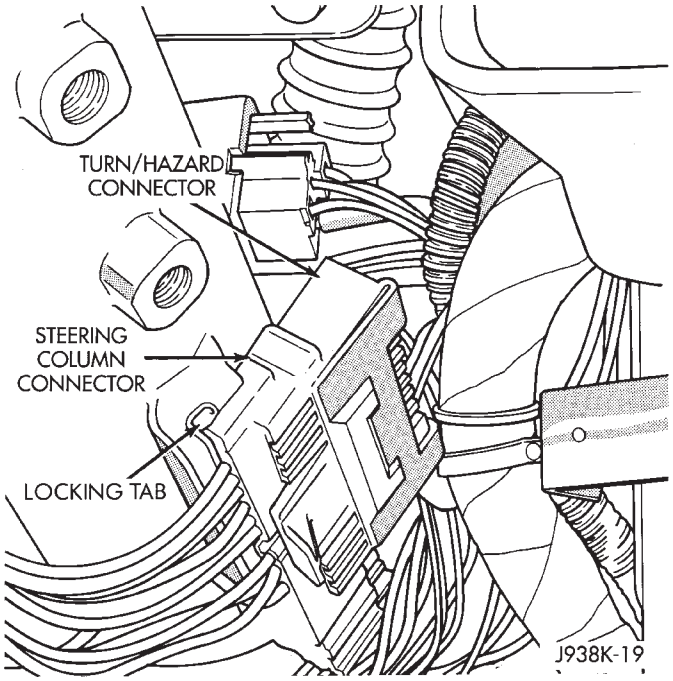

Fig. 22 Turn/Hazard Switch and Steering Column Connectors

(26) Pry up locking tabs of steering column connector and remove connector from column bracket.

(27) Remove plastic harness cover by pulling it up and over weld nuts then open and slide the cover off harness (Fig. 23).

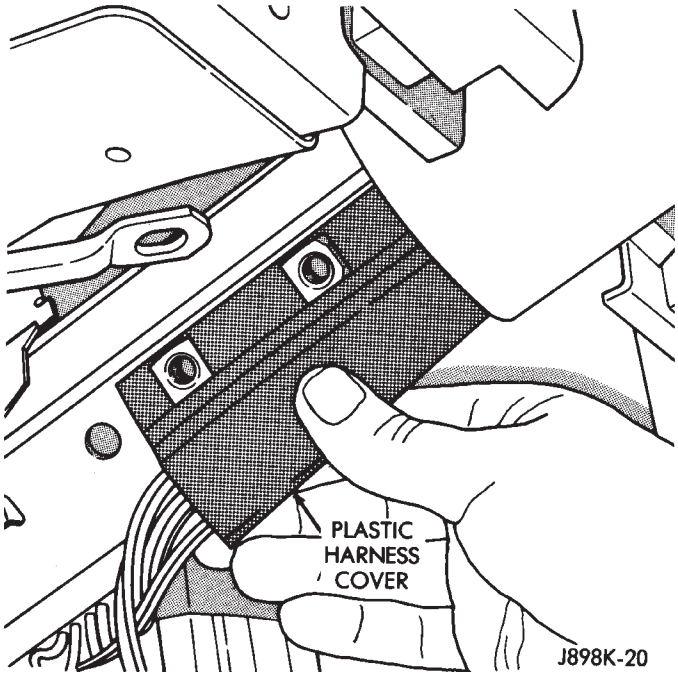

Fig. 23 Remove Plastic Harness Cover

(28) Pull turn/hazard switch out of column far enough to allow access to remaining screws.

(29) Insert ignition key in lock cylinder and turn ignition switch to ON position.

(30) Remove key warning buzzer switch and retaining clip with a paper clip inserted below retainer so that retainer is flattened (Fig. 24).

Do not attempt to remove buzzer switch and clip separately. The clip could fall into the column jacket.

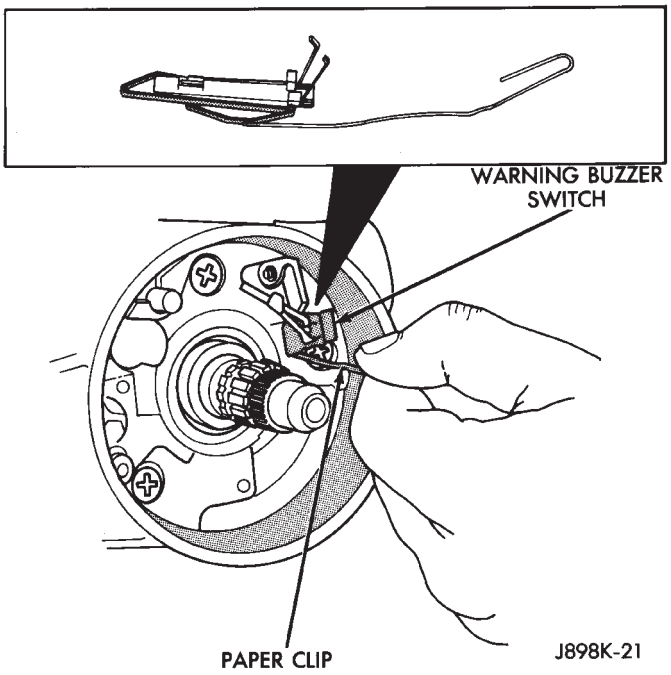

Fig. 24 Buzzer Switch Remove

(31) Remove ignition lock cylinder retaining screw and pull lock cylinder out of column housing (Fig. 25)

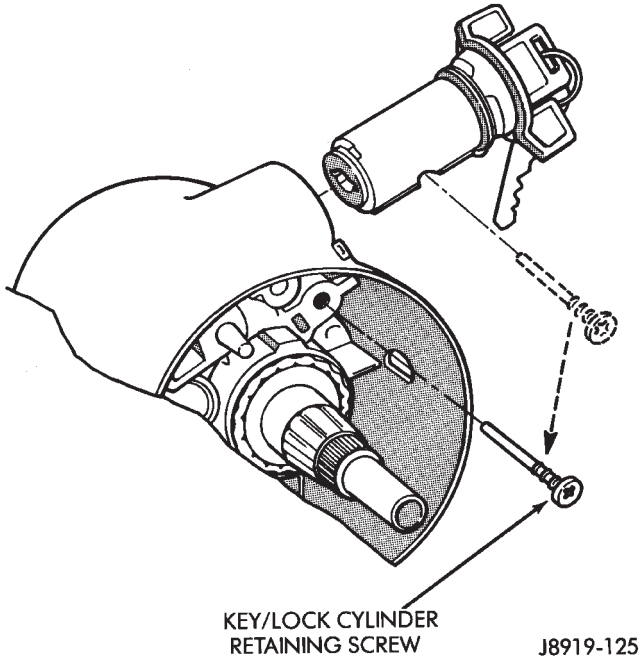

Fig. 25 Lock Cylinder Remove/Install

(32) Remove screws that attach housing and shroud assembly to column jacket and carefully remove housing and shroud assembly (Fig. 26).

DO NOT let dimmer switch rod, lock pin or lock rack fall out.

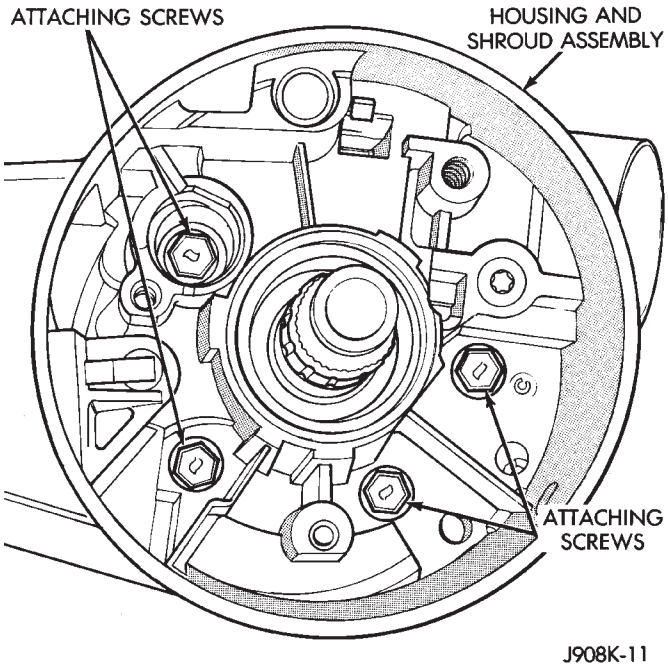

Fig. 26 Steering Column Housing Remove/Install

(33) Remove turn/hazard/wiper lever by pulling it straight out of column.

(34) Remove wiper switch cover from back of housing and shroud assembly (Fig. 27). If equipped with column shift, remove screw holding the cover on.

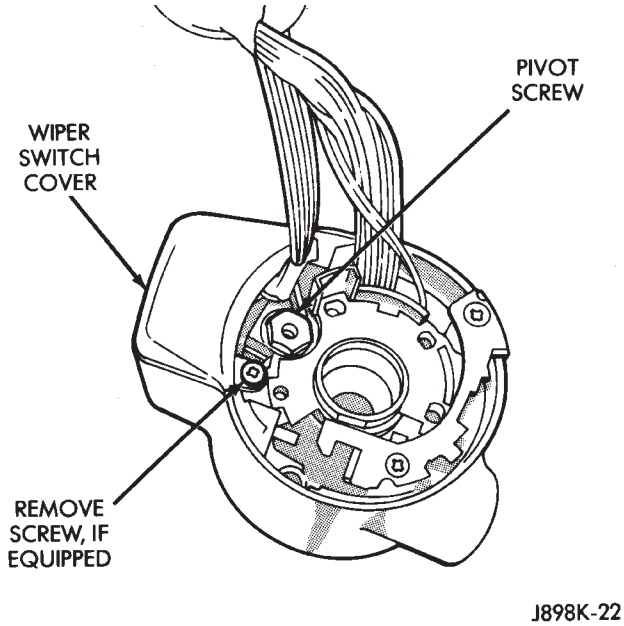

Fig. 27 Remove Pivot Screw

(35) Remove pivot screw from housing and remove wiper switch.

(36) Install a new switch and switch cover.

(37) Push on dimmer switch rod to make sure it is connected then carefully position housing and shroud assembly to column (Fig. 28).

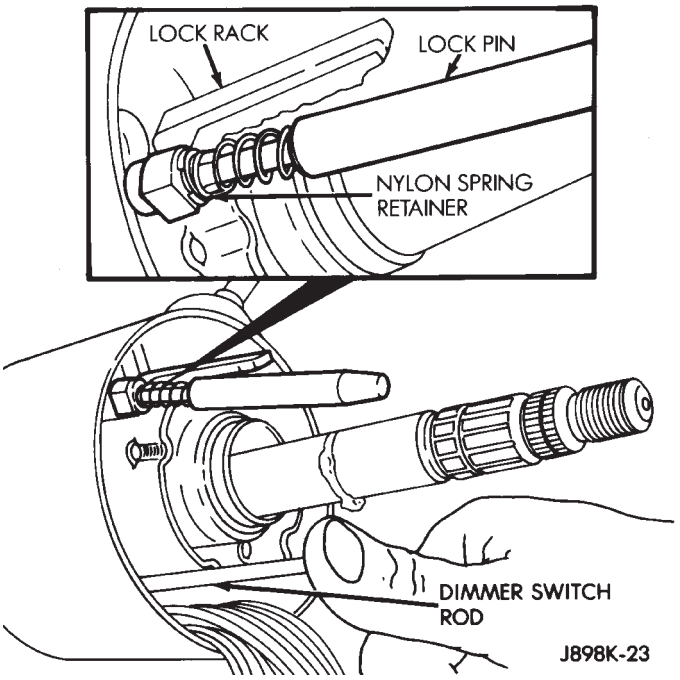

Fig. 28 Check Dimmer Switch Rod and Lock Pin

Make sure nylon spring retainer on lock pin is positioned forward of the retaining slot of lock rack.

Position first tooth of gear (farthest from the block tooth) with the most forward tooth of lock rack.

(38) Install screws that attach housing and shroud assembly to column jacket and carefully mate housing and shroud assembly.

(39) Insert key and lock cylinder and test that lock pin extends fully when key is moved to lock position.

(40) Reverse removal procedures to complete installation.

CAUTION: When installing a wiper switch, make sure wires are laying flat on bottom inside of column.

On vehicles equipped with column shift, install PRNDL cable clip with shift indicator on N (neutral). Move selector through the range and make sure it lines up with each letter.

(41) Install steering wheel. Tighten steering wheel nut to 34 N·m (25 ft. lbs.) torque.

LIFTGATE WIPER/WASHER SWITCH REMOVE/INSTALL

(1) Remove the left instrument panel bezel. Refer to Group 8E - Instrument Panel and Gauges for procedure.

(2) Remove the switch housing panel.

(3) Unplug the switch connector. Slightly depress the switch mounting tabs and remove the switch (Fig. 29).

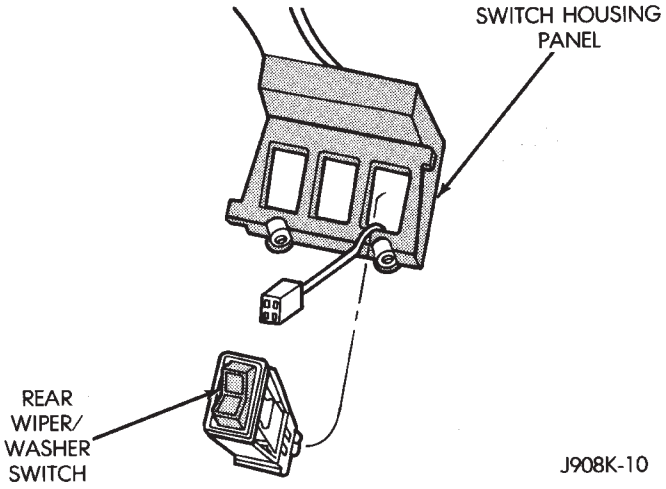

Fig. 29 Liftgate Wiper/Washer Switch

WASHER PUMP REMOVE/INSTALL

(1) Remove 3 washer reservoir mounting screws (Fig. 30 or 31).

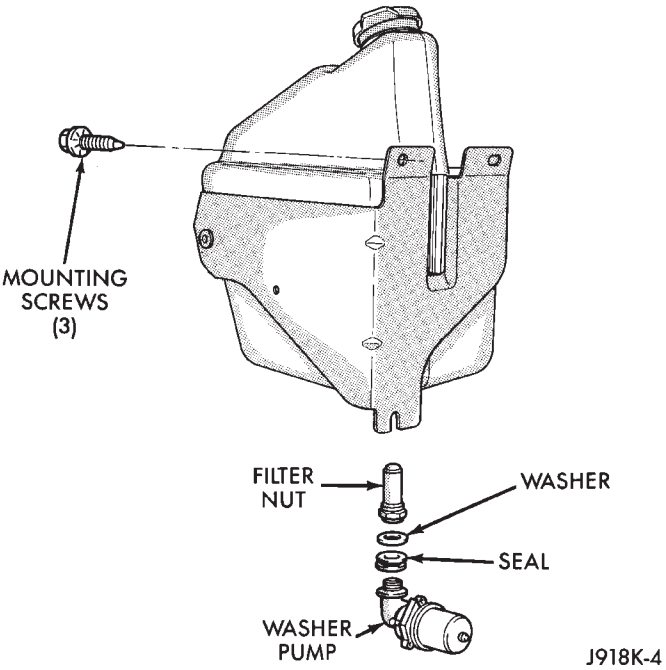

Fig. 30 Washer Reservoir and Pump

(2) Disconnect hose(s) from pump(s).

(3) Drain washer reservoir.

(4) Using a deep socket, remove filter nut from bottom inside reservoir and remove pump.

(5) Reverse removal procedures to install.

LIFTGATE WASHER NOZZLE REMOVE/INSTALL

(1) From inside the vehicle remove the motor trim cover.

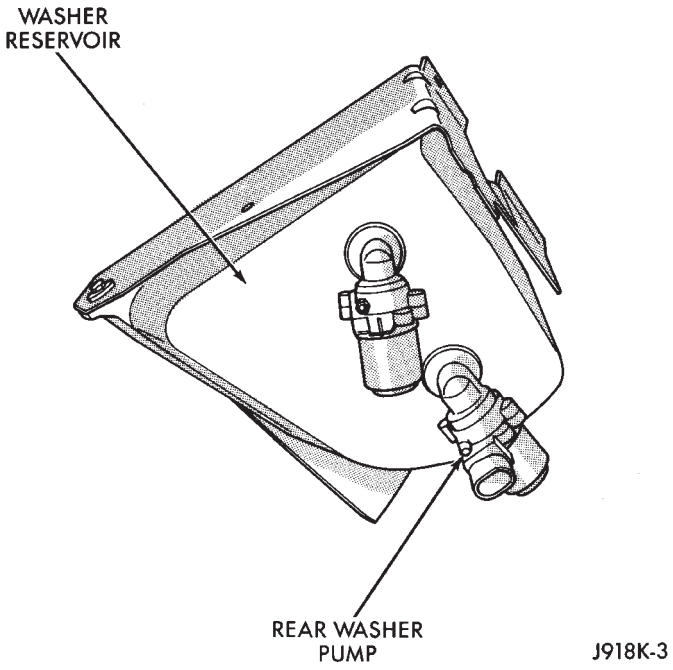

Fig. 31 Liftgate Washer Pump

(2) Remove the washer hose from the back of the washer nozzle.

(3) Remove the nut holding the nozzle to the glass.
(4) Install the new washer nozzle.

LAMPS

CONTENTS

	page		page
BULB APPLICATION—XJ VEHICLES	18	INTERIOR LAMPS	16
GENERAL INFORMATION	1	SERVICE PROCEDURES	6

GENERAL INFORMATION

Each vehicle is equipped with various lamp assemblies. A good ground is necessary for proper lighting operation. Grounding is provided by the lamp socket when it comes in contact with the metal body, or through a separate ground wire.

When changing lamp bulbs check the socket for corrosion. If corrosion is present, clean it with a wire brush and coat the inside of the socket lightly with Mopar Multi-Purpose Grease or equivalent.

DIAGNOSTIC PROCEDURES—XJ

When a vehicle experiences problems with the headlamp system, verify the condition of the battery connections, charging system, headlamp bulbs, wire connectors, relay, high beam dimmer switch and headlamp switch. Refer to Group 8W, Wiring Diagrams for component locations and circuit information.

Always begin any diagnosis by testing all of the fuses and circuit breakers in the system. Refer to Group 8W, Wiring Diagrams.

HEADLAMP DIAGNOSIS

CONDITION	POSSIBLE CAUSES	CORRECTION
HEADLAMPS ARE DIM WITH ENGINE IDLING OR IGNITION TURNED OFF.	1. Loose or corroded battery cables. 2. Loose or worn generator drive belt. 3. Charging system output too low. 4. Battery has insufficient charge. 5. Battery is sulfated or shorted. 6. Poor lighting circuit Z1-ground. 7. Both headlamp bulbs defective.	1. Clean and secure battery cable clamps and posts. 2. Adjust or replace generator drive belt. 3. Test and repair charging system, refer to Group 8A. 4. Test battery state-of-charge, refer to Group 8A. 5. Load test battery, refer to Group 8A. 6. Test for voltage drop across Z1-ground locations, refer to Group 8W. 7. Replace both headlamp bulbs.
HEADLAMP BULBS BURN OUT FREQUENTLY.	1. Charging system output too high. 2. Loose or corroded terminals or splices in circuit.	1. Test and repair charging system, refer to Group 8A. 2. Inspect and repair all connectors and splices, refer to Group 8W.
HEADLAMPS ARE DIM WITH ENGINE RUNNING ABOVE IDLE.*	1. Charging system output too low. 2. Poor headlamp circuit ground. 3. High resistance in headlamp circuit. 4. Both headlamp bulbs defective.	1. Test and repair charging system, refer to Group 8A. 2. Test voltage drop across Z1-ground, refer to Group 8W. 3. Test amperage draw of headlamp circuit. 4. Replace both headlamp bulbs.
HEADLAMPS FLASH RANDOMLY.	1. Poor headlamp circuit ground. 2. High resistance in headlamp circuit. 3. Faulty headlamp switch circuit breaker. 4. Loose or corroded terminals or splices in circuit.	1. Repair circuit ground, refer to Group 8W. 2. Test amperage draw of headlamp circuit. 3. Replace headlamp switch. 4. Repair connector terminals or splices, refer to Group 8W.
HEADLAMPS DO NOT ILLUMINATE.	1. No voltage to headlamps. 2. No ground at headlamps. 3. Faulty headlamp switch. 4. Faulty headlamp dimmer switch. 5. Broken connector terminal or wire splice in headlamp circuit.	1. Replace fuse, refer to group 8W. 2. Repair circuit ground, refer to Group 8W. 3. Replace headlamp switch. 4. Replace headlamp dimmer switch. 5. Repair connector terminal or wire splices.
* Canada vehicles must have lamps ON.		

FOG LAMP DIAGNOSIS

CONDITION	POSSIBLE CAUSES	CORRECTION
FOG LAMPS ARE DIM WITH ENGINE IDLING OR IGNITION TURNED OFF.	1. Loose or corroded battery cables. 2. Loose or worn generator drive belt. 3. Charging system output too low. 4. Battery has insufficient charge. 5. Battery is sulfated or shorted. 6. Poor lighting circuit Z1-ground. 7. Both fog lamp bulbs defective.	1. Clean and secure battery cable clamps and posts. 2. Adjust or replace generator drive belt. 3. Test and repair charging system, refer to Group 8A. 4. Test battery state-of-charge, refer to Group 8A. 5. Load test battery, refer to Group 8A. 6. Test for voltage drop across Z1-ground locations, refer to Group 8W. 7. Replace both lamp bulbs.
FOG LAMP BULBS BURN OUT FREQUENTLY.	1. Charging system output too high. 2. Loose or corroded terminals or splices in circuit.	1. Test and repair charging system, refer to Group 8A. 2. Inspect and repair all connectors and splices, refer to Group 8W.
FOG LAMPS ARE DIM WITH ENGINE RUNNING ABOVE IDLE.	1. Charging system output too low. 2. Poor fog lamp circuit ground. 3. High resistance in fog lamp circuit. 4. Both fog lamp bulbs defective.	1. Test and repair charging system, refer to Group 8A. 2. Test voltage drop across Z1-ground, refer to Group 8W. 3. Test amperage draw of fog lamp circuit. 4. Replace both fog lamp bulbs.
FOG LAMPS FLASH RANDOMLY.	1. Poor fog lamp circuit ground. 2. High resistance in fog lamp circuit. 3. Faulty fog lamp switch circuit breaker. 4. Loose or corroded terminals or splices in circuit.	1. Repair circuit ground, refer to Group 8W. 2. Test amperage draw of fog lamp circuit. 3. Replace fog lamp switch. 4. Repair connector terminals or splices, refer to Group 8W.
FOG LAMPS DO NOT ILLUMINATE.	1. Blown fuse for fog lamps. 2. No ground at fog lamps. 3. Faulty fog lamp switch. 4. Broken connector terminal or wire splice in fog lamp circuit.	1. Replace fuse, refer to group 8W. 2. Repair circuit ground, refer to Group 8W. 3. Replace fog lamp switch. 4. Repair connector terminal or wire splices.

MULTI-FUNCTION SWITCH TESTING PROCEDURES—XJ

The multi-function switch contains electrical circuitry for:

- Headlamp Dimmer Switch.
- Passing Lights.
- Turn Signals.
- Hazard Warning.
- Windshield Wiper.
- Pulse Wiper.
- Windshield Washer.

This integrated switch is mounted to the left hand side of the steering column. Should any function of the switch fail, the entire switch must be replaced.

The multi-function switch also serves as a fog lamp lock-out circuit. The circuit to the fog lamp switch is completed only when the dimmer switch is in the low beam position.

SWITCH TEST

(1) Disconnect battery negative cable.

(2) Remove lower instrument panel screws along bottom edge of steering column (Fig. 1).

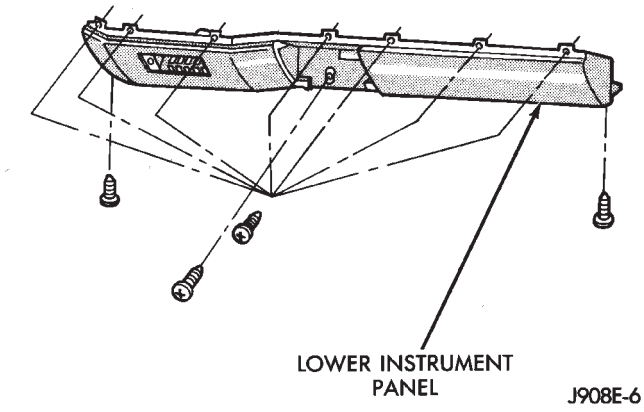

Fig. 1 Lower Instrument Panel/Knee Blocker—XJ Vehicles

(3) Remove lower instrument panel/knee blocker.

(4) Remove tilt lever.

(5) Remove upper and lower column shrouds to gain access to the switch connector (Fig. 2).

(6) Remove lower fixed column shroud.

(7) Loosen steering column upper bracket nuts. Do not remove nuts.

(8) Move upper fixed column shroud to gain access to rear of multi-function switch.

(9) Remove switch connector (Fig. 3 and 4).

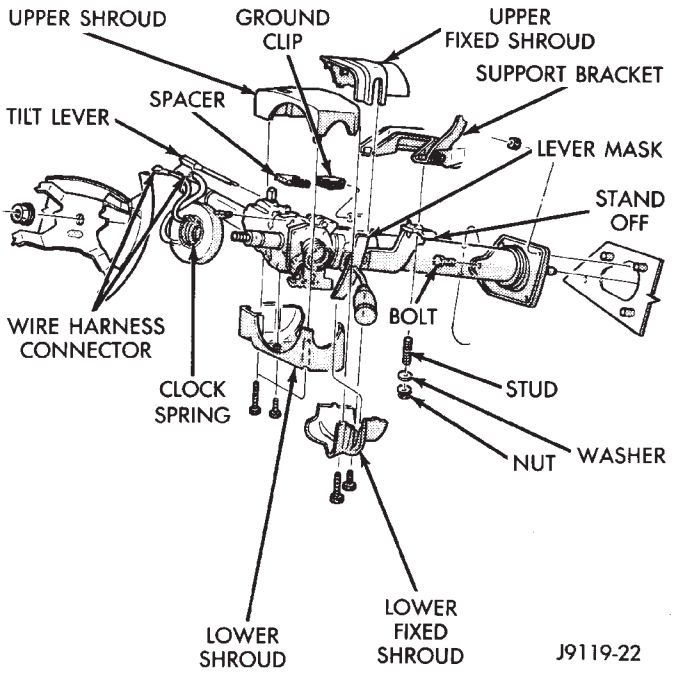

Fig. 2 Steering Column Shrouds

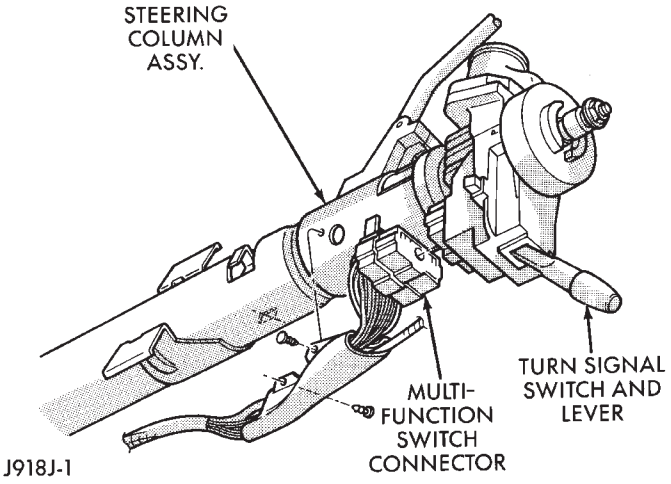

Fig. 3 Multi-function Switch Connector

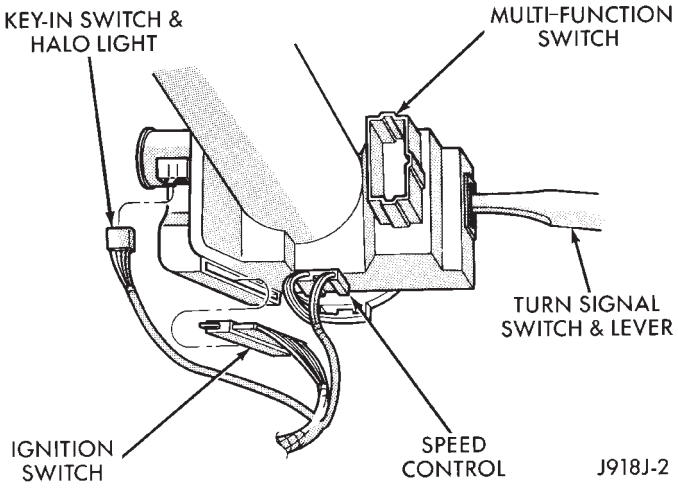

Fig. 4 Steering Column Connectors

(10) Use an ohmmeter to test for continuity between the terminals of the switch as shown in the continuity chart (Fig. 5).

(11) Refer to Service Procedures for assembly.

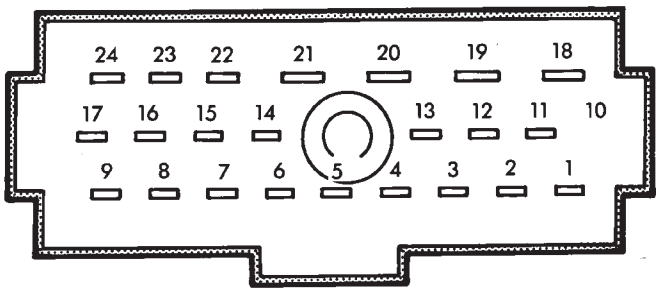

VIEW FROM TERMINAL SIDE

SWITCH POSITION	CONTINUITY BETWEEN
LOW BEAM	18 AND 19
HIGH BEAM	19 AND 20
OPTICAL HORN	20 AND 21

908J-5

Fig. 5 Dimmer Switch Continuity Chart

SERVICE PROCEDURES

INDEX

page

Back-Up/Rear Turn Signal/Tail Lamp Bulb Replacement—XJ 12
Center High Mounted Stop Lamp (CHMSL)—XJ . . 12
Daytime Running Lights (Canada Only)—XJ 15
Drl Module Replacement—XJ 15
Fog Lamp Replacement—XJ 9
Fog Lamp Switch Replacement—XJ 10
Fog Lamps—XJ 7
Front Park/Turn Signal Lamp Bulb Replacement—XJ 9
Headlamp Alignment Preparation—XJ 6
Headlamp Alignment—XJ 6
Headlamp Bulb Replacement—XJ 7

page

Headlamp Delay Function Trouble Diagnosis—XJ . 14
Headlamp Delay Module Replacement—XJ 14
Headlamp Switch—XJ 10
Headlamp/Fog Lamp Adjustment Using Alignment Screen—XJ 7
License Plate Lamp—XJ 12
Multi-Function Switch Service Procedures—XJ 11
Sentinel Headlamp Delay Module—XJ 14
Side Marker Lamp Bulb Replacement—XJ 10
Underhood Lamp Bulb Replacement—XJ 13
Underhood Lamp Replacement—XJ 13
Underhood Lamp Service Information—XJ 12

HEADLAMP ALIGNMENT—XJ

Headlamps can be aligned using the screen method provided in this section. Alignment Tool C4466-A or equivalent can also be used. Refer to instructions provided with the tool for proper procedures. **The preferred headlamp alignment setting is 0 for the left/right adjustment and 1″ down for the up/down adjustment.**

HEADLAMP ALIGNMENT PREPARATION—XJ

(1) Verify headlamp dimmer switch and high beam indicator operation.

(2) Correct defective components that could hinder proper headlamp alignment.

(3) Verify proper tire inflation.

(4) Clean headlamp lenses.

(5) Verify that luggage area is not heavily loaded.

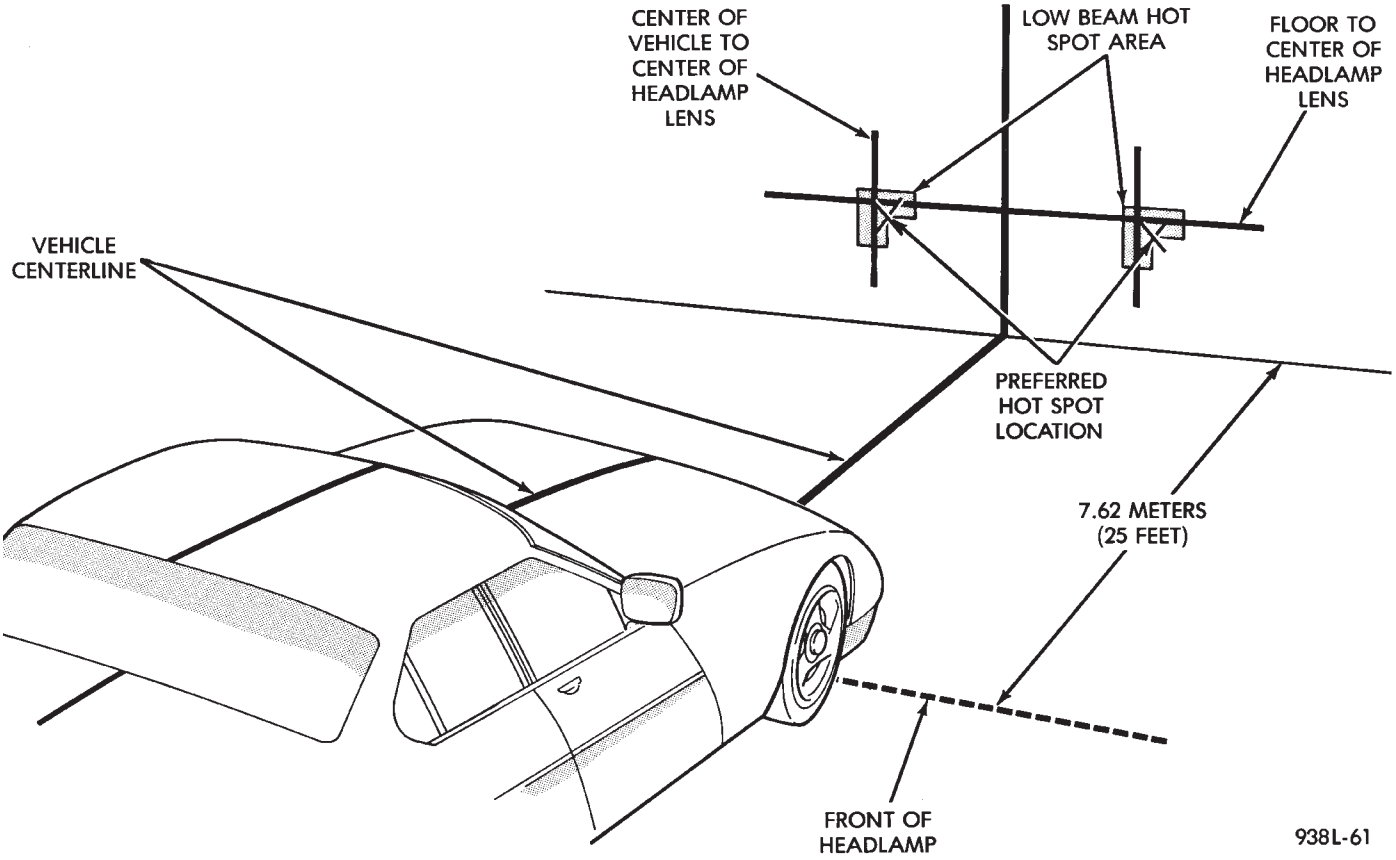

Fig. 1 Headlamp Alignment Screen—Typical

(6) Fuel tank should be FULL. Add 2.94 kg (6.5 lbs.) of weight over the fuel tank for each estimated gallon of missing fuel.

HEADLAMP/FOG LAMP ADJUSTMENT USING ALIGNMENT SCREEN—XJ

ALIGNMENT SCREEN PREPARATION

(1) Position vehicle on a level surface perpendicular to a flat wall 7.62 meters (25 ft) away from front of headlamp lens (Fig. 1).

(2) If necessary, tape a line on the floor 7.62 meters (25 ft) away from and parallel to the wall.

(3) Measure from the floor up 1.27 meters (5 ft) and tape a line on the wall at the centerline of the vehicle. Sight along the centerline of the vehicle (from rear of vehicle forward) to verify accuracy of the line placement.

(4) Rock vehicle side-to-side three times to allow suspension to stabilize.

(5) Jounce front suspension three times by pushing downward on front bumper and releasing.

(6) Measure the distance from the center of headlamp lens to the floor. Transfer measurement to the alignment screen (with tape). Use this line for up/down adjustment reference.

(7) Measure distance from the centerline of the vehicle to the center of each headlamp being aligned. Transfer measurements to screen (with tape) to each side of vehicle centerline. Use these lines for left/right adjustment reference.

ADJUSTMENT

(1) Remove screws and both headlamp bezels.

(2) Clean front of the headlamps.

(3) Place headlamps on LOW beam.

(4) Cover front of the headlamp that is not being adjusted.

(5) Turn vertical adjustment screw (Fig. 2) until the headlamp beam pattern on screen/wall is similar to the pattern depicted in Figure 1.

When using a headlamp aiming screen:

- Adjust the headlamps so that the beam horizontal position is at 0.
- Adjust the beam vertical position is 25 mm (1 in) downward from the lamp horizontal centerline.

(6) Rotate the horizontal adjustment screw until the headlamp beam pattern on the aiming screen/wall similar to the pattern in Figure 1.

(7) Cover front of the headlamp that has been adjusted and adjust the other headlamp beam as instructed above.

(8) Install headlamp bezels. Tighten the screws securely.

FOG LAMP ADJUSTMENT

Prepare an alignment screen. Refer to Alignment Screen Preparation paragraph in this section. A properly aligned fog lamp will project a pattern on the alignment screen 100 mm (4 in.) below the fog lamp centerline and straight ahead (Fig. 3)

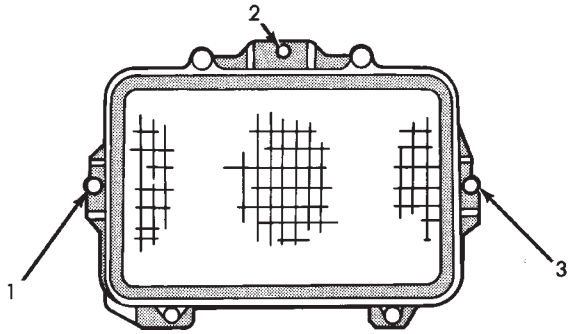

1. HORIZONTAL ADJ. SCREW - RH
2. VERTICAL ADJ. SCREW
3. HORIZONTAL ADJ. SCREW - LH

J908L-24

Fig. 2 Headlamp Beam Adjustment Screws

HEADLAMP BULB REPLACEMENT—XJ

REMOVAL

(1) Remove the screws and the headlamp bezel (Fig. 4).

(2) Remove the screws and headlamp bulb retaining ring.

(3) Disconnect the headlamp bulb wire harness connector and remove the bulb from the bucket.

INSTALLATION

(1) Position the bulb in the bucket and connect the wire harness connector.

(2) Position retaining ring on the headlamp bulb and install screws.

(3) Install the headlamp bezel. Tighten the screws securely.

FOG LAMPS—XJ

Fog lamps are turned OFF by the circuit relay when the high beam driving lamps are turned ON.

Fog lamps may be operated ONLY when low beam headlamps are ON. If the headlamps are switched to high beam, the low beam lamps and fog lamps will turn OFF. The fog lamps will go back on when the high beams are switched OFF.

The indicator lamp on the fog lamp switch will go:

- OFF when the high beams lamps are switched ON.
- ON when the high beam lamps are switched OFF.

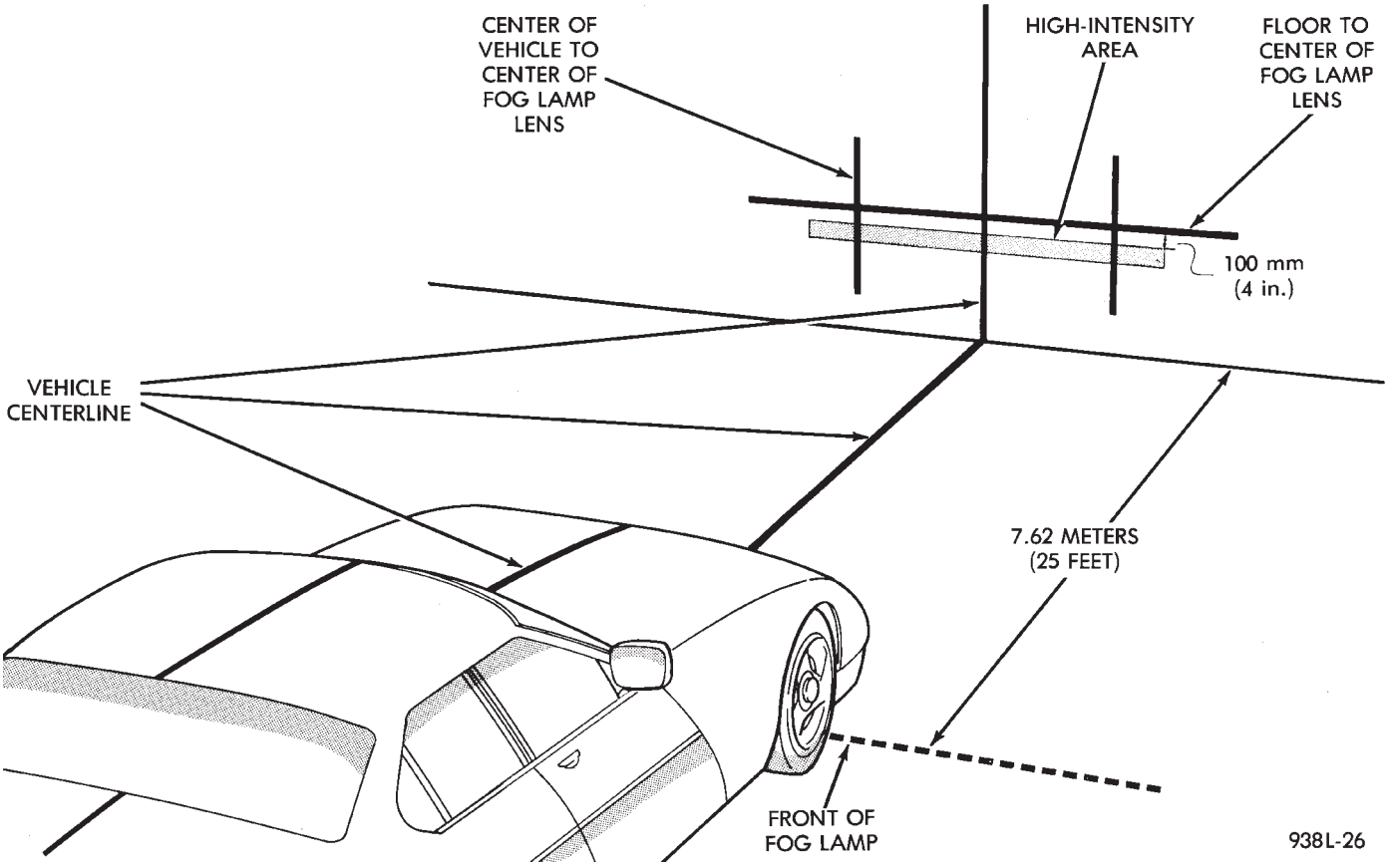

Fig. 3 Fog Lamp Alignment —Typical

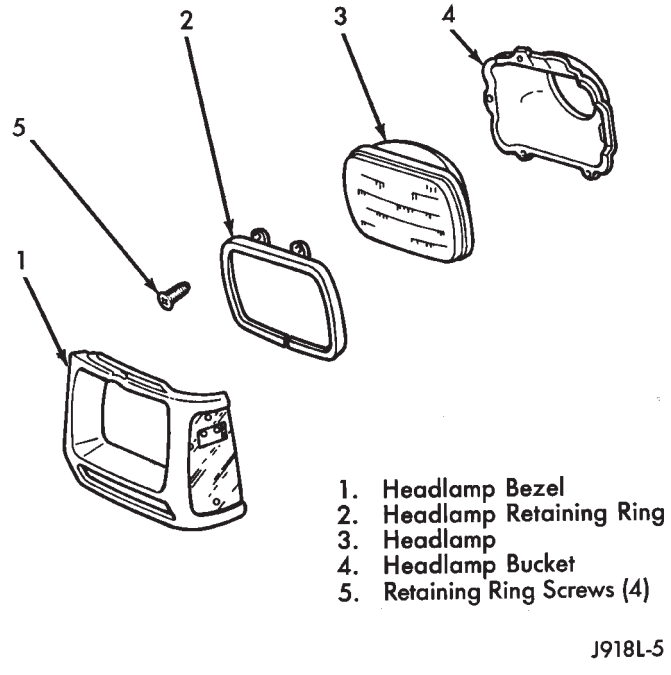

Fig. 4 Headlamp Components

FOG LAMP BULB REPLACEMENT

CAUTION: Do not touch the bulb glass with fingers or other oily surfaces. Reduced bulb life will result.

(1) Remove the screws attaching the bezel to the lamp body (Fig. 5). Remove the bezel from the lamp body.

(2) Remove the lens and reflector from the lamp body.

(3) Remove the bulb holder from the lens and reflector.

(4) Remove the lamp element from the bulb holder.

(5) To install, reverse the removal procedure.

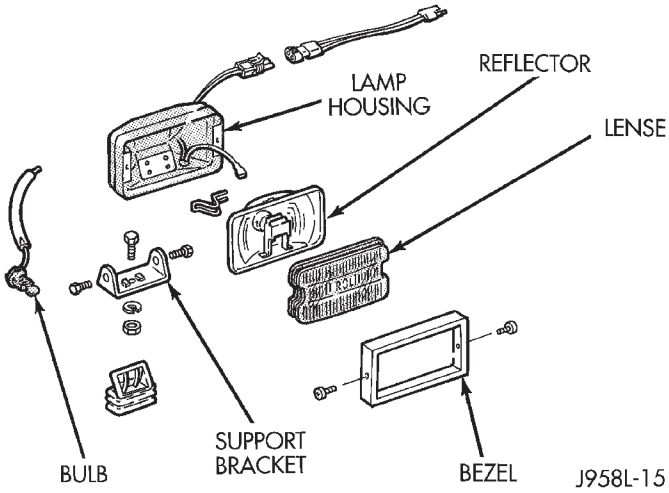

Fig. 5 Fog Lamp Components

FOG LAMP REPLACEMENT—XJ

REMOVAL

(1) Disconnect the fog lamp wire harness connector (Fig. 6).

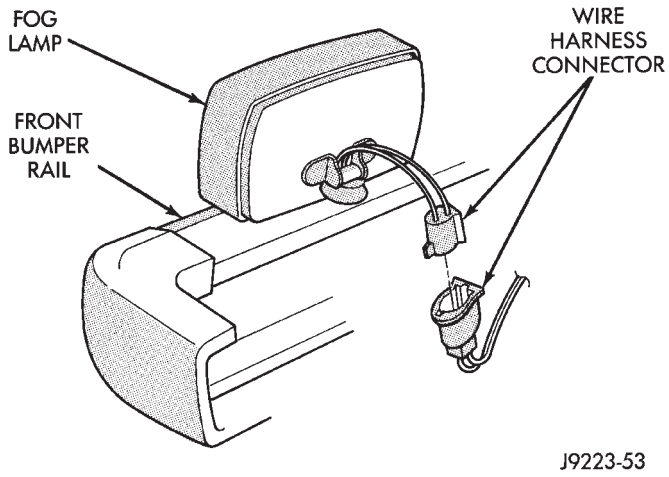

Fig. 6 Fog Lamp Wire Harness Connector—XJ Vehicles

(2) Remove the retaining nut and washer from each side of the support bracket and remove the fog lamp from the support bracket (Fig. 7).

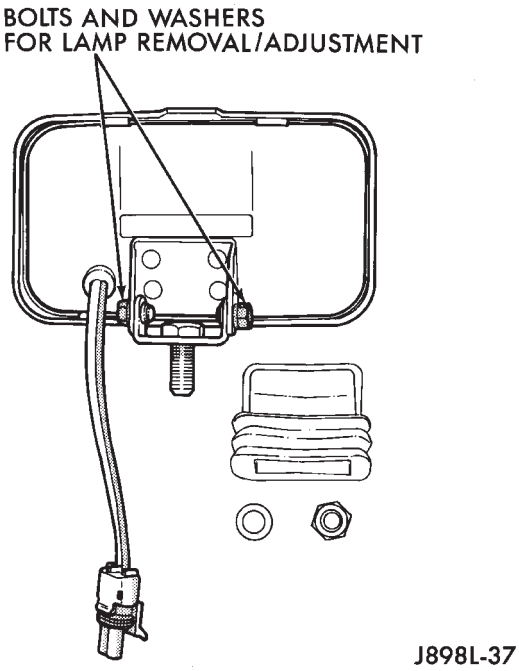

Fig. 7 Fog Lamp

INSTALLATION

(1) Position the fog lamp in the support bracket and install the washer and nut at each side of the bracket. Tighten the nuts securely.

(2) Connect the fog lamp wire harness connector.

FRONT PARK/TURN SIGNAL LAMP BULB REPLACEMENT—XJ

REMOVAL

(1) Remove the headlamp bezel screw and the side marker lamp lens/housing screw (Fig. 8).

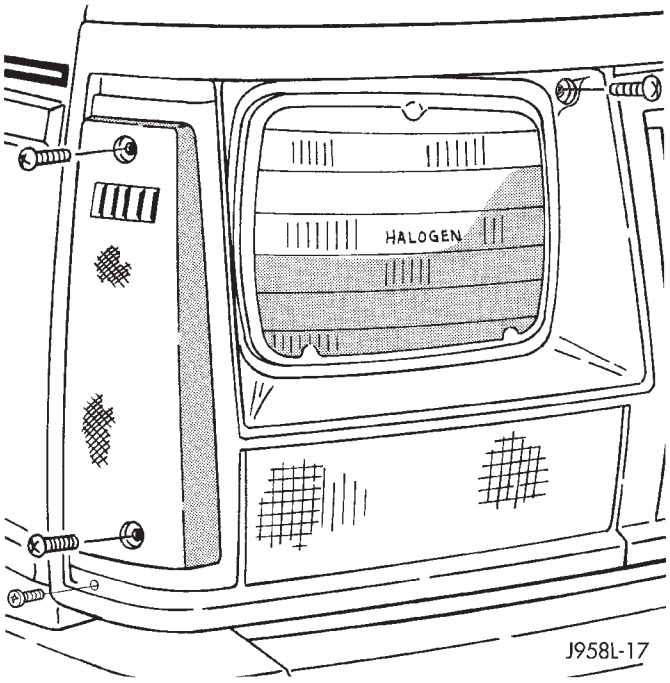

Fig. 8 Headlamp Bezel & Side Marker Lamp

(2) Separate the side marker lamp from the headlamp bezel and remove the screws from the headlamp bezel (Fig. 9).

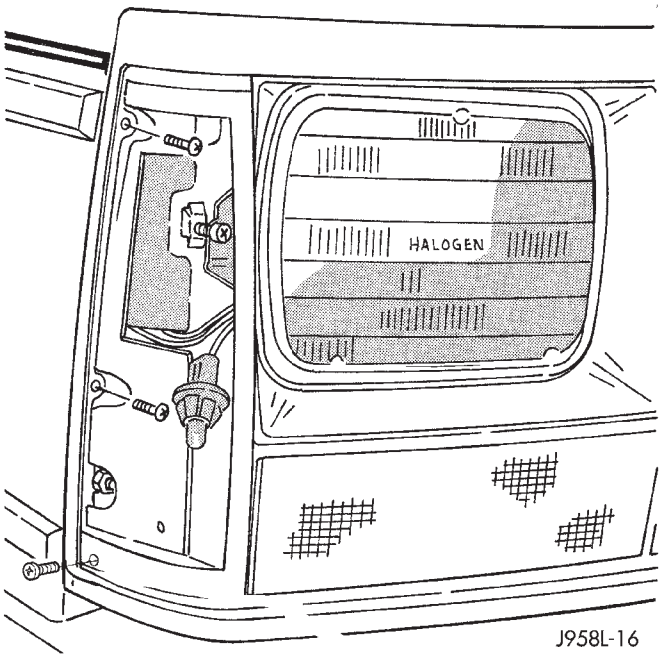

Fig. 9 Headlamp Bezel Removal/Installation

(3) Remove screws from the park/turn signal lamp housing (Fig. 10).

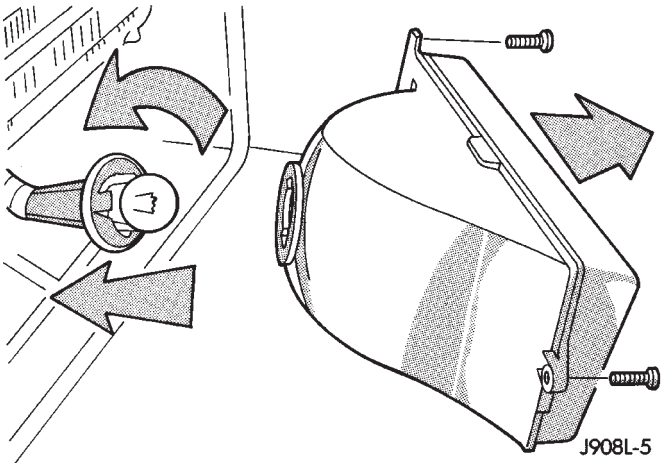

Fig. 10 Park/Turn Signal Lamp Housing Removal

(4) Separate the lamp housing from the headlamp bezel.

(5) Rotate the bulb socket one-third turn and remove it from the lamp housing.

(6) Remove bulb from socket.

INSTALLATION

(1) Install a replacement bulb in the socket.

(2) Install bulb and socket in the lamp housing.

(3) Position the park/turn signal lamp housing on the headlamp bezel.

(4) Install lamp housing screws. Tighten the screws.

(5) Install the outer screws in the headlamp bezel. Tighten the screws.

(6) Position the side marker lamp lens/housing on the headlamp bezel.

(7) Install side marker lamp lens/housing screws and headlamp bezel (Fig. 8). Tighten the screws.

SIDE MARKER LAMP BULB REPLACEMENT—XJ

REMOVAL

(1) Remove the screws from the side marker lamp lens and housing. Separate lens and housing from the headlamp bezel (Fig. 11).

(2) Remove the bulb and socket from the back side of the lamp housing.

(3) Remove bulb from socket.

INSTALLATION

(1) Install a replacement bulb in the socket.

(2) Install bulb and socket in the back of side marker lamp housing.

(3) Position the side marker lens and housing on the headlamp bezel (Fig. 11).

(4) Install the side marker lamp screws. Tighten the screws.

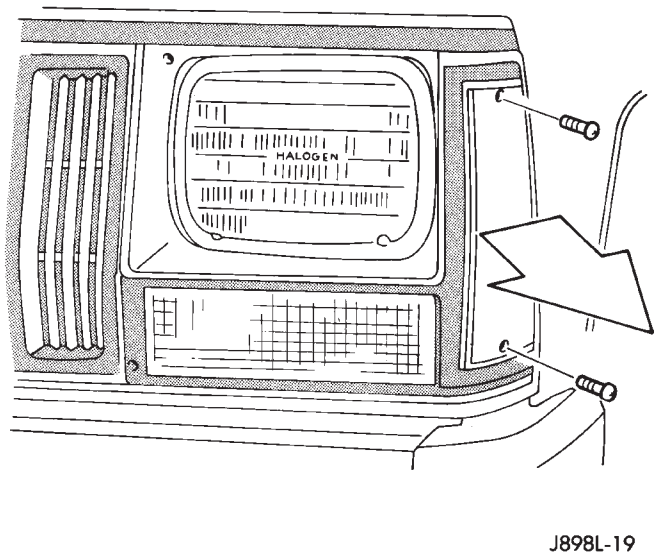

Fig. 11 Side Marker Lamp

HEADLAMP SWITCH—XJ

To remove or replace the headlamp switch. Refer to Group 8E, Instrument Panel and Gauges.

FOG LAMP SWITCH REPLACEMENT—XJ

REMOVAL

The fog lamp switch is located on the instrument panel at the left of the steering column.

(1) Remove instrument panel bezel attaching screws and remove the bezel (Fig. 12).

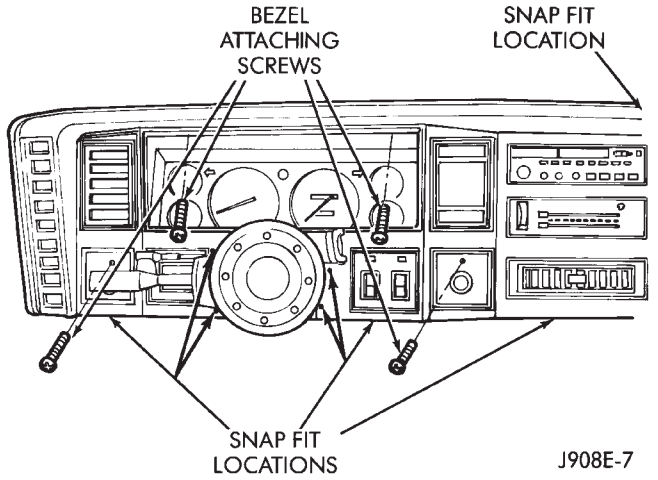

Fig. 12 Instrument Panel Bezel

(2) Remove the fog lamp switch cover.

(3) Disconnect the wire harness connector from the switch.

(4) Squeeze the tabs on the side of the switch and remove the switch from the instrument panel cavity.

INSTALLATION

(1) Squeeze the tabs on the side of the fog lamp switch and insert the switch in the instrument panel cavity.

(2) Connect the wire harness connector to the switch.

(3) Install the fog lamp switch cover.

(4) Position the bezel on the instrument panel and install the attaching screws. Tighten the screws securely.

MULTI-FUNCTION SWITCH SERVICE PROCEDURES—XJ

REMOVAL

(1) Disconnect battery negative cable.

(2) Remove lower instrument panel screws along bottom edge of steering column (Fig. 13).

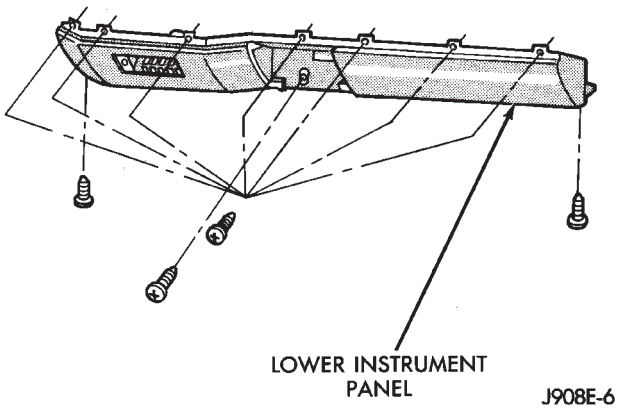

Fig. 13 Lower Instrument Panel/Knee Blocker

(3) Remove lower instrument panel/knee blocker.

(4) Remove tilt lever.

(5) Remove both upper and lower lock shrouds from column (Fig. 14).

(6) Remove lower fixed column cover.

(7) Loosen steering column upper bracket nuts. Do not remove nuts.

(8) Move upper fixed column shroud to gain access to rear of multi-function switch.

(9) Remove multi-function switch tamper proof mounting screws (tamperproof torx bit Snap On TTXR20B2 or equivalent required).

(10) Gently pull switch away from column. Loosen connector screw. The screw will remain in the connector.

(11) Remove connector from multi-function switch (Fig. 15).

INSTALLATION

(1) Install wiring connector to switch and tighten connector screw to 2 N·m (17 in. lbs.).

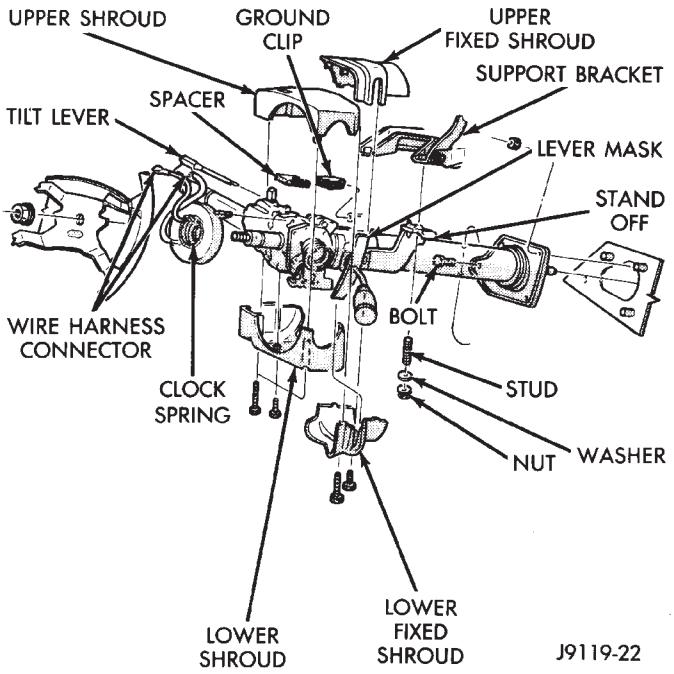

Fig. 14 Steering Column Shrouds

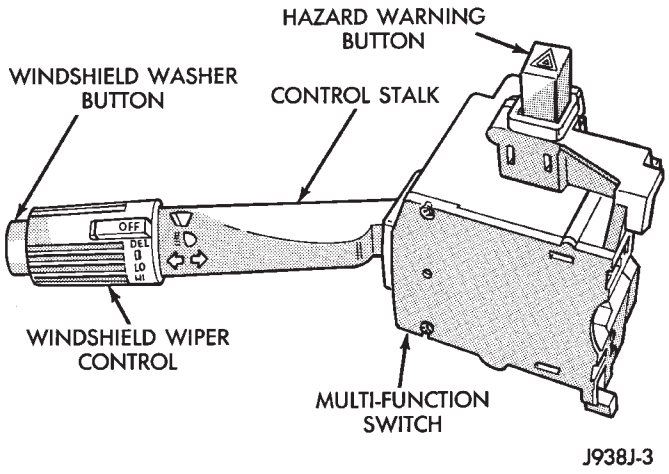

Fig. 15 Multi-function Switch

(2) Mount multi-function switch to column and torque screws to 2 N·m (17 in. lbs.).

(3) Position upper fixed column shroud.

(4) Tighten steering column upper bracket nuts to 12 N·m (110 in. lbs.).

(5) Install lower fixed shroud and upper and lower lock shrouds.

(6) Install tilt lever (tilt column only).

(7) Install battery negative cable.

(8) Check all functions of switch for proper operation.

BACK-UP/REAR TURN SIGNAL/TAIL LAMP BULB REPLACEMENT—XJ

REMOVAL

(1) Remove the tail lamp housing upper retaining screws (Fig. 16). Slide the lamp housing upward off the lower screw while tipping the top of the lamp away from the body and separate it from the rear of the vehicle.

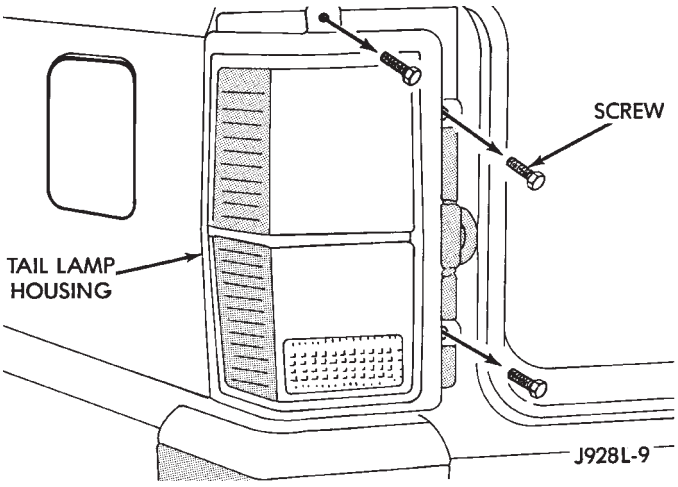

Fig. 16 Tail Lamp Housing

(2) Rotate the bulb socket one-third turn and remove the bulb socket from the lamp housing (Fig. 17).

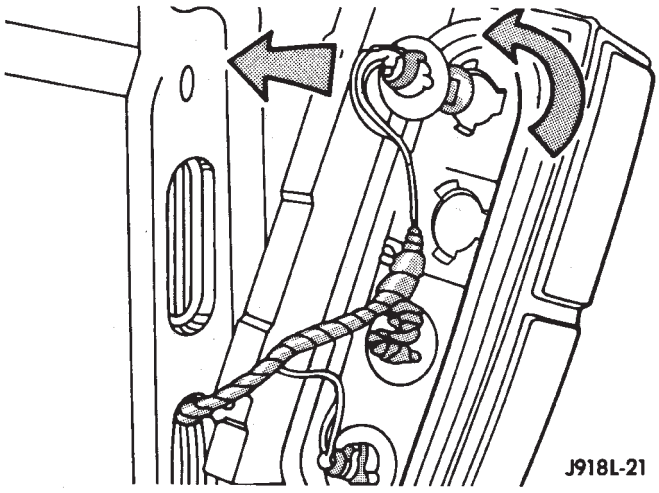

Fig. 17 Bulb Socket Removal

(3) Remove the bulb from the socket.

INSTALLATION

(1) Install a replacement bulb in the socket.

(2) Install the bulb and socket in the lamp housing.

(3) Position the lamp housing in the opening at the rear of the vehicle.

(4) Install the lamp housing screws. Tighten the screws securely.

LICENSE PLATE LAMP—XJ

REMOVAL

(1) Remove screws and the license plate lamp visor from the liftgate (Fig. 18).

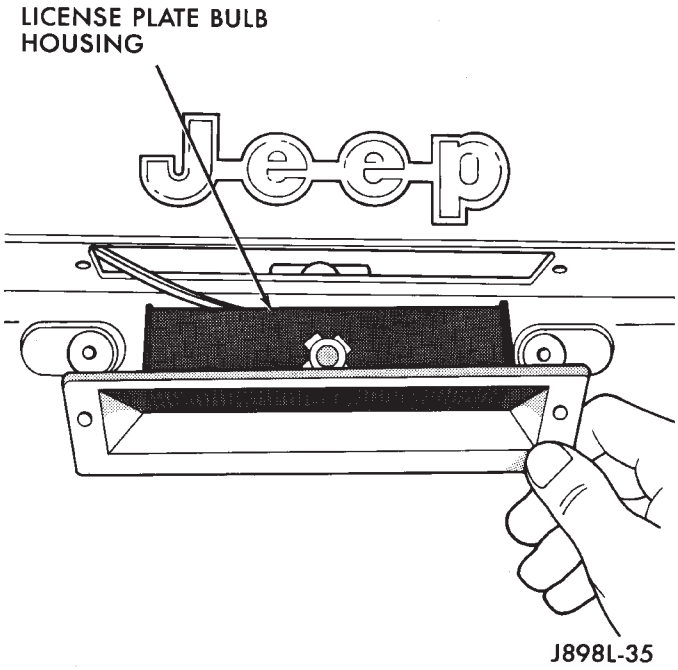

Fig. 18 License Plate Lamp Visor

(2) Remove the bulb from the lamp socket.

INSTALLATION

(1) Install a replacement bulb in the lamp socket.

(2) Position the license plate lamp visor on the liftgate and install screws. Tighten the screws securely.

CENTER HIGH MOUNTED STOP LAMP (CHMSL)—XJ

The CHMSL is mounted at the bottom of the rear window and has two bulbs (Fig. 19).

(1) Raise liftgate.

(2) Remove CHMSL access door (Fig. 20).

(3) Remove CHMSL lamp mounting screws.

(4) Remove CHMSL lamp assembly.

(5) Replace bulbs if necessary (Fig. 21).

To install, reverse removal procedure.

UNDERHOOD LAMP SERVICE INFORMATION—XJ

When equipped, the underhood lamp is installed on the hood right, rear inner panel (Fig. 22). The lamp is illuminated when the hood is opened. The switch provides automatic ON/OFF functions each time the hood is opened and closed.

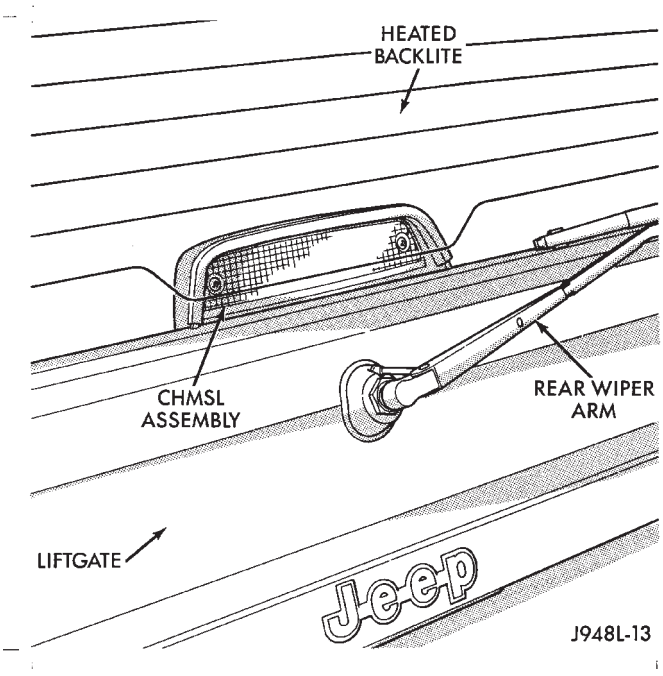

Fig. 19 Center High Mounted Stop Lamp (CHMSL) Assembly

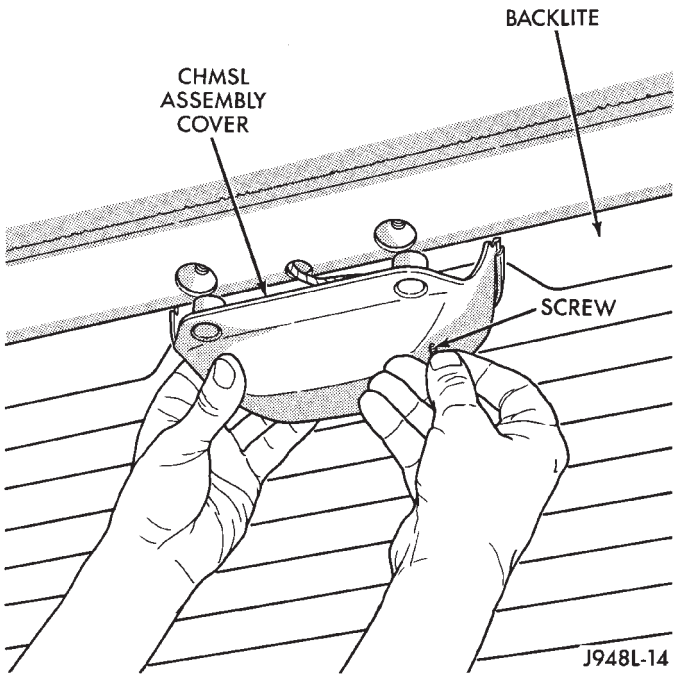

Fig. 20 Removing CHMSL Access Door

UNDERHOOD LAMP BULB REPLACEMENT—XJ

REMOVAL

(1) Disconnect the wire harness connector from the underhood lamp (Fig. 23).

(2) Rotate the bulb counter-clockwise and remove it from the lamp base socket.

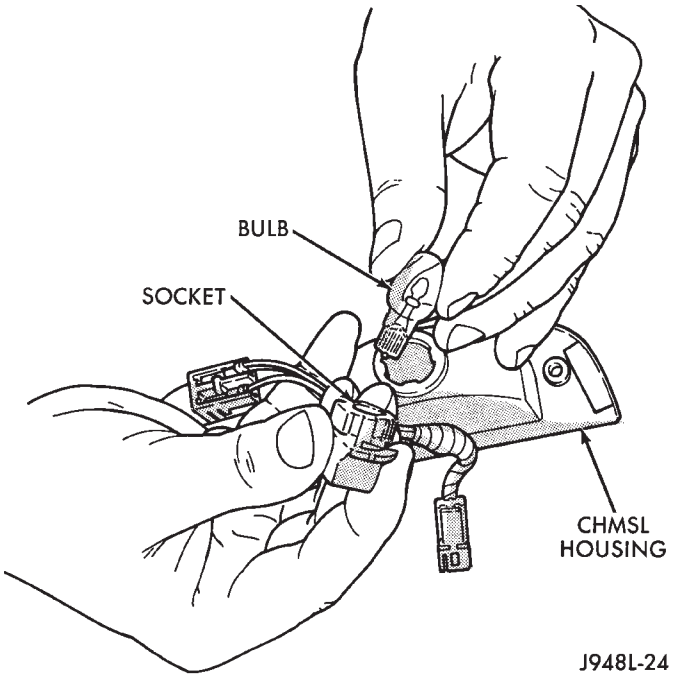

Fig. 21 Replacing CHMSL Bulb

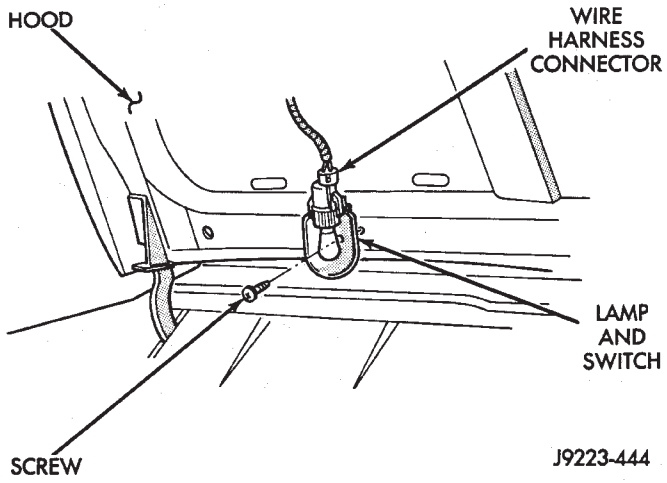

Fig. 22 Underhood Lamp

INSTALLATION

(1) Insert a replacement bulb in the lamp base socket and rotate it clockwise.

(2) Connect the wire harness connector to the lamp.

UNDERHOOD LAMP REPLACEMENT—XJ

REMOVAL

(1) Disconnect the wire harness connector from the lamp.

(2) Rotate the bulb counter-clockwise and remove it from the lamp base socket.

(3) Remove the screw that attaches the lamp reflector and support bracket to the hood inner panel.

(4) Remove the lamp from the hood inner panel.

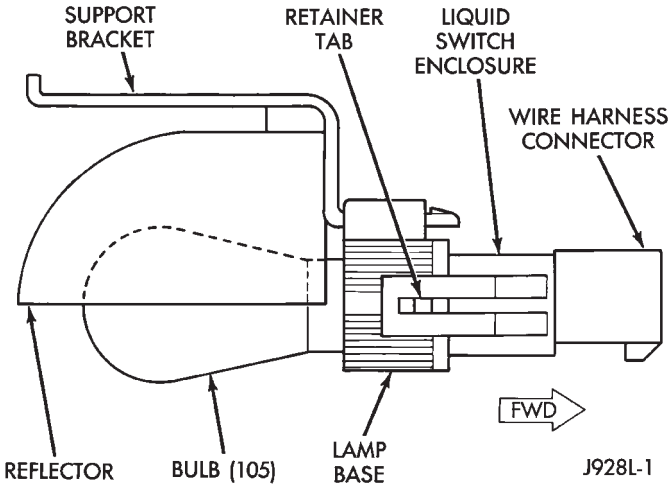

Fig. 23 Underhood Lamp Components

INSTALLATION

(1) Position the underhood lamp on the hood inner panel.

(2) Install the attaching screw through the lamp and into the hood panel. Tighten the screw securely.

(3) Insert a replacement bulb in the lamp base socket and rotate it clockwise.

(4) Connect the wire harness connector to the lamp.

SENTINEL HEADLAMP DELAY MODULE—XJ

SERVICE INFORMATION

The Headlamp Module delays the de-activation of the headlamps for 45 ± 15 seconds after the ignition switch is turned OFF. The driver engages the module by turning the ignition switch OFF, then turning the headlamps OFF.

The headlamp delay module is located behind the I/P next to the headlamp switch.

HEADLAMP DELAY MODULE REPLACEMENT—XJ

The headlamp delay module is attached to the inside of the instrument panel to the right of the headlamp switch.

REMOVAL

(1) Remove the lower instrument panel.

(2) Remove the screw that attaches the module to the inside of the instrument panel.

(3) Disconnect the wire harness connector and remove the module from the instrument panel.

INSTALLATION

(1) Position the module inside the I/P and connect the wire harness connector to the module.

(2) Install the screw that attaches the module to the inside of the instrument panel.

(3) Remove the lower instrument panel.

HEADLAMP DELAY FUNCTION TROUBLE DIAGNOSIS—XJ

DELAY FUNCTION INOPERATIVE

(1) Remove, inspect and test the HD LP DLY fuse. Replace if defective.

(2) Remove the delay module from the I/P. Do not disconnect the wire harness connector. Turn the ignition switch to the RUN position. Place the headlamp switch in headlamps ON position. Turn the ignition to the OFF position for a resistance test.

(3) Measure the resistance from the delay module terminal 4 to vehicle body ground. The ohmmeter should indicate zero ohms. If not, repair the open circuit in the wire harness to vehicle body ground.

(4) Measure the voltage between the delay module terminal 8 and vehicle body ground. The voltmeter should indicate battery voltage. If not, repair the open circuit in the wire harness to the instrument cluster indicator connector terminal 14.

(5) Measure the voltage between the delay module terminal 6 and vehicle body ground. The voltmeter should indicate battery voltage. If not, repair the open circuit in the wire harness to the headlamp switch.

(6) Measure the voltage between the delay module terminal 2 and vehicle body ground. The voltmeter should indicate battery voltage. If not, repair the open circuit in the wire harness to the fuse.

DAYTIME RUNNING LIGHTS (CANADA ONLY)—XJ

SERVICE INFORMATION

The Daytime Running Lights (Headlamps) System is installed on vehicles manufactured for sale in Canada only. The headlamps are illuminated when the ignition switch is turned to the ON position. The DRL module receives a vehicle-moving signal from the vehicle speed sensor. This provides a constant **headlamps-on** condition as long as the vehicle is moving. The lamps are illuminated at less than 50 percent of normal intensity.

DRL MODULE REPLACEMENT—XJ

REMOVAL

The Daytime Running Lights (DRL) module is located on the right fender inner panel adjacent to the dash panel (Fig. 24).

(1) Disconnect the wire harness connector from the module.

(2) Remove the screws that attach the module to the fender inner panel.

(3) Remove the module from the fender inner panel.

INSTALLATION

(1) Position the module on the right fender inner panel.

(2) Install the attaching screws. Tighten the screws securely.

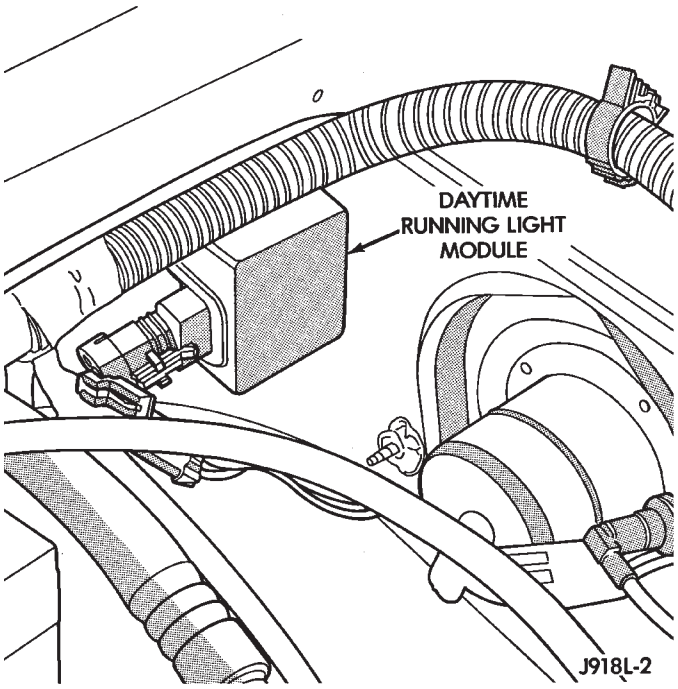

Fig. 24 Daytime Running Lights (DRL) Module

(3) Connect the wire harness connector to the module.

INTERIOR LAMPS

INDEX

page

Dome Lamp Replacement—XJ 17
Dome/Courtesy Lamp Service Information—XJ . . . 16
Dome/Courtesy Lamp Trouble Diagnosis—XJ 16
Lighted Vanity Mirror Trouble Diagnosis—XJ 16
Lighted Vanity Mirror—XJ 16
Overhead Console—XJ 17

DOME/COURTESY LAMP SERVICE INFORMATION—XJ

Voltage is applied at all times via the dome lamp fuse to each of the interior lamp bulbs. The interior lamp bulbs illuminate when they are connected to body ground via the switch:

- Headlamp switch.
- Glove box switch.
- Door pillar switch.
- Liftgate switch (if the cargo lamp is ON).

If equipped with Security Alarm Module, refer to Group 8Q, Vehicle Theft Security System.

DOME/COURTESY LAMP TROUBLE DIAGNOSIS—XJ

ALL LAMPS INOPERATIVE

(1) Rotate the headlamp switch rheostat clockwise. The lamps should light. If not OK, remove, inspect and test the dome lamp fuse. Replace if bad.

(2) If the fuse is OK, repair the open circuit in the wire harness to vehicle body ground.

ONE LAMP INOPERATIVE

(1) Measure the resistance across the bulb holder terminals. The ohmmeter should indicate zero ohms. If not, replace the bulb.

(2) Measure the voltage between the voltage side of the bulb holder and vehicle body ground. The voltmeter should indicate battery voltage. If not, repair the open circuit in the wire harness to the splice.

LAMPS INOPERATIVE WITH ONE OR MORE DOORS OPENED

(1) Remove the inoperative switch from the door pillar and connect the switch wire directly to ground. The lamp should light.

(2) If not, check for an open circuit in black (ground) wire. Repair as necessary. If lamps still do not light, replace the switch.

LIGHTED VANITY MIRROR—XJ

SERVICE INFORMATION

Both the driver and the front passenger sunvisor can be equipped with a lighted vanity mirror. A lamp located at each side of the vanity mirror. The lamps are switched ON automatically when the mirror cover is lifted (Fig. 1).

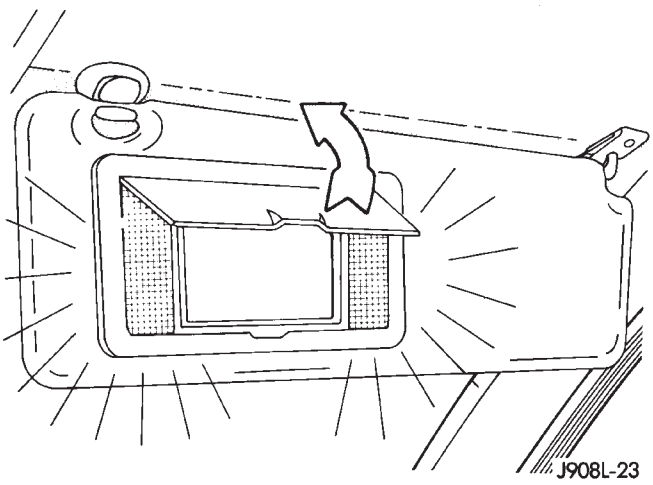

Fig. 1 Lighted Vanity Mirror

Voltage is applied directly to the vanity lamp bulbs via the dome lamp fuse.

LIGHTED VANITY MIRROR TROUBLE DIAGNOSIS—XJ

VANITY LAMPS INOPERATIVE

(1) Remove, inspect and test the dome lamp fuse. Replace if defective.

(2) Test the dome lamp operation. If OK, go to the next step. If not OK, repair the open circuit in the wire harness from the splice.

(3) Measure the voltage between the pink wire on the switch connector and vehicle body ground. The voltmeter should indicate battery voltage. If not OK, repair the open circuit in the wire harness from the splice.

(4) Connect a jumper wire from the ground side of the switch to a good vehicle body ground. Measure the resistance to vehicle body ground. The ohmmeter should indicate zero ohms. If not, repair the open circuit in the wire harness to vehicle body ground.

DOME LAMP REPLACEMENT—XJ

REMOVAL

(1) Remove the dome lamp lens by squeezing it at both sides. This will separate the lens retainer tabs from the lamp housing shoulders.

(2) Pull the lens downward to remove it from the lamp housing.

(3) Remove the lamp housing speed nuts (Fig. 2).

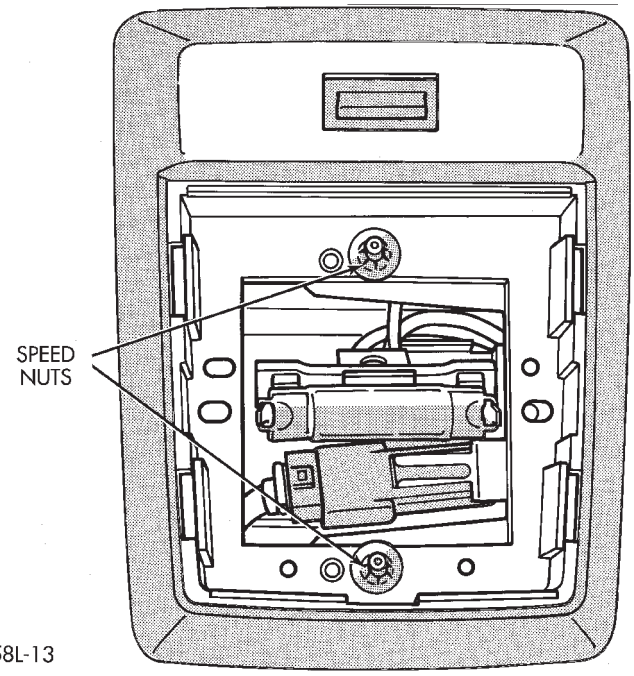

Fig. 2 Dome Lamp Removal/Installation

(4) Disconnect the wire harness connector.

(5) Remove the lamp housing from the headliner cavity.

INSTALLATION

(1) Position the dome lamp housing at the headliner cavity.

(2) Connect the wire harness connector.

(3) Install the lamp housing speed nuts (Fig. 2).

(4) Position the lens at the lamp housing and force it upward into the housing until the retainer tabs are seated on the lamp housing shoulders.

OVERHEAD CONSOLE—XJ

MAP READING LAMP LENS REMOVAL

(1) Make a straight hook at the end of a large paper clip or wire (approximately 1.5-mm/0.06-in diameter).

(2) Insert the wire hook into the hole in the lamp lens and pull downward to detach the lens from the lamp housing (Fig. 3).

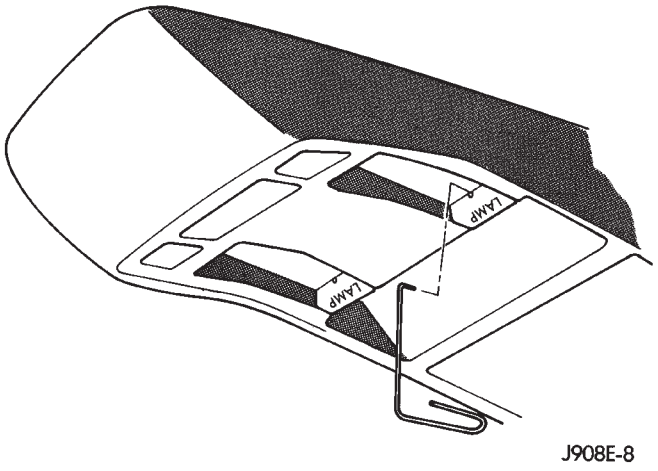

Fig. 3 Map Reading Lamp Lens Removal

MAP READING LAMP LENS INSTALLATION

(1) Insert the tab at the front of the lamp lens into the slot in the lamp housing—shown by arrow 1 in Figure 4.

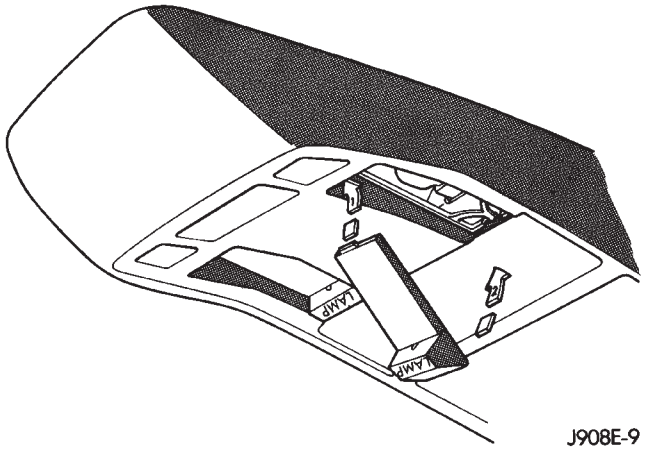

Fig. 4 Map Reading Lamp Lens Installation

(2) Force the rear of the lens upward until it is seated in the lamp housing—shown by arrow 2 in Figure 4.

BULB APPLICATION—XJ VEHICLES

GENERAL INFORMATION

The following Bulb Application Table lists the lamp title on the left side of the column and trade number or part number on the right.

CAUTION: Do not use bulbs that have a higher candle power than the bulb listed in the Bulb Application Table. Damage to lamp can result.

Do not touch halogen bulbs with fingers or other oily surfaces. Bulb life will be reduced.

EXTERIOR LAMPS—XJ

Back-up 1156
Center High Mounted Stoplamp 922
Fog H3
Front Side Marker 194
Headlamp/Sealed Beam H6054
License Plate 168
License Plate W/Outside Spare 67
Park/Turn Signal 2057NA
Tail/Stop 2057
Turn Signal 1156

INTERIOR LAMPS—XJ

Service procedures for most of the lamps in the instrument panel, Instrument cluster and switches are located in Group 8E, Instrument Panel and Gauges. Some components have lamps that can only be serviced by an Authorized Service Center (ASC) after the component is removed from the vehicle. Contact local dealer for location of nearest ASC.

Cargo 561
Dome 561
Dome/Reading 906
Glove Compartment 194
Overhead Console 912
Under Hood 105
Vanity Mirror 74
Underpanel Courtesy 168

INDICATOR LAMPS

Service procedures for most of the lamps in the instrument panel, instrument cluster and switches are located in Group 8E, Instrument Panel and Gauges.

A/C Control 74
Airbag 74
Anti-lock Brake 74
Ash Receiver 1891
Brake Warning 74
Check Engine 74
Cigar Lighter 53
Diesel Wait 74
Fasten Seat Belts 74
Four Wheel Drive 74
Generator 194
Generator/Diesel 74
Heater Control 74
High Beam 194
Illumination 194
Low Fuel 194
Low Washer Fluid 74
Radio .....ASC
Rocker Switch 37
Seat Belt 74
Transfer Case 658
Transmission Floor Shift 658
Turn Signal 194
Shift 74
Water In Fuel 74

LAMPS

CONTENTS

	page		page
BULB APPLICATION—YJ VEHICLES	32	INTERIOR LAMPS	31
GENERAL INFORMATION	19	SERVICE PROCEDURES	22

GENERAL INFORMATION

Each vehicle is equipped with various lamp assemblies. A good ground is necessary for proper lighting operation. Grounding is provided by the lamp socket when it comes in contact with the metal body, or through a separate ground wire.

When changing lamp bulbs check the socket for corrosion. If corrosion is present, clean it with a wire brush and coat the inside of the socket lightly with Mopar Multi-Purpose Grease or equivalent.

DIAGNOSTIC PROCEDURES—YJ

When a vehicle experiences problems with the headlamp system, verify the condition of the battery connections, charging system, headlamp bulbs, wire connectors, relay, high beam dimmer switch and headlamp switch. Refer to Group 8W, Wiring Diagrams for component locations and circuit information.

Always begin any diagnosis by testing all of the fuses and circuit breakers in the system. Refer to Group 8W, Wiring Diagrams.

HEADLAMP DIAGNOSIS

CONDITION	POSSIBLE CAUSES	CORRECTION
HEADLAMPS ARE DIM WITH ENGINE IDLING OR IGNITION TURNED OFF.	1. Loose or corroded battery cables. 2. Loose or worn generator drive belt. 3. Charging system output too low. 4. Battery has insufficient charge. 5. Battery is sulfated or shorted. 6. Poor lighting circuit Z1-ground. 7. Both headlamp bulbs defective.	1. Clean and secure battery cable clamps and posts. 2. Adjust or replace generator drive belt. 3. Test and repair charging system, refer to Group 8A. 4. Test battery state-of-charge, refer to Group 8A. 5. Load test battery, refer to Group 8A. 6. Test for voltage drop across Z1-ground locations, refer to Group 8W. 7. Replace both headlamp bulbs.
HEADLAMP BULBS BURN OUT FREQUENTLY.	1. Charging system output too high. 2. Loose or corroded terminals or splices in circuit.	1. Test and repair charging system, refer to Group 8A. 2. Inspect and repair all connectors and splices, refer to Group 8W.
HEADLAMPS ARE DIM WITH ENGINE RUNNING ABOVE IDLE.*	1. Charging system output too low. 2. Poor headlamp circuit ground. 3. High resistance in headlamp circuit. 4. Both headlamp bulbs defective.	1. Test and repair charging system, refer to Group 8A. 2. Test voltage drop across Z1-ground, refer to Group 8W. 3. Test amperage draw of headlamp circuit. 4. Replace both headlamp bulbs.
HEADLAMPS FLASH RANDOMLY.	1. Poor headlamp circuit ground. 2. High resistance in headlamp circuit. 3. Faulty headlamp switch circuit breaker. 4. Loose or corroded terminals or splices in circuit.	1. Repair circuit ground, refer to Group 8W. 2. Test amperage draw of headlamp circuit. 3. Replace headlamp switch. 4. Repair connector terminals or splices, refer to Group 8W.
HEADLAMPS DO NOT ILLUMINATE.	1. No voltage to headlamps. 2. No ground at headlamps. 3. Faulty headlamp switch. 4. Faulty headlamp dimmer switch. 5. Broken connector terminal or wire splice in headlamp circuit.	1. Replace fuse, refer to group 8W. 2. Repair circuit ground, refer to Group 8W. 3. Replace headlamp switch. 4. Replace headlamp dimmer switch. 5. Repair connector terminal or wire splices.
* Canada vehicles must have lamps ON.		

FOG LAMP DIAGNOSIS

CONDITION	POSSIBLE CAUSES	CORRECTION
FOG LAMPS ARE DIM WITH ENGINE IDLING OR IGNITION TURNED OFF.	1. Loose or corroded battery cables. 2. Loose or worn generator drive belt. 3. Charging system output too low. 4. Battery has insufficient charge. 5. Battery is sulfated or shorted. 6. Poor lighting circuit Z1-ground. 7. Both fog lamp bulbs defective.	1. Clean and secure battery cable clamps and posts. 2. Adjust or replace generator drive belt. 3. Test and repair charging system, refer to Group 8A. 4. Test battery state-of-charge, refer to Group 8A. 5. Load test battery, refer to Group 8A. 6. Test for voltage drop across Z1-ground locations, refer to Group 8W. 7. Replace both lamp bulbs.
FOG LAMP BULBS BURN OUT FREQUENTLY.	1. Charging system output too high. 2. Loose or corroded terminals or splices in circuit.	1. Test and repair charging system, refer to Group 8A. 2. Inspect and repair all connectors and splices, refer to Group 8W.
FOG LAMPS ARE DIM WITH ENGINE RUNNING ABOVE IDLE.	1. Charging system output too low. 2. Poor fog lamp circuit ground. 3. High resistance in fog lamp circuit. 4. Both fog lamp bulbs defective.	1. Test and repair charging system, refer to Group 8A. 2. Test voltage drop across Z1-ground, refer to Group 8W. 3. Test amperage draw of fog lamp circuit. 4. Replace both fog lamp bulbs.
FOG LAMPS FLASH RANDOMLY.	1. Poor fog lamp circuit ground. 2. High resistance in fog lamp circuit. 3. Faulty fog lamp switch circuit breaker. 4. Loose or corroded terminals or splices in circuit.	1. Repair circuit ground, refer to Group 8W. 2. Test amperage draw of fog lamp circuit. 3. Replace fog lamp switch. 4. Repair connector terminals or splices, refer to Group 8W.
FOG LAMPS DO NOT ILLUMINATE.	1. Blown fuse for fog lamps. 2. No ground at fog lamps. 3. Faulty fog lamp switch. 4. Broken connector terminal or wire splice in fog lamp circuit.	1. Replace fuse, refer to group 8W. 2. Repair circuit ground, refer to Group 8W. 3. Replace fog lamp switch. 4. Repair connector terminal or wire splices.

SERVICE PROCEDURES

INDEX

	page
Back-Up/Rear Turn Signal/Tail Lamp Bulb Replacement—YJ	28
Center High Mounted Stop Lamp (CHMSL)—YJ	28
Daytime Running Lights (Canada Only)—YJ	30
Drl Module Replacement—YJ	30
Fog Lamp Replacement—YJ	25
Fog Lamp Switch Replacement—YJ	26
Fog Lamps—YJ	23
Front Park/Turn Signal Lamp Bulb Replacement—YJ	25
Headlamp Alignment Preparation—YJ	22
Headlamp Alignment—YJ	22
Headlamp Bulb Replacement—YJ	23
Headlamp Dimmer Switch Replacement—YJ	26
Headlamp Switch—YJ	26
Headlamp/Fog Lamp Adjustment Using Alignment Screen—YJ	23
Side Marker Lamp Bulb Replacement—YJ	25
Underhood Lamp Bulb Replacement—YJ	29
Underhood Lamp Replacement—YJ	29
Underhood Lamp Service Information—YJ	28

HEADLAMP ALIGNMENT—YJ

Headlamps can be aligned using the screen method provided in this section. Alignment Tool C4466-A or equivalent can also be used. Refer to instructions provided with the tool for proper procedures. **The preferred headlamp alignment setting is 0 for the left/right adjustment and 1″ down for the up/down adjustment.**

HEADLAMP ALIGNMENT PREPARATION—YJ

(1) Verify headlamp dimmer switch and high beam indicator operation.

(2) Correct defective components that could hinder proper headlamp alignment.

(3) Verify proper tire inflation.

(4) Clean headlamp lenses.

(5) Verify that luggage area is not heavily loaded.

(6) Fuel tank should be FULL. Add 2.94 kg (6.5 lbs.) of weight over the fuel tank for each estimated gallon of missing fuel.

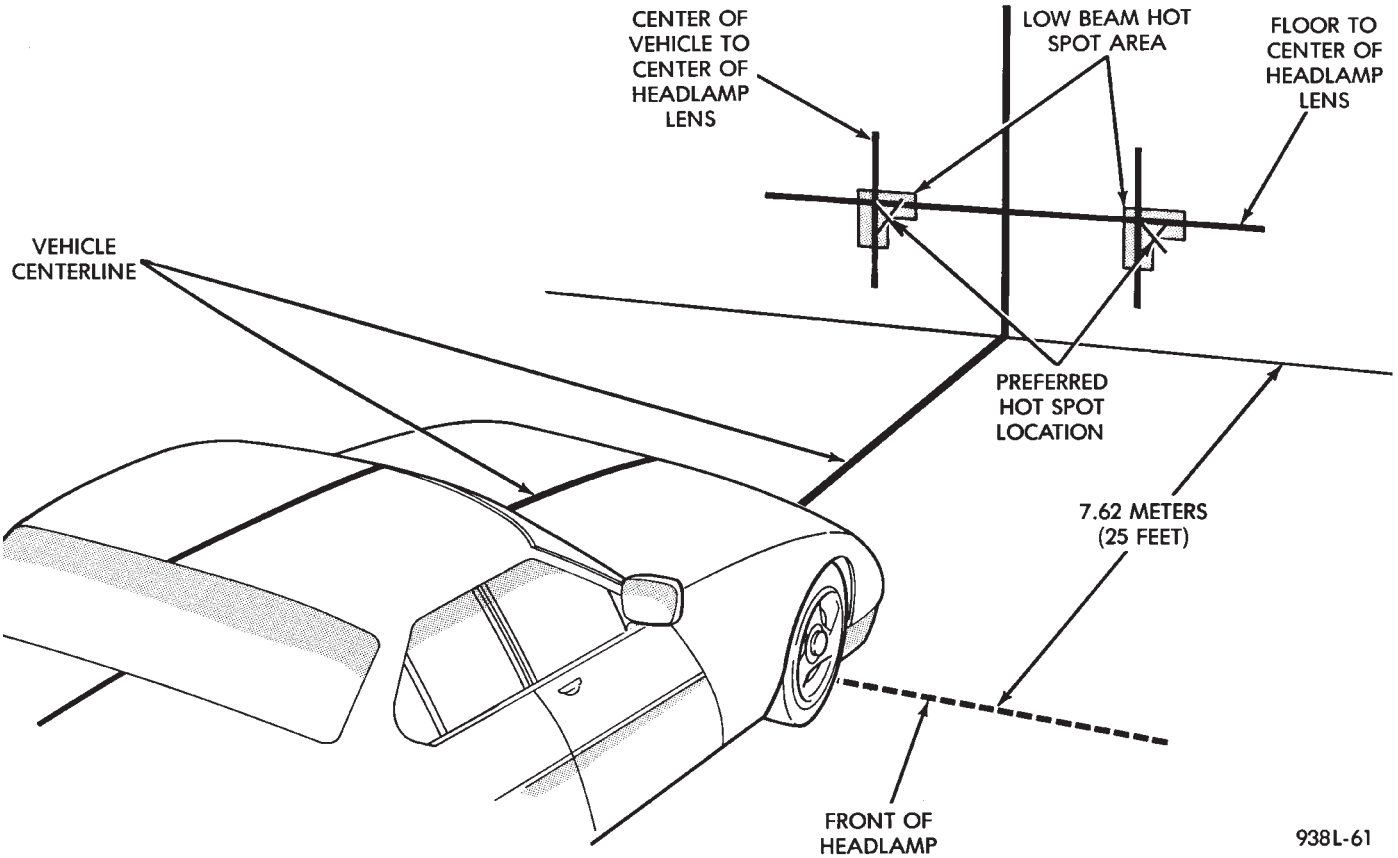

Fig. 1 Headlamp Alignment Screen—Typical

HEADLAMP/FOG LAMP ADJUSTMENT USING ALIGNMENT SCREEN—YJ

ALIGNMENT SCREEN PREPARATION

(1) Position vehicle on a level surface perpendicular to a flat wall 7.62 meters (25 ft) away from front of headlamp lens (Fig. 1).

(2) If necessary, tape a line on the floor 7.62 meters (25 ft) away from and parallel to the wall.

(3) Measure from the floor up 1.27 meters (5 ft) and tape a line on the wall at the centerline of the vehicle. Sight along the centerline of the vehicle (from rear of vehicle forward) to verify accuracy of the line placement.

(4) Rock vehicle side-to-side three times to allow suspension to stabilize.

(5) Jounce front suspension three times by pushing downward on front bumper and releasing.

(6) Measure the distance from the center of headlamp lens to the floor. Transfer measurement to the alignment screen (with tape). Use this line for up/down adjustment reference.

(7) Measure distance from the centerline of the vehicle to the center of each headlamp being aligned. Transfer measurements to screen (with tape) to each side of vehicle centerline. Use these lines for left/right adjustment reference.

ADJUSTMENT

(1) Remove screws and both headlamp bezels.

(2) Clean front of the headlamps.

(3) Place headlamps on LOW beam.

(4) Cover front of the headlamp that is not being adjusted.

(5) Turn vertical adjustment screw (Fig. 2) until the headlamp beam pattern on screen/wall is similar to the pattern depicted in Figure 1.

When using a headlamp aiming screen:

- Adjust the headlamps so that the beam horizontal position is at 0.
- Adjust the beam vertical position is 25 mm (1 in) downward from the lamp horizontal centerline.

(6) Rotate the horizontal adjustment screw until the headlamp beam pattern on the aiming screen/wall similar to the pattern in Figure 1.

(7) Cover front of the headlamp that has been adjusted and adjust the other headlamp beam as instructed above.

(8) Install headlamp bezels. Tighten the screws securely.

FOG LAMP ADJUSTMENT

Prepare an alignment screen. Refer to Alignment Screen Preparation paragraph in this section. A properly aligned fog lamp will project a pattern on the alignment screen 100 mm (4 in.) below the fog lamp centerline and straight ahead (Fig. 3)

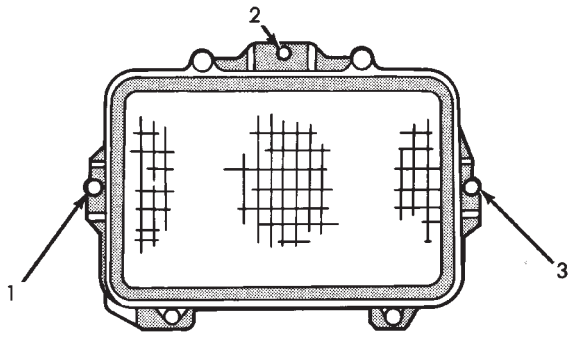

1. HORIZONTAL ADJ. SCREW - RH
2. VERTICAL ADJ. SCREW
3. HORIZONTAL ADJ. SCREW - LH

J908L-24

Fig. 2 Headlamp Beam Adjustment Screws

HEADLAMP BULB REPLACEMENT—YJ

(1) Remove the screws and the headlamp bezel (Fig. 4).

(2) Remove the screws and headlamp bulb retaining ring.

(3) Disconnect the headlamp bulb wire harness connector and remove the bulb from the bucket.

INSTALLATION

(1) Position the bulb in the bucket and connect the wire harness connector.

(2) Position retaining ring on the headlamp bulb and install screws.

(3) Install the headlamp bezel. Tighten the screws securely.

FOG LAMPS—YJ

Fog lamps are turned OFF by the circuit relay when the high beam driving lamps are turned ON.

Fog lamps may be operated ONLY when low beam headlamps are ON. If the headlamps are switched to high beam, the low beam lamps and fog lamps will turn OFF. The fog lamps will go back on when the high beams are switched OFF.

The indicator lamp on the fog lamp switch will go:

- OFF when the high beams lamps are switched ON.
- ON when the high beam lamps are switched OFF.

FOG LAMP BULB REPLACEMENT

CAUTION: Do not touch the bulb glass with fingers or other oily surfaces. Reduced bulb life will result.

(1) Remove the screws that attach the stone shield and the reflector to the lamp housing. Remove the stone shield and reflector from the lamp housing (Fig. 5).

(2) Remove the bulb/element holder from the lens/reflector.

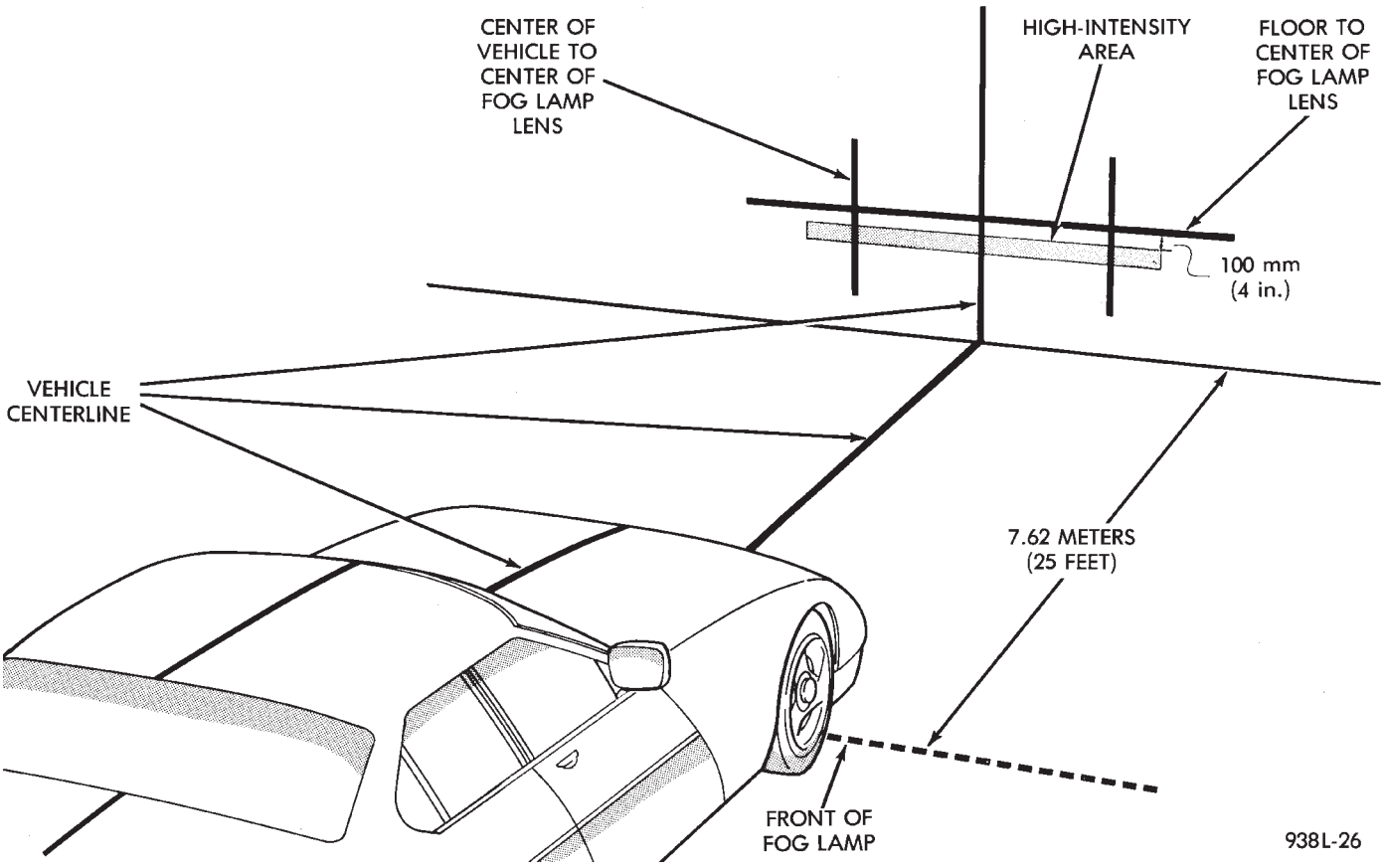

Fig. 3 Fog Lamp Alignment—Typical

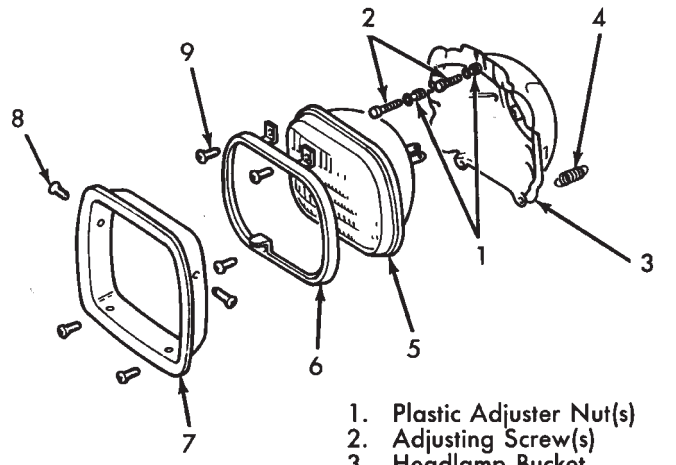

Fig. 4 Headlamp Components

(3) Remove the bulb/element from the holder.

INSTALLATION

(1) Use a clean cloth to install a replacement bulb holder.

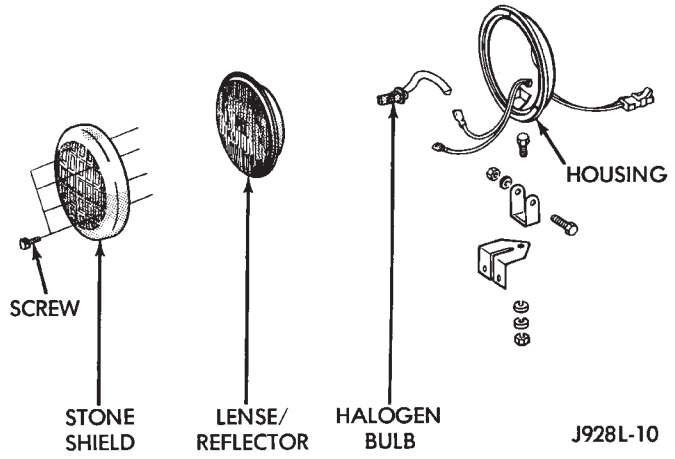

Fig. 5 Fog Lamp

(2) Install the bulb holder in the lens/reflector.

(3) Position the stone shield and reflector on the lamp housing. Install the screws that attach the stone shield and the reflector to the lamp housing. Tighten the screws securely.

FOG LAMP REPLACEMENT—YJ

REMOVAL

(1) Disconnect the fog lamp wire harness connector.

(2) Remove the fog lamp nut(s), washers(s) and bolt(s) from the support bracket (Fig. 5 and 6).

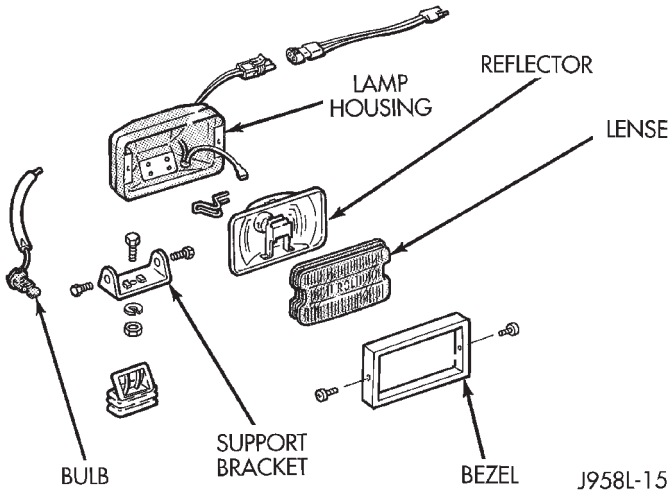

Fig. 6 Rectangular-Shaped Fog Lamp

(3) Remove the fog lamp from the support bracket.

INSTALLATION

(1) Position the fog lamp on the support bracket.

(2) Install the fog lamp bolt(s), washer(s) and nut(s) in the support bracket.

(3) Connect the fog lamp wire harness connector.

FRONT PARK/TURN SIGNAL LAMP BULB REPLACEMENT—YJ

REMOVAL

(1) Remove the park/turn signal lamp housing screws (Fig. 7).

(2) Separate the park/turn signal lamp housing from the grille panel.

(4) Turn the bulb socket and remove it from the lamp housing.

(3) Pull the bulb straight out of the socket.

INSTALLATION

(1) Install a replacement bulb in the socket.

(2) Install the bulb and socket in the lamp housing.

(3) Position the park/turn signal lamp housing at the opening in the grille panel.

(4) Install the lamp housing retaining screws. Tighten the screws securely.

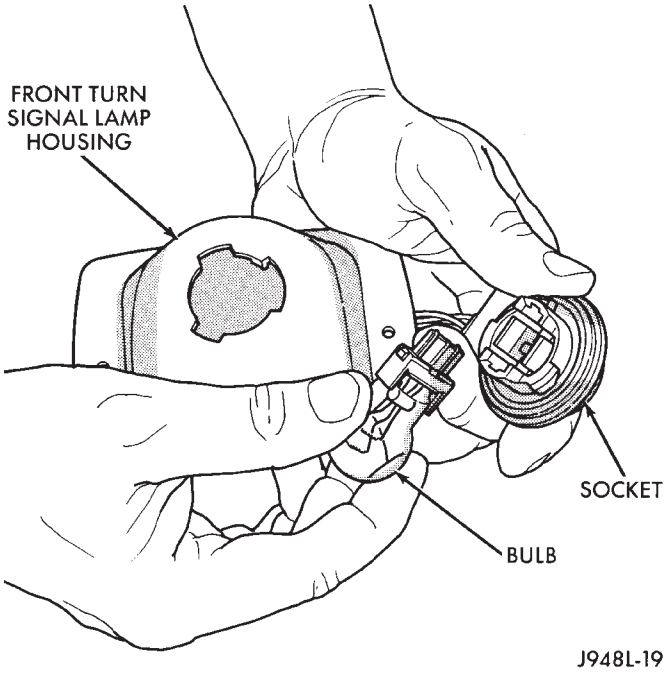

Fig. 7 Park/Turn Signal Lamp Bulb Replacement

SIDE MARKER LAMP BULB REPLACEMENT—YJ

REMOVAL

(1) Remove side marker bulb socket via the underside of the fender. Rotate it one-third turn and separate it from the side marker lamp housing (Fig. 8).

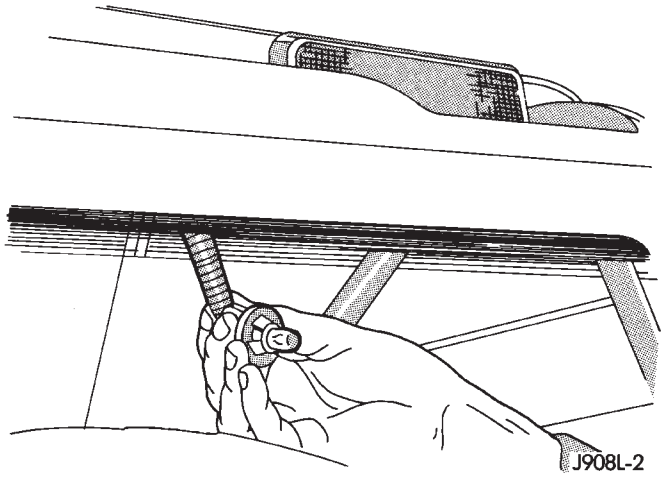

Fig. 8 Side Marker Lamp Bulb

(2) Remove the bulb from the socket by pulling it straight outward.

INSTALLATION

(1) Install a replacement bulb in the socket.

(2) Install the bulb and socket in the side marker lamp housing (Fig. 8).

HEADLAMP SWITCH—YJ

To remove or replace the headlamp switch, refer to Group 8E, Instrument Panel and Gauges.

FOG LAMP SWITCH REPLACEMENT—YJ

REMOVAL

The fog lamp switch is located on the instrument panel at the right of the steering column. The fog lamp circuit relay is located below the left headlamp.

(1) Disconnect the battery negative cable.

(2) Remove the I/P shroud retaining screws (Fig. 9).

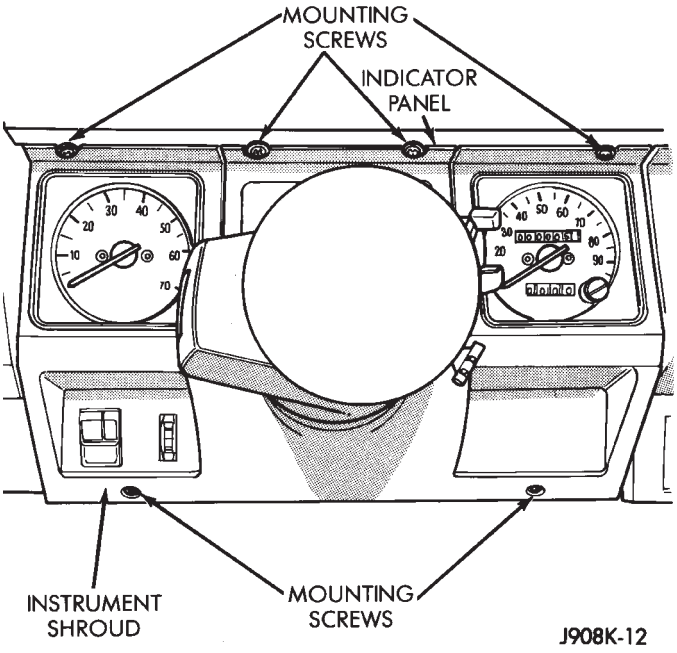

Fig. 9 Instrument Panel Shroud

(3) Move the I/P shroud toward the steering wheel.

(4) Apply upward force to the I/P shroud and downward force to the indicator panel. This will release the indicator panel holding tabs (Fig. 10).

(5) Remove the shroud from the instrument panel.

(6) Remove the fog lamp switch retaining screws.

(7) Disconnect the wire harness connector from the fog lamp switch.

(8) Remove the fog lamp switch from the instrument panel cavity.

INSTALLATION

(1) Position the fog lamp switch in the instrument panel cavity and connect the wire harness connector to the switch.

(2) Install the fog lamp switch retaining screws. Tighten the screws securely.

(3) Position the I/P shroud under the steering column.

(4) Slide the indicator panel holding tabs into the shroud notches.

(5) Place the assembled I/P shroud over the indicator lamp foam gasket.

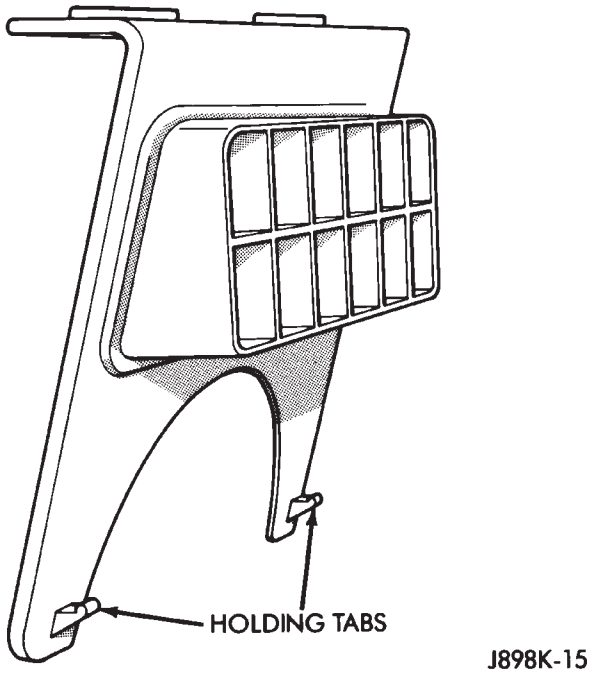

Fig. 10 Indicator Panel Holding Tabs

The foam gasket located on the back side of the indicator panel overlay is fragile. If it is either torn or distorted, replace it.

(6) Install and tighten the indicator panel retaining screws.

(7) Install the remaining shroud screws. Tighten the screws securely.

(8) Connect the battery negative cable.

HEADLAMP DIMMER SWITCH REPLACEMENT—YJ

REMOVAL

(1) Disconnect battery negative cable.

(2) Remove the I/P shroud retaining screws (Fig. 11).

(3) Move the I/P shroud toward the steering wheel and apply upward force to the I/P shroud and downward force to the indicator panel. This will release the indicator panel holding tabs (Fig. 12).

(4) Remove the shroud from the instrument panel.

(5) Support the A/C evaporator housing.

(6) Remove the A/C evaporator housing-to-instrument panel screws (Fig. 13).

(7) Remove the A/C evaporator housing support bracket screw.

(8) Remove the support and lower the A/C evaporator housing.

(9) Disconnect the dimmer switch wire harness connector.

(10) Tape the dimmer switch actuator rod to the steering column.

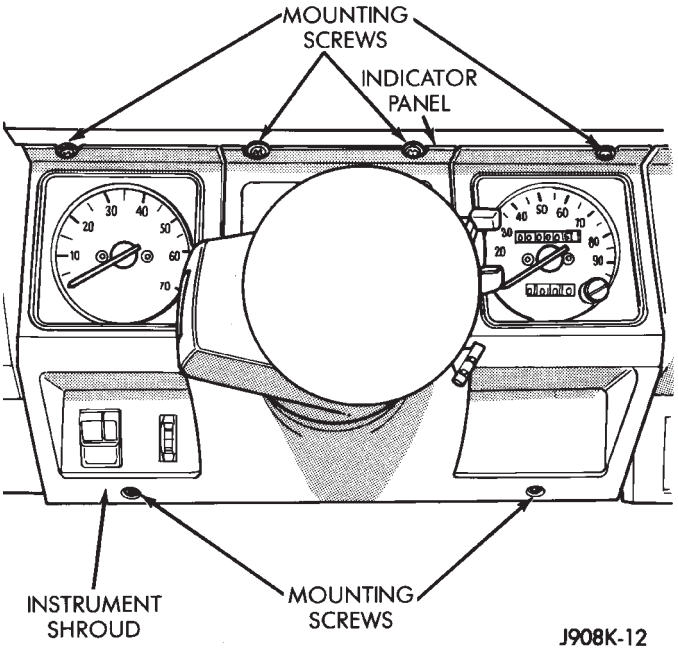

Fig. 11 Instrument Panel Shroud

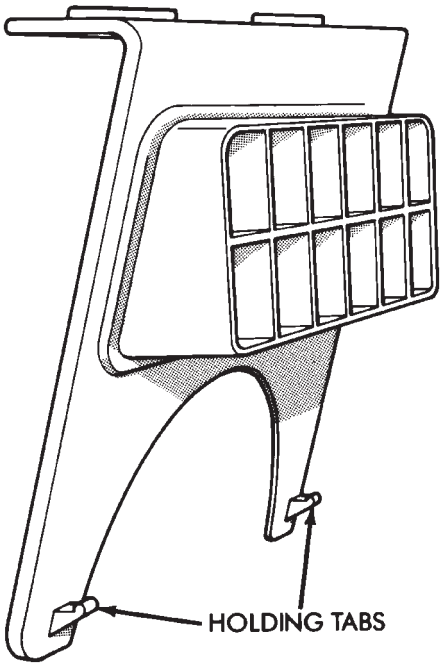

Fig. 12 Indicator Panel Holding Tabs

(11) Remove the dimmer switch screws and detach the switch from the rod.

INSTALLATION

(1) Force the dimmer switch onto the actuator rod and install screws. **DO NOT tighten the retaining screws at this time.**

(2) Remove the tape attaching the actuator rod to the steering column.

(3) Adjust the dimmer switch as follows:

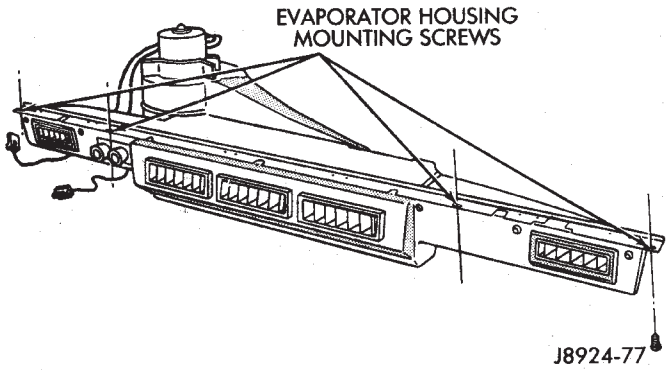

Fig. 13 A/C Evaporator Housing

- Compress the switch and insert a 3/32-inch diameter drill bit into the adjustment hole (Fig. 14).
- The drill bit will prevent any horizontal movement of the switch.

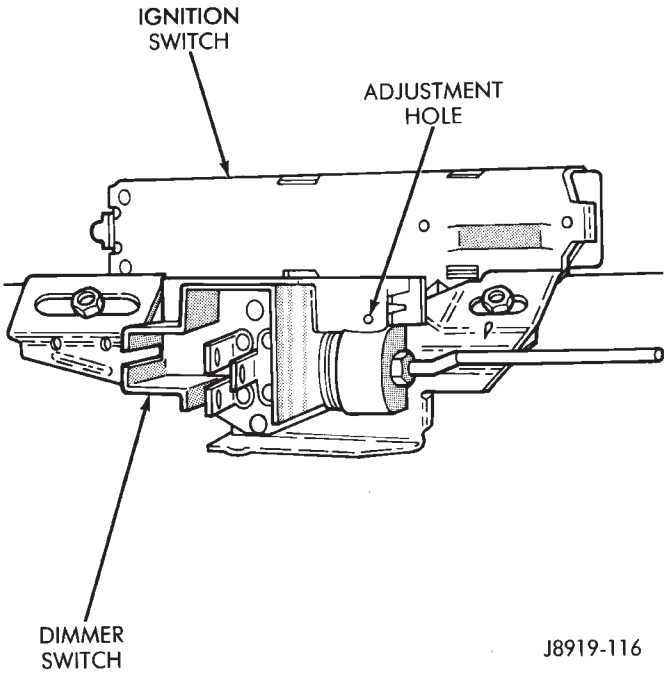

Fig. 14 Headlamp Dimmer Switch Adjustment

- Move the switch toward the steering wheel to remove any existing actuator rod lash.
- Tighten screws with 4 N·m (35 in. lbs.) torque.
- Connect battery negative cable.
- Remove drill bit and test the switch operation.
- Re-adjust the switch, if necessary.

(4) Position the I/P shroud under the steering column.

(5) Slide the indicator panel holding tabs (Fig. 12) into the shroud notches;

(6) Place the assembled I/P shroud over the indicator lamp gasket.

(7) Install and tighten screws.

(8) Install and tighten remaining shroud screws.

(9) Raise and support the A/C evaporator housing (Fig. 13).

(10) Install the evaporator housing-to-instrument panel screws and evaporator support bracket screw.

BACK-UP/REAR TURN SIGNAL/TAIL LAMP BULB REPLACEMENT—YJ

REMOVAL

(1) Remove the lens retaining screws from the tail lamp housing (Fig. 15).

(2) Separate the lens from the tail lamp housing.

(3) Remove the bulb from the lamp socket.

INSTALLATION

(1) Install a replacement bulb in the lamp socket.

(2) Position the lens on the lamp housing.

(3) Install the lens retaining screws. Tighten the screws securely.

CENTER HIGH MOUNTED STOP LAMP (CHMSL)—YJ

The CHMSL is mounted on top of a bracket that attaches to the spare tire carrier (Fig. 16).

(1) Remove the CHMSL lens (Fig. 17).

(2) Remove CHMSL lamp housing (Fig. 18)

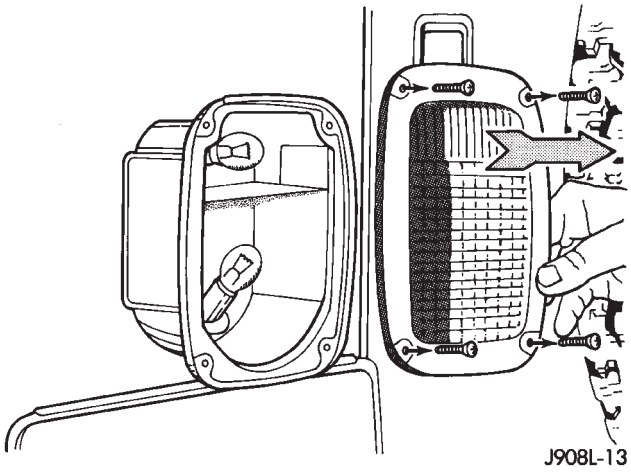

Fig. 15 Back-up/Rear Turn Signal/Tail Lamp Bulb Replacement

(5) Replace bulbs if necessary.

To install, reverse removal procedure.

UNDERHOOD LAMP SERVICE INFORMATION—YJ

When equipped, the underhood lamp is installed on the hood right, rear inner panel (Fig. 19). The lamp is illuminated when the hood is opened. The switch

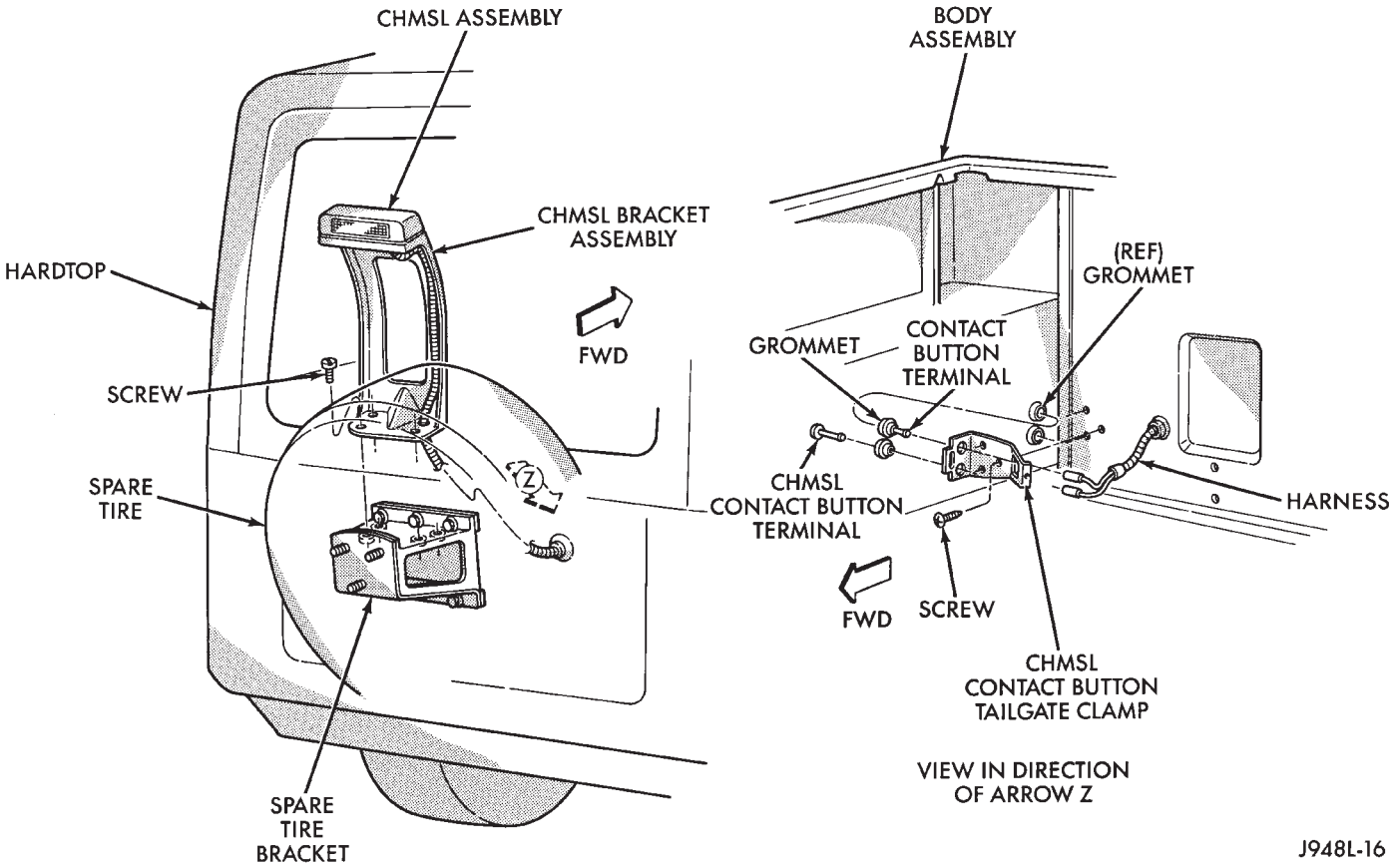

Fig. 16 Center High Mounted Stop Lamp (CHMSL) Bracket Assembly

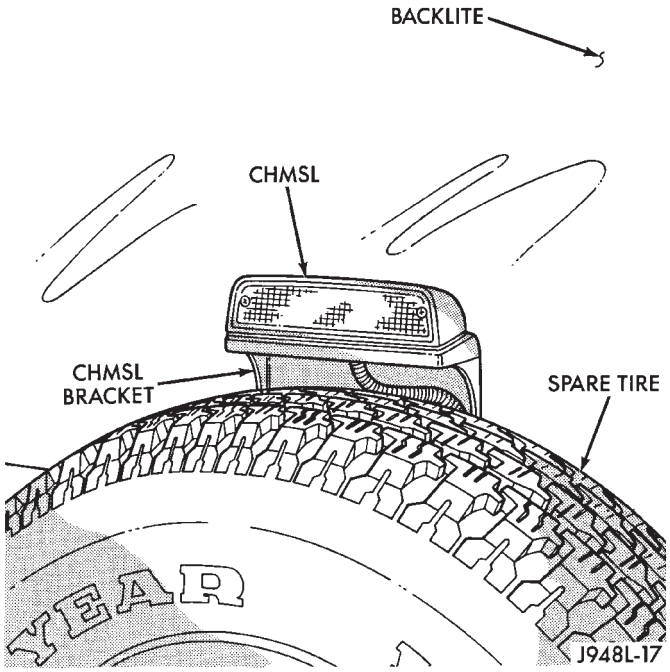

Fig. 17 Removing CHMSL Access Door

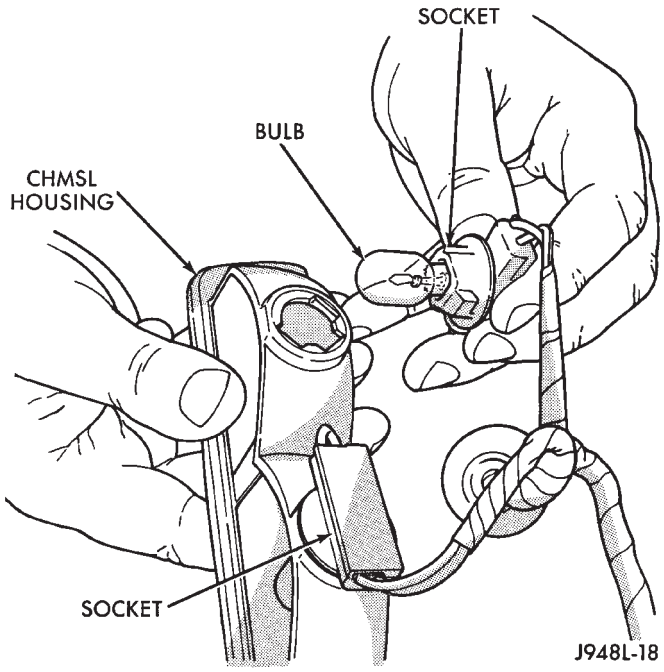

Fig. 18 Replacing CHMSL Bulb

provides automatic ON/OFF functions each time the hood is opened and closed.

UNDERHOOD LAMP BULB REPLACEMENT—YJ

REMOVAL

(1) Disconnect the wire harness connector from the underhood lamp (Fig. 20).

(2) Rotate the bulb counter-clockwise and remove it from the lamp base socket.

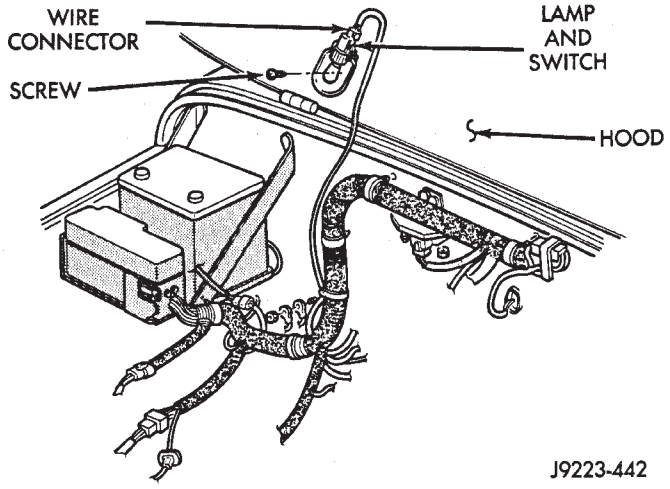

Fig. 19 Underhood Lamp

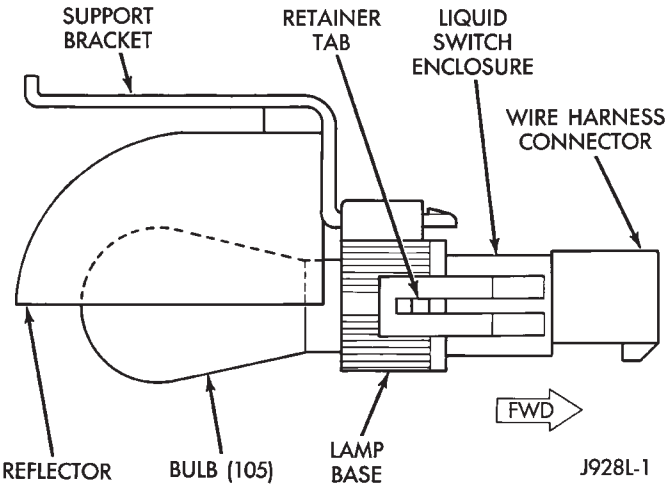

Fig. 20 Underhood Lamp Components

INSTALLATION

(1) Insert a replacement bulb in the lamp base socket and rotate it clockwise.

(2) Connect the wire harness connector to the lamp.

UNDERHOOD LAMP REPLACEMENT—YJ

REMOVAL

(1) Disconnect the wire harness connector from the lamp.

(2) Rotate the bulb counter-clockwise and remove it from the lamp base socket.

(3) Remove the screw that attaches the lamp reflector and support bracket to the hood inner panel.

(4) Remove the lamp from the hood inner panel.

INSTALLATION

(1) Position the underhood lamp on the hood inner panel.

(2) Install the attaching screw through the lamp and into the hood panel. Tighten the screw securely.

(3) Insert a replacement bulb in the lamp base socket and rotate it clockwise.

(4) Connect the wire harness connector to the lamp.

DAYTIME RUNNING LIGHTS (CANADA ONLY)—YJ

The Daytime Running Lights (Headlamps) System is installed on vehicles manufactured for sale in Canada only. The headlamps are illuminated when the ignition switch is turned to the ON position. The DRL module receives a vehicle-moving signal from the vehicle speed sensor. This provides a constant **headlamps-on** condition as long as the vehicle is moving. The lamps are illuminated at less than 50 percent of normal intensity.

DRL MODULE REPLACEMENT—YJ

REMOVAL

The daytime running light module is located on the left fender inner panel below the engine air cleaner housing.

(1) Remove the engine air cleaner housing for access to the DRL module.

(2) Disconnect the wire harness connector from the module.

(3) Remove the screws that attach the module to the fender inner panel (Fig. 21).

(4) Remove the module from the fender inner panel.

INSTALLATION

(1) Position the DRL module on the left, fender inner panel.

(2) Install the attaching screws. Tighten the screws securely.

(3) Connect the wire harness connector to the module.

(4) Install the air cleaner housing.

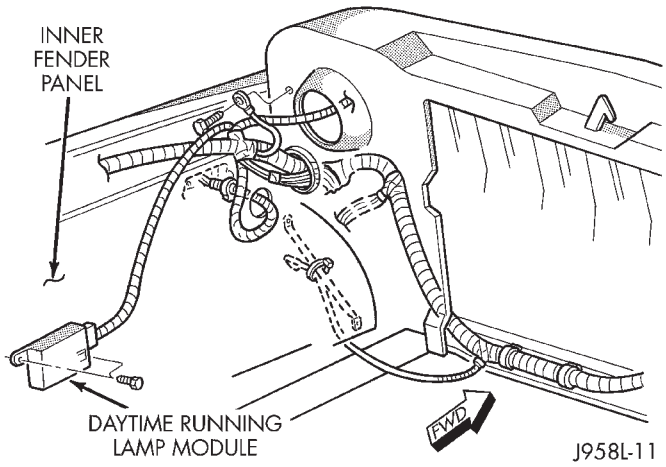

Fig. 21 Daytime Running Lamp Module

INTERIOR LAMPS

INDEX

page

Dome/Courtesy Lamp Service Information—YJ . . . 31
Dome/Courtesy Lamp Trouble Diagnosis—YJ 31
Hardtop Dome/Cargo Lamp Bulb Replacement—YJ Vehicles 31

DOME/COURTESY LAMP SERVICE INFORMATION—YJ

The dome/cargo and underpanel courtesy lamps are controlled via ON/OFF switches. The ON/OFF switches are in the lamp ground circuits. Voltage via the dome/courtesy lamp fuse is applied directly to the lamp bulbs. When either door is opened, the door pillar switch contacts close and provide a direct path to vehicle body ground.

The dome/cargo and underpanel courtesy lamps can also be turned on via the interior lamp illumination rheostat.

DOME/COURTESY LAMP TROUBLE DIAGNOSIS—YJ

ALL LAMPS INOPERATIVE FROM INTERIOR LAMP ILLUMINATION RHEOSTAT

(1) Rotate the interior lamp illumination rheostat in an upward direction. The lamps should light. If not OK, remove, inspect and test the dome lamp fuse. Replace if bad.

(2) If the fuse is OK, repair the open circuit in the wire harness to vehicle body ground.

(3) If lamp still does not light, replace the switch.

ONE LAMP INOPERATIVE

(1) Measure the resistance across the bulb holder terminals. The ohmmeter should indicate zero ohms. If not, replace the bulb.

(2) Measure the voltage between the voltage side of the bulb holder and vehicle body ground. The voltmeter should indicate battery voltage. If not, repair the open circuit in the wire harness to the splice.

LAMPS INOPERATIVE WITH ONE OR MORE DOORS OPENED

(1) Remove the inoperative switch from the door pillar and connect the switch wire directly to ground. The lamp should light.

(2) If not, check for an open circuit in black (ground) wire. Repair as necessary. If lamps still do not light, replace the switch.

HARDTOP DOME/CARGO LAMP BULB REPLACEMENT—YJ VEHICLES

REMOVAL

(1) Remove the dome/cargo lamp lens by squeezing it at both sides. This will separate the lens retainer tabs from the lamp housing shoulders (Fig. 1).

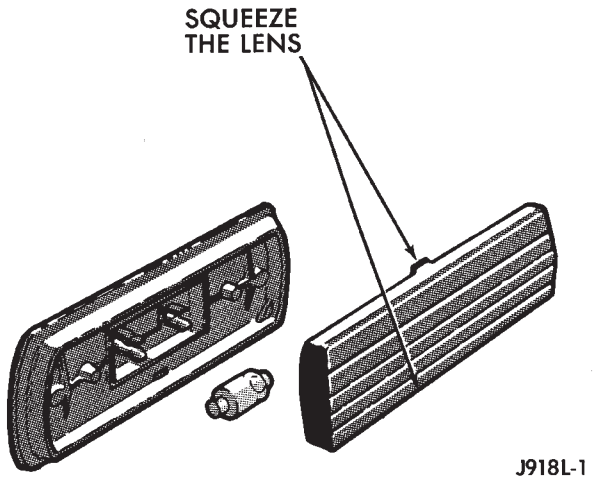

Fig. 1 Hardtop Dome/Cargo Lamp

(2) Remove the lens from the lamp housing.

(3) Pull the bulb straight out to remove from the bulb holder.

INSTALLATION

(1) Insert the replacement bulb in the bulb holder.

(2) Position lens at the lamp housing and force it into the housing until the retainer tabs are seated.

BULB APPLICATION—YJ VEHICLES

GENERAL INFORMATION

The following Bulb Application Table lists the lamp title on the left side of the column and trade number or part number on the right.

CAUTION: Do not use bulbs that have a higher candle power than the bulb listed in the Bulb Application Table. Damage to lamp can result.

Do not touch halogen bulbs with fingers or other oily surfaces. Bulb life will be reduced.

EXTERIOR LAMPS—YJ

Back-up 1156
Center High Mounted Stoplamp 912
Fog H3
Front Side Marker 194
Headlamp/Sealed Beam H6054
Park/Turn Signal 3157
Tail/Stop 1157

INTERIOR LAMPS—YJ

Service procedures for most of the lamps in the instrument panel, Instrument cluster and switches are located in Group 8E, Instrument Panel and Gauges. Some components have lamps that can only be serviced by an Authorized Service Center (ASC) after the component is removed from the vehicle. Contact local dealer for location of nearest ASC.

Dome/Cargo 212-2
Glove Compartment 194
Under Hood 105
Underpanel Courtesy 89

INDICATOR LAMPS

Service procedures for most of the lamps in the instrument panel, instrument cluster and switches are located in Group 8E, Instrument Panel and Gauges.

A/C Control 74
Anti-lock Brake 74
Ash Receiver 1891
Brake Warning 74
Cigar Lighter 53
Fasten Seat Belts 74
Four Wheel Drive 74
Generator 194
Hazard 74
Heater Control 194
High Beam 194
Illumination 194
Low Coolant 74
Radio .....ASC
Rocker Switch 74
Seat Belt 74
Shift 74
Turn Signal 194

RESTRAINT SYSTEMS

CONTENTS

	page		page
AIRBAG SYSTEM	1	GENERAL INFORMATION	1
DIAGNOSIS	2	SERVICE PROCEDURES	2

AIRBAG SYSTEM

WARNING: THIS AIRBAG SYSTEM IS A SENSITIVE, COMPLEX MECHANICAL UNIT. BEFORE ATTEMPTING TO REMOVE OR INSTALL THE AIRBAG SYSTEM OR RELATED STEERING WHEEL AND STEERING COLUMN COMPONENTS YOU MUST FIRST DISARM THE AIRBAG FIRING MECHANISM. FAILURE TO DO SO COULD RESULT IN ACCIDENTAL DEPLOYMENT AND POSSIBLE PERSONAL INJURY.

WARNING: THE AIRBAG MODULE INFLATOR/SENSOR ASSEMBLY CONTAINS SODIUM AZIDE AND POTASSIUM NITRATE. THESE MATERIALS ARE POISONOUS AND EXTREMELY FLAMMABLE. CONTACT WITH ACID, WATER OR HEAVY METALS MAY PRODUCE HARMFUL AND IRRITATING GASES (SODIUM HYDROXIDE IS FORMED IN THE PRESENCE OF MOISTURE) OR COMBUSTIBLE COMPOUNDS.

DO NOT ATTEMPT TO DISMANTLE THE MODULE OR TAMPER WITH ITS ARMING LEVER. DO NOT PUNCTURE, INCINERATE, OR BRING INTO CONTACT WITH ELECTRICITY. DO NOT STORE AT TEMPERATURES EXCEEDING 200°F.

WARNING: REPLACE AIRBAG SYSTEM COMPONENTS WITH PARTS SPECIFIED IN THE CHRYSLER MOPAR PARTS CATALOG ONLY. IT IS OF PARTICULAR IMPORTANCE THAT ANY COMPONENTS USED IN THIS MECHANICALLY-FIRED AIRBAG SYSTEM NOT BE MIXED WITH COMPONENTS FROM AN ELECTRICALLY-FIRED AIRBAG SYSTEM. SUBSTITUTE PARTS MAY APPEAR THE SAME, BUT INTERNAL DIFFERENCES MAY RESULT IN INFERIOR OCCUPANT PROTECTION.

WARNING: THE FASTENERS, SCREWS, AND BOLTS, ORIGINALLY USED FOR THE AIRBAG COMPONENTS, HAVE SPECIAL COATINGS AND ARE SPECIFICALLY DESIGNED FOR THE AIRBAG SYSTEM. THEY MUST NEVER BE REPLACED WITH ANY SUBSTITUTES. ANYTIME A NEW FASTENER IS NEEDED, REPLACE WITH THE CORRECT FASTENERS PROVIDED IN THE SERVICE PACKAGE OR SPECIFIED IN THE CHRYSLER MOPAR PARTS CATALOG.

GENERAL INFORMATION

The airbag system is a standard equipment safety device on XJ (Cherokee) models. It is designed to protect the driver from serious injury, caused by a frontal impact of the vehicle. If the airbag module assembly is defective and non-deployed, refer to Chrysler Corporation current return list for proper handling procedures.

Following are general descriptions of the major components in the airbag system.

AIRBAG MODULE

The airbag module protective cover is the only visible part of the system. The module is mounted directly to the steering wheel. Under the airbag module cover, the airbag cushion and its supporting components are contained. The airbag module contains a housing to which the cushion and impact sensor/inflator assembly are attached and sealed. The airbag module is non-serviceable, and must be replaced if deployed or damaged in any way.

The impact sensor/inflator assembly is mounted to the back of the module. The inflator seals the hole in

the airbag cushion so it can discharge the gas it produces directly into the cushion. The protective cover is fitted to the front of the airbag module and forms a decorative cover in the center of the steering wheel. Upon airbag deployment, this cover will split horizontally.

STORAGE

The airbag module must be stored in its original, special container until used for service. Also, it must be stored in a clean, dry environment; away from sources of extreme heat, sparks, and high electrical energy. Always place or store the module on a surface with the trim cover facing up to minimize movement in case of accidental deployment.

IMPACT SENSOR/INFLATOR ASSEMBLY

The impact sensor/inflator assembly is mounted to the back of the airbag module. It seals the hole in the steering wheel side of the airbag cushion so that gas produced in the inflator can be discharged directly into the cushion.

The impact sensor provides verification of the direction and severity of the impact. A spherical sensing mass housed in a cylinder will move forward and rotate a D-shaft when the vehicle is subjected to a frontal impact of sufficient severity. Airbag inflation is designed to occur at a precisely calibrated vehicle deceleration force, and is not linked to vehicle road speed.

The D-shaft retains two spring-loaded firing pins. When a firing pin is released by the D-shaft, it strikes and ignites a primer. The primer then reacts with the pelletized, solid generant contained in the inflator to produce the nitrogen gas that inflates the airbag cushion.

ARMING/DISARMING MECHANISM

The steering wheel hub incorporates an airbag arming/disarming mechanism and a specially designed nut-blocker. The nut-blocker serves as a safety to prevent removal of the airbag module until the unit has been disarmed. A removable plastic cover plug on the top, outer hub of the steering wheel allows access to the arming screw.

When the airbag module is disarmed, the arming screw extends upward from the steering wheel hub. This will prevent installation of the plastic cover plug. Also, the nut-blocker is retracted to allow access to the two upper airbag module mounting nuts.

When the airbag module is armed, the plastic cover plug will install flush with the outer surface of the steering wheel hub. In addition, the nut-blocker will prevent access to the two upper airbag module mounting nuts.

DIAGNOSIS

This mechanical airbag system can not be diagnosed or repaired. The only serviced component is the airbag module assembly. If the airbag module is damaged in any way or deployed, it must be replaced.

SERVICE PROCEDURES

AIRBAG SYSTEM SERVICE (DEPLOYED)

Any vehicle which is to be returned to use after an airbag deployment, must have the airbag module replaced. This is a one-time component and cannot be reused.

AIRBAG MODULE HANDLING

UNDEPLOYED

At no time should any source of electricity be permitted near the inflator on the back of the module. When carrying an undeployed module, the trim cover should be pointed away from the body to minimize injury in the event of accidental deployment. If the module is placed on a bench or other surface, the plastic trim cover should be face up to minimize movement in case of accidental deployment.

In addition, the airbag module should be disarmed whenever the steering wheel or steering column requires service or removal. Failure to observe this warning could result in accidental airbag deployment and possible personal injury. Refer to Group 19 - Steering for more service procedures on steering wheel and steering column.

DEPLOYED

Following an airbag deployment, the vehicle interior will contain a powdery residue. This residue is primarily sodium bicarbonate (baking soda), used as an airbag cushion lubricant. However, there will also be traces of sodium hydroxide powder, a chemical byproduct of the generant used for airbag deployment. Since this powder can irritate the skin, eyes, nose or throat, be sure to wear safety glasses, rubber gloves and a long-sleeved shirt during cleanup (Fig. 1).

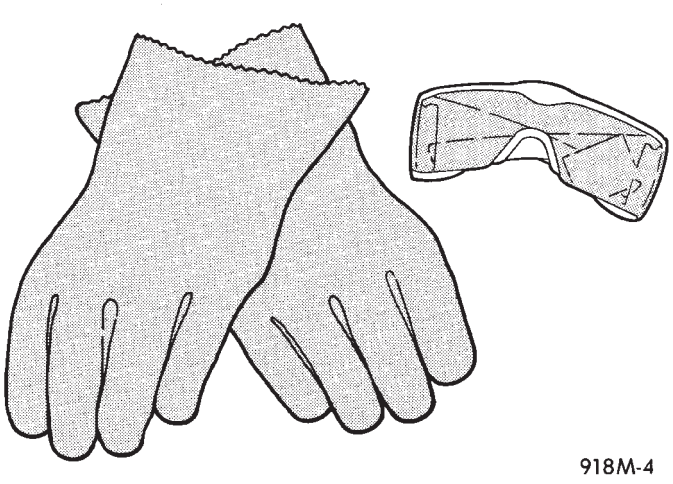

Fig. 1 Wear Safety Glasses and Rubber Gloves

If you experience skin irritation during cleanup, run cool water over the affected area. Also, if you experience irritation of the nose or throat, exit the vehicle for fresh air until the irritation ceases. If irritation continues, see a physician.

CLEANUP PROCEDURE

Remove the airbag and airbag module from the vehicle. Use a vacuum cleaner to remove any residual powder from the vehicle interior. Clean from outside the vehicle and work your way inside, so that you avoid kneeling or sitting on an uncleaned area.

Be sure to vacuum the heater and A/C outlets as well (Fig. 2). Run the blower on low and vacuum any powder expelled from the plenum. You may need to vacuum the interior of the car a second time to recover all of the powder.

Place the deployed airbag and module in your vehicular scrap pile.

AIRBAG MODULE REMOVE/INSTALL

WARNING: THIS AIRBAG SYSTEM IS A SENSITIVE, COMPLEX MECHANICAL UNIT. BEFORE ATTEMPTING TO REMOVE OR INSTALL THE AIRBAG SYSTEM OR RELATED STEERING WHEEL AND STEERING COLUMN COMPONENTS YOU MUST FIRST DISARM THE AIRBAG FIRING MECHANISM. FAILURE TO DO SO COULD RESULT IN ACCIDENTAL DEPLOYMENT AND POSSIBLE PERSONAL INJURY.

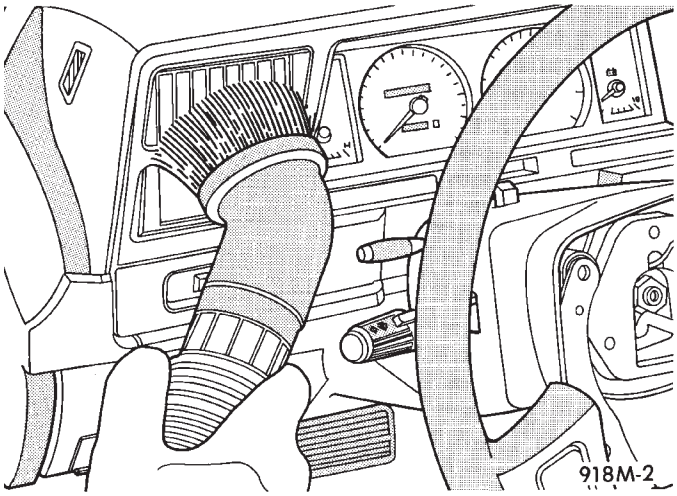

Fig. 2 Vacuum Heater and A/C Outlets

When removing a deployed airbag module, rubber gloves, eye protection and long-sleeved shirt should be worn. There may be deposits on the airbag module and other interior surfaces, which can cause irritation to the skin and eyes in large doses.

(1) Disconnect battery negative cable and isolate.

(2) Using a small screwdriver, remove plastic cover plug from top outer surface of steering wheel hub. Exit vehicle and disarm airbag by reaching through driver's side window and turning arming screw counter-clockwise to its travel limit. When the screw has reached its travel limit it will extend 1 inch above the outer surface of the steering wheel hub cover. This is done using an 8mm socket and manual drive. DO NOT USE POWER-DRIVEN TOOLS.

(3) From back side of steering wheel, remove 4 nuts attaching airbag module to steering wheel (Fig. 3). This is done using a 10mm socket and manual drive. DO NOT USE POWER-DRIVEN TOOLS.

(4) Remove airbag module from steering wheel.

(5) Reverse removal procedures to install. Tighten airbag module attaching nuts to 9 to 11 N·m (80 to 100 in. lbs.). Exit vehicle and arm airbag by reaching through driver's side window and turning arming screw clockwise to its travel limit. Arming screw torque should not exceed 1.1 to 1.7 N·m (10-15 in. lbs.). Reinstall plastic cover plug in steering wheel hub.

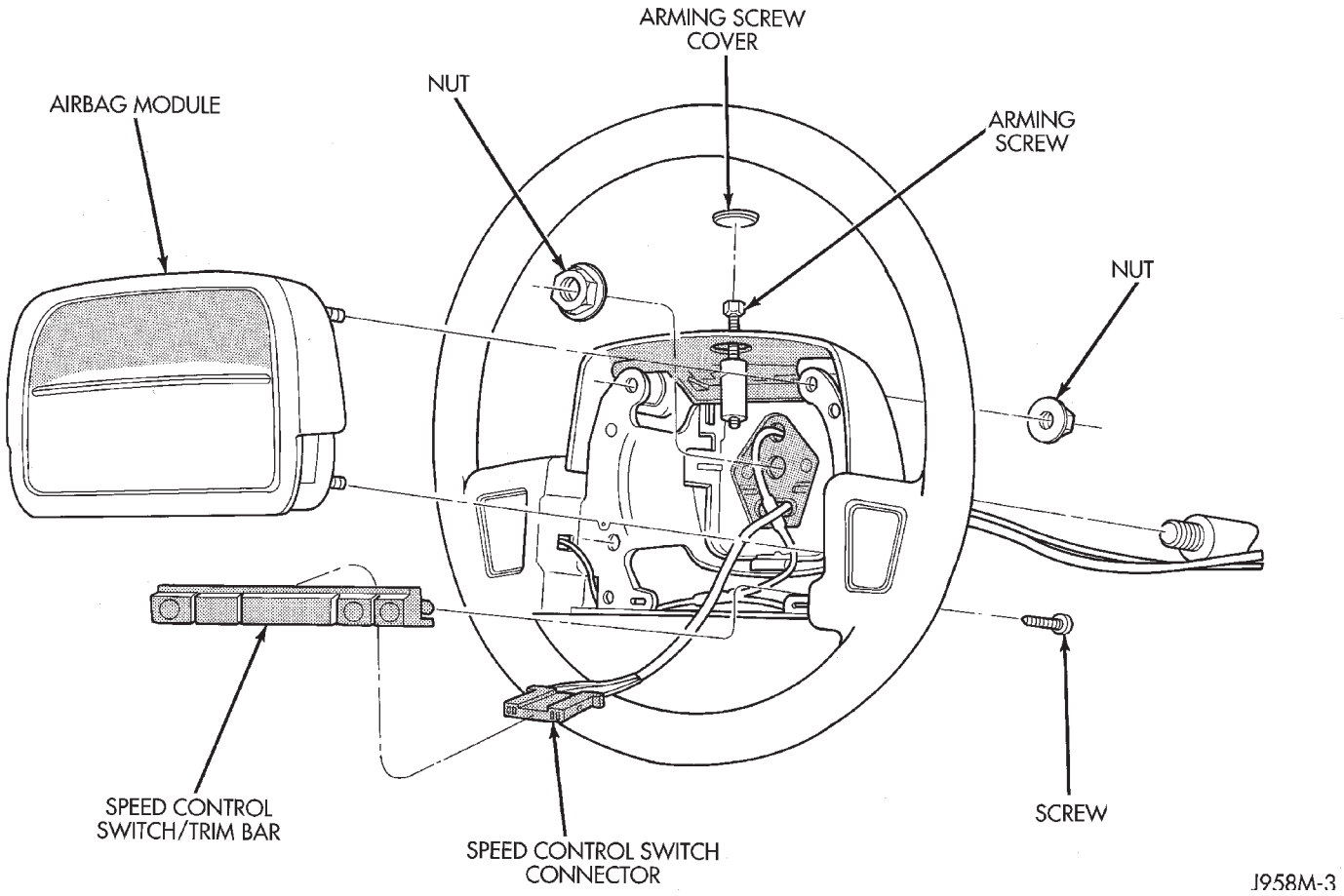

Fig. 3 Airbag Module Remove/Install

REAR WINDOW DEFOGGER

CONTENTS

	page		page
DIAGNOSIS	1	SERVICE PROCEDURES	3
GENERAL INFORMATION	1		

GENERAL INFORMATION

The electrically-heated rear window defogger is an available option on XJ (Cherokee), and YJ (Wrangler) models equipped with the hardtop roof option. Following are general descriptions of the major components in the rear window defogger system. Refer to Group 8W - Wiring Diagrams for complete circuit descriptions and diagrams.

REAR WINDOW GLASS GRID

The heated rear window glass has two electrically-conductive vertical bus bars and a series of horizontal grid lines made of a silver-ceramic material, which is baked on and bonded to the inside surface of the glass. The grid lines and bus bars comprise a parallel electrical circuit.

When the rear window defogger switch is placed in the ON position, current is directed to the rear window grid lines through the bus bars. The grid lines heat the rear window to clear the surface of fog or snow. Circuit protection for the heated grid circuit is provided by fuse 18 (XJ) or fuse 6 (YJ) in the fuseblock module.

The grid lines and bus bars are highly resistant to abrasion. However, it is possible for an open to occur in an individual grid line resulting in no current flow through the line. The grid lines can be damaged or scraped off with sharp instruments. Care should be taken in cleaning the glass or removing foreign materials, decals or stickers. Normal glass cleaning solvents or hot water used with rags or toweling is recommended.

A repair kit is available to repair the grid lines and bus bars, or to reinstall the heated glass pigtail wires.

DEFOGGER SWITCH

The rear window defogger switch is mounted in the instrument panel left of the steering column for XJ, or right of the steering column for YJ. The switch circuit is protected by fuse 8 (XJ) or fuse 9 (YJ) in the fuseblock module. Actuating the switch energizes the relay and electronic timer. A light-emitting diode (LED) in the switch (XJ), or a indicator lamp in the switch (YJ), illuminates to indicate when the system is turned on. The defogger switch can not be repaired. If faulty, the switch must be replaced.

DEFOGGER RELAY/TIMER

The defogger relay/timer is located in the relay center on XJ models, or taped to the instrument panel wiring harness behind the parking brake pedal in the left cowl side area on YJ models. When the rear defogger switch is actuated, the rear defogger relay is energized. This causes current to flow through the grid circuit for approximately 10 minutes, or until the rear window defogger switch or ignition switch are turned off.

DIAGNOSIS

SYSTEM TESTS

Electrically-heated rear window defogger operation can be confirmed in the following manner:

(1) Turn the ignition switch to the ON position.

(2) Turn rear window defogger control switch ON.

(3) Monitor vehicle voltmeter. With the control switch ON, a distinct needle deflection should be noted.

(4) The rear window defogger operation can be checked by feeling the glass. A distinct difference in temperature between the grid lines and adjacent clear glass can be detected within 3 to 4 minutes of operation.

(5) Using a DC voltmeter, contact terminal A (Fig. 1) (passenger side) with the negative lead, and termi-

nal B (driver side) with the positive lead. The voltmeter should read 10-14 volts.

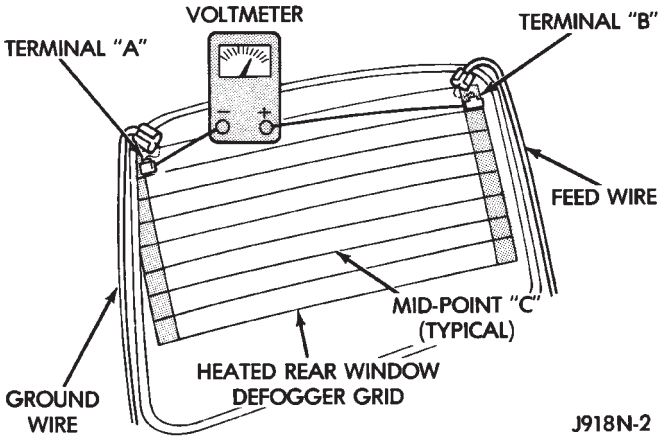

Fig. 1 Rear Window Glass Grid Test

Steps 3, 4 or 5 above will confirm system operation. Indicator light illumination means that there is power available at the output of the switch, but does not confirm that power is reaching the rear window grid lines.

If the rear window defogger does not operate, the problem should be isolated in the following manner:

(1) Confirm that ignition switch is in ON position.

(2) Ensure that the heated rear window feed and ground wires are connected to the glass. Confirm that the ground wire has continuity to ground.

(3) Check fuses 8 and 18 (XJ), or fuses 6 and 9 (YJ) in fuseblock module. Fuses must be tight in their receptacles and all electrical connections must be secure.

When the above steps have been completed and the system is still inoperative, one or more of the following is faulty:

- defogger switch
- relay/timer
- rear window grid lines (all grid lines would have to be broken or one of the feed wires disconnected for the entire system to be inoperative).

If turning the switch ON produces severe voltmeter deflection, check for a short circuit.

REAR WINDOW GLASS GRID

To detect breaks in grid lines, the following procedure is required:

(1) Turn ignition switch to the ON position. Turn rear defogger switch ON. The indicator lamp should light.

(2) Using a 12-volt DC voltmeter, contact vertical bus bar on passenger side of vehicle (point A of Fig. 1) with negative lead of voltmeter. With positive lead of voltmeter, contact vertical bus bar on driver side of vehicle (point B of Fig. 1). The voltmeter should read 10-14 volts.

(3) With negative lead of voltmeter, contact a good body ground point. The voltage reading should not change. A different reading indicates a poor ground connection.

(4) Connect negative lead of voltmeter to point A on passenger side bus bar and touch each grid line at mid-point with positive lead. A reading of approximately 6 volts indicates a line is good. A reading of zero volts indicates a break in the grid line between mid-point C and point B. A reading of 10-14 volts indicates a break between mid-point C and point A. Move toward break and voltage will change as soon as break is crossed.

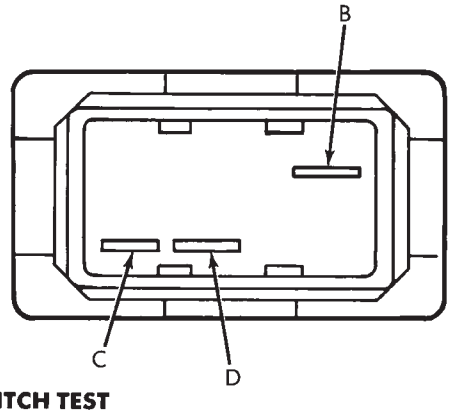

SWITCH DIAGRAM

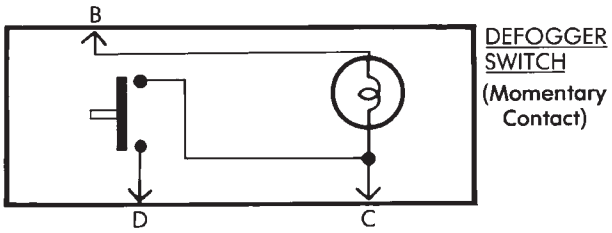

SWITCH TEST

SWITCH POSITION	TERMINALS	ZERO OHMS
On/Off	B and D	Almost zero ohms (bulb filament) with switch button depressed
On/Off	D and C	
At Rest (Neutral)	B and C	Almost zero ohms (bulb filament)

J928N-1

DEFOGGER SWITCH

With defogger switch connector separated from defogger switch; turn ignition switch to ON for voltage tests, or turn ignition switch to OFF for resistance tests.

(1) Measure voltage at defogger switch connector terminal D. The meter should read approximately 5 volts momentarily. If OK, go to next step. If not OK, repair open from relay.

(2) Refer to switch diagram for resistance tests. If not OK, replace defogger switch.

DEFOGGER RELAY

With defogger relay connector separated from defogger relay; turn ignition switch to ON for voltage tests, or turn ignition switch to OFF for resistance tests.

(1) Measure voltage at relay connector terminal 4. The meter should read battery voltage. If OK, go to next step. If not OK, repair open from fuse 18 (XJ) or fuse 9 (YJ).

(2) Measure voltage at relay connector terminal 5. The meter should read battery voltage. If OK, go to next step. If not OK, repair open from fuse 8 (XJ), or fuse 6 (YJ).

(3) Measure resistance between relay connector terminal 1 and left side (driver's side) of defogger grid. The meter should read zero ohms. If OK, go to next step. If not OK, repair open between relay connector and left side of defogger grid.

(4) Measure resistance between relay connector terminal 2 and a clean chassis ground. The meter should read zero ohms. If OK, go to next step. If not OK, repair open between relay connector and ground.

(5) Connect relay connector and measure voltage at terminal 3. The meter should read approximately 5 volts. If not OK, replace defogger relay.

SERVICE PROCEDURES

REAR WINDOW GLASS GRID REPAIRS

The repair of grid lines, bus bars or pigtail wires can be accomplished using the MOPAR Rear Window Defogger Repair Kit (P/N 4267922) or equivalent.

WARNING: MATERIALS CONTAINED IN REPAIR KIT MAY CAUSE SKIN OR EYE IRRITATION. CONTAINS EPOXY RESIN AND AMINE TYPE HARDENER, HARMFUL IF SWALLOWED. AVOID CONTACT WITH SKIN AND EYES. FOR SKIN, WASH AFFECTED AREAS WITH SOAP AND WATER. DO NOT TAKE INTERNALLY. IF TAKEN INTERNALLY, INDUCE VOMITING; CALL A PHYSICIAN IMMEDIATELY. IF IN CONTACT WITH EYES, FLUSH WITH PLENTY OF WATER. USE WITH ADEQUATE VENTILATION. DO NOT USE NEAR FIRE OR FLAME. CONTENTS CONTAIN 3% FLAMMABLE SOLVENTS. KEEP OUT OF REACH OF CHILDREN.

(1) Mask repair area so that the conductive epoxy can be applied neatly. Extend epoxy application onto the grid line or the bus bar (Fig. 2) on either side of the break.

(2) Follow instructions in repair kit for preparing damaged area.

(3) Remove package separator clamp and mix two conductive epoxy components thoroughly within packaging. Fold package in half and cut center corner to dispense epoxy.

(4) For grid line, mask area to be repaired with masking tape or a template (Fig. 2).

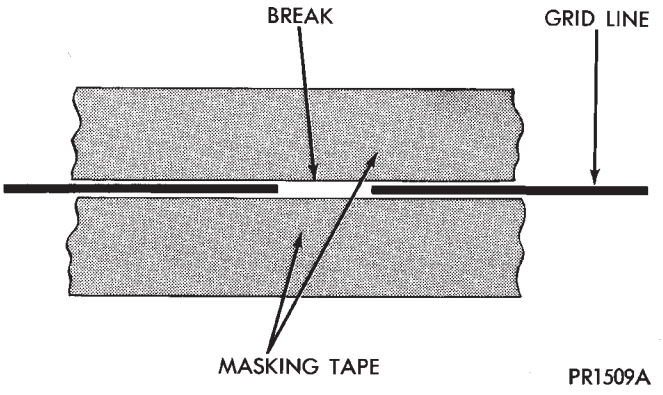

Fig. 2 Grid Line Repair (Typical)

(5) Apply epoxy through slit in masking tape or template. Overlap both ends of the break by at least 19mm (.75 in.).

(6) For a terminal or pigtail replacement, mask adjacent areas so epoxy can be extended onto line as well as bus bar. Apply a thin layer of epoxy to area where terminal or pigtail was fastened and onto adjacent grid line.

(7) Apply a thin layer of conductive epoxy to terminal or bare wire end of pigtail and place in desired location. To prevent terminal or pigtail from moving while the epoxy is curing, it must be wedged or clamped.

(8) Carefully remove masking tape from grid line.

CAUTION: Do not allow the glass surface to exceed 400°F, glass may fracture.

(9) Allow epoxy to cure 24 hours at room temperature or use heat gun with a 260°-371°C (500°-700°F) range for 15 minutes. Hold gun approximately 254mm (10 inches) from repaired area.

(10) After conductive epoxy is properly cured remove wedge or clamp from terminal or pigtail and check operation of rear window defogger. Do not attach connectors until curing is complete.

DEFOGGER SWITCH REMOVE/INSTALL

XJ MODELS

(1) Remove the instrument cluster bezel. Refer to Group 8E - Instrument Panel and Gauges for procedure.

(2) Remove the switch housing panel.

(3) Unplug the switch connector. Slightly depress the switch mounting tabs and remove the switch.

(4) Reverse removal procedures to install.

YJ MODELS

(1) Remove 6 bezel screws (Fig. 3).

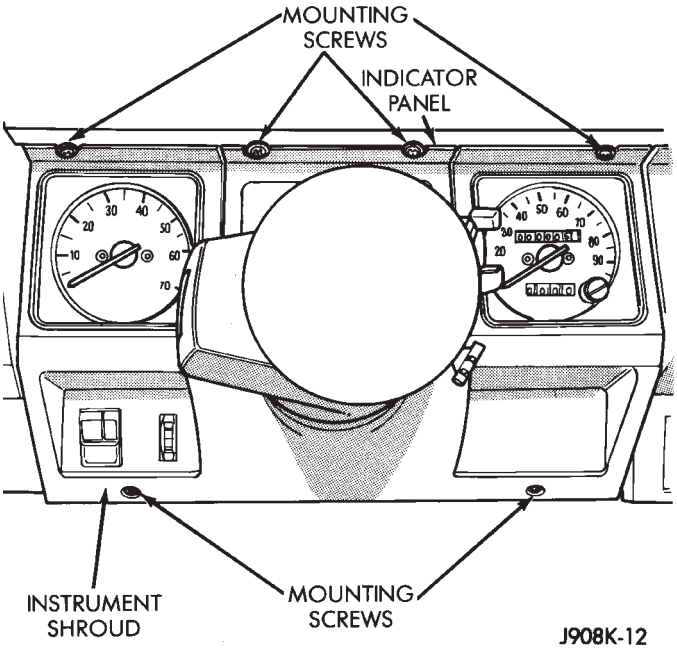

Fig. 3 Instrument Bezel Remove/Install—YJ

(2) Slide bezel toward the steering wheel.

(3) Remove 3 screws (Fig. 4).

(4) Unplug the connector from the defogger switch.

(5) Squeeze the ends of the switch to release the plastic retaining fingers and push outward.

(6) Reverse removal procedures to install.

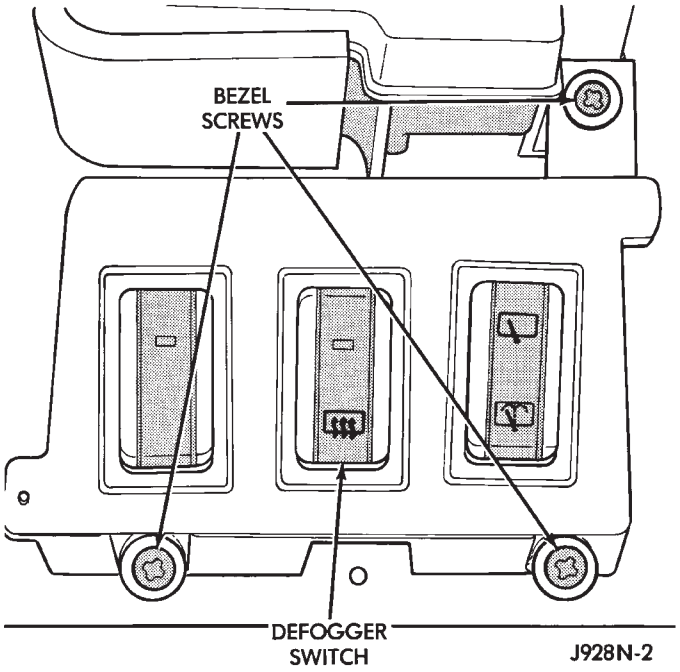

Fig. 4 Defogger Switch Remove/Install—YJ

DEFOGGER RELAY/TIMER REMOVE/INSTALL

XJ MODELS

The rear defogger relay is in the relay center. The relay center is located on the lower instrument panel trim cover just right of the steering column.

(1) Remove the rear defogger relay (red) from the relay center (Fig. 5).

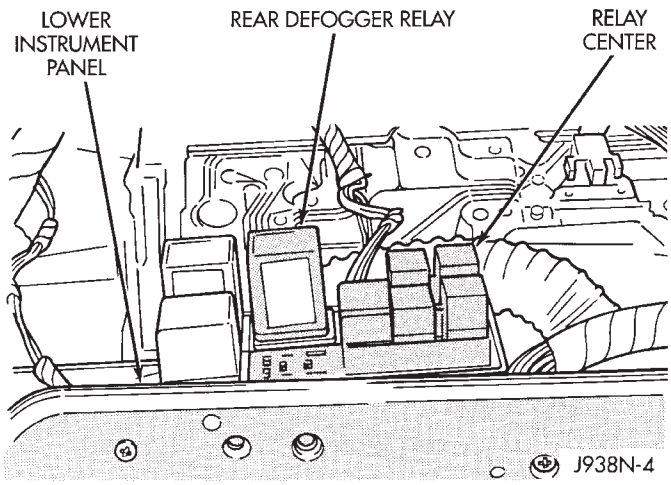

Fig. 5 Rear Defogger Relay—XJ

(2) Reverse removal procedures to install.

YJ MODELS

The rear defogger relay is located behind the parking brake pedal in the left cowl side area. Unplug relay from connector and replace with new relay. Be certain that relay is taped back into place on harness with plastic cover facing up and terminals facing down.

POWER LOCKS

CONTENTS

page

DIAGNOSIS 2
GENERAL INFORMATION 1
SERVICE PROCEDURES 8

GENERAL INFORMATION

Power locks are optional equipment on XJ (Cherokee) models. Power windows and the keyless entry system are included on vehicles equipped with the power lock option. All doors and the liftgate can be locked and unlocked electrically by operating the switch on either front door panel, or by operating the lock and unlock buttons of the remote keyless entry transmitter. The power lock and keyless entry systems operate with battery power supplied independent of the ignition switch.

Following are general descriptions of the major components in the power lock system. Refer to Group 8W - Wiring Diagrams for complete circuit descriptions and diagrams. Refer to the owner's manual for more information on the features and use of these systems.

POWER LOCK SWITCH

The power locks are controlled by a two-way switch mounted on the trim panel of each front door. The switch controls battery feed to the lock and unlock relays. The door lock switches can not be repaired. If faulty, the entire switch must be replaced.

POWER LOCK/UNLOCK RELAYS

The power lock and unlock relays are located in the relay center. The relay center is located on the lower instrument panel reinforcement behind the lower instrument panel and just right of the steering column. The relays respond to inputs from the power lock switches and the keyless entry module by sending the correct battery and ground feeds to the lock motors. The lock and unlock relays can not be repaired. If faulty, they must be replaced.

POWER LOCK MOTOR

The locks are actuated by a reversible motor mounted within each door. The motor direction is controlled by the battery and ground feeds from the power lock/unlock relays. The motor can not be repaired. If faulty, the entire motor must be replaced.

KEYLESS ENTRY TRANSMITTER

The keyless entry transmitter is equipped with two buttons labeled Lock and Unlock. It is also designed to serve as a key fob and is equipped with a key ring. Each transmitter has a different vehicle access code, which must be programmed into the memory of the keyless entry module in the vehicle in order to operate the locks. The operating range of the infrared transmitter signal is up to 4.75 meters (15 feet) from the receiver.

The transmitter operates on two CR1616 3-volt (or equivalent) batteries. Typical battery life is from one to two years.

KEYLESS ENTRY MODULE

The keyless entry module is mounted in a housing on the headliner near the windshield between the sunvisors, or inside and towards the rear of the overhead console (if equipped). This module contains the keyless entry receiver and program logic for the keyless entry system.

The keyless entry module has a memory function to retain the vehicle access code of at least one, and up to four transmitters. The module receives input from the remote keyless entry transmitter. In response to that input, it is programmed to control outputs to the lock and unlock relays. The module can not be repaired and, if faulty, must be replaced.

DIAGNOSIS

As a preliminary system diagnosis, note system operation while you actuate both the Lock and Unlock functions with the power lock switches and the keyless entry transmitter. Then, proceed as follows:

- If system fails to function with either the switches or the transmitter, see Power Lock System diagnosis.
- If system functions with both switches, but not the transmitter, see Keyless Entry Transmitter diagnosis.
- If system functions with transmitter, but not with one or both switches, see Power Lock System diagnosis.
- If one lock fails to operate with the switches or transmitter, see Power Lock Motor diagnosis.

POWER LOCK SYSTEM

(1) Inspect fuse 13 in fuseblock module. Replace if necessary. If OK, measure voltage at battery side of fuse. There should be 12 volts. If not OK, repair open from Power Distribution Center.

(2) Remove door switch(es) and measure voltage at terminal 1. Meter should read battery voltage. If OK, go to next step. If not OK, repair open to fuse 9 in fuseblock module.

(3) Check door switch continuity as shown in the applicable charts on the following pages. If OK, go to next step. If not OK, replace switch.

(4) The power lock/unlock relays are in the relay center. The relay center is located on the lower instrument panel reinforcement just right of the steering column (Fig. 1). Remove both relays.

(5) Measure resistance between lock and unlock relay terminal 4 (87A) and ground. Meter should read zero ohms. If OK, go to next step. If not OK, repair open to ground.

(6) Measure voltage at terminal 2 (87) of both the lock and unlock relays. Meter should read battery voltage. If OK, go to next step. If not OK, repair open to fuse 13 in fuseblock module.

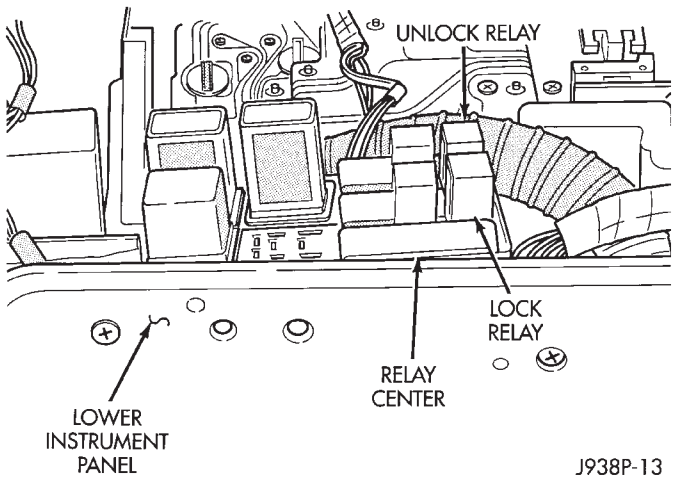

Fig. 1 Power Lock/Unlock Relays

(7) Measure resistance between lock and unlock relay terminal 5 (85) and ground. Meter should read zero ohms. If OK, go to next step. If not OK, repair open to ground.

(8) Hold driver's side switch in LOCK position. Measure voltage at lock relay terminal 3 (86). Meter should read battery voltage. If OK, go to next step. If not OK, repair open to driver's side switch.

(9) Hold driver's side switch in UNLOCK position. Measure voltage at unlock relay terminal 3 (86). Meter should read battery voltage. If OK, go to next step. If not OK, repair open to driver's side switch.

(10) Hold driver's side switch in LOCK position. Measure voltage at lock relay terminal 1 (30). Meter should read battery voltage. If OK, go to next step. If not OK, replace lock relay.

(11) Hold driver's side switch in UNLOCK position. Measure voltage at unlock relay terminal 1 (30). Meter should read battery voltage. If OK, see Power Lock Motor diagnosis. If not OK, replace unlock relay.

DRIVER'S POWER LOCK SWITCH—2-DOOR (LHD)

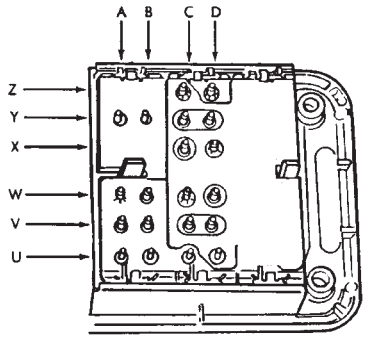

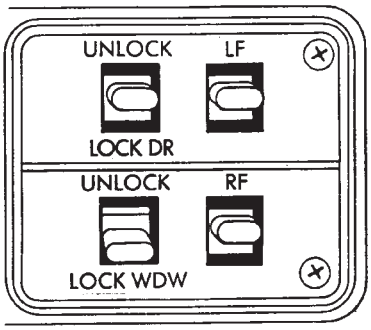

SWITCH DIAGRAM

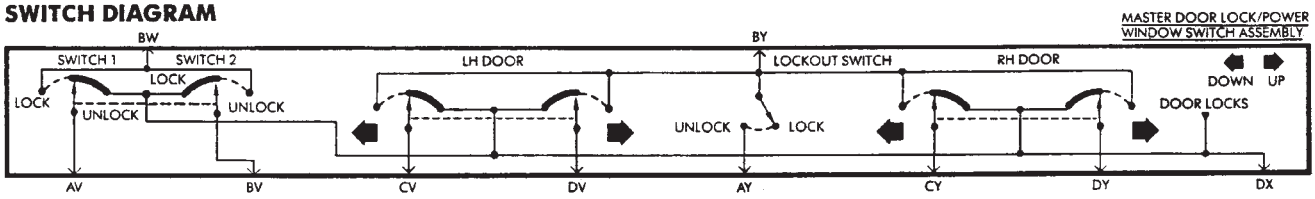

SWITCH TEST
Switch Grounds

SWITCH POSITION	TERMINALS	ZERO OHMS
Off (Normal)	DX and: AV, BV, CV DV, CY, DY	Yes
	BW and DX	No
	BY and DX	No

SWITCH TEST

SWITCH POSITION	TERMINALS	ZERO OHMS
Unlock	BW and BV	Yes
Lock	BW and AV	Yes

J948P-4

DRIVER'S POWER LOCK SWITCH—2-DOOR (RHD)

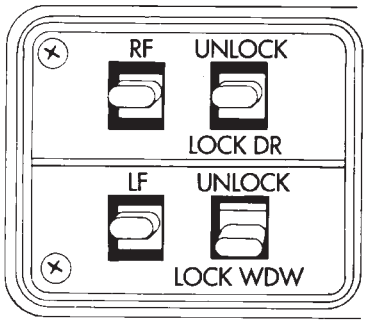

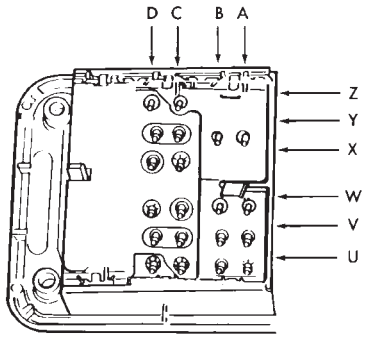

SWITCH DIAGRAM

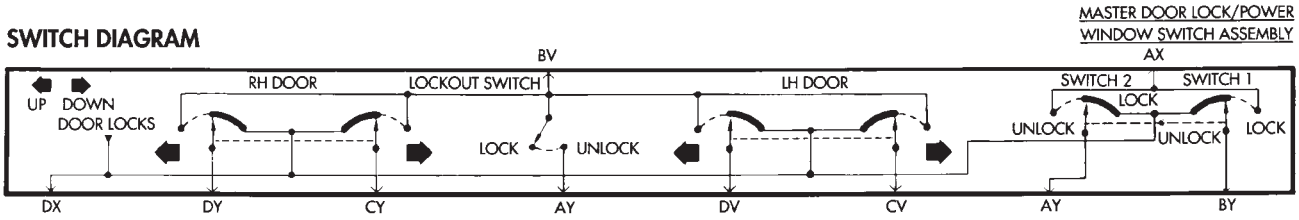

SWITCH TEST
Switch Grounds

SWITCH POSITION	TERMINALS	ZERO OHMS
Off (Normal)	DX and: AV, BV, CV DV, CY, DY	Yes
	BW and DX	No
	BY and DX	No

SWITCH TEST

SWITCH POSITION	TERMINALS	ZERO OHMS
Unlock	AX and AY	Yes
Lock	AX and BY	Yes

J948P-7

DRIVER'S POWER LOCK SWITCH—4-DOOR

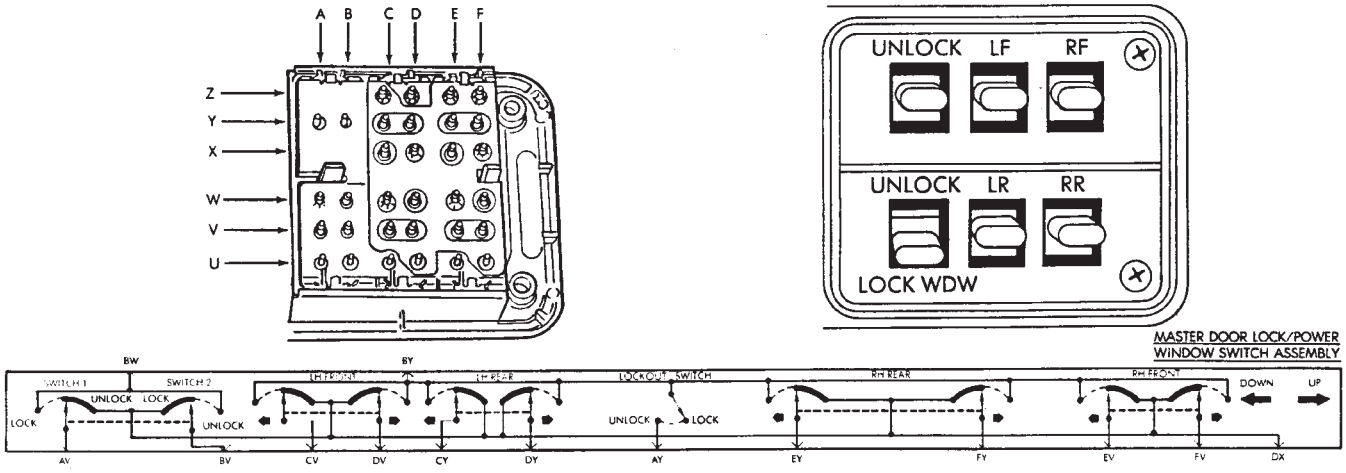

SWITCH TEST
Switch Grounds

SWITCH POSITION	TERMINALS	ZERO OHMS
Off (Normal)	DX and: AV, BV, CV, DV, CY, DY, EY, FY, EV, FV	Yes
	BW and DX	No
	BY and DX	No

SWITCH TEST

SWITCH POSITION	TERMINALS	ZERO OHMS
Unlock	BW and BV	Yes
Lock	BW and AV	Yes

J948P-5

PASSENGER'S POWER LOCK SWITCH

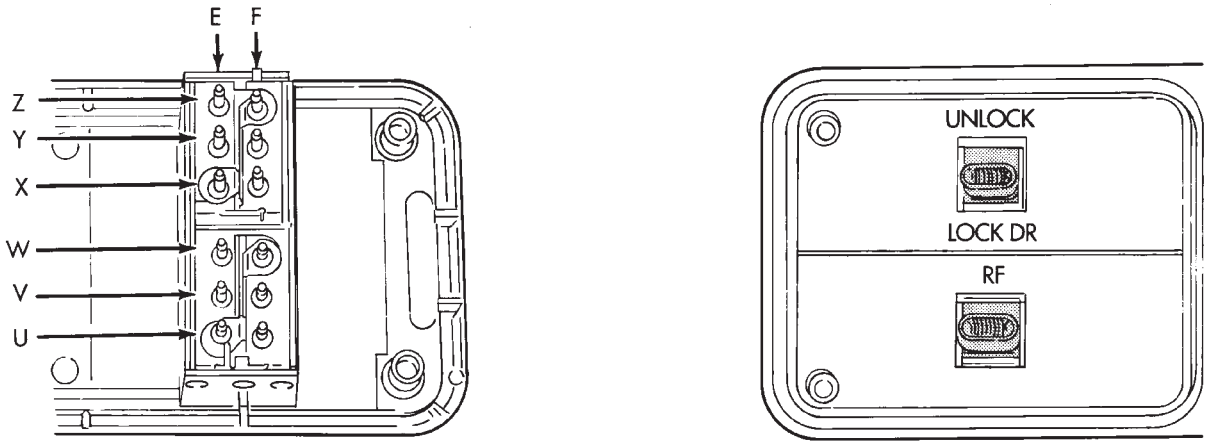

SWITCH DIAGRAM

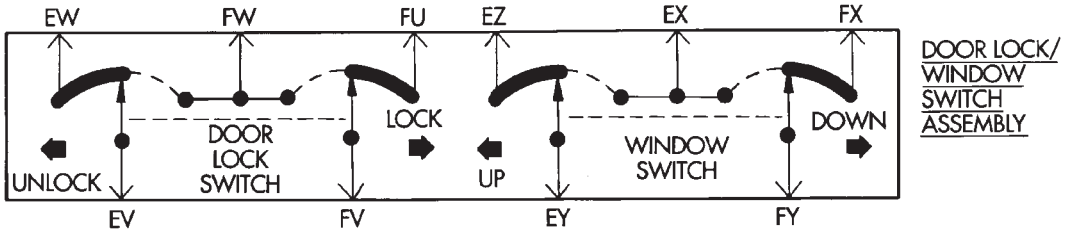

SWITCH TEST
Lock Switch

SWITCH POSITION	TERMINALS	ZERO OHMS
Off (Normal)	EW and EV	Yes
	FU and FV	Yes
	All Others	No
Unlock	EW and EV	Yes
	FW and FV	Yes
	All Others	No
Lock	FU and FV	Yes
	FW and EV	Yes
	All Others	No

J948P-6

POWER LOCK MOTOR

(1) Once it is determined which lock motor is inoperative, that motor can be tested. Disconnect the wire connector at the motor. Apply 12 volts to the motor terminals to check its operation in one direction. Reverse the polarity to check the operation in the other direction. If OK, repair circuits to power lock/unlock relays as required. If not OK, replace the motor.

(2) If all lock motors are inoperative, the problem may be caused by one shorted motor. Disconnecting a shorted motor will allow the good motors to operate. Disconnect each motor connector, one at a time, and re-check both lock and unlock functions while operating the door lock switch. If disconnecting one motor causes the other motors to become functional, go back to step 1 to test the disconnected motor.

KEYLESS ENTRY TRANSMITTER

(1) Depress either transmitter button and note whether red Light-Emitting Diode (LED) on transmitter case lights. If OK, go to next step. If not OK, replace batteries as described under Keyless Entry Transmitter in Service Procedures. Test transmitter operation. If OK, discard faulty batteries. If not OK, go to next step.

(2) Perform transmitter program procedure with suspect transmitter and another known good transmitter, as described in Service Procedures. Test operation with both transmitters. If both transmitters fail to operate power locks, see Keyless Entry Module diagnosis. If known good transmitter operates power locks and suspect transmitter does not, replace faulty transmitter. Be certain to perform transmitter program procedure again when replacing faulty transmitter and to erase test transmitter access code from keyless entry module.

KEYLESS ENTRY MODULE

(1) Check fuse 9 in fuseblock module. If OK, go to next step. If not OK, replace fuse.

(2) Check for battery voltage at fuse 9. If OK, go to next step. If not OK, repair circuit from power distribution center.

(3) Access keyless entry module connectors as described in Keyless Entry Module Remove/Install.

(4) Unplug module connector from module. Check connector and receptacle in module for loose, corroded, or damaged terminals and pins. If OK, go to next step. If not OK, repair as required.

(5) Probe connector cavity for module terminal 1 and check for battery voltage. If OK, go to next step. If not OK, repair circuit to fuse 9 as required.

(6) Install a jumper wire from connector cavity for module terminal 1 to connector cavity for module terminal 3. Doors should lock. If OK, go to step 8. If not OK, go to next step.

(7) Check for continuity between connector cavity for module terminal 3 and lock relay terminal 3 (86). There should be continuity. If OK, replace lock relay. If not OK, repair circuit as required.

(8) Install a jumper wire from connector cavity for module terminal 1 to connector cavity for module terminal 4. Doors should unlock. If OK, replace module. If not OK, go to next step.

(9) Check for continuity between connector cavity for module terminal 4 and unlock relay terminal 3 (86). There should be continuity. If OK, replace unlock relay. If not OK, repair circuit as required.

SERVICE PROCEDURES

KEYLESS ENTRY TRANSMITTER

To replace transmitter batteries, separate transmitter case by prying gently with a trim stick or other wide flat-bladed tool at center seam (Fig. 2). Case snaps open and shut. Replace with CR1616 3-volt batteries or equivalent (Fig. 3).

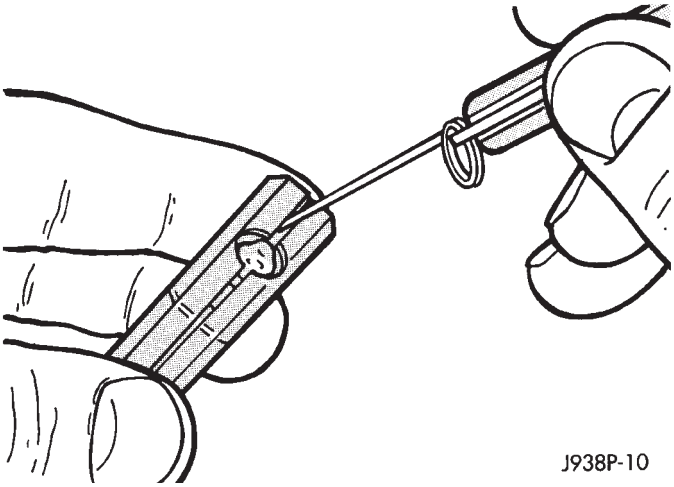

Fig. 2 Separate Transmitter Halves

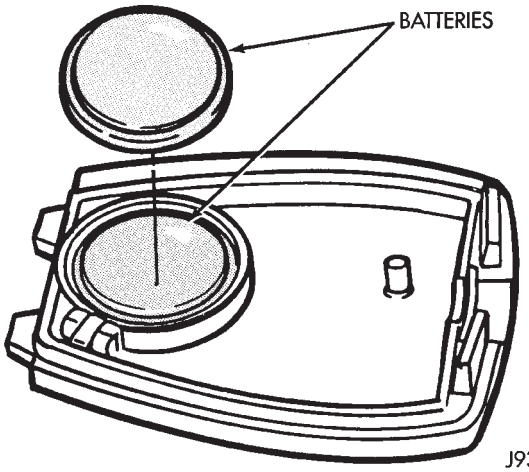

Fig. 3 Battery Install

TRANSMITTER PROGRAMMING PROCEDURE

(1) Open the driver's door of the vehicle. Leave it open through the programming procedure.

(2) Move the mechanical door lock lever to the LOCK position.

(3) Turn the ignition switch to the ON position.

(4) Within 20 seconds, aim a transmitter at the keyless entry module receiver dome and press the LOCK button for at least 5 seconds. Once the module accepts the programming code, the driver's door will unlock.

(5) Once the first transmitter has been programmed, additional transmitters (up to 4) may be programmed into the module. Within 20 seconds of the previous transmitter programming, move the mechanical door lock lever to the LOCK position. Aim another transmitter at the receiver dome and press the LOCK button for at least 5 seconds. The door lock will cycle again.

(6) To lock the programmed codes into the module, the ignition switch must be turned OFF and back ON within 20 seconds after programming the last transmitter's code. At that time, all previous codes are erased from the module.

POWER LOCK SWITCH REMOVE/INSTALL

(1) Remove the interior door latch release assembly and control panel retaining screws (Fig. 4).

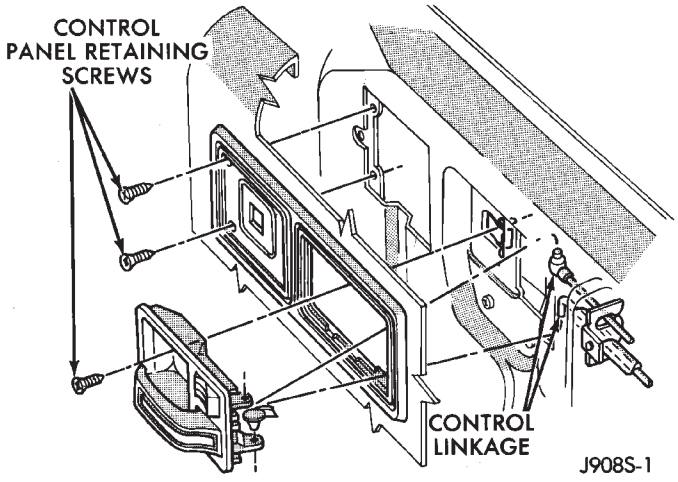

Fig. 4 Power Window/Lock Control Panel Remove/ Install

(2) Disconnect the control linkage and the wire harness connector.

(3) Remove the latch release and control panel assembly.

(4) The switch is retained to the panel with clips (Fig. 5). Push in on the retainer part of the clip and pry the clips.

(5) To install switch, position switch and press in retainer clips until they snap into position. Reverse remaining removal procedures to complete installation.

POWER LOCK MOTOR REMOVE/INSTALL

DOORS

(1) Remove interior door latch release assembly and control panel retaining screws (Fig. 4).

(2) Disconnect control linkage and wire harness connector.

(3) Remove latch release and control panel assembly.

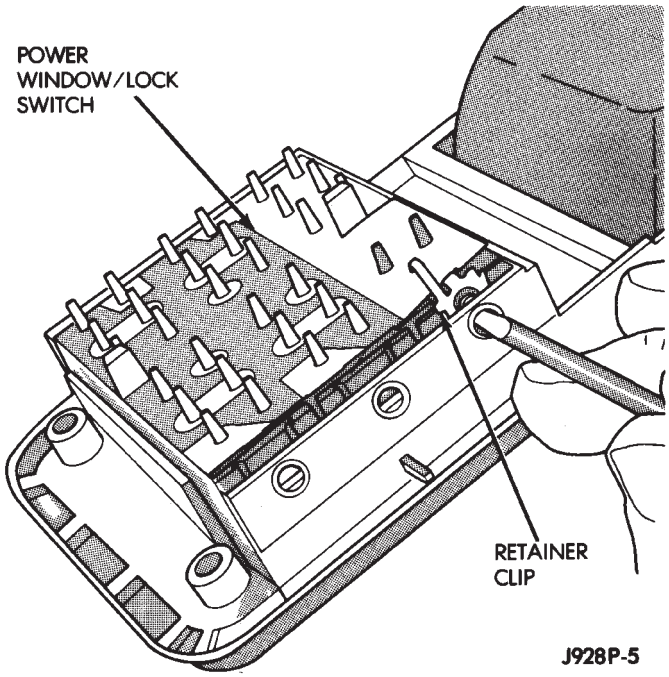

Fig. 5 Power Lock Switch Remove

(4) Remove armrest lower retaining screws.

(5) Swing armrest downward to a vertical position. This is necessary to disconnect armrest from upper retainer clip (Fig. 6).

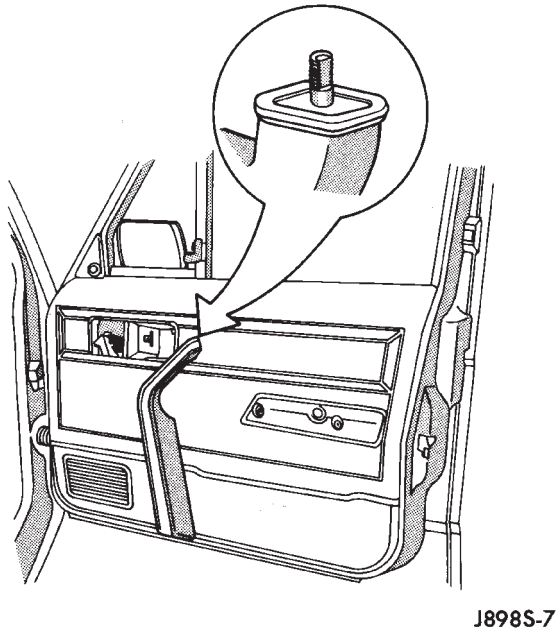

Fig. 6 Armrest Retainer Clip

(6) Pull armrest straight out from trim panel.

(7) Remove trim panel with a wide flat-bladed tool (Fig. 7).

To aid in removal of trim panel, start at bottom of panel.

(8) Remove plastic water dam sheet.

(9) Remove latch retaining screws (Fig. 8).

(10) Grind out or drill out the lock motor rivets and remove motor with latch assembly and remote control rods (Fig. 9).

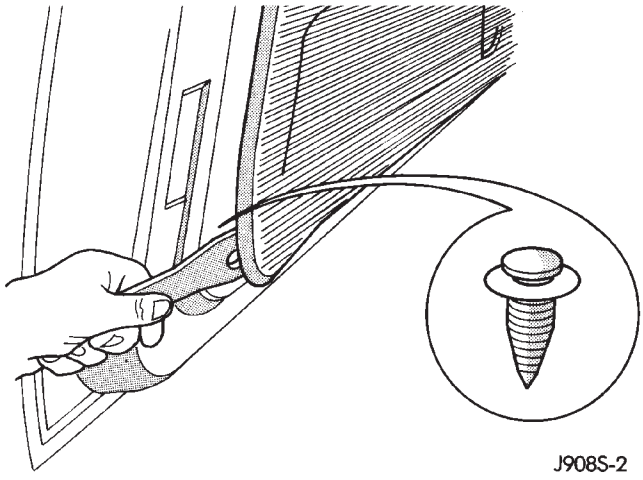

Fig. 7 Trim Panel Remove

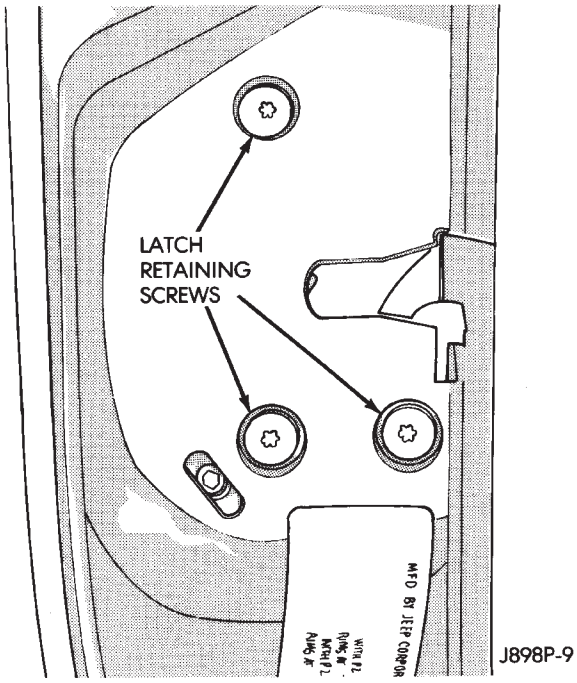

Fig. 8 Latch Remove/Install

(11) Reverse removal procedures to install. Use new rivets or nuts and screws to install motor. Tighten latch screws to 9 N·m (7 ft. lbs.). Use an adhesive/sealant to re-install water dam sheet.

LIFTGATE

(1) Remove 2 screws at the top outside edges of the liftgate trim panel.

(2) Remove trim panel with a wide flat-bladed tool (Fig. 10).

To aid in removal of trim panel, start at bottom of panel.

(3) Disconnect lock actuator linkage clip (Fig. 11).

(4) Remove 3 latch retaining screws (Fig. 12).

(5) Remove latch.

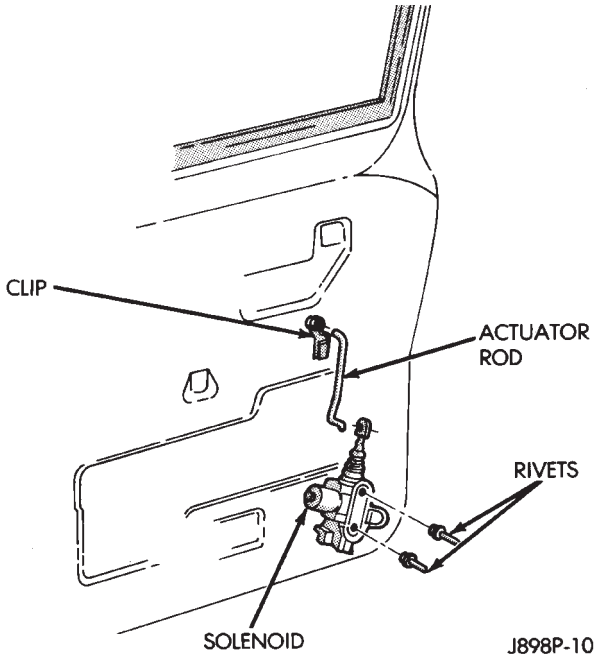

Fig. 9 Motor Remove/Install

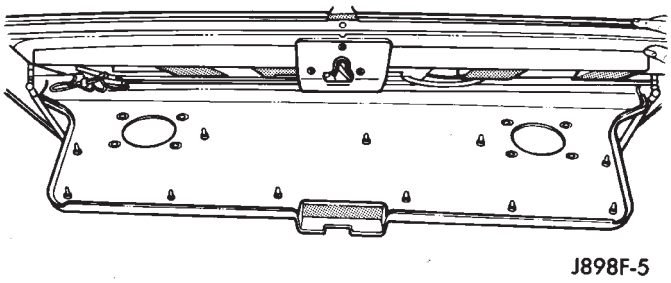

Fig. 10 Liftgate Trim Panel Remove/Install

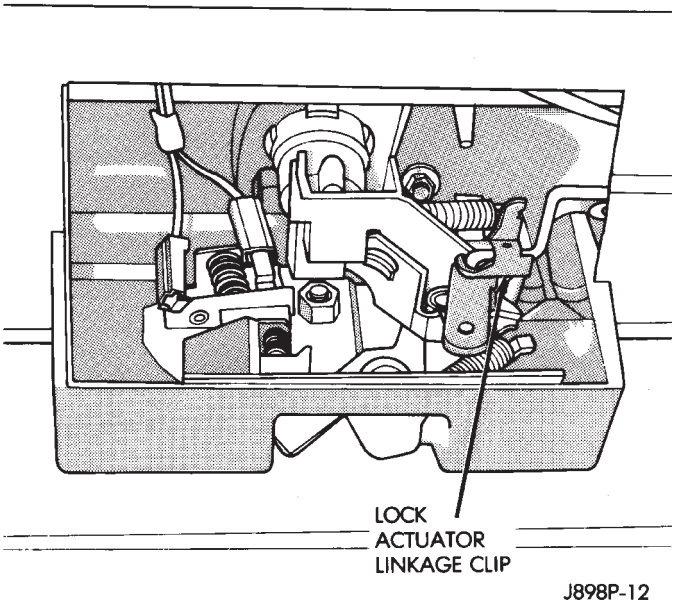

Fig. 11 Lock Actuator Linkage Clip

(6) Drill out 2 rivets and remove motor.

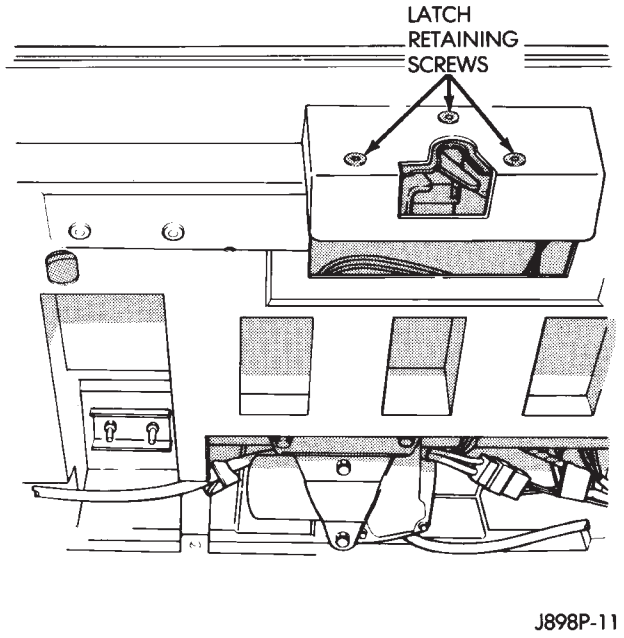

Fig. 12 Latch Assembly Remove/Install

(7) Reverse removal procedures to install. Tighten latch screws to 9 N·m (7 ft. lbs.).

KEYLESS ENTRY MODULE REMOVE/INSTALL

WITHOUT OVERHEAD CONSOLE

(1) Remove 2 screws attaching receiver housing to headlining (Fig. 13).

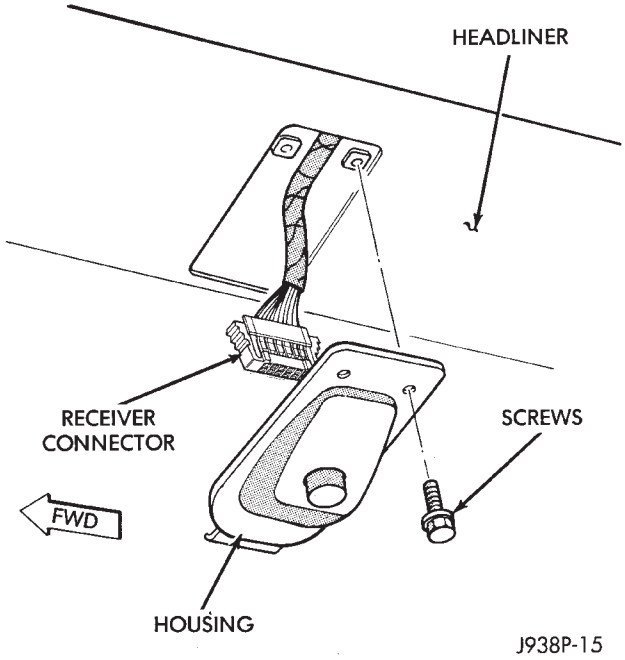

Fig. 13 Remove/Install Keyless Entry Housing

(2) Pull housing toward rear of vehicle to disengage clip.
(3) Disconnect module harness connector.
(4) Remove circuit board from housing.

(5) Reverse removal procedures to install.

WITH OVERHEAD CONSOLE

(1) Remove screw forward of compass unit (Fig. 14).

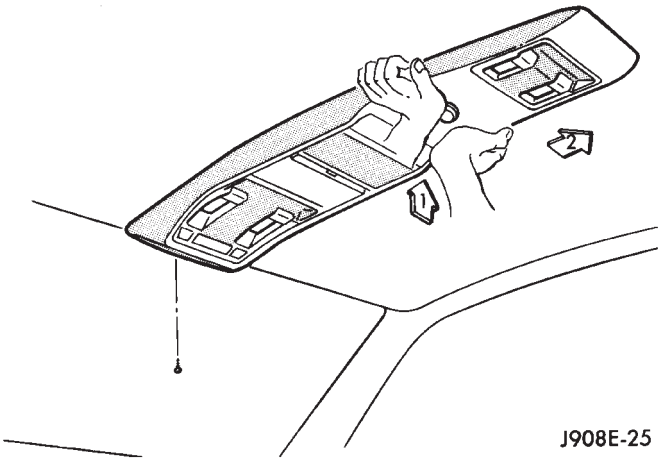

Fig. 14 Remove/Install Overhead Console

(2) Flex housing outward while pressing upward to disengage housing from the rear bracket (arrow 1) (Fig. 14).

(3) Slide console rearward until the console detaches from the front mounting bracket (arrow 2) (Fig. 14).

(4) While pressing up on rear of console (arrow 1), slide console forward holding front away from headliner (arrow 2). Move console forward until the rear detaches from headliner and becomes free (Fig. 15).

(5) Disconnect wire harnesses from keyless entry

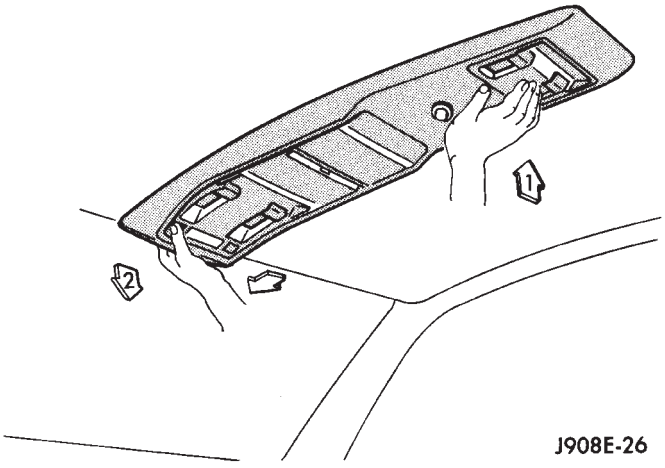

Fig. 15 Remove/Install Overhead Console

and compass (Figs. 16 and 17).

(6) Pinch forward area of receiver cover and release clips. Slide cover out from under rib (Fig. 18).

(7) Remove screw and printed circuit board.

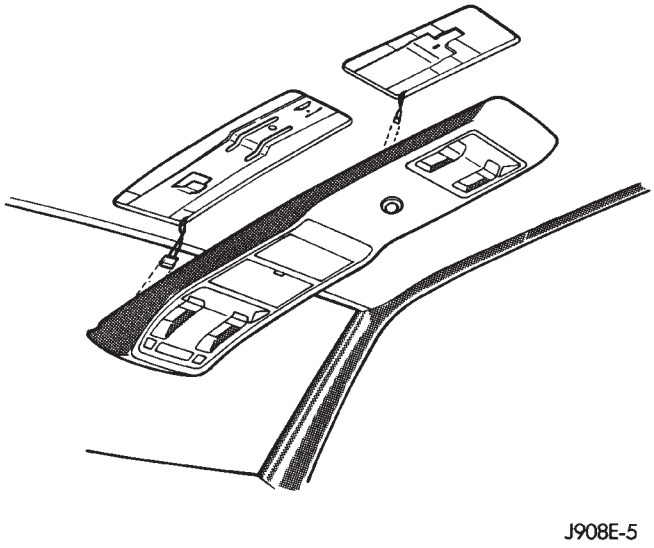

Fig. 16 Disconnect Wire Harnesses

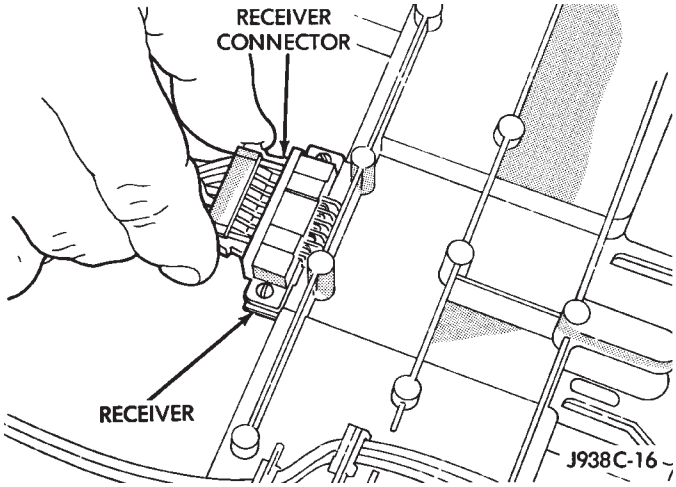

Fig. 17 Keyless Entry Harness Connector

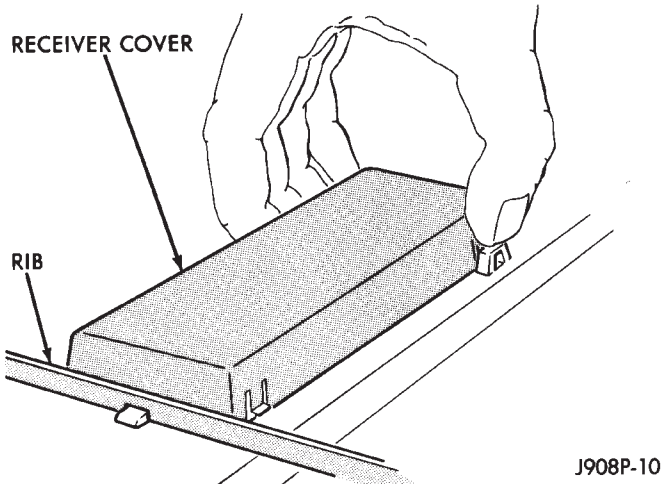

Fig. 18 Keyless Entry Receiver Cover Remove/ Install

(8) Reverse removal procedures to install. Be sure to flex housing outward near the keyless entry module until the console snaps onto the rear mounting bracket.

POWER LOCK/UNLOCK RELAY REMOVE/INSTALL

The power lock/unlock relays are located in the relay center. The relay center is located on the lower instrument panel trim cover just right of the steering column (Fig. 19).

(1) Remove the appropriate relay from the relay center.

(2) Reverse removal procedure to install.

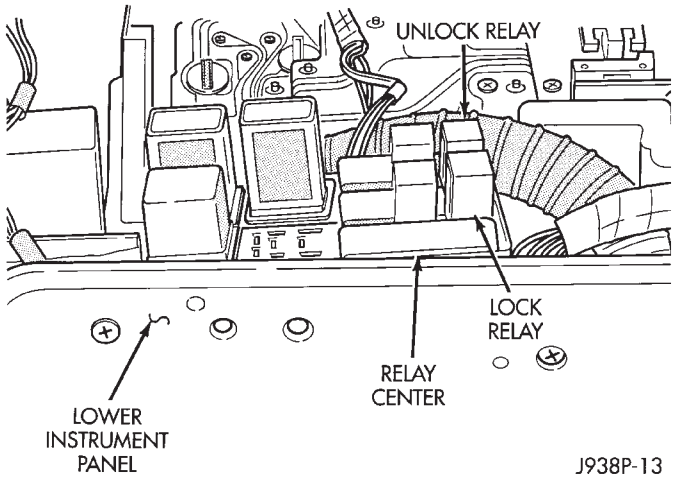

Fig. 19 Power Lock/Unlock Relays

POWER SEATS

CONTENTS

	page		page
DIAGNOSIS	2	SERVICE PROCEDURES	3
GENERAL INFORMATION	1		

GENERAL INFORMATION

A six-way driver's side power seat is an available option on XJ (Cherokee) models. The power seat system receives battery feed through fuse 6 in the power distribution center and circuit breaker 16 in the fuse-block module at all times.

Following are general descriptions of the major components in the power seat system. Refer to Group 8W - Wiring Diagrams for complete circuit descriptions and diagrams.

POWER SEAT SWITCH

The power seat can be adjusted in six different ways using the power seat switch (Fig. 1). The switch is located on the lower outboard side of the seat cushion. Refer to the owner's manual for more information on power seat switch functions and seat adjusting procedures. The individual switches cannot be repaired. If one switch fails, the entire switch module must be replaced.

POWER SEAT ADJUSTER/MOTORS

There are three reversible motors that operate the power seat adjuster. The motors are connected to worm-drive gearboxes in the adjuster by drive cables.

The front and rear of a seat are operated by different motors. They can be raised or lowered independently of each other. When the center seat switch is pushed to the UP or DOWN position, both front and rear motors operate in unison, moving the entire seat up or down. The forward-rearward motor is operated by pushing the center seat switch to the FORWARD or REARWARD position.

When a switch is actuated, battery feed and a ground path are applied through the switch contacts to the motor(s). The motor(s) operate to move the seat in the selected direction until the switch is released, or until the travel limit of the power seat adjuster is reached. When the switch is moved in the opposite direction, the battery feed and ground path to the motor(s) are reversed through the switch contacts. This causes the motor to run in the opposite direction.

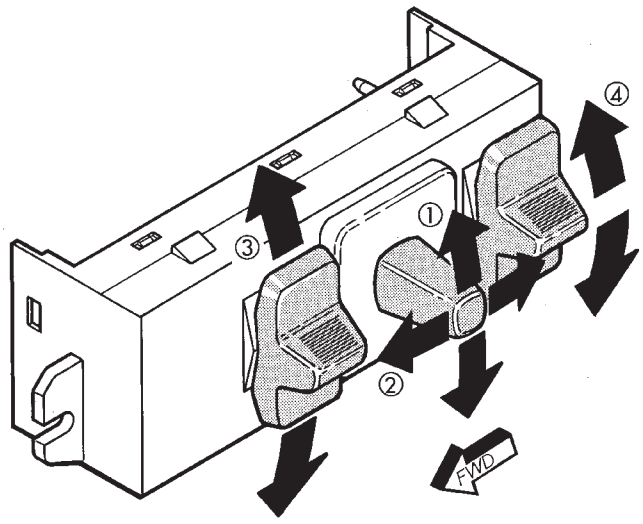

Fig. 1 Power Seat Switch

Each motor contains a self-resetting circuit breaker to protect it from overload. Consecutive or frequent resetting must not be allowed to continue or the motors may be damaged. Make the necessary repairs.

The power seat adjuster and motors can not be repaired, and are serviced only as a complete unit. If any component in this unit should fail, the entire assembly must be replaced.

DIAGNOSIS

Before any testing is attempted the battery should be fully charged and all connections and pins cleaned and tightened to ensure proper continuity and grounds.

With the dome lamp on, apply switch in direction of the failure. If the dome lamp dims, the seat may be jamming. Check for binding or obstructions. If the dome lamp does not dim, then proceed with the following electrical tests.

POWER SEAT ADJUSTER/MOTORS

Operate the power seat switch to move all three seat motors. The seat should move in all directions. If not OK, proceed as follows. If one or more motors operate, see diagnosis for Power Seat Switch.

(1) Check circuit breaker 16 in the fuseblock module. If OK, go to next step. If not OK, replace circuit breaker.

(2) Remove switch mounting screws and check for battery voltage at red wire at switch connector. If OK, go to next step. If not OK, repair wiring to circuit breaker.

(3) Check for continuity between black wire at switch connector and a good ground. There should be continuity. If OK, go to next step. If not OK, repair wiring to ground.

(4) See diagnosis for Power Seat Switch. If switch continuity checks OK, replace faulty motor/adjuster assembly. If switch continuity is not OK, replace faulty switch.

POWER SEAT SWITCH

To check the power seat switch, remove the switch from its mounting position. Use an ohmmeter and see the Power Seat Switch Continuity chart. Determine if switch continuity is correct. If OK, see Power Seat Adjuster/Motors diagnosis. If not OK, replace faulty switch assembly.

POWER SEAT SWITCH CONTINUITY

SWITCH POSITION	CONTINUITY BETWEEN
OFF	B-N, B-J, B-M, B-E, B-L, B-K
VERTICAL UP	A-E, A-M, B-N, B-J
VERTICAL DOWN	A-J, A-N, B-M, B-E
HORIZONTAL FORWARD	A-L, B-K
HORIZONTAL AFT	A-K, B-L
FRONT TILT UP	A-M, B-N
FRONT TILT DOWN	A-N, B-M
REAR TILT UP	A-E, B-J
REAR TILT DOWN	A-J, B-E

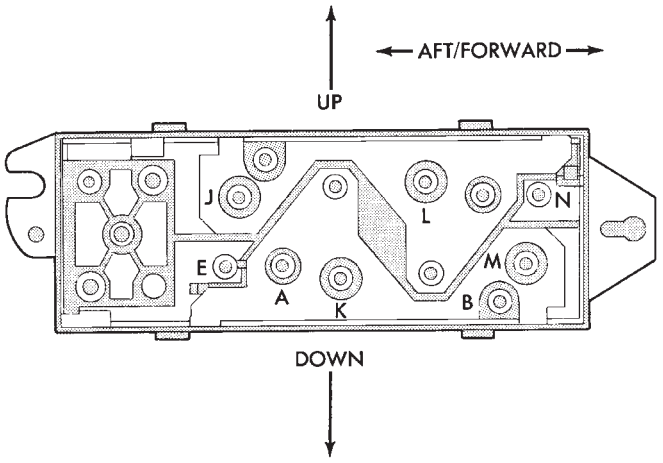

TERMINALS SHOWN AS VIEWED FROM REAR OF SWITCH

908R-4

SERVICE PROCEDURES

POWER SEAT SWITCH REMOVE/INSTALL

(1) Disconnect battery negative cable.

(2) Reach under seat and release switch and bezel retainer snap clips (Fig. 2), while pulling gently on switch and bezel assembly.

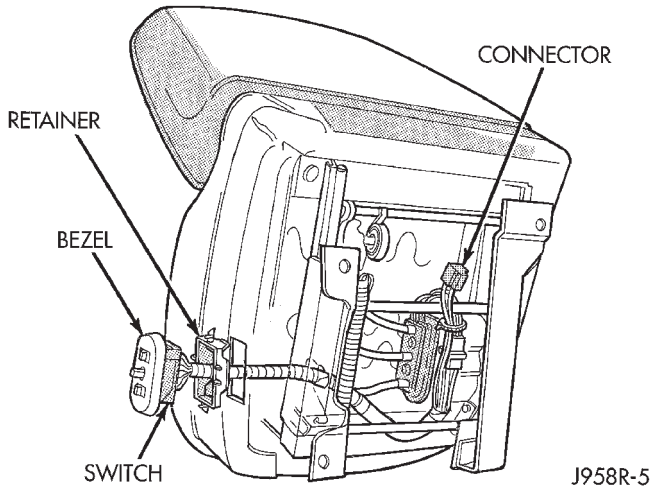

Fig. 2 Power Seat Switch Remove/Install

(3) Pull switch, bezel, and retainer out from seat frame far enough to access multiple terminal block. Carefully release locking tabs and separate switch retainer and switch bezel from switch body.

(4) Carefully release locking tabs securing multiple terminal block to switch and remove switch.

(5) Reverse removal procedures to install.

POWER SEAT ADJUSTER/MOTORS REMOVE/ INSTALL

(1) Disconnect battery negative cable.

(2) Remove 4 bolts securing seat adjuster to floor (Fig. 3).

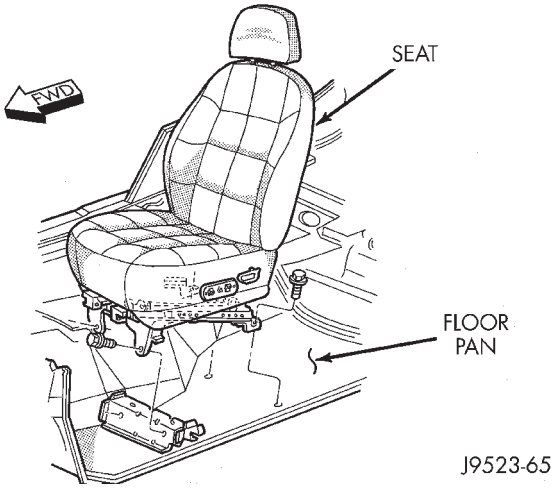

Fig. 3 Power Seat Adjuster Remove/Install

(3) Disconnect power seat feed wiring connector.

(4) Remove 4 bolts securing power seat adjuster/ motor assembly to seat cushion frame.

(5) Disconnect wiring from power seat switch to power seat motors and remove power seat adjuster/ motor assembly.

(6) Reverse removal procedures to install. Tighten seat mounting hardware to 34 N·m (25 ft. lbs.) torque.

POWER WINDOWS

CONTENTS

	page		page
DIAGNOSIS	1	SERVICE PROCEDURES	7
GENERAL INFORMATION	1		

GENERAL INFORMATION

Power door windows are optional equipment on XJ (Cherokee) models. The power windows operate only with the ignition switch in the ON position. This group covers diagnosis and service of the electrical components peculiar to the power window system. For service of mechanical components such as the regulator, lift plate or window tracks refer to Group 23 - Body Components.

Following are general descriptions of the major components in the power window system. Refer to Group 8W - Wiring Diagrams for complete circuit descriptions and diagrams.

POWER WINDOW SWITCH

Both front and rear door windows can be raised or lowered electrically by operating the four two-way switches on the driver's door panel. A single two-way switch on each passenger's door panel operates only the window on that passenger's door. The switches cannot be repaired. If faulty, they must be replaced.

POWER WINDOW MOTOR

A permanent magnet reversible motor moves the window regulator through a cable and drum operating mechanism. A positive and negative battery connection to the two motor terminals will cause the motor to rotate in one direction. Reversing current through these same two connections will cause the motor to rotate in the opposite direction. In addition, each power window motor is equipped with an integral automatic re-setting circuit breaker to protect the motor from overloads. The power window motor and regulator assembly cannot be repaired. If faulty, the entire assembly must be replaced.

CIRCUIT BREAKER

An automatic re-setting circuit breaker in the fuseblock module is used to protect the power window system circuit. The circuit breaker can protect the system from a short circuit, and can also protect the system from an overload condition caused by an obstructed or stuck window glass or regulator. The circuit breaker can not be repaired. If faulty, it must be replaced.

DIAGNOSIS

It is necessary that the window be free to slide up and down for the power window system to function properly. If the window is not free to move up and down, the motor will overload and trip the circuit breaker. To determine if the glass is free, disconnect regulator plate from the glass and slide window up and down by hand.

An alternate method is to shake the glass in the door, with the glass positioned between the up and down stop positions. Check that the glass can be moved slightly from side to side, front to rear, and up and down. Then check that window is not bound tight in the tracks. If window is free, proceed with diagnosis that follows. If window is not free, refer to Group 23 - Body Components for service procedures.

CIRCUIT BREAKER

Locate correct circuit breaker in fuseblock module. Pull out slightly, but be sure that circuit breaker terminals still contact terminals in fuseblock module. Turn ignition switch to ON position. Connect ground wire of voltmeter to a good ground. With probe of voltmeter positive lead, check both terminals of circuit breaker for battery voltage. If only one terminal

has battery voltage, circuit breaker is faulty and must be replaced. If neither terminal has battery voltage, repair circuit from ignition switch as required.

POWER WINDOW SWITCH

Before you proceed with this diagnosis, confirm proper circuit breaker operation. See Circuit Breaker diagnosis.

(1) Remove switch from door trim panel. See Power Window Switch Remove/Install. Carefully separate multiple terminal block on wiring harness from switch body.

(2) Check for continuity between connector cavity for switch pin DX and a good ground. See switch continuity charts for pin identification. There should be continuity. If OK, go to next step. If not OK, repair ground circuit as required.

(3) Turn ignition switch to ON position. Check for battery voltage at connector cavity for switch pin BY. If OK, go to next step. If not OK, repair wiring to circuit breaker as required.

(4) Test switch continuity. See switch continuity charts to determine if continuity is correct in the OFF, LOCK, UP and DOWN switch positions. If OK, go to Power Window Motor diagnosis. If not OK, replace the switch.

POWER WINDOW MOTOR

Before you proceed with this diagnosis, confirm proper switch operation. See Power Window Switch diagnosis.

(1) Remove door trim panel (see Power Window Motor Remove/Install).

(2) Disconnect motor connector. Apply 12 volts across the motor terminals to check its operation in one direction. Reverse the polarity to check the operation in the other direction. Remember, if window is in the full up or down position the motor will not operate in that direction by design. If OK, repair wire harness from the motor to the switch as required. If not OK, replace the motor.

(3) If motor operates in both directions, check operation through its complete up and down travel. If not OK, refer to Group 23 - Body Components to check window glass, tracks, and regulator for sticking, binding or improper adjustment.

DRIVER'S POWER WINDOW SWITCH—4-DOOR

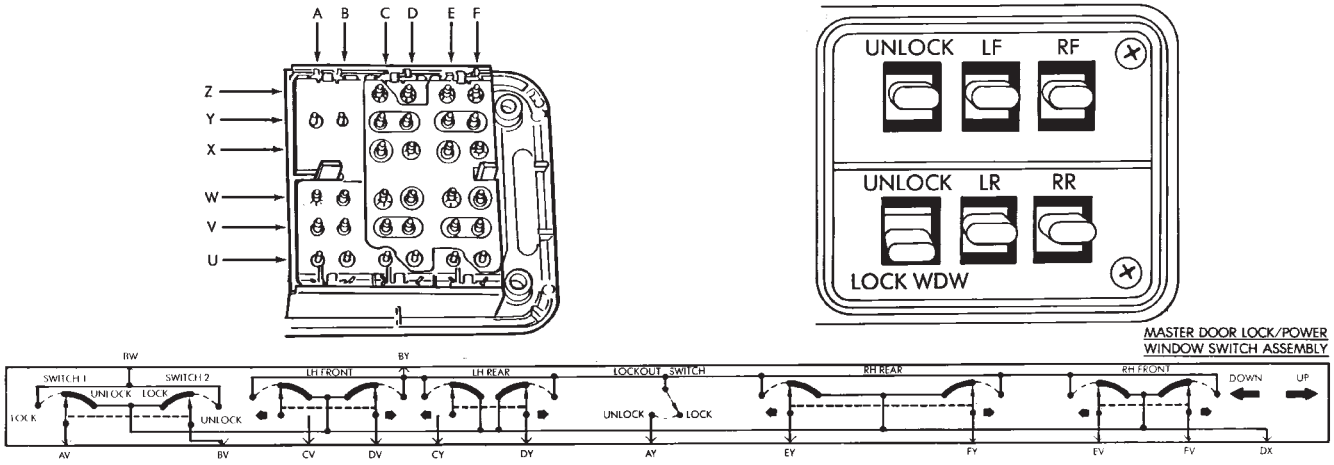

SWITCH TEST
Switch Grounds

SWITCH POSITION	TERMINALS	ZERO OHMS
Off (Normal)	DX and: AV, BV, CV, DV, CY, DY, EY, FY, EV, FV	Yes
	BW and DX	No
	BY and DX	No

SWITCH TEST
LH Front

SWITCH POSITION	TERMINALS	ZERO OHMS
Up	BY and DV	Yes
Down	BY and CV	Yes

SWITCH TEST
LH Rear

SWITCH POSITION	TERMINALS	ZERO OHMS
Up	BY and DY	Yes
Down	BY and CY	Yes

SWITCH TEST
Lockout Switch

SWITCH POSITION	TERMINALS	ZERO OHMS
Up (Unlock)	AY and BY	Yes
Down (Lock)	AY and BY	No

SWITCH TEST
RH Rear

SWITCH POSITION	TERMINALS	ZERO OHMS
Up	BY and FY	Yes
Down	BY and EY	Yes

SWITCH TEST
RH Front

SWITCH POSITION	TERMINALS	ZERO OHMS
Up	BY and FV	Yes
Down	BY and EV	Yes

J928S-3

DRIVER'S POWER WINDOW SWITCH—2-DOOR (LHD)

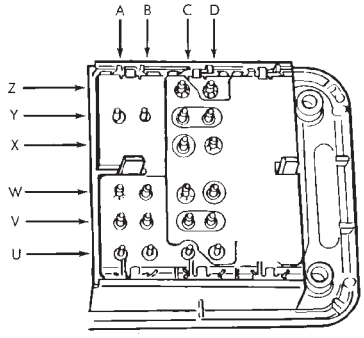

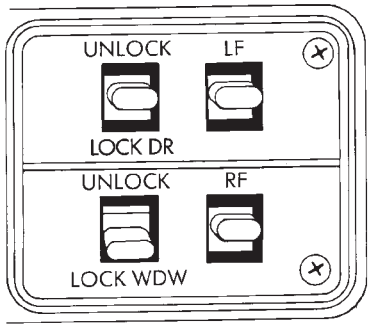

SWITCH DIAGRAM

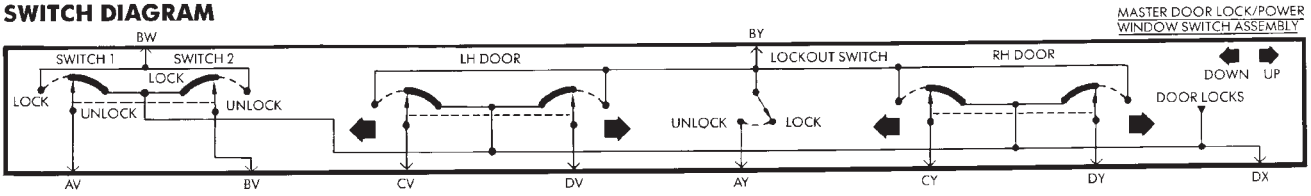

SWITCH TEST
Switch Grounds

SWITCH POSITION	TERMINALS	ZERO OHMS
Off (Normal)	DX and: AV, BV, CV DV, CY, DY	Yes
	BW and DX	No
	BY and DX	No

SWITCH TEST
LH Door

SWITCH POSITION	TERMINALS	ZERO OHMS
Up	BY and DV	Yes
Down	BY and CV	Yes

SWITCH TEST
RH Door

SWITCH POSITION	TERMINALS	ZERO OHMS
Up	BY and DY	Yes
Down	BY and CY	Yes

SWITCH TEST
Lockout Switch

SWITCH POSITION	TERMINALS	ZERO OHMS
Up (Unlock)	AY and BY	Yes
Down (Lock)	AY and BY	No

J938S-9

DRIVER'S POWER WINDOW SWITCH—2-DOOR (RHD)

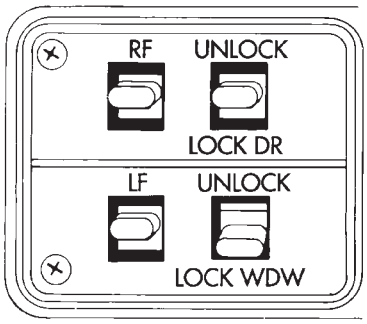

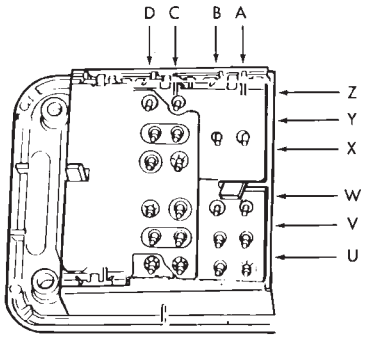

SWITCH DIAGRAM

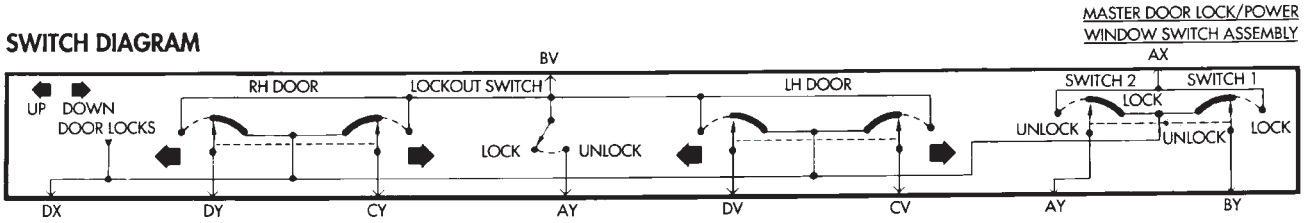

SWITCH TEST
Switch Grounds

SWITCH POSITION	TERMINALS	ZERO OHMS
Off (Normal)	DX and: BY, AY, CV DV, CY, DY	Yes
	AX and DX	No
	BV and DX	No

SWITCH TEST
LH Door

SWITCH POSITION	TERMINALS	ZERO OHMS
Up	BV and DV	Yes
Down	BV and CV	Yes

SWITCH TEST
RH Door

SWITCH POSITION	TERMINALS	ZERO OHMS
Up	BV and DY	Yes
Down	BV and CY	Yes

SWITCH TEST
Lockout Switch

SWITCH POSITION	TERMINALS	ZERO OHMS
Up (Unlock)	AV and BV	Yes
Down (Lock)	AV and BV	No

J948S-11

PASSENGER'S POWER WINDOW SWITCH

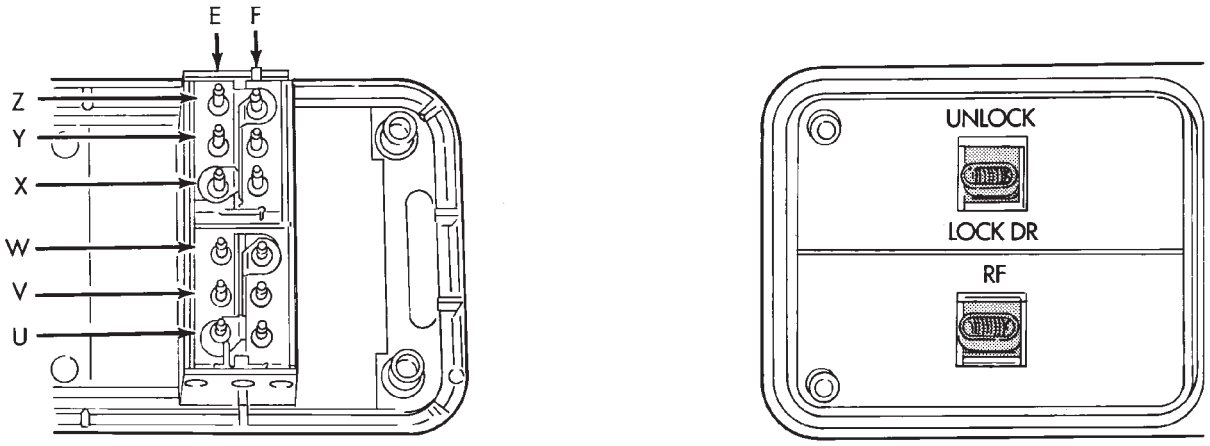

SWITCH DIAGRAM

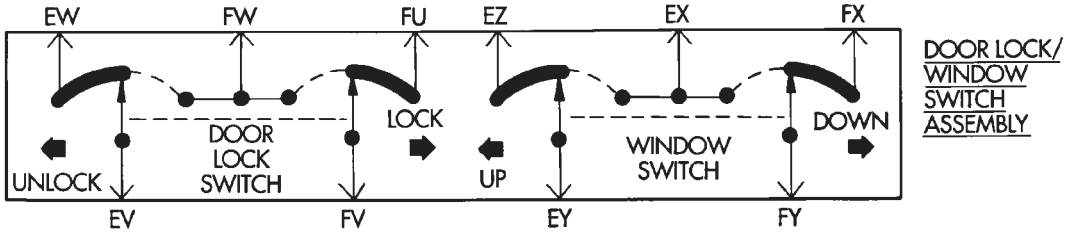

SWITCH TEST
Window Switch

SWITCH POSITION	TERMINALS	ZERO OHMS
Off (Normal)	EY and EZ	Yes
	FY and FX	Yes
	All Others	No
Up	EY and EZ	Yes
	EX and FY	Yes
	All Others	No
Down	EX and EY	Yes
	FX and FY	Yes
	All Others	No

J948S-13

SERVICE PROCEDURES

POWER WINDOW SWITCH REMOVE/INSTALL

(1) Remove the interior door latch release assembly and control panel retaining screws (Fig. 1).

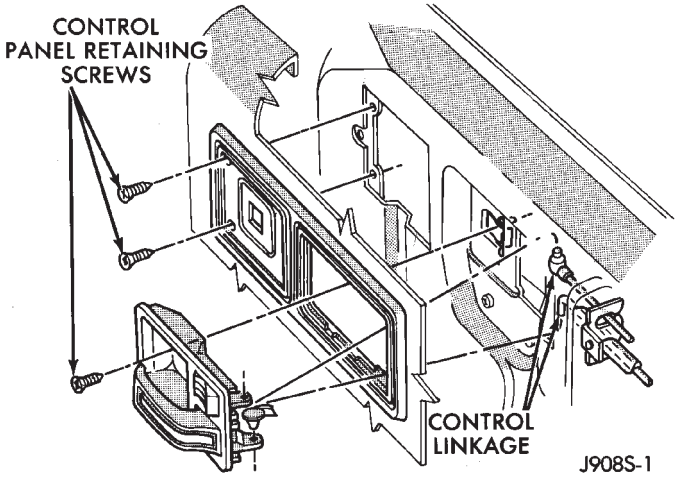

Fig. 1 Power Window/Lock Control Panel Remove/ Install

(2) Disconnect the control linkage and the wire harness connector.

(3) Remove the latch release and control panel assembly.

(4) The switch is retained to the panel with clips (Fig. 2). Push in on the retainer part of the clip and pry the clips.

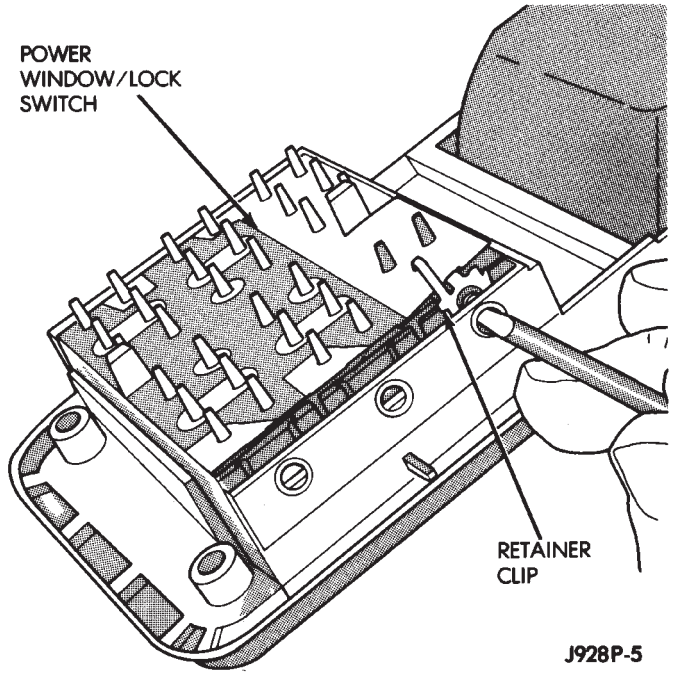

Fig. 2 Power Window Switch Remove

(5) To install switch, position switch and press in retainer clips until they snap into position. Reverse remaining removal procedures to complete installation.

POWER WINDOW MOTOR REMOVE/INSTALL

(1) Remove the interior door latch release assembly and control panel retaining screws (Fig. 1).

(2) Disconnect the control linkage and the wire harness connector.

(3) Remove the latch release and control panel assembly.

(4) Remove the armrest lower retaining screws.

(5) Swing the armrest downward to a vertical position. This is necessary to disconnect the armrest from the upper retainer clip (Fig. 3).

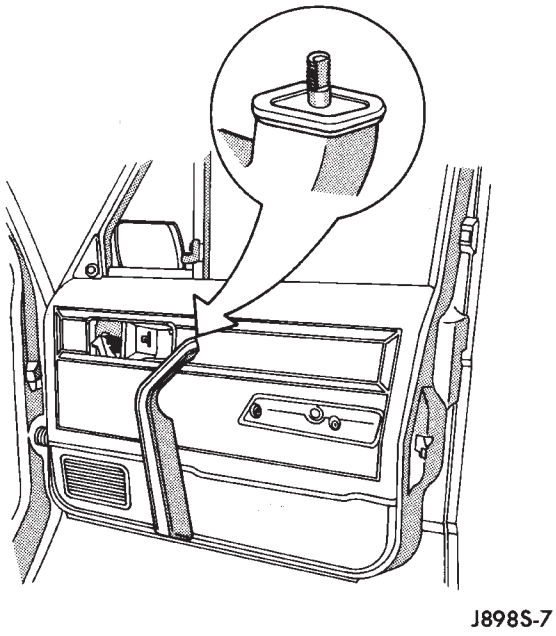

Fig. 3 Armrest Retainer Clip

(6) Pull the armrest straight out from the trim panel.

To aid in removal of the trim panel, start at the bottom of the panel.

(7) Remove the trim panel with a wide flat-bladed tool (Fig. 4).

(8) Remove the plastic water dam sheet.

(9) Grind the heads off 2 rivets holding reinforcement to door (Fig. 5). Knock rivets out with a hammer and punch.

(10) Adjust window to allow access to Torx head screw (Fig. 6).

(11) Remove 2 screws holding bottom of regulator to door.

(12) Remove door glass attaching Torx head screw (Fig. 6).

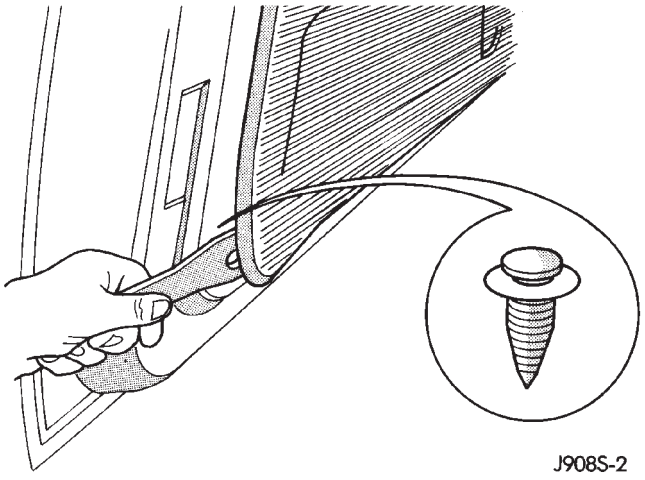

Fig. 4 Trim Panel Remove/Install

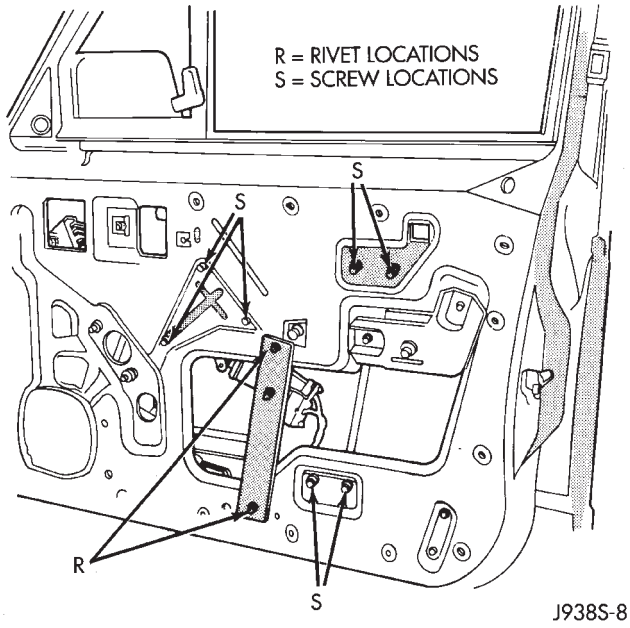

Fig. 5 Window Regulator Remove/Install

(13) Pull glass to the full up position and tape glass to door.

(14) Disconnect wire harness connector from the window regulator.

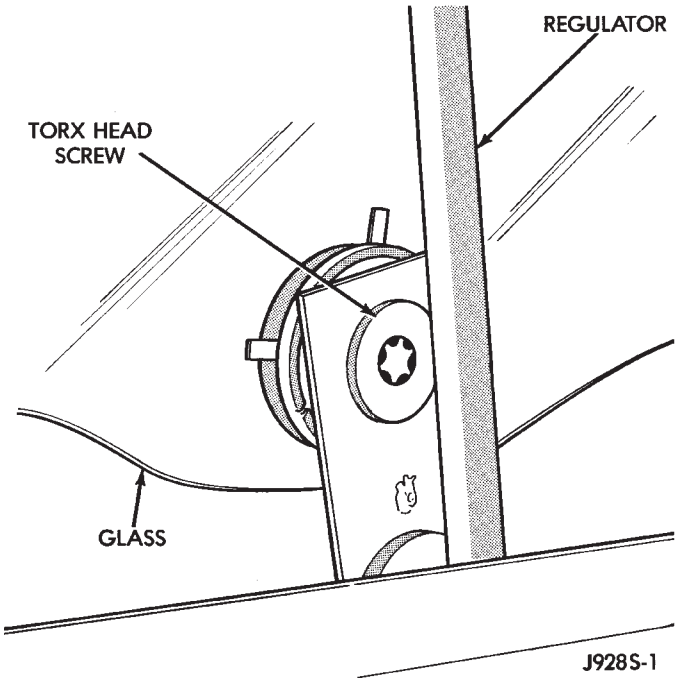

Fig. 6 Remove/Install Glass Attaching Screw

(15) Remove remaining window regulator attaching screws (Fig. 5).

(16) Remove window regulator.

(17) To install, place regulator inside door.

(18) Attach regulator to door using screws or the hardware kit supplied with a new regulator. DO NOT install the 2 screws that hold the bottom of the regulator.

(19) Connect wire harness connector to regulator.

(20) Attach door glass with Torx head screw (Fig. 6). Tighten door glass screw to 3.3 N·m (30 in. lbs.) torque.

(21) Install the last 2 screws.

(22) Use 3M 08044 or 08041 adhesive/sealant to re-install plastic water dam sheet.

(23) Reverse remaining removal procedures to complete installation.

POWER MIRRORS

CONTENTS

	page		page
DIAGNOSIS	1	SERVICE PROCEDURES	4
GENERAL INFORMATION	1		

GENERAL INFORMATION

Power outside rear view mirrors are an available option on XJ (Cherokee) models. Following are general descriptions of the major components in the power mirror system. Refer to Group 8W - Wiring Diagrams for complete circuit descriptions and diagrams.

POWER MIRROR

The power mirrors are connected to battery feed at all times. Each mirror head contains two electric motors, two drive mechanisms and the mirror glass. One motor and drive controls mirror up-and-down movement, and the other controls right-and-left movement.

The mirror glass is the only serviced replacement part for the power mirror assembly. If any other component of the mirror unit is faulty or damaged, the entire assembly must be replaced.

POWER MIRROR SWITCH

Both the right and left mirror are controlled by a multi-function switch located on the front of the center console storage compartment, directly below the armrest. The selector switch is moved right (right mirror control), left (left mirror control), or center to turn power mirrors off. Then one of four directional control buttons is depressed to control movement of the selected mirror up, down, right, or left. The power mirror switch is serviced only as a complete unit.

DIAGNOSIS

POWER MIRROR SYSTEM

(1) Check fuse 16 in Power Distribution Center (PDC) and fuse 9 in fuseblock module. If OK, go to next step. If not OK, replace fuse.

(2) Check for battery voltage at fuse 9 in fuseblock module. If OK, go to next step. If not OK, repair circuit to fuse 16 in PDC.

(3) Remove power mirror switch from the center console. See Power Mirror Switch Remove/Install.

(4) Disconnect wiring harness connector from switch. Check for battery voltage at pink wire. If OK, go to next step. If not OK, repair circuit to fuse 9 in fuseblock module.

(5) Check for continuity between black wire in switch harness connector and a good ground. There should be continuity. If OK, go to next step. If not OK, repair circuit to ground.

(6) Check switch continuity as shown in the Mirror Switch Continuity charts. If OK, go to next step. If not OK, replace switch.

(7) See Power Mirror Switch illustration. Connect a jumper wire from mirror switch connector cavity for pin E to cavity for pin F. Now connect a second jumper from connector cavity for pin G to each of the following pin cavities: A, B, C, then D. In each case, the selected mirror head should move. If OK, replace switch. If not OK, go to next step.

(8) Remove door trim panel and unplug power mirror connector inside door. Connect one jumper wire to a good ground and a second jumper wire to a battery feed. Connect other ends of jumpers to the mirror side of connector in door (refer to Group 8W - Wiring Diagrams for connector cavity identification). Mirror head should move in each of the four directions. If OK, repair wiring between mirror switch and door connectors. If not OK, replace mirror.

POWER MIRROR SWITCH

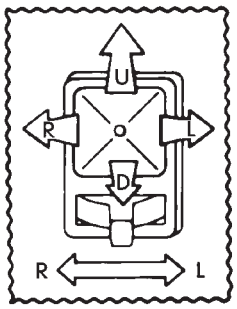

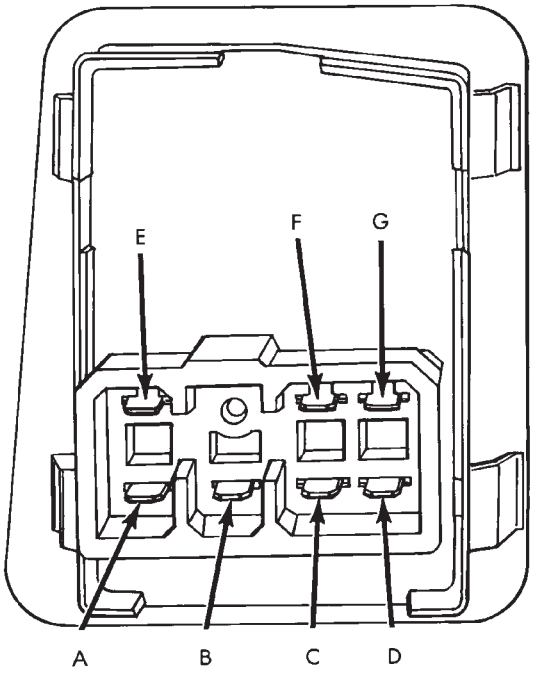

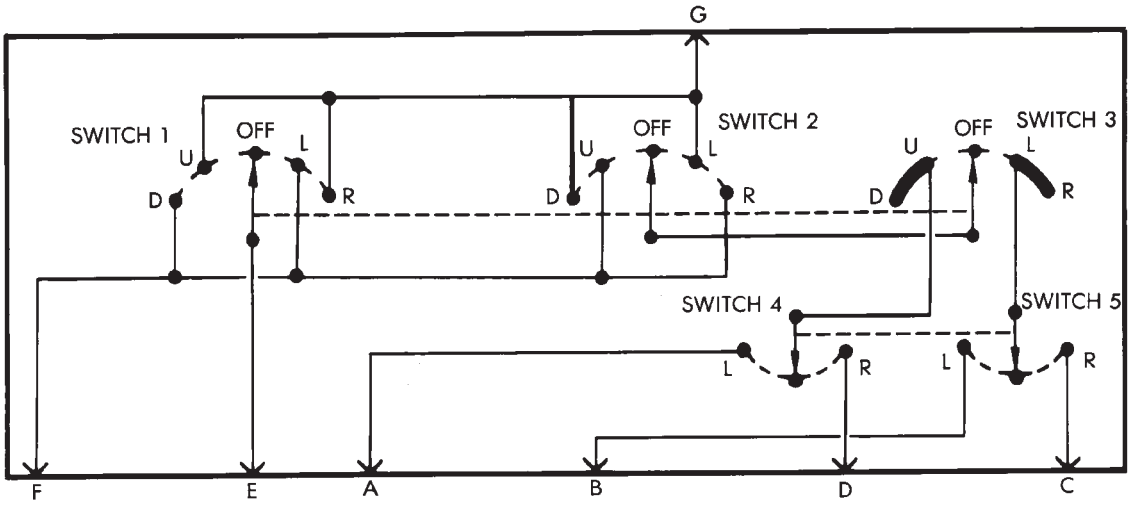

J928T-1

POWER MIRROR SWITCH CONTINUITY (LEFT POSITION)

SWITCH POSITION	TERMINALS	ZERO OHMS
Push Down (D)	A and G	Yes
	E and F	Yes
	All Others	No
Push Up (U)	A and F	Yes
	E and G	Yes
	All Others	No
Off (Normal)	All Others	No
Push Left (L)	B and G	Yes
	E and F	Yes
	All Others	No
Push Right (R)	B and F	Yes
	E and G	Yes
	All Others	No

J918T-1

POWER MIRROR SWITCH CONTINUITY (RIGHT POSITION)

SWITCH POSITION	TERMINALS	ZERO OHMS
Push Down (D)	D and G	Yes
	E and F	Yes
	All Others	No
Push Up (U)	D and F	Yes
	E and G	Yes
	All Others	No
Off (Normal)	All Others	No
Push Left (L)	C and G	Yes
	E and F	Yes
	All Others	No
Push Right (R)	C and F	Yes
	E and G	Yes
	All Others	No

J918T-2

SERVICE PROCEDURES

POWER MIRROR SWITCH REMOVE/INSTALL

(1) Disconnect battery negative cable.

(2) Using a wide flat-bladed tool, pry the switch housing away from the center console (Fig. 1).

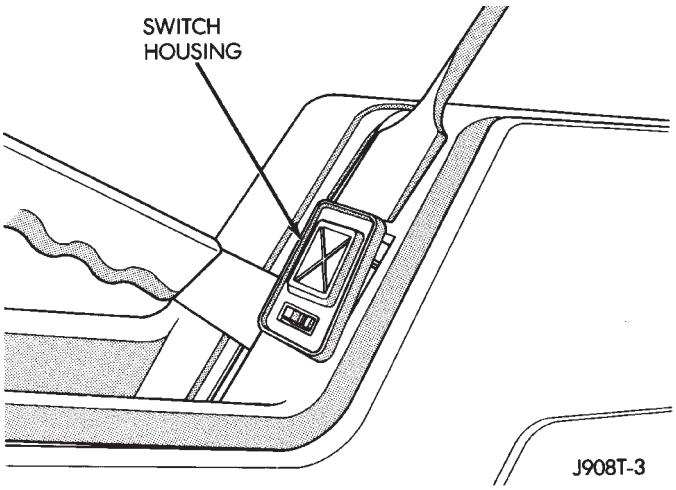

Fig. 1 Power Mirror Switch Remove/Install

(3) Disconnect switch connector and remove switch.

(4) Reverse removal procedures to install.

POWER MIRROR REMOVE/INSTALL

(1) Remove interior door latch release assembly and control panel retaining screws (Fig. 2).

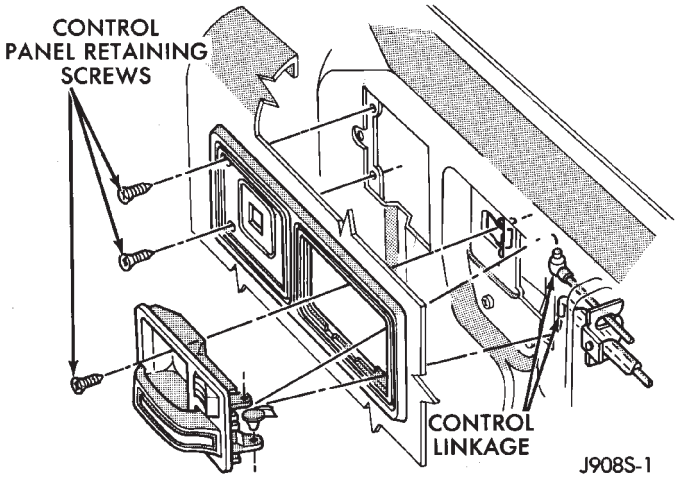

Fig. 2 Door Control Panel Remove/Install

(2) Disconnect control linkage and wire harness connector.

(3) Remove latch release and control panel assembly.

(4) Remove armrest lower retaining screws.

(5) Swing armrest downward to a vertical position. This is necessary to disconnect the armrest from the upper retainer clip (Fig. 3).

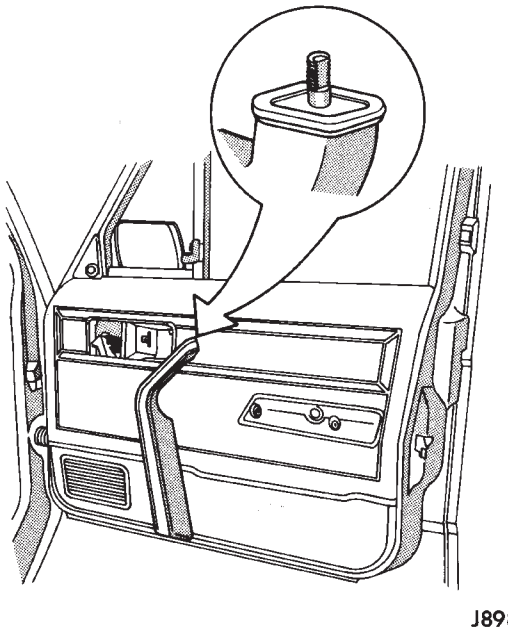

Fig. 3 Armrest Retainer Clip

(6) Pull the armrest straight out from the trim panel.

(7) Remove the trim panel with a wide flat-bladed tool (Fig. 4). To aid in removal of the trim panel, start at the bottom of the panel.

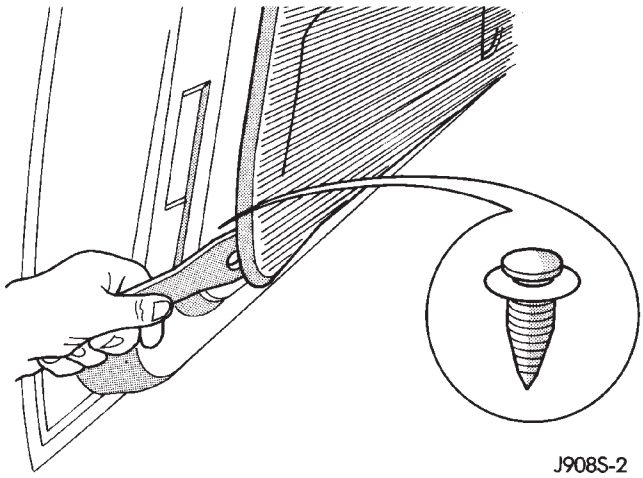

Fig. 4 Trim Panel Remove

(8) Remove screw holding mirror trim cover (Fig. 5).

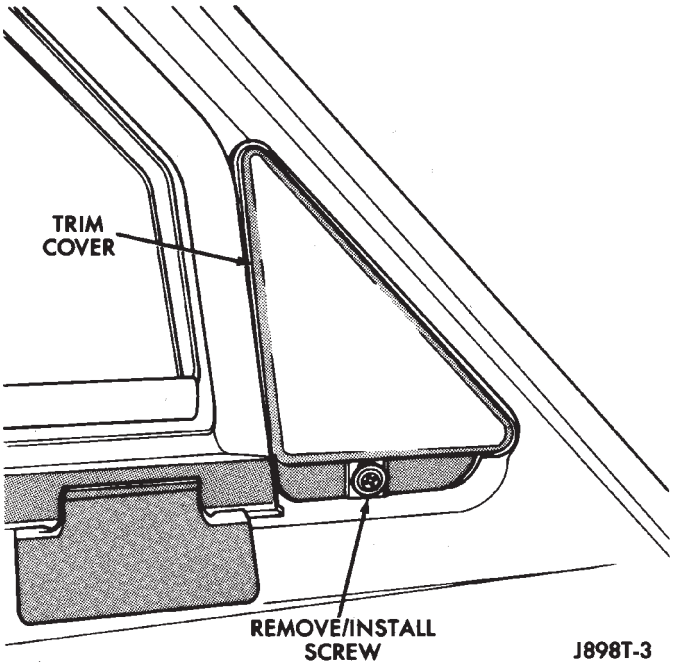

Fig. 5 Power Mirror Trim Cover

(9) Disconnect power mirror wire harness at connector in door.

(10) Pull harness up through door.

(11) Remove 3 screws holding mirror to door (Fig. 6).

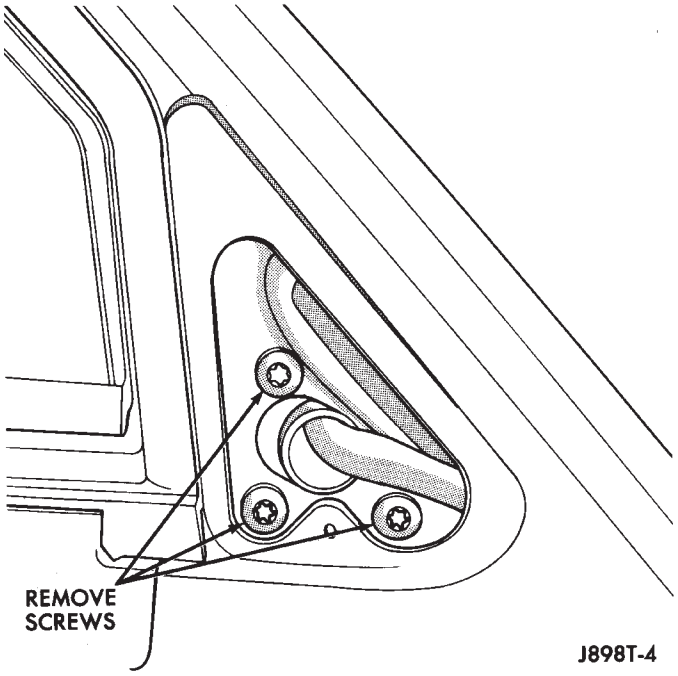

Fig. 6 Power Mirror Remove/Install

(12) Reverse removal procedures to install.

CHIME/BUZZER WARNING SYSTEMS

CONTENTS

	page		page
DIAGNOSIS	2	SERVICE PROCEDURES	4
GENERAL INFORMATION	1		

GENERAL INFORMATION

This group covers the buzzer warning system, which is standard equipment on XJ (Cherokee)/YJ (Wrangler) models. The system provides an audible warning to the driver when it monitors the following conditions:

- key is in ignition switch with the driver's door open
- head or park lamps are on with driver's door open (XJ only)
- driver's seat belt is not buckled with ignition switch in ON position.

Following are general descriptions of the major components in the buzzer warning system. Refer to Group 8W - Wiring Diagrams for complete circuit descriptions and diagrams.

BUZZER MODULE

The buzzer module is located in the fuseblock module under the left end of the instrument panel. It receives battery voltage at all times from (fuse 15 - XJ, fuse 3 - YJ) the fuseblock module. It also receives a second battery feed (fuse 17 - XJ, fuse 9 - YJ) when the ignition switch is in the ON or START position.

Other inputs to the module include the driver's door jamb switch, the driver's seat belt switch, the ignition key-in switch, and the headlamp switch (XJ only). The only output of the module is a timed 4 to 8 second feed to the seat belt reminder lamp in the message center of the instrument cluster. The timer function begins after the ignition switch is turned to the ON position.

The buzzer module can not be repaired. If faulty, it must be replaced.

DRIVER'S DOOR JAMB SWITCH

The driver's door jamb switch is mounted to the driver's door hinge pillar. The switch closes a path to ground for the buzzer module through the key-in switch or headlamp switch (XJ only) when the driver's door is opened, and opens when the driver's door is closed. This switch can not be repaired. If faulty, it must be replaced.

IGNITION KEY-IN SWITCH

XJ MODELS

The key-in switch is integral to the ignition switch, which is mounted on the right side of the steering column. It closes a path to ground for the buzzer module when the ignition key is inserted in the ignition lock cylinder and the driver's door jamb switch is closed (door open). The switch opens when the key is removed from the ignition lock cylinder. This switch can not be repaired. If faulty, the entire ignition switch must be replaced. Refer to Group 8D - Ignition Systems for service procedures.

YJ MODELS

The key-in switch is mounted within the steering column in the lock cylinder housing. It closes a path to ground for the buzzer module when the ignition key is inserted in the ignition lock cylinder and the driver's door jamb switch is closed (door open). The switch opens when the key is removed from the ignition lock cylinder. This switch is available for service replacement. Refer to Group 19 - Steering for service procedures.

HEADLAMP SWITCH (XJ ONLY)

The headlamp switch is located in the instrument panel. It closes a path to ground for the buzzer module when the park or headlamps are on and the driver's door jamb switch is closed (door open). The switch opens the ground path when the park and headlamps are turned off. The headlamp switch can not be repaired. If faulty, it must be replaced. Refer to Group 8E - Instrument Panel and Gauges for service procedures.

DRIVER'S SEAT BELT SWITCH

The driver's seat belt switch is integral to the driver's seat belt buckle-half assembly. The switch is normally closed, providing a ground path to the buzzer module. When the tip-half of the seat belt is inserted into the seat belt buckle, the switch opens the buzzer module ground path. The seat belt switch can not be repaired. If faulty, the entire driver's seat belt buckle-half must be replaced. Refer to Group 23 - Body Components for service procedures.

DIAGNOSIS

BUZZER MODULE

(1) Check fuses (15 and 17 - XJ, 3 and 9 - YJ) in the fuseblock module. If fuses are OK, go to next step. If not OK, replace fuses as required.

(2) Check for battery voltage at fuse (15 - XJ, 3 - YJ) in fuseblock module. If OK, go to next step. If not OK, repair feed circuit from power distribution center as required.

(3) Turn ignition switch to ON position. Check for battery voltage at fuse (17 - XJ, 9 - YJ) in the fuseblock module. If OK, go to next step. If not OK, repair feed from ignition switch as required.

(4) Turn ignition switch to OFF position. Replace buzzer module with a known good unit and test operation. If not OK, remove buzzer module and go to next step.

(5) Check for battery voltage at cavity for buzzer terminal 7 in buzzer module connector (Fig. 1). If OK, go to next step. If not OK, repair circuit to fuse (15 - XJ, 3 - YJ).

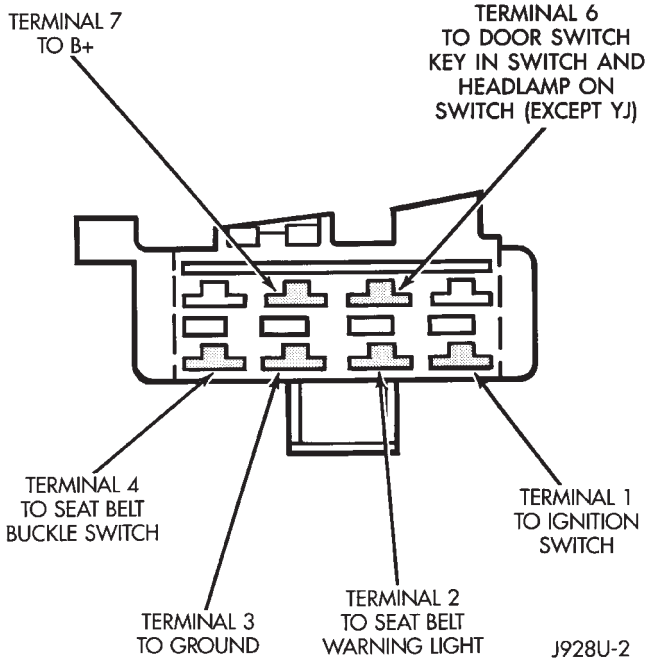

Fig. 1 Buzzer Module Connector

(6) Turn ignition switch to ON position. Check for battery voltage at cavity for buzzer terminal 1 in buzzer module connector. If OK, go to next step. If not OK, repair circuit to fuse (17 - XJ, 9 - YJ) in fuseblock module.

(7) Turn ignition switch to OFF position. Check for continuity between cavity for buzzer terminal 3 and a good ground. There should be continuity. If OK, go to diagnosis for switch that is related to buzzer malfunction. If not OK, repair circuit to ground as required.

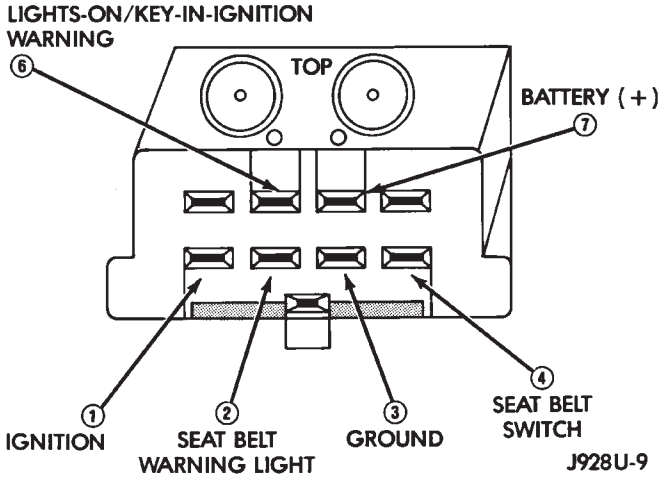

Fig. 2 Buzzer Module Terminals

DRIVER'S DOOR JAMB SWITCH

(1) Open driver's door and note whether interior lamps light. They should light. If OK, see diagnosis for Ignition Key-In Switch (XJ or YJ) or Headlamp Switch (XJ only). If not OK, go to next step.

(2) Check for continuity between door jamb switch body and a good ground. There should be continuity. If OK, go to next step. If not OK, tighten or clean switch attachment to hinge pillar as required to restore ground path.

(3) Remove switch from hinge pillar and check wire connections for clean and tight engagement. If OK, replace faulty switch. If not OK, clean and tighten connections as required.

IGNITION KEY-IN SWITCH

XJ MODELS

(1) Remove steering column shrouds (refer to Group 8D - Ignition Systems for procedure). Unplug ignition key-in switch connector from ignition switch (Fig. 3). Open driver's door. Check for continuity between cavity 4 (black/light blue wire) and a good ground. There should be continuity. If OK, go to next step. If not OK, repair circuit to driver's door jamb switch as required.

(2) Insert ignition key in ignition lock cylinder. Check for continuity between key-in switch cavities 3 and 4 (Fig. 4). There should be continuity until key is removed. If OK, go to next step. If not OK, replace ignition switch.

(3) Check for continuity between key-in switch harness connector cavity 3 (light blue wire) and cavity for terminal 6 of buzzer module in buzzer module connector. There should be continuity. If not OK, repair circuit from switch to buzzer module as required.

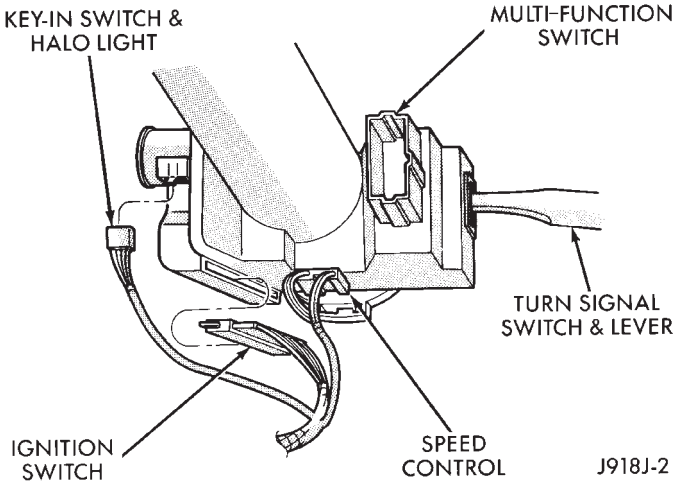

Fig. 3 Key-In Switch Connector

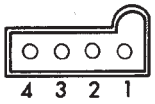

WIRE CAVITY	APPLICATION	CONTINUITY BETWEEN
1 2	Halo lamp Halo lamp	1 & 2 Almost zero ohms (bulb filament)
3 4	Key-in warning switch Key-in warning switch	3 & 4 with key in ignition

J918M-3

Fig. 4 Key-In Switch Continuity

YJ MODELS

(1) Unplug steering column connector from instrument panel wiring. Open driver's door. Check for continuity between cavity E (black/light blue wire) in instrument panel half of steering column connector and a good ground. There should be continuity. If OK, go to next step. If not OK, repair circuit to driver's door jamb switch as required.

(2) Insert ignition key in ignition lock cylinder. Check for continuity between cavities E (pink wire) and F (black wire) in steering column half of connector. There should be continuity until key is removed. If OK, go to next step. If not OK, repair steering column wiring or replace key-in switch as required.

(3) Check for continuity between cavity F (light blue wire) in instrument panel half of steering column connector and cavity for terminal 6 of buzzer module in buzzer module connector. There should be continuity. If not OK, repair circuit from switch to buzzer module as required.

HEADLAMP SWITCH (XJ ONLY)

(1) Remove headlamp switch from instrument panel (refer to Group 8E - Instrument Panel and Gauges for procedure). Unplug headlamp switch connector. Open driver's door. Check for continuity between headlamp switch connector cavity with light blue wire and a good ground. There should be continuity until driver's door is closed. If OK, go to next step. If not OK, repair circuit from headlamp switch to driver's door jamb switch as required.

(2) Check for continuity between headlamp switch connector cavity with pink/light blue wire and cavity for terminal 6 of buzzer module in buzzer module connector. There should be continuity. If OK, go to next step. If not OK, repair circuit from headlamp switch to buzzer module as required.

(3) Check continuity between headlamp switch terminal for connector cavity with pink/light blue wire and terminal for cavity with light blue wire. There should be no continuity with switch in off position, and there should be continuity with switch in park lamps or headlamps on position. If not OK, replace headlamp switch.

DRIVER'S SEAT BELT SWITCH

(1) Unplug seat belt switch connector on floor under driver's seat riser near seat belt anchor. Check for continuity between two cavities of seat belt half of connector. There should be continuity with seat belt unbuckled, and no continuity with seat belt buckled. If OK, go to next step. If not OK, replace seat belt buckle-half assembly.

(2) Check for continuity between cavity with black wire in harness half of seat belt switch connector and a good ground. There should be continuity. If OK, go to next step. If not OK, repair circuit to ground as required.

(3) Check for continuity between cavity with light green wire in harness half of seat belt switch connector and cavity for terminal 4 of buzzer module connector. There should be continuity. If not OK, repair circuit from seat belt switch connector to buzzer module as required.

BUZZER MODULE SCHEMATIC - XJ

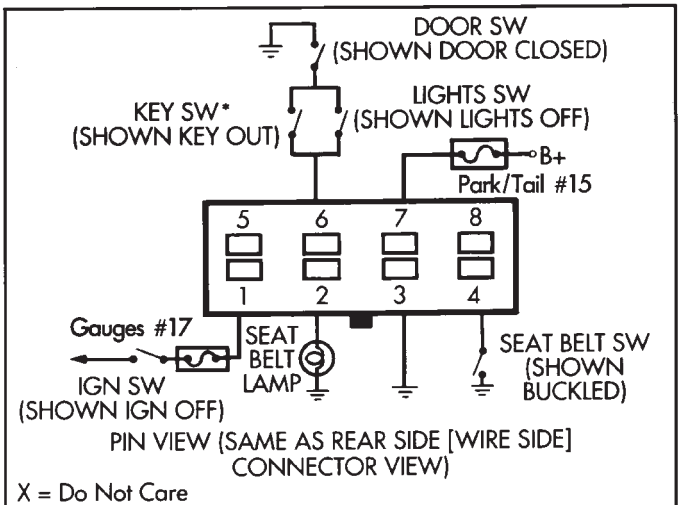

X = Do Not Care

FUNCTION	DESCRIPTION	IGN.	SEAT BELT	DRIVER'S DOOR	KEY	HEAD LAMPS
Seat Belt Reminder	4 to 8 Second Tone and Lamp Output	On / Off	Not Bckld	X	X	X
	4 to 8 Second Lamp Output Only	On / Off	Bckld	X	X	X
Key and Head Lamp Reminder*	Continuous, Steady Tone	X	X	Open	In	X
					X	On

*On some vehicles, the key switch opens when the ignition is switched on.

J928U-10

BUZZER MODULE SCHEMATIC - YJ

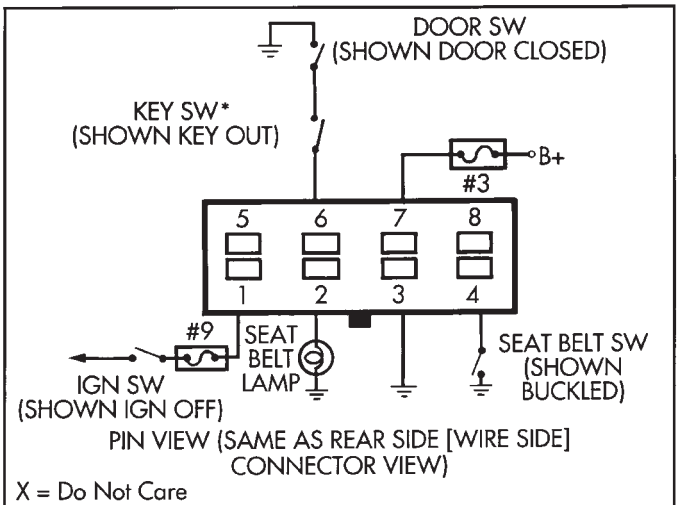

X = Do Not Care

FUNCTION	DESCRIPTION	IGN.	SEAT BELT	DRIVER'S DOOR	KEY
Seat Belt Reminder	4 to 8 Second Tone and Lamp Output	On / Off	Not Bckld	X	X
	4 to 8 Second Lamp Output Only	On / Off	Bckld	X	X
Key Reminder*	Continuous, Steady Tone	X	X	Open	In
					X

*On some vehicles, the key switch opens when the ignition is switched on.

J928U-1

SERVICE PROCEDURES

Service procedures for components of the buzzer system can be found in the appropriate group as follows:

- driver's door jamb switch - refer to Group 8L - Lamps
- ignition key-in switch (XJ) - refer to Group 8D - Ignition Systems
- ignition key-in switch (YJ) - refer to Group 19 - Steering
- headlamp switch - refer to Group 8E - Instrument Panel and Gauges
- driver's seat belt switch - refer to Group 23 - Body Components.

WIRING DIAGRAMS—GENERAL INFORMATION

INDEX

	page
Circuit Identification	1
Connector and Terminal Replacement	7
Connector Replacement	6
Connectors	2
Diode Replacement	8
Electrostatic Discharge (ESC) Sensitive Devices	2
General Information	1
Intermittent and Poor Connections	4
Notes, Cautions, and Warnings	1
Symbols	2
Take Outs	2
Terminal Replacement	8
Terminal/Connector Repair—Molex Connectors	6
Troubleshooting Tests	4
Troubleshooting Tools	4
Troubleshooting Wiring Problems	5
Wire Code Identification	1
Wiring Repair	6

GENERAL INFORMATION

This Group is divided into three stand alone sections; XJ, YJ, and XJ Right Hand Drive (XJ-RHD). Separate circuit descriptions and wiring diagrams are provided for each vehicle. Each section contains a Contents list for the wiring diagrams and circuit descriptions for that vehicle.

The complete XJ circuit descriptions and diagrams are printed first, followed by those for the YJ and then the XJ-RHD. The heading at the top of each page identifies the vehicle covered in the section.

NOTES, CAUTIONS, and WARNINGS

Throughout this group additional important information is presented in three ways; Notes, Cautions, and Warnings.

NOTES are used to help describe how switches or components operate to complete a particular circuit. They are also used to indicate different conditions that may appear on the vehicle. For example, an up-to and after condition.

CAUTIONS are used to indicate information that could prevent making an error that may damage the vehicle.

WARNINGS provide information to prevent personal injury and vehicle damage. Below is a list of general warnings that should be followed any time a vehicle is being serviced.

ALWAYS WEAR SAFETY GLASSES FOR EYE PROTECTION.

USE SAFETY STANDS ANYTIME A PROCEDURE REQUIRES BEING UNDER A VEHICLE.

BE SURE THAT THE IGNITION SWITCH ALWAYS IS IN THE OFF POSITION, UNLESS THE PROCEDURE REQUIRES IT TO BE ON.

SET THE PARKING BRAKE WHEN WORKING ON ANY VEHICLE. AN AUTOMATIC TRANSMISSION SHOULD BE IN PARK. A MANUAL TRANSMISSION SHOULD BE IN NEUTRAL.

OPERATE THE ENGINE ONLY IN A WELL-VENTILATED AREA.

KEEP AWAY FROM MOVING PARTS WHEN THE ENGINE IS RUNNING, ESPECIALLY THE FAN AND BELTS.

TO PREVENT SERIOUS BURNS, AVOID CONTACT WITH HOT PARTS SUCH AS THE RADIATOR, EXHAUST MANIFOLD(S), TAIL PIPE, CATALYTIC CONVERTER, AND MUFFLER.

DO NOT ALLOW FLAME OR SPARKS NEAR THE BATTERY. GASES ARE ALWAYS PRESENT IN AND AROUND THE BATTERY.

ALWAYS REMOVE RINGS, WATCHES, LOOSE HANGING JEWELRY, AND LOOSE CLOTHING.

WIRE CODE IDENTIFICATION

Each wire shown in the diagrams contains a code (Fig. 1) which identifies the main circuit, part of the main circuit, gauge of wire, and color. The color is shown as a two letter code which can be identified by referring to the Wire Color Code Chart (Fig. 2).

CIRCUIT IDENTIFICATION

All circuits in the diagrams use an alpha/numeric code to identify the wire and its function (Fig. 3). To identify which circuit code applies to a system, refer to the Circuit Identification Code Chart. This chart shows the main circuits only and does not show the secondary codes that may apply to some models.

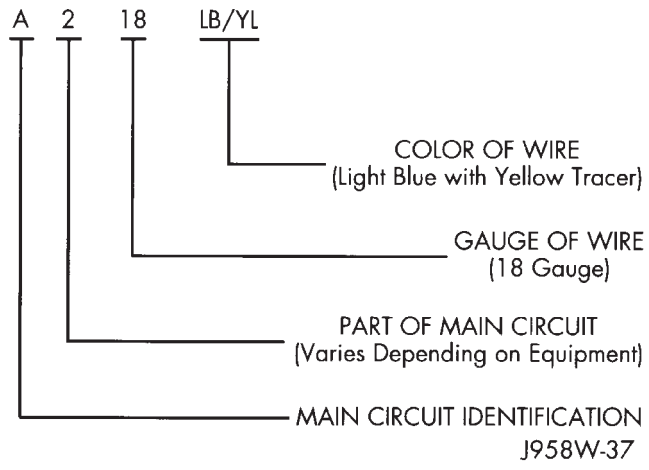

Fig. 1 Wire Color Code Identification

COLOR CODE	COLOR	STANDARD TRACER COLOR	COLOR CODE	COLOR	STANDARD TRACER CODE
BL	BLUE	WT	OR	ORANGE	BK
BK	BLACK	WT	PK	PINK	BK OR WT
BR	BROWN	WT	RD	RED	WT
DB	DARK BLUE	WT	TN	TAN	WT
DG	DARK GREEN	WT	VT	VIOLET	WT
GY	GRAY	BK	WT	WHITE	BK
LB	LIGHT BLUE	BK	YL	YELLOW	BK
LG	LIGHT GREEN	BK	*	WITH TRACER	

918W-136

Fig. 2 Wire Color Code Chart

CONNECTORS

Connectors shown in the diagrams are identified using the international standard arrows for male and female terminals (Fig. 4). A connector identifier is placed next to the arrows to indicate the connector number (Fig. 4).

For viewing connector pin outs, with two terminals or greater, refer to section 8W-80. This section identifies the connector by number and provides terminal numbering, circuit identification, wire colors, and functions.

All connectors are viewed from the terminal end unless otherwise specified. To find the connector location in the vehicle refer to section 8W-90. This section uses the connector identification number from the wiring diagrams to provide a figure number reference.

CIRCUIT	FUNCTION
A	Battery Feed
B	Brake Controls
C	Climate Controls
D	Diagnostic Circuits
E	Dimming Illumination Circuits
F	Fused Circuits (Secondary Feed)
G	Monitoring Circuits (Gauges)
H	Open
I	Not Used
J	Open
K	Powertrain Control Module
L	Exterior Lighting
M	Interior Lighting
N	ESA Module
O	Not Used
P	Power Option (Battery Feed)
Q	Power Options (Battery Feed)
R	Passive Restraint
S	Suspension/Steering
T	Transmission/Transaxle/Transfer Case
U	Open
V	Speed Control, Washer/Wiper
W	Open
X	Audio Systems
Y	Open
Z	Grounds

948W-190

Fig. 3 Circuit Identification

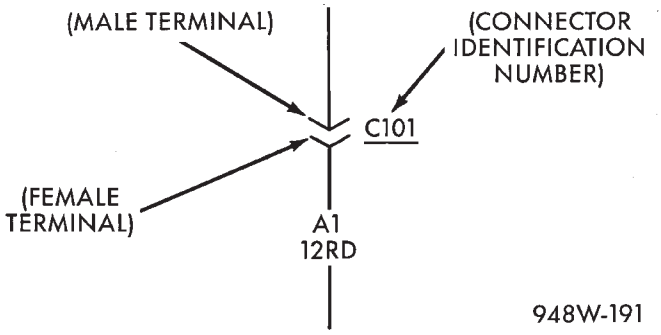

Fig. 4 Connector Identification

TAKE OUTS

The abbreviation T/O is used in the component location section to indicate a point in which the wiring harness branches out to a component.

SYMBOLS

Various symbols are used throughout the Wiring Diagrams. These symbols can be identified by referring to the symbol identification chart (Fig. 5).

ELECTROSTATIC DISCHARGE (ESD) SENSITIVE DEVICES

All ESD sensitive components are solid state and a symbol (Fig. 6) is used to indicate this. When handling any component with this symbol, comply with

LEGEND OF SYMBOLS USED ON WIRING DIAGRAMS			
+	POSITIVE		BY-DIRECTIONAL ZENER DIODE
–	NEGATIVE		MOTOR
	GROUND		ARMATURE AND BRUSHES
	FUSE	C100	CONNECTOR IDENTIFICATION
	GANG FUSES WITH BUSS BAR		MALE CONNECTOR
	CIRCUIT BREAKER		FEMALE CONNECTOR
	CAPACITOR		DENOTES WIRE CONTINUES ELSEWHERE
Ω	OHMS		DENOTES WIRE GOES TO ONE OF TWO CIRCUITS
	RESISTOR		SPLICE
	VARIABLE RESISTOR	S100	SPLICE IDENTIFICATION
	SERIES RESISTOR		THERMAL ELEMENT
	COIL	TIMER	TIMER
	STEP UP COIL		MULTIPLE CONNECTOR
	OPEN CONTACT		OPTIONAL WIRING WITH / WIRING WITHOUT
	CLOSED CONTACT		"Y" WINDINGS
	CLOSED SWITCH	88:88	DIGITAL READOUT
	OPEN SWITCH		SINGLE FILAMENT LAMP
	CLOSED GANGED SWITCH		DUAL FILAMENT LAMP
	OPEN GANGED SWITCH		L.E.D. — LIGHT EMITTING DIODE
	TWO POLE SINGLE THROW SWITCH		THERMISTOR
	PRESSURE SWITCH		GAUGE
	SOLENOID SWITCH		SENSOR
	MERCURY SWITCH		FUEL INJECTOR
	DIODE OR RECTIFIER		948W-192

Fig. 5 Symbol Identification

the following procedures to reduce the possibility of electrostatic charge build up on the body and inadvertent discharge into the component. If it is not known whether the part is ESD sensitive, assume that it is.

(1) Always touch a known good ground before handling the part. This should be repeated while handling the part and more frequently after sliding across a seat, sitting down from a standing position, or walking a distance.

(2) Avoid touching electrical terminals of the part, unless instructed to do so by a written diagnostic procedure.

(3) When using a voltmeter, be sure to connect the ground lead first.

(4) Do not remove the part from its protective packing until it is time to install the part.

(5) Before removing the part from its package, ground the package to a known good ground on the vehicle.

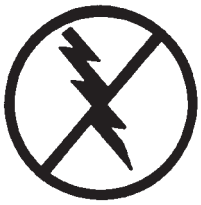

948W-193

Fig. 6 Electrostatic Discharge Symbol

TROUBLESHOOTING TOOLS

When diagnosing a problem in an electrical circuit there are several common tools necessary. These tools are listed and explained below.

- Jumper Wire - This is a test wire used to connect two points of a circuit. It can be used to bypass an open in a circuit.

WARNING: NEVER USE A JUMPER WIRE ACROSS A LOAD, SUCH AS A MOTOR, CONNECTED BETWEEN A BATTERY FEED AND GROUND.

- Voltmeter - Used to check for voltage on a circuit. Always connect the black lead to a known good ground and the red lead to the positive side of the circuit.

CAUTION: Most of the electrical components used in today's vehicle are solid state. When checking voltages in these circuits use a meter with a 10-megohm or greater impedance.

- Ohmmeter - Used to check the resistance between two points of a circuit. Low or no resistance in a circuit means good continuity.

CAUTION: - Most of the electrical components used in today's vehicle are Solid State. When checking resistance in these circuits use a meter with a 10-megohm or greater impedance. In addition, make sure the power is disconnected from the circuit. Circuits that are powered up by the vehicle electrical system can cause damage to the equipment and provide false readings.

- Probing Tools - These tools are used for probing terminals in connectors (Fig. 7). Select the proper size tool from Special Tool Package 6807, and insert it into the terminal being tested. Use the other end of the tool to insert the meter probe.

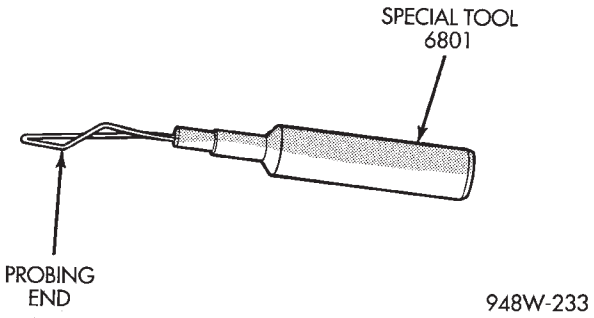

Fig. 7 Probing Tool

INTERMITTENT AND POOR CONNECTIONS

Most intermittent electrical problems are caused by faulty electrical connections or wiring. It is also possible for a sticking component or relay to cause a problem. Before condemning a component or wiring assembly check the following items.

- Connectors are fully seated
- Spread terminals, or terminal push out
- Terminals in the wiring assembly are fully seated into the connector/component and locked in position
- Dirt or corrosion on the terminals. Any amount of corrosion or dirt could cause an intermittent problem
- Damaged connector/component casing exposing the item to dirt and moisture
- Wire insulation that has rubbed through causing a short to ground
- Wiring broke inside of the insulation

TROUBLESHOOTING TESTS

Before beginning any tests on a vehicle's electrical system, use the Wiring Diagrams and study the circuit. Also refer to the Troubleshooting Wiring Problems section in this section.

TESTING FOR VOLTAGE

(1) Connect the ground lead of a voltmeter to a known good ground (Fig. 8).

(2) Connect the other lead of the voltmeter to the selected test point. The vehicle ignition may need to be turned ON to check voltage. Refer to the appropriate test procedure.

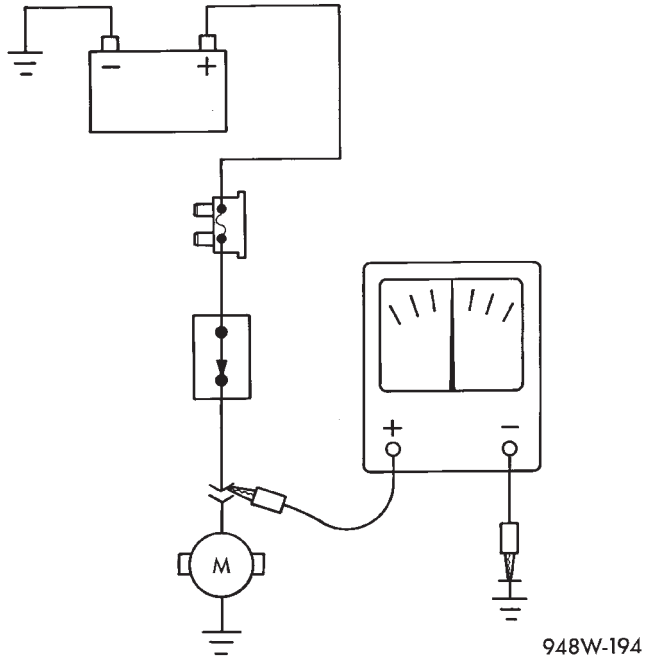

Fig. 8 Testing for Voltage

TESTING FOR CONTINUITY

(1) Remove the fuse for the circuit being checked or, disconnect the battery.

(2) Connect one lead of the ohmmeter to one side of the circuit being tested (Fig. 9).

(3) Connect the other lead to the other end of the circuit being tested. Low or no resistance means good continuity.

TESTING FOR A SHORT TO GROUND

(1) Remove the fuse and disconnect all items involved with the fuse.

(2) Connect a test light or a voltmeter across the terminals of the fuse.

(3) Starting at the fuse block, wiggle the wiring harness about six to eight inches apart and watch the voltmeter/test lamp.

(4) If the voltmeter registers voltage or the test lamp glows, there is a short to ground in that general area of the wiring harness.

TESTING FOR A SHORT TO GROUND ON FUSES POWERING SEVERAL LOADS

(1) Refer to the wiring diagrams and disconnect or isolate all items on the fused circuit.

(2) Replace the blown fuse.

(3) Supply power to the fuse by turning ON the ignition switch or re-connecting the battery.

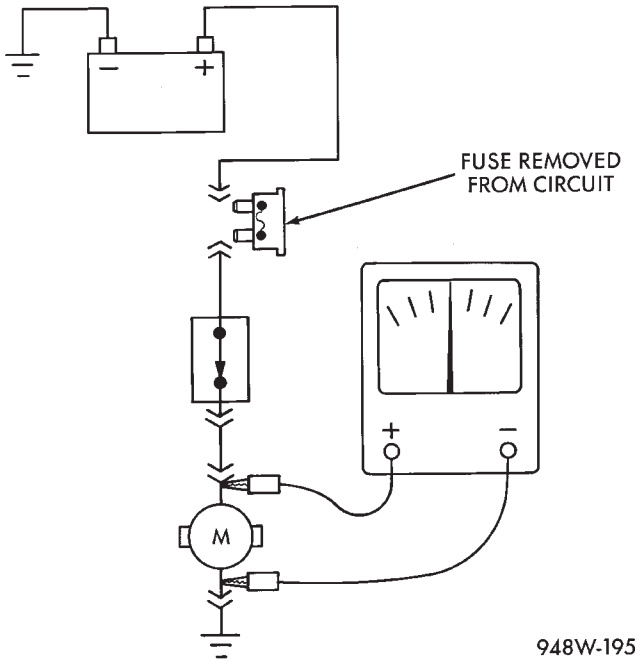

Fig. 9 Testing for Continuity

(4) Start connecting the items in the fuse circuit one at a time. When the fuse blows the circuit with the short to ground has been isolated.

TESTING FOR A VOLTAGE DROP

(1) Connect the positive lead of the voltmeter to the side of the circuit closest to the battery (Fig. 10).

(2) Connect the other lead of the voltmeter to the other side of the switch or component.

(3) Operate the item.

(4) The voltmeter will show the difference in voltage between the two points.

TROUBLESHOOTING WIRING PROBLEMS

When troubleshooting wiring problems there are six steps which can aid in the procedure. The steps are listed and explained below. Always check for non-factory items added to the vehicle before doing any diagnosis. If the vehicle is equipped with these items, disconnect them to verify these add-on items are not the cause of the problem.

(1) Verify the problem.

(2) Verify any related symptoms. Do this by performing operational checks on components that are in the same circuit. Refer to the wiring diagrams.

(3) Analyze the symptoms. Use the wiring diagrams to determine what the circuit is doing, where the problem most likely is occurring and where the diagnosis will continue.

(4) Isolate the problem area.

(5) Repair the problem.

(6) Verify proper operation. For this step, check for proper operation of all items on the repaired circuit. Refer to the wiring diagrams.

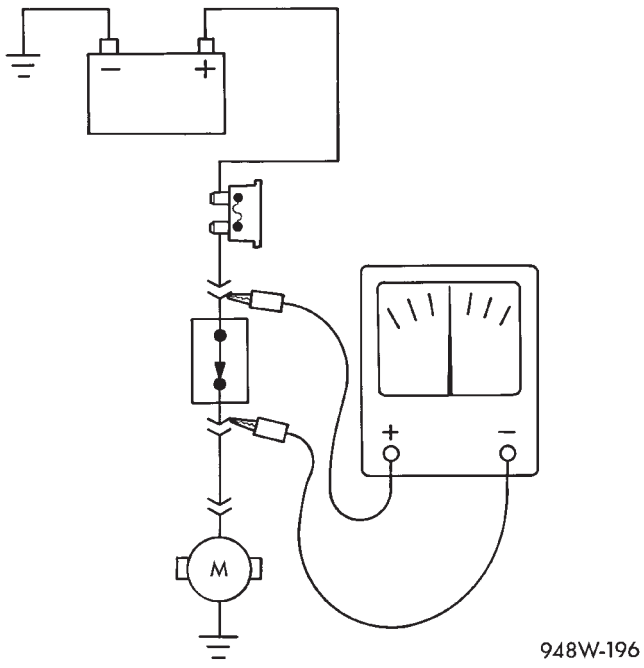

Fig. 10 Testing for Voltage Drop

WIRING REPAIR

When replacing or repairing a wire, it is important that the correct gauge be used as shown in the wiring diagrams. The wires must also be held securely in place to prevent damage to the insulation.

(1) Disconnect battery negative cable.

(2) Remove 1 inch of insulation from each end of the wire.

(3) Place a piece of heat shrink tubing over one side of the wire. Make sure the tubing will be long enough to cover and seal the entire repair area.

(4) Spread the strands of the wire apart on each part of the exposed wires (Fig. 11 example 1).

(5) Push the two ends of wire together until the strands of wire are close to the insulation (Fig. 11 example 2).

(6) Twist the wires together (Fig. 11 example 3).

(7) Solder the connection together using rosin core type solder only. **Do not use acid core solder.**

(8) Center the heat shrink tubing over the joint, and heat using a heat gun. Heat the joint until the tubing is tightly sealed and sealant comes out of both ends of the tubing.

(9) Secure the wire to the existing ones to prevent chafing or damage to the insulation.

(10) Connect battery and test all affected systems.

TERMINAL/CONNECTOR REPAIR—MOLEX CONNECTORS

(1) Disconnect battery.

(2) Disconnect the connector from its mating half/component.

(3) Insert the terminal releasing special tool 6742 into the terminal end of the connector (Fig. 12).

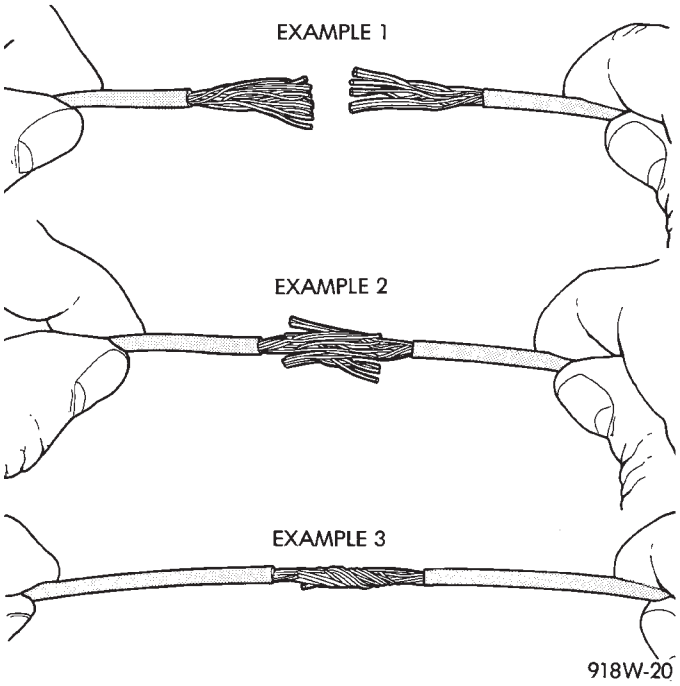

Fig. 11 Wire Repair

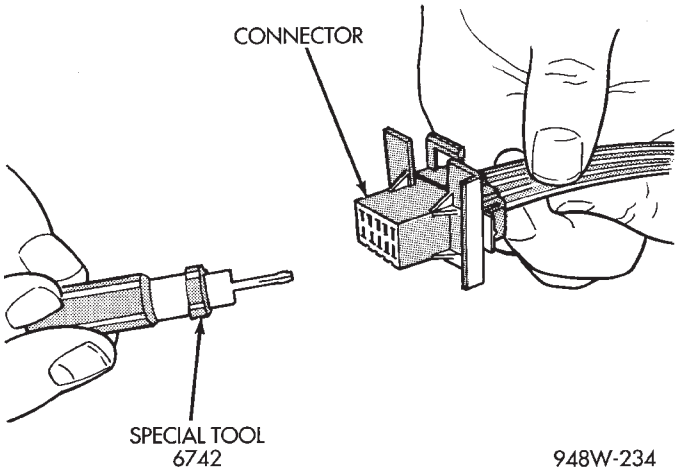

Fig. 12 Molex Connector Repair

(4) Using special tool 6742, release the locking fingers on the terminal (Fig. 13).

(5) Pull on the wire to remove it from the connector.

(6) Repair or replace the connector or terminal as necessary.

CONNECTOR REPLACEMENT

(1) Disconnect battery.

(2) Disconnect the connector that is to be repaired from its mating half/component.

(3) Remove connector locking wedge, if required (Fig. 14).

(4) Position the connector locking finger away from the terminal using the proper pick from special tool kit 6680. Pull on the wire to remove the terminal from the connector (Fig. 15, and Fig. 16).

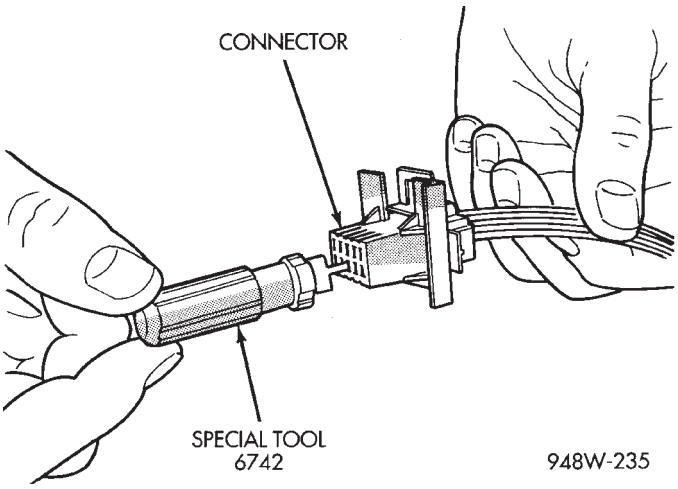

Fig. 13 Using Special Tool 6742

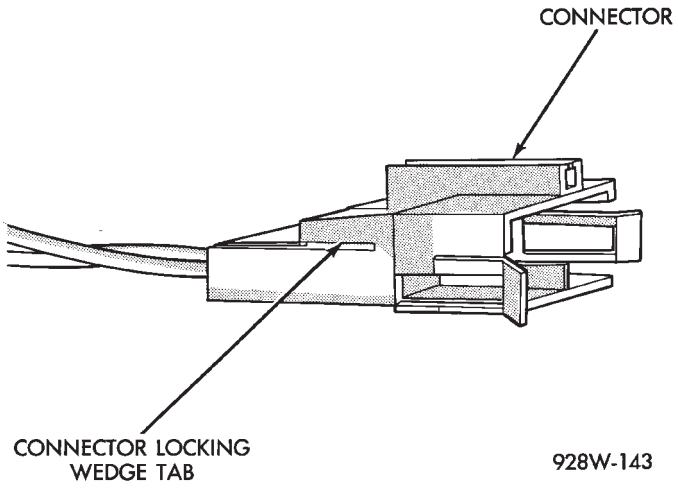

Fig. 14 Connector Locking Wedge Tab (Typical)

(5) Reset the terminal locking tang, if it has one.

(6) Insert the removed wire in the same cavity on the repair connector.

(7) Repeat steps four through six for each wire in the connector, being sure that all wires are inserted into the proper cavities. For additional connector pin-out identification, refer to the wiring diagrams.

(8) Insert the connector locking wedge into the repaired connector, if required.

(9) Connect connector to its mating half/component.

(10) Connect battery and test all affected systems.

CONNECTOR AND TERMINAL REPLACEMENT

(1) Disconnect battery.

(2) Disconnect the connector (that is to be repaired) from its mating half/component.

(3) Cut off the existing wire connector directly behind the insulator. Remove six inches of tape from the harness.

(4) Stagger cut all wires on the harness side at 1/2 inch intervals (Fig. 17).

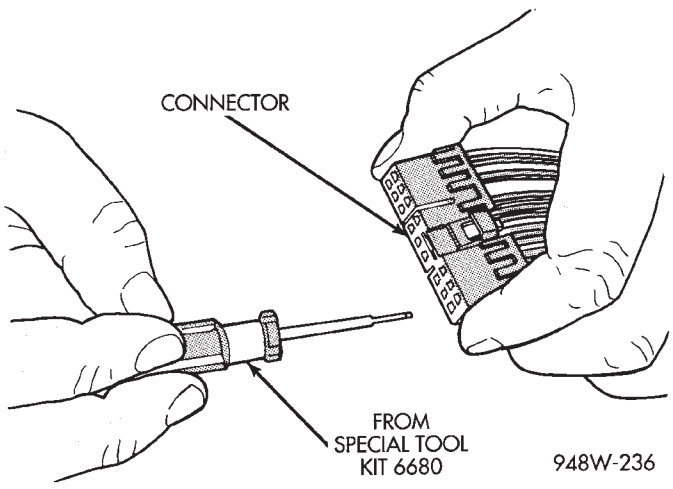

Fig. 15 Terminal Removal

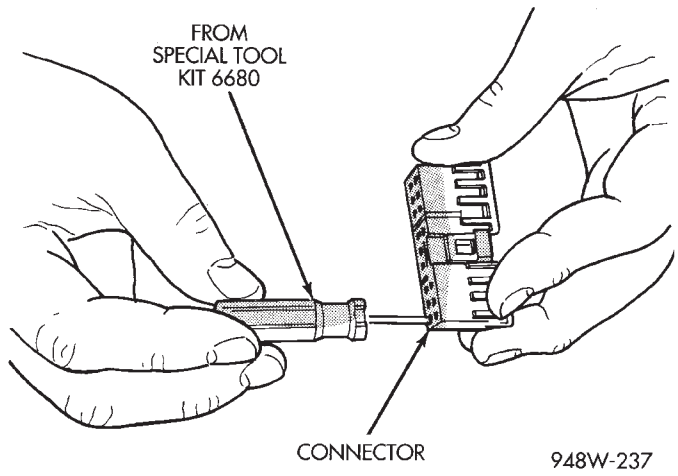

Fig. 16 Terminal Removal Using Special Tool

(5) Remove 1 inch of insulation from each wire on the harness side.

(6) Stagger cut the matching wires on the repair connector assembly in the opposite order as was done on the harness side of the repair. Allow extra length for soldered connections. Check that the overall length is the same as the original (Fig. 17).

(7) Remove 1 inch of insulation from each wire.

(8) Place a piece of heat shrink tubing over one side of the wire. Be sure the tubing will be long enough to cover and seal the entire repair area.

(9) Spread the strands of the wire apart on each part of the exposed wires (Fig. 11 example 1).

(10) Push the two ends of wire together until the strands of wire are close to the insulation (Fig. 11 example 2).

(11) Twist the wires together (Fig. 11 example 3).

(12) Solder the connection together using rosin core type solder only. **Do not use acid core solder.**

(13) Center the heat shrink tubing over the joint and heat using a heat gun. Heat the joint until the tubing is tightly sealed and sealant comes out of both ends of the tubing.

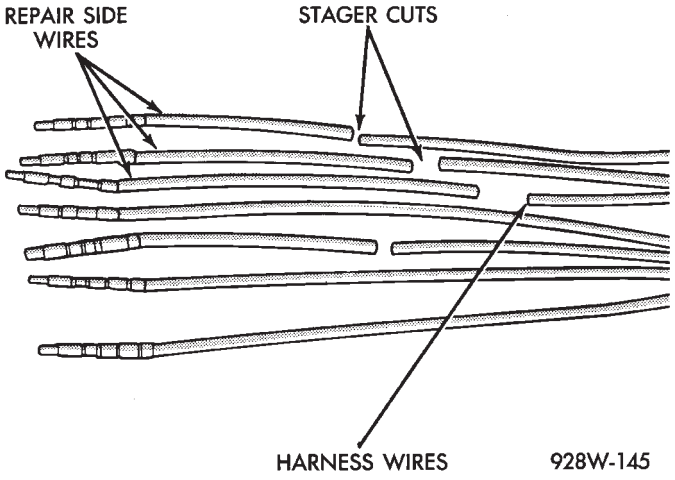

Fig. 17 Stagger Cutting Wires (Typical)

(14) Repeat steps 8 through 13 for each wire.

(15) Re-tape the wire harness starting 1-1/2 inches behind the connector and 2 inches past the repair.

(16) Re-connect the repaired connector.

(17) Connect the battery, and test all affected systems.

TERMINAL REPLACEMENT

(1) Disconnect battery.

(2) Disconnect the connector being repaired from its mating half.

(3) Remove connector locking wedge, if required (Fig. 14).

(4) Position the connector locking finger away from the terminal using the proper pick from special tool kit 6680. Pull on the wire to remove the terminal from the connector (Figs. 15 and 16).

(5) Cut the wire 6 inches from the back of the connector.

(6) Remove 1 inch of insulation from the wire on the harness side.

(7) Select a wire from the terminal repair assembly that best matches the color wire being repaired.

(8) Cut the repair wire to the proper length and remove 1 inch of insulation.

(9) Place a piece of heat shrink tubing over one side of the wire. Make sure the tubing will be long enough to cover and seal the entire repair area.

(10) Spread the strands of the wire apart on each part of the exposed wires (Fig. 11 example 1).

(11) Push the two ends of wire together until the strands of wire are close to the insulation (Fig. 11 example 2).

(12) Twist the wires together (Fig. 11 example 3).

(13) Solder the connection together using rosin core type solder only. **Do not use acid core solder.**

(14) Center the heat shrink tubing over the joint and heat using a heat gun. Heat the joint until the tubing is tightly sealed and sealant comes out of both ends of the tubing.

(15) Insert the repaired wire into the connector.

(16) Install the connector locking wedge, if required, and reconnect the connector to its mating half/component.

(17) Re-tape the wire harness starting 1-1/2 inches behind the connector and 2 inches past the repair.

(18) Connect the battery, and test all affected systems.

DIODE REPLACEMENT

(1) Disconnect the battery.

(2) Locate the diode in the harness, and remove the protective covering.

(3) Remove the diode from the harness, pay attention to the current flow direction (Fig. 18).

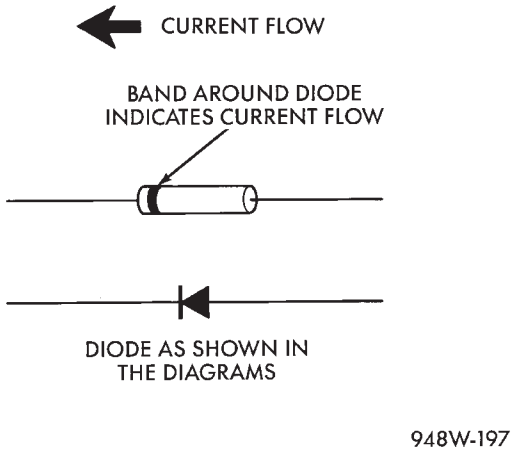

Fig. 18 Diode Identification

(4) Remove the insulation from the wires in the harness. Only remove enough insulation to solder in the new diode.

(5) Install the new diode in the harness, making sure current flow is correct. If necessary, refer to the appropriate wiring diagram for current flow.

(6) Solder the connection together using rosin core type solder only. **Do not use acid core solder.**

(7) Tape the diode to the harness using electrical tape. Make sure the diode is completely sealed from the elements.

(8) Re-connect the battery, and test affected systems.

WIRING DIAGRAMS

CONTENTS

page

8W-01 GENERAL INFORMATION—WIRING DIAGRAMS 8W-01-1
8W-10 FUSE/FUSE BLOCK 8W-10-1
8W-11 POWER DISTRIBUTION 8W-11-1
8W-15 GROUND DISTRIBUTION 8W-15-1
8W-20 CHARGING SYSTEM 8W-20-1
8W-21 STARTING SYSTEM 8W-21-1
8W-30 FUEL/IGNITION 8W-30-1
8W-31 TRANSMISSION CONTROLS 8W-31-1
8W-32 ANTI-LOCK BRAKES 8W-32-1
8W-33 VEHICLE SPEED CONTROL 8W-33-1
8W-40 INSTRUMENT CLUSTER 8W-40-1
8W-41 HORN/CIGAR LIGHTER 8W-41-1
8W-42 AIR CONDITIONING/HEATER 8W-42-1
8W-44 INTERIOR LIGHTING 8W-44-1
8W-47 AUDIO SYSTEM 8W-47-1

page

8W-48 HEATED REAR WINDOW 8W-48-1
8W-49 OVERHEAD CONSOLE 8W-49-1
8W-50 FRONT LIGHTING 8W-50-1
8W-51 REAR LIGHTING 8W-51-1
8W-52 TURN SIGNALS 8W-52-1
8W-53 WIPERS 8W-53-1
8W-54 TRAILER TOW 8W-54-1
8W-60 POWER WINDOWS 8W-60-1
8W-61 POWER DOOR LOCKS 8W-61-1
8W-62 POWER MIRRORS 8W-62-1
8W-63 POWER SEAT 8W-63-1
8W-70 SPLICE INFORMATION 8W-70-1
8W-80 CONNECTOR PIN OUTS 8W-80-1
8W-90 CONNECTOR LOCATIONS 8W-90-1
8W-95 SPLICE LOCATIONS 8W-95-1

HOW TO USE THIS GROUP

The purpose of this group is to show the electrical circuits in a clear, simple fashion and to make troubleshooting easier. Components that work together are shown together. All electrical components used in a specific system are shown on one diagram. The feed for a system is shown at the top of the page. All wires, connectors, splices, and components are shown in the flow of current to the bottom of the page. Wiring which is not part of the circuit represented is referenced to another page/section, where the complete circuit is shown. In addition, all switches, components, and modules are shown in the **at rest position with the doors closed and the key removed from the ignition.**

If a component is part of several different circuits, it is shown in the diagram for each. For example, the headlamp switch is the main part of the exterior lighting, but it also affects the interior lighting and the chime warning system.

It is important to realize that no attempt is made on the diagrams to represent components and wiring as they appear on the vehicle. For example, a short piece of wire is treated the same as a long one. In addition, switches and other components are shown as simply as possible, with regard to function only.

The wiring diagram show circuits for all wheelbases. If there is a difference in systems or components between wheel-bases, an identifier is placed next to the component.

SECTION IDENTIFICATION

Sections in Group 8W are organized by sub-systems. The sections contain circuit operation descriptions, helpful information, and system diagrams. The intention is to organize information by system, consistently from year to year.

CONNECTOR LOCATIONS

Section 8W-90 contains Connector Location illustrations. The illustrations contain the connector number and component identification. Connector Location charts in Section 8W-90 reference the illustration number for components and connectors.

Section 8W-80 shows each connector and the circuits involved with that connector. The connectors are identified using the number on the Diagram pages.

SPLICE LOCATIONS

Splice Location charts in Section 8W-70 show the entire splice, and provide references to other sections the splice serves.

Section 8W-95 contains illustrations that show the general location of the splices in each harness. The illustrations show the splice by number, and provide a written location.

FUSE/FUSE BLOCK

GENERAL INFORMATION

This section covers the Fuse Block and all circuits involved with it. For additional information on system operation, refer to the appropriate section of the wiring diagrams.

DIAGRAM INDEX

Component	Page
ABS Control Module	8W-10-4
ABS Warning Lamp Relay	8W-10-2
Chime/Buzzer Module	8W-10-2, 9, 10
Circuit Breaker Cavity 16	8W-10-12
In-Line Circuit Breaker (Wipers)	8W-10-5
In-Line Circuit Breaker (Stop Lamp Relay)	8W-10-12
Daytime Running Lamps Module	8W-10-8
Fuse 1 (Fuse Block)	8W-10-4
Fuse 2 (Fuse Block)	8W-10-5
Fuse 3 (Fuse Block)	8W-10-4, 8
Fuse 3 (PDC)	8W-10-6, 12
Fuse 4 (Fuse Block)	8W-10-7
Fuse 5 (Fuse Block)	8W-10-5
Fuse 5 (PDC)	8W-10-7, 10
Fuse 6 (Fuse Block)	8W-10-4
Fuse 6 (PDC)	8W-10-4, 8
Fuse 7 (Fuse Block)	8W-10-4, 10
Fuse 8 (Fuse Block)	8W-10-5
Fuse 9 (Fuse Block)	8W-10-6
Fuse 10 (Fuse Block)	8W-10-4
Fuse 11 (Fuse Block)	8W-10-9
Fuse 11 (PDC)	8W-10-8
Fuse 12 (PDC)	8W-10-8
Fuse 13 (Fuse Block)	8W-10-9
Fuse 14 (Fuse Block)	8W-10-9
Fuse 15 (Fuse Block)	8W-10-7
Fuse 15 (PDC)	8W-10-6
Fuse 17 (Fuse Block)	8W-10-9
Fuse Block	8W-10-2
Headlamp Delay Module	8W-10-9
Headlamp Switch	8W-10-7, 10
Heated Rear Window Relay	8W-10-10
Ignition Switch	8W-10-4, 8
Instrument Cluster	8W-10-11
Overhead Console	8W-10-9, 11
Powertrain Control Module	8W-10-8
Remote Keyless Entry Module	8W-10-9

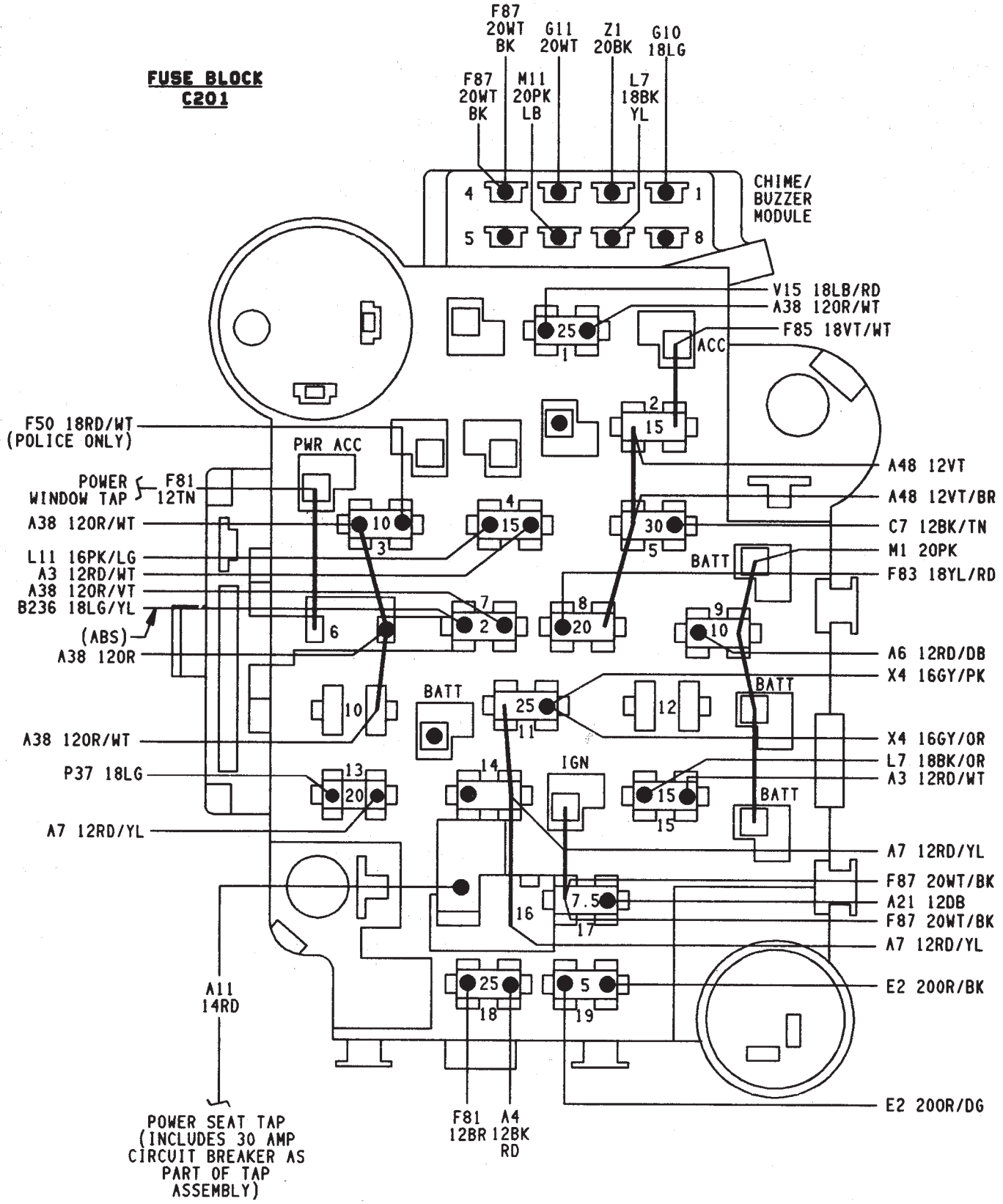
FUSE BLOCK
C201
F87 20WT BK
G11 20WT
Z1 20BK
G10 18LG
F87 20WT BK
M11 20PK LB
L7 18BK YL
CHIME/ BUZZER MODULE
V15 18LB/RD
A38 120R/WT
F85 18VT/WT
ACC
F50 18RD/WT (POLICE ONLY)
PWR ACC
POWER WINDOW TAP
F81 12TN
A38 120R/WT
L11 16PK/LG
A3 12RD/WT
A38 120R/VT
B236 18LG/YL
(ABS)
A38 120R
A48 12VT
A48 12VT/BR
C7 12BK/TN
M1 20PK
BATT
F83 18YL/RD
A6 12RD/DB
X4 16GY/PK
BATT
BATT
A38 120R/WT
X4 16GY/OR
L7 18BK/OR
A3 12RD/WT
P37 18LG
IGN
BATT
A7 12RD/YL
A7 12RD/YL
F87 20WT/BK
A21 12DB
F87 20WT/BK
A7 12RD/YL
A11 14RD
E2 200R/BK
E2 200R/DG
POWER SEAT TAP (INCLUDES 30 AMP CIRCUIT BREAKER AS PART OF TAP ASSEMBLY)
F81 12BR
A4 12BK RD

J958W-7

FUSE NUMBER	AMPS	COLOR	SHEET
1	25	WHITE	8W-10-4
2	15	LIGHT BLUE	8W-10-5
3	10	RED	8W-10-4
4	15	LIGHT BLUE	8W-10-7
5	30	GREEN	8W-10-5
6	30	C.B.	8W-10-4
7	2	PINK	8W-10-4
8	20	YELLOW	8W-10-5
9	10	RED	8W-10-6
10	—	—	—
11	25	WHITE	8W-10-9
12	—	—	—
13	20	YELLOW	8W-10-9
14	—	—	—
15	15	LIGHT BLUE	8W-10-7
16	30	C.B.	8W-10-12
17	7.5	BROWN	8W-10-9
18	25	WHITE	8W-10-10
19	5	TAN	8W-10-10

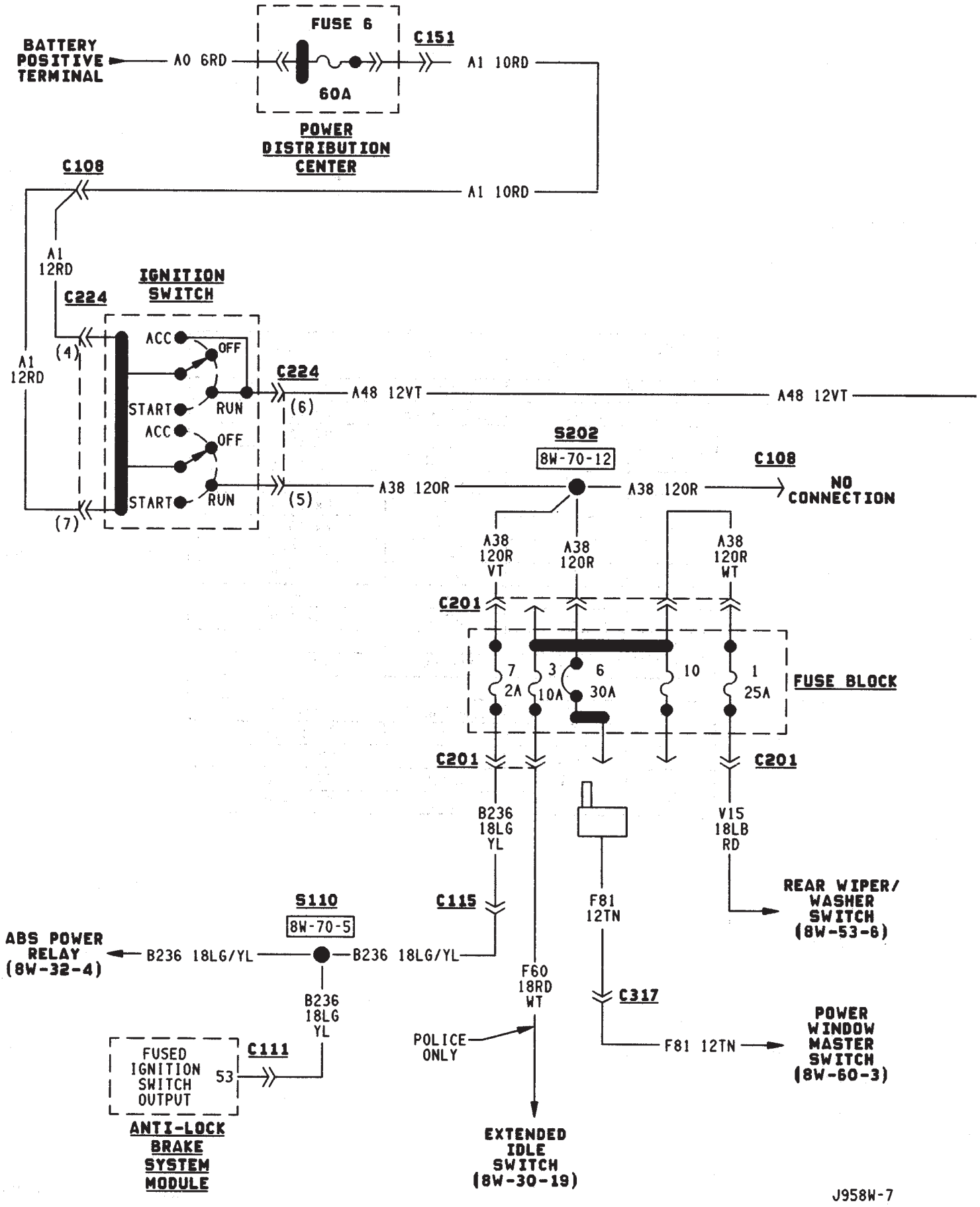
BATTERY POSITIVE TERMINAL
A0 6RD
FUSE 6
60A
C151
A1 10RD
POWER DISTRIBUTION CENTER
C108
A1 10RD
A1 12RD
IGNITION SWITCH
C224
ACC
OFF
START
RUN
(4)
(6)
(5)
(7)
A48 12VT
A48 12VT
A38 120R
S202
8W-70-12
C108
NO CONNECTION
A38 120R VT
A38 120R
A38 120R WT
C201
7 2A
3 10A
6 30A
10
1 25A
FUSE BLOCK
C201
C201
B236 18LG YL
V15 18LB RD
REAR WIPER/ WASHER SWITCH (8W-53-6)
S110
8W-70-5
C115
F81 12TN
ABS POWER RELAY (8W-32-4)
B236 18LG/YL
B236 18LG/YL
B236 18LG YL
F60 18RD WT
C317
POLICE ONLY
F81 12TN
POWER WINDOW MASTER SWITCH (8W-60-3)
FUSED IGNITION SWITCH OUTPUT
53
C111
ANTI-LOCK BRAKE SYSTEM MODULE
EXTENDED IDLE SWITCH (8W-30-19)
J958W-7

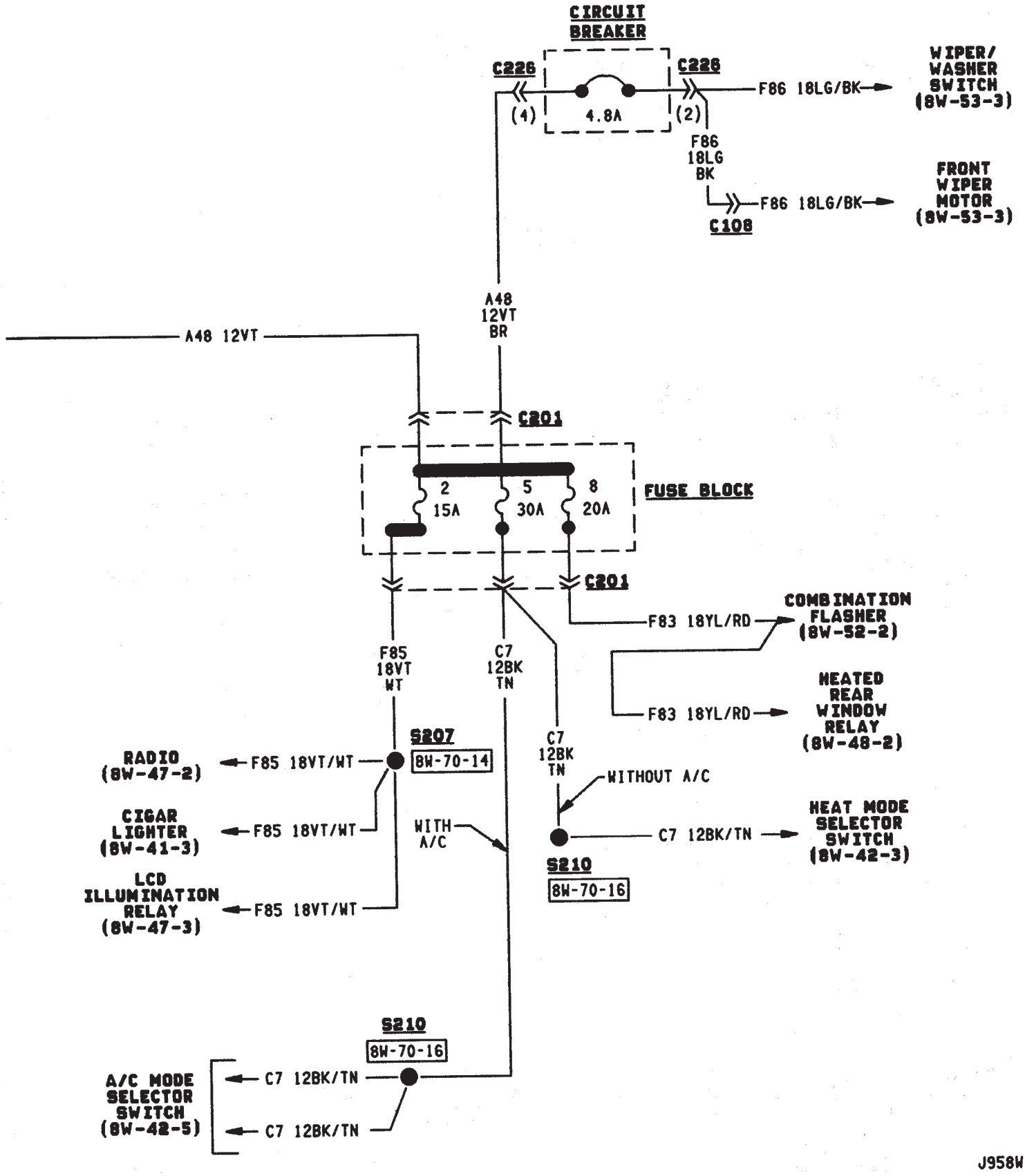
CIRCUIT BREAKER
C226
C226
(4)
4.8A
(2)
F86 18LG/BK
WIPER/ WASHER SWITCH (8W-53-3)
F86 18LG BK
F86 18LG/BK
C108
FRONT WIPER MOTOR (8W-53-3)
A48 12VT BR
A48 12VT
C201
2 15A
5 30A
8 20A
FUSE BLOCK
C201
COMBINATION FLASHER (8W-52-2)
F83 18YL/RD
F85 18VT WT
C7 12BK TN
F83 18YL/RD
HEATED REAR WINDOW RELAY (8W-48-2)
S207
8W-70-14
RADIO (8W-47-2)
F85 18VT/WT
C7 12BK TN
WITHOUT A/C
CIGAR LIGHTER (8W-41-3)
F85 18VT/WT
WITH A/C
C7 12BK/TN
HEAT MODE SELECTOR SWITCH (8W-42-3)
LCD ILLUMINATION RELAY (8W-47-3)
F85 18VT/WT
S210
8W-70-16
S210
8W-70-16
A/C MODE SELECTOR SWITCH (8W-42-5)
C7 12BK/TN
C7 12BK/TN

J958W-7

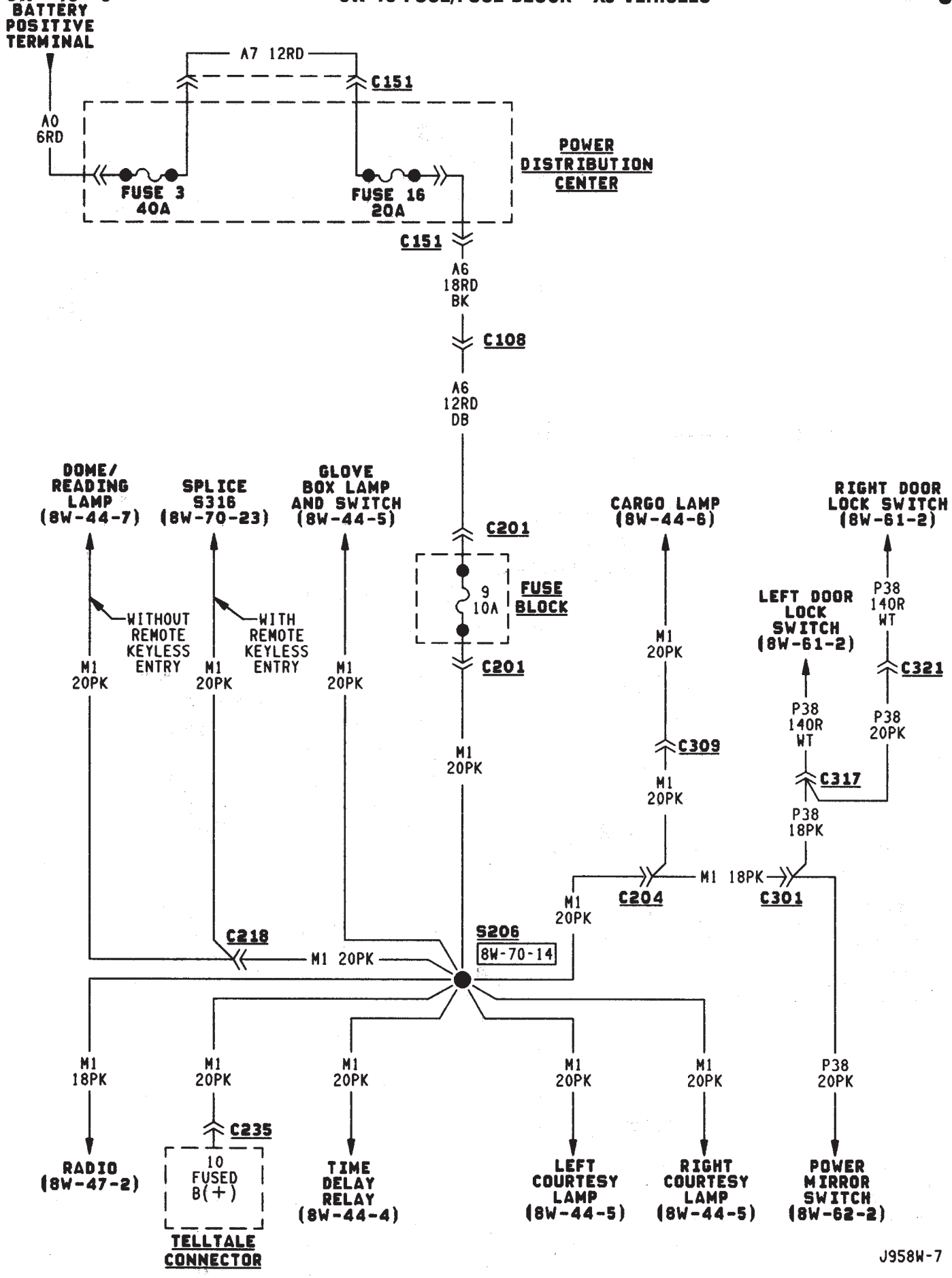
BATTERY POSITIVE TERMINAL
A0 6RD
A7 12RD
C151
FUSE 3 40A
FUSE 16 20A
POWER DISTRIBUTION CENTER
C151
A6 18RD BK
C108
A6 12RD DB
C201
9 10A
FUSE BLOCK
C201
M1 20PK
DOME/ READING LAMP (8W-44-7)
WITHOUT REMOTE KEYLESS ENTRY
SPLICE S316 (8W-70-23)
WITH REMOTE KEYLESS ENTRY
GLOVE BOX LAMP AND SWITCH (8W-44-5)
CARGO LAMP (8W-44-6)
C309
RIGHT DOOR LOCK SWITCH (8W-61-2)
P38 140R WT
C321
LEFT DOOR LOCK SWITCH (8W-61-2)
P38 140R WT
C317
P38 20PK
P38 18PK
M1 18PK
C204
C301
C218
S206
8W-70-14
M1 18PK
M1 20PK
C235
10 FUSED B(+)
TELLTALE CONNECTOR
RADIO (8W-47-2)
TIME DELAY RELAY (8W-44-4)
LEFT COURTESY LAMP (8W-44-5)
RIGHT COURTESY LAMP (8W-44-5)
POWER MIRROR SWITCH (8W-62-2)
J958W-7

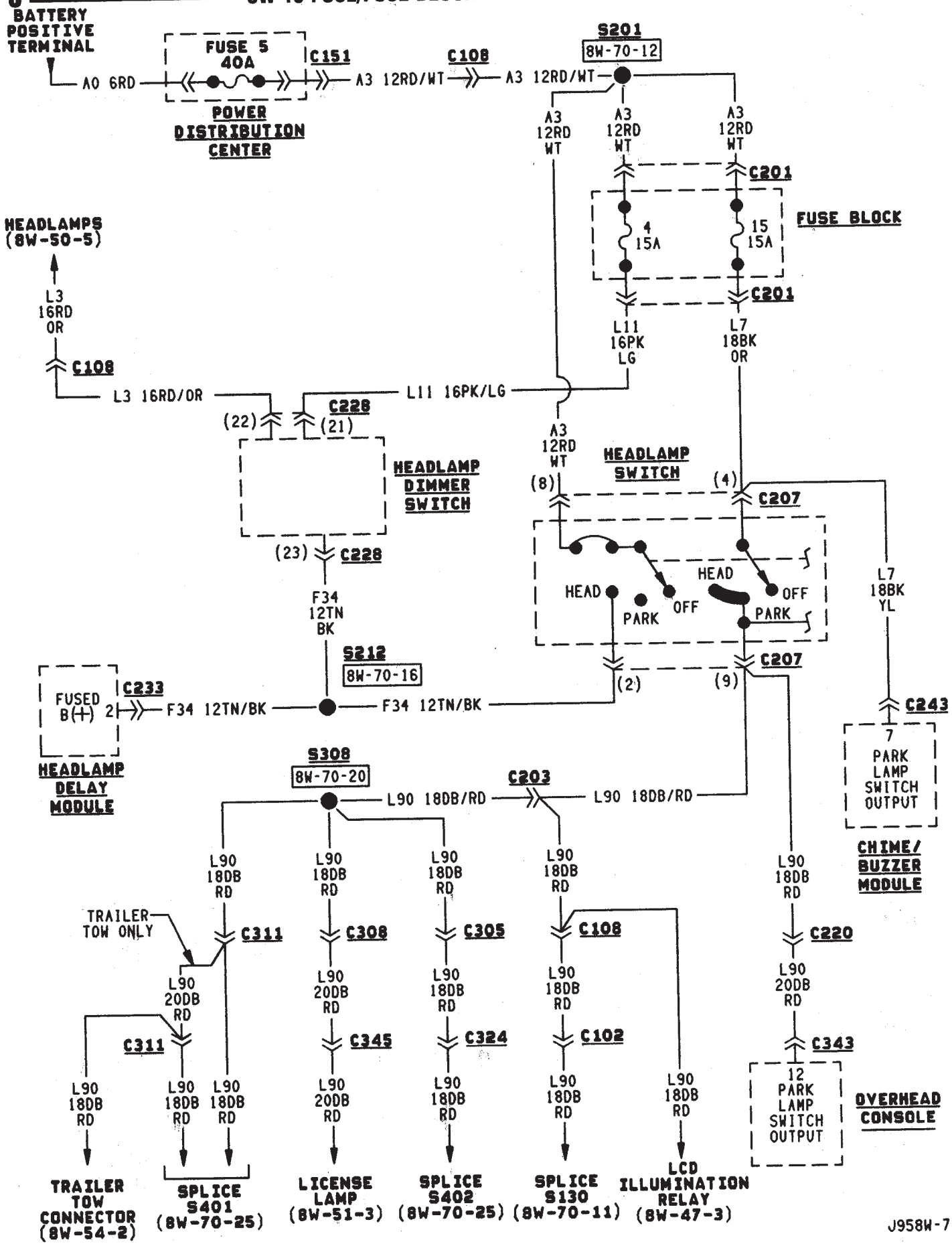
BATTERY POSITIVE TERMINAL
A0 6RD
FUSE 5 40A
C151
POWER DISTRIBUTION CENTER
A3 12RD/WT
C108
A3 12RD/WT
S201
8W-70-12
A3 12RD WT
A3 12RD WT
A3 12RD WT
C201
4 15A
15 15A
FUSE BLOCK
C201
L11 16PK LG
L7 18BK OR
HEADLAMPS (8W-50-5)
L3 16RD OR
C108
L3 16RD/OR
L11 16PK/LG
C228
(22)
(21)
HEADLAMP DIMMER SWITCH
(23)
C228
F34 12TN BK
A3 12RD WT
HEADLAMP SWITCH
(8)
(4)
C207
HEAD
OFF
PARK
HEAD
OFF
PARK
L7 18BK YL
C207
(2)
(9)
S212
8W-70-16
FUSED B(+) 2
C233
F34 12TN/BK
F34 12TN/BK
C243
7
PARK LAMP SWITCH OUTPUT
CHIME/ BUZZER MODULE
HEADLAMP DELAY MODULE
S308
8W-70-20
L90 18DB/RD
C203
L90 18DB/RD
L90 18DB RD
L90 18DB RD
L90 18DB RD
L90 18DB RD
L90 18DB RD
TRAILER TOW ONLY
C311
C308
C305
C108
C220
L90 20DB RD
L90 18DB RD
L90 18DB RD
L90 20DB RD
C311
C345
C324
C102
C343
L90 18DB RD
L90 18DB RD
L90 18DB RD
L90 20DB RD
L90 18DB RD
L90 18DB RD
L90 18DB RD
12
PARK LAMP SWITCH OUTPUT
OVERHEAD CONSOLE
TRAILER TOW CONNECTOR (8W-54-2)
SPLICE S401 (8W-70-25)
LICENSE LAMP (8W-51-3)
SPLICE S402 (8W-70-25)
SPLICE S130 (8W-70-11)
LCD ILLUMINATION RELAY (8W-47-3)
J958W-7

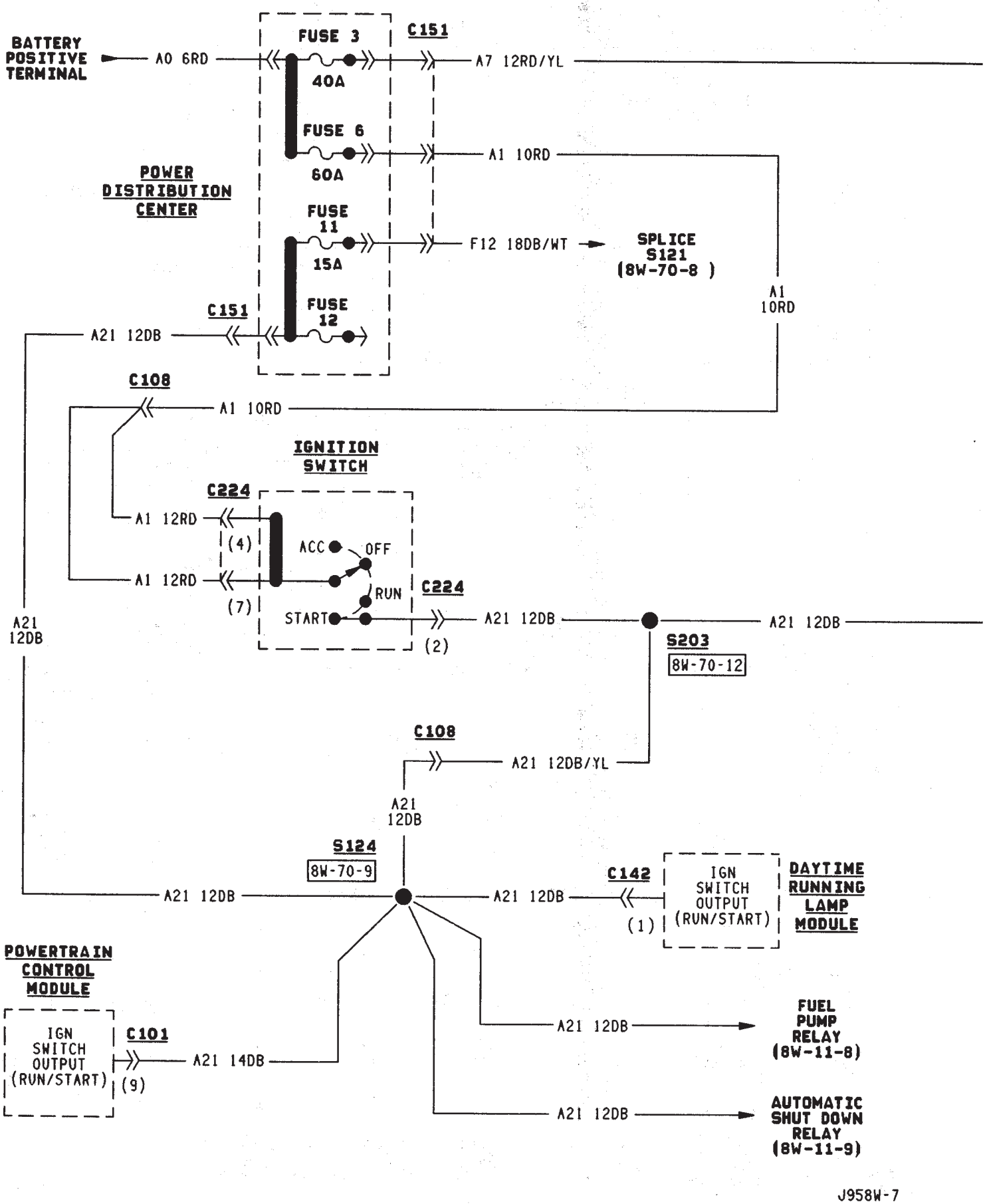
BATTERY POSITIVE TERMINAL
A0 6RD
FUSE 3
40A
C151
A7 12RD/YL
FUSE 6
60A
A1 10RD
POWER DISTRIBUTION CENTER
FUSE 11
15A
F12 18DB/WT
SPLICE S121 (8W-70-8)
A1 10RD
C151
FUSE 12
A21 12DB
C108
A1 10RD
IGNITION SWITCH
C224
A1 12RD
(4)
ACC
OFF
A1 12RD
(7)
RUN
START
C224
A21 12DB
(2)
A21 12DB
A21 12DB
S203
8W-70-12
C108
A21 12DB/YL
A21 12DB
S124
8W-70-9
A21 12DB
A21 12DB
C142
IGN SWITCH OUTPUT (RUN/START)
(1)
DAYTIME RUNNING LAMP MODULE
POWERTRAIN CONTROL MODULE
IGN SWITCH OUTPUT (RUN/START)
C101
A21 14DB
(9)
A21 12DB
FUEL PUMP RELAY (8W-11-8)
A21 12DB
AUTOMATIC SHUT DOWN RELAY (8W-11-9)
J958W-7

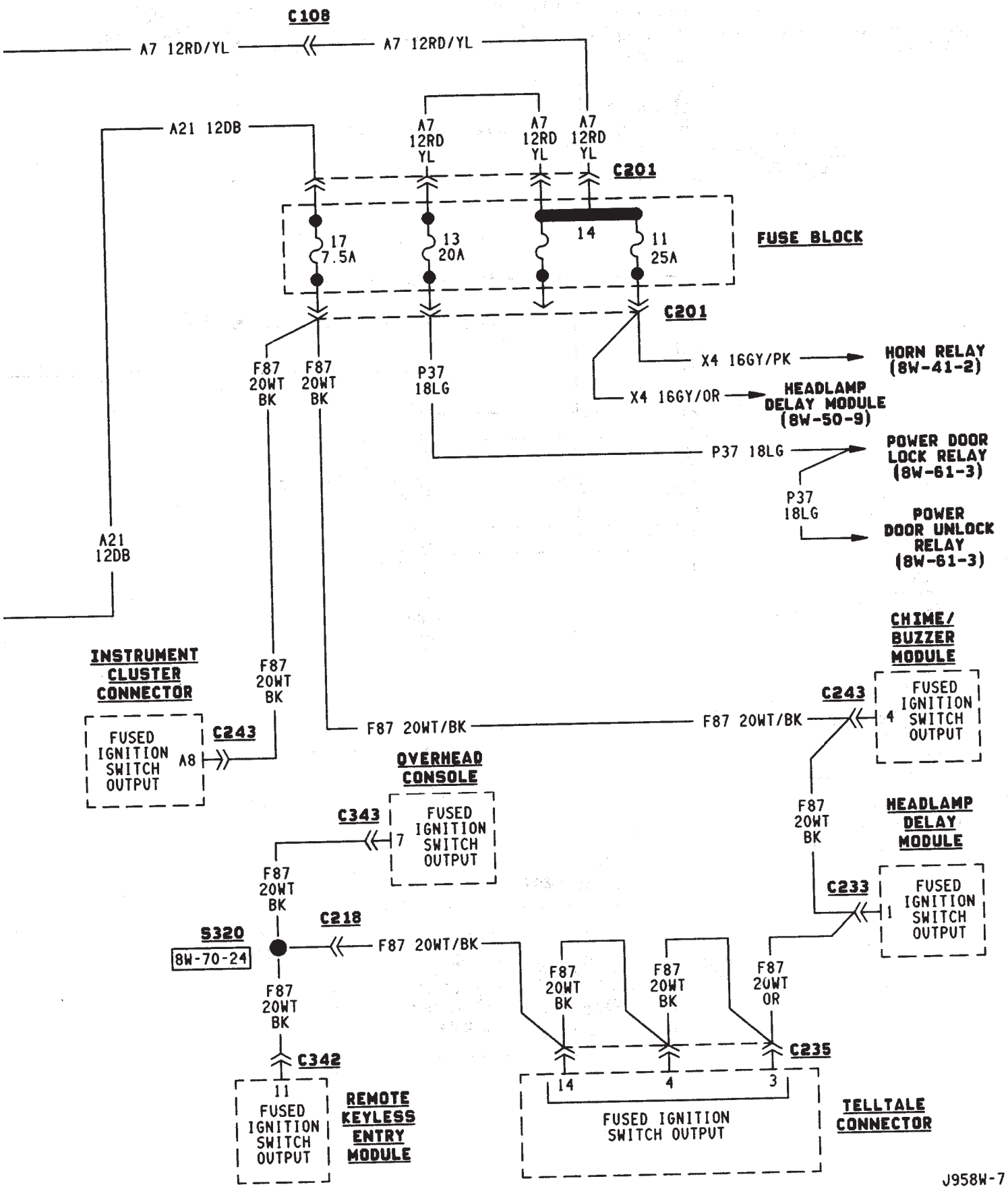
C108
A7 12RD/YL
A7 12RD/YL
A21 12DB
A7 12RD YL
A7 12RD YL
A7 12RD YL
C201
17 7.5A
13 20A
14
11 25A
FUSE BLOCK
C201
F87 20WT BK
F87 20WT BK
P37 18LG
X4 16GY/PK
HORN RELAY (8W-41-2)
X4 16GY/OR
HEADLAMP DELAY MODULE (8W-50-9)
P37 18LG
POWER DOOR LOCK RELAY (8W-61-3)
P37 18LG
POWER DOOR UNLOCK RELAY (8W-61-3)
A21 12DB
INSTRUMENT CLUSTER CONNECTOR
FUSED IGNITION SWITCH OUTPUT
A8
C243
F87 20WT BK
F87 20WT/BK
F87 20WT/BK
C243
4
FUSED IGNITION SWITCH OUTPUT
CHIME/ BUZZER MODULE
OVERHEAD CONSOLE
C343
7
FUSED IGNITION SWITCH OUTPUT
F87 20WT BK
HEADLAMP DELAY MODULE
C233
1
FUSED IGNITION SWITCH OUTPUT
F87 20WT BK
C218
S320
8W-70-24
F87 20WT/BK
F87 20WT BK
F87 20WT BK
F87 20WT BK
F87 20WT OR
C342
11
FUSED IGNITION SWITCH OUTPUT
REMOTE KEYLESS ENTRY MODULE
C235
14
4
3
FUSED IGNITION SWITCH OUTPUT
TELLTALE CONNECTOR
J958W-7

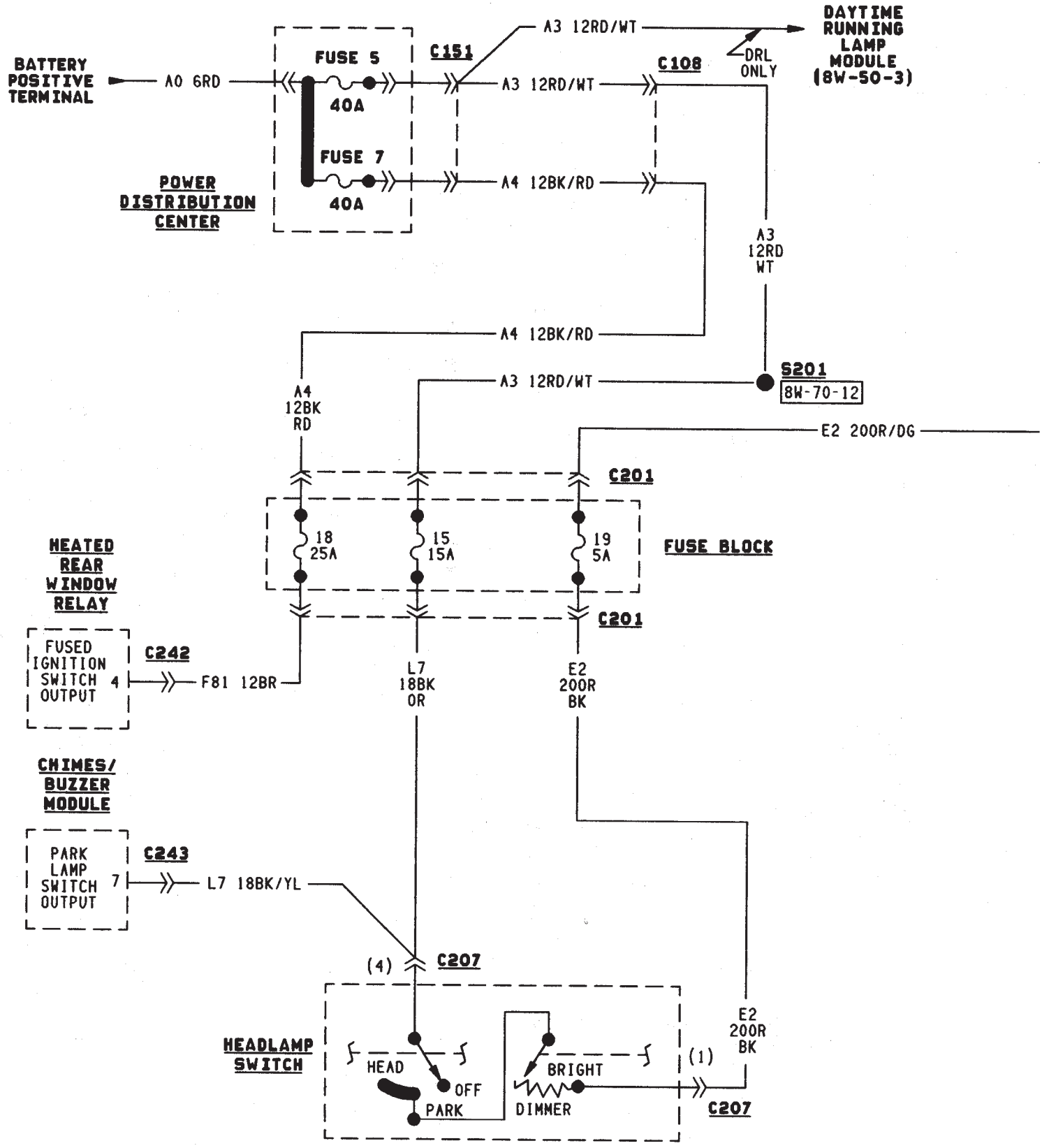
BATTERY POSITIVE TERMINAL
A0 6RD
FUSE 5
40A
FUSE 7
40A
POWER DISTRIBUTION CENTER
C151
A3 12RD/WT
C108
DRL ONLY
DAYTIME RUNNING LAMP MODULE (8W-50-3)
A4 12BK/RD
A3 12RD WT
S201
8W-70-12
A4 12BK RD
E2 200R/DG
C201
18 25A
15 15A
19 5A
FUSE BLOCK
HEATED REAR WINDOW RELAY
FUSED IGNITION SWITCH OUTPUT
4
C242
F81 12BR
L7 18BK OR
E2 200R BK
CHIMES/ BUZZER MODULE
PARK LAMP SWITCH OUTPUT
7
C243
L7 18BK/YL
(4)
C207
HEADLAMP SWITCH
HEAD
OFF
PARK
BRIGHT
DIMMER
(1)
E2 200R BK
C207

J958W-7

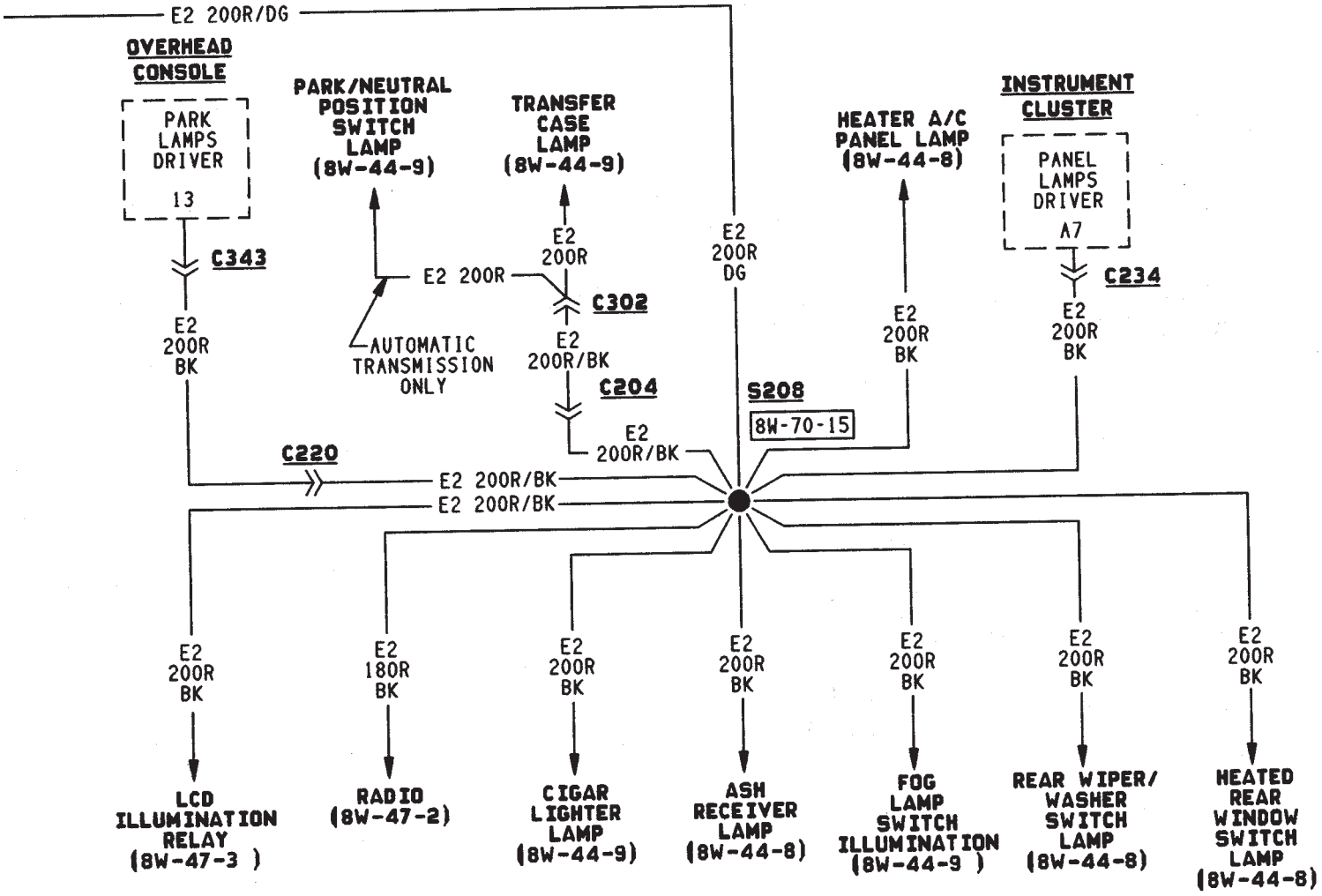
E2 200R/DG
OVERHEAD CONSOLE
PARK LAMPS DRIVER 13
C343
E2 200R BK
PARK/NEUTRAL POSITION SWITCH LAMP (8W-44-9)
AUTOMATIC TRANSMISSION ONLY
TRANSFER CASE LAMP (8W-44-9)
E2 200R
C302
E2 200R/BK
C204
E2 200R/BK
E2 200R DG
HEATER A/C PANEL LAMP (8W-44-8)
E2 200R BK
INSTRUMENT CLUSTER
PANEL LAMPS DRIVER A7
C234
E2 200R BK
S208
8W-70-15
C220
E2 200R/BK
E2 200R/BK
E2 200R BK
LCD ILLUMINATION RELAY (8W-47-3)
E2 180R BK
RADIO (8W-47-2)
E2 200R BK
CIGAR LIGHTER LAMP (8W-44-9)
E2 200R BK
ASH RECEIVER LAMP (8W-44-8)
E2 200R BK
FOG LAMP SWITCH ILLUMINATION (8W-44-9)
E2 200R BK
REAR WIPER/ WASHER SWITCH LAMP (8W-44-8)
E2 200R BK
HEATED REAR WINDOW SWITCH LAMP (8W-44-8)

J958W-7

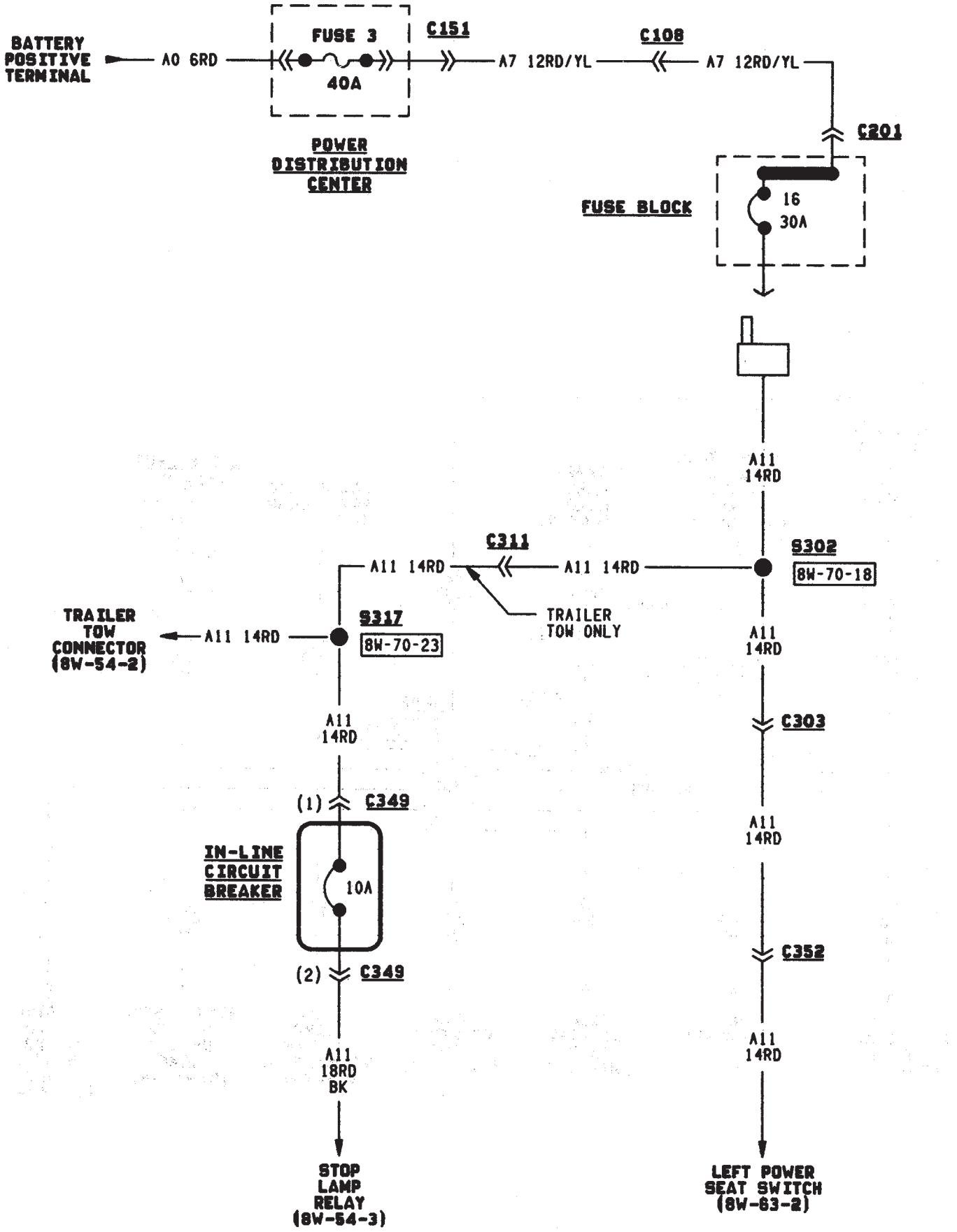
BATTERY POSITIVE TERMINAL
A0 6RD
FUSE 3
40A
C151
A7 12RD/YL
C108
A7 12RD/YL
C201
POWER DISTRIBUTION CENTER
FUSE BLOCK
16
30A
A11 14RD
C311
A11 14RD
A11 14RD
S302
8W-70-18
TRAILER TOW ONLY
TRAILER TOW CONNECTOR (8W-54-2)
A11 14RD
S317
8W-70-23
A11 14RD
A11 14RD
C303
(1)
C349
IN-LINE CIRCUIT BREAKER
10A
A11 14RD
C352
(2)
C349
A11 18RD BK
A11 14RD
STOP LAMP RELAY (8W-54-3)
LEFT POWER SEAT SWITCH (8W-63-2)

J958W-7

POWER DISTRIBUTION

GENERAL INFORMATION

This section covers the Power Distribution Center (PDC) and all circuits involved with it. For additional information on system operation, refer to the appropriate section of the wiring diagrams.

DIAGRAM INDEX

Component	Page
A/C Compressor Clutch Relay	8W-11-3, 11
ABS Control Module	8W-11-6, 7
ABS Power Relay	8W-11-3, 6
ABS Pump Motor Relay	8W-11-3, 7
Automatic Shut Down Relay	8W-11-3, 9
Chime/Buzzer Module	8W-11-10, 14
Circuit Breaker Cavity 16 (Fuse Block)	8W-11-13
Combination Flasher	8W-11-17
Daytime Running Lamp Module	8W-11-5, 10
Diode D101	8W-11-6
Engine Starter Motor Relay	8W-11-3, 4
Fuel Pump Relay	8W-11-3, 8
Fuse 1 (PDC)	8W-11-13
Fuse 3 (PDC)	8W-11-12
Fuse 4 (Fuse Block)	8W-11-14
Fuse 4 (PDC)	8W-11-15
Fuse 5 (PDC)	8W-11-14
Fuse 6 (PDC)	8W-11-4, 7, 10, 15
Fuse 7 (Fuse Block)	8W-11-7
Fuse 7 (PDC)	8W-11-4
Fuse 8 (PDC)	8W-11-7
Fuse 9 (Fuse Block)	8W-11-12
Fuse 9 (PDC)	8W-11-13
Fuse 10 (PDC)	8W-11-6, 8
Fuse 11 (Fuse Block)	8W-11-13
Fuse 11 (PDC)	8W-11-10
Fuse 12 (PDC)	8W-11-15
Fuse 13 (PDC)	8W-11-4
Fuse 14 (PDC)	8W-11-8
Fuse 15 (Fuse Block)	8W-11-14
Fuse 15 (PDC)	8W-11-8
Fuse 16 (PDC)	8W-11-12
Fuse 17 (Fuse Block)	8W-11-10
Headlamp Delay Module	8W-11-10, 14
Headlamp Switch	8W-11-14
Headlamp Dimmer Switch	8W-11-14
Horn Rear Window Relay	8W-11-17
Horn Relay	8W-11-17
Ignition Switch	8W-11-4, 7, 10, 15
In-Line Circuit Breaker (Stop Lamp Relay)	8W-11-13
LCD Illumination Relay	8W-11-17
Overhead Console	8W-11-10, 14
Powertrain Control Module	8W-11-4, 5, 8, 9, 11
Power Distribution Center	8W-11-2
Power Door Lock Relay	8W-11-16
Power Door Unlock Relay	8W-11-16
Radiator Fan Control Relay	8W-11-3, 11
Remote Keyless Entry Module	8W-11-10, 12
Relay Center	8W-11-16
Telltale Connector (I.P. Cluster)	8W-11-6, 10, 12
Torque Converter Clutch (TCC) Relay	8W-11-15
Transmission Control Module	8W-11-5, 8

POWER DISTRIBUTION CENTER

C151

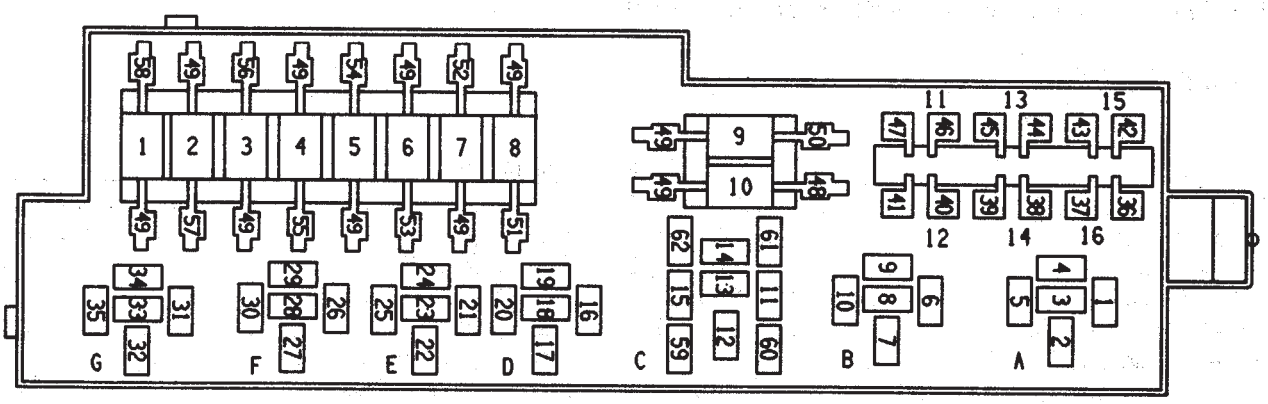

FUSE	FUSED CIRCUIT	FEED CIRCUIT	AMPS	SHEET
1	A11 10BK/WT	A0 6RD	60	8W-11-13
2	A14 14RD (2)		30	8W-11-8
3	A7 12RD/YL (2)		40	8W-11-12
4	L9 18BK/WT		20	8W-11-15
5	A3 12RD/WT (2)		40	8W-11-14
6	A1 10RD		60	8W-11-4 8W-11-7 8W-11-10 8W-11-15
7	A4 12BK/RD (2)		40	8W-11-4
8	A10 12RD/DG		40	8W-11-7
9	A11 10BK/WT		60	8W-11-13
10	A20 14RD/DG		30	8W-11-6
11	F12 18DB/WT	A21 12DB	15	8W-11-10
12	T17 18YL (2)		10	8W-11-15
13	F39 18PK/LG (2)	A4 14BK/RD	15	8W-11-4
14	A18 18RD/BK	A14 14RD	20	8W-11-8
15	F141 16LG/RD	A14 14RD	20	8W-11-8
16	A6 18RD/BK (2)	A7 12RD/YL	20	8W-11-12

(2)-TWO WIRES

A
RADIATOR FAN
CONTROL RELAY

CAV	CIRCUIT	FUNCTION	SHEET
1	F12 18DB/WT	FUSED IGNITION SWITCH OUTPUT	8W-11-11
2	F141 16LG/RD	FUSED B(+)	8W-11-11
4	C25 16LG	RADIATOR FAN RELAY OUTPUT	8W-11-11
5	C27 20DB/PK	RADIATOR FAN RELAY CONTROL	8W-11-11

B
FUEL PUMP
RELAY

CAV	CIRCUIT	FUNCTION	SHEET
6	A21 12DB	IGNITION SWITCH OUTPUT (RUN/START)	8W-11-8
7	A14 14RD	FUSED B(+)	8W-11-8
9	A141 14DG/WT	FUEL PUMP RELAY OUTPUT	8W-11-8
9	A141 14DG/WT	FUEL PUMP RELAY OUTPUT	8W-11-8
10	K51 20DB/YL	ASD RELAY CONYROL	8W-11-8

C
ABS PUMP
MOTOR RELAY
(4.0L ONLY)

CAV	CIRCUIT	FUNCTION	SHEET
11	B116 18GY	ABS PUMP MOTOR RELAY CONTROL	8W-11-7
12	A10 14RD/DG	FUSED B(+)	8W-11-7
14	B233 12TN/BK	ABS PUMP/MOTOR RELAY OUTPUT	8W-11-7
15	B235 14GY/YL	ABS POWER RELAY OUTPUT	8W-11-7
60	Z12 14BK/TN	GROUND	8W-11-7

D
A/C COMPRESSOR
CLUTCH RELAY

CAV	CIRCUIT	FUNCTION	SHEET
16	F12 18DB/WT	FUSED IGNITION SWITCH OUTPUT	8W-11-11
17	C90 16LG	A/C PRESSURE SWITCH OUTPUT	8W-11-11
19	C3 14DB/BK	A/C CMP CLUTCH RELAY OUTPUT	8W-11-11
20	C13 20DB/OR	A/C CMP CLUTCH RELAY CONTROL	8W-11-11

E
AUTOMATIC SHUT
DOWN RELAY

CAV	CIRCUIT	FUNCTION	SHEET
21	A21 12DB	IGNITION SWITCH OUTPUT (RUN/START)	8W-11-9
22	A18 18RD/BK	FUSED B(+)	8W-11-9
24	A142 18DG/OR	ASD RELAY OUTPUT	8W-11-9
25	K51 20DB/YL	ASD RELAY CONTROL	8W-11-9
25	K51 20DB/YL	ASD RELAY CONTROL	8W-11-9

F
ENGINE STARTER
RELAY

CAV	CIRCUIT	FUNCTION	SHEET
26	A41 14YL	IGNITION SWITCH OUTPUT (START)	8W-11-4
27	A4 14BK/RD	FUSED B(+)	8W-11-4
27	A4 14BK/RD	FUSED B(+)	8W-11-4
29	T40 14BR	ENGINE STARTER RELAY OUTPUT	8W-11-4
30	T41 18BR/YL	PARK/NEUTRAL POSITION SWITCH SENSE	8W-11-4
30	T41 18BR/YL	PARK/NEUTRAL POSITION SWITCH SENSE	8W-11-4

G
ABS POWER
RELAY
(4.0L ONLY)

CAV	CIRCUIT	FUNCTION	SHEET
31	B236 18LG/YL	FUSED IGNITION SWITCH OUTPUT	8W-11-6
32	B235 14GY/YL	ABS POWER RELAY OUTPUT	8W-11-6
32	B235 14GY/YL	ABS POWER RELAY OUTPUT	8W-11-6
33	Z12 12BK/TN	GROUND	8W-11-6
34	A20 14RD/DG	FUSED B(+)	8W-11-6
35	B207 18PK	ABS POWER RELAY CONTROL	8W-11-6

J958W-7

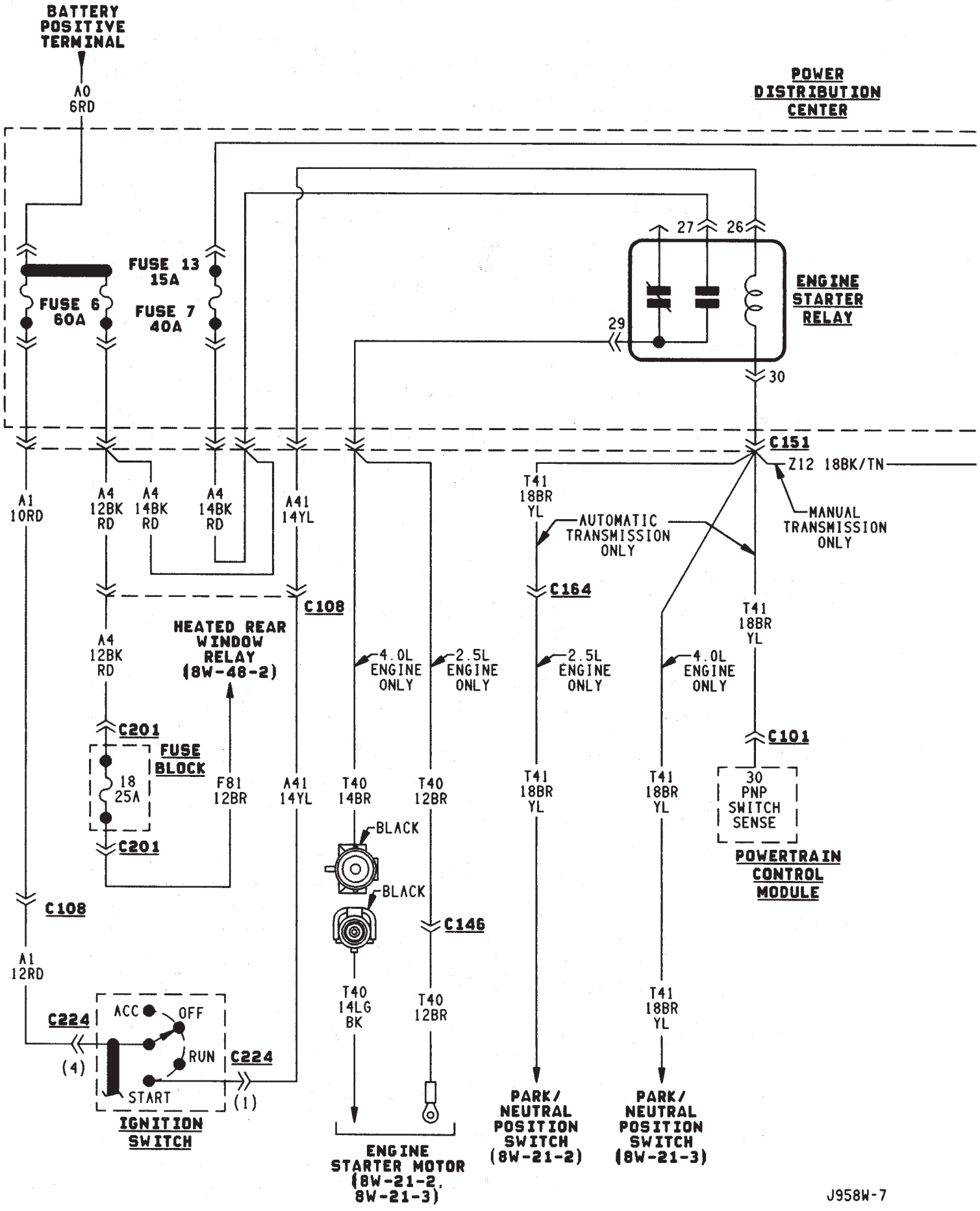
BATTERY POSITIVE TERMINAL
A0 6RD
POWER DISTRIBUTION CENTER
FUSE 13 15A
FUSE 6 60A
FUSE 7 40A
27
26
29
30
ENGINE STARTER RELAY
C151
Z12 18BK/TN
A1 10RD
A4 12BK RD
A4 14BK RD
A4 14BK RD
A41 14YL
T41 18BR YL
AUTOMATIC TRANSMISSION ONLY
MANUAL TRANSMISSION ONLY
C164
C108
HEATED REAR WINDOW RELAY (8W-48-2)
4.0L ENGINE ONLY
2.5L ENGINE ONLY
2.5L ENGINE ONLY
4.0L ENGINE ONLY
T41 18BR YL
C201
FUSE BLOCK
18 25A
F81 12BR
A41 14YL
T40 14BR
T40 12BR
C101
30 PNP SWITCH SENSE
POWERTRAIN CONTROL MODULE
T41 18BR YL
T41 18BR YL
BLACK
BLACK
C146
C108
A1 12RD
C224
ACC
OFF
RUN
START
C224
(4)
(1)
IGNITION SWITCH
T40 14LG BK
T40 12BR
ENGINE STARTER MOTOR (8W-21-2, 8W-21-3)
PARK/ NEUTRAL POSITION SWITCH (8W-21-2)
PARK/ NEUTRAL POSITION SWITCH (8W-21-3)
J958W-7

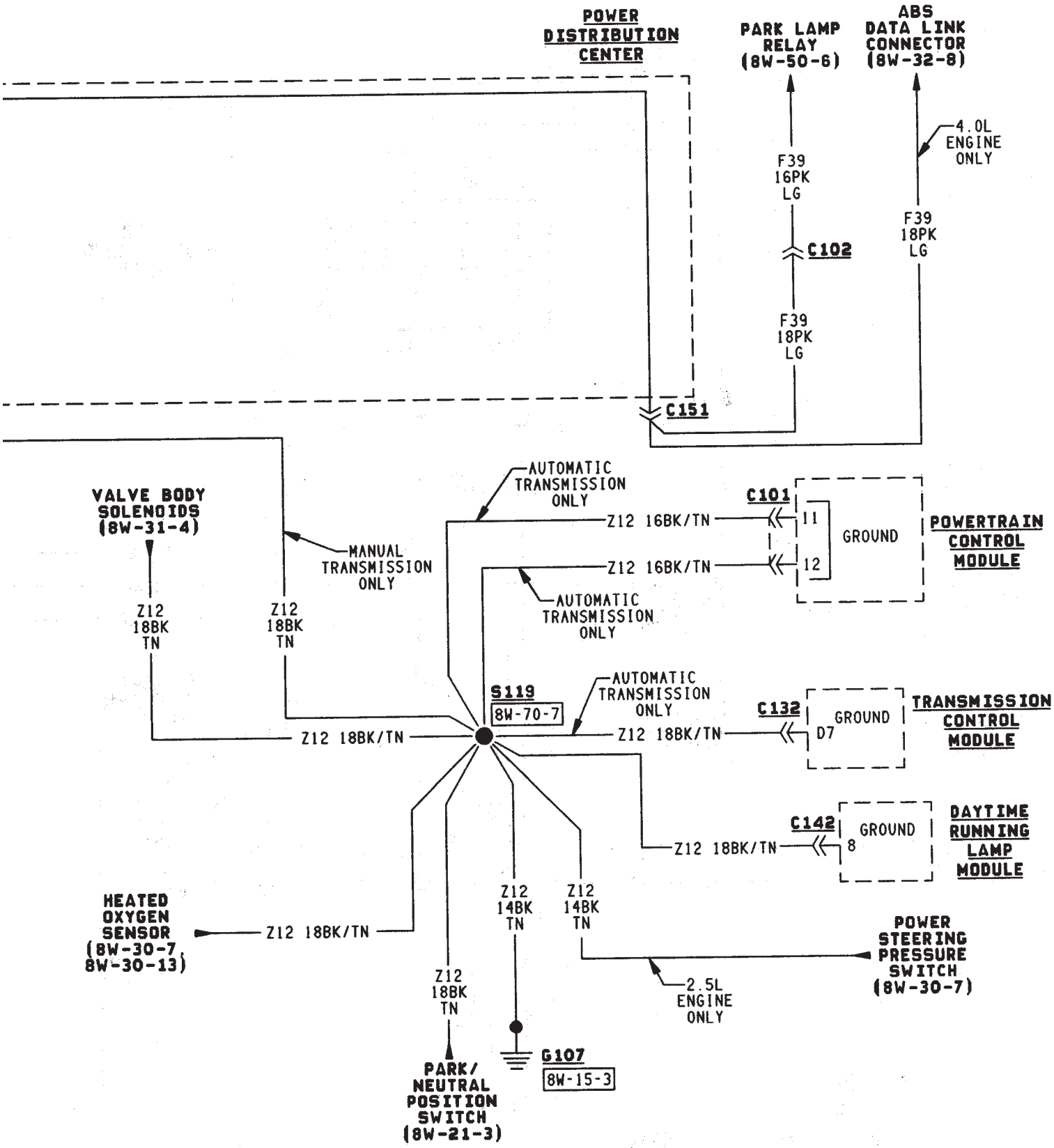
POWER DISTRIBUTION CENTER
PARK LAMP RELAY (8W-50-6)
ABS DATA LINK CONNECTOR (8W-32-8)
4.0L ENGINE ONLY
F39 16PK LG
C102
F39 18PK LG
F39 18PK LG
C151
VALVE BODY SOLENOIDS (8W-31-4)
MANUAL TRANSMISSION ONLY
AUTOMATIC TRANSMISSION ONLY
C101
Z12 16BK/TN
11
GROUND
POWERTRAIN CONTROL MODULE
Z12 16BK/TN
12
AUTOMATIC TRANSMISSION ONLY
Z12 18BK TN
Z12 18BK TN
S119
8W-70-7
AUTOMATIC TRANSMISSION ONLY
C132
GROUND
D7
TRANSMISSION CONTROL MODULE
Z12 18BK/TN
Z12 18BK/TN
C142
GROUND
8
DAYTIME RUNNING LAMP MODULE
Z12 18BK/TN
HEATED OXYGEN SENSOR (8W-30-7, 8W-30-13)
Z12 14BK TN
Z12 14BK TN
POWER STEERING PRESSURE SWITCH (8W-30-7)
2.5L ENGINE ONLY
Z12 18BK TN
G107
8W-15-3
PARK/ NEUTRAL POSITION SWITCH (8W-21-3)

J958W-7

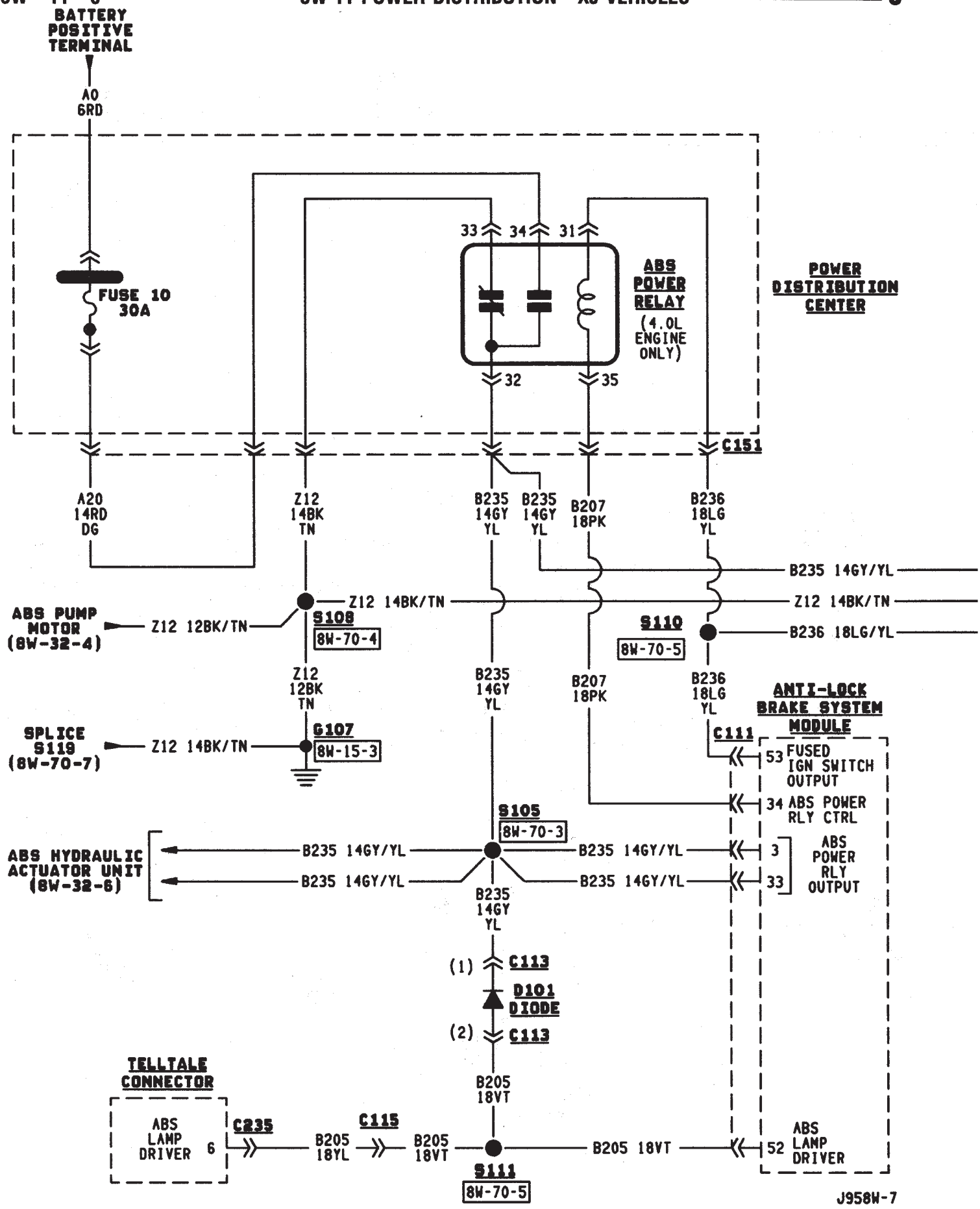
BATTERY POSITIVE TERMINAL
A0 6RD
FUSE 10 30A
33
34
31
ABS POWER RELAY
(4.0L ENGINE ONLY)
32
35
POWER DISTRIBUTION CENTER
C151
A20 14RD DG
Z12 14BK TN
B235 14GY YL
B235 14GY YL
B207 18PK
B236 18LG YL
B235 14GY/YL
Z12 14BK/TN
Z12 14BK/TN
ABS PUMP MOTOR (8W-32-4)
Z12 12BK/TN
S108
8W-70-4
S110
8W-70-5
B236 18LG/YL
Z12 12BK TN
B235 14GY YL
B207 18PK
B236 18LG YL
ANTI-LOCK BRAKE SYSTEM MODULE
C111
SPLICE S119 (8W-70-7)
Z12 14BK/TN
G107
8W-15-3
53 FUSED IGN SWITCH OUTPUT
34 ABS POWER RLY CTRL
S105
8W-70-3
ABS HYDRAULIC ACTUATOR UNIT (8W-32-6)
B235 14GY/YL
B235 14GY/YL
B235 14GY/YL
B235 14GY/YL
3
33
ABS POWER RLY OUTPUT
B235 14GY YL
(1)
C113
D101 DIODE
(2)
C113
B205 18VT
TELLTALE CONNECTOR
ABS LAMP DRIVER 6
C235
B205 18YL
C115
B205 18VT
B205 18VT
52 ABS LAMP DRIVER
S111
8W-70-5
J958W-7

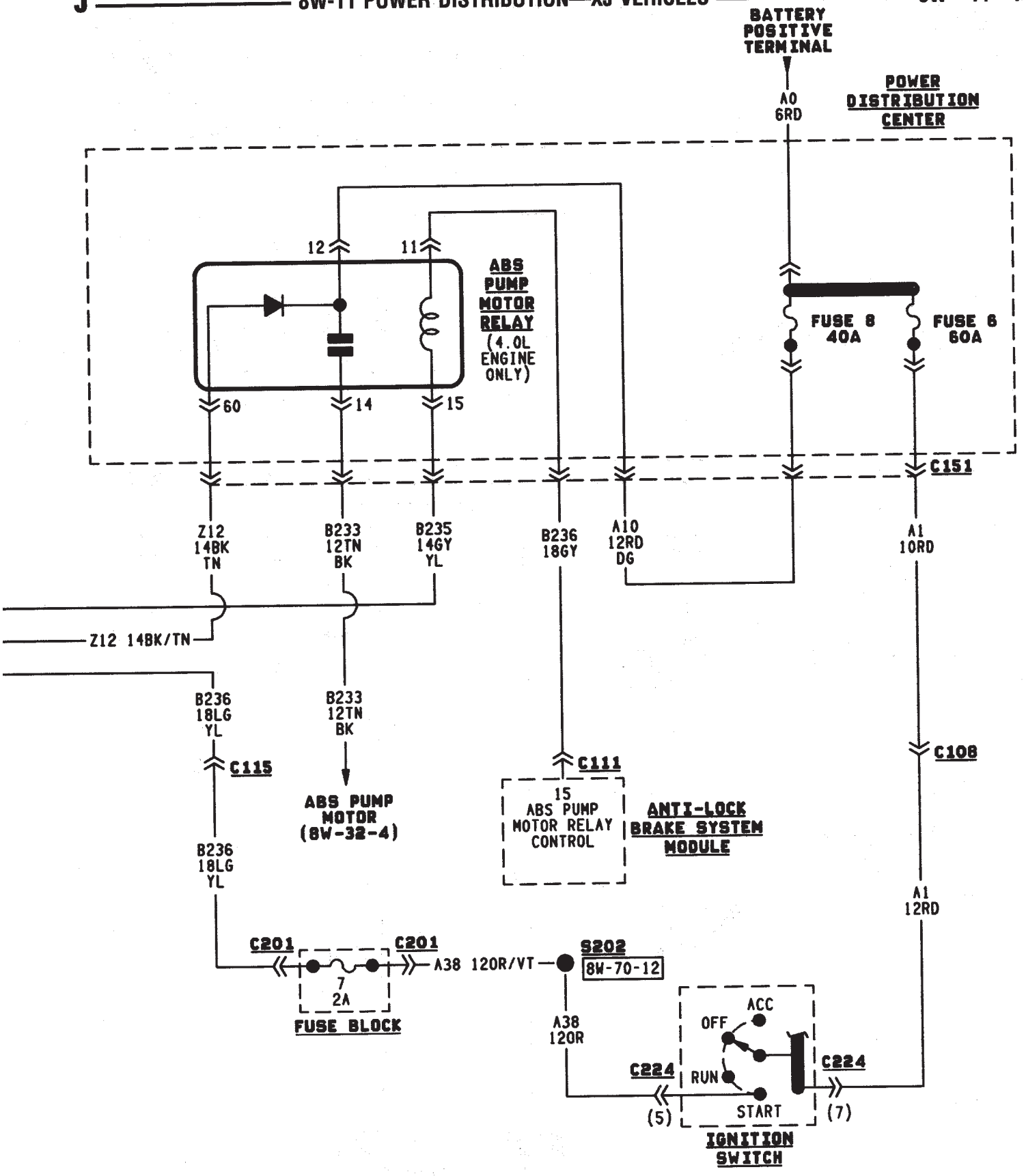
BATTERY POSITIVE TERMINAL
A0 6RD
POWER DISTRIBUTION CENTER
12
11
ABS PUMP MOTOR RELAY (4.0L ENGINE ONLY)
60
14
15
FUSE 8 40A
FUSE 6 60A
C151
Z12 14BK TN
B233 12TN BK
B235 14GY YL
B236 18GY
A10 12RD DG
A1 10RD
Z12 14BK/TN
B236 18LG YL
C115
B233 12TN BK
ABS PUMP MOTOR (8W-32-4)
C111
15 ABS PUMP MOTOR RELAY CONTROL
ANTI-LOCK BRAKE SYSTEM MODULE
C108
A1 12RD
B236 18LG YL
C201
C201
7 2A
FUSE BLOCK
A38 120R/VT
S202
8W-70-12
A38 120R
ACC
OFF
RUN
START
C224
C224
(5)
(7)
IGNITION SWITCH

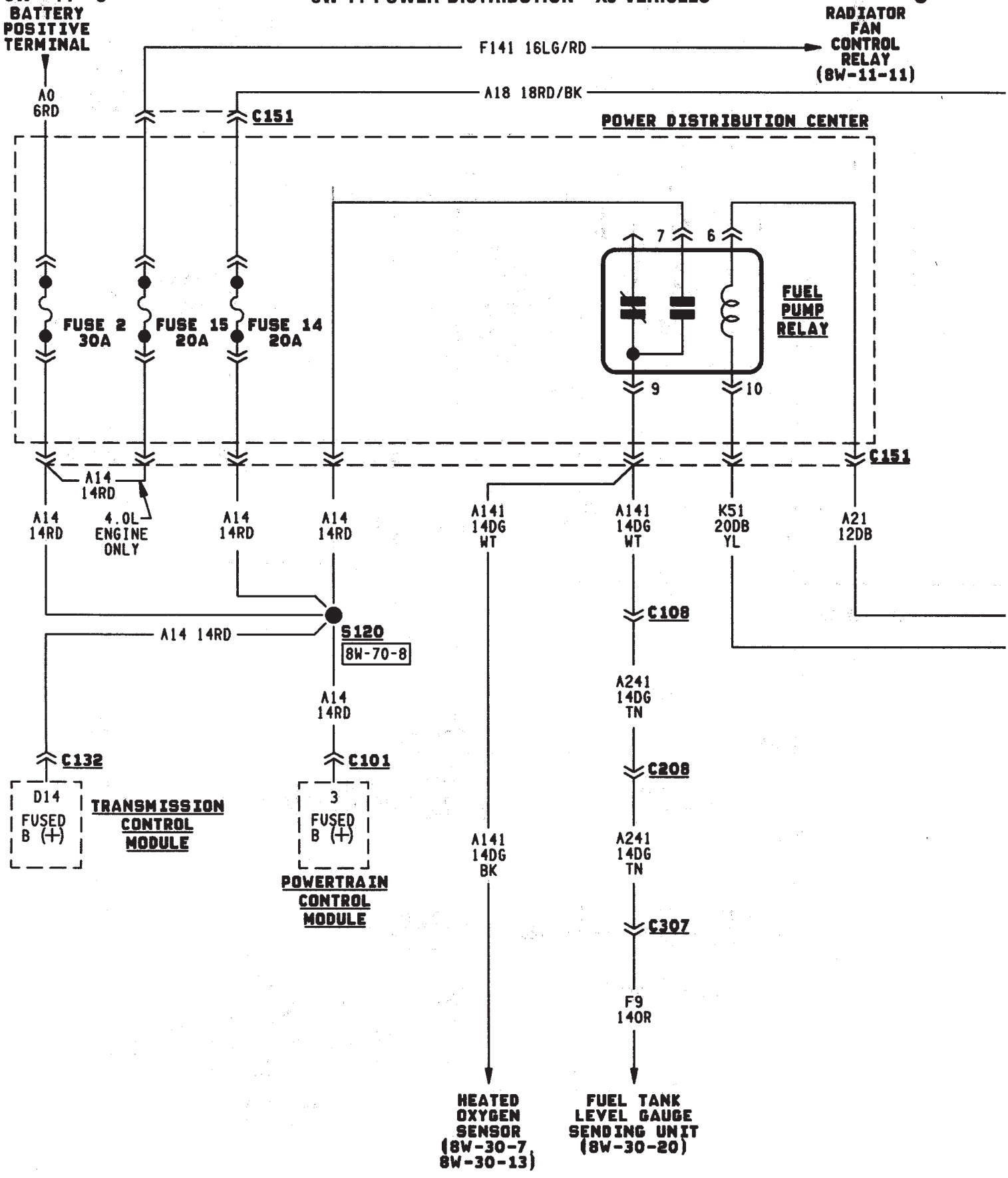
BATTERY POSITIVE TERMINAL
A0 6RD
F141 16LG/RD
RADIATOR FAN CONTROL RELAY (8W-11-11)
A18 18RD/BK
C151
POWER DISTRIBUTION CENTER
FUSE 2 30A
FUSE 15 20A
FUSE 14 20A
7
6
FUEL PUMP RELAY
9
10
C151
A14 14RD
A14 14RD
4.0L ENGINE ONLY
A14 14RD
A14 14RD
A141 14DG WT
A141 14DG WT
K51 20DB YL
A21 12DB
S120
8W-70-8
A14 14RD
C108
A241 14DG TN
C208
C132
C101
D14 FUSED B (+)
TRANSMISSION CONTROL MODULE
3 FUSED B (+)
POWERTRAIN CONTROL MODULE
A141 14DG BK
A241 14DG TN
C307
F9 14OR
HEATED OXYGEN SENSOR (8W-30-7, 8W-30-13)
FUEL TANK LEVEL GAUGE SENDING UNIT (8W-30-20)

J958W-7

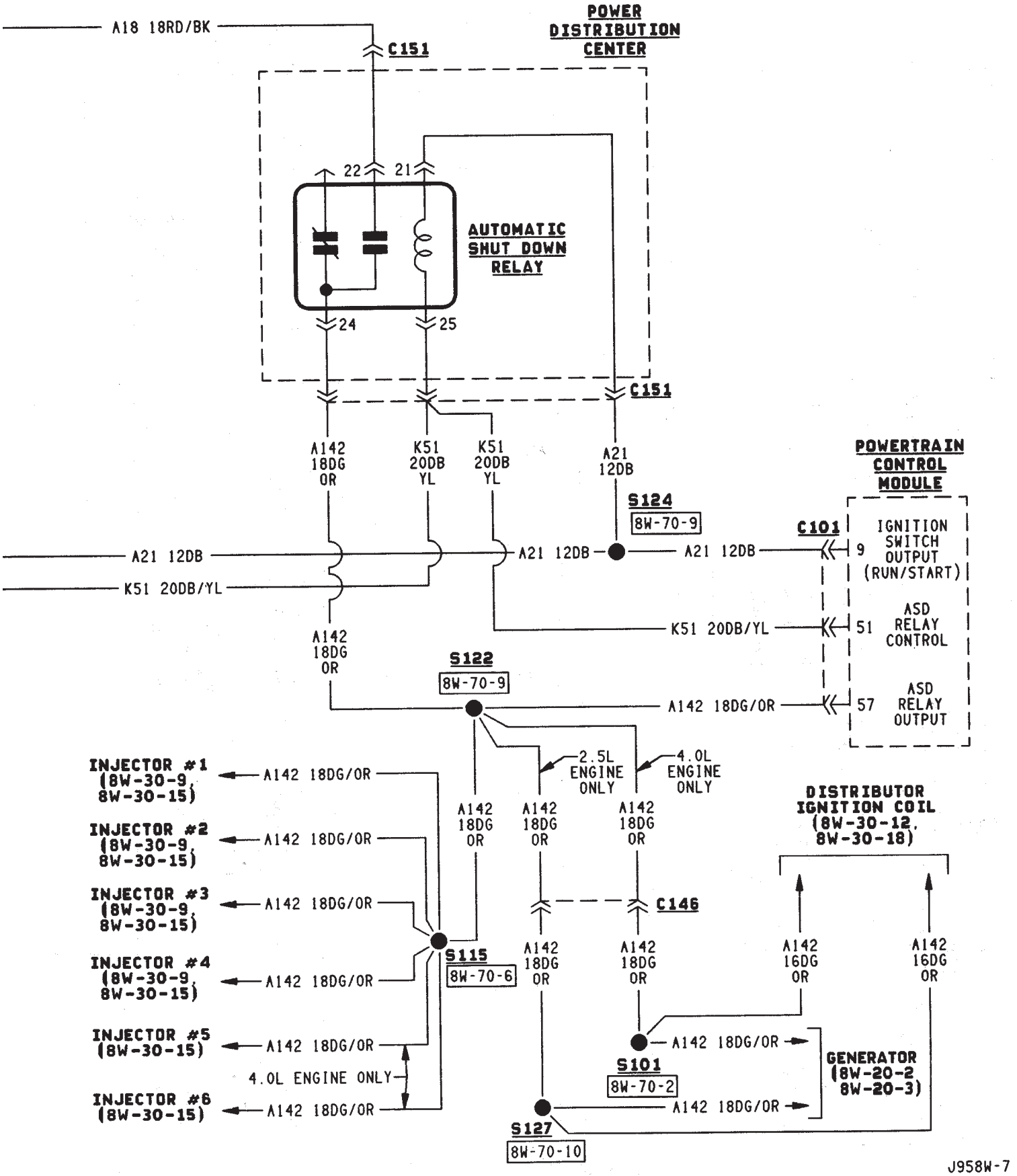
A18 18RD/BK
C151
POWER DISTRIBUTION CENTER
22
21
AUTOMATIC SHUT DOWN RELAY
24
25
C151
A142 18DG OR
K51 20DB YL
K51 20DB YL
A21 12DB
S124
8W-70-9
POWERTRAIN CONTROL MODULE
C101
A21 12DB
A21 12DB
A21 12DB
9 IGNITION SWITCH OUTPUT (RUN/START)
K51 20DB/YL
K51 20DB/YL
51 ASD RELAY CONTROL
A142 18DG OR
S122
8W-70-9
A142 18DG/OR
57 ASD RELAY OUTPUT
2.5L ENGINE ONLY
4.0L ENGINE ONLY
INJECTOR #1 (8W-30-9, 8W-30-15)
INJECTOR #2 (8W-30-9, 8W-30-15)
INJECTOR #3 (8W-30-9, 8W-30-15)
INJECTOR #4 (8W-30-9, 8W-30-15)
INJECTOR #5 (8W-30-15)
INJECTOR #6 (8W-30-15)
A142 18DG/OR
A142 18DG/OR
A142 18DG/OR
A142 18DG/OR
A142 18DG/OR
4.0L ENGINE ONLY
A142 18DG/OR
A142 18DG OR
A142 18DG OR
A142 18DG OR
DISTRIBUTOR IGNITION COIL (8W-30-12, 8W-30-18)
C146
S115
8W-70-6
A142 18DG OR
A142 18DG OR
A142 16DG OR
A142 16DG OR
A142 18DG/OR
S101
8W-70-2
GENERATOR (8W-20-2 8W-20-3)
A142 18DG/OR
S127
8W-70-10
J958W-7

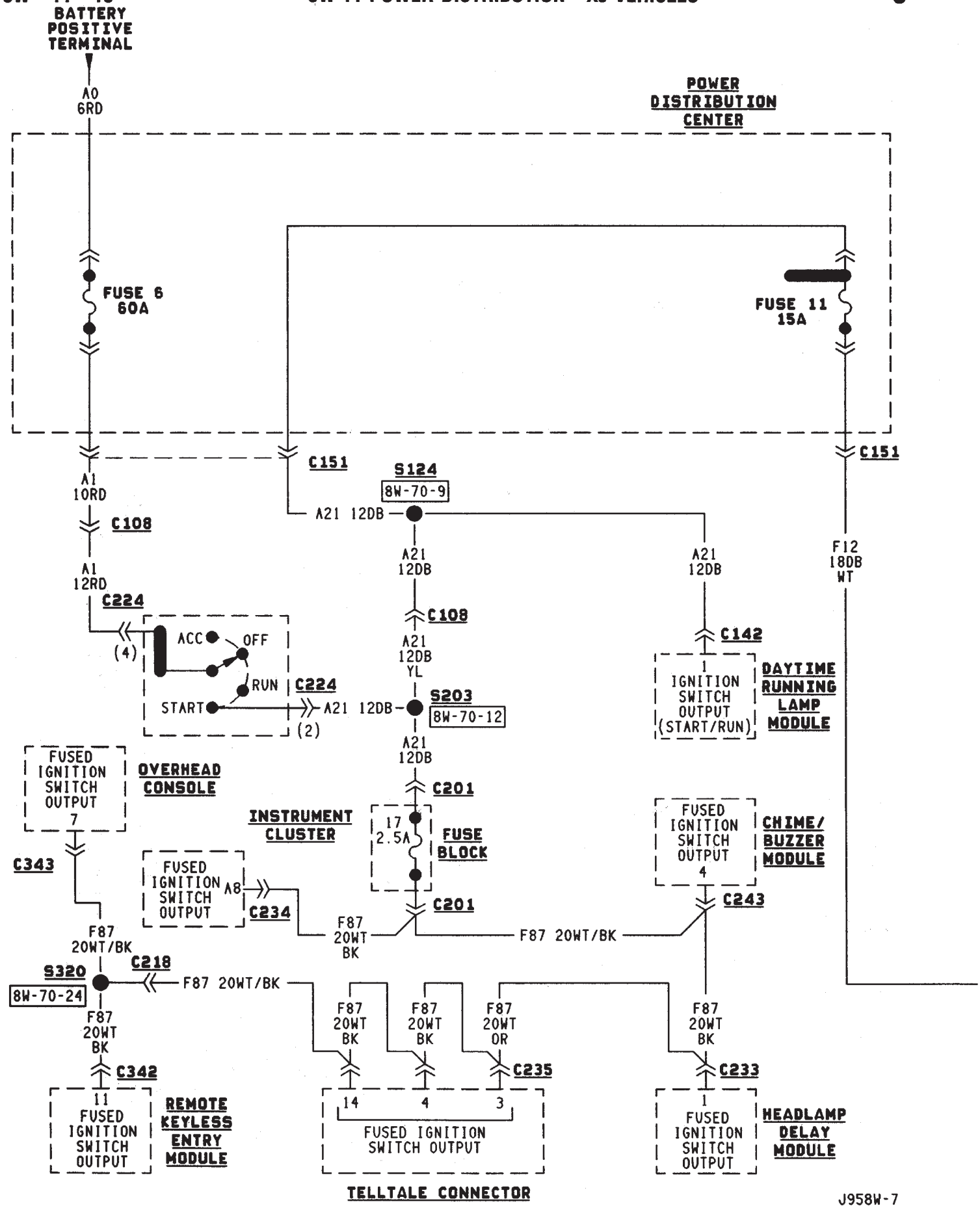
BATTERY POSITIVE TERMINAL
A0 6RD
POWER DISTRIBUTION CENTER
FUSE 6 60A
FUSE 11 15A
C151
A1 10RD
C108
A1 12RD
C224
(4)
ACC
OFF
RUN
START
C224
(2)
A21 12DB
S124
8W-70-9
A21 12DB
C108
A21 12DB YL
S203
8W-70-12
A21 12DB
C201
17 2.5A
FUSE BLOCK
C201
A21 12DB
C142
1 IGNITION SWITCH OUTPUT (START/RUN)
DAYTIME RUNNING LAMP MODULE
F12 18DB WT
C151
FUSED IGNITION SWITCH OUTPUT 7
OVERHEAD CONSOLE
INSTRUMENT CLUSTER
C343
FUSED IGNITION SWITCH OUTPUT
A8
C234
F87 20WT BK
F87 20WT/BK
FUSED IGNITION SWITCH OUTPUT 4
CHIME/ BUZZER MODULE
C243
F87 20WT/BK
S320
8W-70-24
C218
F87 20WT/BK
F87 20WT BK
C342
11 FUSED IGNITION SWITCH OUTPUT
REMOTE KEYLESS ENTRY MODULE
F87 20WT BK
F87 20WT BK
F87 20WT OR
C235
14
4
3
FUSED IGNITION SWITCH OUTPUT
TELLTALE CONNECTOR
F87 20WT BK
C233
1 FUSED IGNITION SWITCH OUTPUT
HEADLAMP DELAY MODULE
J958W-7

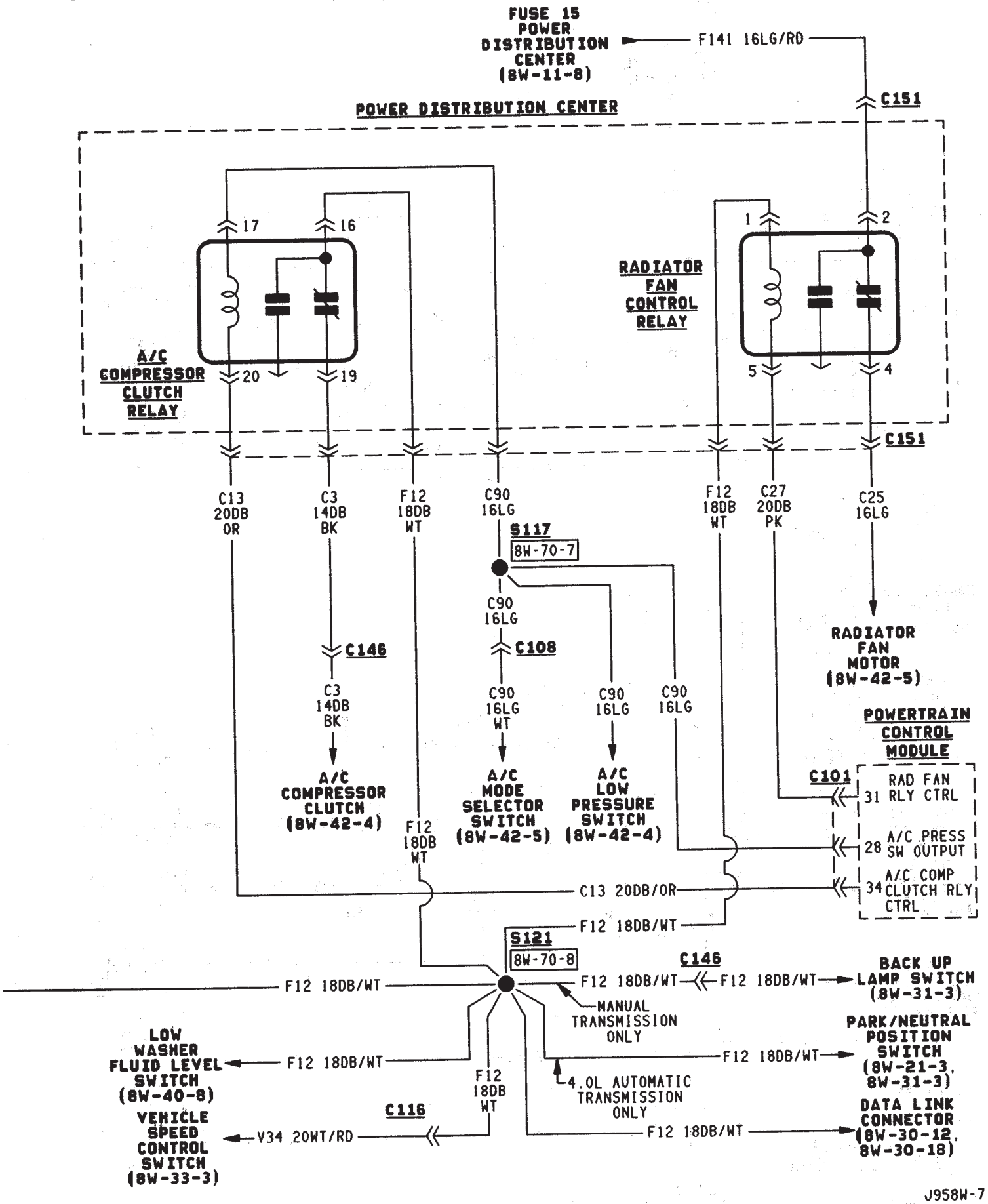
FUSE 15
POWER
DISTRIBUTION
CENTER
(8W-11-8)
F141 16LG/RD
C151
POWER DISTRIBUTION CENTER
17
16
1
2
A/C
COMPRESSOR
CLUTCH
RELAY
20
19
RADIATOR
FAN
CONTROL
RELAY
5
4
C151
C13
20DB
OR
C3
14DB
BK
F12
18DB
WT
C90
16LG
F12
18DB
WT
C27
20DB
PK
C25
16LG
S117
8W-70-7
C90
16LG
C146
C108
RADIATOR
FAN
MOTOR
(8W-42-5)
C3
14DB
BK
C90
16LG
WT
C90
16LG
C90
16LG
POWERTRAIN
CONTROL
MODULE
C101
RAD FAN
31 RLY CTRL
28 A/C PRESS
SW OUTPUT
34 A/C COMP
CLUTCH RLY
CTRL
A/C
COMPRESSOR
CLUTCH
(8W-42-4)
A/C
MODE
SELECTOR
SWITCH
(8W-42-5)
A/C
LOW
PRESSURE
SWITCH
(8W-42-4)
F12
18DB
WT
C13 20DB/OR
F12 18DB/WT
S121
8W-70-8
C146
F12 18DB/WT
F12 18DB/WT
F12 18DB/WT
BACK UP
LAMP SWITCH
(8W-31-3)
MANUAL
TRANSMISSION
ONLY
PARK/NEUTRAL
POSITION
SWITCH
(8W-21-3,
8W-31-3)
LOW
WASHER
FLUID LEVEL
SWITCH
(8W-40-8)
F12 18DB/WT
F12 18DB/WT
F12
18DB
WT
4.0L AUTOMATIC
TRANSMISSION
ONLY
C116
VEHICLE
SPEED
CONTROL
SWITCH
(8W-33-3)
V34 20WT/RD
F12 18DB/WT
DATA LINK
CONNECTOR
(8W-30-12,
8W-30-18)
J958W-7

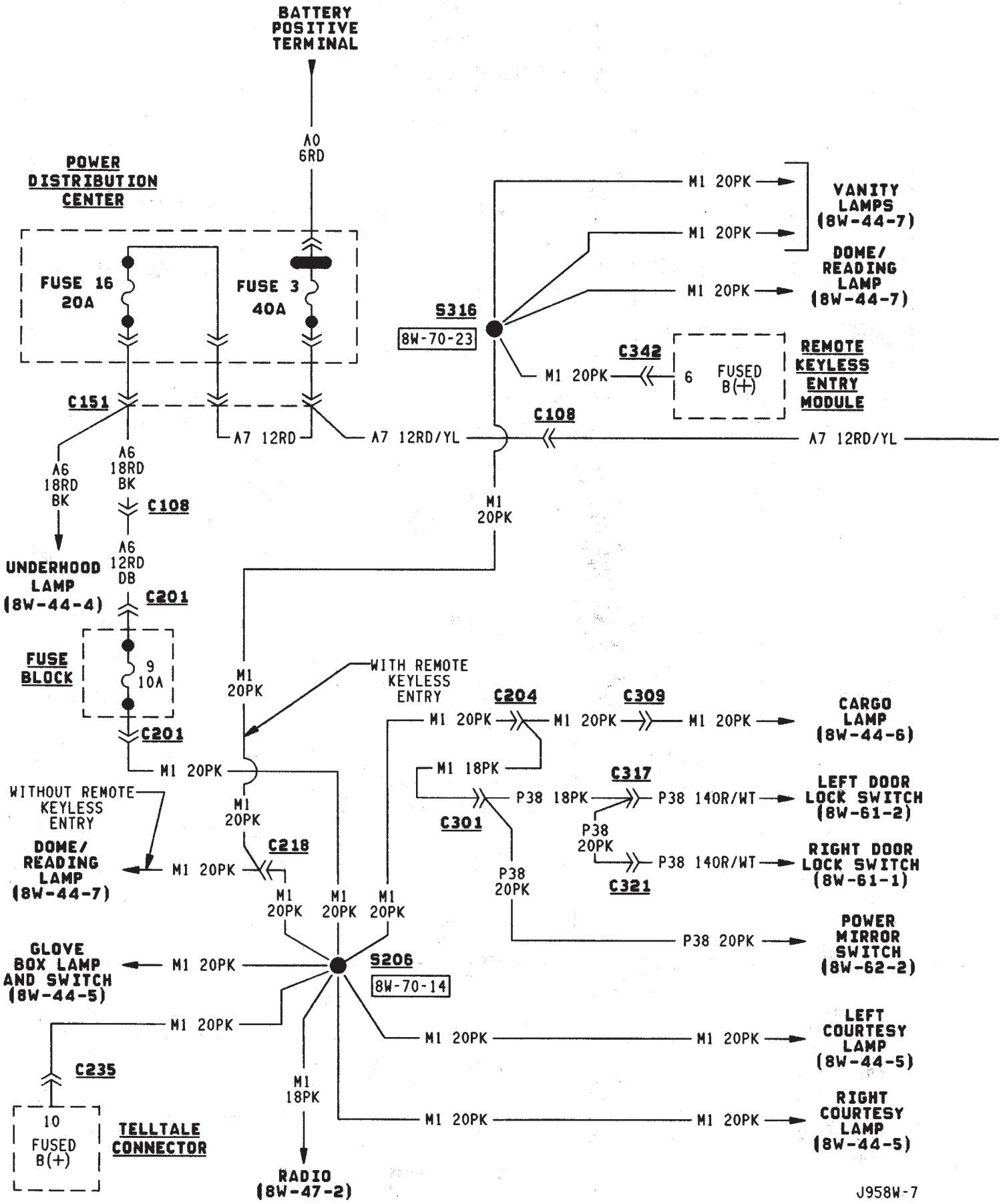
BATTERY POSITIVE TERMINAL
A0 6RD
POWER DISTRIBUTION CENTER
FUSE 16 20A
FUSE 3 40A
C151
A7 12RD
A7 12RD/YL
S316
8W-70-23
M1 20PK
VANITY LAMPS (8W-44-7)
DOME/ READING LAMP (8W-44-7)
C342
6 FUSED B(+)
REMOTE KEYLESS ENTRY MODULE
C108
A6 18RD BK
A6 12RD DB
C201
UNDERHOOD LAMP (8W-44-4)
FUSE BLOCK
9 10A
WITH REMOTE KEYLESS ENTRY
WITHOUT REMOTE KEYLESS ENTRY
C204
C309
CARGO LAMP (8W-44-6)
M1 18PK
C301
C317
P38 18PK
P38 140R/WT
LEFT DOOR LOCK SWITCH (8W-61-2)
P38 20PK
C321
RIGHT DOOR LOCK SWITCH (8W-61-1)
C218
P38 20PK
POWER MIRROR SWITCH (8W-62-2)
GLOVE BOX LAMP AND SWITCH (8W-44-5)
S206
8W-70-14
C235
10 FUSED B(+)
TELLTALE CONNECTOR
LEFT COURTESY LAMP (8W-44-5)
RIGHT COURTESY LAMP (8W-44-5)
RADIO (8W-47-2)
J958W-7

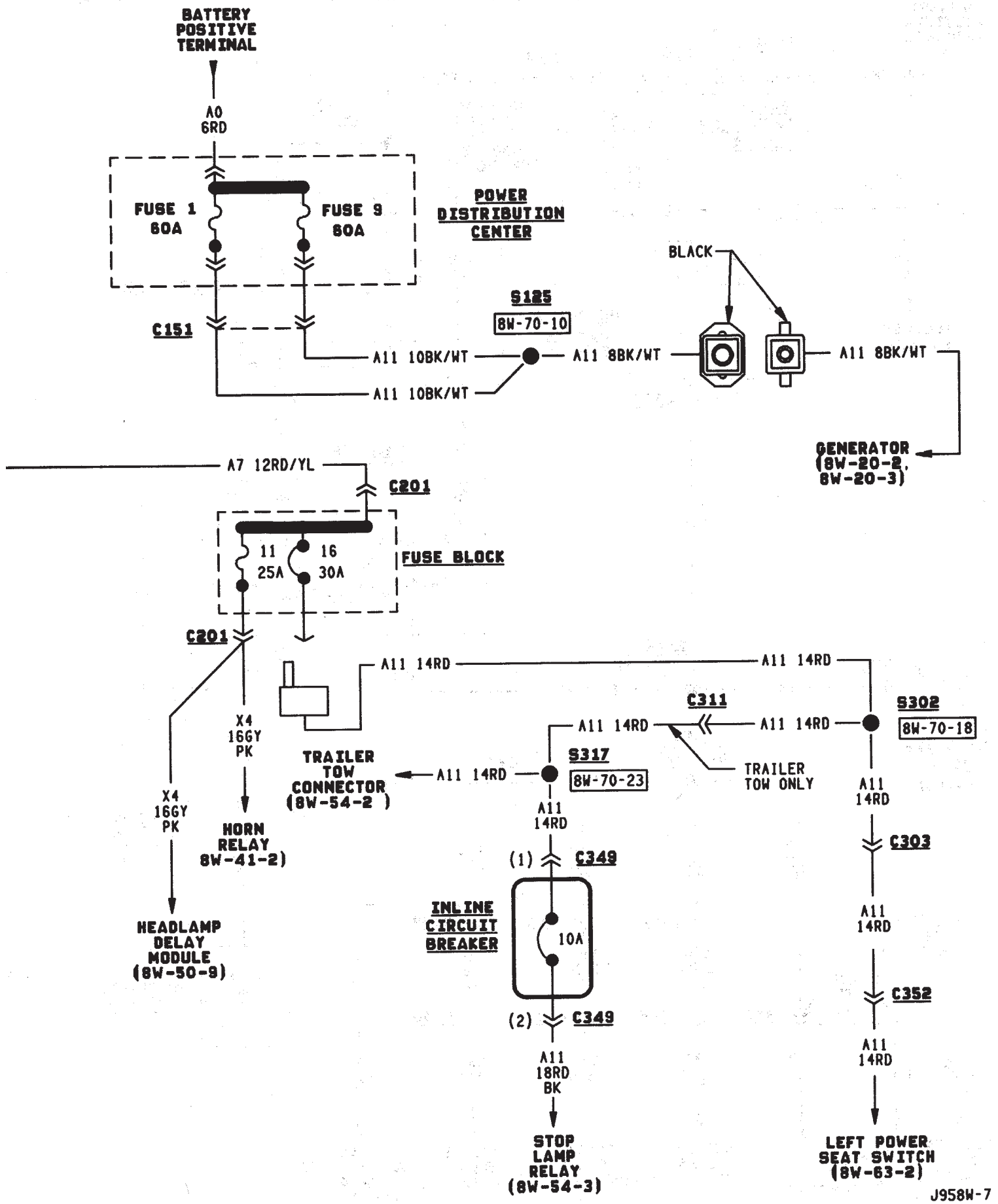
BATTERY POSITIVE TERMINAL
A0 6RD
FUSE 1 60A
FUSE 9 60A
POWER DISTRIBUTION CENTER
C151
S125
8W-70-10
A11 10BK/WT
A11 8BK/WT
A11 10BK/WT
BLACK
A11 8BK/WT
GENERATOR (8W-20-2, 8W-20-3)
A7 12RD/YL
C201
11 25A
16 30A
FUSE BLOCK
C201
A11 14RD
A11 14RD
C311
S302
8W-70-18
A11 14RD
A11 14RD
TRAILER TOW ONLY
X4 16GY PK
TRAILER TOW CONNECTOR (8W-54-2)
A11 14RD
S317
8W-70-23
X4 16GY PK
HORN RELAY 8W-41-2)
A11 14RD
A11 14RD
C303
(1)
C349
INLINE CIRCUIT BREAKER
10A
A11 14RD
C352
(2)
C349
A11 18RD BK
A11 14RD
HEADLAMP DELAY MODULE (8W-50-9)
STOP LAMP RELAY (8W-54-3)
LEFT POWER SEAT SWITCH (8W-63-2)
J958W-7

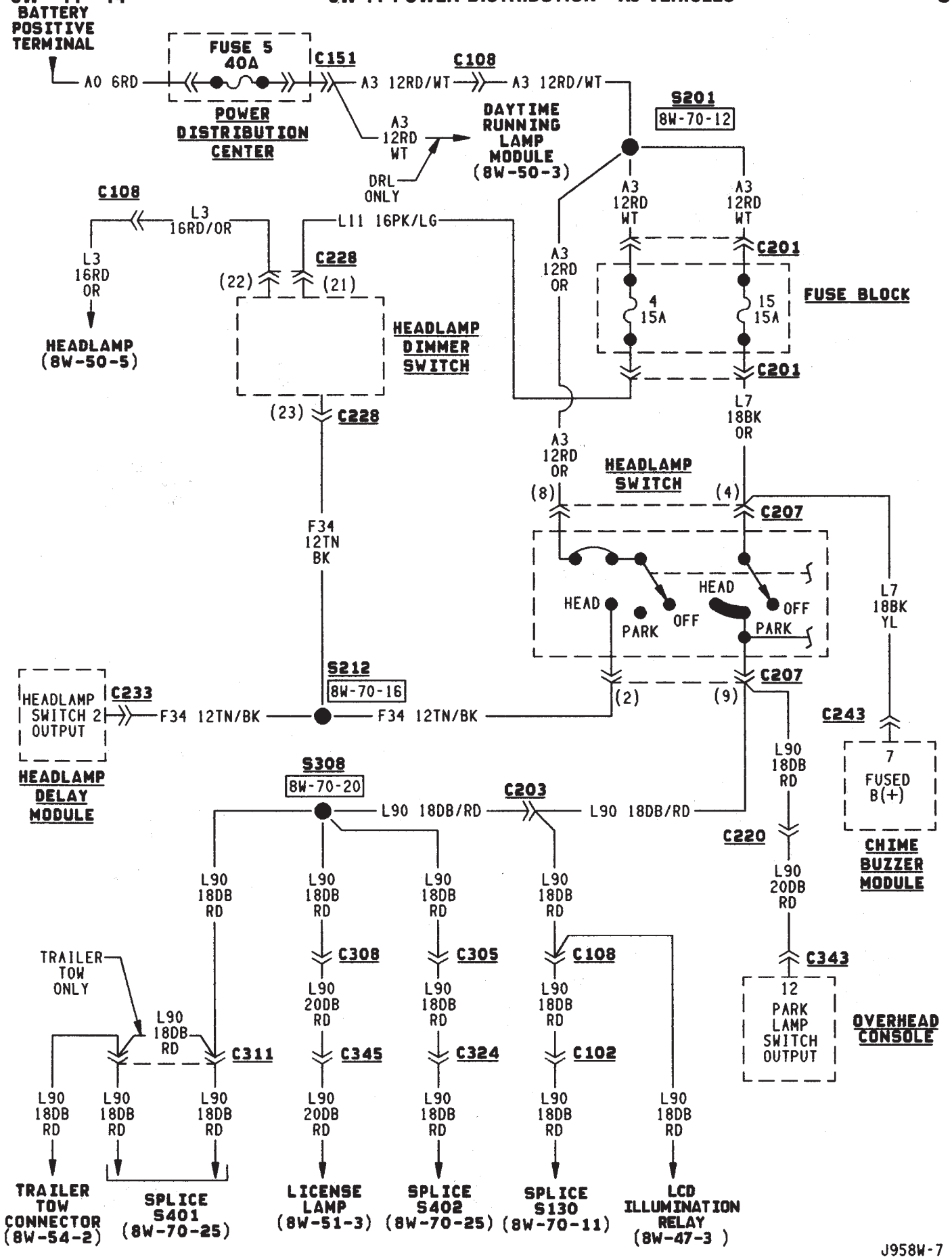
BATTERY POSITIVE TERMINAL
A0 6RD
FUSE 5 40A
C151
POWER DISTRIBUTION CENTER
A3 12RD/WT
C108
A3 12RD/WT
A3 12RD WT
DRL ONLY
DAYTIME RUNNING LAMP MODULE (8W-50-3)
S201
8W-70-12
C108
L3 16RD/OR
L3 16RD OR
HEADLAMP (8W-50-5)
L11 16PK/LG
C228
(22)
(21)
HEADLAMP DIMMER SWITCH
(23)
C228
A3 12RD OR
A3 12RD WT
C201
4 15A
15 15A
FUSE BLOCK
C201
L7 18BK OR
A3 12RD OR
HEADLAMP SWITCH
(8)
(4)
C207
HEAD
OFF
PARK
HEAD
OFF
PARK
L7 18BK YL
F34 12TN BK
S212
8W-70-16
HEADLAMP SWITCH 2 OUTPUT
C233
F34 12TN/BK
F34 12TN/BK
(2)
(9)
C207
C243
7 FUSED B(+)
CHIME BUZZER MODULE
HEADLAMP DELAY MODULE
S308
8W-70-20
L90 18DB/RD
C203
L90 18DB/RD
L90 18DB RD
C220
L90 20DB RD
C343
12 PARK LAMP SWITCH OUTPUT
OVERHEAD CONSOLE
L90 18DB RD
L90 18DB RD
L90 18DB RD
L90 18DB RD
C308
C305
C108
L90 20DB RD
L90 18DB RD
L90 18DB RD
TRAILER TOW ONLY
L90 18DB RD
C311
C345
C324
C102
L90 18DB RD
L90 18DB RD
L90 18DB RD
L90 20DB RD
L90 18DB RD
L90 18DB RD
L90 18DB RD
TRAILER TOW CONNECTOR (8W-54-2)
SPLICE S401 (8W-70-25)
LICENSE LAMP (8W-51-3)
SPLICE S402 (8W-70-25)
SPLICE S130 (8W-70-11)
LCD ILLUMINATION RELAY (8W-47-3)

J958W-7

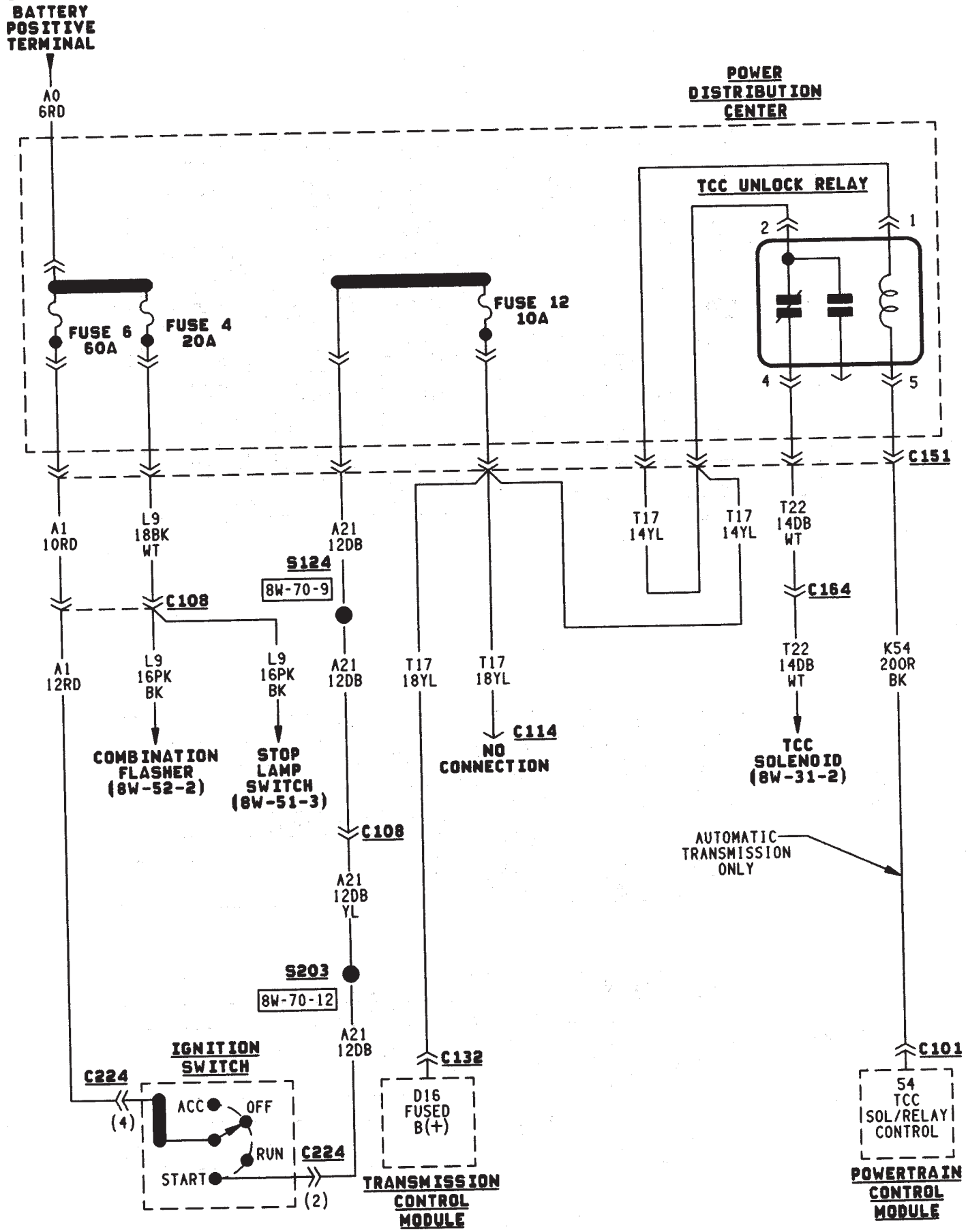
BATTERY POSITIVE TERMINAL
A0 6RD
POWER DISTRIBUTION CENTER
TCC UNLOCK RELAY
2
1
4
5
FUSE 6 60A
FUSE 4 20A
FUSE 12 10A
C151
A1 10RD
L9 18BK WT
A21 12DB
T17 14YL
T17 14YL
T22 14DB WT
S124
8W-70-9
C108
C164
A1 12RD
L9 16PK BK
L9 16PK BK
A21 12DB
T17 18YL
T17 18YL
T22 14DB WT
K54 200R BK
C114
NO CONNECTION
COMBINATION FLASHER (8W-52-2)
STOP LAMP SWITCH (8W-51-3)
TCC SOLENOID (8W-31-2)
AUTOMATIC TRANSMISSION ONLY
C108
A21 12DB YL
S203
8W-70-12
A21 12DB
C132
C101
IGNITION SWITCH
C224
ACC
OFF
RUN
START
C224
(4)
(2)
D16 FUSED B(+)
54 TCC SOL/RELAY CONTROL
TRANSMISSION CONTROL MODULE
POWERTRAIN CONTROL MODULE
J958W-7

RELAY CENTER

C242

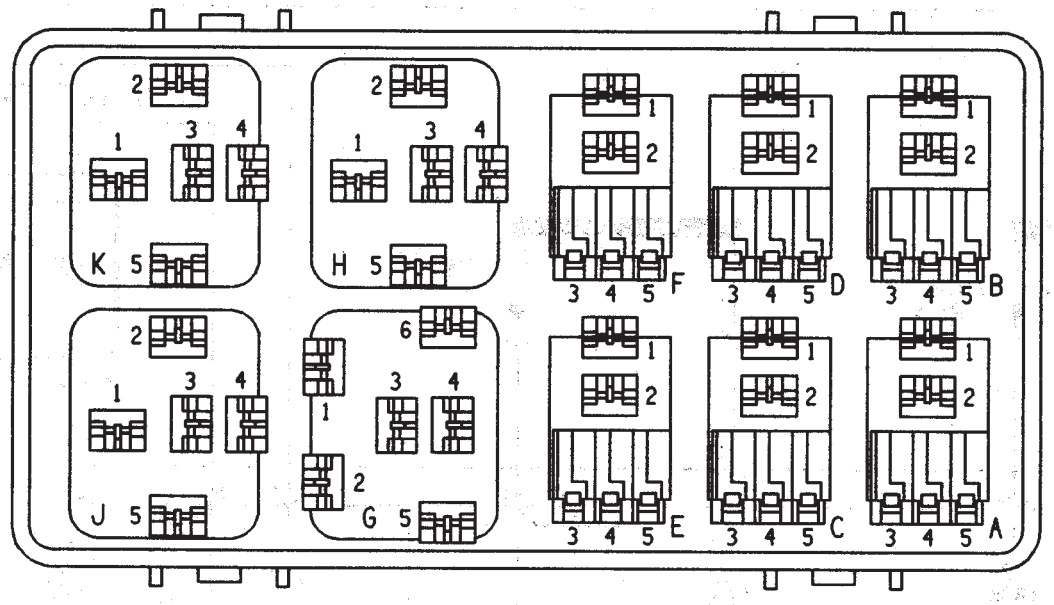

POWER DOOR LOCK RELAY (8W-61-3)

CAV	CIRCUIT	FUNCTION
A1	P2 18BK/WT	DOORLOCK RELAY OUTPUT
A2	P37 18LG	FUSED B(+)
A2	P37 18LG	FUSED B(+)
A3	P35 200R/VT	DOOR LOCK SWITCH OUTPUT (LOCK)
A4	Z1 18BK	GROUND
A5	Z1 18BK	GROUND
A5	Z1 18BK	GROUND

POWER DOOR UNLOCK RELAY (8W-61-3)

CAV	CIRCUIT	FUNCTION
B1	P34 18PK/BK	DOOR UNLOCK RELAY OUTPUT
B2	P37 18LG	FUSED B(+)
B3	P36 20PK/WT	DOOR LOCK SWITCH OUTPUT (UNLOCK)
B4	Z1 18BK	GROUND
B4	Z1 18BK	GROUND
B5	Z1 18BK	GROUND
B5	Z1 18BK	GROUND

LCD ILLUMINATION RELAY (8W-47-3)

CAV	CIRCUIT	FUNCTION
C1	X5 18LB/RD	RADIO DISPLAY OUTPUT
C2	E2 20OR/BK	PANEL LAMPS DRIVER
C3	L90 18DB/RD	PARK LAMP SWITCH OUTPUT
C4	F85 18VT/WT	FUSED IGNITION SWITCH OUTPUT
C5	Z1 20BK	GROUND

HORN RELAY (8W-41-2)

CAV	CIRCUIT	FUNCTION
F1	X2 16DG/RD	HORN RELAY OUTPUT
F2	X4 16GY/PK	FUSED B(+)
F3	X3 20BK/RD	HORN RELAY CONTROL
F5	X4 16GY/PK	FUSED B(+)
F5	X4 16GY/PK	FUSED B(+)

HEATED REAR WINDOW RELAY (8W-48-2)

CAV	CIRCUIT	FUNCTION
H1	C15 12BK/RD	HEATED REAR WINDOW RELAY OUTPUT
H2	Z1 18BK	GROUND
H2	Z1 20BK	GROUND
H3	C80 18DB/WT	HEATED REAR WINDOW SWITCH
H4	F81 12BR	FUSED B(+)
H5	F83 18YL/RD	FUSED IGNITION SWITCH OUTPUT (ACC/RUN)

COMBINATION FLASHER (8W-52-2)

CAV	CIRCUIT	FUNCTION
J1	F83 18YL/RD	FUSED IGNITION SWITCH OUTPUT (ACC/RUN)
J1	F83 18YL/RD	FUSED IGNITION SWITCH OUTPUT (ACC/RUN)
J2	L9 16PK/BK	FUSED B(+)
J3	L12 18VT/TN	COMBINATION FLASHER OUTPUT (HAZARD)
J4	L5 18GY	COMBINATION FLASHER OUTPUT (TURN SIGNALS)
J5	Z1 18BK	GROUND
J5	Z1 18BK	GROUND

GROUND DISTRIBUTION

GENERAL INFORMATION

This section identifies the vehicle grounds, splices connected to each ground, and the components connected to each ground. Refer to the appropriate section of the wiring diagrams for circuit descriptions of specific systems. Refer to sub-section 8W-90 for illustrations of the physical location of each ground on the vehicle.

DIAGRAM INDEX

Component	Page
G101	8W-15-2
G102	8W-15-2
G103	8W-15-2
G104	8W-15-2
G105	8W-15-2
G106	8W-15-3
G107	8W-15-3
G108	8W-15-4
G109	8W-15-4
G201	8W-15-5
G301	8W-15-6

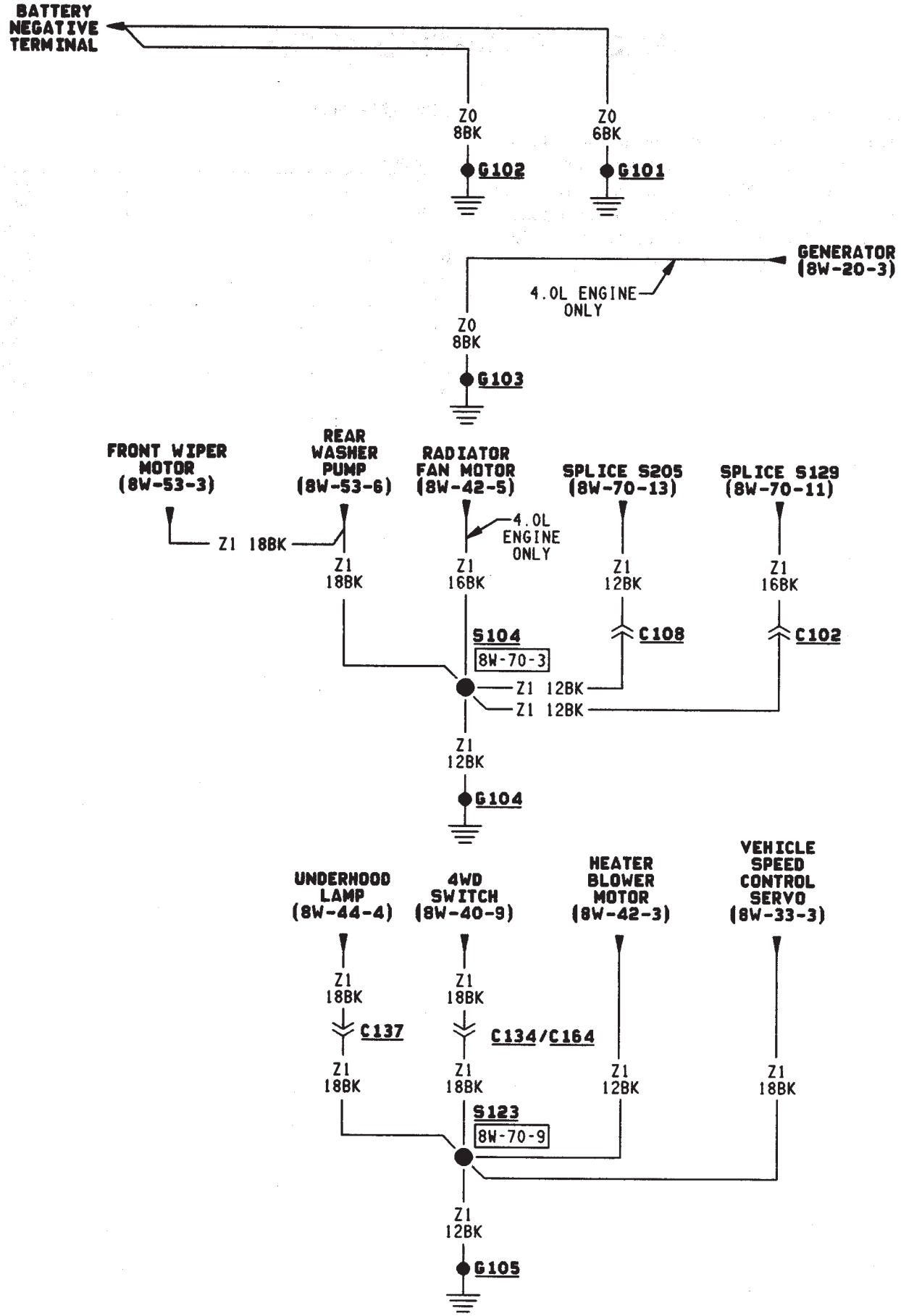
BATTERY NEGATIVE TERMINAL
Z0 8BK
G102
Z0 6BK
G101
GENERATOR (8W-20-3)
4.0L ENGINE ONLY
Z0 8BK
G103
FRONT WIPER MOTOR (8W-53-3)
REAR WASHER PUMP (8W-53-6)
RADIATOR FAN MOTOR (8W-42-5)
SPLICE S205 (8W-70-13)
SPLICE S129 (8W-70-11)
Z1 18BK
4.0L ENGINE ONLY
Z1 18BK
Z1 16BK
Z1 12BK
Z1 16BK
S104
8W-70-3
C108
C102
Z1 12BK
Z1 12BK
Z1 12BK
G104
UNDERHOOD LAMP (8W-44-4)
4WD SWITCH (8W-40-9)
HEATER BLOWER MOTOR (8W-42-3)
VEHICLE SPEED CONTROL SERVO (8W-33-3)
Z1 18BK
Z1 18BK
C137
C134/C164
Z1 18BK
Z1 18BK
Z1 12BK
Z1 18BK
S123
8W-70-9
Z1 12BK
G105

J958W-7

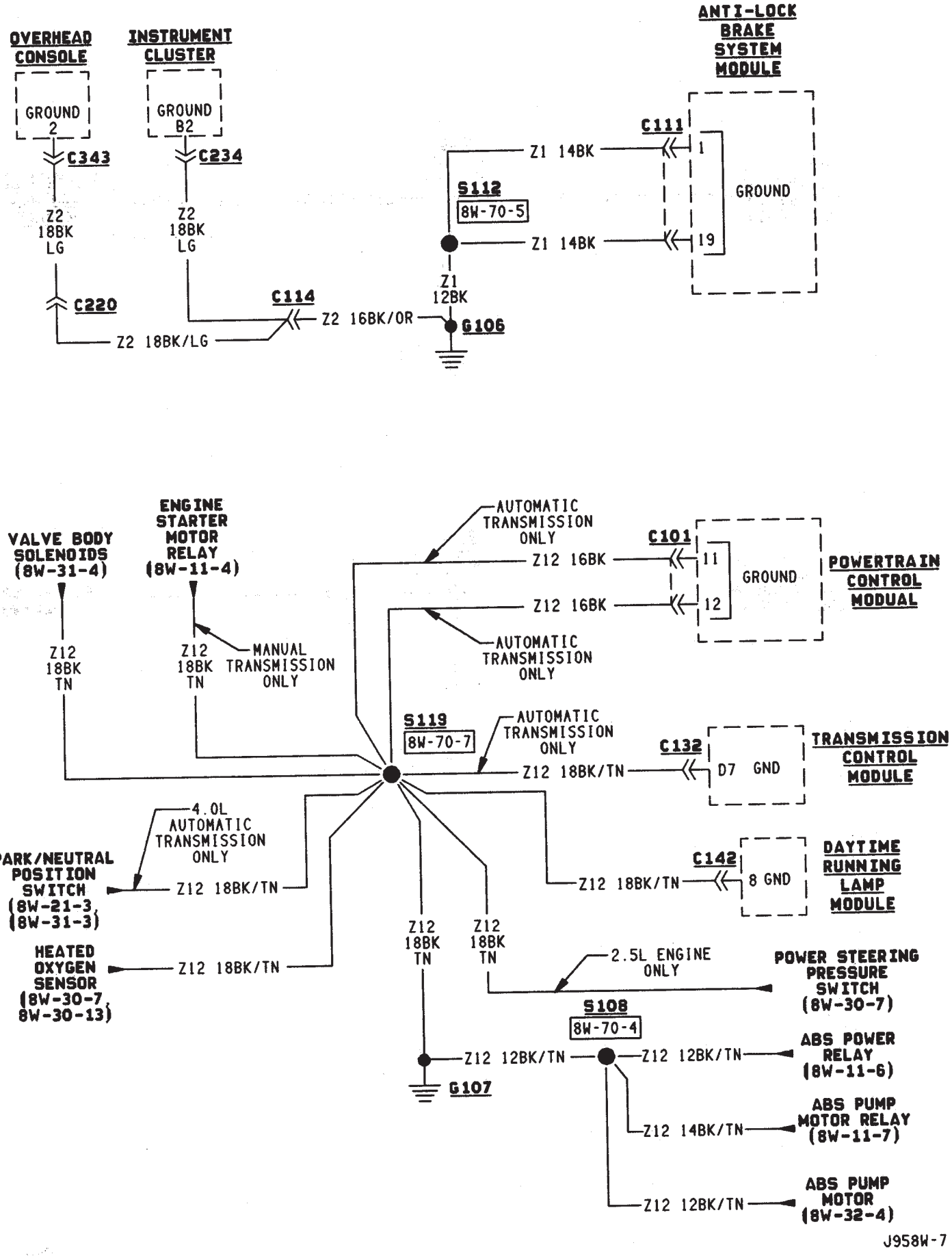
OVERHEAD CONSOLE
GROUND 2
C343
Z2 18BK LG
C220
INSTRUMENT CLUSTER
GROUND B2
C234
Z2 18BK LG
C114
Z2 16BK/OR
Z2 18BK/LG
G106
Z1 12BK
S112
8W-70-5
Z1 14BK
Z1 14BK
ANTI-LOCK BRAKE SYSTEM MODULE
C111
1
19
GROUND
VALVE BODY SOLENOIDS (8W-31-4)
Z12 18BK TN
ENGINE STARTER MOTOR RELAY (8W-11-4)
Z12 18BK TN
MANUAL TRANSMISSION ONLY
AUTOMATIC TRANSMISSION ONLY
Z12 16BK
Z12 16BK
C101
11
12
GROUND
POWERTRAIN CONTROL MODUAL
AUTOMATIC TRANSMISSION ONLY
S119
8W-70-7
AUTOMATIC TRANSMISSION ONLY
Z12 18BK/TN
C132
D7 GND
TRANSMISSION CONTROL MODULE
4.0L AUTOMATIC TRANSMISSION ONLY
PARK/NEUTRAL POSITION SWITCH (8W-21-3, 8W-31-3)
Z12 18BK/TN
HEATED OXYGEN SENSOR (8W-30-7, 8W-30-13)
Z12 18BK/TN
Z12 18BK/TN
C142
8 GND
DAYTIME RUNNING LAMP MODULE
Z12 18BK TN
Z12 18BK TN
2.5L ENGINE ONLY
POWER STEERING PRESSURE SWITCH (8W-30-7)
S108
8W-70-4
Z12 12BK/TN
Z12 12BK/TN
ABS POWER RELAY (8W-11-6)
G107
Z12 14BK/TN
ABS PUMP MOTOR RELAY (8W-11-7)
Z12 12BK/TN
ABS PUMP MOTOR (8W-32-4)
J958W-7

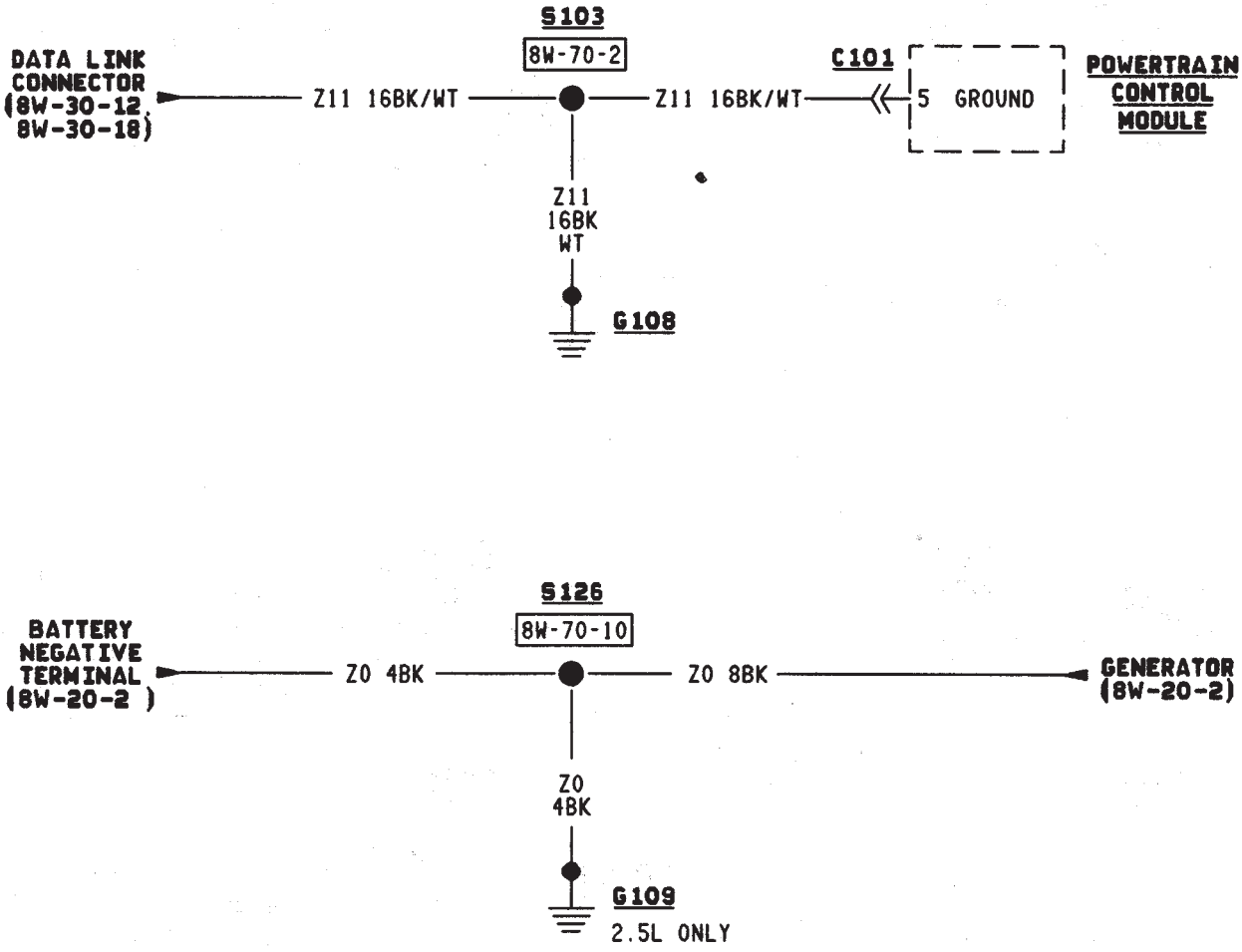
S103
8W-70-2
DATA LINK CONNECTOR (8W-30-12, 8W-30-18)
Z11 16BK/WT
Z11 16BK/WT
C101
5 GROUND
POWERTRAIN CONTROL MODULE
Z11 16BK WT
G108
S126
8W-70-10
BATTERY NEGATIVE TERMINAL (8W-20-2)
Z0 4BK
Z0 8BK
GENERATOR (8W-20-2)
Z0 4BK
G109
2.5L ONLY

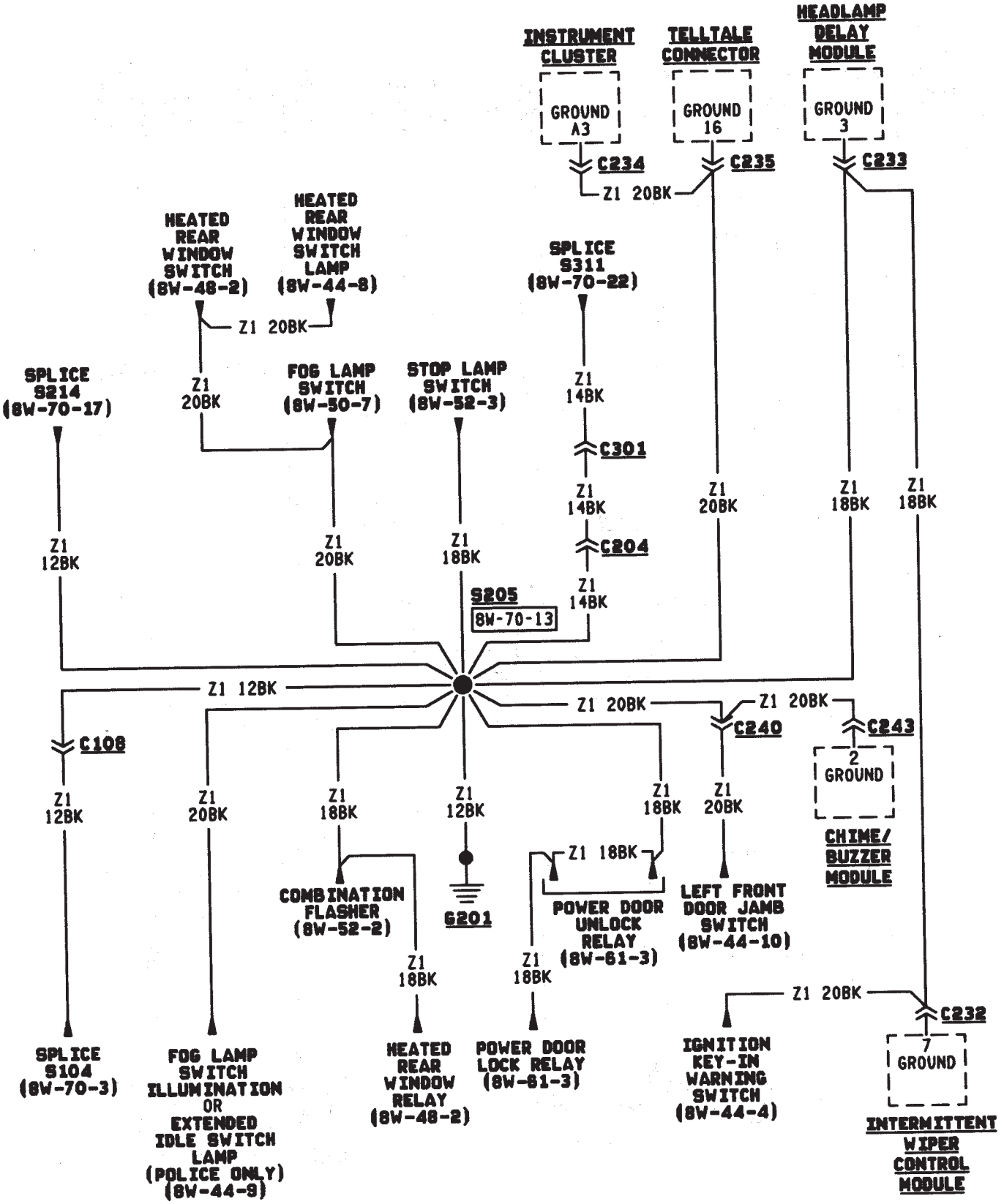
INSTRUMENT CLUSTER
GROUND A3
C234
TELLTALE CONNECTOR
GROUND 16
C235
HEADLAMP DELAY MODULE
GROUND 3
C233
Z1 20BK
HEATED REAR WINDOW SWITCH (8W-48-2)
HEATED REAR WINDOW SWITCH LAMP (8W-44-8)
Z1 20BK
SPLICE S311 (8W-70-22)
SPLICE S214 (8W-70-17)
Z1 20BK
FOG LAMP SWITCH (8W-50-7)
STOP LAMP SWITCH (8W-52-3)
Z1 14BK
C301
Z1 14BK
C204
Z1 14BK
Z1 20BK
Z1 18BK
Z1 18BK
Z1 12BK
Z1 20BK
Z1 18BK
S205
8W-70-13
Z1 12BK
Z1 20BK
Z1 20BK
C240
C243
2 GROUND
CHIME/ BUZZER MODULE
C108
Z1 12BK
Z1 20BK
Z1 18BK
Z1 12BK
Z1 18BK
Z1 20BK
Z1 18BK
COMBINATION FLASHER (8W-52-2)
G201
POWER DOOR UNLOCK RELAY (8W-61-3)
LEFT FRONT DOOR JAMB SWITCH (8W-44-10)
Z1 18BK
Z1 18BK
Z1 20BK
C232
SPLICE S104 (8W-70-3)
FOG LAMP SWITCH ILLUMINATION OR EXTENDED IDLE SWITCH LAMP (POLICE ONLY) (8W-44-9)
HEATED REAR WINDOW RELAY (8W-48-2)
POWER DOOR LOCK RELAY (8W-61-3)
IGNITION KEY-IN WARNING SWITCH (8W-44-4)
7 GROUND
INTERMITTENT WIPER CONTROL MODULE

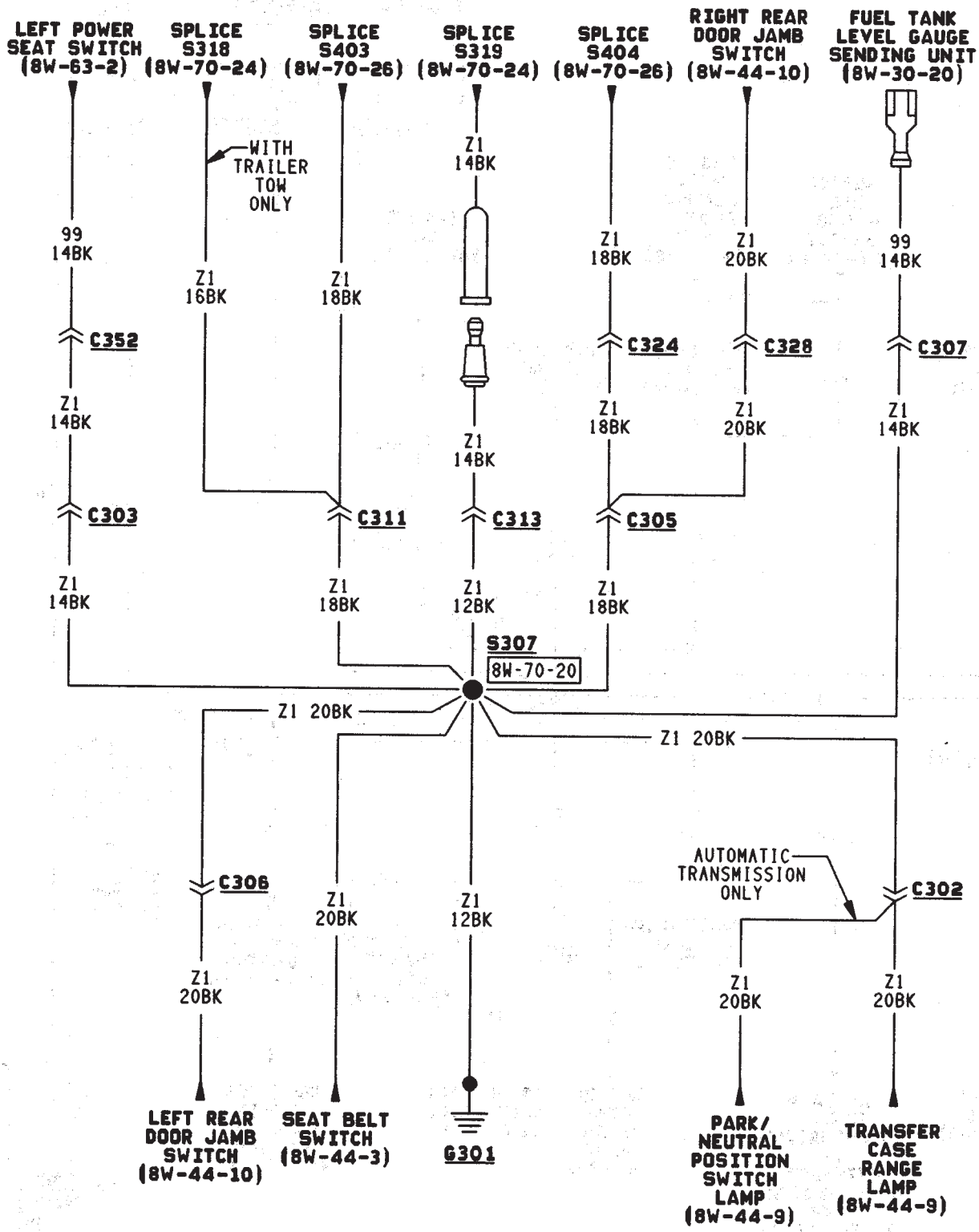
LEFT POWER SEAT SWITCH (8W-63-2)
SPLICE S318 (8W-70-24)
SPLICE S403 (8W-70-26)
SPLICE S319 (8W-70-24)
SPLICE S404 (8W-70-26)
RIGHT REAR DOOR JAMB SWITCH (8W-44-10)
FUEL TANK LEVEL GAUGE SENDING UNIT (8W-30-20)
WITH TRAILER TOW ONLY
99 14BK
Z1 16BK
Z1 18BK
Z1 14BK
Z1 18BK
Z1 20BK
99 14BK
C352
C324
C328
C307
C303
C311
C313
C305
S307
8W-70-20
Z1 20BK
C306
Z1 20BK
Z1 12BK
AUTOMATIC TRANSMISSION ONLY
C302
LEFT REAR DOOR JAMB SWITCH (8W-44-10)
SEAT BELT SWITCH (8W-44-3)
G301
PARK/ NEUTRAL POSITION SWITCH LAMP (8W-44-9)
TRANSFER CASE RANGE LAMP (8W-44-9)

J958W-7

CHARGING SYSTEM

CHARGING SYSTEM

The charging system is an integral part of the battery and starting systems. Because all these systems work in conjunction, diagnose and test them together.

Circuit A11 connects to the generator output terminal and splices to fuse 1 and fuse 8 in the Power Distribution Center (PDC). Circuit A0 connects the battery to the PDC.

Circuit Z0 provides ground for the generator. Circuit Z0 attaches to the right rear of the engine.

When the ignition switch is in either the START or RUN positions, it connects circuit A1 from fuse 6 in the PDC to circuit A21. Circuit A21 splices to supply current to the coil side of the automatic shut down (ASD) relay. The powertrain control module (PCM) provides ground for the relay on circuit K51. Circuit K51 connects to cavity 51 of the PCM.

When the PCM grounds the ASD relay, contacts inside the relay close and connect circuit A18 from fuse 14 in the PDC to circuit A142. Circuit A142 splices to the generator field terminal.

The PCM has an internal voltage regulator that controls generator output. The PCM controls the generator field on circuit K20. Circuit K20 connects to PCM cavity 20.

When the engine operates and there is current in the generator field, the generator produces a B+ voltage. The generator supplies B+ voltage to the battery through the A11 and A0 circuits.

HELPFUL INFORMATION

- If the vehicle is equipped with a 2.5L engine, circuit Z0 also connects to the battery.
- Circuit A14 from fuse 2 in the PDC supplies voltage to the fuse block for fuse 14.
- The ignition switch also connects circuit A1 with circuits A41, A38, and A48.
- Circuit A21 also splices to power fuse 17 in the fuse block.
- Circuit A21 also powers the coil side of the fuel pump relay.
- The ASD relay supplies battery voltage for the fuel injectors, ignition coil, and the heated oxygen sensor. The fuel pump relay powers the fuel pump module.
- Circuit K51 also provides ground for the coil side of the fuel pump relay.

DIAGRAM INDEX

Component	Page
Battery (2.5L)	8W-20-2
Battery (4.0L)	8W-20-3
PDC Fuse 1 (2.5L)	8W-20-2
PDC Fuse 1 (4.0L)	8W-20-3
PDC Fuse 9 (2.5L)	8W-20-2
PDC Fuse 9 (4.0L)	8W-20-3
Generator (2.5L)	8W-20-2
Generator (4.0L)	8W-20-3
Powertrain Control Module (2.5L)	8W-20-2
Powertrain Control Module (4.0L)	8W-20-3

2.5L ENGINE

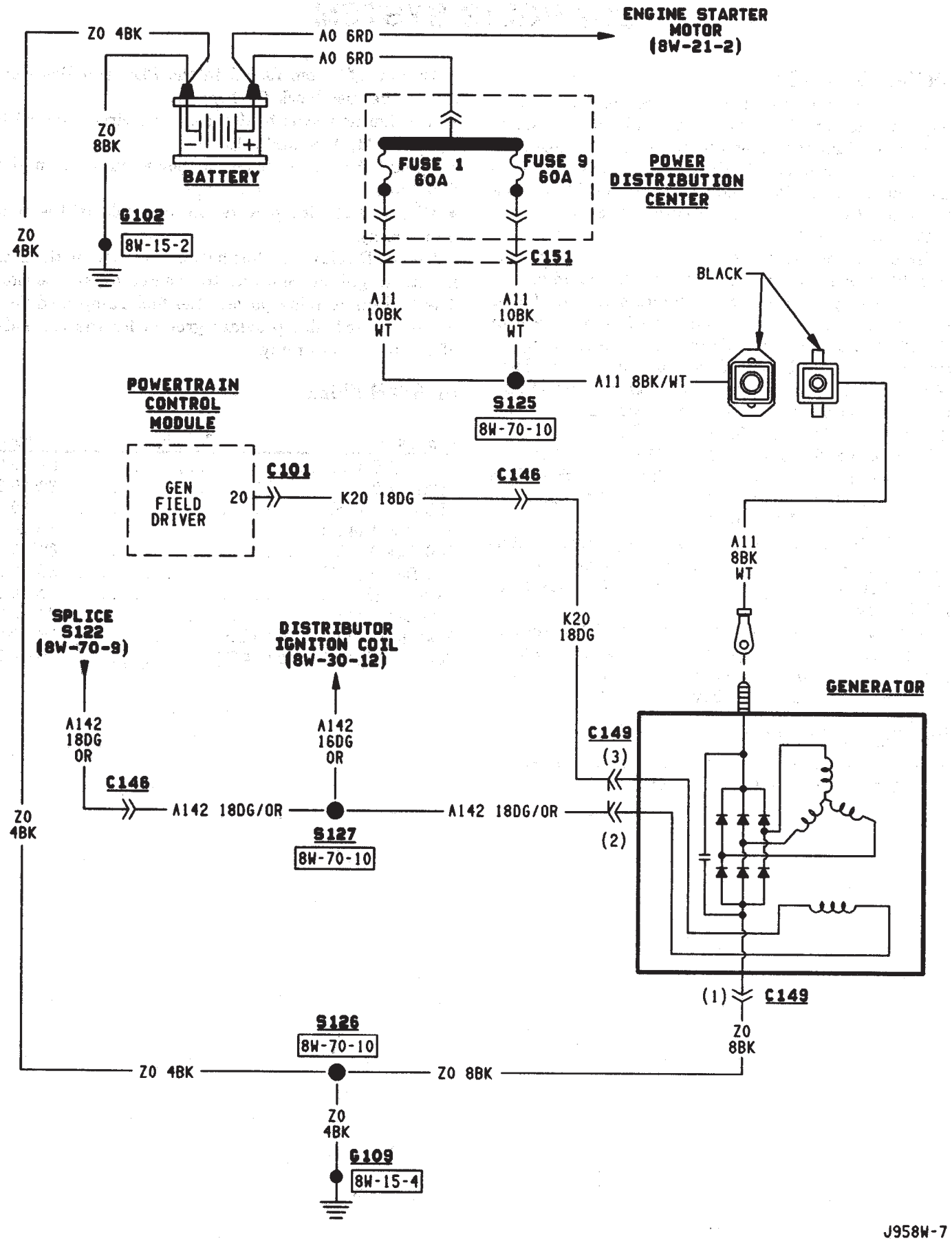

J958W-7

4.0L ENGINE

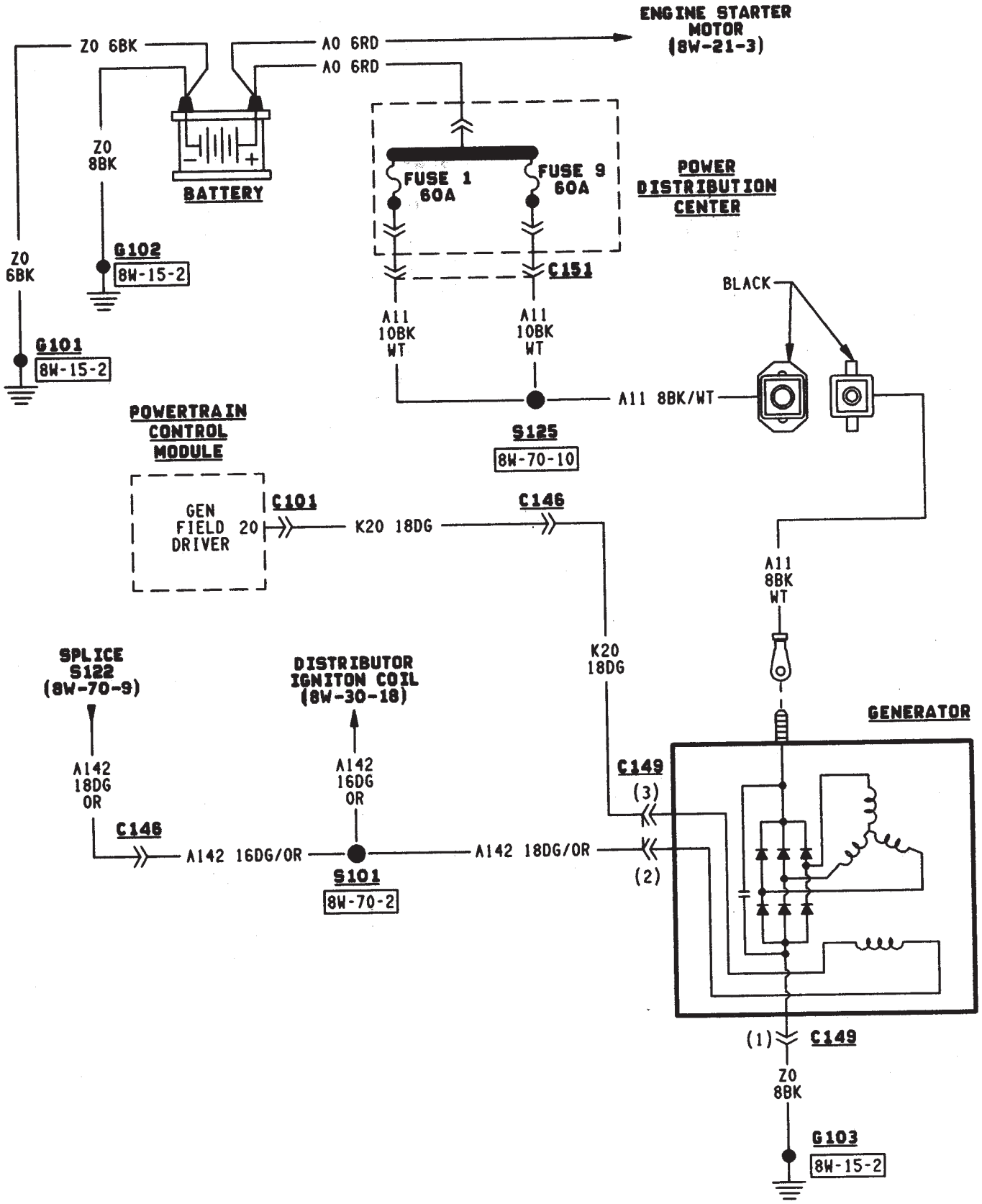

J958W-7

STARTING SYSTEM

INDEX

page

Diagram Index 1
Starting System 1

STARTING SYSTEM

AUTOMATIC TRANSMISSIONS

Circuit A0 from the battery is double crimped at the positive battery post. One branch of circuit A0 (battery positive cable) connects to the engine starter motor. The other A0 branch supplies voltage to the bus bar in the power distribution center (PDC).

Fuse 7 in the PDC supplies battery voltage to the contact side of the engine starter motor relay on circuit A4. When the coil side of the engine starter motor relay energizes, the contacts close and connect circuit A4 to circuit T40. Circuit T40 supplies battery voltage to the starter motor solenoid.

The ignition switch supplies battery voltage to the coil side of the starter motor relay on circuit A41 when the key is moved to the START position and the PARK/NEUTRAL position switch is closed. Ground for the coil side of the starter motor relay is supplied by the case grounded PARK/NEUTRAL position switch. Circuit T41 connects the coil side of the relay to the PARK/NEUTRAL position switch.

When the starter motor relay energizes and the contacts close, circuit T40 supplies battery voltage to the starter motor solenoid. Circuit A0 from the battery supplies voltage to the starter motor when the solenoid energizes.

MANUAL TRANSMISSIONS

Circuit A0 from the battery is double crimped at the positive battery post. One branch of circuit A0 (battery positive cable) connects to the battery starter motor. The other A0 branch supplies voltage to the buss bar in the power distribution center (PDC).

Fuse 7 in the PDC supplies battery voltage to the contact side of the engine starter motor relay on circuit A4. When the coil side of the engine starter motor relay energizes, the contacts close and connect circuit A4 to circuit T40. Circuit T40 supplies battery voltage to the starter motor solenoid.

The ignition switch supplies battery voltage to the coil side of the starter motor relay on circuit A41 when the key is moved to the START position. Circuit Z12 provides ground for the coil side of the relay.

When the starter motor relay energizes and the contacts close, circuit T40 supplies battery voltage to the starter motor solenoid. Circuit A0 from the battery supplies voltage to the starter motor when the solenoid energizes.

HELPFUL INFORMATION

- The Park/Neutral switch closes when the transmission is in either the PARK or NEUTRAL positions.
- Circuit T41 also connects to cavity 30 of the powertrain control module (PCM). This input tells the PCM the operator is starting the vehicle.
- Circuit A4 is double crimped at the contact side of the starter motor relay. The A4 branch leaving the relay powers fuse 13 in the PDC.

DIAGRAM INDEX

Component	Page
Battery (2.5L)	8W-21-2
Battery (4.0L)	8W-21-3
Engine Starter Motor (2.5L)	8W-21-2
Engine Starter Motor (4.0L)	8W-21-3
Engine Starter Motor Relay (2.5L)	8W-21-2
Engine Starter Motor Relay (4.0L)	8W-21-3
Ignition Switch (2.5L)	8W-21-2
Ignition Switch (4.0L)	8W-21-3
PDC Fuse 6 (2.5L)	8W-21-2
PDC Fuse 6 (4.0L)	8W-21-3
PDC Fuse 7 (2.5L)	8W-21-2
PDC Fuse 7 (4.0L)	8W-21-3
Powertrain Control Module (2.5L)	8W-21-2
Powertrain Control Module (4.0L)	8W-21-3
Park/Neutral Position Switch (2.5L)	8W-21-2
Park/Neutral Position Switch (4.0L)	8W-21-3

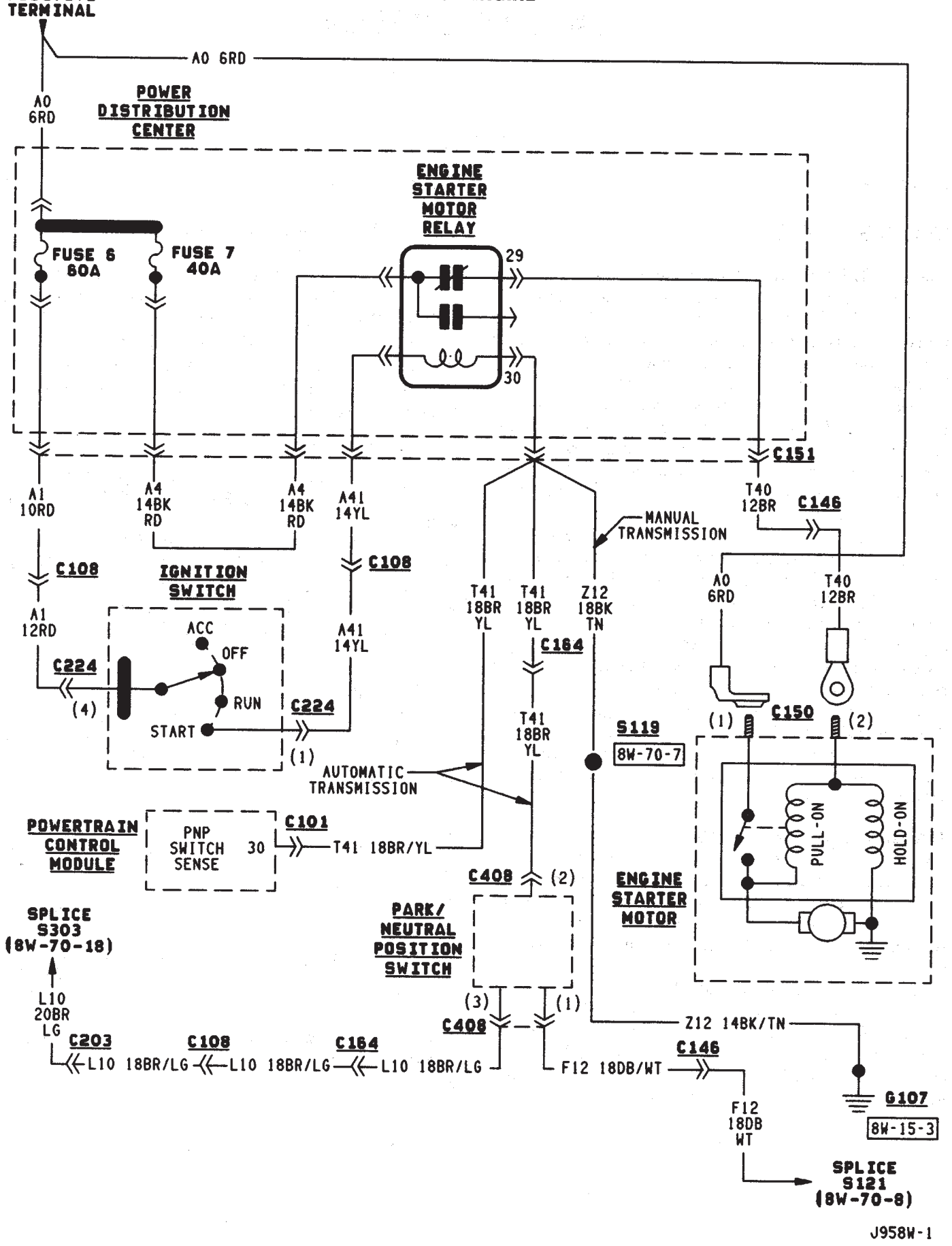
BATTERY POSITIVE TERMINAL
A0 6RD
POWER DISTRIBUTION CENTER
FUSE 6 60A
FUSE 7 40A
ENGINE STARTER MOTOR RELAY
29
30
C151
A1 10RD
A4 14BK RD
A4 14BK RD
A41 14YL
T40 12BR
C146
MANUAL TRANSMISSION
C108
IGNITION SWITCH
ACC
OFF
RUN
START
C224
(4)
(1)
A1 12RD
A41 14YL
T41 18BR YL
T41 18BR YL
Z12 18BK TN
C164
T41 18BR YL
A0 6RD
T40 12BR
C150
(1)
(2)
S119
8W-70-7
AUTOMATIC TRANSMISSION
POWERTRAIN CONTROL MODULE
PNP SWITCH SENSE
30
C101
T41 18BR/YL
C408
(2)
PULL-IN
HOLD-IN
ENGINE STARTER MOTOR
PARK/ NEUTRAL POSITION SWITCH
SPLICE S303 (8W-70-18)
L10 20BR LG
C203
C108
C164
C146
L10 18BR/LG
L10 18BR/LG
L10 18BR/LG
F12 18DB/WT
Z12 14BK/TN
G107
8W-15-3
F12 18DB WT
SPLICE S121 (8W-70-8)
J958W-1

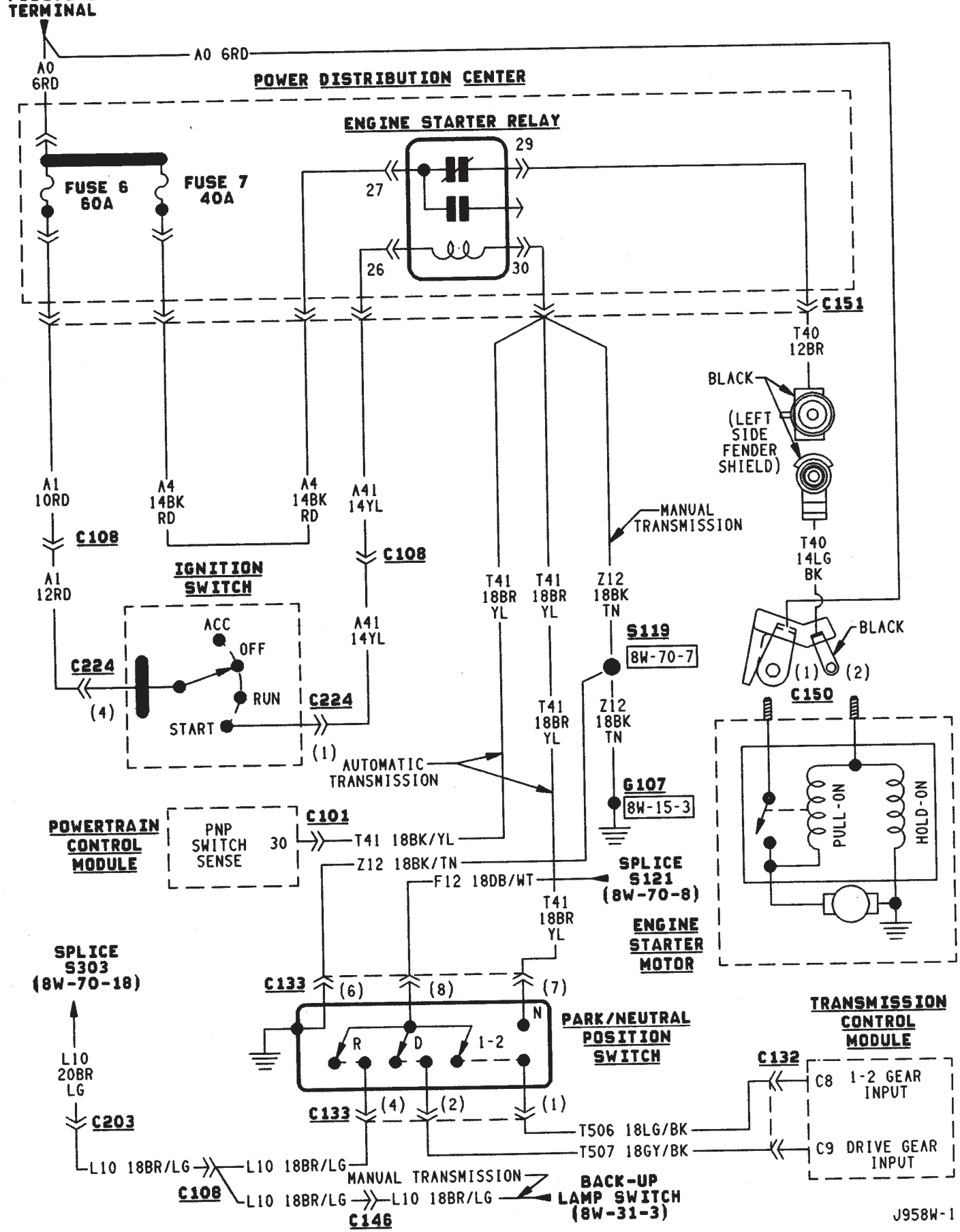
BATTERY POSITIVE TERMINAL
A0 6RD
A0 6RD
POWER DISTRIBUTION CENTER
ENGINE STARTER RELAY
29
27
26
30
FUSE 6 60A
FUSE 7 40A
C151
T40 12BR
BLACK
(LEFT SIDE FENDER SHIELD)
T40 14LG BK
BLACK
(1)
(2)
C150
PULL-ON
HOLD-ON
A1 10RD
C108
A1 12RD
A4 14BK RD
A4 14BK RD
A41 14YL
C108
A41 14YL
MANUAL TRANSMISSION
T41 18BR YL
T41 18BR YL
Z12 18BK TN
S119
8W-70-7
IGNITION SWITCH
ACC
OFF
RUN
START
C224
(4)
C224
(1)
T41 18BR YL
Z12 18BK TN
AUTOMATIC TRANSMISSION
G107
8W-15-3
POWERTRAIN CONTROL MODULE
PNP SWITCH SENSE
30
C101
T41 18BK/YL
Z12 18BK/TN
F12 18DB/WT
SPLICE S121 (8W-70-8)
T41 18BR YL
ENGINE STARTER MOTOR
SPLICE S303 (8W-70-18)
C133
(6)
(8)
(7)
N
R
D
1-2
PARK/NEUTRAL POSITION SWITCH
TRANSMISSION CONTROL MODULE
C132
C8 1-2 GEAR INPUT
C9 DRIVE GEAR INPUT
L10 20BR LG
C203
C133
(4)
(2)
(1)
T506 18LG/BK
T507 18GY/BK
L10 18BR/LG
L10 18BR/LG
C108
MANUAL TRANSMISSION
L10 18BR/LG
L10 18BR/LG
C146
BACK-UP LAMP SWITCH (8W-31-3)
J958W-1

FUEL/IGNITION

INDEX

	page
Automatic Shut Down (ASD) Relay	1
Battery Feed	1
Brake Switch Input	5
Camshaft Position Sensor	3
CCD Bus	5
Crankshaft Position Sensor	3
Data Link Connector	5
Diagram Index —2.5L Engine	6
Diagram Index —4.0L Engine	6
Engine Coolant Temperature Sensor	3
Extended Idle Switch	5
Fuel Injectors	1
Fuel Pump Module	2
Fuel Pump Relay	2
Heated Oxygen Sensor	3
Idle Air Control (IAC) Motor	2
Ignition Coil	2
Ignition Switch	1
Intake Air Temperature Sensor	4
Malfunction Indicator Lamp (MIL)	5
Manifold Absolute Pressure Sensor	4
Park/Neutral Position Switch	4
Power (Device) Ground	5
Power Steering Pressure Switch	5
Tachometer Signal	5
Throttle Position Sensor	4
Torque Converter Clutch (TCC) Solenoid and Relay	4
Upshift Lamp	5
Vehicle Speed Sensor	2

IGNITION SWITCH

Circuit A1 from fuse 11 in the power distribution center (PDC), supplies battery voltage to the ignition switch. Depending upon position, the ignition switch powers circuits A21, A38, A41, or A48.

START POSITION

In the START position, the ignition switch connects circuit A1 to circuit A41. Circuit A41 connects to the coil side of the starter motor relay.

Additionally in the START position, the case grounded ignition switch provides ground for the brake lamp switch and the warning lamps in the instrument cluster.

START OR RUN POSITION

In the START or RUN position, the ignition switch connects circuit A1 to circuit A21. Circuit A21 splices to power fuse 17 in the fuse block and the coil side of the Automatic Shut Down (ASD) relay and the fuel pump relay.

RUN (ONLY) POSITION

When the ignition switch is in the RUN position, it connects circuit A1 to circuit A38. Circuit A22 splices to power fuses 1 and 7 in the fuse block.

- Fuse 1 powers the rear wiper system on circuit V15.
- Fuse 7 feeds the Anti-Lock Brake System (ABS) on circuit 236.

ACCESSORY OR RUN POSITIONS

In the ACCESSORY or RUN positions, the ignition switch connects circuit A1 to circuit A48. Circuit A48 connects to a bus bar in the fuse block that feeds fuses 2, 5, and 8.

AUTOMATIC SHUT DOWN (ASD) RELAY

When the ignition switch is in either the START or RUN positions, it connects circuit A1 from fuse 6 in the Power Distribution Center (PDC) to circuit A21. Circuit A21 supplies battery voltage to the coil side of the Automatic Shut Down (ASD) relay. The Powertrain Control Module (PCM) provides ground for the relay on circuit K51. Circuit K51 connects to cavity 51 of the PCM.

When the PCM grounds the ASD relay, contacts inside the relay close and connect circuit A18 from fuse 14 in the PDC to circuit A142. Circuit A142 splices to the generator field terminal, fuel injectors, and ignition coil. Circuit A142 also connects to cavity 57 of the PCM.

HELPFUL INFORMATION

- Along with supplying voltage to the coil side of the ASD relay, circuit A21 also supplies voltage to the coil side of the fuel pump relay.

BATTERY FEED

Circuit A14 from fuse 2 in the Power Distribution Center (PDC) supplies battery voltage to cavity 3 of the powertrain control module.

HELPFUL INFORMATION

Circuit A14 also supplies power to the contact sides of the fuel pump relay and fuse F2 in the PDC. Fuse F2 powers circuit A18 which supplies voltage to the contact side of the automatic shut down relay.

FUEL INJECTORS

When the Automatic Shut Down (ASD) relay contacts close, they connect circuits A14 and A142. Cir-

cuit A142 supplies voltage to the fuel injectors. Each injector has a separate ground circuit controlled by the PCM.

Circuit K11 provides ground for injector number one. The K11 circuit connects to cavity 16 of the PCM.

Circuit K12 provides ground for injector number two. The K12 circuit connects to cavity 15 of the PCM.

Circuit K13 provides ground for injector number three. The K13 circuit connects to cavity 14 of the PCM.

Circuit K14 provides ground for injector number four. The K14 circuit connects to cavity 13 of the PCM.

On the 4.0L engine, circuit K15 provides ground for injector number five. The K15 circuit connects to cavity 38 of the PCM.

Also on the 4.0L engine, circuit K16 provides ground for injector number six. The K16 circuit connects to cavity 58 of the PCM.

HELPFUL INFORMATION

- Circuit A142 splices to supply voltage to the fuel injectors, ignition coil, PCM, generator.
- For information about fuel injector operation, refer to Group 14.

IGNITION COIL

When the Automatic Shut Down (ASD) relay contacts close, they connect circuits A14 and A142. Circuit A142 supplies voltage to the fuel injectors. Circuit A142 splices to supply voltage to the ignition coil. The PCM controls the ground path for the ignition coil on circuit K19. Circuit K19 connects to cavity 19 of the PCM.

HELPFUL INFORMATION

Circuit A142 splices to supply voltage to the fuel injectors, ignition coil, PCM, and generator.

FUEL PUMP RELAY

When the ignition switch is in either the START or RUN positions, it connects circuit A1 from fuse 6 in the Power Distribution Center (PDC) to circuit A21. Circuit A21 supplies battery voltage to the coil side of the fuel pump relay. The Powertrain Control Module (PCM) provides ground for the relay on circuit K51. Circuit K51 connects to cavity 51 of the PCM.

When the PCM grounds the fuel pump relay, contacts inside the relay close and connect circuit A14 from fuse 2 in the PDC to circuit A141. Circuit A141 supplies voltage to the fuel pump motor (part of the in-tank fuel pump module).

HELPFUL INFORMATION

- Circuit A14 also splices to supply battery voltage to cavity 3 of the PCM.
- Circuit A141 also supplies battery voltage to the heated oxygen sensor.

FUEL PUMP MODULE

FUEL PUMP MOTOR

When the fuel pump relay contacts close, the relay supplies voltage to the fuel pump motor. Circuit A141 from the relay supplies voltage to circuit A241. Circuit A241 connects to circuit F9 in the fuel pump module harness. Circuit F9 connects to the fuel pump motor.

Circuit 99 in the fuel pump module harness connects to circuit Z1. Circuit Z1 provides ground for the fuel pump motor.

FUEL LEVEL SENSOR

The fuel level sensor is a variable resistor. Circuit G4 connects the fuel level sensor to the fuel gauge in the instrument cluster. Circuit F87 from fuse 17 in the fuse block supplies voltage to the fuel gauge. The fuel level sensor draws voltage from circuit F87 through the fuel gauge on circuit G4. Circuit G4 connects to circuit 57 in the fuel pump module harness. Circuit 57 connects to the fuel level sensor.

Circuit 99 in the fuel pump module harness connects to circuit Z1. Circuit Z1 provides the ground path for the fuel level sensor. The grounding point for circuit Z1 is the left side of the cowl panel.

HELPFUL INFORMATION

As current flows through the coils in the fuel gauge, it creates a magnetic field. One of the coils in the gauge receives fixed current. The other coil is connected to the level sensor. The magnetic field controls the position of the fuel gauge pointer.

The fuel level sensor contains a variable resistor. As the position of the float arm on the fuel level sensor changes, the resistor changes the current flow through second coil in the fuel gauge. A change in current flow alters the magnetic field in the fuel gauge, which changes the pointer position.

IDLE AIR CONTROL (IAC) MOTOR

The Powertrain Control Module (PCM) operates the idle air control motor through 4 circuits - K39, K40, K59, and K60. Each circuit connects to separate cavities in the PCM connector.

- Circuit K39 connects to cavity 39 of the PCM
- Circuit K40 connects to cavity 40 of the PCM
- Circuit K59 connects to cavity 59 of the PCM
- Circuit K60 connects to cavity 60 of the PCM

VEHICLE SPEED SENSOR

Circuit K7 supplies 8 volts from the Powertrain Control Module (PCM) to the vehicle speed sensor. The K7 circuit connects to cavity 7 of the PCM.

Circuit G7 from the vehicle speed sensor provides an input signal to the PCM. The G7 circuit connects to cavity 47 of the PCM.

The PCM provides a ground for the vehicle speed sensor signal (circuit G7) through circuit K4. Circuit K4 connects to cavity 4 of the PCM.

HELPFUL INFORMATION

- Circuit G7 splices to the speedometer, and daytime running lights module (DRL).
- Circuit K7 splices to supply 8 volts to the camshaft position sensor and crankshaft position sensor.

Circuit K4 splices to supply ground for the signals from the following:

- Heated oxygen sensor
- Camshaft position sensor
- Crankshaft position sensor
- Throttle position sensor
- Manifold absolute pressure sensor
- Engine coolant temperature sensor
- Intake air temperature sensor

HEATED OXYGEN SENSOR

When the fuel pump relay contacts close, they connect circuits A14 and A141. Circuit A141 splices to supply voltage to the heated oxygen sensor.

Circuit K41 delivers the signal from the heated oxygen sensor to the PCM. Circuit K41 connects to cavity 41 of the PCM.

The PCM provides a ground for the heated oxygen sensor signal (circuit K41) through circuit K4. Circuit K4 connects to cavity 4 of the PCM connector.

Circuit Z12 provides a ground for the heater circuit in the sensor.

Circuit Z12 terminates at the right side of the engine.

HELPFUL INFORMATION

- Circuit A141 also supplies battery voltage to the fuel pump.

Circuit K4 splices to supply ground for the signals from the following:

- Heated oxygen sensor
- Camshaft position sensor
- Crankshaft position sensor
- Intake air temperature sensor
- Throttle position sensor
- Manifold absolute pressure sensor
- Engine coolant temperature sensor
- Vehicle speed sensor

CAMSHAFT POSITION SENSOR

The Powertrain Control Module (PCM) supplies 8 volts to the camshaft position sensor (in distributor) on circuit K7. Circuit K7 connects to cavity 7 of the PCM.

The PCM receives the camshaft position sensor signal on circuit K44. Circuit K44 connects to cavity 44 of the PCM.

The PCM provides a ground for the camshaft position sensor signal (circuit K44) through circuit K4. Circuit K4 connects to cavity 4 of the PCM.

HELPFUL INFORMATION

- Circuit K7 splices to supply 8 volts to the crankshaft position sensor and the vehicle speed sensor.

Circuit K4 splices to supply ground for the signals from the following:

- Heated oxygen sensor
- Camshaft position sensor
- Crankshaft position sensor
- Intake air temperature sensor
- Throttle position sensor
- Manifold absolute pressure sensor
- Engine coolant temperature sensor
- Vehicle speed sensor

CRANKSHAFT POSITION SENSOR

The Powertrain Control Module (PCM) supplies 8 volts to the crankshaft position sensor on circuit K7. Circuit K7 connects to cavity 7 of the PCM.

The PCM receives the crankshaft position sensor signal on circuit K24. Circuit K24 connects to cavity 24 of the PCM.

The PCM provides a ground for the crankshaft position sensor (circuit K24) through circuit K4. Circuit K4 connects to cavity 4 of the PCM.

HELPFUL INFORMATION

- Circuit K7 splices to supply 8 volts to the camshaft position sensor and the vehicle speed sensor.

Circuit K4 splices to supply ground for the signals from the following:

- Heated oxygen sensor
- Camshaft position sensor
- Crankshaft position sensor
- Intake air temperature sensor
- Throttle position sensor
- Manifold absolute pressure sensor
- Engine coolant temperature sensor
- Vehicle speed sensor

ENGINE COOLANT TEMPERATURE SENSOR

The engine coolant temperature sensor provides an input to the Powertrain Control Module (PCM) on circuit K2. From circuit K2, the engine coolant temperature sensor draws up to 5 volts from the PCM. The sensor is a variable resistor. As coolant temperature changes, the resistance in the sensor changes, causing a change in current draw. The K2 circuit connects to cavity 2 of the PCM.

The PCM provides a ground for the engine coolant temperature sensor signal (circuit K2) through circuit K4. Circuit K4 connects to cavity 4 of the PCM connector.

HELPFUL INFORMATION

Circuit K4 splices to supply ground for the signals from the following:
- Heated oxygen sensor
- Camshaft position sensor
- Crankshaft position sensor
- Intake air temperature sensor
- Throttle position sensor
- Manifold absolute pressure sensor
- Engine coolant temperature sensor
- Vehicle speed sensor

THROTTLE POSITION SENSOR

From the Powertrain Control Module (PCM), circuit K6 supplies 5 volts to the throttle position sensor (TPS). Circuit K6 connects to cavity 6 of the PCM.

Circuit K22 delivers the TPS signal to the PCM. Circuit K22 connects to cavity 22 of the PCM.

The PCM provides a ground for the throttle position sensor signal (circuit K22) through circuit K4. Circuit K4 connects to cavity 4 of the PCM.

HELPFUL INFORMATION

Refer to Group 14 for throttle position sensor operation.

Circuit K6 splices to supply 5 volts to the manifold absolute pressure sensor.

On vehicles equipped with the 4.0L engine and automatic transmission, circuit K22 splices to the transmission control module.

Circuit K4 splices to supply ground for the signals from the following:
- Heated oxygen sensor
- Camshaft position sensor
- Crankshaft position sensor
- Intake air temperature sensor
- Throttle position sensor
- Manifold absolute pressure sensor
- Engine coolant temperature sensor
- Vehicle speed sensor

MANIFOLD ABSOLUTE PRESSURE SENSOR

From the Powertrain Control Module (PCM), circuit K6 supplies 5 volts to the manifold absolute pressure (MAP) sensor. Circuit K6 connects to cavity 6 of the PCM.

Circuit K1 delivers the MAP signal to the PCM. Circuit K1 connects to cavity 1 of the PCM.

The PCM provides a ground for the MAP sensor signal (circuit K1) through circuit K4. Circuit K4 connects to cavity 4 of the PCM.

HELPFUL INFORMATION

Refer to Group 14 for MAP sensor operation.

Circuit K6 splices to supply 5 volts to the throttle position sensor.

Circuit K4 splices to supply ground for the signals from the following:
- Heated oxygen sensor
- Camshaft position sensor
- Crankshaft position sensor
- Intake air temperature sensor
- Throttle position sensor
- Manifold absolute pressure sensor
- Engine coolant temperature sensor
- Vehicle speed sensor

INTAKE AIR TEMPERATURE SENSOR

The intake air temperature sensor provides an input to the Powertrain Control Module (PCM) on circuit K21. Circuit K21 connects to cavity 21 of the PCM.

From circuit K21, the intake air temperature sensor draws voltage from the PCM. The sensor is a variable resistor. As intake air temperature changes, the resistance in the sensor changes, causing a change in current draw.

The PCM provides a ground for the intake air temperature sensor signal (circuit K21) through circuit K4. Circuit K4 connects to cavity 4 of the PCM.

HELPFUL INFORMATION

Circuit K4 splices to supply ground for the signals from the following:
- Heated oxygen sensor
- Camshaft position sensor
- Crankshaft position sensor
- Intake air temperature sensor
- Throttle position sensor
- Manifold absolute pressure sensor
- Engine coolant temperature sensor
- Vehicle speed sensor

PARK/NEUTRAL POSITION SWITCH

When closed, the case-grounded park/neutral position switch provides a ground path on circuit T41 for the coil side of the starter motor relay. Circuit A41 from the ignition switch provides battery voltage to the coil side of the relay.

Circuit T41 splices to cavity 30 of the PCM. The park/neutral position switch provides an input to the Powertrain Control Module (PCM).

TORQUE CONVERTER CLUTCH (TCC) SOLENOID AND RELAY

The TCC solenoid is only used on 2.5L engines with the three-speed automatic transmissions. The Powertrain Control Module (PCM) operates the TCC solenoid by energizing the TCC relay.

Circuit T17 from fuse 3 in the power distribution center supplies voltage to the coil and contact sides of the TCC relay. When the PCM provides a ground path on circuit K54 for the coil side of the relay, the relay contacts close.

When the relay contacts close, they connect circuit T17 with circuit T22. Circuit T22 supplies battery voltage to the case grounded TCC solenoid. Circuit K54 connects to PCM cavity 54.

HELPFUL INFORMATION

- In the RUN or START position, the ignition switch connects circuit A1 from fuse 4 in the PDC to circuit A21.

UPSHIFT LAMP

On vehicles equipped with a manual transmission, the PCM grounds the up-shift lamp on circuit K54. Circuit K54 connects to cavity 54 of the PCM.

POWER STEERING PRESSURE SWITCH

The PCM supplies voltage to the power steering pressure switch on circuit K10. Circuit Z12 provides ground for the switch. When the switch closes, voltage flows through the switch to ground on circuit Z12. The switch closes during periods of high power steering pump load and low engine speed; such as parking maneuvers.

Circuit K10 connects to cavity 10 of the PCM. Circuit Z12 terminates at the right rear of the engine.

TACHOMETER SIGNAL

The PCM supplies the signal for the tachometer on circuit G21. Circuit G21 connects to cavity 43 of the PCM.

MALFUNCTION INDICATOR LAMP (MIL)

The PCM provides ground for the instrument cluster malfunction indicator lamp on circuit G3. The MIL displays the message CHECK ENGINE when illuminated. Circuit F87 provides voltage for the lamp.

DATA LINK CONNECTOR

Circuit F12 supplies battery voltage to the data link connector. Circuit F12 originates at fuse 11 in the Power Distribution Center.

Circuit D20 connects to cavity 45 of the PCM. Circuit D20 is the SCI receive circuit for the PCM.

Circuit D21 connects to cavity 25 of the PCM. Circuit D21 is the SCI transmit circuit for the PCM.

Circuit Z11 provides ground for the data link connector. Circuit Z11 terminates at the right rear of the engine. Circuit Z11 also connects to cavity 5 of the PCM.

HELPFUL INFORMATION

- Circuit Z1 also supplies a ground for the PCM high current drivers.
- If the system loses ground for the Z11 circuits at the right rear of the engine, the vehicle will not operate. Check the connection at the ganged-ground circuit eyelet.
- Circuit F12 splices to supply battery voltage to the vehicle speed control switch, back-up lamp switch, A/C compressor clutch relay, windshield washer fluid level sensor and radiator fan relay (4.0L engines).

BRAKE SWITCH INPUT

Circuit K29 provides the brake switch input to the PCM. Circuit V40 connects to cavity 29 of the PCM.

POWER (DEVICE) GROUND

Circuit Z12 connects to cavities 11 and 12 of the PCM. The Z12 circuit provides ground for PCM internal drivers that operate high current devices like the injectors and ignition coil.

Internal to the PCM, the power (device) ground circuit connects to the PCM sensor return circuit (from circuit K4).

HELPFUL INFORMATION

- The grounding point for circuit Z12 is the right rear of the engine.
- If the system loses ground for the Z12 circuits at the rear of the engine, the vehicle will not operate. Check the connection at the ganged-ground circuit eyelet.
- On vehicles equipped with the 4.0L engine and automatic transmission, circuit Z12 splices to provide ground for the transmission control module.

EXTENDED IDLE SWITCH

On Police Package vehicles, an optional extended idle switch provides an input to the Powertrain Control Module (PCM) on circuit K10. Circuit K10 connects to cavity 10 of the PCM. Circuit F60 supplies battery voltage to the extended idle switch. Circuit Z1 grounds the switch.

CCD BUS

On vehicles equipped with the 4.0L engine, circuits D1 and D2 connect the Powertrain Control Module (PCM) to the CCD Bus. Circuit D1 connects to cavity 26 of the PCM. Circuit D2 connects to cavity 46 of the PCM. Circuits D1 and D2 are a twisted pair of wires.

DIAGRAM INDEX—2.5L ENGINE

Component	Page
Automatic Shut Down Relay	8W-30-8
Camshaft Position Sensor	8W-30-10
Crankshaft Position Sensor	8W-30-11
Data Link Connector	8W-30-12
Distributor Ignition Coil	8W-30-12
Engine Coolant Temperature Sensor	8W-30-11
Fuel Injector #1	8W-30-9
Fuel Injector #2	8W-30-9
Fuel Injector #3	8W-30-9
Fuel Injector #4	8W-30-9
Fuel Pump Relay	8W-30-20
Fuel Tank Gauge Level Sending Unit	8W-30-20
Fuse 2 (PDC)	8W-30-8, 20
Fuse 6 (PDC)	8W-30-8, 20
Fuse 11 (PDC)	8W-30-12
Fuse 14 (PDC)	8W-30-8
Heated Oxygen Sensor	8W-30-7
Idle Air Control Motor	8W-30-7
Ignition Switch	8W-30-8, 20
Instrument Cluster	8W-30-12, 20
Intake Air Temperature Sensor	8W-30-11
MAP Sensor	8W-30-10
Powertrain Control Module	8W-30-7 thru 12, 19, 20
Power Steering Pressure Switch	8W-30-7
Throttle Position Sensor	8W-30-10
Vehicle Speed Sensor	8W-30-12

DIAGRAM INDEX—4.0L ENGINE

Component	Page
Automatic Shut Down Relay	8W-30-14
Camshaft Position Sensor	8W-30-16
Crankshaft Position Sensor	8W-30-16
Data Link Connector	8W-30-18
Distributor Ignition Coil	8W-30-18
Engine Coolant Temperature Sensor	8W-30-17
Extended Idle Switch	8W-30-19
Extended Idle Switch Lamp	8W-30-19
Fuel Injector #1	8W-30-15
Fuel Injector #2	8W-30-15
Fuel Injector #3	8W-30-15
Fuel Injector #4	8W-30-15
Fuel Injector #5	8W-30-15
Fuel Injector #6	8W-30-15
Fuel Pump Relay	8W-30-20
Fuel Tank Gauge Level Sending Unit	8W-30-20
Fuse 2 (PDC)	8W-30-14, 20
Fuse 3 (Fuse Block)	8W-30-19
Fuse 5 (PDC)	8W-30-19
Fuse 6 (PDC)	8W-30-14, 19, 20
Fuse 14 (PDC)	8W-30-14
Fuse 15 (Fuse Block)	8W-30-19
Fuse 19 (Fuse Block)	8W-30-19
Headlamp Switch	8W-30-19
Heated Oxygen Sensor	8W-30-13
Idle Air Control Motor	8W-30-13
Ignition Switch	8W-30-14, 19, 20
Instrument Cluster	8W-30-18
Intake Air Temperature Sensor	8W-30-17
MAP Sensor	8W-30-16
Powertrain Control Module	8W-30-13 thru 20
Throttle Position Sensor	8W-30-16
Vehicle Speed Sensor	8W-30-18

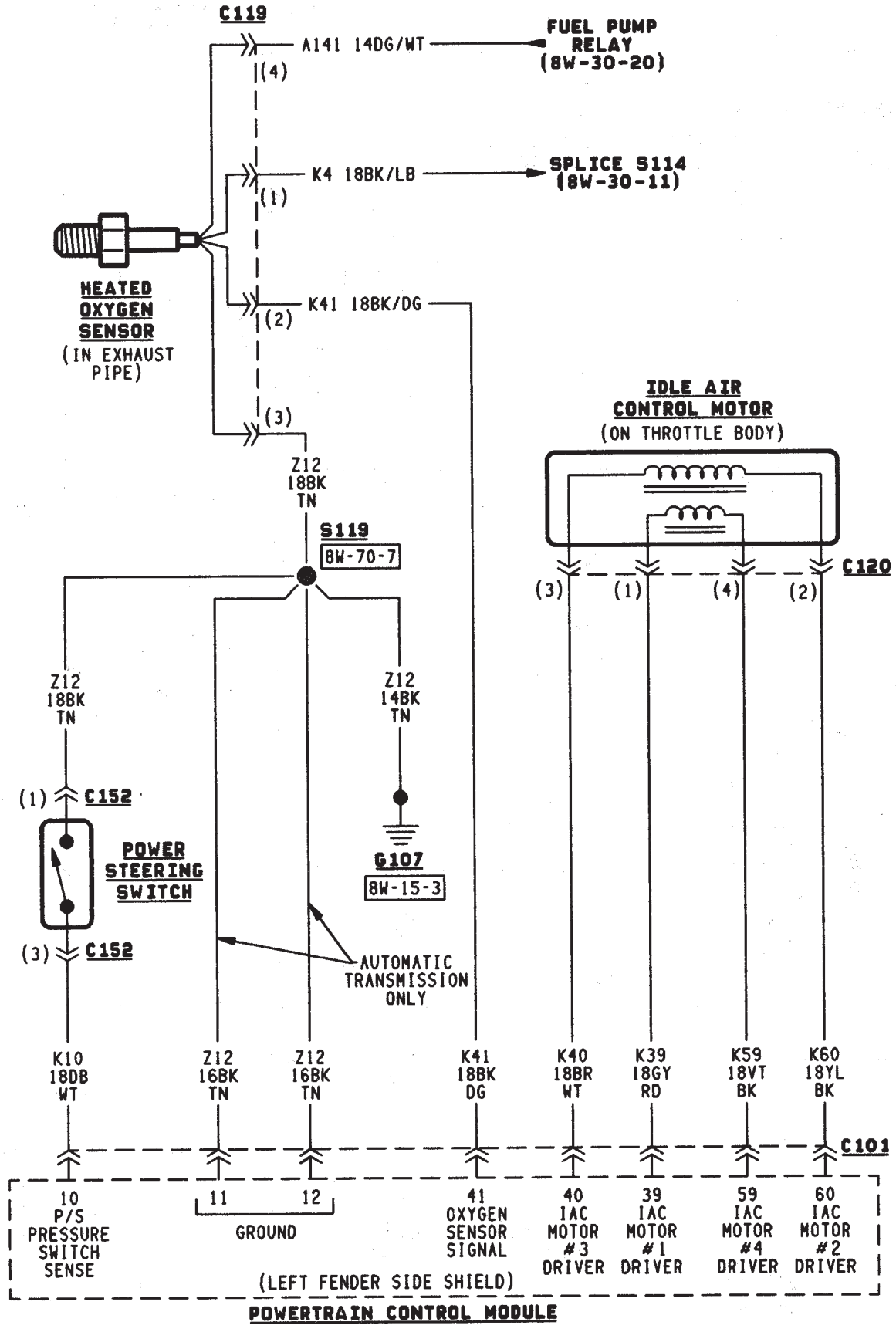
C119
A141 14DG/WT
FUEL PUMP RELAY (8W-30-20)
(4)
K4 18BK/LB
SPLICE S114 (8W-30-11)
(1)
HEATED OXYGEN SENSOR
(IN EXHAUST PIPE)
K41 18BK/DG
(2)
(3)
IDLE AIR CONTROL MOTOR
(ON THROTTLE BODY)
Z12 18BK TN
S119
8W-70-7
C120
(3) (1) (4) (2)
Z12 18BK TN
Z12 14BK TN
(1) C152
POWER STEERING SWITCH
G107
8W-15-3
(3) C152
AUTOMATIC TRANSMISSION ONLY
K10 18DB WT
Z12 16BK TN
Z12 16BK TN
K41 18BK DG
K40 18BR WT
K39 18GY RD
K59 18VT BK
K60 18YL BK
C101
10 P/S PRESSURE SWITCH SENSE
11 12 GROUND
41 OXYGEN SENSOR SIGNAL
40 IAC MOTOR #3 DRIVER
39 IAC MOTOR #1 DRIVER
59 IAC MOTOR #4 DRIVER
60 IAC MOTOR #2 DRIVER
(LEFT FENDER SIDE SHIELD)
POWERTRAIN CONTROL MODULE

J958W-7

2.5L ENGINE

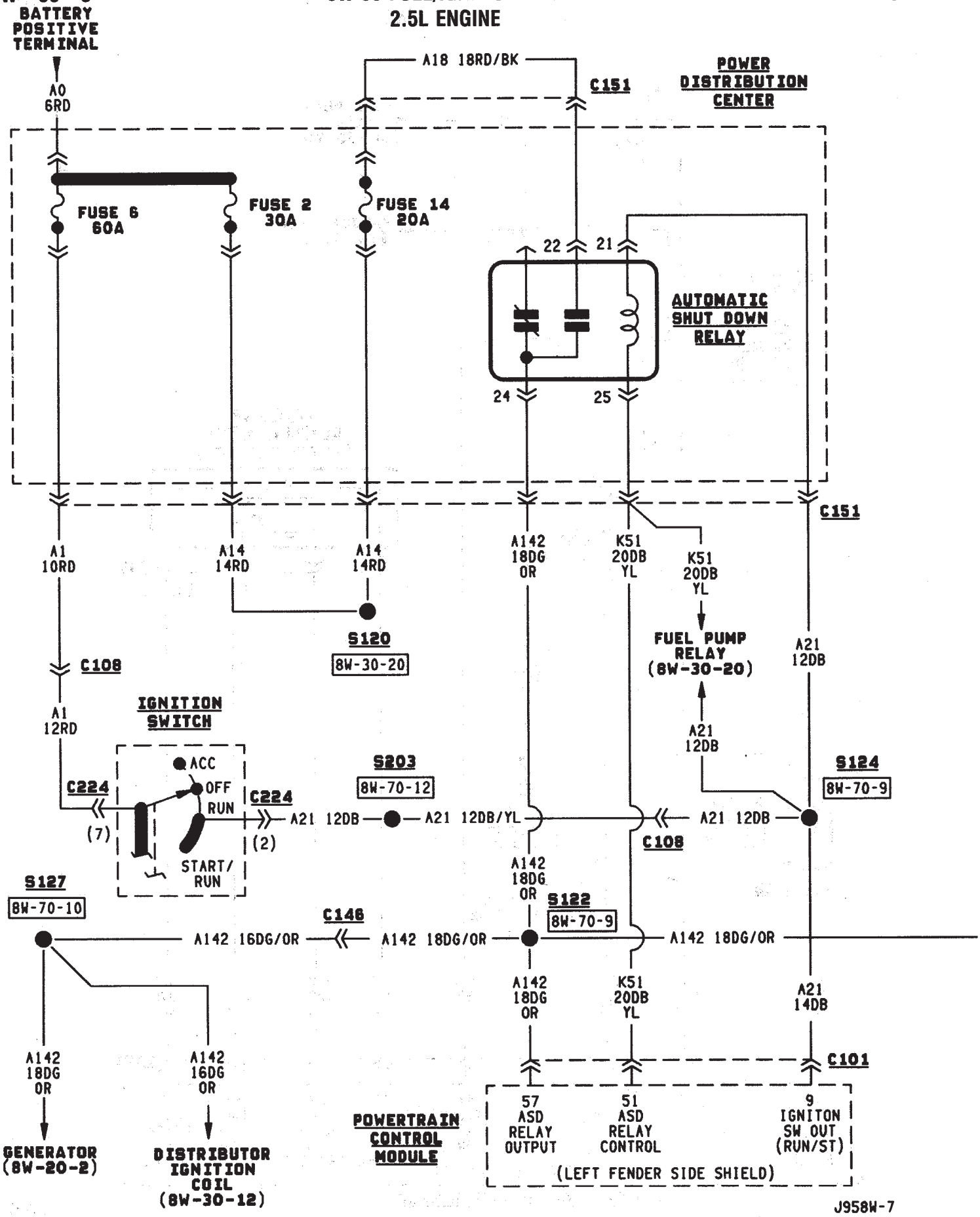
BATTERY POSITIVE TERMINAL
A0 6RD
A18 18RD/BK
C151
POWER DISTRIBUTION CENTER
FUSE 6 60A
FUSE 2 30A
FUSE 14 20A
22
21
AUTOMATIC SHUT DOWN RELAY
24
25
C151
A1 10RD
A14 14RD
A14 14RD
A142 18DG OR
K51 20DB YL
K51 20DB YL
S120
8W-30-20
FUEL PUMP RELAY (8W-30-20)
A21 12DB
C108
A1 12RD
IGNITION SWITCH
ACC
OFF
RUN
START/ RUN
C224
C224
(7)
(2)
S203
8W-70-12
A21 12DB
A21 12DB/YL
A21 12DB
S124
8W-70-9
C108
A21 12DB
A142 18DG OR
S122
8W-70-9
S127
8W-70-10
C146
A142 16DG/OR
A142 18DG/OR
A142 18DG/OR
A142 18DG OR
K51 20DB YL
A21 14DB
C101
A142 18DG OR
A142 16DG OR
57 ASD RELAY OUTPUT
51 ASD RELAY CONTROL
9 IGNITON SW OUT (RUN/ST)
(LEFT FENDER SIDE SHIELD)
POWERTRAIN CONTROL MODULE
GENERATOR (8W-20-2)
DISTRIBUTOR IGNITION COIL (8W-30-12)
J958W-7

2.5L ENGINE

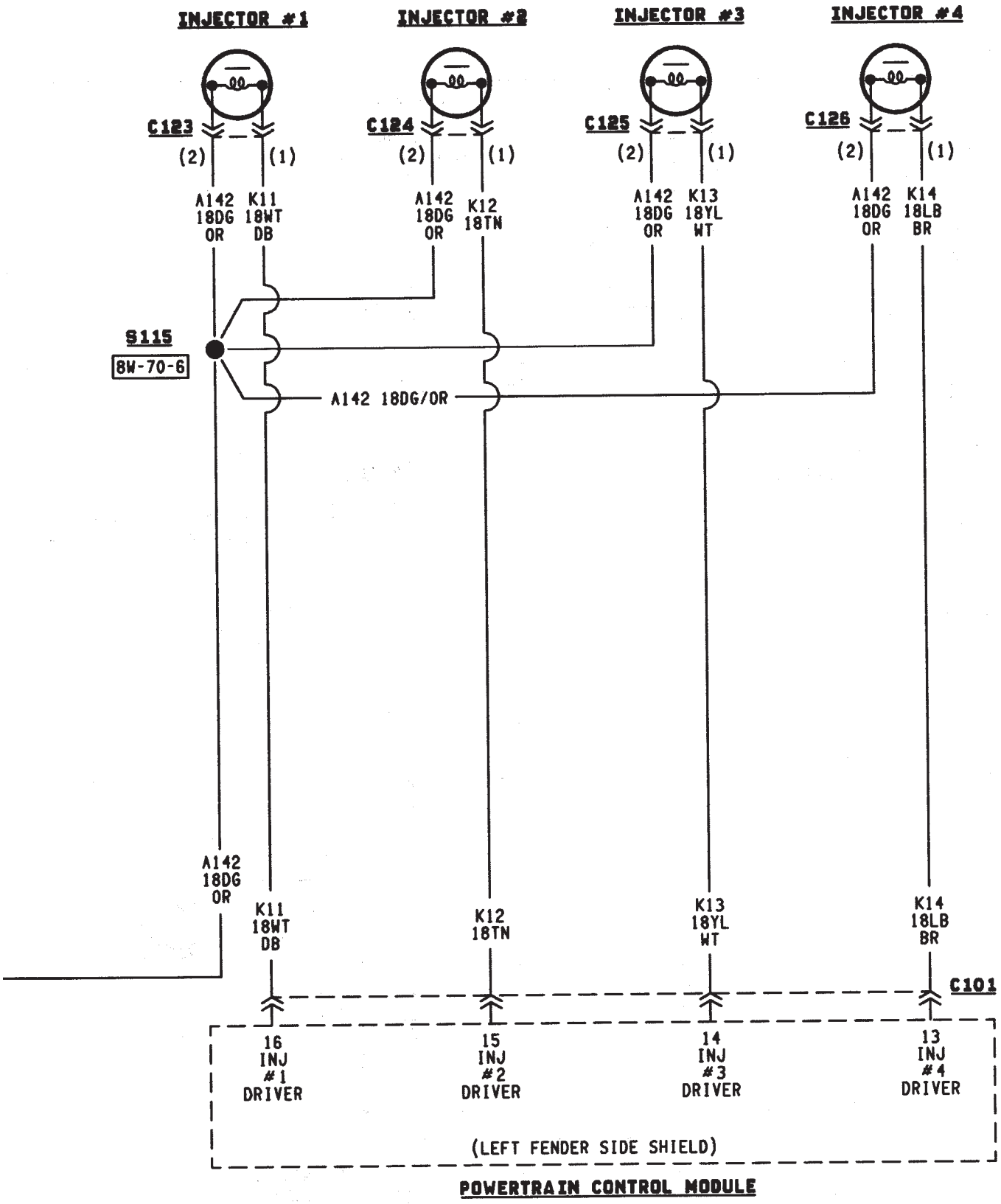

J958W-7

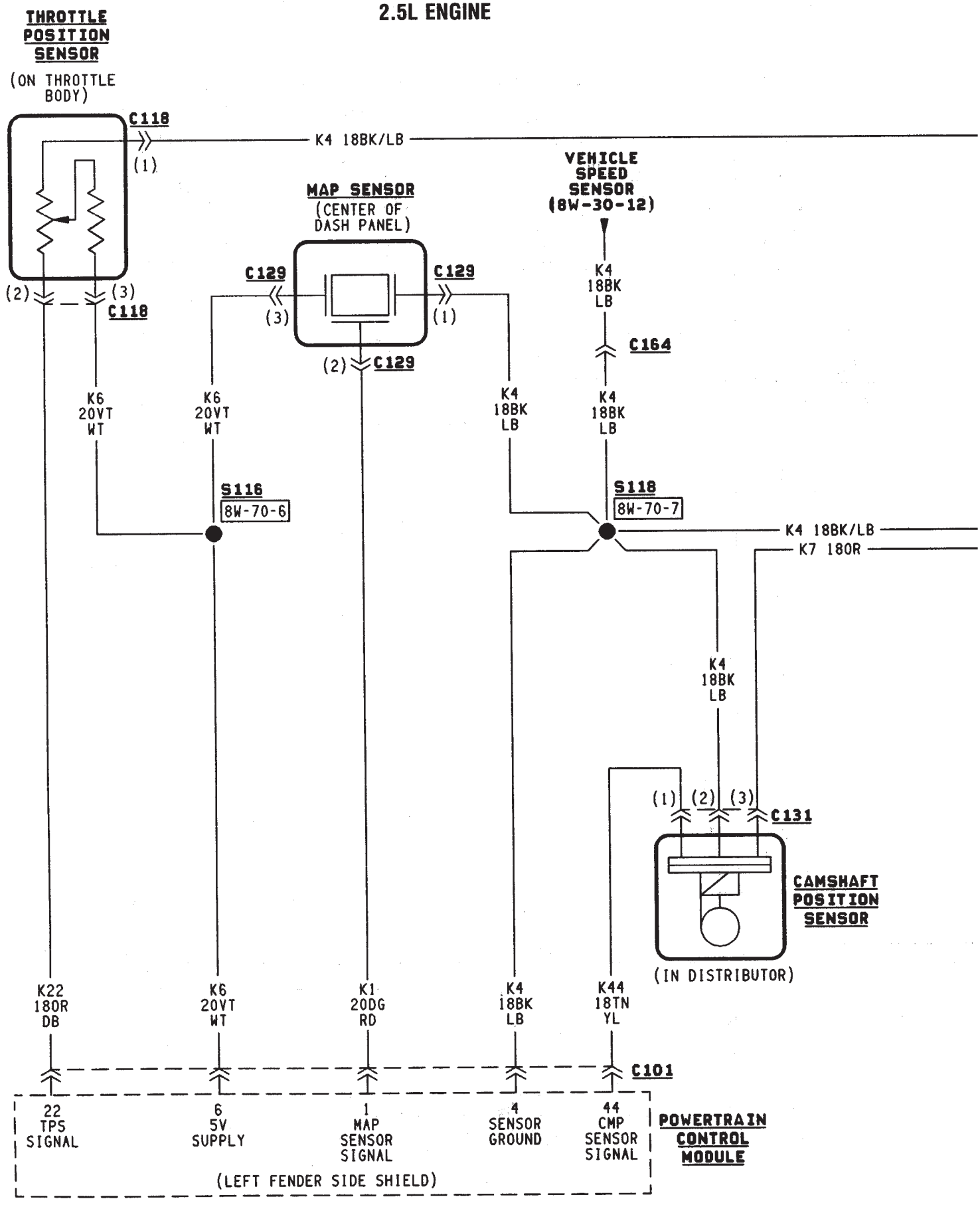
THROTTLE POSITION SENSOR
(ON THROTTLE BODY)
C118
(1)
K4 18BK/LB
(2)
(3)
C118
MAP SENSOR
(CENTER OF DASH PANEL)
C129
(3)
C129
(1)
(2)
C129
VEHICLE SPEED SENSOR (8W-30-12)
K4 18BK LB
C164
K4 18BK LB
K6 20VT WT
K6 20VT WT
K4 18BK LB
S116
8W-70-6
S118
8W-70-7
K4 18BK/LB
K7 180R
K4 18BK LB
(1) (2) (3)
C131
CAMSHAFT POSITION SENSOR
(IN DISTRIBUTOR)
K22 180R DB
K6 20VT WT
K1 20DG RD
K4 18BK LB
K44 18TN YL
C101
22 TPS SIGNAL
6 5V SUPPLY
1 MAP SENSOR SIGNAL
4 SENSOR GROUND
44 CMP SENSOR SIGNAL
POWERTRAIN CONTROL MODULE
(LEFT FENDER SIDE SHIELD)

J958W-7

2.5L ENGINE

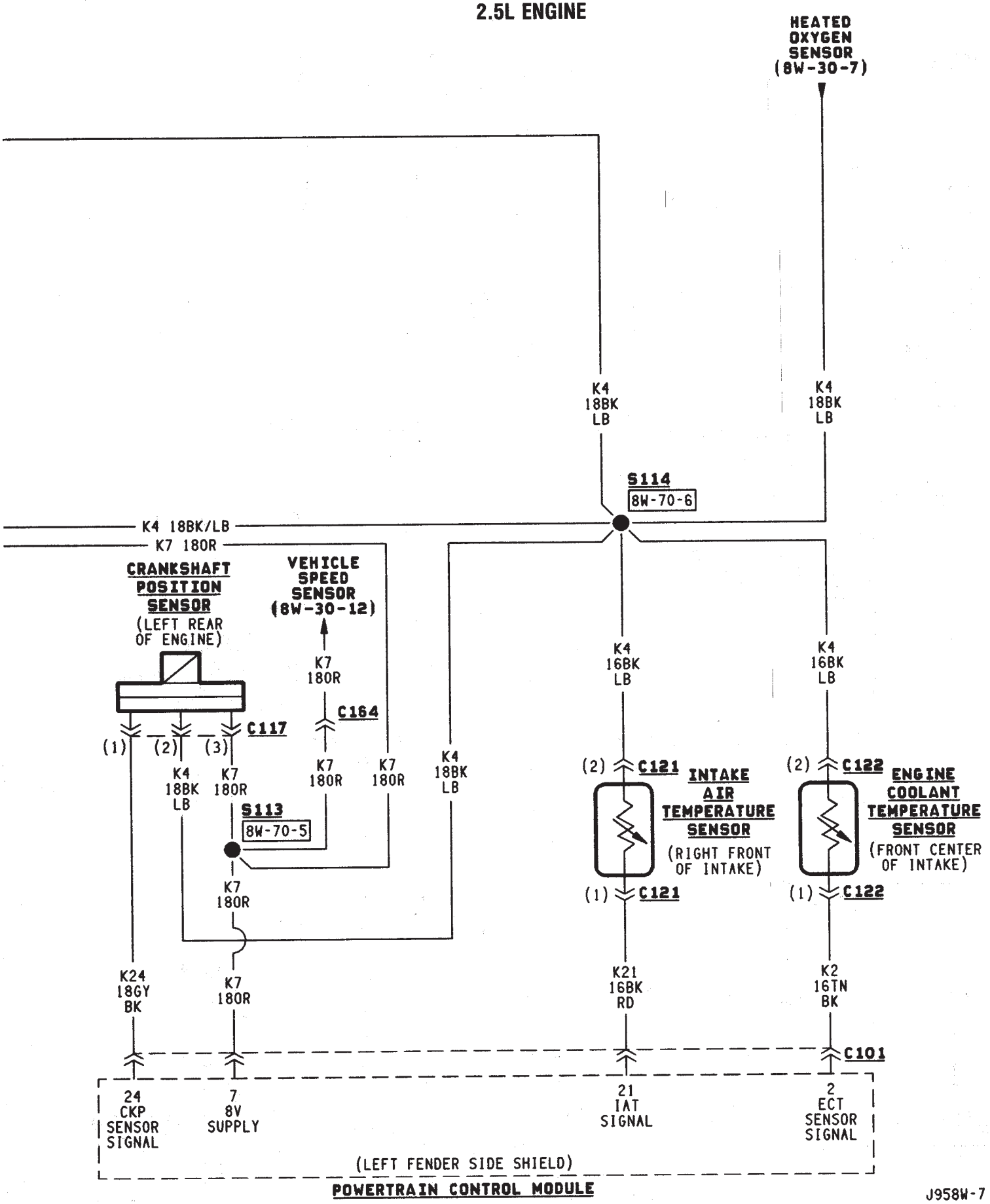

J958W-7

2.5L ENGINE

1995 Jeep Cherokee/Wrangler
Publication No. 81-370-5146
TSB 26-07-95 September, 1995

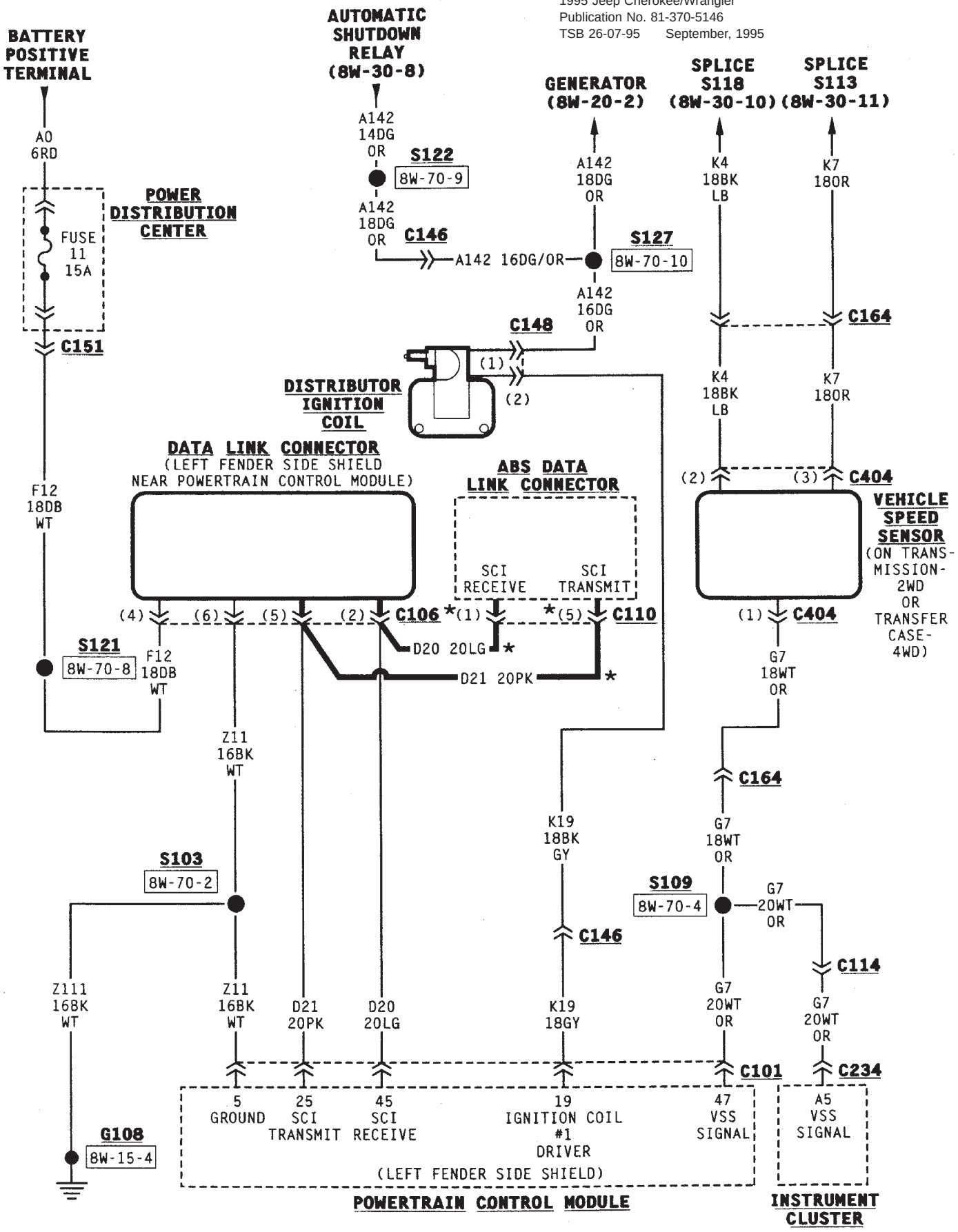

J958W-7

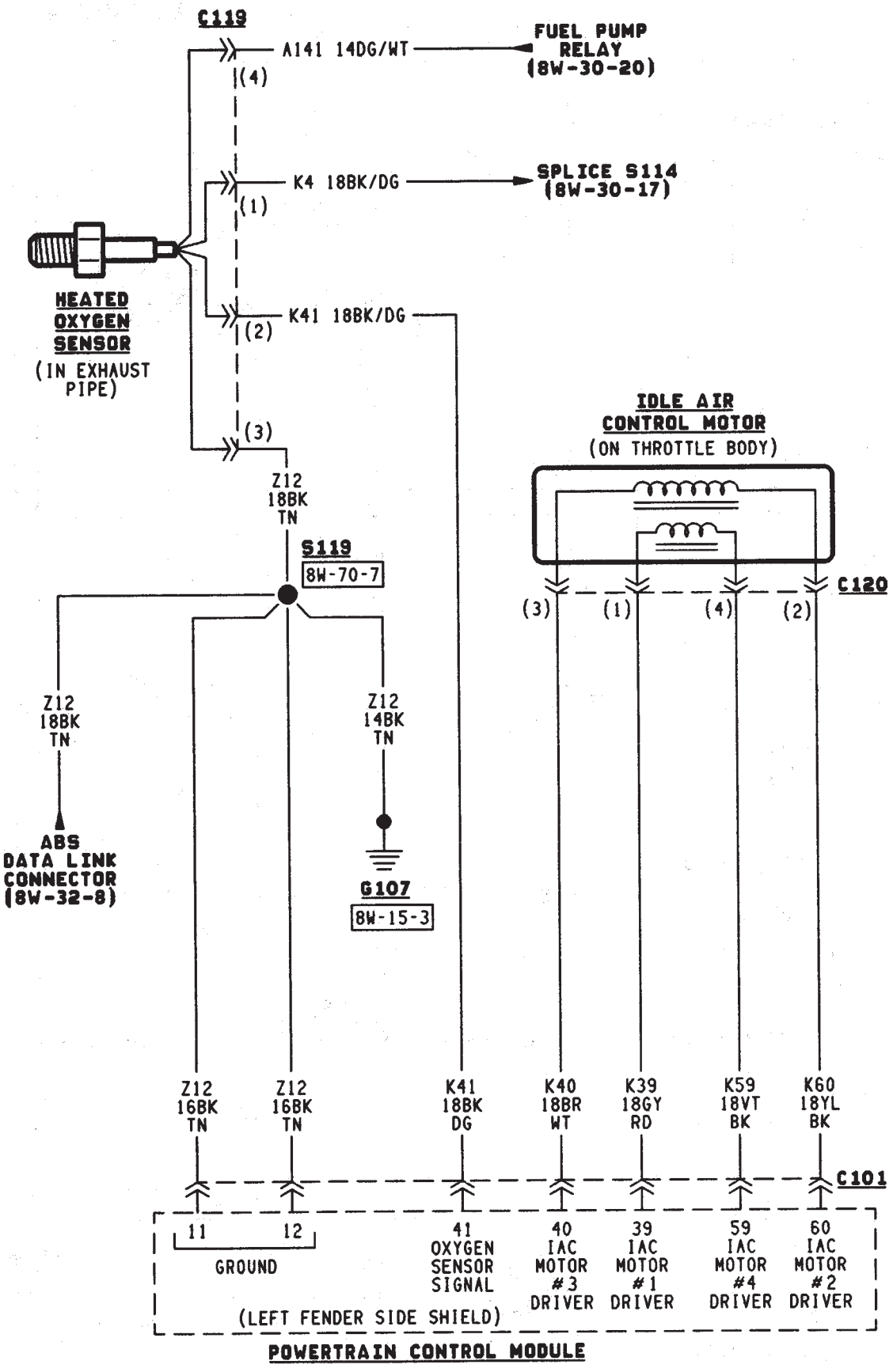
C119
A141 14DG/WT
FUEL PUMP RELAY (8W-30-20)
(4)
K4 18BK/DG
SPLICE S114 (8W-30-17)
(1)
HEATED OXYGEN SENSOR
(IN EXHAUST PIPE)
K41 18BK/DG
(2)
(3)
IDLE AIR CONTROL MOTOR
(ON THROTTLE BODY)
Z12 18BK TN
S119
8W-70-7
C120
(3) (1) (4) (2)
Z12 18BK TN
Z12 14BK TN
ABS DATA LINK CONNECTOR (8W-32-8)
G107
8W-15-3
Z12 16BK TN
Z12 16BK TN
K41 18BK DG
K40 18BR WT
K39 18GY RD
K59 18VT BK
K60 18YL BK
C101
11 12
GROUND
41 OXYGEN SENSOR SIGNAL
40 IAC MOTOR #3 DRIVER
39 IAC MOTOR #1 DRIVER
59 IAC MOTOR #4 DRIVER
60 IAC MOTOR #2 DRIVER
(LEFT FENDER SIDE SHIELD)
POWERTRAIN CONTROL MODULE

J958W-7

4.0L ENGINE

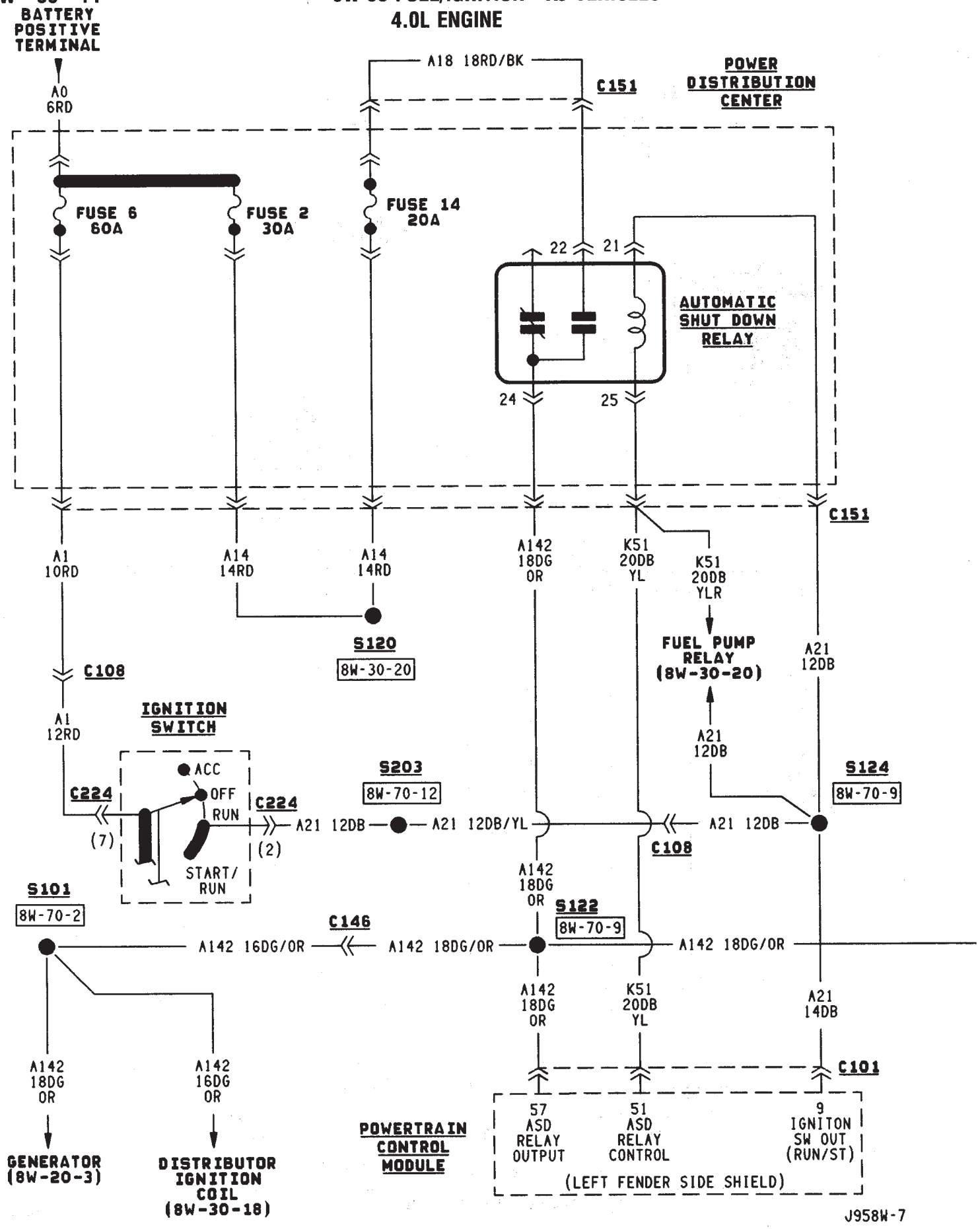

J958W-7

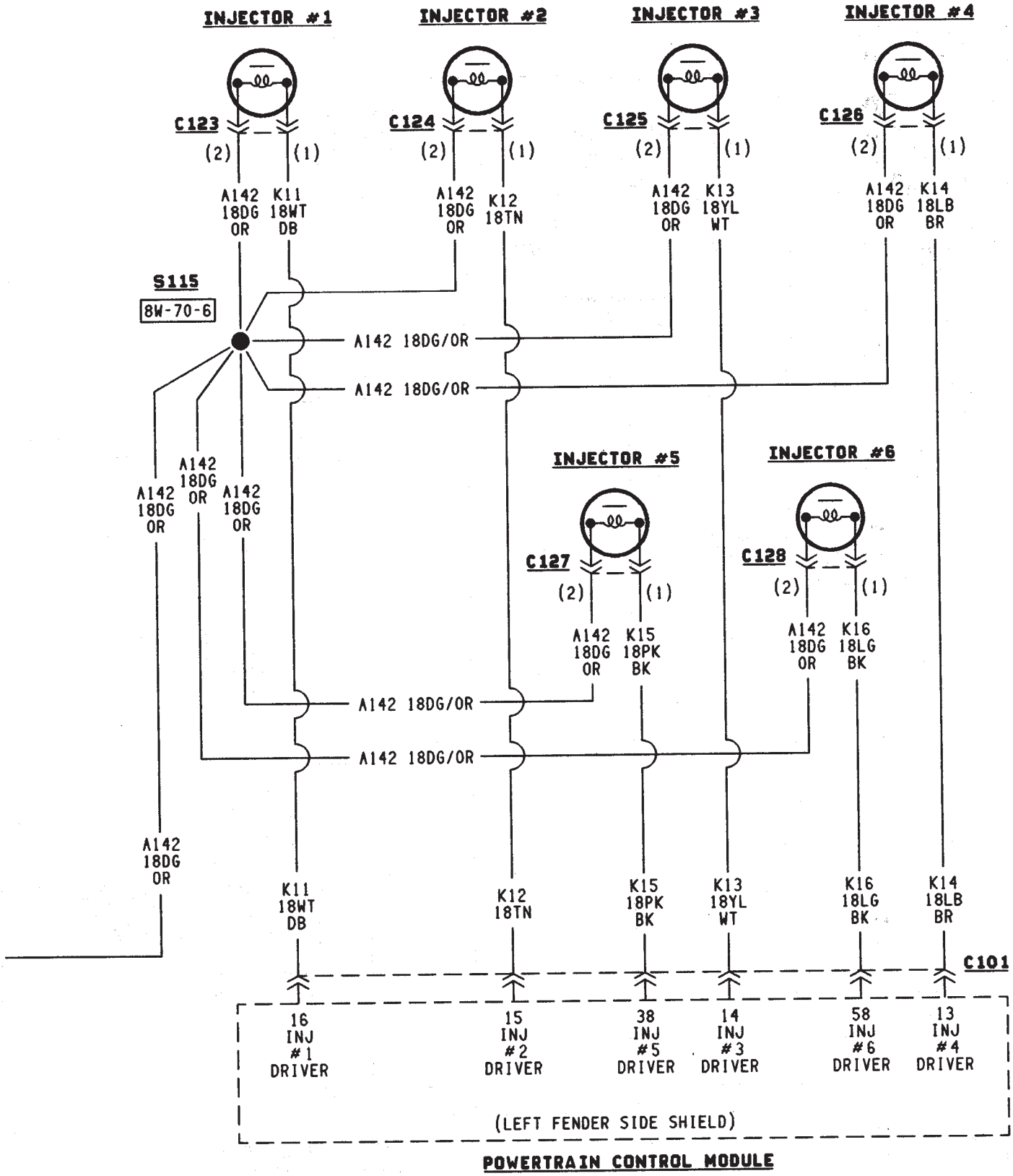
INJECTOR #1
INJECTOR #2
INJECTOR #3
INJECTOR #4
C123
C124
C125
C126
(2)
(1)
A142 18DG OR
K11 18WT DB
K12 18TN
K13 18YL WT
K14 18LB BR
S115
8W-70-6
A142 18DG/OR
INJECTOR #5
INJECTOR #6
C127
C128
K15 18PK BK
K16 18LG BK
K11 18WT DB
K12 18TN
K15 18PK BK
K13 18YL WT
K16 18LG BK
K14 18LB BR
C101
16 INJ #1 DRIVER
15 INJ #2 DRIVER
38 INJ #5 DRIVER
14 INJ #3 DRIVER
58 INJ #6 DRIVER
13 INJ #4 DRIVER
(LEFT FENDER SIDE SHIELD)
POWERTRAIN CONTROL MODULE

J958W-7

4.0L ENGINE

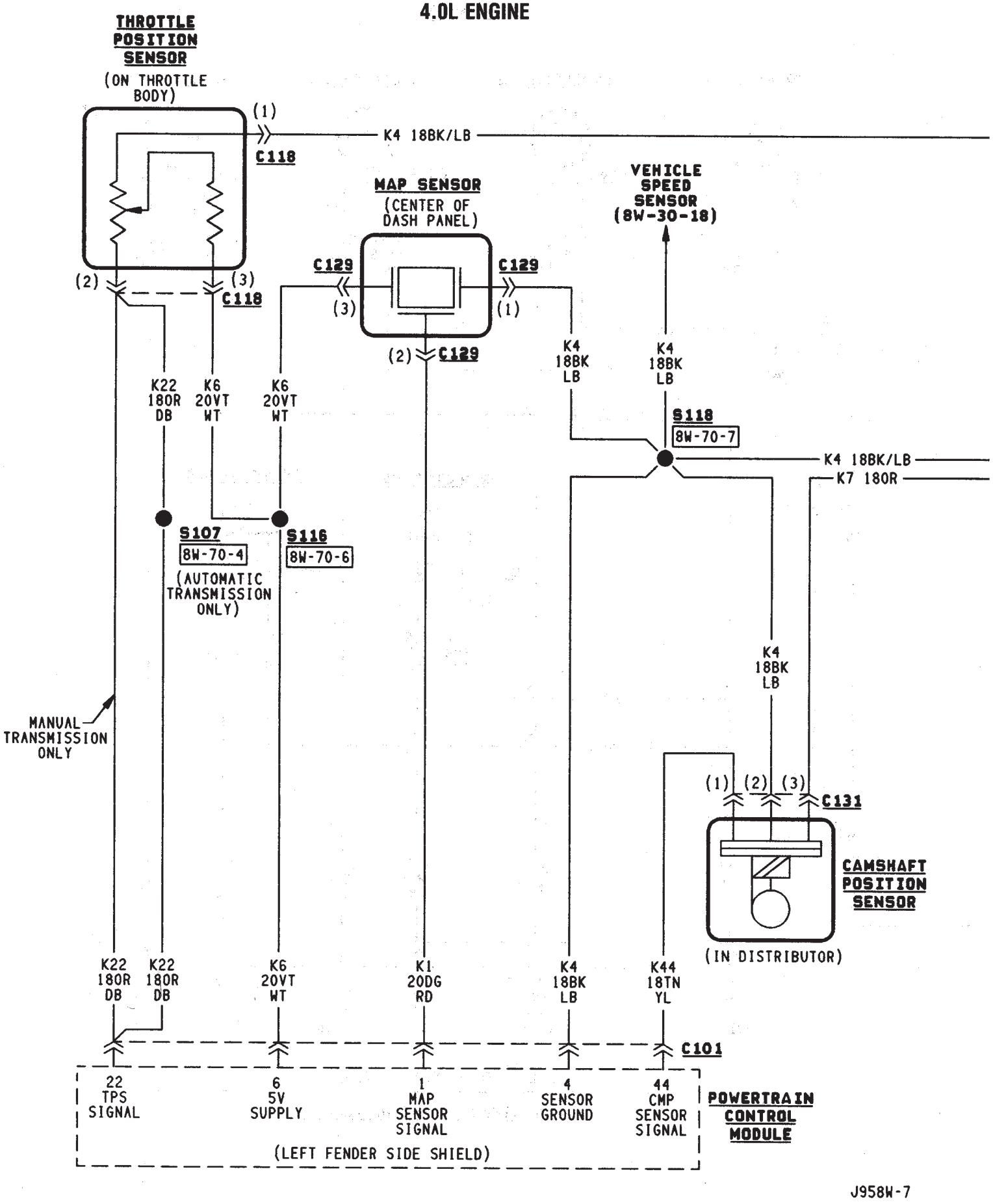

J958W-7

4.0L ENGINE

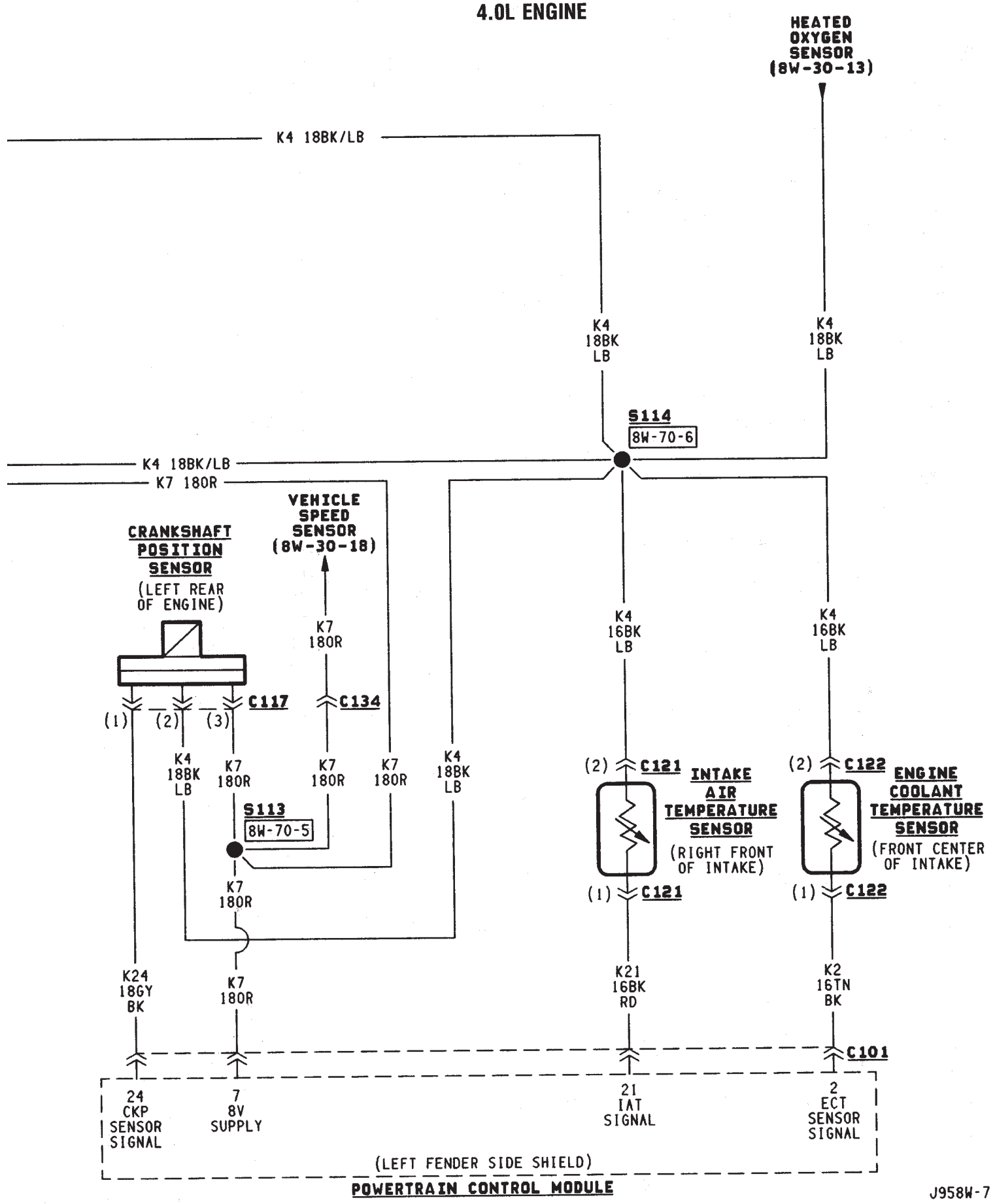

J958W-7

4.0L ENGINE

1995 Jeep Cherokee/Wrangler
Publication No. 81-370-5146
TSB 26-07-95 September, 1995

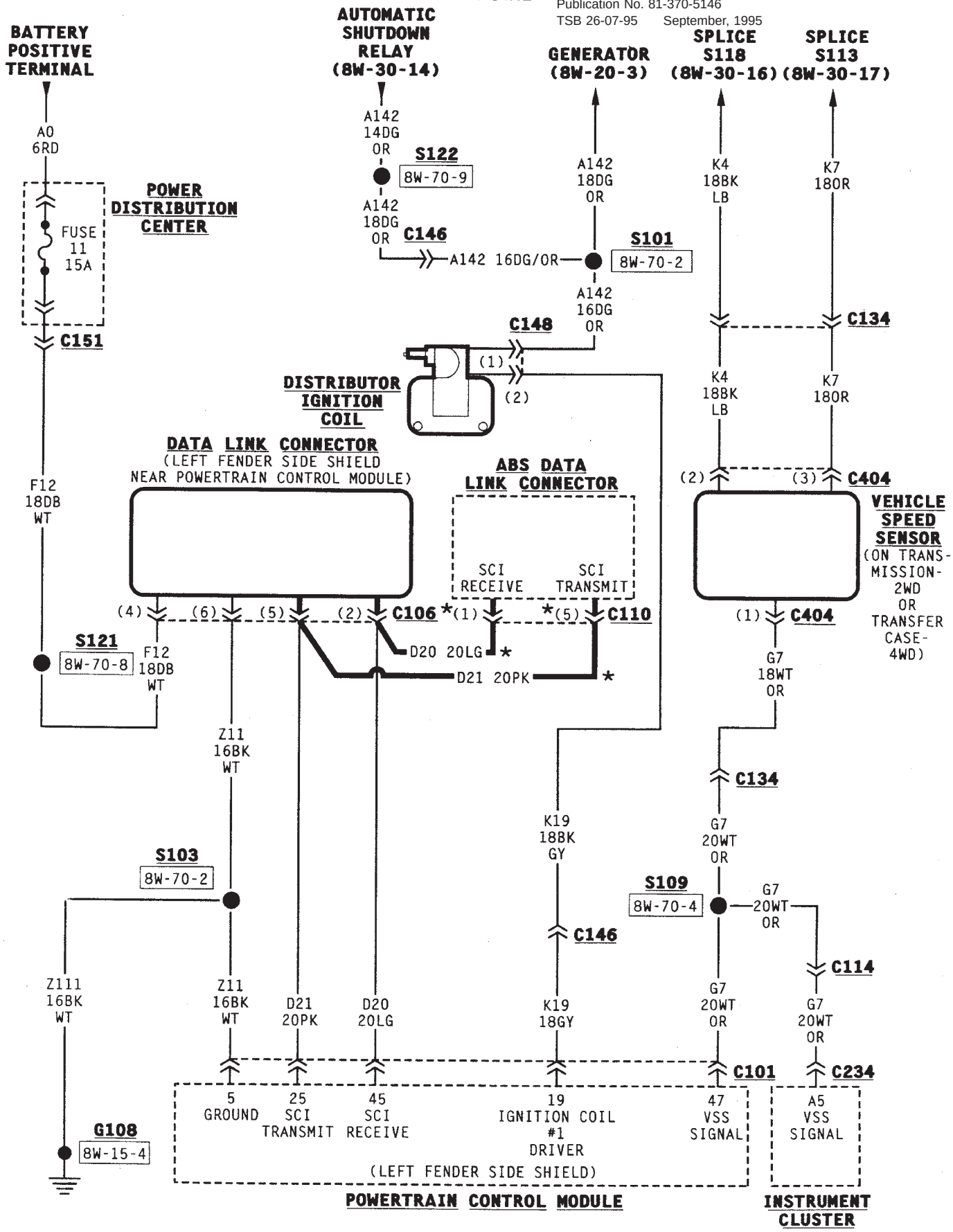

J958W-7

4.0L ENGINE - POLICE ONLY

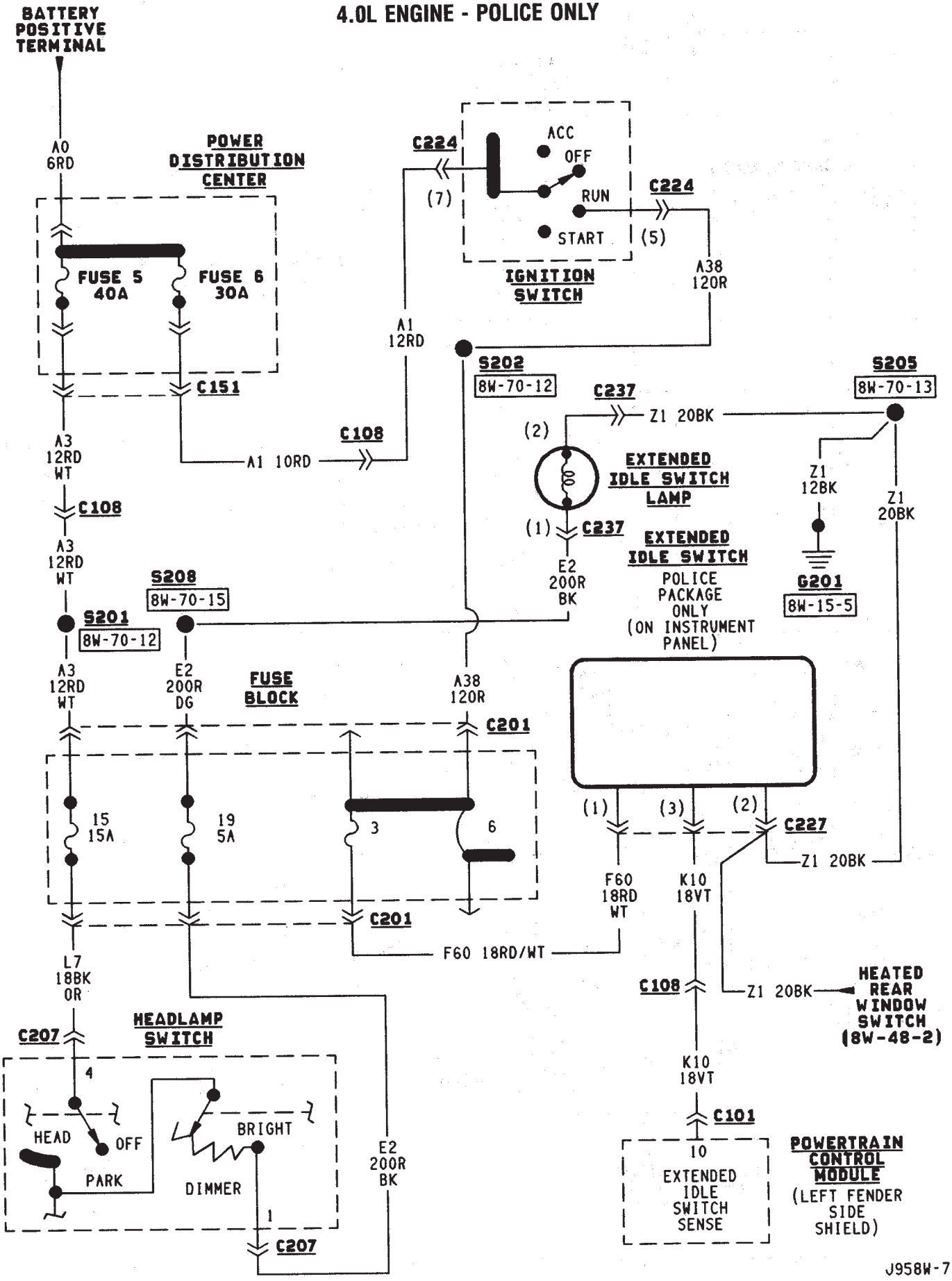

J958W-7

ALL ENGINES

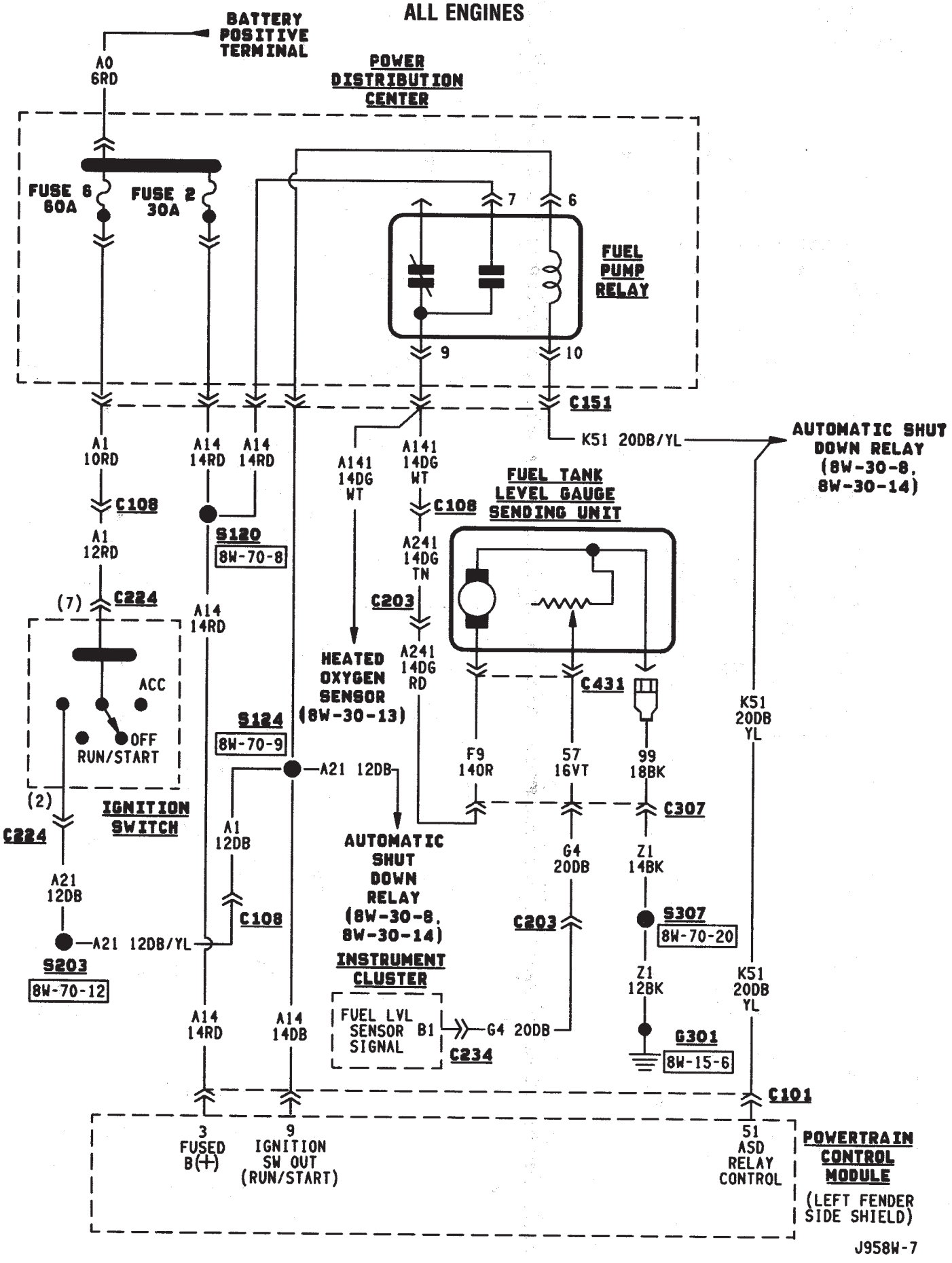
BATTERY POSITIVE TERMINAL
A0 6RD
POWER DISTRIBUTION CENTER
FUSE 6 60A
FUSE 2 30A
7
6
FUEL PUMP RELAY
9
10
C151
K51 20DB/YL
AUTOMATIC SHUT DOWN RELAY (8W-30-8, 8W-30-14)
A1 10RD
A14 14RD
A14 14RD
A141 14DG WT
A141 14DG WT
A141 14DG WT
C108
C108
FUEL TANK LEVEL GAUGE SENDING UNIT
A1 12RD
S120
8W-70-8
A241 14DG TN
(7)
C224
A14 14RD
C203
HEATED OXYGEN SENSOR (8W-30-13)
A241 14DG RD
ACC
OFF
RUN/START
S124
8W-70-9
A21 12DB
C431
K51 20DB YL
F9 140R
57 16VT
99 18BK
(2)
IGNITION SWITCH
C224
C307
A1 12DB
AUTOMATIC SHUT DOWN RELAY (8W-30-8, 8W-30-14)
G4 20DB
Z1 14BK
A21 12DB
C108
C203
S307
8W-70-20
A21 12DB/YL
S203
8W-70-12
INSTRUMENT CLUSTER
Z1 12BK
K51 20DB YL
A14 14RD
A14 14DB
FUEL LVL SENSOR SIGNAL
B1
G4 20DB
C234
G301
8W-15-6
C101
3 FUSED B(+)
9 IGNITION SW OUT (RUN/START)
51 ASD RELAY CONTROL
POWERTRAIN CONTROL MODULE
(LEFT FENDER SIDE SHIELD)
J958W-7

TRANSMISSION CONTROLS

UPSHIFT LAMP

On vehicles equipped with a manual transmission, the PCM grounds the up-shift lamp on circuit K54. Circuit K54 connects to cavity 54 of the PCM.

FOUR-WHEEL DRIVE (4WD) SWITCH

When the 4WD switch closes, circuit Z1 provides ground for the 4WD indicator lamp in the instrument cluster. Circuit F87 connects to the instrument cluster and supplies battery voltage to the 4WD indicator lamp. Circuit 107 connects the indicator lamp to the 4WD switch. Circuit 106 connects the lamp to the instrument cluster and circuit F87.

TRANSMISSION CONTROL MODULE—4.0L ENGINE ONLY

Vehicles equipped with the 4.0L engine have electronically controlled solenoids in the automatic transmission valve body.

The Transmission Control Module (TCM) receives inputs from the Throttle Position Sensor (TPS) on circuit K22 and the stop lamp switch on circuit K29. Circuit K4 connects to the TCM to provide ground for the TPS signal. The TCM receives the transmission output speed sensor signal on circuit T505. Circuit A14 from fuse 2 in the Power Distribution Center supplies battery voltage to the TCM. Circuit Z12 provides ground for the TCM.

The TCM powers the S1 solenoid on circuit T510, the S2 solenoid on circuit T509, and the S3 solenoid on circuit T508. Circuit Z12 provides ground for the S1, S2, and S3 solenoids.

TORQUE CONVERTER CLUTCH (TCC) SOLENOID AND RELAY—2.5L ENGINE ONLY

The TCC solenoid is only used on 2.5L engines with the three-speed automatic transmissions. The Powertrain Control Module (PCM) operates the TCC solenoid by energizing the TCC relay.

Circuit T17 from fuse 12 in the Power Distribution Center (PDC) supplies voltage to the coil and contact sides of the TCC relay. When the PCM provides a ground path on circuit K54 for the coil side of the relay, the relay contacts close.

When the relay contacts close, they connect circuit T17 with circuit T22. Circuit T22 supplies battery voltage to the case grounded TCC solenoid. Circuit K54 connects to PCM cavity 54.

HELPFUL INFORMATION

- In the RUN or START position, the ignition switch connects circuit A1 from fuse 6 in the PDC to circuit A21.

DIAGRAM INDEX

Component	Page
4-WD Indicator Lamp	8W-31-4
4-WD Indicator Switch	8W-31-4
Back-Up Lamp Switch	8W-31-3
Fuse 2 (PDC)	8W-31-4
Fuse 6 (PDC)	8W-31-2, 3
Fuse 11 (PDC)	8W-31-3
Fuse 12 (PDC)	8W-31-2
Ignition Switch	8W-31-2, 3
Powertrain Control Module	8W-31-2
Park/Neutral Position Switch	8W-31-3
TCC Relay	8W-31-2
TCC Solenoid	8W-31-2
Transmission Control Module	8W-31-2

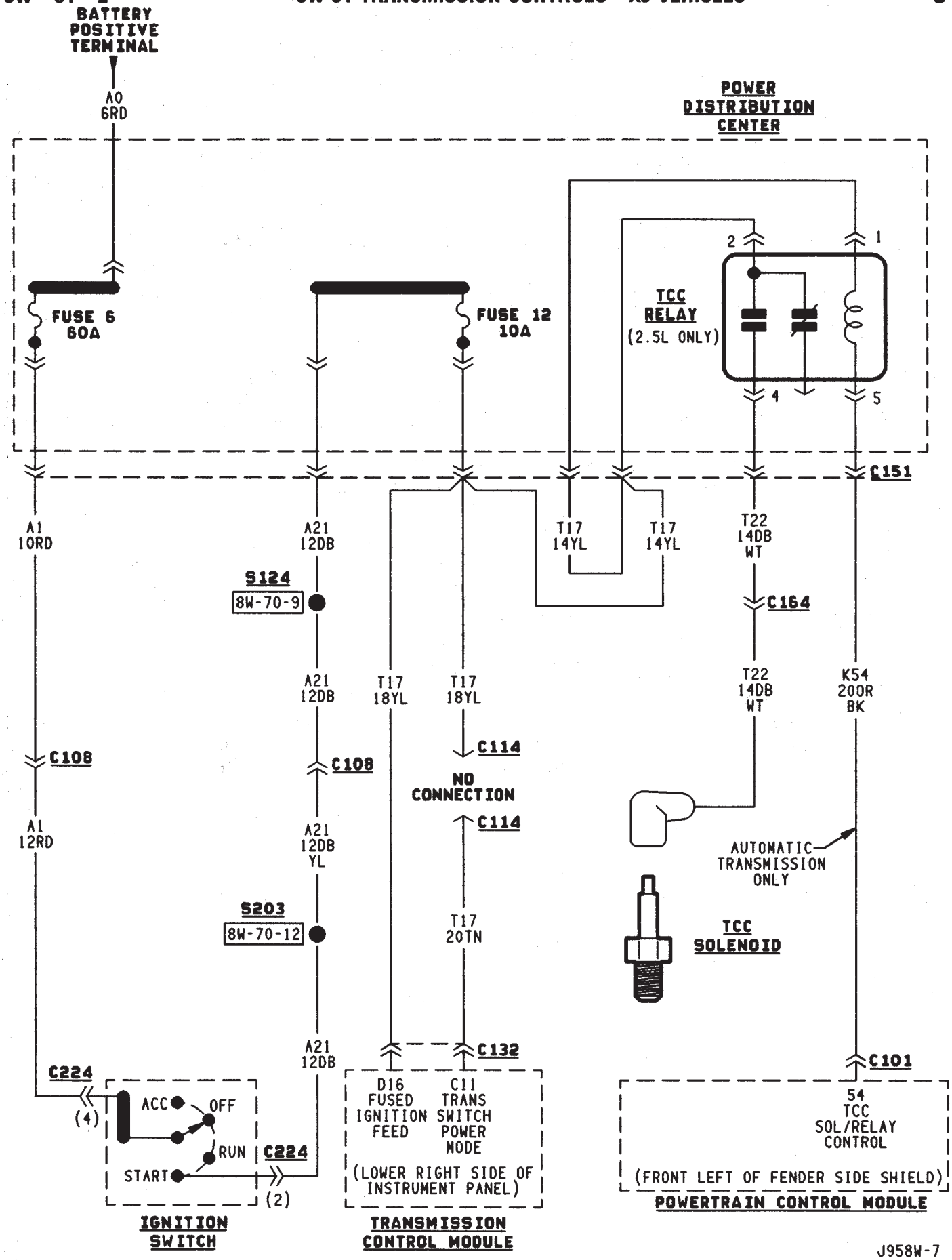
BATTERY POSITIVE TERMINAL
A0 6RD
POWER DISTRIBUTION CENTER
FUSE 6 60A
FUSE 12 10A
TCC RELAY (2.5L ONLY)
2
1
4
5
C151
A1 10RD
A21 12DB
T17 14YL
T17 14YL
T22 14DB WT
S124
8W-70-9
C164
A21 12DB
T17 18YL
T17 18YL
T22 14DB WT
K54 200R BK
C108
C108
C114
NO CONNECTION
A1 12RD
A21 12DB YL
C114
AUTOMATIC TRANSMISSION ONLY
S203
8W-70-12
T17 20TN
TCC SOLENOID
A21 12DB
C132
C101
C224
ACC
OFF
RUN
START
C224
(4)
(2)
D16 FUSED IGNITION FEED
C11 TRANS SWITCH POWER MODE
(LOWER RIGHT SIDE OF INSTRUMENT PANEL)
54 TCC SOL/RELAY CONTROL
(FRONT LEFT OF FENDER SIDE SHIELD)
IGNITION SWITCH
TRANSMISSION CONTROL MODULE
POWERTRAIN CONTROL MODULE
J958W-7

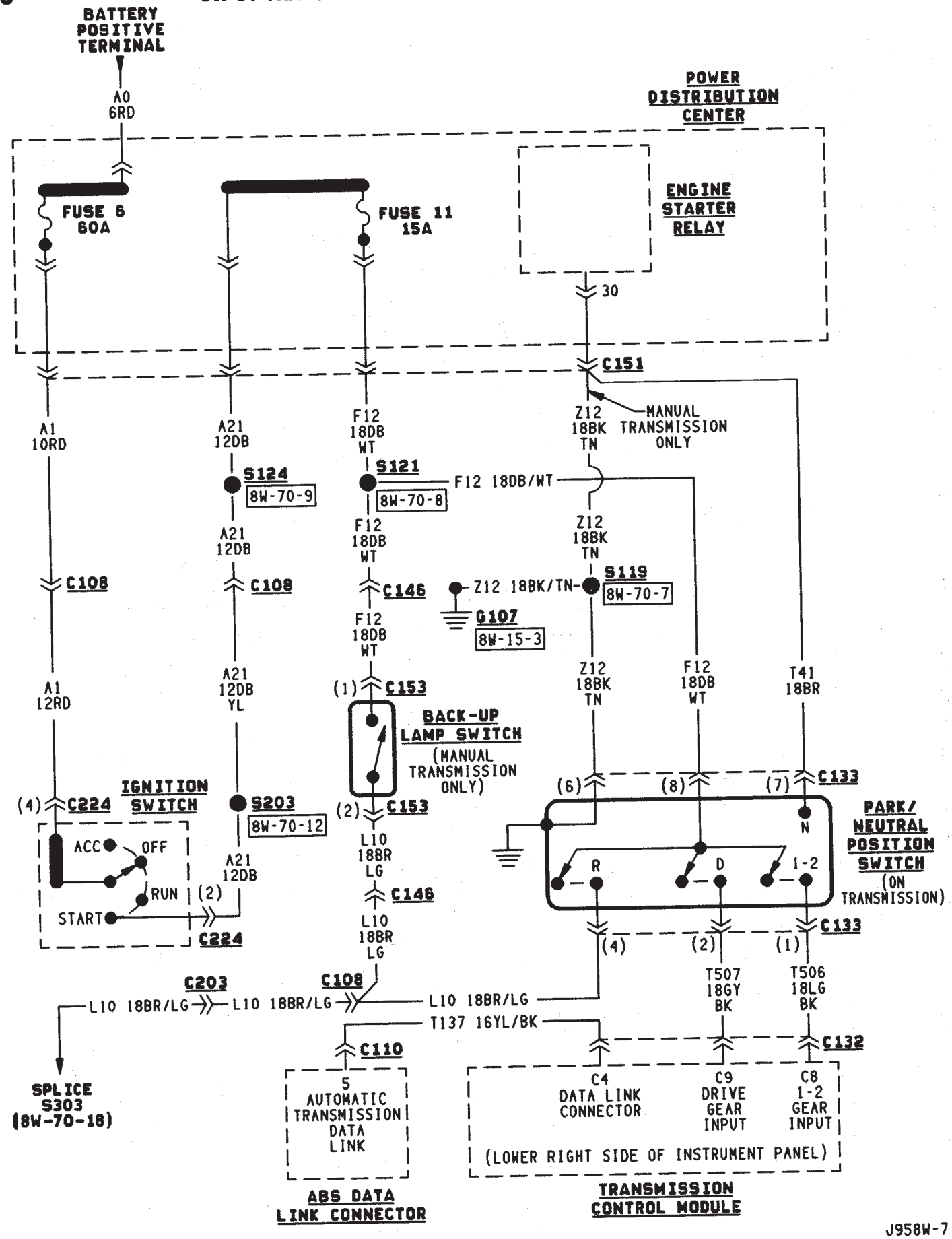
BATTERY POSITIVE TERMINAL
A0 6RD
POWER DISTRIBUTION CENTER
FUSE 6 60A
FUSE 11 15A
ENGINE STARTER RELAY
30
C151
A1 10RD
A21 12DB
F12 18DB WT
Z12 18BK TN
MANUAL TRANSMISSION ONLY
S124
8W-70-9
S121
8W-70-8
F12 18DB/WT
C108
C146
Z12 18BK/TN
S119
8W-70-7
G107
8W-15-3
A1 12RD
A21 12DB YL
(1) C153
BACK-UP LAMP SWITCH
(MANUAL TRANSMISSION ONLY)
T41 18BR
(6)
(8)
(7) C133
IGNITION SWITCH
(4) C224
S203
8W-70-12
(2) C153
ACC
OFF
RUN
START
(2)
L10 18BR LG
PARK/ NEUTRAL POSITION SWITCH
(ON TRANSMISSION)
N
R
D
1-2
(4)
(2)
(1)
C203
C108
L10 18BR/LG
T137 16YL/BK
T507 18GY BK
T506 18LG BK
C132
C110
5 AUTOMATIC TRANSMISSION DATA LINK
C4 DATA LINK CONNECTOR
C9 DRIVE GEAR INPUT
C8 1-2 GEAR INPUT
(LOWER RIGHT SIDE OF INSTRUMENT PANEL)
SPLICE S303 (8W-70-18)
ABS DATA LINK CONNECTOR
TRANSMISSION CONTROL MODULE
J958W-7

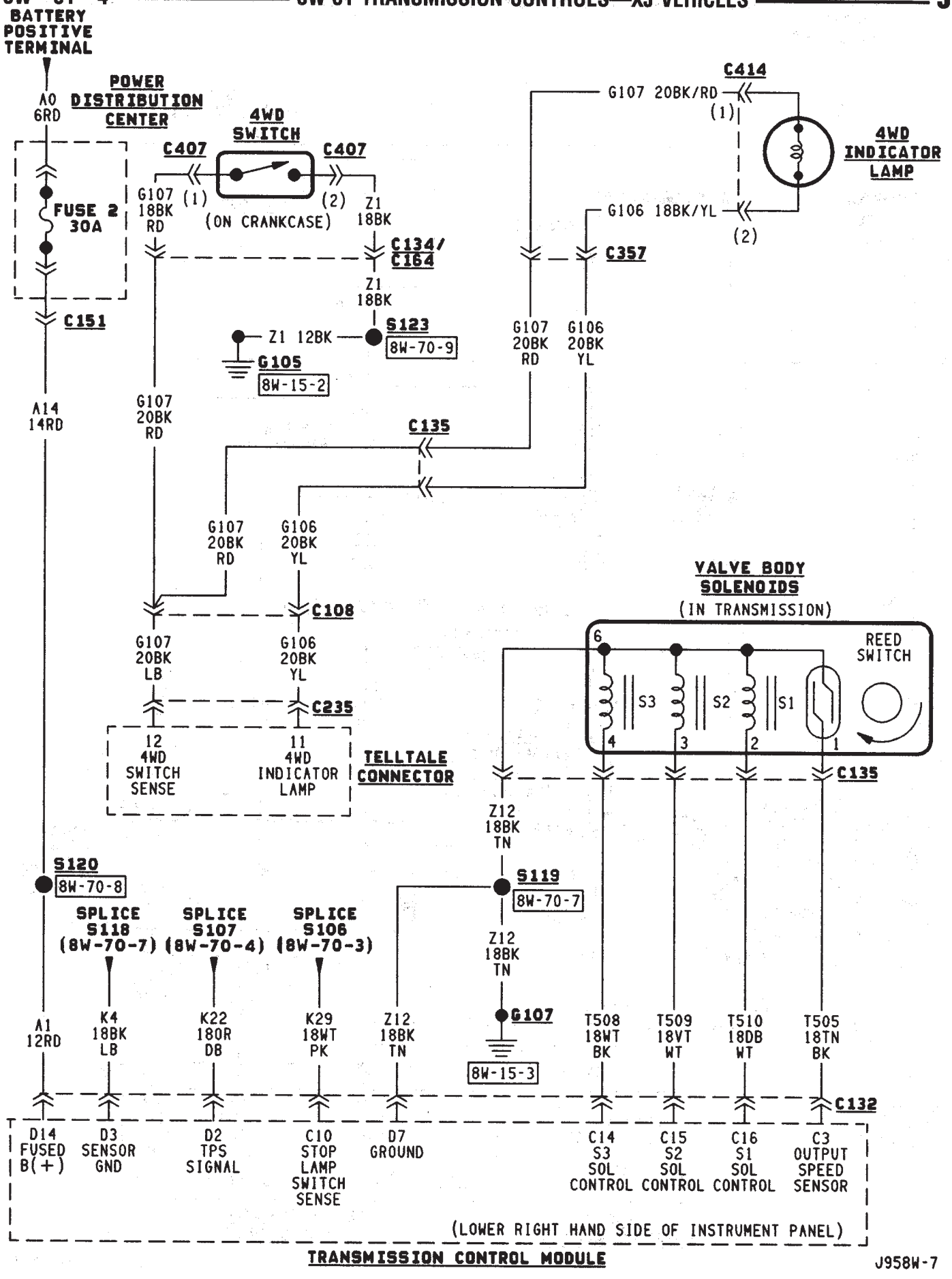
BATTERY POSITIVE TERMINAL
A0 6RD
POWER DISTRIBUTION CENTER
FUSE 2 30A
C151
A14 14RD
A1 12RD
4WD SWITCH
C407
C407
G107 18BK RD
(1)
(2)
(ON CRANKCASE)
Z1 18BK
C134/ C164
Z1 18BK
S123
8W-70-9
Z1 12BK
G105
8W-15-2
G107 20BK RD
C135
G107 20BK RD
G106 20BK YL
C108
G107 20BK LB
G106 20BK YL
C235
12 4WD SWITCH SENSE
11 4WD INDICATOR LAMP
TELLTALE CONNECTOR
C414
G107 20BK/RD
(1)
4WD INDICATOR LAMP
G106 18BK/YL
(2)
C357
G107 20BK RD
G106 20BK YL
VALVE BODY SOLENOIDS
(IN TRANSMISSION)
6
REED SWITCH
S3
S2
S1
4
3
2
1
C135
Z12 18BK TN
S119
8W-70-7
Z12 18BK TN
G107
8W-15-3
S120
8W-70-8
SPLICE S118 (8W-70-7)
SPLICE S107 (8W-70-4)
SPLICE S106 (8W-70-3)
K4 18BK LB
K22 18OR DB
K29 18WT PK
Z12 18BK TN
T508 18WT BK
T509 18VT WT
T510 18DB WT
T505 18TN BK
C132
D14 FUSED B(+)
D3 SENSOR GND
D2 TPS SIGNAL
C10 STOP LAMP SWITCH SENSE
D7 GROUND
C14 S3 SOL CONTROL
C15 S2 SOL CONTROL
C16 S1 SOL CONTROL
C3 OUTPUT SPEED SENSOR
(LOWER RIGHT HAND SIDE OF INSTRUMENT PANEL)
TRANSMISSION CONTROL MODULE
J958W-7

ANTI-LOCK BRAKES

INDEX

	page		page
ABS Power Relay	1	Diagram Index	3
ABS Pump Motor Relay	1	General Information	1
ABS Warning Lamp	2	Hydraulic Control Unit	2
Acceleration Switch	1	Pump Motor Speed Sensor	2
Brake Switch Input	2	Wheel Speed Sensors	1
Data Link Connector	2		

GENERAL INFORMATION

Three fuses supply power for the Anti-Lock Brake System (ABS); fuses 8 and 10 in the Power Distribution Center (PDC) and fuse 7 in the fuse block. Fuses 8 and 10 in the PDC are connected directly to battery voltage and are HOT all times. Fuse 7 in the fuse block is HOT when the ignition switch is the RUN Position.

In the RUN position, the ignition switch connects circuit A1 from fuse 6 in the PDC with circuit A38. Circuit A38 connects to a bus bar in the fuse block. The bus bar feeds circuit B236 through fuse 7. Fuse 7 is a 2 amp fuse.

Circuit B236 connects to the coil side of the ABS power relay and cavity 53 of the ABS control module.

Circuit Z1 provides ground for the ABS control module. Circuit Z1 connects to cavities 1 and 19 of the ABS control module.

Refer to group 5, Brakes for operational descriptions of ABS system components.

WHEEL SPEED SENSORS

The all wheel anti-lock system uses four wheel speed sensors; one for each wheel. Each sensor converts wheel speed into an electrical signal that it transmits to the ABS control module. A pair of twisted wires connect to each sensor to provide signals to the ABS control module.

Circuits B6 and B7 provide signals to ABS control module from right front wheel speed sensor. Circuit B6 which provides the LOW signal connects to cavity 29 of the ABS control module. Circuit B7 connects to cavity 47 of the module and provides the HIGH signal.

Circuits B8 and B9 provide signals to ABS control module from left front wheel speed sensor. Circuit B8, which provides the LOW signal, connects to cavity 30 of the ABS control module. Circuit B9 connects to cavity 48 of the module and provides the HIGH signal.

Circuits B1 and B2 provide signals to ABS control module from right rear wheel speed sensor. Circuit B1 which provides the LOW signal connects to cavity 45 of the ABS control module. Circuit B2 connects to cavity 27 of the module and provides the HIGH signal.

Circuits B4 and B3 provide signals to ABS control module from left rear wheel speed sensor. Circuit B3, which provides the LOW signal, connects to cavity 28 of the ABS control module. Circuit B4 connects to cavity 46 of the module and provides the HIGH signal.

ACCELERATION SWITCH

During four-wheel drive operation, the acceleration (G) switch provides deceleration data to the ABS control module. Refer to Group 5, Brakes for additional information.

Circuits B515, B516, and B517 connect the acceleration sensor to the ABS control module. Circuits B515 and B516 provide switch states while circuit B517 provides ground. At the ABS control module circuit B515 connects to cavity 25, circuit B516 connects to cavity 43 and circuit B517 connects to cavity 26.

ABS POWER RELAY

The ABS power relay is located in the power distribution center (PDC). When the ABS module grounds the ABS power relay on circuit B207, the relay switches to connect circuit A20 from PDC fuse 10 to circuit B235. Circuit B236 from fuse 7 in the fuse block splices to feed the coil side of the ABS power relay. Circuit B207 connects to cavity 34 of the ABS control module.

Circuit B235 is double crimped at the ABS power relay. One branch of circuit B235 supplies power to the coil side of the ABS pump motor relay. The other branch of circuit B235 splices to cavities 3 and 33 of the ABS control module and to the hydraulic control unit.

ABS PUMP MOTOR RELAY

The ABS pump motor relay in the power distribution center (PDC) supplies voltage to the ABS pump motor. When the ABS power relay energizes, circuit B235 supplies battery voltage to the coil side of the

ABS pump motor relay. The ABS control module provides ground for the relay on circuit B116. Circuit B116 connects to cavity 15 of the ABS control module.

When the ABS pump motor energizes, it connects circuit A10 from PDC fuse 8 to circuit B233. Circuit B233 supplies battery voltage to the pump motor. Circuit Z12 provides ground for the pump motor.

PUMP MOTOR SPEED SENSOR

The input from the pump motor speed sensor tells the ABS control module that the pump is operating. Circuits B219 and B220 from the control module connect to the speed sensor.

BRAKE SWITCH INPUT

Circuit L50 from the stop lamp provides the brake switch input to the ABS control module. When the brake pedal is depressed, the stop lamp switch closes to supply battery voltage from circuit L9 to circuit L50. Circuit L50 connects to cavity 32 of the ABS control module. Circuit L9 originates at fuse 4 in the Power Distribution Center (PDC).

HYDRAULIC CONTROL UNIT

When the ABS power relay energizes, two branches of circuit B235 splice to supply voltage to the isolation and dump solenoids in the hydraulic control unit. The hydraulic control unit contains three separate isolation solenoids and three separate dump solenoids. The ABS control module activates the decay and isolation solenoids by providing separate ground paths for each.

The ABS module provides a ground path for the rear isolation solenoid on circuit B251. Circuit B251 connects to cavity 54 of the ABS control module.

For the right front isolation solenoid, the ABS module provides a ground path on circuit B249. Circuit B249 connects to cavity 38 of the ABS control module.

On circuit B245, the ABS module provides ground for the left front isolation solenoid. Circuit B245 connects to cavity 20 of the ABS control module.

The ABS module provides a ground path for the rear decay solenoid on circuit B254. Circuit B254 connects to cavity 36 of the ABS control module.

For the right front decay solenoid, the ABS module provides a ground path on circuit B248. Circuit B248 connects to cavity 21 of the ABS control module.

On circuit B243, the ABS module provides ground for the left decay solenoid. Circuit B243 connects to cavity 2 of the ABS control module.

ABS WARNING LAMP

Circuit F87 provides power for the ABS warning lamp at the instrument cluster. Ground for the ABS warning lamp is provided by either the ABS control module or by the ABS power relay when the relay is not energized. The ABS control module illuminates the lamp by providing ground on circuit B205.

Circuit B205 splices to connect to circuit B235 through a diode. When the ABS power relay is not energized, it connects circuit B235 to circuit Z12. The ground path for the warning lamp is through the diode to circuit B235, through the ABS power relay to ground on circuit Z12.

The diode between circuit B205 and B235 prevents voltage from flowing to the ABS control module when the ABS power relay switches to supply power on circuit B235.

DATA LINK CONNECTOR

Circuit D1 from cavity 23 of the ABS control module receives data from the DRB scan tool through the data link connector. The ABS control module transmits data to the scan tool through the connector on circuit D2. Circuit D2 originates at cavity 42 of the ABS control module.

Through the data link connector, circuit Z12 provides ground for the DRB scan tool.

Circuit A4 from fuse 10 in the Power Distribution Center (PDC) supplies power to fuse 5 in the PDC. Fuse 5 powers circuit F39 which supplies battery voltage to the scan tool through the diagnostic connector.

HELPFUL INFORMATION

- Check fuses 10 and 5 in the PDC.
- If the vehicle is equipped with an automatic transmission, circuits D1 and D2 are double crimped at the data link connector and connect to the Powertrain Control Module (PCM).

DIAGRAM INDEX

Component	Page
ABS Control Module	8W-32-4 thru 8
ABS Hydraulic Unit	8W-32-6
ABS Power Relay	8W-32-4
ABS Pump Motor	8W-32-5
ABS Pump Motor Relay	8W-32-4
Data Link Connector	8W-32-8
Diode	8W-32-6
Fuse 6 (PDC)	8W-32-5
Fuse 7 (Fuse Block)	8W-32-5
Fuse 7 (PDC)	8W-32-8
Fuse 8 (PDC)	8W-32-5
Fuse 10 (PDC)	8W-32-4
Fuse 13 (PDC)	8W-32-8
G-Sensor	8W-32-8
Ignition Switch	8W-32-5
Powertrain Control Module	8W-32-8
Telltale Connector (Instrument Cluster)	8W-32-6
Transmission Control Module	8W-32-8
Wheel Speed Sensors	8W-32-7

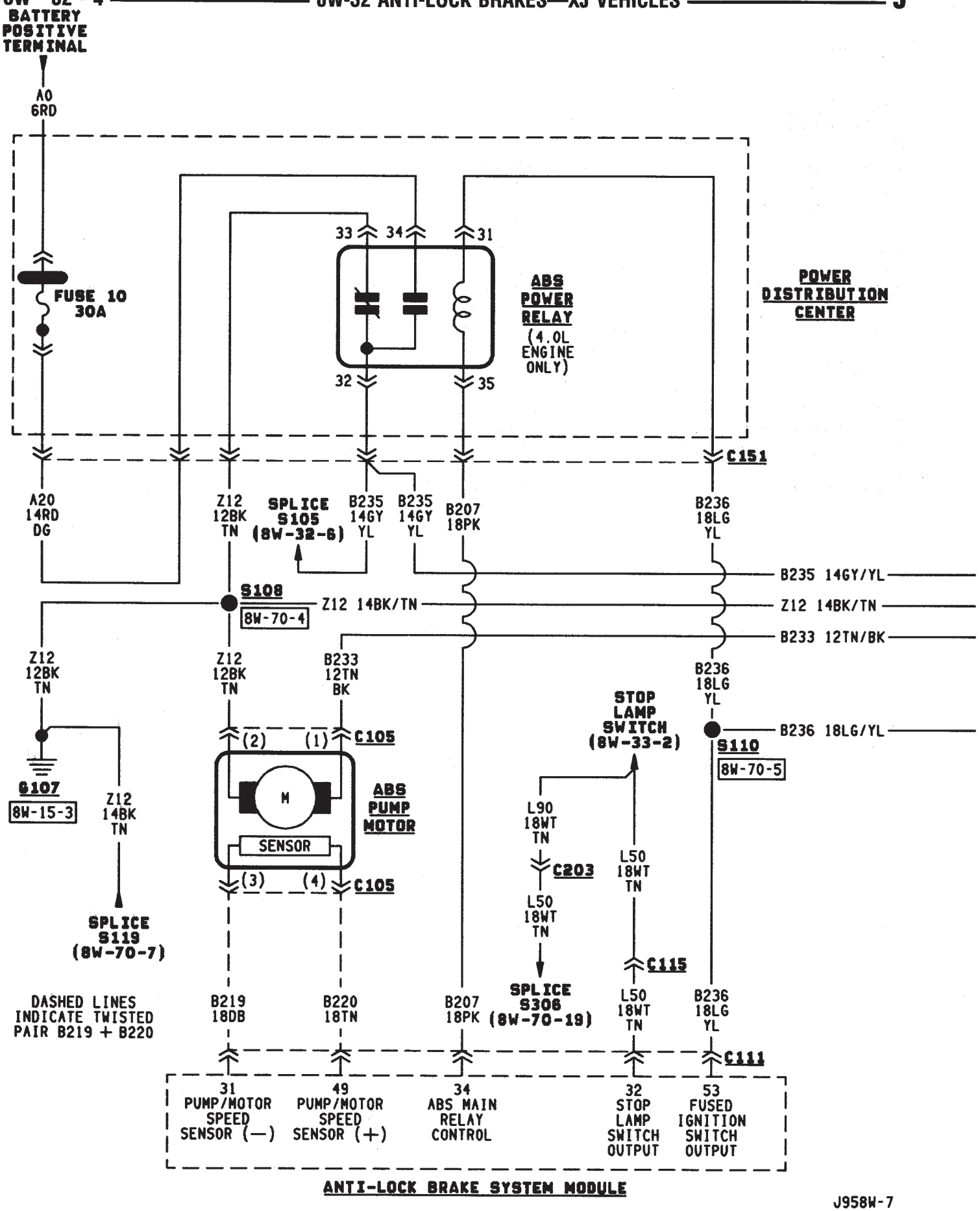
BATTERY POSITIVE TERMINAL
A0 6RD
FUSE 10 30A
33
34
31
32
35
ABS POWER RELAY (4.0L ENGINE ONLY)
POWER DISTRIBUTION CENTER
C151
A20 14RD DG
Z12 12BK TN
SPLICE S105 (8W-32-6)
B235 14GY YL
B235 14GY YL
B207 18PK
B236 18LG YL
B235 14GY/YL
S108
8W-70-4
Z12 14BK/TN
Z12 14BK/TN
B233 12TN/BK
Z12 12BK TN
Z12 12BK TN
B233 12TN BK
B236 18LG YL
B236 18LG/YL
S110
8W-70-5
STOP LAMP SWITCH (8W-33-2)
(2)
(1)
C105
G107
8W-15-3
Z12 14BK TN
M
SENSOR
ABS PUMP MOTOR
L90 18WT TN
C203
L50 18WT TN
L50 18WT TN
(3)
(4)
C105
SPLICE S119 (8W-70-7)
C115
DASHED LINES INDICATE TWISTED PAIR B219 + B220
B219 18DB
B220 18TN
B207 18PK
SPLICE S306 (8W-70-19)
L50 18WT TN
B236 18LG YL
C111
31 PUMP/MOTOR SPEED SENSOR (—)
49 PUMP/MOTOR SPEED SENSOR (+)
34 ABS MAIN RELAY CONTROL
32 STOP LAMP SWITCH OUTPUT
53 FUSED IGNITION SWITCH OUTPUT
ANTI-LOCK BRAKE SYSTEM MODULE

J958W-7

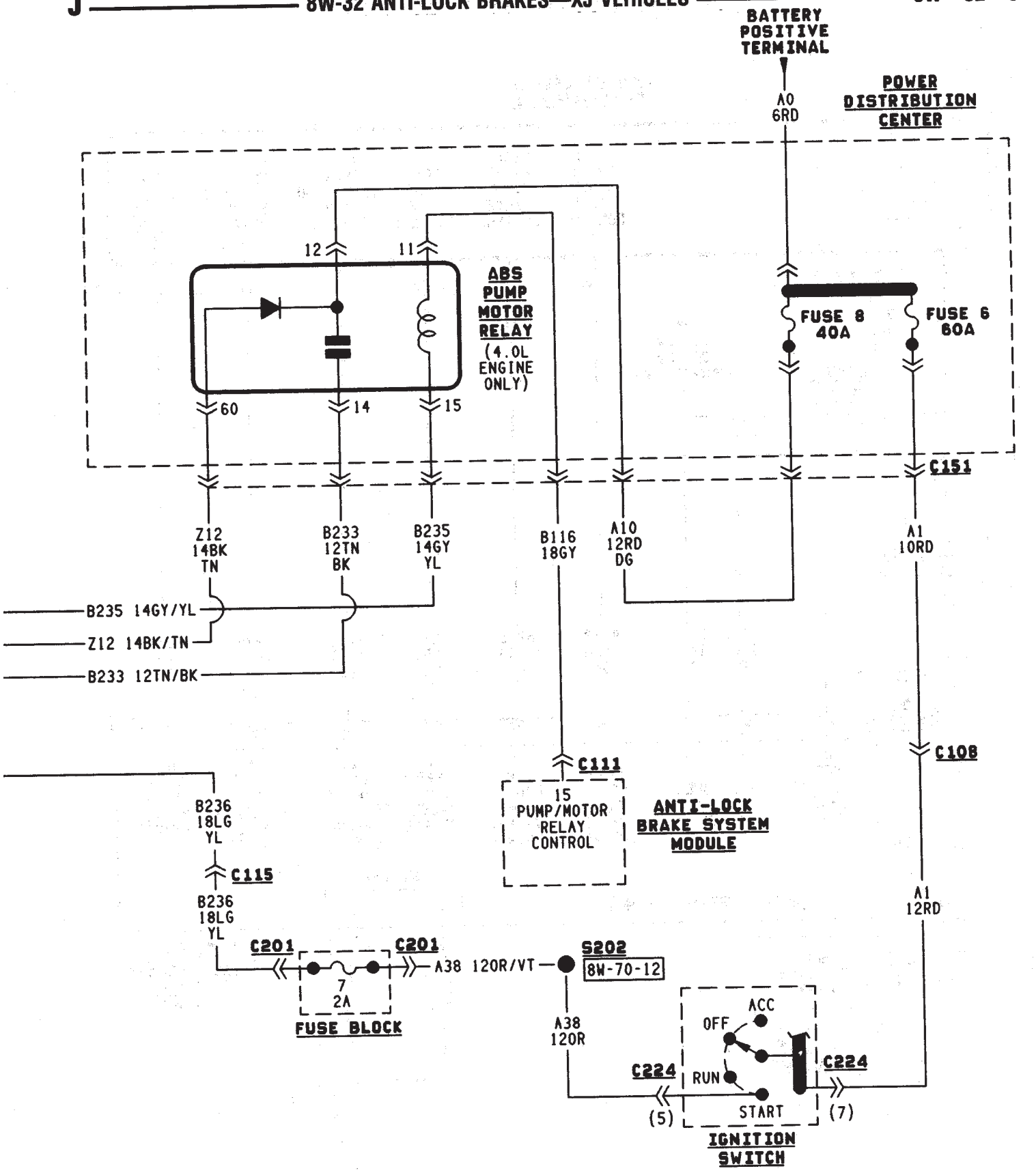
BATTERY POSITIVE TERMINAL
A0 6RD
POWER DISTRIBUTION CENTER
12
11
ABS PUMP MOTOR RELAY (4.0L ENGINE ONLY)
60
14
15
FUSE 8 40A
FUSE 6 60A
C151
Z12 14BK TN
B233 12TN BK
B235 14GY YL
B116 18GY
A10 12RD DG
A1 10RD
B235 14GY/YL
Z12 14BK/TN
B233 12TN/BK
C111
15 PUMP/MOTOR RELAY CONTROL
ANTI-LOCK BRAKE SYSTEM MODULE
C108
B236 18LG YL
C115
B236 18LG YL
A1 12RD
C201
C201
7 2A
FUSE BLOCK
A38 120R/VT
S202
8W-70-12
A38 120R
ACC
OFF
RUN
START
C224
C224
(5)
(7)
IGNITION SWITCH

J958W-7

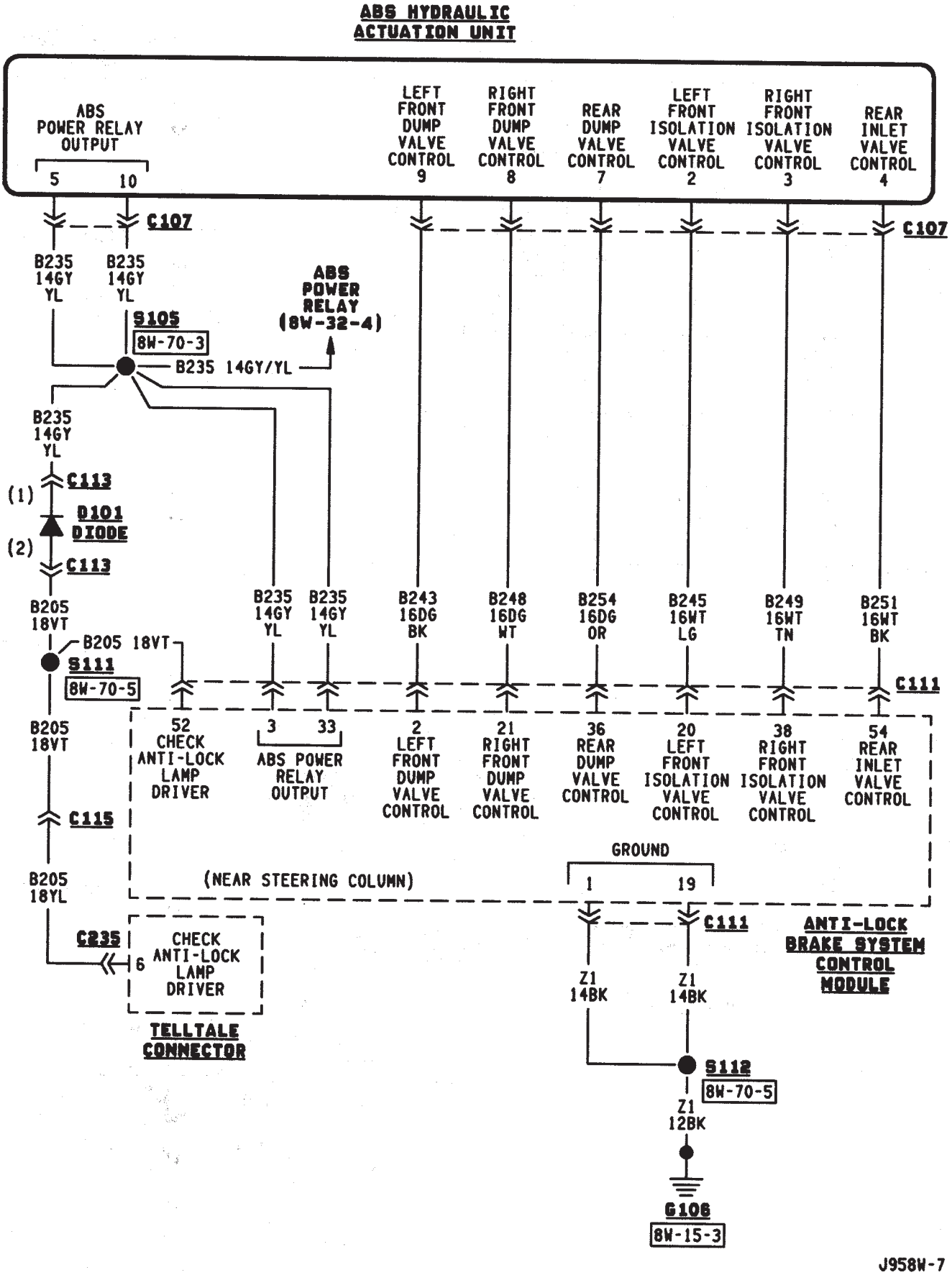
ABS HYDRAULIC ACTUATION UNIT
ABS POWER RELAY OUTPUT
5
10
LEFT FRONT DUMP VALVE CONTROL 9
RIGHT FRONT DUMP VALVE CONTROL 8
REAR DUMP VALVE CONTROL 7
LEFT FRONT ISOLATION VALVE CONTROL 2
RIGHT FRONT ISOLATION VALVE CONTROL 3
REAR INLET VALVE CONTROL 4
C107
B235 14GY YL
B235 14GY YL
S105
8W-70-3
ABS POWER RELAY (8W-32-4)
B235 14GY/YL
B235 14GY YL
C113
(1)
D101 DIODE
(2)
C113
B205 18VT
B205 18VT
S111
8W-70-5
B235 14GY YL
B235 14GY YL
B243 16DG BK
B248 16DG WT
B254 16DG OR
B245 16WT LG
B249 16WT TN
B251 16WT BK
C111
52 CHECK ANTI-LOCK LAMP DRIVER
3
33
ABS POWER RELAY OUTPUT
2 LEFT FRONT DUMP VALVE CONTROL
21 RIGHT FRONT DUMP VALVE CONTROL
36 REAR DUMP VALVE CONTROL
20 LEFT FRONT ISOLATION VALVE CONTROL
38 RIGHT FRONT ISOLATION VALVE CONTROL
54 REAR INLET VALVE CONTROL
C115
B205 18YL
(NEAR STEERING COLUMN)
GROUND
1
19
C111
ANTI-LOCK BRAKE SYSTEM CONTROL MODULE
C235
6 CHECK ANTI-LOCK LAMP DRIVER
TELLTALE CONNECTOR
Z1 14BK
Z1 14BK
S112
8W-70-5
Z1 12BK
G106
8W-15-3
J958W-7

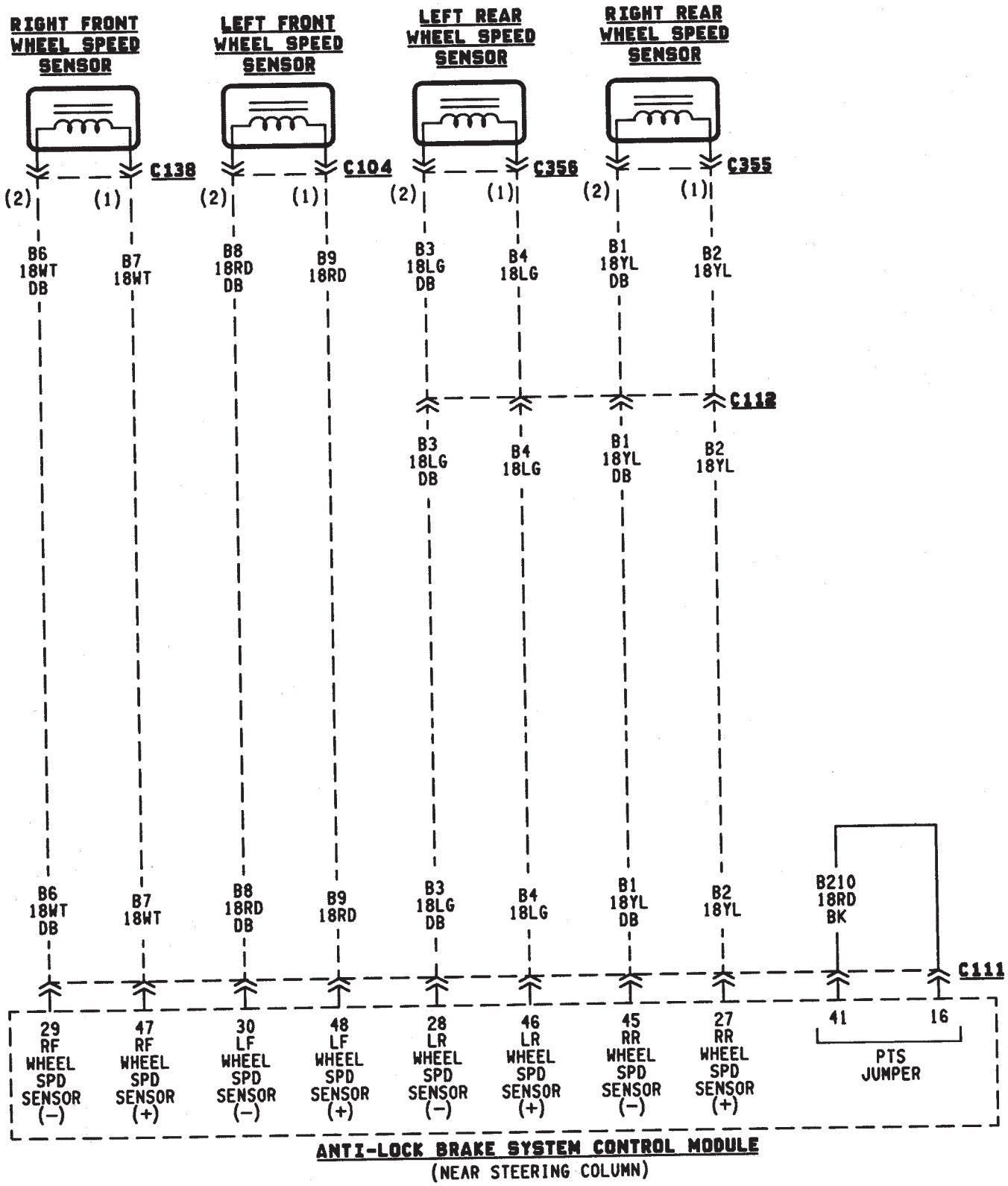
DASHED LINES INDICATE
TWISTED PAIRS
B1+B2, B3+B4, B6+B7, B8+B9
RIGHT FRONT WHEEL SPEED SENSOR
LEFT FRONT WHEEL SPEED SENSOR
LEFT REAR WHEEL SPEED SENSOR
RIGHT REAR WHEEL SPEED SENSOR
C138
C104
C356
C355
C112
C111
(2)
(1)
B6 18WT DB
B7 18WT
B8 18RD DB
B9 18RD
B3 18LG DB
B4 18LG
B1 18YL DB
B2 18YL
B210 18RD BK
29 RF WHEEL SPD SENSOR (−)
47 RF WHEEL SPD SENSOR (+)
30 LF WHEEL SPD SENSOR (−)
48 LF WHEEL SPD SENSOR (+)
28 LR WHEEL SPD SENSOR (−)
46 LR WHEEL SPD SENSOR (+)
45 RR WHEEL SPD SENSOR (−)
27 RR WHEEL SPD SENSOR (+)
41
16
PTS JUMPER
ANTI-LOCK BRAKE SYSTEM CONTROL MODULE
(NEAR STEERING COLUMN)

J958W-7

1995 Jeep Cherokee/Wrangler
Publication No. 81-370-5146
TSB 26-07-95 September, 1995

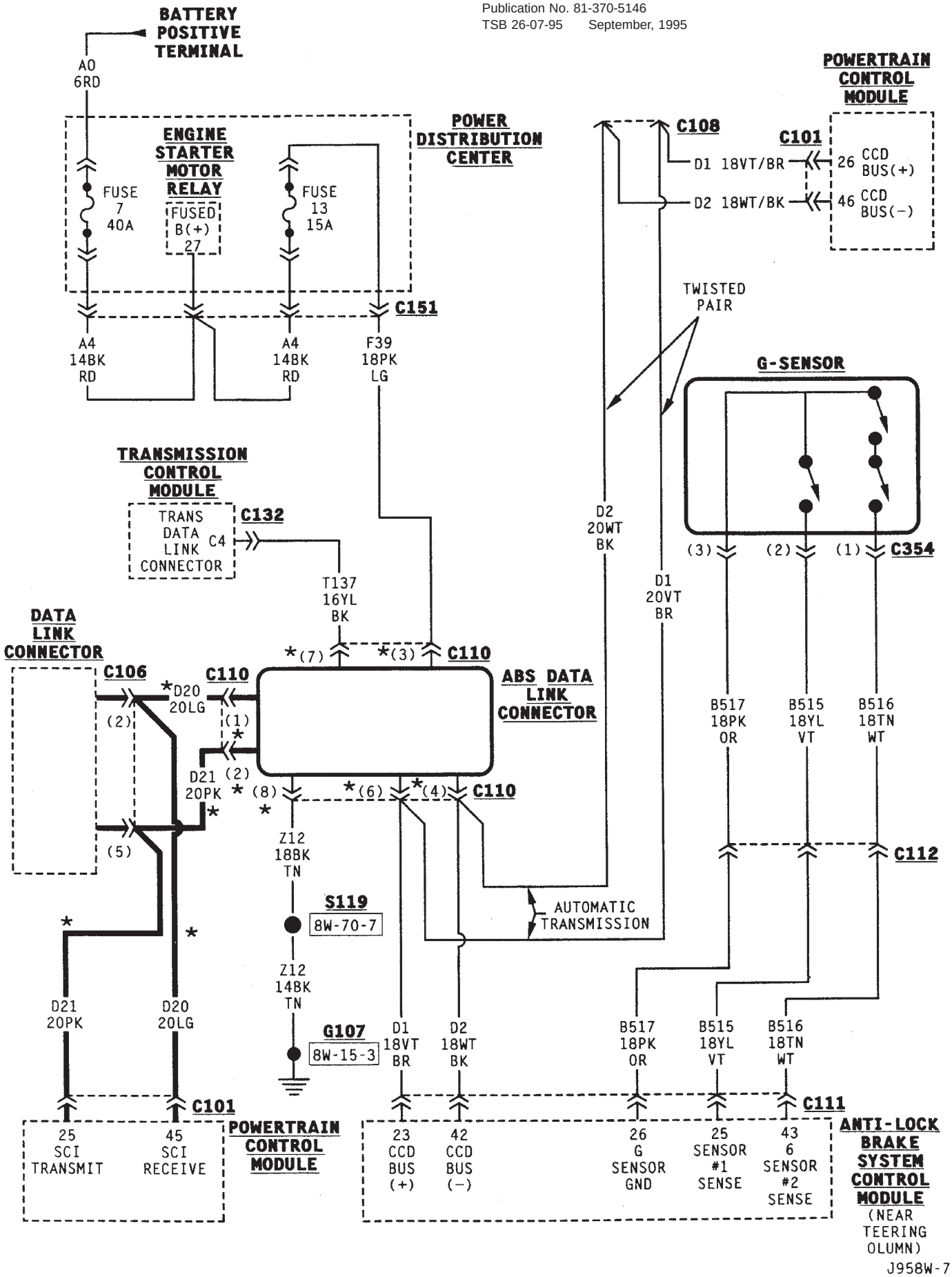

VEHICLE SPEED CONTROL

VEHICLE SPEED CONTROL

The vehicle speed control system is operated by the Powertrain Control Module (PCM). Circuit F12 from fuse 11 in the Power Distribution Center (PDC) supplies battery voltage to the vehicle speed control ON/OFF switch. Circuit A21 supplies voltage to fuse 11 when the ignition switch is in the START or RUN positions. In the START or RUN position the ignition switch connects circuit A21 with circuit A1. Fuse 6 in the PDC protects circuit A1.

The vehicle speed control ON/OFF switch supplies voltage to the SET/COAST and RESUME/ACCEL switches. Both switches send signals to the PCM (which supplies the ground path for the switches).

The PCM controls the vent and vacuum functions of the speed control servo on circuits V35 and V36. Depending on the signal it receives from the vehicle speed control switches, the PCM either applies vacuum to, or vents vacuum from, the servo. Circuit V36 from cavity 33 of the PCM sends the vacuum signal to the servo. Circuit V35 from cavity 53 sends the vent signal.

Circuit V32 signals to the PCM that the speed control switch is in the ON position. The V32 circuit connects to cavity 49 of the PCM. Circuit V32 also connects to the stop lamp switch.

In the CLOSED position, the stop lamp switch connects circuit V32 with circuit V30 to power the speed control servo. Circuit Z1 provides ground for the speed control servo.

Circuit V31 provides the SET/COAST signal to cavity 48 of the PCM. Circuit V33 sends the RESUME/ACCEL signal to cavity 50 of the PCM.

Circuit K29 connects to cavity 29 of the PCM and to ground through the stop lamp switch. The stop lamp switch OPENS when the operator depresses the brake pedal. The PCM disables speed control when the stop lamp switch opens. From the stop lamp switch, circuit Z1 provides ground for circuit K29.

HELPFUL INFORMATION

- Circuit K29 also connects to the ABS control module on vehicles with all wheel anti-lock brakes.
- On vehicles with the 4.0L Engine and Automatic Transmission, Circuit K29 connects to the Transmission Control Module (TCM).

DIAGRAM INDEX

Component	Page
ABS Control Module	8W-32-4 thru 8
ABS Hydraulic Unit	8W-32-6
ABS Power Relay	8W-32-4
ABS Pump Motor	8W-32-5
ABS Pump Motor Relay	8W-32-4
Data Link Connector	8W-32-8
Diode	8W-32-6
Fuse 6 (PDC)	8W-32-5
Fuse 7 (Fuse Block)	8W-32-5
Fuse 7 (PDC)	8W-32-8
Fuse 8 (PDC)	8W-32-5
Fuse 10 (PDC)	8W-32-4
Fuse 13 (PDC)	8W-32-8
G-Sensor	8W-32-8
Ignition Switch	8W-32-5
Powertrain Control Module	8W-32-8
Telltale Connector (Instrument Cluster)	8W-32-6
Transmission Control Module	8W-32-8
Wheel Speed Sensors	8W-32-7

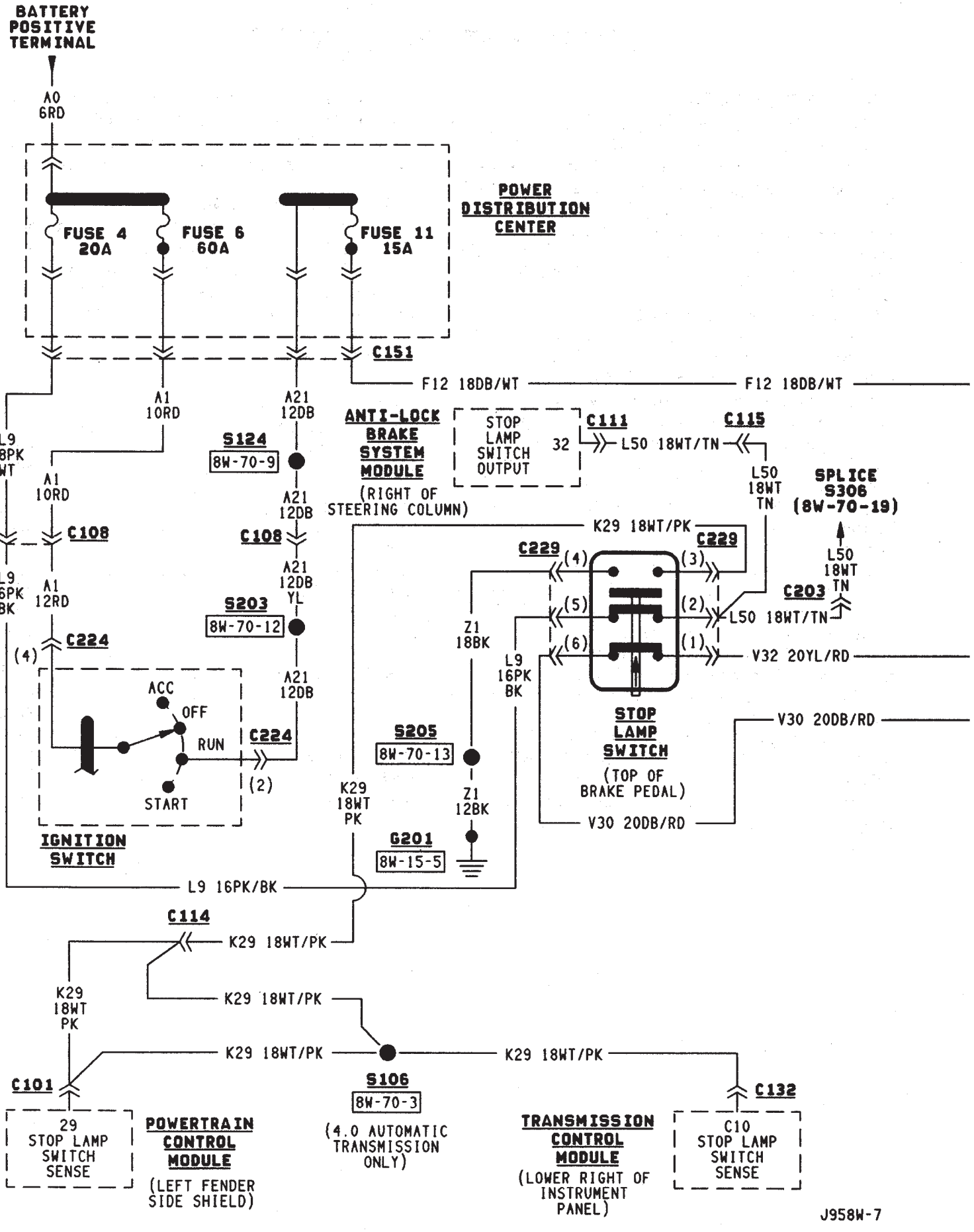
BATTERY POSITIVE TERMINAL
A0 6RD
POWER DISTRIBUTION CENTER
FUSE 4 20A
FUSE 6 60A
FUSE 11 15A
C151
F12 18DB/WT
F12 18DB/WT
A1 10RD
A21 12DB
ANTI-LOCK BRAKE SYSTEM MODULE
(RIGHT OF STEERING COLUMN)
STOP LAMP SWITCH OUTPUT
32
C111
C115
L50 18WT/TN
L50 18WT TN
SPLICE S306 (8W-70-19)
L9 18PK WT
S124
8W-70-9
A1 10RD
A21 12DB
C108
C108
K29 18WT/PK
C229
C229
(4)
(3)
(5)
(2)
(6)
(1)
L50 18WT TN
C203
L50 18WT/TN
V32 20YL/RD
L9 16PK BK
A1 12RD
S203
8W-70-12
A21 12DB YL
C224
(4)
Z1 18BK
L9 16PK BK
ACC
OFF
RUN
START
C224
(2)
A21 12DB
S205
8W-70-13
STOP LAMP SWITCH
(TOP OF BRAKE PEDAL)
V30 20DB/RD
V30 20DB/RD
IGNITION SWITCH
K29 18WT PK
Z1 12BK
G201
8W-15-5
L9 16PK/BK
C114
K29 18WT/PK
K29 18WT PK
K29 18WT/PK
K29 18WT/PK
K29 18WT/PK
C101
S106
8W-70-3
C132
29 STOP LAMP SWITCH SENSE
POWERTRAIN CONTROL MODULE
(LEFT FENDER SIDE SHIELD)
(4.0 AUTOMATIC TRANSMISSION ONLY)
TRANSMISSION CONTROL MODULE
(LOWER RIGHT OF INSTRUMENT PANEL)
C10 STOP LAMP SWITCH SENSE
J958W-7

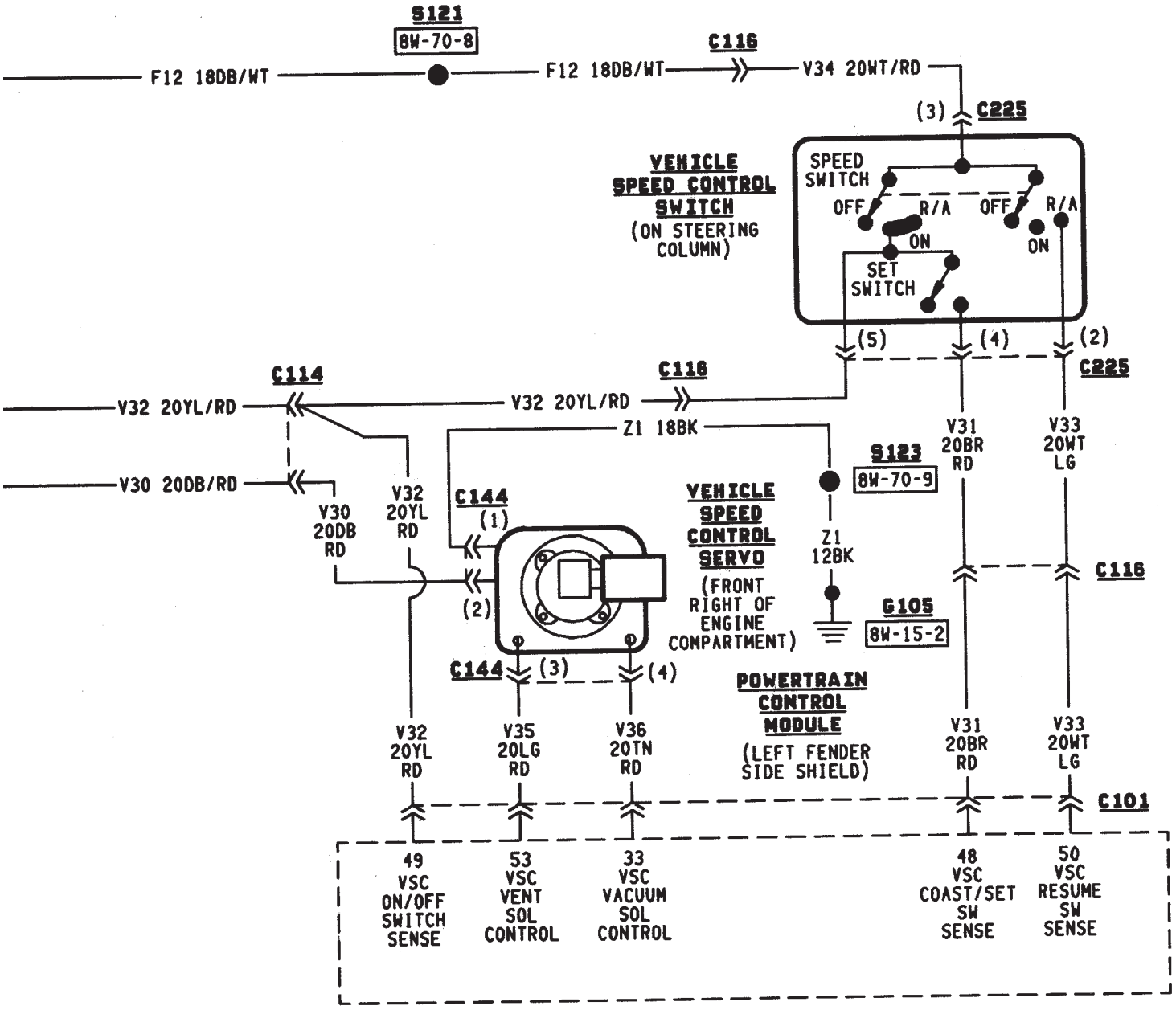
S121
8W-70-8
C116
F12 18DB/WT
F12 18DB/WT
V34 20WT/RD
(3)
C225
VEHICLE SPEED CONTROL SWITCH
(ON STEERING COLUMN)
SPEED SWITCH
OFF
R/A
OFF
R/A
ON
ON
SET SWITCH
(5)
(4)
(2)
C225
C114
C116
V32 20YL/RD
V32 20YL/RD
Z1 18BK
V31 20BR RD
V33 20WT LG
S123
8W-70-9
V30 20DB/RD
V30 20DB RD
V32 20YL RD
C144
(1)
(2)
VEHICLE SPEED CONTROL SERVO
(FRONT RIGHT OF ENGINE COMPARTMENT)
Z1 12BK
G105
8W-15-2
C116
C144
(3)
(4)
POWERTRAIN CONTROL MODULE
(LEFT FENDER SIDE SHIELD)
V32 20YL RD
V35 20LG RD
V36 20TN RD
V31 20BR RD
V33 20WT LG
C101
49 VSC ON/OFF SWITCH SENSE
53 VSC VENT SOL CONTROL
33 VSC VACUUM SOL CONTROL
48 VSC COAST/SET SW SENSE
50 VSC RESUME SW SENSE

J958W-7

INSTRUMENT CLUSTER

INDEX

	page
ABS Warning Lamp	2
Brake Warning Lamp	2
Charging System Indicator Lamp	3
Cluster Ground	3
Diagram Index	3
Engine Coolant Temperature Gauge	1
Engine Coolant Temperature Warning Lamp	1
Fuel Gauge	1
High-Beam Indicator Lamp	2
Instrument Cluster	1
Low Fuel Warning Lamp	1
Low Washer Fluid Warning Lamp	2
Malfunction Indicator Lamp (MIL)	2
Manual Transmission Up-Shift Lamp	2
Oil Pressure Gauge	2
Oil Pressure Warning Lamp	2
Seat Belt Indicator Warning Lamp	2
Speedometer	2
Tachometer	2
Turn Signal Indicator Lamps	2

INSTRUMENT CLUSTER

The instrument cluster contains the gauges and warning lamps. All gauges have magnetic movements.

When the ignition switch is in the START or RUN position, circuit A21 feeds circuit F87 through fuse 17 in the fuse block. Circuit A1 from fuse 6 in the Power Distribution Center (PDC) supplies voltage to circuit A21. Circuit A1 is HOT at all times.

Circuit F87 connects to the cluster connector to power the gauges and to the telltale connector to power the warning lamps.

Circuit E2 from fuse 19 in the fuse block feeds the illumination lamps. Circuit E2 originates at the headlamp switch and continues through fuse 19. The headlamp switch powers circuit E2 when the parking lamps or headlamp are ON.

Circuit Z2 provides ground for the indicator lamps and illumination lamps.

ENGINE COOLANT TEMPERATURE GAUGE

Circuit G20 connects the engine coolant temperature gauge to the engine coolant temperature sensor. The sensor is a variable resistor and case grounded to the engine. Circuit F87 connects to the instrument cluster left connector and supplies voltage for the gauge.

The gauge uses two coils. Current passing through the coils creates a magnetic field. Position of the gauge needle is controlled by the amount of current passing through the coils to ground at the sensor.

ENGINE COOLANT TEMPERATURE WARNING LAMP

Circuit G20 connects the engine coolant temperature warning lamp to the engine coolant temperature switch. When the switch closes, battery voltage from circuit F87 flows through the lamp to ground through the switch on circuit G20. The engine coolant temperature switch is case grounded to the engine. Circuit F87 connects to the instrument cluster connector and supplies voltage for the lamp.

Circuit G20 also connects to the warning lamp to ground when the ignition switch is in the START position. When the ignition switch is in the START position, the lamp illuminates for a bulb test.

FUEL GAUGE

The fuel level sensor is a variable resistor. Circuit G4 connects the fuel level sensor to the fuel gauge in the instrument cluster. Circuit F87 from fuse 17 in the fuse block supplies voltage to the fuel gauge. The fuel level sensor draws voltage from circuit F87 through the fuel gauge on circuit G4. Circuit G4 connects to circuit 57 in the fuel pump module harness. Circuit 57 connects to the fuel level sensor.

Circuit 99 in the fuel pump module harness connects to circuit Z1. Circuit Z1 provides the ground path for the fuel level sensor. The grounding point for circuit Z1 is the left side of the cowl panel.

As current flows through the coils in the fuel gauge, it creates a magnetic field. One of the coils in the gauge receives fixed current. The other coil is connected to the level sensor. The magnetic field controls the position of the fuel gauge pointer.

The fuel level sensor contains a variable resistor. As the position of the float arm on the fuel level sensor changes, the resistor changes the current flow through second coil in the fuel gauge. A change in current flow alters the magnetic field in the fuel gauge, which changes the pointer position.

LOW FUEL WARNING LAMP

Circuit G4 connects the fuel level sensor to the fuel gauge. The low fuel level module at the rear of the gauge monitors resistance in circuit G4. The low fuel level module powers an light emitting diode (LED) when the resistance in circuit G4 reaches a calibrated level. The LED illuminates the Low Fuel indicator. Refer to Group 8E for additional information.

OIL PRESSURE GAUGE

The case grounded oil pressure sensor is a variable resistor that connects to circuit G6. Circuit G6 connects to the oil pressure gauge.

Circuit F87 connects to the instrument cluster connector and supplies battery voltage to oil pressure gauge. The gauge uses two coils. Current passing through the coils creates a magnetic field. Position of the gauge needle is controlled by the amount of current passing through the coils to ground at the sensor.

OIL PRESSURE WARNING LAMP

The case grounded oil pressure switch connects to circuit G6. Circuit G6 connects to the oil pressure warning lamp. Circuit F87 connects to the instrument cluster connector and supplies battery voltage to oil pressure lamp.

When the oil pressure switch close, battery voltage flows through the warning lamp to ground through the switch, illuminating the lamp.

TACHOMETER

The tachometer module in the instrument cluster operates the tachometer. The Powertrain Control Module (PCM) supplies the signal for the tachometer on circuit G21. Circuit G21 connects to cavity 43 of the PCM.

SPEEDOMETER

The speedometer and odometer receive a signal from the vehicle speed sensor on circuit G7. Circuit G7 also connects to the Powertrain Control Module (PCM) at cavity 47.

ABS WARNING LAMP

Circuit F87 provides power for the ABS warning lamp at the instrument cluster. Ground for the ABS warning lamp is provided by either the ABS control module or by the ABS power relay when the relay is not energized. The ABS control module illuminates the lamp by providing ground on circuit B205.

Circuit B205 splices to connect to circuit B235 through a diode. When the ABS power relay is not energized, it connects circuit B235 to circuit Z12. The ground path for the warning lamp is through the diode to circuit B235, through the ABS power relay to ground on circuit Z12.

The diode between circuit B205 and B235 prevents voltage from flowing to the ABS control module when the ABS power relay switches to supply power on circuit B235.

MALFUNCTION INDICATOR LAMP (MIL)

The PCM provides ground for the instrument cluster malfunction indicator lamp on circuit G3. Circuit G3 connects to cavity 32 of the PCM. Circuit F87 provides voltage for the lamp. The MIL displays the message CHECK ENGINE when illuminated.

For information regarding diagnostic trouble code access using the MIL lamp, refer to Group 14, Fuel Systems.

LOW WASHER FLUID WARNING LAMP

Circuit G29 connects the low washer fluid switch to the warning lamp in the instrument cluster. Circuit F12 supplies battery voltage to the switch.

When the low washer fluid switch closes, it connects circuits G29 and F12. Battery voltage from circuit F12 powers the low washer fluid lamp. Circuit Z1 at the instrument cluster provides ground to illuminate the warning lamp.

SEAT BELT INDICATOR WARNING LAMP

The seat belt indicator warning lamp is activated by the chime/buzzer on circuit G11. Circuit G11 supplies power to instrument cluster for the lamp. Circuit Z1 provides ground for the lamp at the cluster.

The chime/buzzer module powers circuit G11 after it receives an input on circuit G10 indicating the seat belt switch is open.

HIGH-BEAM INDICATOR LAMP

Circuit L3 supplies power for the high-beam indicator lamp. The ground path for the lamp is through circuit Z1. If the vehicle has Daytime Running Lamps (DRL), the DRL module powers circuit L3 through circuit G465. On vehicles not equipped with DRL, the headlamp switch powers circuit L3.

Circuit Z1 provides ground for the indicator lamp at the cluster.

TURN SIGNAL INDICATOR LAMPS

Circuits L61 and L60 power for the turn signal indicator lamps. Circuit L61 powers the left indicator lamp. Circuit L60 powers the right indicator lamp. Circuit Z1 provides ground for the lamps.

BRAKE WARNING LAMP

Circuit F87 supplies power to the park brake lamp. Ground for the park brake lamp is supplied through the case grounded park brake switch or brake warning switch on circuit G9. Circuit G9 Connects to circuit B203. Circuit B203 connects to the brake warning lamp at the instrument cluster.

MANUAL TRANSMISSION UP-SHIFT LAMP

Circuit F87 supplies power for the manual transmission up-shift lamp. The lamp illuminates when the Powertrain Control Module (PCM) provides ground for the lamp on circuit K54. Circuit K54 connects to cavity 54 of the PCM.

CHARGING SYSTEM INDICATOR LAMP

The Powertrain Control Module (PCM) illuminates the charging system indicator lamp by providing ground for the lamp on circuit G12. Circuit G12 connects to cavity 36 of the PCM. Circuit F87 supplies battery voltage to the lamp.

FOUR-WHEEL DRIVE (4WD) SWITCH

When the 4WD switch closes, circuit Z1 provides ground for the 4WD indicator lamp in the instrument cluster. Circuit F87 connects to the instrument cluster and supplies battery voltage to the 4WD indicator lamp. Circuit 107 connects the indicator lamp to the 4WD switch. Circuit 106 connects the lamp to the instrument cluster and circuit F87.

CLUSTER GROUND

Circuit Z1 from the instrument cluster left connector provides ground for the illumination lamps and indicator lamps.

HELPFUL INFORMATION

- If the warning lamps don't operate, check fuse 14 in the fuse block.
- If the indicator lamps and illumination lamps don't operate, check fuse 13 in the fuse block.
- Inspect the ground at the instrument panel lower right reinforcement support.

DIAGRAM INDEX

Component	Page
4WD Switch	8W-40-9
4WD Indicator Lamp	8W-40-9
ABS Control Module	8W-40-9
Brake Warning Switch	8W-40-10
Chime/Buzzer Module	8W-40-8
Daytime Running Lamps Module	8W-40-5, 6
Engine Coolant Temperature Sending Unit	8W-40-6
Engine Oil Pressure Sending Unit	8W-40-6
Fuse 3 (PDC)	8W-40-8
Fuse 5 (PDC)	8W-40-4
Fuse 6 (PDC)	8W-40-4, 8
Fuse 11 (PDC)	8W-40-8
Fuse 16 (PDC)	8W-40-8
Fuse 9 (Fuse Block)	8W-40-8
Fuse 15 (Fuse Block)	8W-40-4
Fuse 17 (Fuse Block)	8W-40-4, 8
Fuse 19 (Fuse Block)	8W-40-4
Headlamp Switch	8W-40-4, 5
Headlamp Delay Module	8W-40-8
Headlamp Dimmer Switch	8W-40-5
Ignition Switch	8W-40-4, 8, 10
Instrument Cluster	8W-40-4, 5
Low Washer Fluid Lamp Switch	8W-40-8
Park Brake Switch	8W-40-10
Powertrain Control Module	8W-40-6
Remote Keyless Entry Module	8W-40-8
Telltale Connector (Instrument Cluster)	8W-40-7 thru 10

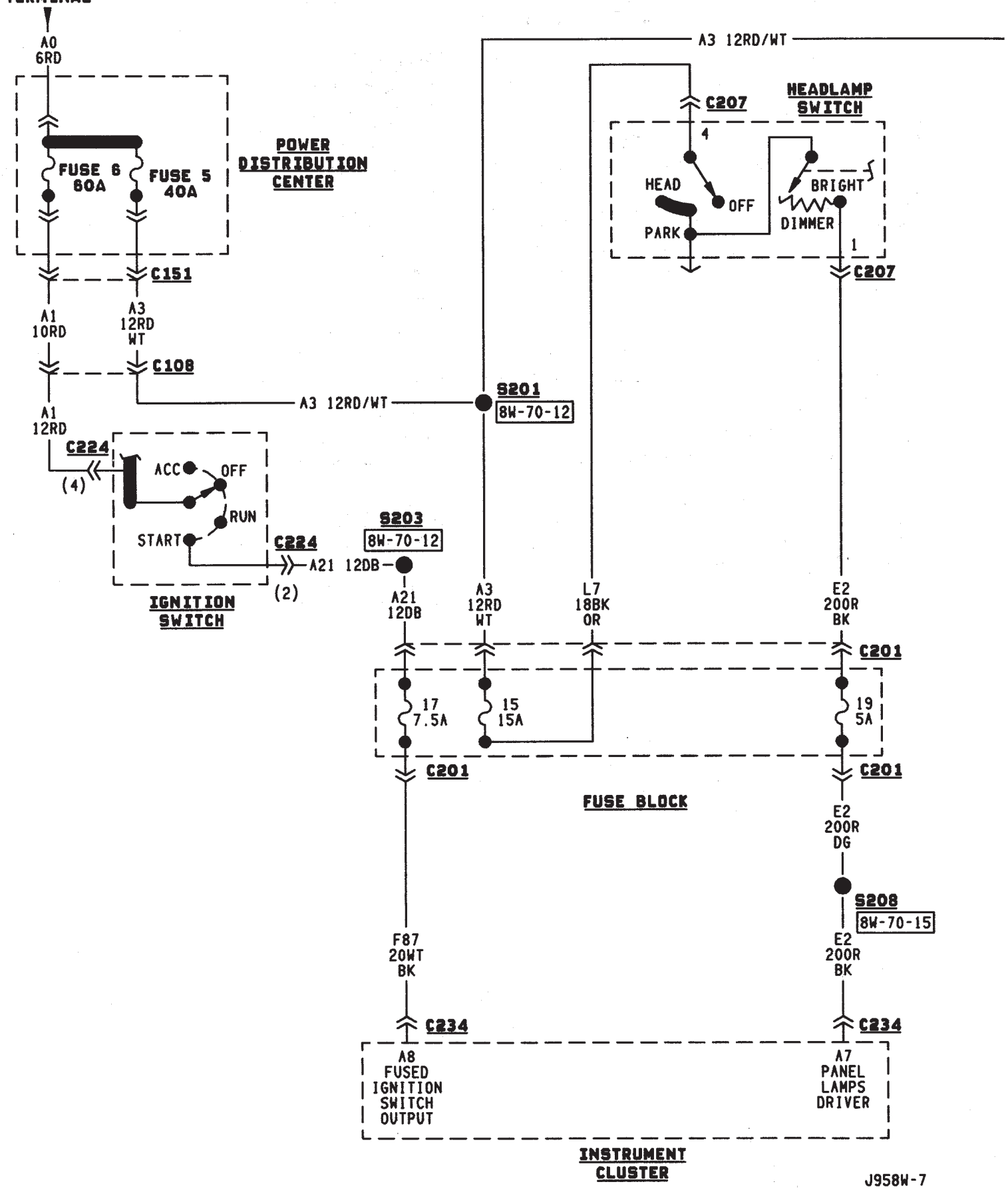
BATTERY POSITIVE TERMINAL
A0 6RD
FUSE 6 60A
FUSE 5 40A
POWER DISTRIBUTION CENTER
C151
A1 10RD
A3 12RD WT
C108
A1 12RD
C224
(4)
ACC
OFF
RUN
START
C224
(2)
IGNITION SWITCH
A3 12RD/WT
S201
8W-70-12
C207
HEADLAMP SWITCH
4
HEAD
OFF
PARK
BRIGHT
DIMMER
1
C207
S203
8W-70-12
A21 12DB
A21 12DB
A3 12RD WT
L7 18BK OR
E2 200R BK
C201
17 7.5A
15 15A
19 5A
C201
C201
FUSE BLOCK
E2 200R DG
S208
8W-70-15
E2 200R BK
F87 20WT BK
C234
C234
A8 FUSED IGNITION SWITCH OUTPUT
A7 PANEL LAMPS DRIVER
INSTRUMENT CLUSTER
J958W-7

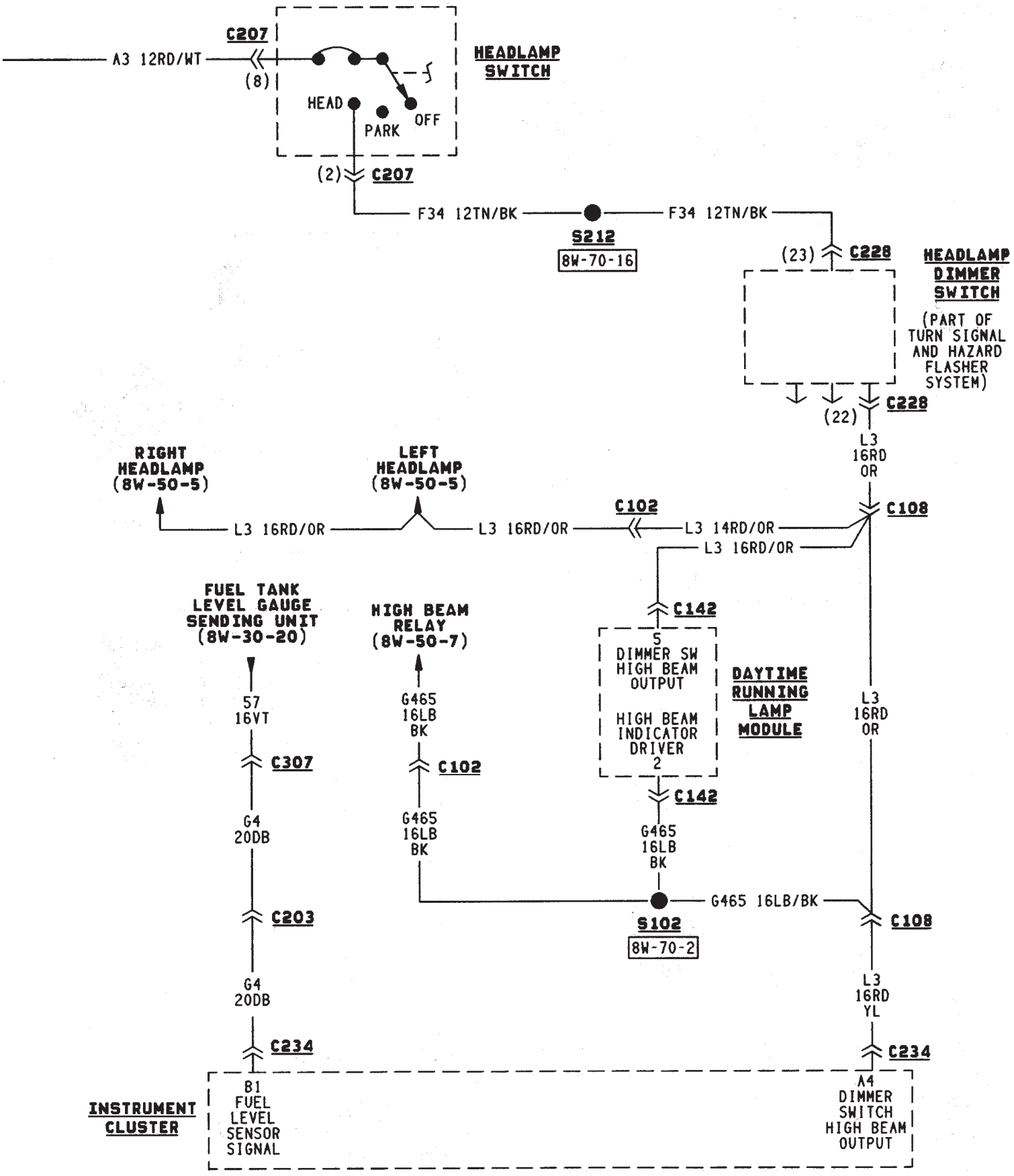
C207
A3 12RD/WT
(8)
HEADLAMP SWITCH
HEAD
PARK
OFF
(2) C207
F34 12TN/BK
S212
8W-70-16
F34 12TN/BK
(23) C228
HEADLAMP DIMMER SWITCH
(PART OF TURN SIGNAL AND HAZARD FLASHER SYSTEM)
(22) C228
L3 16RD OR
C108
RIGHT HEADLAMP (8W-50-5)
LEFT HEADLAMP (8W-50-5)
L3 16RD/OR
L3 16RD/OR
C102
L3 14RD/OR
L3 16RD/OR
C142
5
DIMMER SW HIGH BEAM OUTPUT
HIGH BEAM INDICATOR DRIVER 2
DAYTIME RUNNING LAMP MODULE
C142
G465 16LB BK
S102
8W-70-2
G465 16LB/BK
C108
L3 16RD OR
L3 16RD YL
C234
FUEL TANK LEVEL GAUGE SENDING UNIT (8W-30-20)
57 16VT
C307
G4 20DB
C203
G4 20DB
C234
HIGH BEAM RELAY (8W-50-7)
G465 16LB BK
C102
G465 16LB BK
INSTRUMENT CLUSTER
B1 FUEL LEVEL SENSOR SIGNAL
A4 DIMMER SWITCH HIGH BEAM OUTPUT

J958W-7

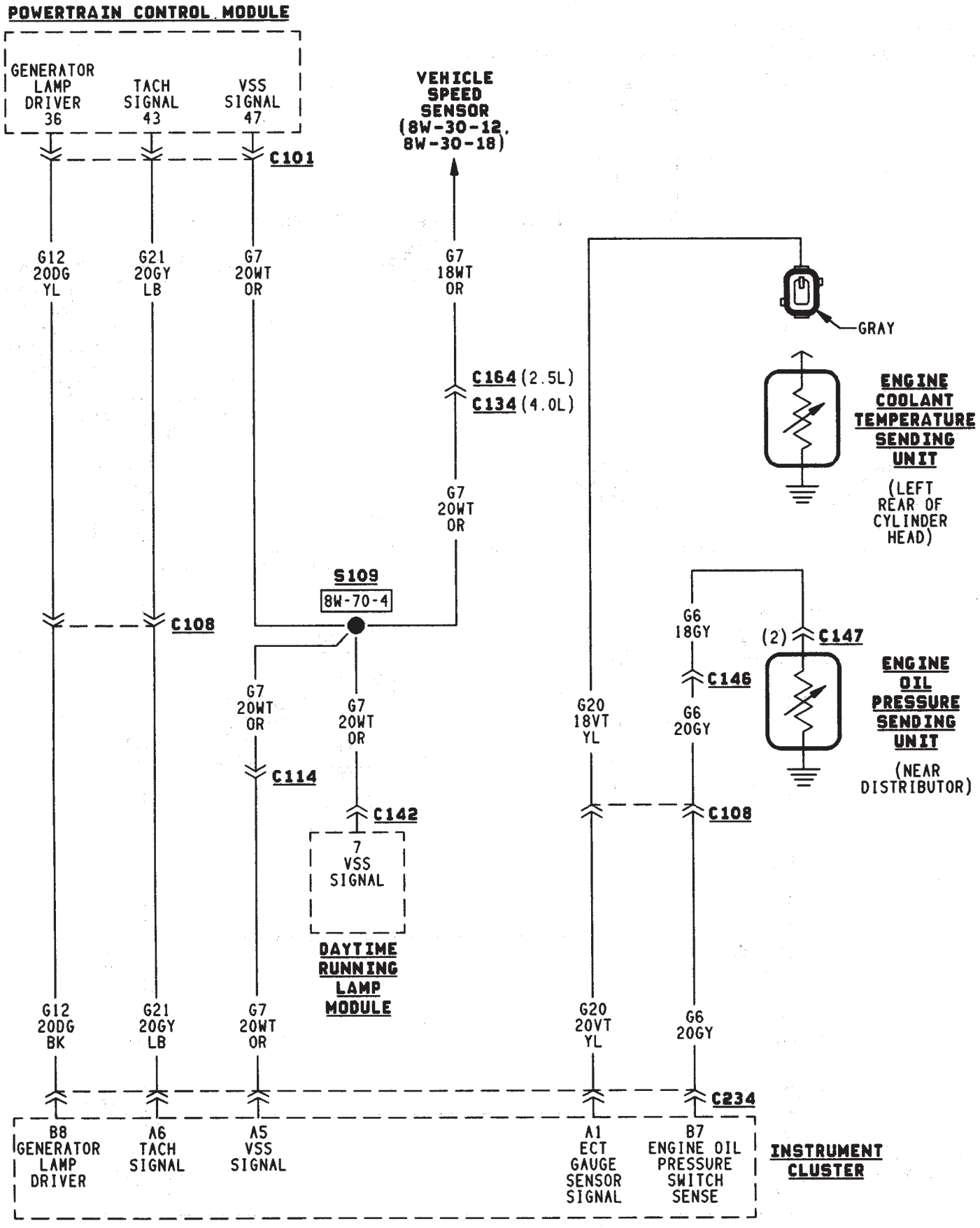
POWERTRAIN CONTROL MODULE
GENERATOR LAMP DRIVER 36
TACH SIGNAL 43
VSS SIGNAL 47
C101
VEHICLE SPEED SENSOR (8W-30-12, 8W-30-18)
G12 20DG YL
G21 20GY LB
G7 20WT OR
G7 18WT OR
C164 (2.5L)
C134 (4.0L)
G7 20WT OR
GRAY
ENGINE COOLANT TEMPERATURE SENDING UNIT
(LEFT REAR OF CYLINDER HEAD)
S109
8W-70-4
C108
G7 20WT OR
G7 20WT OR
C114
C142
7 VSS SIGNAL
DAYTIME RUNNING LAMP MODULE
G20 18VT YL
G6 18GY
(2) C147
C146
G6 20GY
ENGINE OIL PRESSURE SENDING UNIT
(NEAR DISTRIBUTOR)
C108
G12 20DG BK
G21 20GY LB
G7 20WT OR
G20 20VT YL
G6 20GY
C234
B8 GENERATOR LAMP DRIVER
A6 TACH SIGNAL
A5 VSS SIGNAL
A1 ECT GAUGE SENSOR SIGNAL
B7 ENGINE OIL PRESSURE SWITCH SENSE
INSTRUMENT CLUSTER

J958W-7

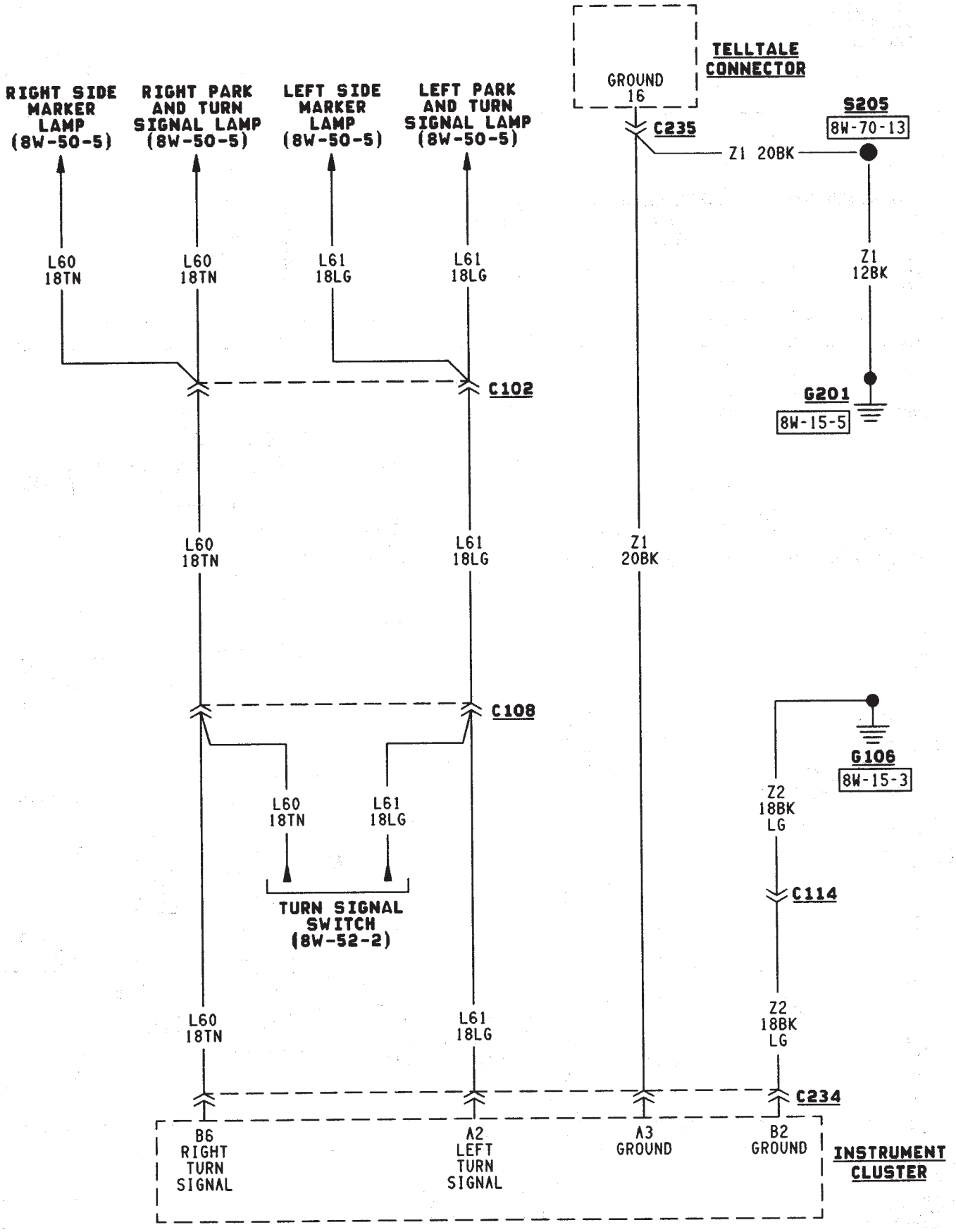
RIGHT SIDE MARKER LAMP (8W-50-5)
RIGHT PARK AND TURN SIGNAL LAMP (8W-50-5)
LEFT SIDE MARKER LAMP (8W-50-5)
LEFT PARK AND TURN SIGNAL LAMP (8W-50-5)
GROUND 16
TELLTALE CONNECTOR
C235
S205
8W-70-13
Z1 20BK
Z1 12BK
G201
8W-15-5
L60 18TN
L61 18LG
C102
Z1 20BK
C108
G106
8W-15-3
Z2 18BK LG
C114
TURN SIGNAL SWITCH (8W-52-2)
C234
B6 RIGHT TURN SIGNAL
A2 LEFT TURN SIGNAL
A3 GROUND
B2 GROUND
INSTRUMENT CLUSTER

J958W-7

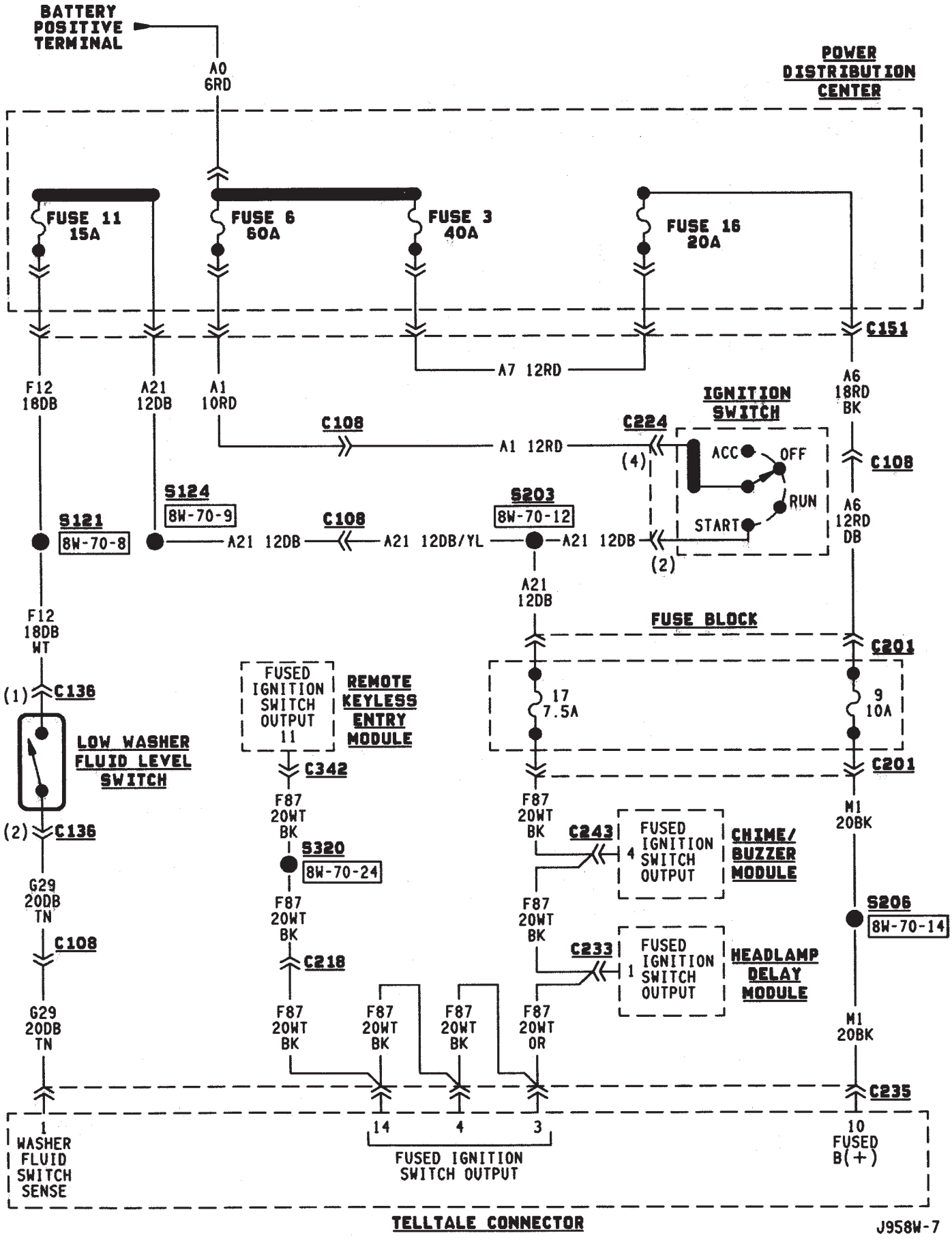
BATTERY POSITIVE TERMINAL
A0 6RD
POWER DISTRIBUTION CENTER
FUSE 11 15A
FUSE 6 60A
FUSE 3 40A
FUSE 16 20A
C151
A7 12RD
F12 18DB
A21 12DB
A1 10RD
A6 18RD BK
IGNITION SWITCH
C108
C224
A1 12RD
(4)
ACC
OFF
RUN
START
(2)
C108
S124
8W-70-9
S121
8W-70-8
A21 12DB
C108
A21 12DB/YL
S203
8W-70-12
A21 12DB
A6 12RD DB
A21 12DB
FUSE BLOCK
C201
F12 18DB WT
(1)
C136
FUSED IGNITION SWITCH OUTPUT 11
REMOTE KEYLESS ENTRY MODULE
17 7.5A
9 10A
C342
C201
LOW WASHER FLUID LEVEL SWITCH
F87 20WT BK
F87 20WT BK
C243
4
FUSED IGNITION SWITCH OUTPUT
CHIME/ BUZZER MODULE
M1 20BK
(2)
C136
S320
8W-70-24
G29 20DB TN
F87 20WT BK
F87 20WT BK
C233
1
FUSED IGNITION SWITCH OUTPUT
HEADLAMP DELAY MODULE
S206
8W-70-14
C108
C218
G29 20DB TN
F87 20WT BK
F87 20WT BK
F87 20WT BK
F87 20WT OR
M1 20BK
C235
1 WASHER FLUID SWITCH SENSE
14
4
3
FUSED IGNITION SWITCH OUTPUT
10 FUSED B(+)
TELLTALE CONNECTOR
J958W-7

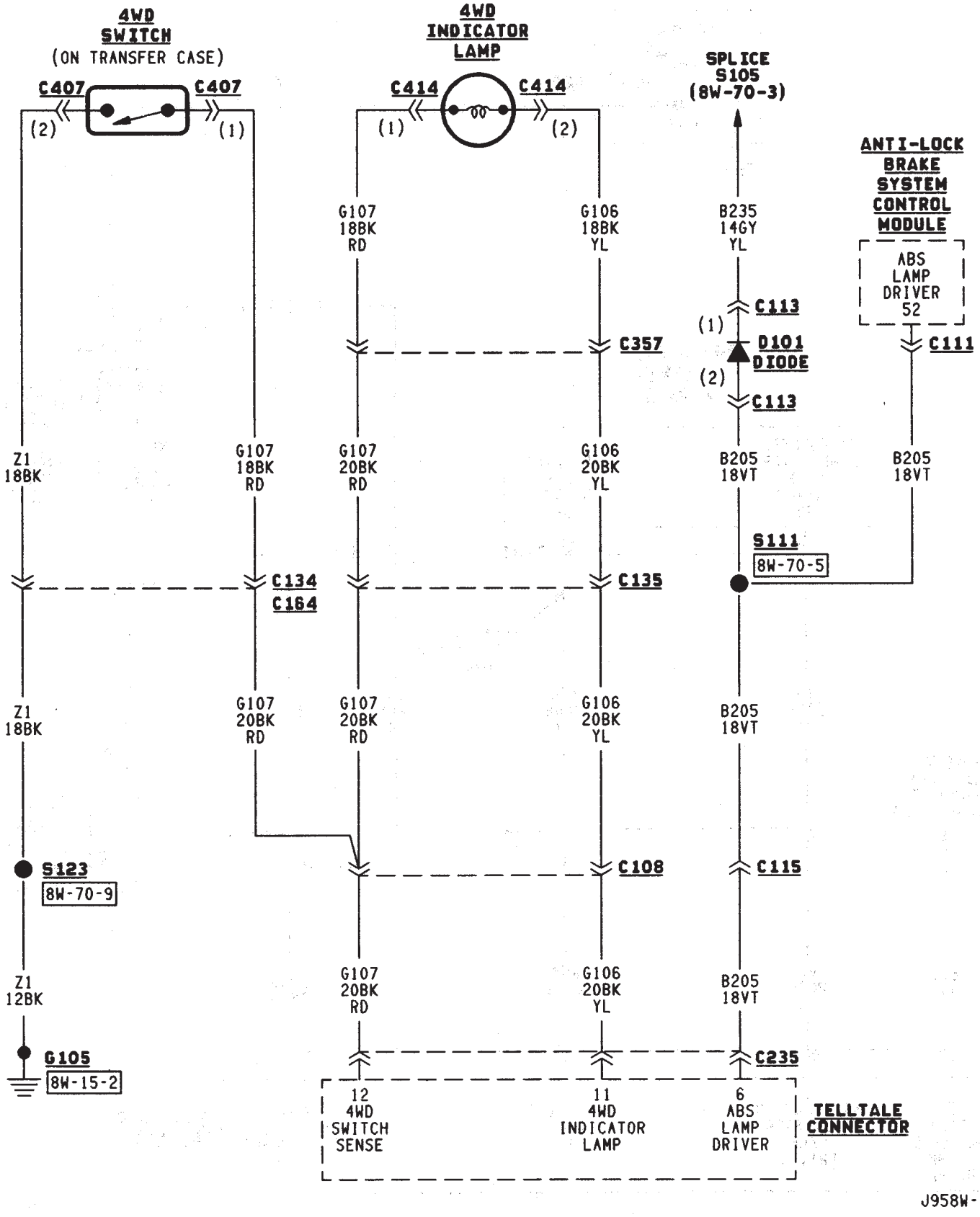
4WD SWITCH
(ON TRANSFER CASE)
C407
C407
(2)
(1)
4WD INDICATOR LAMP
C414
C414
(1)
(2)
SPLICE S105 (8W-70-3)
ANTI-LOCK BRAKE SYSTEM CONTROL MODULE
ABS LAMP DRIVER 52
C111
G107 18BK RD
G106 18BK YL
B235 14GY YL
C113
(1)
D101 DIODE
(2)
C113
C357
Z1 18BK
G107 18BK RD
G107 20BK RD
G106 20BK YL
B205 18VT
B205 18VT
S111
8W-70-5
C134
C164
C135
Z1 18BK
G107 20BK RD
G107 20BK RD
G106 20BK YL
B205 18VT
S123
8W-70-9
C108
C115
Z1 12BK
G107 20BK RD
G106 20BK YL
B205 18VT
G105
8W-15-2
C235
12 4WD SWITCH SENSE
11 4WD INDICATOR LAMP
6 ABS LAMP DRIVER
TELLTALE CONNECTOR
J958W-7

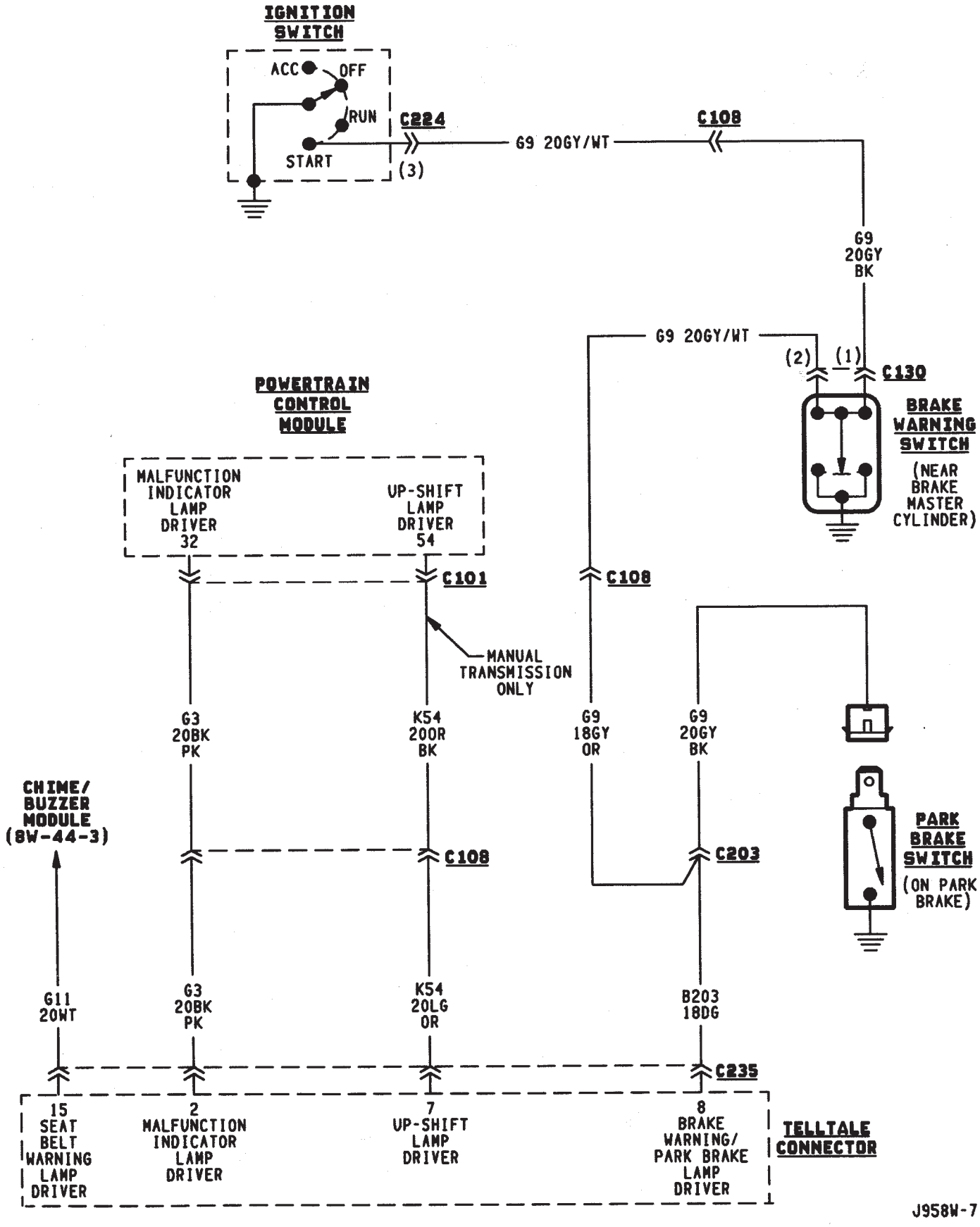
IGNITION SWITCH
ACC
OFF
RUN
START
C224
(3)
G9 20GY/WT
C108
G9 20GY BK
G9 20GY/WT
(2)
(1)
C130
BRAKE WARNING SWITCH
(NEAR BRAKE MASTER CYLINDER)
POWERTRAIN CONTROL MODULE
MALFUNCTION INDICATOR LAMP DRIVER 32
UP-SHIFT LAMP DRIVER 54
C101
C108
MANUAL TRANSMISSION ONLY
G3 20BK PK
K54 200R BK
G9 18GY OR
G9 20GY BK
CHIME/ BUZZER MODULE (8W-44-3)
C108
C203
PARK BRAKE SWITCH
(ON PARK BRAKE)
G11 20WT
G3 20BK PK
K54 20LG OR
B203 18DG
C235
15 SEAT BELT WARNING LAMP DRIVER
2 MALFUNCTION INDICATOR LAMP DRIVER
7 UP-SHIFT LAMP DRIVER
8 BRAKE WARNING/ PARK BRAKE LAMP DRIVER
TELLTALE CONNECTOR
J958W-7

HORN/CIGAR LIGHTER

HORN

The horn system uses two switches and horn relay. The horn switches are on the steering wheel.

Circuit A7 from fuse 3 in the Power Distribution Center (PDC) feeds a fuse block bus bar that powers circuit X4 through fuse 11. Circuit X4 is HOT at all times and powers the coil and contact sides of the horn relay.

When the case grounded horn switch is depressed, circuit X3 provides ground for the coil side of the relay and the contacts close. When the contacts close, circuit X2 supplies voltage to the case grounded horns.

HELPFUL INFORMATION

- The horn switches are grounded to the steering wheel.
- Circuit X4 is double crimped at the coil side of the horn relay.
- Check fuse 3 in the PDC and fuse 11 in the fuse block.

CIGAR LIGHTER

In the ACCESSORY or RUN position, the ignition switch supplies voltage to fuse 2 in the fuse block on circuit A48. Fuse 2 feeds circuit F85 which connects to the cigar lighter. When the lighter is depressed, the contacts inside of the lighter element close and voltage flows to ground on circuit Z1.

HELPFUL INFORMATION

- In the ACCESSORY or RUN position, the ignition switch connects circuit A1 from fuse 6 in the PDC with circuit A48.
- Circuit F85 also powers the radio and LCD relay.

DIAGRAM INDEX

Component	Page
Cigar Lighter	8W-41-3
Fuse 3 (PDC)	8W-41-2
Fuse 6 (PDC)	8W-41-3
Fuse 11 (Fuse Block)	8W-41-2
Fuse 2 (Fuse Block)	8W-41-3
Horns	8W-41-2
Horn Relay	8W-41-2
Horn Switch	8W-41-2
Ignition Switch	8W-41-3

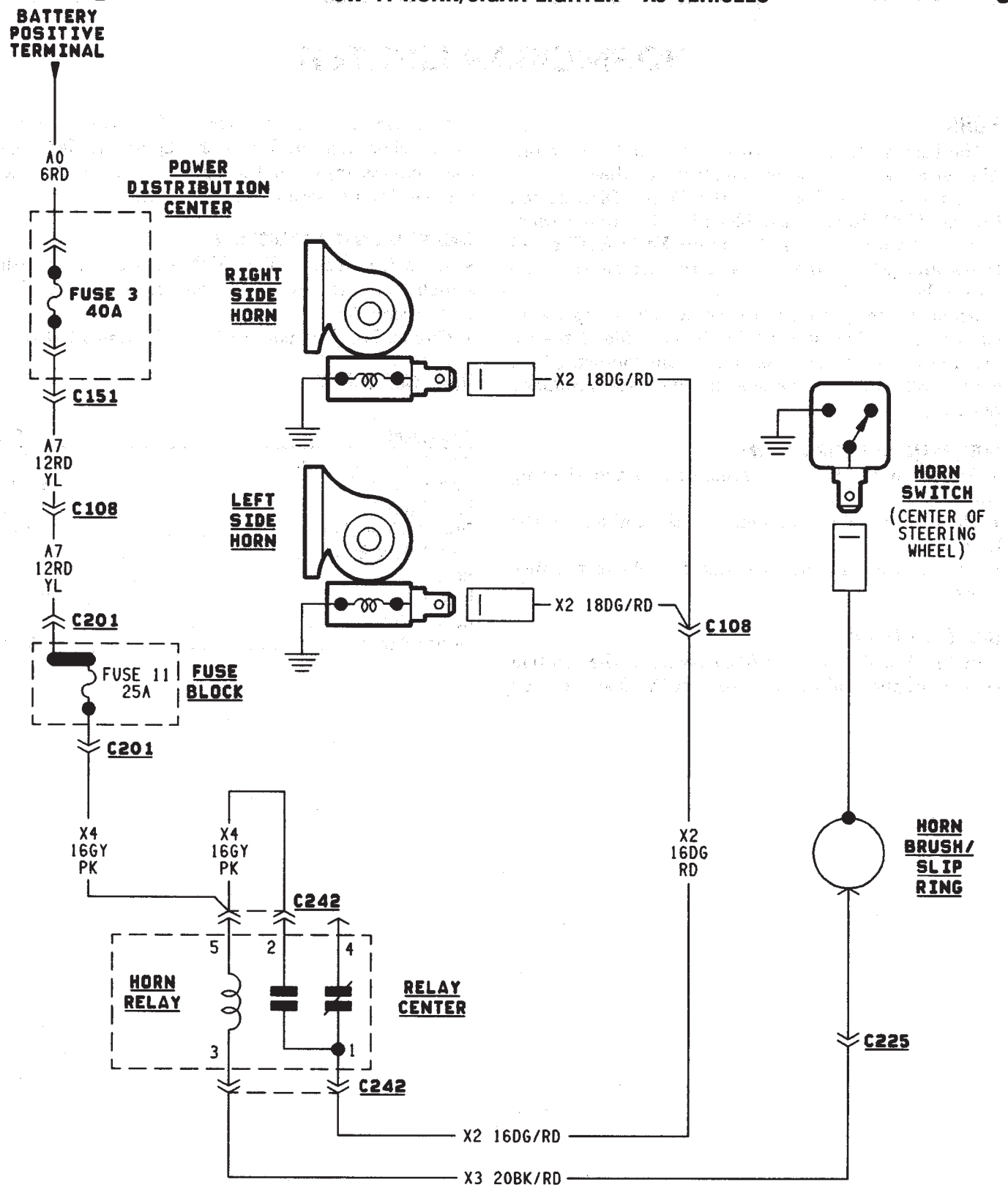
BATTERY POSITIVE TERMINAL
A0 6RD
POWER DISTRIBUTION CENTER
FUSE 3 40A
C151
A7 12RD YL
C108
A7 12RD YL
C201
FUSE 11 25A
FUSE BLOCK
C201
X4 16GY PK
X4 16GY PK
C242
5
2
4
HORN RELAY
RELAY CENTER
3
1
C242
RIGHT SIDE HORN
X2 18DG/RD
LEFT SIDE HORN
X2 18DG/RD
C108
X2 16DG RD
HORN SWITCH
(CENTER OF STEERING WHEEL)
HORN BRUSH/ SLIP RING
C225
X2 16DG/RD
X3 20BK/RD

J958W-7

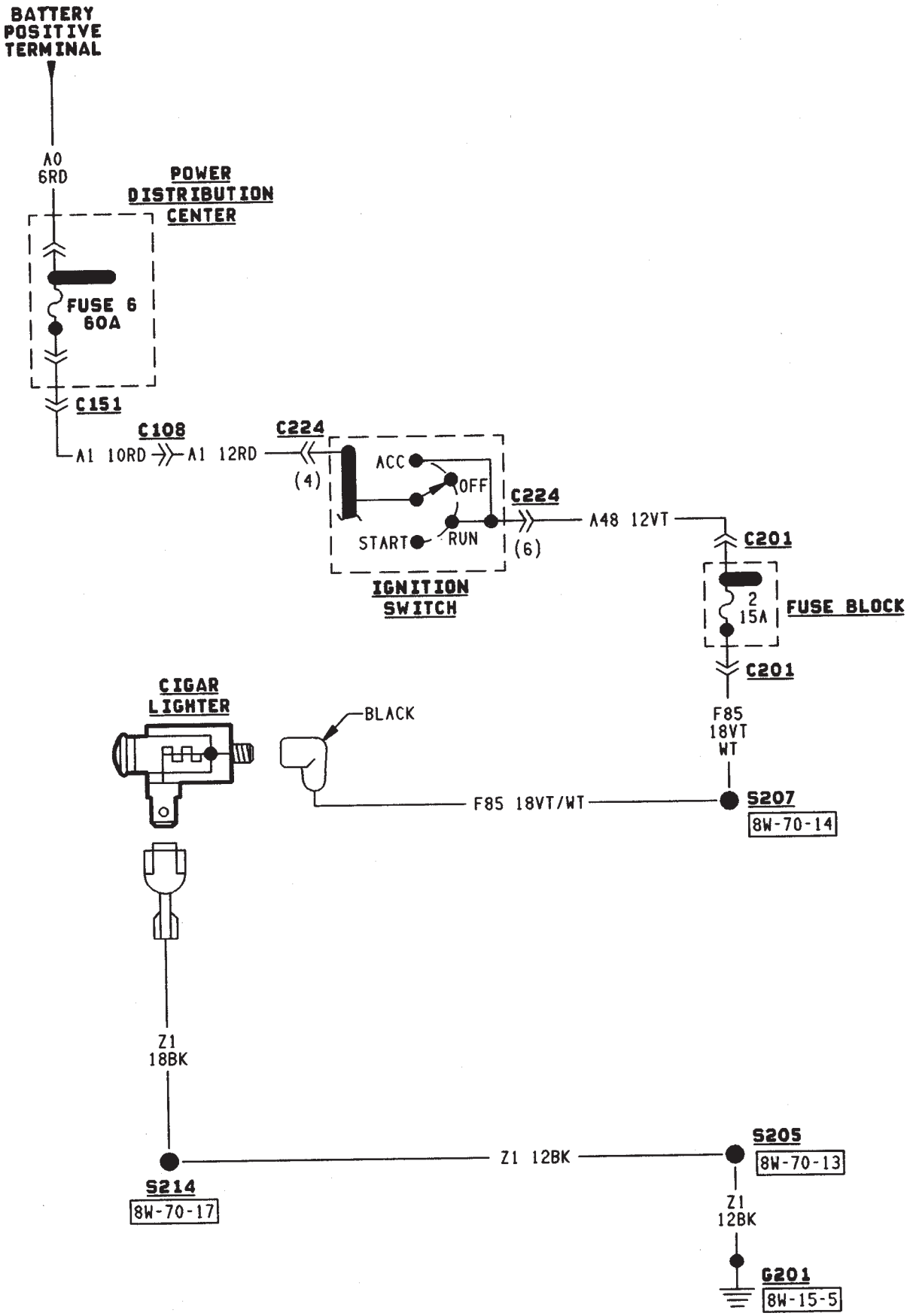
BATTERY POSITIVE TERMINAL
A0 6RD
POWER DISTRIBUTION CENTER
FUSE 6 60A
C151
C108
A1 10RD
A1 12RD
C224
(4)
ACC
OFF
START
RUN
C224
(6)
IGNITION SWITCH
A48 12VT
C201
2 15A
FUSE BLOCK
C201
F85 18VT WT
CIGAR LIGHTER
BLACK
F85 18VT/WT
S207
8W-70-14
Z1 18BK
S214
8W-70-17
Z1 12BK
S205
8W-70-13
Z1 12BK
G201
8W-15-5

J958W-7

AIR CONDITIONING/HEATER

CONTENTS

page

A/C-HEATER SYSTEM 1
HEATER SYSTEM 1

GENERAL INFORMATION

This section of the wiring diagrams is divided into two sub-sections; Heater, and A/C and Heater. When referring to the circuit descriptions or wiring diagrams, ensure that you use the correct sub-section.

HEATER SYSTEM

BLOWER MOTOR

In the RUN or ACCESSORY position, the ignition switch connects circuit A1 from fuse 6 in the Power Distribution Center (PDC) to circuit A48. Circuit A48 supplies battery voltage to fuse 5 in the fuse block. Fuse 5 supplies power to the heat mode switch on circuit C7.

Circuit C43 from the heat mode switch splices to supply voltage to the blower motor switch and the blower motor resistor block. The blower motor switch sets blower motor speed to HIGH, M1, M2, or LOW.

When the blower motor switch is in the LOW position, circuit C43 from the heat mode supplies voltage to the resistor block. Voltage does not pass through the blower motor switch in the LOW position.

In the M1 position, the blower motor switch supplies voltage to the resistor block on circuit C4. From circuit C4, voltage passes through three resistors in the resistor block to the blower motor on circuit C1.

In the M2 position, the blower motor supplies voltage to the resistor block on circuit C6. From circuit C6 voltage flows through two resistors to the blower motor on circuit C1.

In the HIGH position, the blower motor switch connects directly to the blower motor on circuit C1. Voltage does not pass through the resistor block.

Circuit Z1 provides ground for the blower motor.

A/C-HEATER SYSTEM

GENERAL INFORMATION

Several fuses supply power for the air conditioning/heater system. In the START or RUN positions, the ignition switch connects circuit A1 from fuse 6 in the Power Distribution Center (PDC) to circuit A21. Circuit A21 powers a bus bar in the PDC that feeds circuit F12 through fuse 11. Circuit F12 feeds the contact side of the A/C compressor clutch relay and the coil side of the radiator fan relay (4.0L engine).

In the RUN or ACCESSORY position, the ignition switch connects circuit A1 from fuse 11 in the PDC to circuit A48. Circuit A48 supplies battery voltage to fuse 5 in the fuse block. Fuse 5 supplies power to the A/C-Heater control switch on circuit C7.

Fuse 13 in the PDC supplies battery voltage to the contact side of the radiator fan relay on circuit F141. Circuit A14 from fuse 15 in the PDC powers PDC fuse 4.

BLOWER MOTOR

In the RUN or ACCESSORY position, the ignition switch connects circuit A1 from fuse 6 in the PDC to circuit A48. Circuit A48 supplies battery voltage to fuse 5 in the fuse block. Fuse 5 supplies power to the A/C-Heater control switch on circuit C7.

Circuit C43 from the A/C-heater switch splices to supply voltage to the blower motor switch and the blower motor resistor block. The blower motor switch sets blower motor speed to HIGH, M1, M2, or LOW.

When the blower motor switch is in the LOW position, circuit C43 from the A/C-Heater switch supplies voltage to the resistor block. Voltage does not pass through the blower motor switch in the LOW position

In the M1 position, the blower motor switch supplies voltage to the resistor block on circuit C4. From circuit C4, voltage passes through three resistors in the resistor block to the blower motor on circuit C1.

In the M2 position, the blower motor supplies voltage to the resistor block on circuit C6. From circuit C6 voltage flows through two resistors to the blower motor on circuit C1.

In the HIGH position, the blower motor switch connects directly to the blower motor on circuit C1. Voltage does not pass through the resistor block.

Circuit Z1 provides ground for the blower motor.

AIR CONDITIONING OPERATION

When the A/C-heater control switch is moved to an A/C position or the defrost position, the Powertrain Control Module (PCM) receives the A/C select signal on circuit C90. Circuit C90 connects to cavity 28 of the PCM.

Circuit also C90 splices to the low pressure switch and to supply battery voltage to the coil side of the A/C compressor clutch relay. If the low pressure switch is closed, circuit C90 connects to circuit C21. Circuit C21 supplies battery voltage to the A/C cycling switch. Circuit C91 from the A/C cycling switch provides the A/C request signal to the PCM. Circuit C91 connects to cavity 27 of the PCM. Circuit Z1 provides ground for the A/C cycling switch.

After receiving the A/C request signal, the PCM supplies ground for the A/C compressor clutch relay on circuit C13. Circuit F12 from fuse 11 in the PDC supplies battery voltage to the contact side of the A/C compressor clutch relay. When the PCM grounds the relay, the contacts close and connect circuit F12 to circuit C3. Circuit C3 feeds the A/C compressor clutch.

Also, after receiving the A/C request signal, the PCM supplies ground for the coil side of the radiator fan relay on circuit C27 (4.0L engine). Circuit C27 connects to cavity 31 of the PCM. Circuit F12 supplies battery voltage to the coil side of the relay.

When the PCM grounds the coil side of the radiator fan relay, the contacts close and connects circuit F141 from fuse 4 in the PDC to circuit C25. Circuit C25 feeds the radiator fan motor. Circuit Z1 provides ground for the motor.

HELPFUL INFORMATION

Circuit A14 from PDC fuse 2 powers circuit F141 through fuse 15 in the PDC.

RADIATOR FAN RELAY AND MOTOR

In the START or RUN positions, the ignition switch connects circuit A1 from fuse 6 in the Power Distribution Center (PDC) to circuit A21. Circuit A21 powers a bus bar in the PDC that feeds circuit F12 through fuse 11. Circuit F12 feeds the coil side of the radiator fan relay (4.0L engine).

The PCM supplies ground for the coil side of the radiator fan relay on circuit C27 (4.0L engine). Circuit C27 connects to cavity 31 of the PCM.

When the PCM grounds the coil side of the radiator fan relay, the contacts close and connects circuit F141 from fuse 15 in the PDC to circuit C25. Circuit C25 feeds the radiator fan motor. Circuit Z1 provides ground for the radiator fan motor.

HELPFUL INFORMATION

Circuit A14 from PDC fuse 2 powers circuit F141 through fuse 15 in the PDC.

DIAGRAM INDEX

Component	Page
A/C Compressor Clutch	8W-42-4
A/C Compressor Clutch Relay	8W-42-4
A/C Cycling Switch	8W-42-4
A/C Low Pressure Switch	8W-42-4
A/C Mode Select Switch	8W-42-5
Blower Motor	8W-42-3
Blower Motor Switch	8W-42-3
Blower Motor Resistor	8W-42-3
Fuse 2 (PDC)	8W-42-5
Fuse 5 (Fuse Block)	8W-42-3, 5
Fuse 6 (PDC)	8W-42-3, 5
Fuse 11 (PDC)	8W-42-4
Fuse 15 (PDC)	8W-42-5
Heater Mode Switch	8W-42-3
Ignition Switch	8W-42-3, 4, 5
Powertrain Control Module	8W-42-4
Radiator Fan Motor	8W-42-5
Radiator Fan Relay	8W-42-5

HEATER ONLY

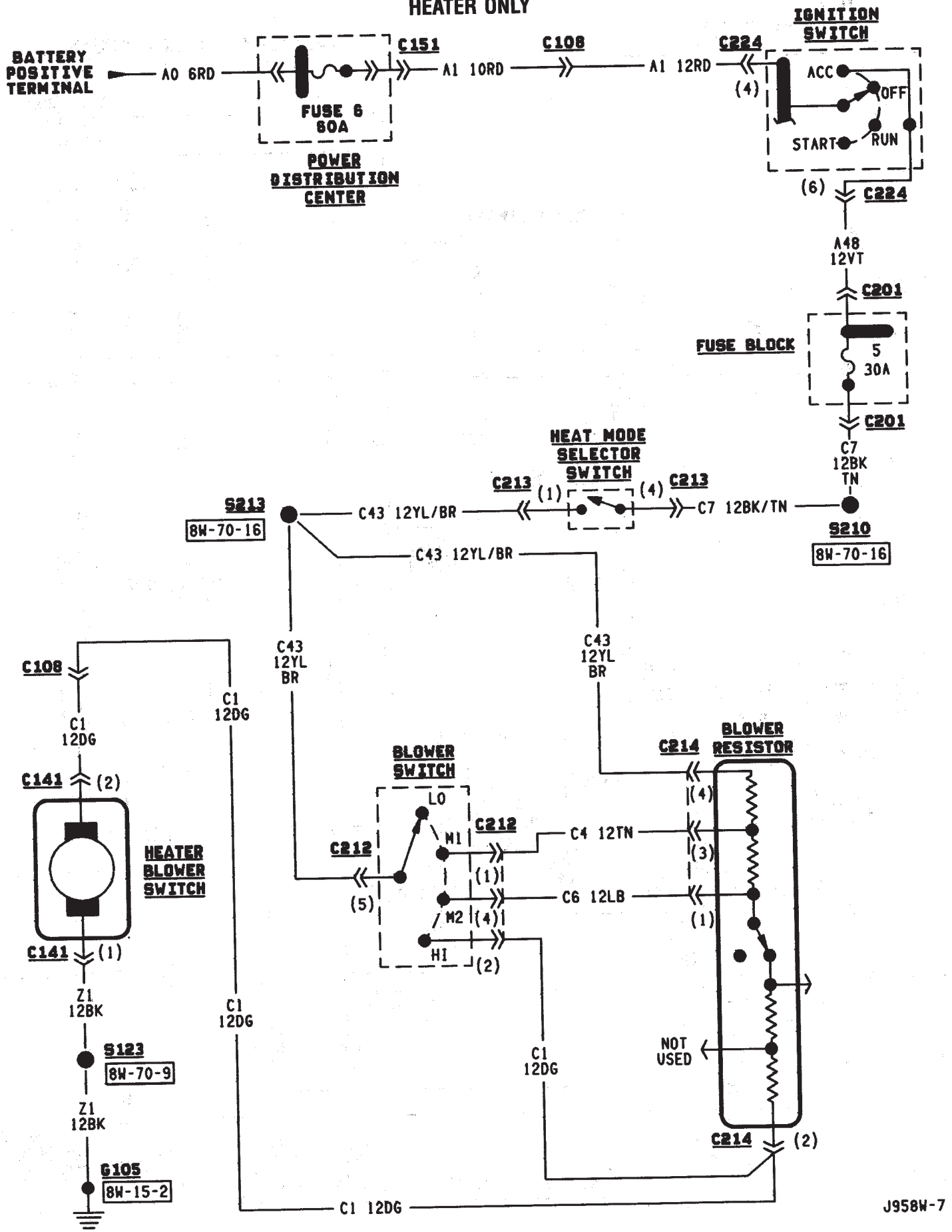
BATTERY POSITIVE TERMINAL
A0 6RD
C151
FUSE 6 60A
POWER DISTRIBUTION CENTER
A1 10RD
C108
A1 12RD
C224
(4)
IGNITION SWITCH
ACC
OFF
START
RUN
(6)
C224
A48 12VT
C201
FUSE BLOCK
5 30A
C201
C7 12BK TN
S210
8W-70-16
HEAT MODE SELECTOR SWITCH
C213
(1)
(4)
C213
C7 12BK/TN
S213
8W-70-16
C43 12YL/BR
C43 12YL/BR
C43 12YL BR
C43 12YL BR
C108
C1 12DG
C141
(2)
HEATER BLOWER SWITCH
C141
(1)
Z1 12BK
S123
8W-70-9
Z1 12BK
G105
8W-15-2
C1 12DG
C1 12DG
C1 12DG
BLOWER SWITCH
LO
M1
M2
HI
C212
C212
(5)
(1)
(4)
(2)
C4 12TN
C6 12LB
C214
BLOWER RESISTOR
(4)
(3)
(1)
NOT USED
C214
(2)
C1 12DG
J958W-7

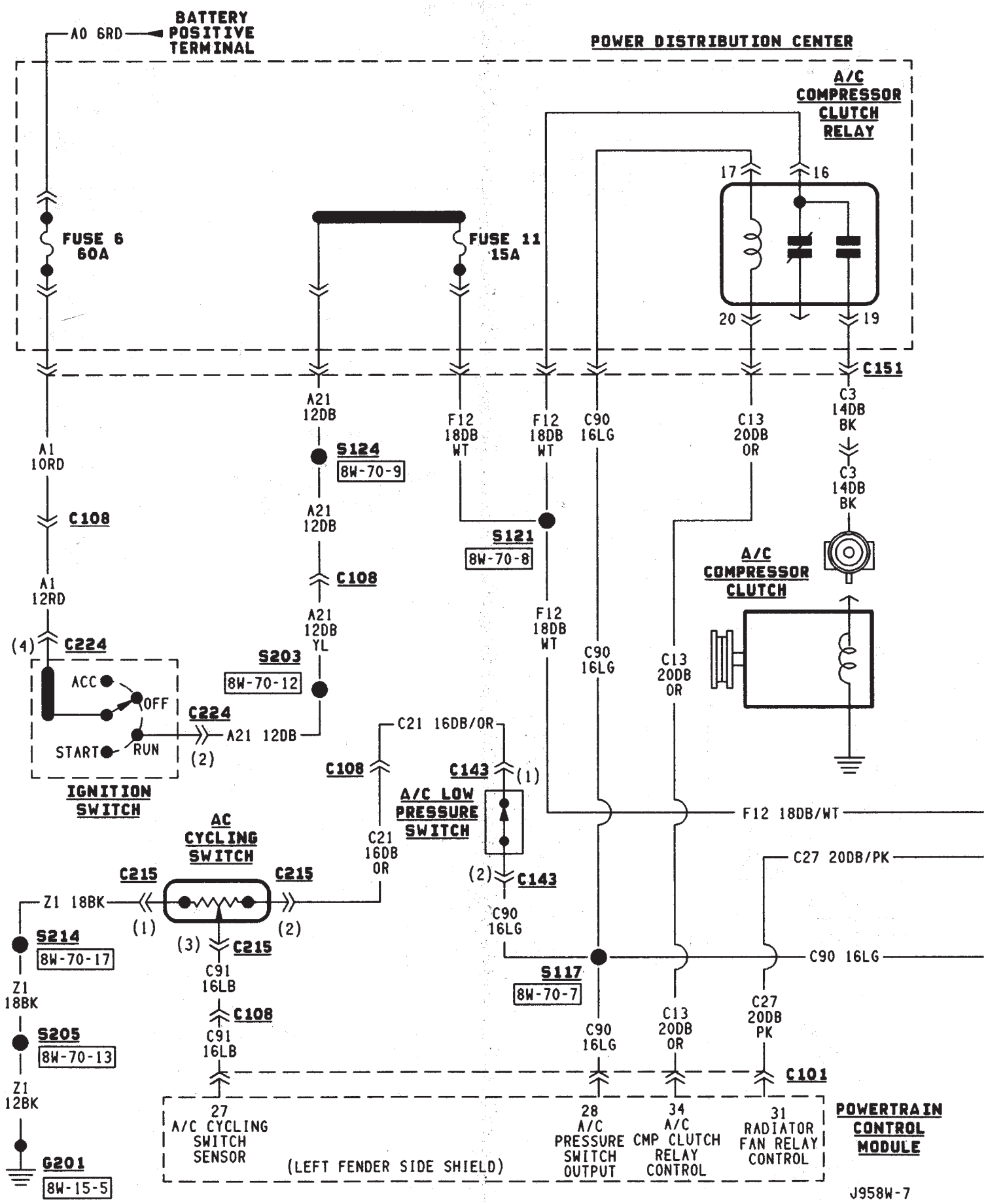
BATTERY POSITIVE TERMINAL
A0 6RD
POWER DISTRIBUTION CENTER
A/C COMPRESSOR CLUTCH RELAY
17
16
20
19
FUSE 6 60A
FUSE 11 15A
C151
A1 10RD
C108
A1 12RD
(4)
C224
ACC
OFF
START
RUN
(2)
IGNITION SWITCH
A21 12DB
S124
8W-70-9
A21 12DB
C108
A21 12DB YL
S203
8W-70-12
C224
A21 12DB
F12 18DB WT
S121
8W-70-8
F12 18DB WT
C90 16LG
C13 20DB OR
C3 14DB BK
C3 14DB BK
A/C COMPRESSOR CLUTCH
C21 16DB/OR
C108
C143
(1)
A/C LOW PRESSURE SWITCH
C21 16DB OR
(2)
C143
C90 16LG
F12 18DB/WT
C27 20DB/PK
C90 16LG
AC CYCLING SWITCH
C215
C215
Z1 18BK
(1)
(2)
(3)
C215
C91 16LB
C108
C91 16LB
S214
8W-70-17
Z1 18BK
S205
8W-70-13
Z1 12BK
G201
8W-15-5
S117
8W-70-7
C90 16LG
C13 20DB OR
C27 20DB PK
C101
27 A/C CYCLING SWITCH SENSOR
(LEFT FENDER SIDE SHIELD)
28 A/C PRESSURE SWITCH OUTPUT
34 A/C CMP CLUTCH RELAY CONTROL
31 RADIATOR FAN RELAY CONTROL
POWERTRAIN CONTROL MODULE
J958W-7

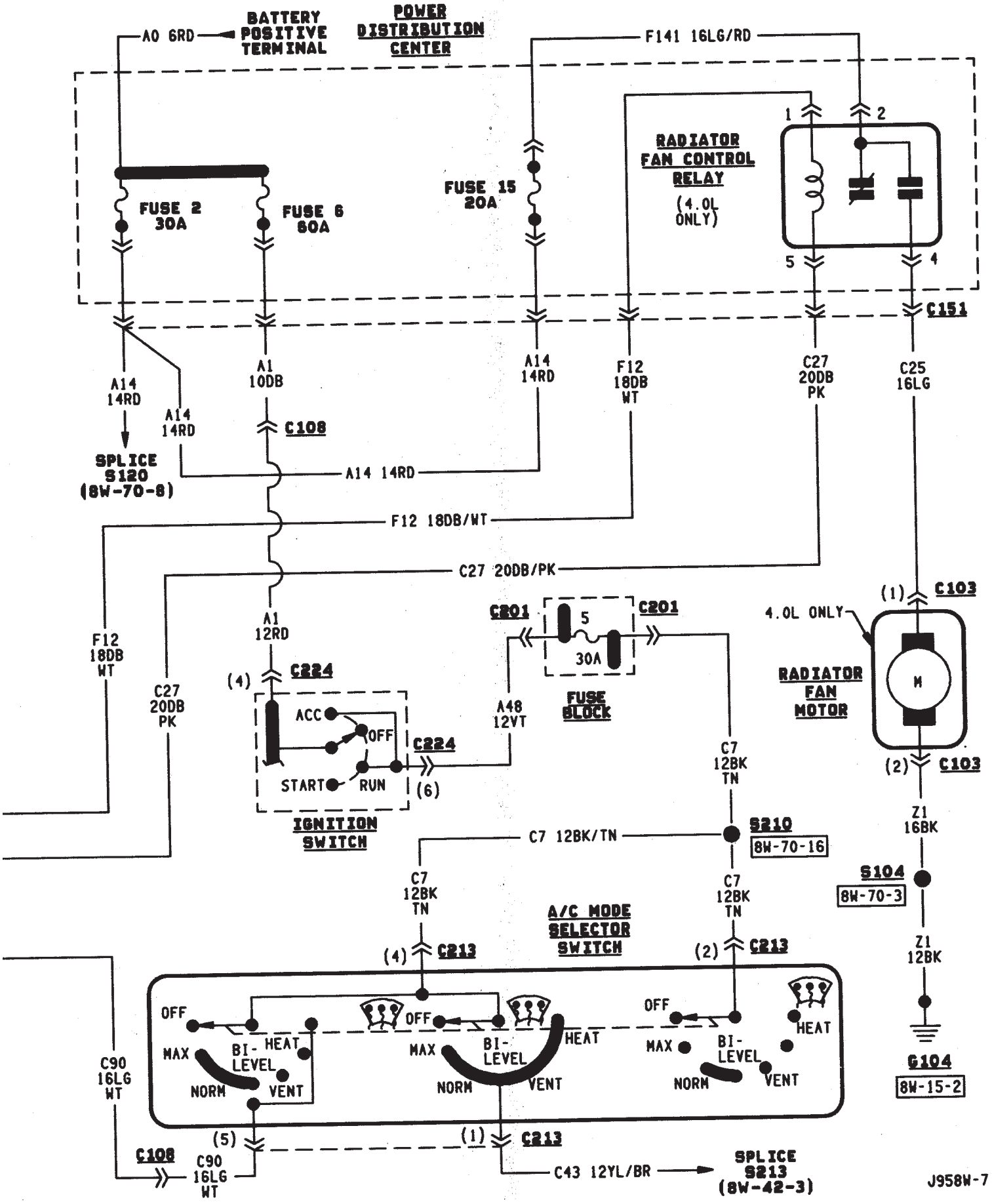
BATTERY POSITIVE TERMINAL
POWER DISTRIBUTION CENTER
A0 6RD
F141 16LG/RD
FUSE 2 30A
FUSE 6 60A
FUSE 15 20A
RADIATOR FAN CONTROL RELAY
(4.0L ONLY)
1
2
5
4
C151
A14 14RD
A1 10DB
C108
A14 14RD
A14 14RD
F12 18DB WT
C27 20DB PK
C25 16LG
SPLICE S120 (8W-70-8)
A14 14RD
F12 18DB/WT
C27 20DB/PK
F12 18DB WT
C27 20DB PK
A1 12RD
(4)
C224
C201
5
30A
C201
FUSE BLOCK
A48 12VT
ACC
OFF
START
RUN
C224
(6)
IGNITION SWITCH
C7 12BK TN
(1)
C103
4.0L ONLY
RADIATOR FAN MOTOR
M
(2)
C103
Z1 16BK
C7 12BK/TN
S210
8W-70-16
S104
8W-70-3
C7 12BK TN
C7 12BK TN
A/C MODE SELECTOR SWITCH
(4)
C213
(2)
C213
Z1 12BK
OFF
MAX
BI-LEVEL
HEAT
NORM
VENT
G104
8W-15-2
C90 16LG WT
(5)
(1)
C213
C108
C90 16LG WT
C43 12YL/BR
SPLICE S213 (8W-42-3)
J958W-7

INTERIOR LIGHTING

INDEX

page

Cargo Lamp, Courtesy Lamps and Dome Lamp 1
Chime/Buzzer Module 2
Diagram Index 2
General Information 1
Glove Box Lamp 1
Ignition Switch Lamp 1
Instrument Panel Illumination Lamps 1
Reading Lamps 2
Time Delay Relay 1
Underhood Lamp 2
Visor Vanity Mirror Lamps 2

GENERAL INFORMATION

Circuit M1 supplies power to the glove box lamp, left courtesy lamp, right courtesy lamp, dome lamp, and cargo lamp. The M1 circuit also connects to the remote keyless entry module. Circuit M1 is protected by the ignition off draw (IOD) fuse (fuse 9) in the fuse block.

Circuit E2 supplies power for the instrument panel illumination lamps.

INSTRUMENT PANEL ILLUMINATION LAMPS

Circuit E2 from the headlamp switch splices to supply power to the following illumination lamps:

- Ash receiver lamp
- Cigar lighter lamp
- Transmission range indicator lamp
- Transfer case range indicator lamp
- A/C-Heater switch lamp
- Heated rear window lamp
- Rear wiper switch lamp
- Fog lamp switch lamp

Fuse 19 in the fuse block protects circuit E2. Circuit Z1 provides ground for all of the illumination lamps except for the cigar lighter lamp. The cigar lighter lamp is case grounded.

HELPFUL INFORMATION

Circuit E2 also supplies power to the radio, LCD relay and the illumination lamps in the instrument cluster.

IGNITION SWITCH LAMP

The time delay relay is used to allow a time-ON function for the ignition switch lamp and the courtesy lamp. Power for the relay is received on the M1 circuit from the IOD fuse (fuse F9) in the fuse block.

Circuit M2 provides ground for the time delay relay through the right and left door ajar switches and the headlamp switch. When a door is opened, or the headlamp switch is moved to the dome lamp position, a ground path is provided for the relay on circuit M2. This energizes the relay, causing the contacts to close.

When the relay contacts close, power is provided through the relay to circuit M50. The M50 circuit supplies current to the ignition switch lamp. Circuit Z1 provides ground for the lamp.

GLOVE BOX LAMP

Circuit M1 from the IOD fuse (fuse F9) in the fuse block powers the glove box lamp. A case grounded switch, in series after the lamp, closes when the glove box door is opened. The switch completes a path to ground on circuit Z1.

CARGO LAMP, COURTESY LAMPS AND DOME LAMP

Circuit M1 from the IOD fuse (fuse F9) in the fuse block supplies power to the cargo, courtesy lamps and dome lamp. This circuit is HOT at all times. The ground path for the lamp is provided in three different ways.

One way is through the door jamb switches. Circuit M2 connects to the door jamb switches from the courtesy and dome lamps. The switches are connected to ground circuit Z1. When a door is opened, the plunger in the switch closes, completing a path to ground.

The second way is through the liftgate switch. Circuit M2 connects to circuit M4 at the cargo lamp. Circuit M4 connects to the liftgate switch. The liftgate switch connects to ground circuit Z1. When the lift gate opens, the plunger in the switch closes, completing a path to ground.

The third ground path is through the headlamp switch. Circuit M2 is spliced in with the headlamp switch. When the operator turns the headlamp switch to the dome lamp ON position, a ground path is provided through the switch.

READING LAMPS

Circuit M1 from the IOD fuse (fuse F9) in the fuse block supplies power to the reading lamps. Circuit M1 is HOT at all times. When the operator depresses the reading lamp, the reading lamp switch closes and supplies ground on circuit Z1.

VISOR VANITY MIRROR LAMPS

Circuit M1 from the IOD fuse (fuse F9) in the fuse block supplies power to the vanity lamps. Circuit M1 is HOT at all times. When the vanity lamps switch closes, voltage flows to vanity mirror lamps. The vanity mirror is case grounded.

UNDERHOOD LAMP

Circuit A6 from fuse 16 in the Power Distribution Center (PDC) supplies battery voltage for the underhood lamp. A mercury switch, in series after the lamp, connects the lamp to ground on circuit Z1. When the hood is raised, mercury inside the switch moves to a position where it connects circuit M1 to ground circuit Z1, illuminating the lamp.

CHIME/BUZZER MODULE

The buzzer or optional chime module sounds an audible warning tone. The tone sounds for seat belt warning and when the ignition key is in the ignition switch while the drivers door is open. The tone also sounds when the ignition key is in the ON position while the drivers side seat belt is not buckled. Lastly, the tone sounds when the headlamps are ON when the ignition is OFF. Refer to Group 8U for system operation.

When the ignition switch is in the RUN or START position, circuit F87 from fuse 17 in the fuse block supplies power to the chime/buzzer module. Circuit A21 from the ignition switch supplies power to fuse 17.

Circuit L7 from fuse 15 in the fuse block also supplies power to the chime/buzzer module. Circuit A3 from fuse 5 in the Power Distribution Center (PDC) powers fuse 15.

When the parking lamps or headlamps are ON, the headlamp switch connects circuit G26 with the drivers side door jamb switch. Circuit G26 also connects to the key-in switch. Circuit M11 connects the key-in switch to the chime/buzzer module and the headlamp switch.

If the headlamps are ON, and the drivers door opens, ground for the chime/buzzer is on circuit C26 from the headlamp switch through the door jamb switch to circuit Z1.

If the headlamps are OFF with the key in the ignition while the drivers side door is open, ground for the chime/buzzer is supplied through the key-in switch. The ground path is over circuit M11, through the closed key-in switch to circuit C26. From circuit C26, the ground path continues through the drivers door jamb switch to circuit Z1.

Circuit G11 from the buzzer powers the seat belt warning lamp in the instrument cluster. Circuit Z1 at the instrument cluster provides ground for the lamp.

Circuit G10 from the buzzer connects to the seat belt switch. When the seat belt switch closes a path to ground is completed on circuit Z1 and the tone sounds momentarily.

Circuit Z1 also grounds the chime\buzzer module.

HELPFUL INFORMATION

Circuit F87 also powers the instrument cluster and the headlamp delay module.

DIAGRAM INDEX

Component	Page
Cargo Lamp	8W-44-6
Chime/Buzzer Module	8W-44-3
Courtesy Lamps	8W-44-5
Dome Lamp	8W-44-7
Door Jamb Switches	8W-44-10
Fuse 3 (PDC)	8W-44-4, 6
Fuse 5 (PDC)	8W-44-3, 8
Fuse 6 (PDC)	8W-44-3
Fuse 9 (Fuse Block)	8W-44-4, 6
Fuse 15 (Fuse Block)	8W-44-3, 8
Fuse 16 (PDC)	8W-44-4, 6
Fuse 17 (Fuse Block)	8W-44-3
Fuse 19 (Fuse Block)	8W-44-8
Glove Box Lamp and Switch	8W-44-5
Headlamp Switch	8W-44-3, 4, 5, 8
Headlamp Delay Module	8W-44-4
Headlamp Delay Relay	8W-44-3
Ignition Switch	8W-44-3
Instrument Cluster	8W-44-3
Instrument Panel Illumination Lamps	8W-44-8, 9
Intermittent Wiper Control Module	8W-44-4
Key-In Switch	8W-44-4
Liftgate Switch	8W-44-6
Reading Lamps	8W-44-7
Remote Keyless Entry Module	8W-44-7
Seat Belt Switch	8W-44-3
Telltale Connector (Instrument Cluster)	8W-44-3
Time Delay Relay	8W-44-4
Underhood Lamp	8W-44-4
Vanity Lamps	8W-44-7

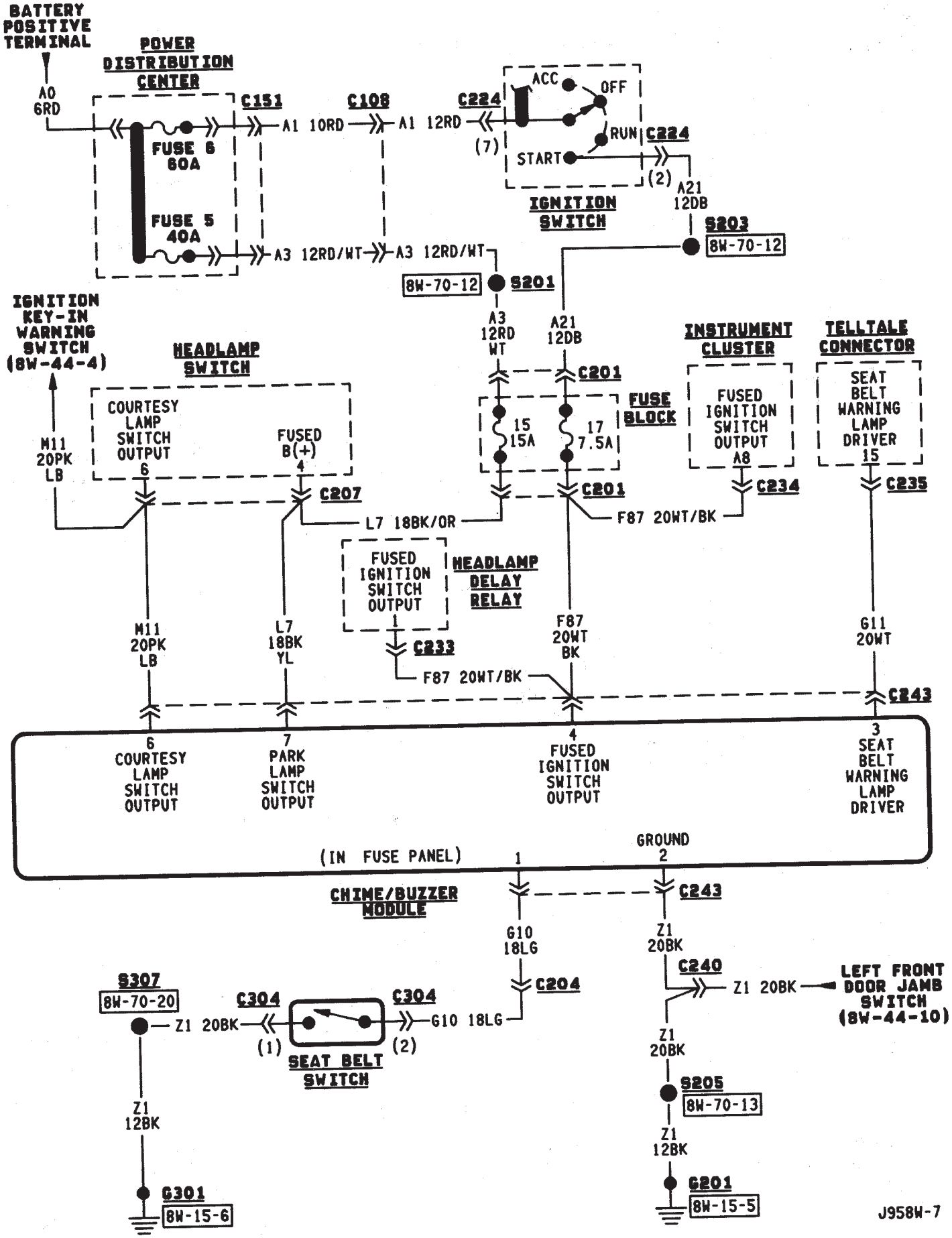
BATTERY POSITIVE TERMINAL
A0 6RD
POWER DISTRIBUTION CENTER
C151
FUSE 6 60A
FUSE 5 40A
C108
A1 10RD
A1 12RD
C224
ACC
OFF
RUN
START
(7)
(2)
C224
A21 12DB
IGNITION SWITCH
S203
8W-70-12
A3 12RD/WT
A3 12RD/WT
8W-70-12
S201
IGNITION KEY-IN WARNING SWITCH (8W-44-4)
HEADLAMP SWITCH
COURTESY LAMP SWITCH OUTPUT
6
FUSED B(+)
4
M11 20PK LB
C207
L7 18BK/OR
A3 12RD WT
A21 12DB
C201
FUSE BLOCK
15 15A
17 7.5A
C201
F87 20WT/BK
INSTRUMENT CLUSTER
FUSED IGNITION SWITCH OUTPUT
A8
C234
TELLTALE CONNECTOR
SEAT BELT WARNING LAMP DRIVER
15
C235
FUSED IGNITION SWITCH OUTPUT
1
C233
HEADLAMP DELAY RELAY
F87 20WT/BK
M11 20PK LB
L7 18BK YL
F87 20WT BK
G11 20WT
C243
6 COURTESY LAMP SWITCH OUTPUT
7 PARK LAMP SWITCH OUTPUT
4 FUSED IGNITION SWITCH OUTPUT
3 SEAT BELT WARNING LAMP DRIVER
(IN FUSE PANEL)
1
GROUND
2
CHIME/BUZZER MODULE
C243
G10 18LG
C204
Z1 20BK
C240
Z1 20BK
LEFT FRONT DOOR JAMB SWITCH (8W-44-10)
S307
8W-70-20
Z1 20BK
C304
(1)
SEAT BELT SWITCH
C304
(2)
G10 18LG
Z1 20BK
S205
8W-70-13
Z1 12BK
Z1 12BK
G301
8W-15-6
G201
8W-15-5
J958W-7

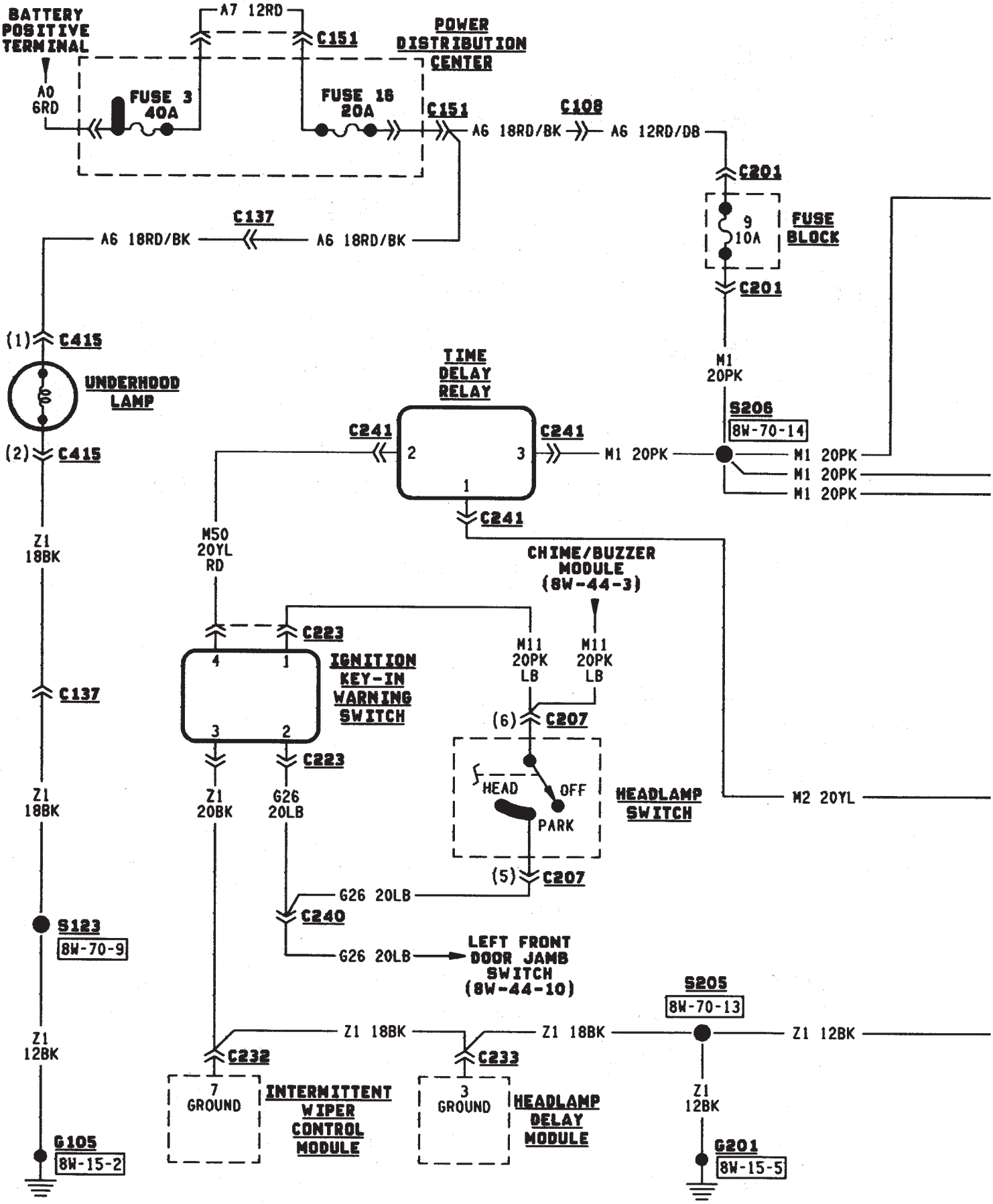
BATTERY POSITIVE TERMINAL
A0 6RD
A7 12RD
C151
POWER DISTRIBUTION CENTER
FUSE 3 40A
FUSE 16 20A
C151
C108
A6 18RD/BK
A6 12RD/DB
C201
9 10A
FUSE BLOCK
C201
C137
A6 18RD/BK
A6 18RD/BK
(1) C415
UNDERHOOD LAMP
(2) C415
TIME DELAY RELAY
C241
2
3
1
C241
M1 20PK
M1 20PK
M1 20PK
M1 20PK
S206
8W-70-14
C241
M2 20YL
Z1 18BK
M50 20YL RD
CHIME/BUZZER MODULE (8W-44-3)
C223
4
1
IGNITION KEY-IN WARNING SWITCH
3
2
C223
M11 20PK LB
M11 20PK LB
(6) C207
C137
Z1 18BK
Z1 20BK
G26 20LB
HEAD
OFF
PARK
HEADLAMP SWITCH
(5) C207
G26 20LB
C240
G26 20LB
LEFT FRONT DOOR JAMB SWITCH (8W-44-10)
S123
8W-70-9
S205
8W-70-13
Z1 18BK
Z1 18BK
Z1 12BK
Z1 12BK
C232
C233
7 GROUND
INTERMITTENT WIPER CONTROL MODULE
3 GROUND
HEADLAMP DELAY MODULE
Z1 12BK
G105
8W-15-2
G201
8W-15-5
J958W-7

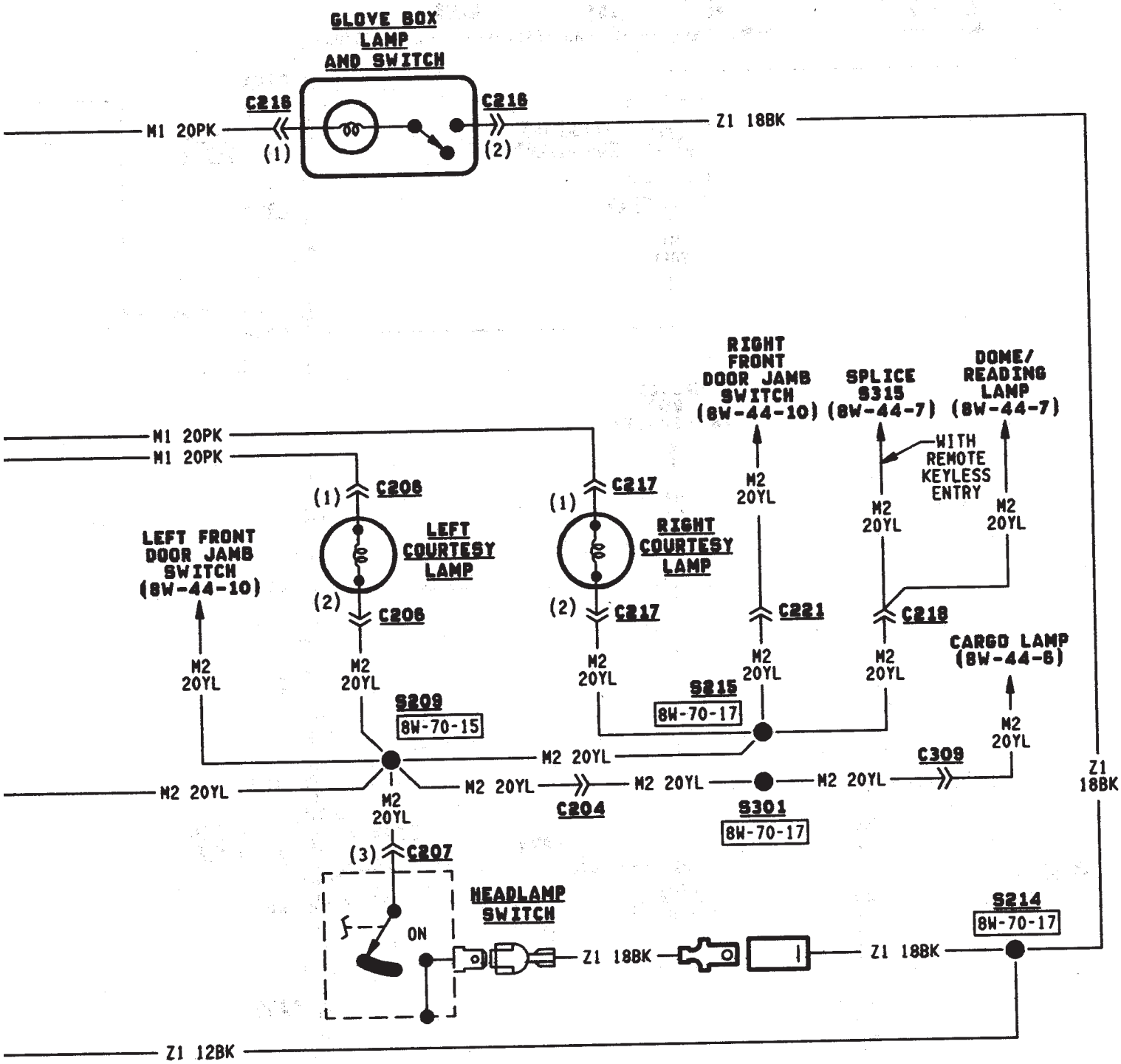
GLOVE BOX LAMP AND SWITCH
C216
C216
M1 20PK
(1)
(2)
Z1 18BK
RIGHT FRONT DOOR JAMB SWITCH (8W-44-10)
SPLICE S315 (8W-44-7)
DOME/ READING LAMP (8W-44-7)
M1 20PK
M1 20PK
WITH REMOTE KEYLESS ENTRY
M2 20YL
M2 20YL
M2 20YL
(1)
C206
(1)
C217
LEFT FRONT DOOR JAMB SWITCH (8W-44-10)
LEFT COURTESY LAMP
RIGHT COURTESY LAMP
(2)
C206
(2)
C217
C221
C218
CARGO LAMP (8W-44-6)
M2 20YL
M2 20YL
M2 20YL
M2 20YL
M2 20YL
S209
8W-70-15
S215
8W-70-17
M2 20YL
C309
M2 20YL
M2 20YL
M2 20YL
M2 20YL
M2 20YL
M2 20YL
C204
S301
8W-70-17
Z1 18BK
(3)
C207
HEADLAMP SWITCH
ON
Z1 18BK
Z1 18BK
S214
8W-70-17
Z1 12BK

J958W-7

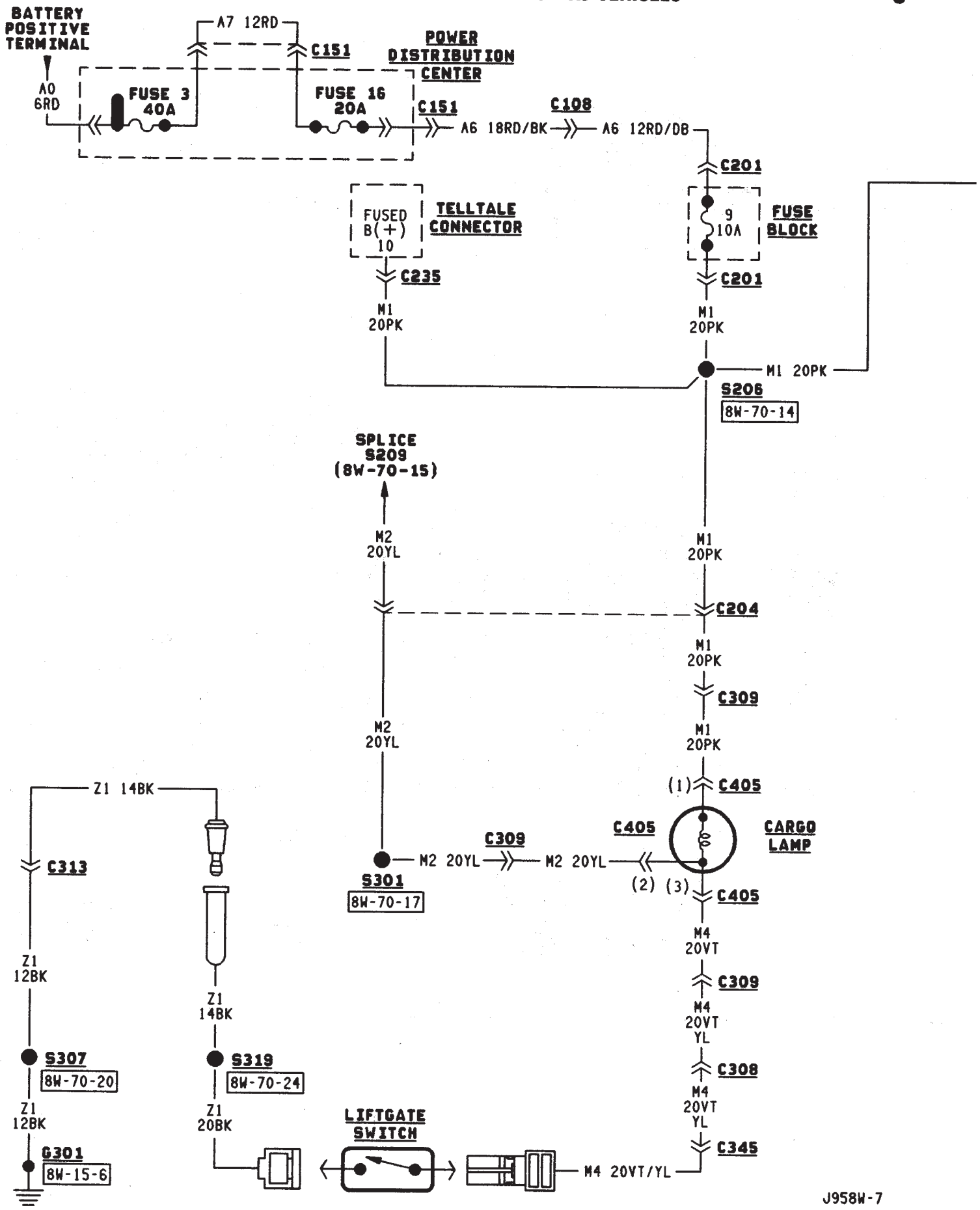
BATTERY POSITIVE TERMINAL
A0 6RD
FUSE 3 40A
A7 12RD
C151
POWER DISTRIBUTION CENTER
FUSE 16 20A
C151
A6 18RD/BK
C108
A6 12RD/DB
C201
FUSED B(+) 10
TELLTALE CONNECTOR
C235
M1 20PK
9 10A
FUSE BLOCK
C201
M1 20PK
M1 20PK
S206
8W-70-14
SPLICE S209 (8W-70-15)
M2 20YL
M1 20PK
C204
M1 20PK
C309
M2 20YL
M1 20PK
(1) C405
C405
CARGO LAMP
C309
M2 20YL
M2 20YL
S301
8W-70-17
(2) (3) C405
M4 20VT
C309
M4 20VT YL
C308
M4 20VT YL
C345
Z1 14BK
C313
Z1 12BK
S307
8W-70-20
Z1 12BK
G301
8W-15-6
Z1 14BK
S319
8W-70-24
Z1 20BK
LIFTGATE SWITCH
M4 20VT/YL
J958W-7

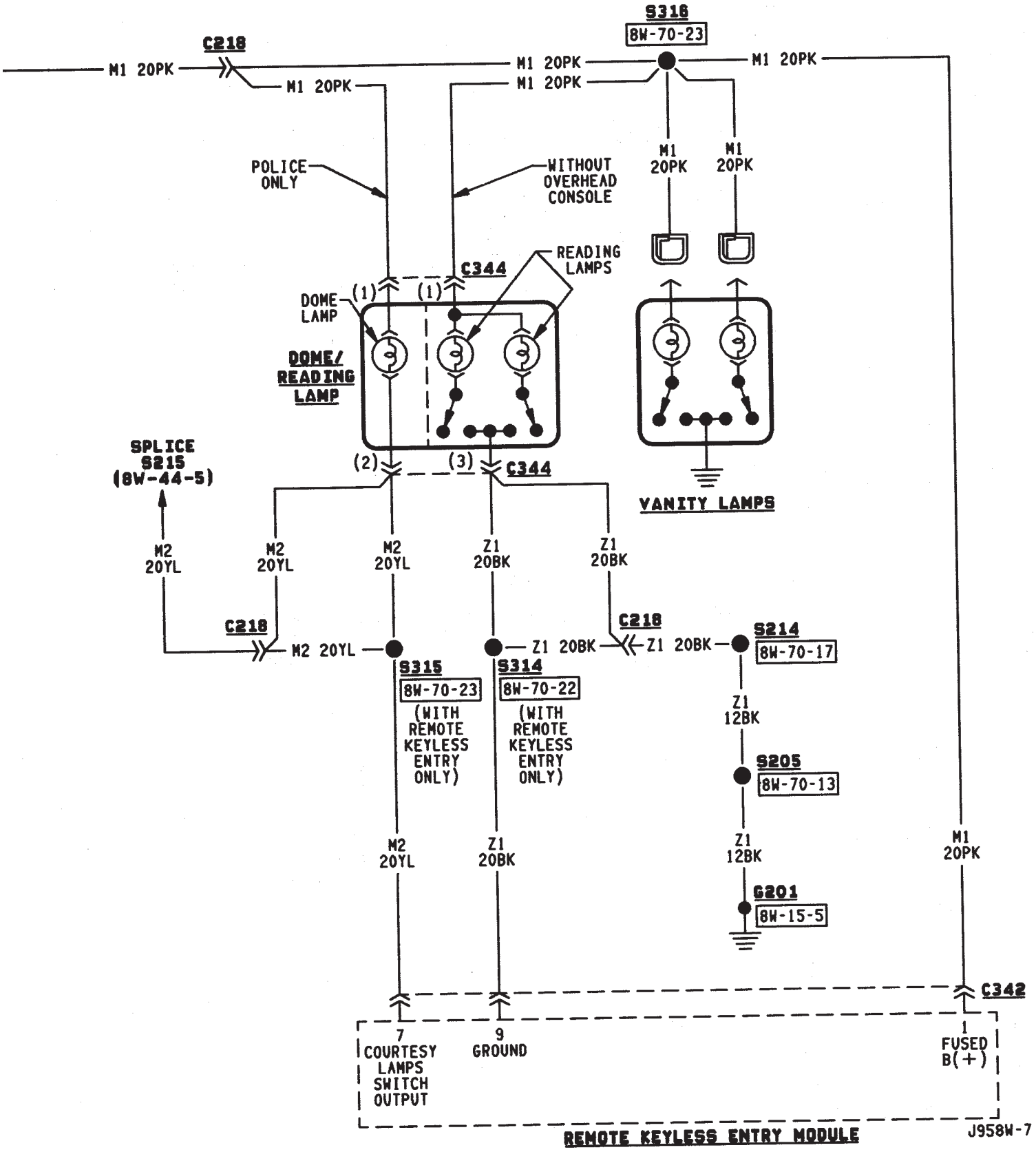
S316
8W-70-23
C218
M1 20PK
M1 20PK
M1 20PK
M1 20PK
M1 20PK
M1 20PK
M1 20PK
POLICE ONLY
WITHOUT OVERHEAD CONSOLE
READING LAMPS
C344
DOME LAMP
(1)
(1)
DOME/ READING LAMP
VANITY LAMPS
SPLICE S215 (8W-44-5)
(2)
(3)
C344
M2 20YL
M2 20YL
M2 20YL
Z1 20BK
Z1 20BK
C218
C218
S214
8W-70-17
M2 20YL
Z1 20BK
Z1 20BK
S315
8W-70-23
(WITH REMOTE KEYLESS ENTRY ONLY)
S314
8W-70-22
(WITH REMOTE KEYLESS ENTRY ONLY)
Z1 12BK
S205
8W-70-13
M2 20YL
Z1 20BK
Z1 12BK
M1 20PK
G201
8W-15-5
C342
7
COURTESY LAMPS SWITCH OUTPUT
9
GROUND
1
FUSED B(+)
REMOTE KEYLESS ENTRY MODULE
J958W-7

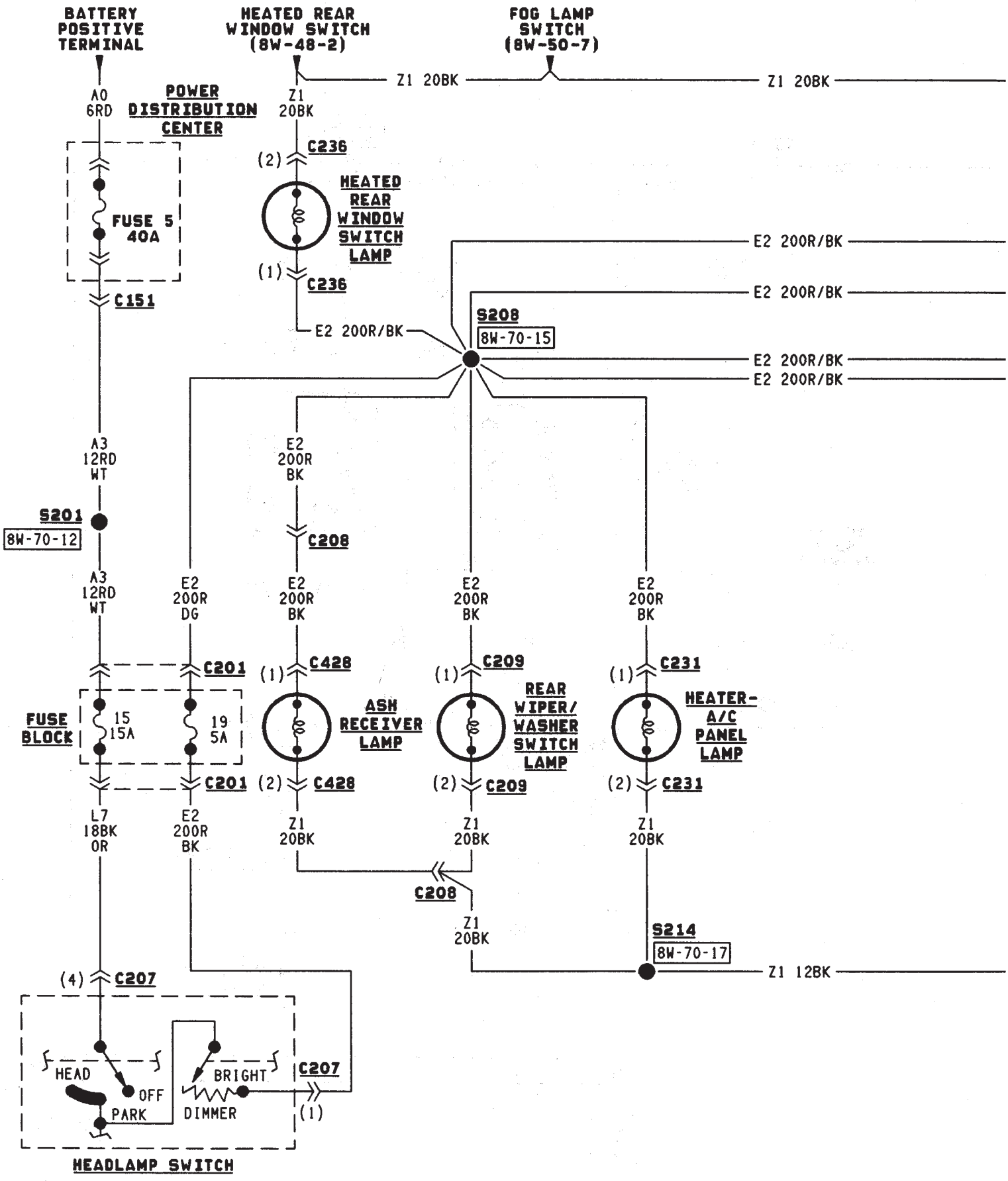
BATTERY POSITIVE TERMINAL
HEATED REAR WINDOW SWITCH (8W-48-2)
FOG LAMP SWITCH (8W-50-7)
Z1 20BK
Z1 20BK
A0 6RD
POWER DISTRIBUTION CENTER
Z1 20BK
(2) C236
HEATED REAR WINDOW SWITCH LAMP
FUSE 5 40A
(1) C236
E2 200R/BK
E2 200R/BK
C151
E2 200R/BK
S208
8W-70-15
E2 200R/BK
E2 200R/BK
A3 12RD WT
E2 200R BK
S201
8W-70-12
C208
A3 12RD WT
E2 200R DG
E2 200R BK
E2 200R BK
E2 200R BK
C201
(1) C428
(1) C209
(1) C231
FUSE BLOCK
15 15A
19 5A
ASH RECEIVER LAMP
REAR WIPER/ WASHER SWITCH LAMP
HEATER-A/C PANEL LAMP
C201
(2) C428
(2) C209
(2) C231
L7 18BK OR
E2 200R BK
Z1 20BK
Z1 20BK
Z1 20BK
C208
Z1 20BK
S214
8W-70-17
Z1 12BK
(4) C207
HEAD
OFF
PARK
BRIGHT
DIMMER
C207
(1)
HEADLAMP SWITCH

J958W-7

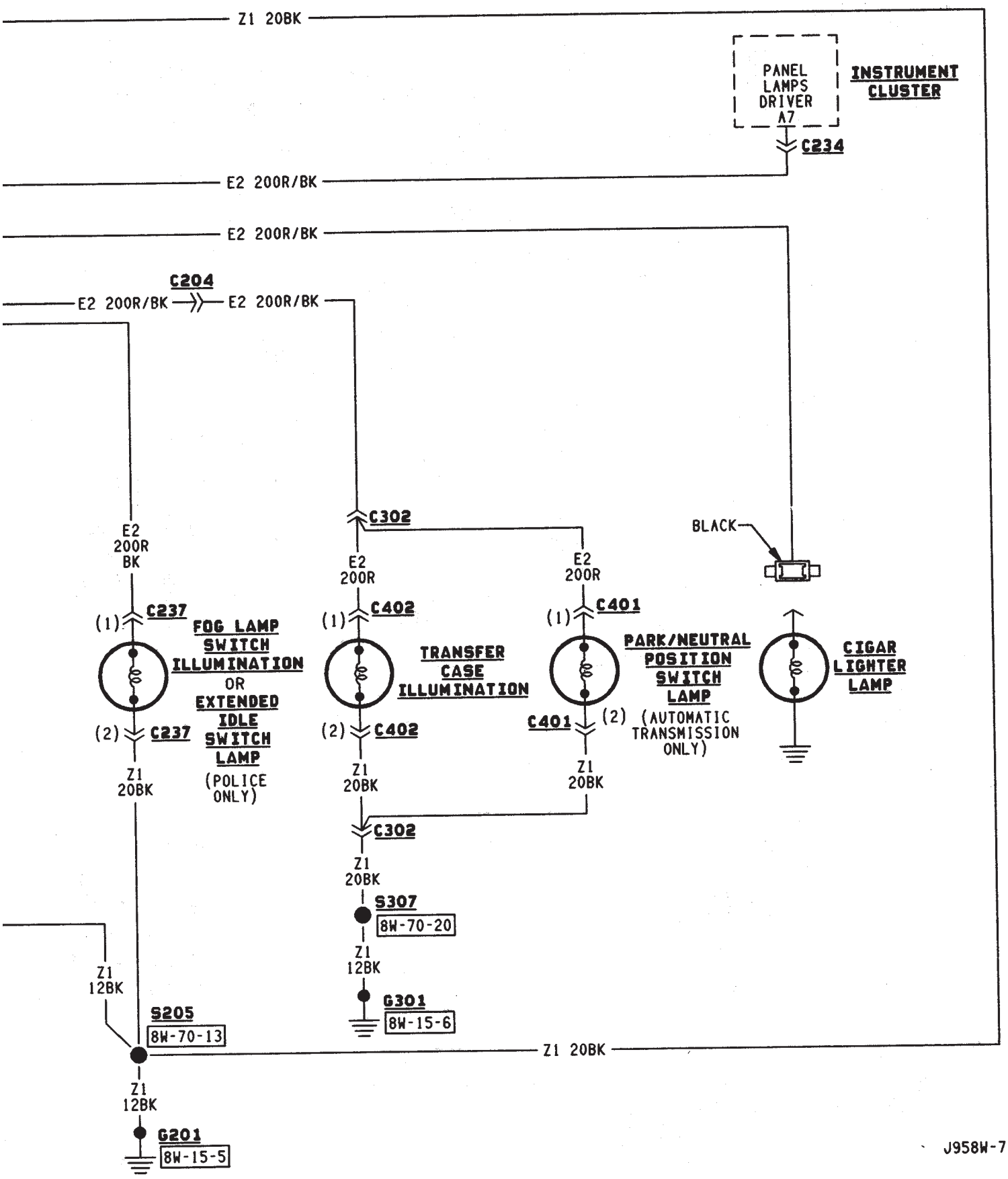
Z1 20BK
PANEL LAMPS DRIVER A7
INSTRUMENT CLUSTER
C234
E2 200R/BK
E2 200R/BK
C204
E2 200R/BK
E2 200R/BK
C302
BLACK
E2 200R BK
E2 200R
E2 200R
(1) C237
FOG LAMP SWITCH ILLUMINATION
OR
EXTENDED IDLE SWITCH LAMP
(POLICE ONLY)
(2) C237
Z1 20BK
(1) C402
TRANSFER CASE ILLUMINATION
(2) C402
Z1 20BK
(1) C401
PARK/NEUTRAL POSITION SWITCH LAMP
(AUTOMATIC TRANSMISSION ONLY)
C401 (2)
Z1 20BK
CIGAR LIGHTER LAMP
C302
Z1 20BK
S307
8W-70-20
Z1 12BK
G301
8W-15-6
Z1 12BK
S205
8W-70-13
Z1 20BK
Z1 12BK
G201
8W-15-5

J958W-7

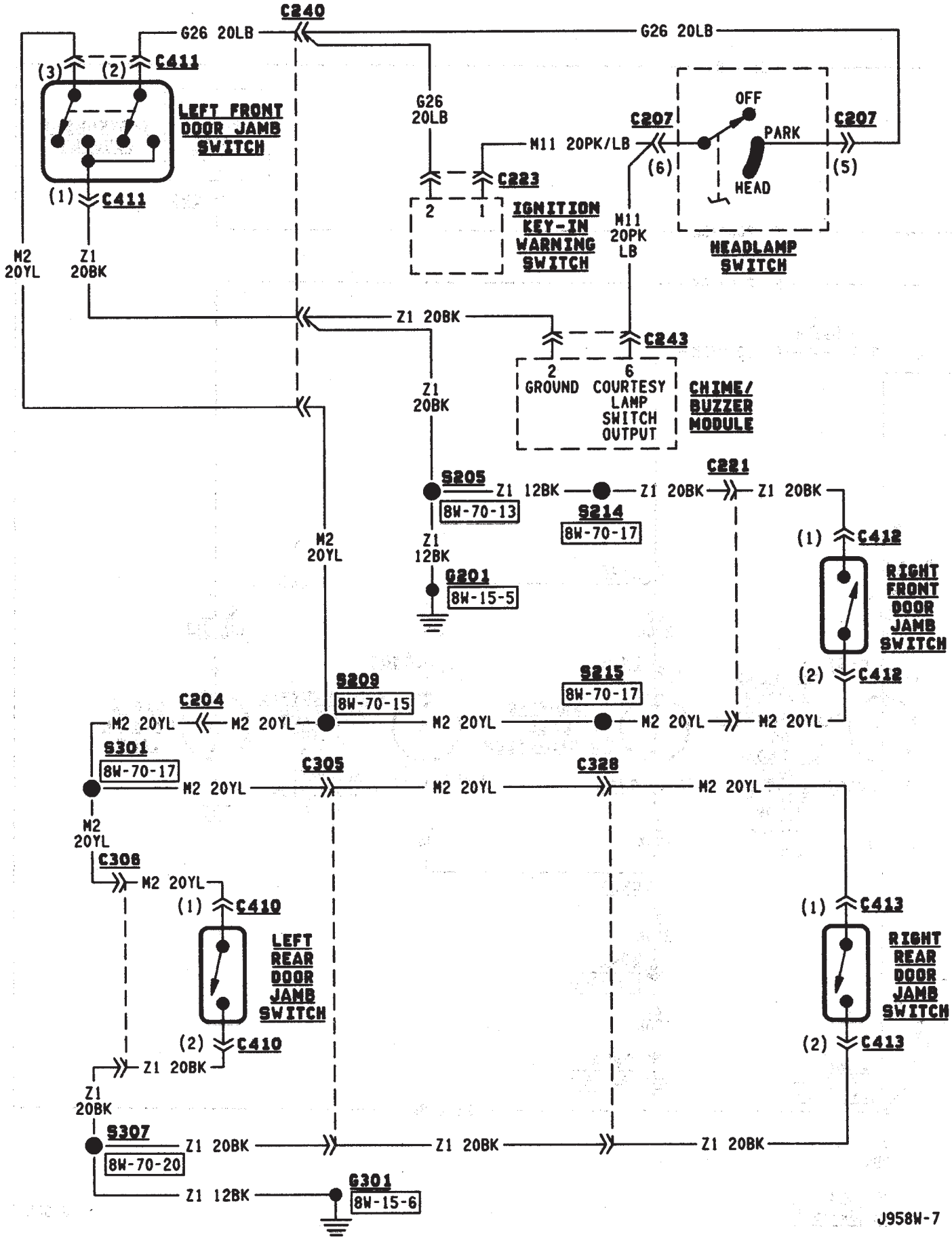
C240
G26 20LB
G26 20LB
(3)
(2)
C411
LEFT FRONT DOOR JAMB SWITCH
(1)
C411
G26 20LB
C223
2
1
IGNITION KEY-IN WARNING SWITCH
M11 20PK/LB
C207
(6)
OFF
PARK
HEAD
C207
(5)
HEADLAMP SWITCH
M11 20PK LB
M2 20YL
Z1 20BK
Z1 20BK
C243
2
GROUND
6
COURTESY LAMP SWITCH OUTPUT
CHIME/ BUZZER MODULE
Z1 20BK
S205
Z1 12BK
8W-70-13
Z1 20BK
S214
8W-70-17
C221
Z1 20BK
(1)
C412
RIGHT FRONT DOOR JAMB SWITCH
(2)
C412
M2 20YL
Z1 12BK
G201
8W-15-5
S209
8W-70-15
S215
8W-70-17
C204
M2 20YL
M2 20YL
M2 20YL
M2 20YL
M2 20YL
S301
8W-70-17
C305
C328
M2 20YL
M2 20YL
M2 20YL
M2 20YL
C308
M2 20YL
(1)
C410
LEFT REAR DOOR JAMB SWITCH
(2)
C410
(1)
C413
RIGHT REAR DOOR JAMB SWITCH
(2)
C413
Z1 20BK
Z1 20BK
S307
8W-70-20
Z1 20BK
Z1 20BK
Z1 20BK
Z1 12BK
G301
8W-15-6
J958W-7

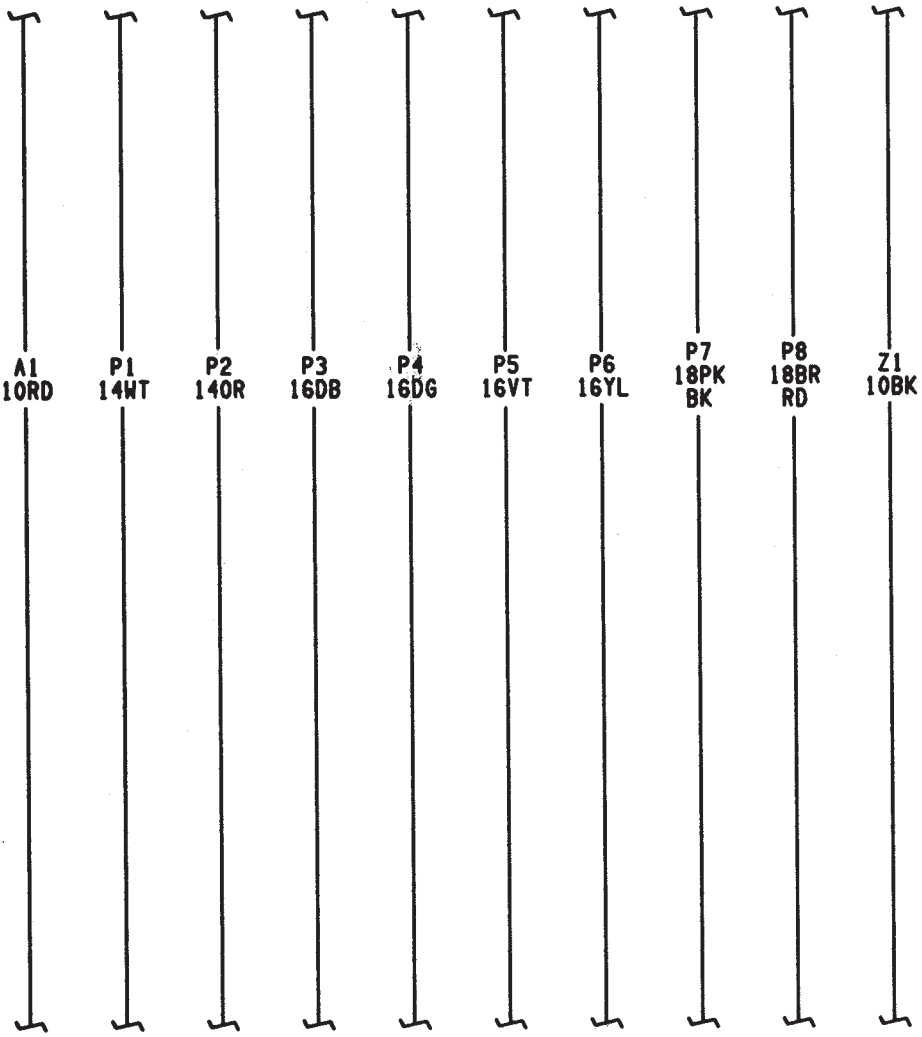

POLICE WIRING PROVISIONS
NO CONNECTIONS
NO TERMINALS
WIRES TAPED TO DOME LAMP HARNESS

AUDIO SYSTEM

RADIO

When the ignition switch is in the ACCESSORY or RUN position, it connects circuit A1 from fuse 6 in the Power Distribution Center (PDC) to circuit A48. Circuit A48 powers circuit F85 through fuse 2 in the fuse block. Circuit F85 powers the radio.

Circuit Z1 provides ground for the radio. The antenna connects to the rear of the radio.

RADIO MEMORY

Circuit M1 from the Ignition Off Draw (IOD) fuse (fuse 9) in the fuse block supplies power for the radio memory. The IOD fuse is removed during vehicle shipping to prevent excessive battery draw.

Circuit A6 from fuse 16 in the Power Distribution Center (PDC) supplies voltage to fuse 9. Circuit A7 from fuse 3 in the PDC powers circuit A6 through fuse 16. Circuits A6, A7 and M1 are HOT at all times.

RADIO ILLUMINATION

Circuit E2 supplies battery voltage to the radio illumination lamps when the headlamps or parking lamps are on and the dimmer switch is in the LOW or ON positions.

Circuit X5 supplies battery voltage for the radio clock and station frequency display. Circuit X5 originates at the radio illumination relay and is fed by either circuit F85 or circuit E2 depending on the switch position inside the relay.

When the headlamps and parking lamps are off, the radio illumination relay is in its normal At Rest position. In the At Rest position, the relay connects circuit F85 from fuse 2 in the fuse block to circuit X5.

When the headlamps or parking lamps are on, circuit L90 from the headlamp switch supplies battery voltage to the coil side of the radio illumination relay. Circuit Z1 provides ground for the coil side of the relay.

When voltage is present on circuit L90, the radio illumination relay switches from its At Rest position to connect circuit E2 to circuit X5.

SPEAKERS

There are 3 different radio packages. The standard radio package includes 2 speakers; one in each front door. The four speaker system uses speakers in each front door plus speakers in the rear sound bar. The six speaker system has the front door speakers, sound bar speakers and two speakers in the instrument panel.

BASE RADIO

Vehicles with the base radio have a jumper between the radio and the instrument panel connectors. The jumper simulates rear speaker load.

Circuit X53 feeds the speaker in the left front door. Circuit X55 is the return from the speaker to the radio.

Circuit X54 feeds the right front door speaker. Circuit X56 is the return from the speaker to the radio.

FOUR SPEAKER SYSTEM

Circuit X53 feeds the speaker in the left front door. Circuit X55 is the return from the speaker to the radio.

Circuit X54 feeds the right front door speaker. Circuit X56 is the return from the speaker to the radio.

Circuit X51 feeds the left rear speaker. Circuit X57 is the return from the speaker to the radio.

Circuit X52 feeds the right rear speaker. Circuit X58 is the return from the speaker to the radio.

SIX SPEAKER SYSTEM

Circuit X53 feeds the left speaker in the instrument panel. The X53 circuit is double crimped at the instrument panel left speaker and branches to the left front door speaker. Circuit X55 is the return to the radio from the instrument panel left speaker and left front door speaker. Circuit X55 is double crimped at the instrument panel left speaker.

Circuit X54 feeds the right speaker in the instrument panel. The X54 circuit is double crimped at the instrument panel right speaker and branches to the right front door speaker. Circuit X56 is the return to the radio from the instrument panel left speaker and left front door speaker. Circuit X56 is double crimped at the instrument panel left speaker.

Circuit X51 feeds the left rear speaker. Circuit X57 is the return from the speaker to the radio.

Circuit X52 feeds the right rear speaker. Circuit X58 is the return from the speaker to the radio.

DIAGRAM INDEX

Component	Page
Fuse Block	8W-47-2, 3
Headlamp Switch	8W-47-2
Ignition Switch	8W-47-2
LCD Relay	8W-47-3
Power Distribution Center	8W-47-2, 3
Radio	8W-47-2 thru 7
Speakers (Six Speaker System)	8W-47-4, 5
Speakers (Four Speaker System)	8W-47-6, 7

6 SPEAKER SYSTEM

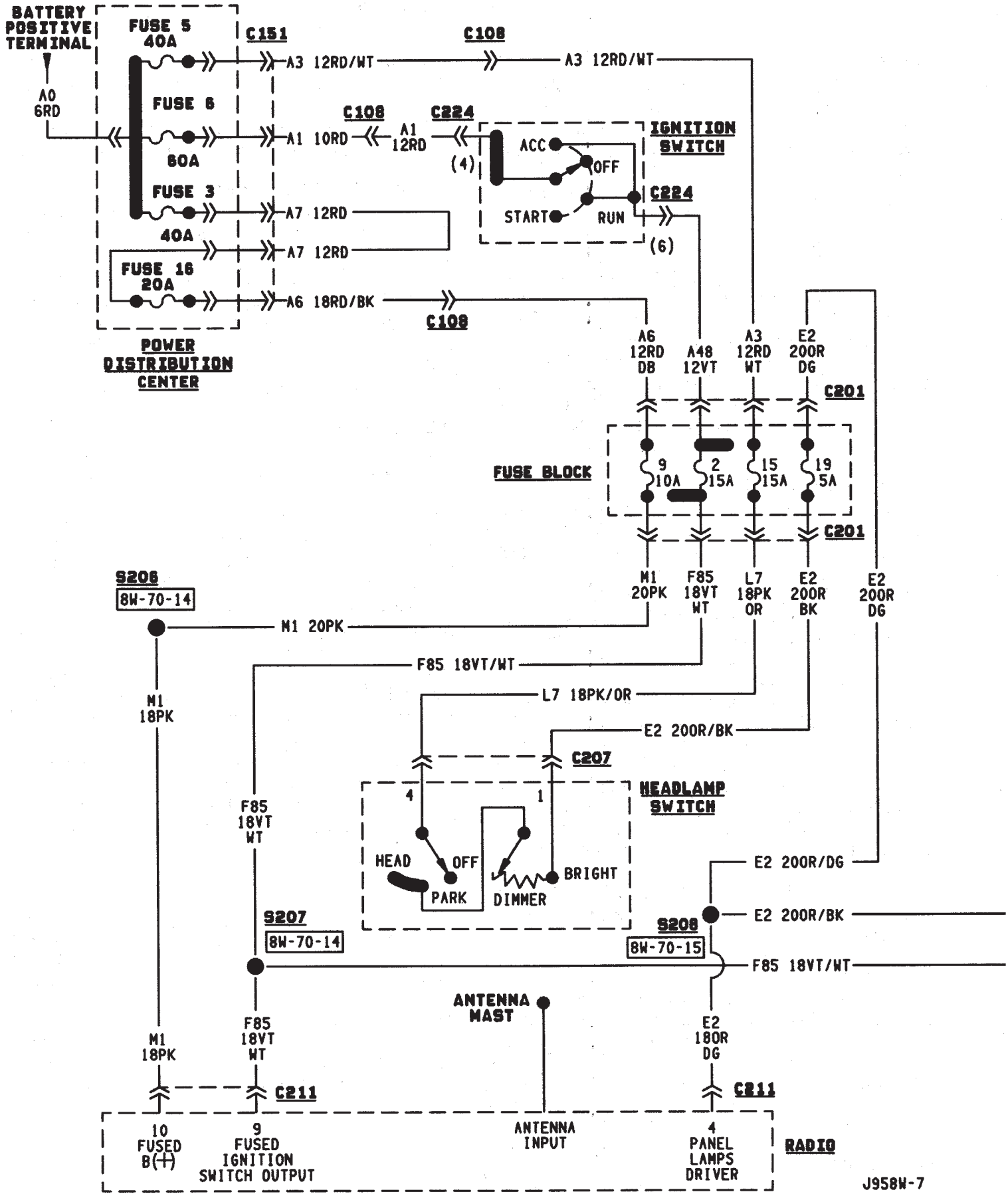

6 SPEAKER SYSTEM

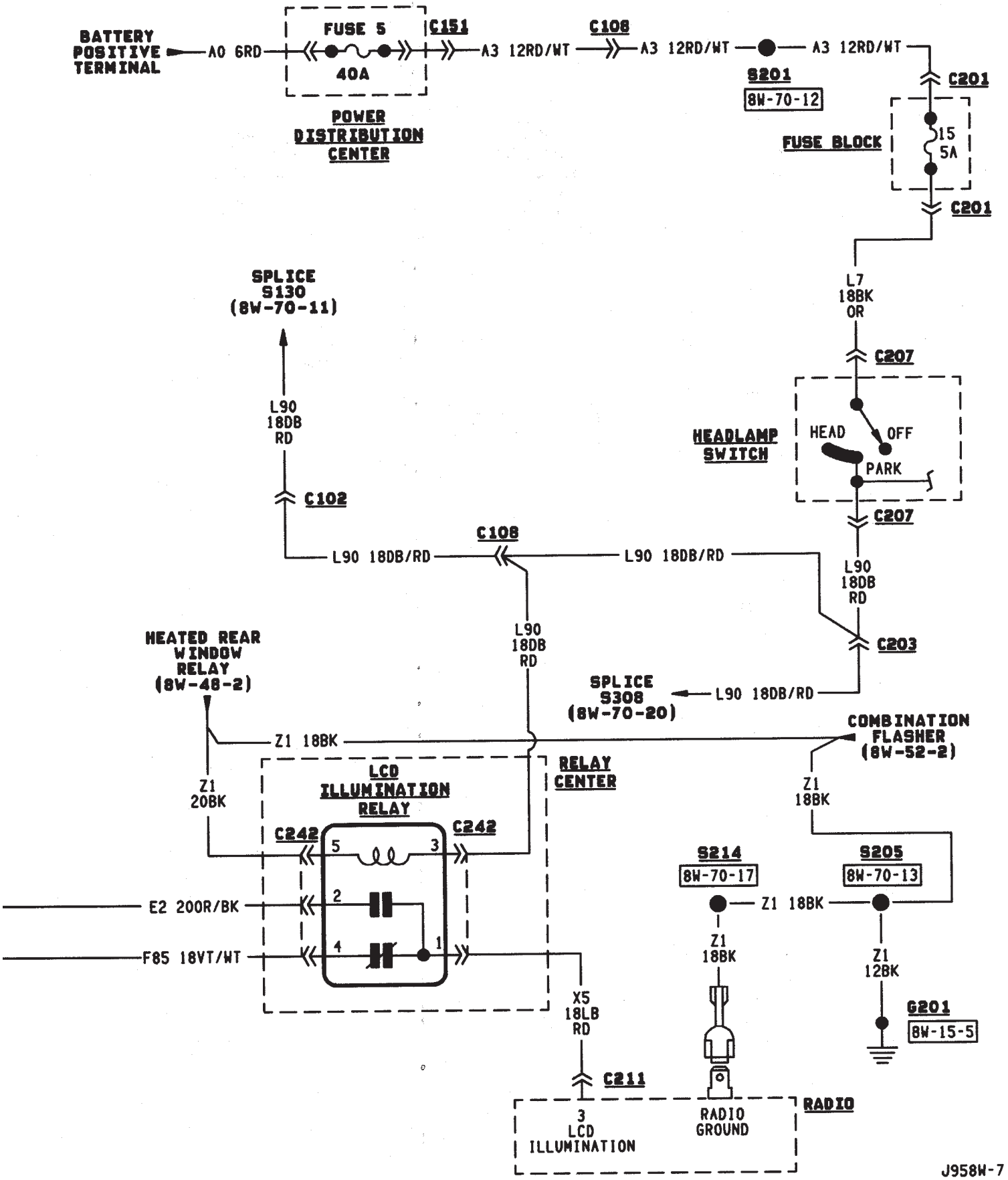

J958W-7

6 SPEAKER SYSTEM

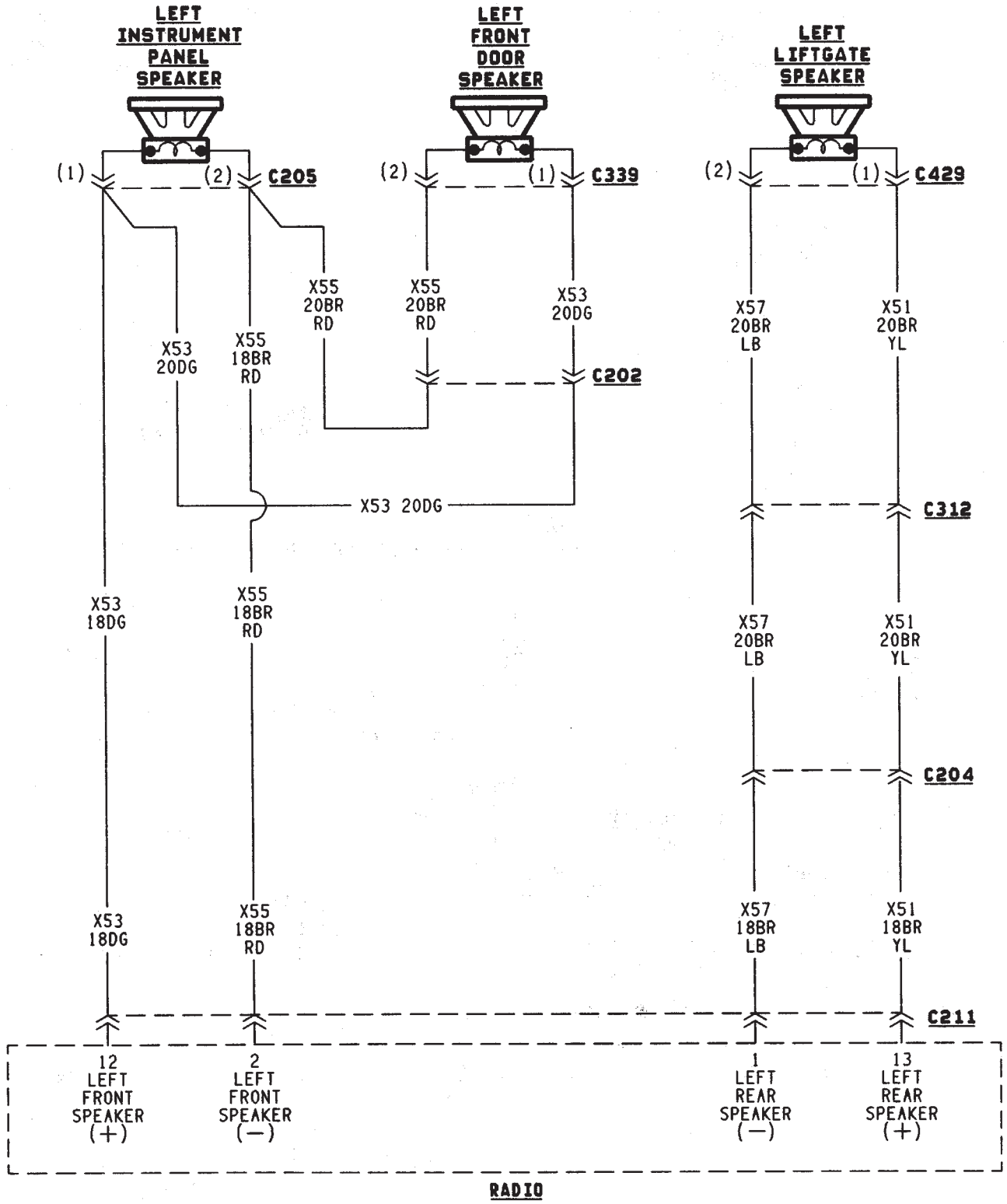

J958W-7

6 SPEAKER SYSTEM

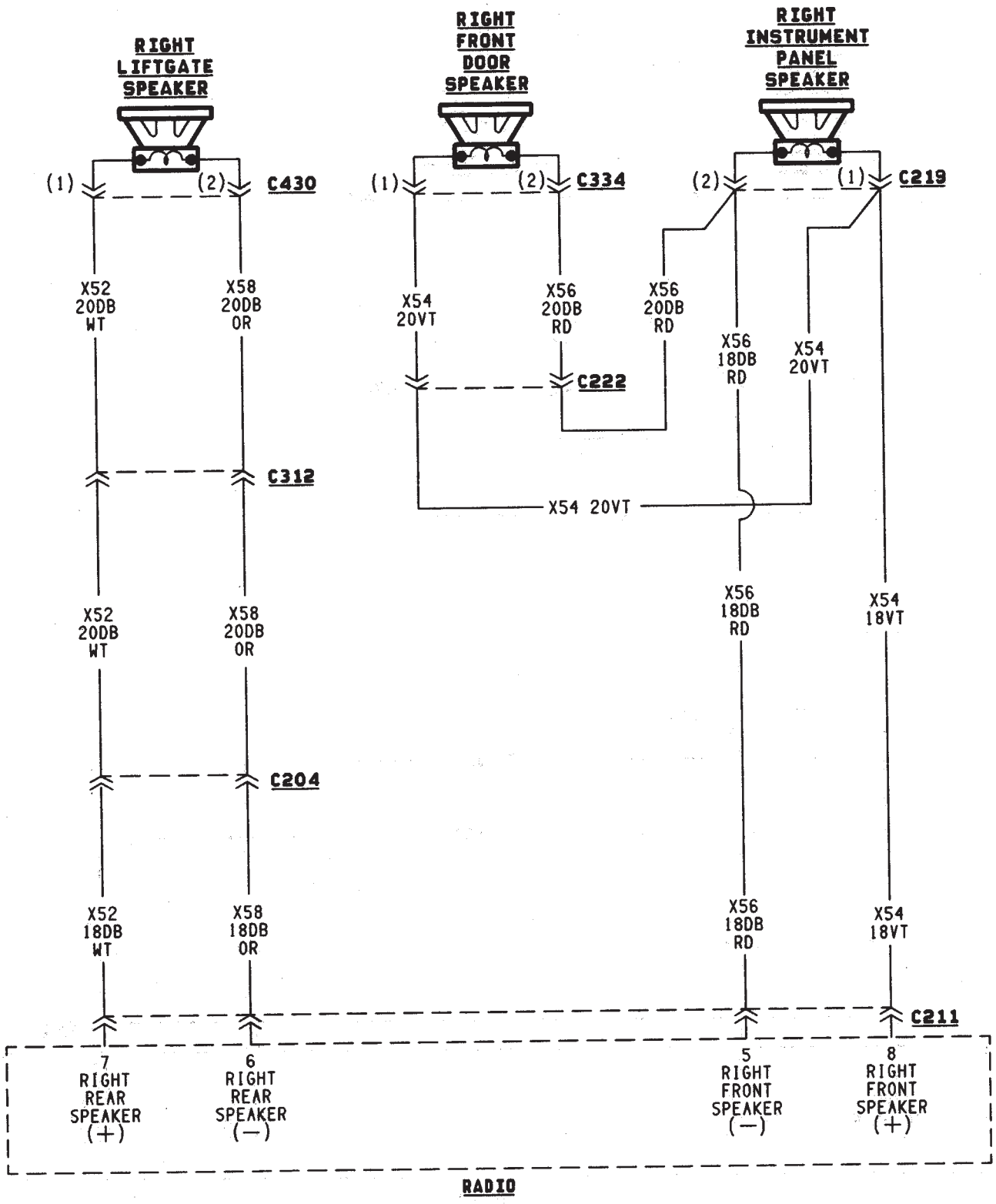

J958W-7

4 SPEAKER SYSTEM

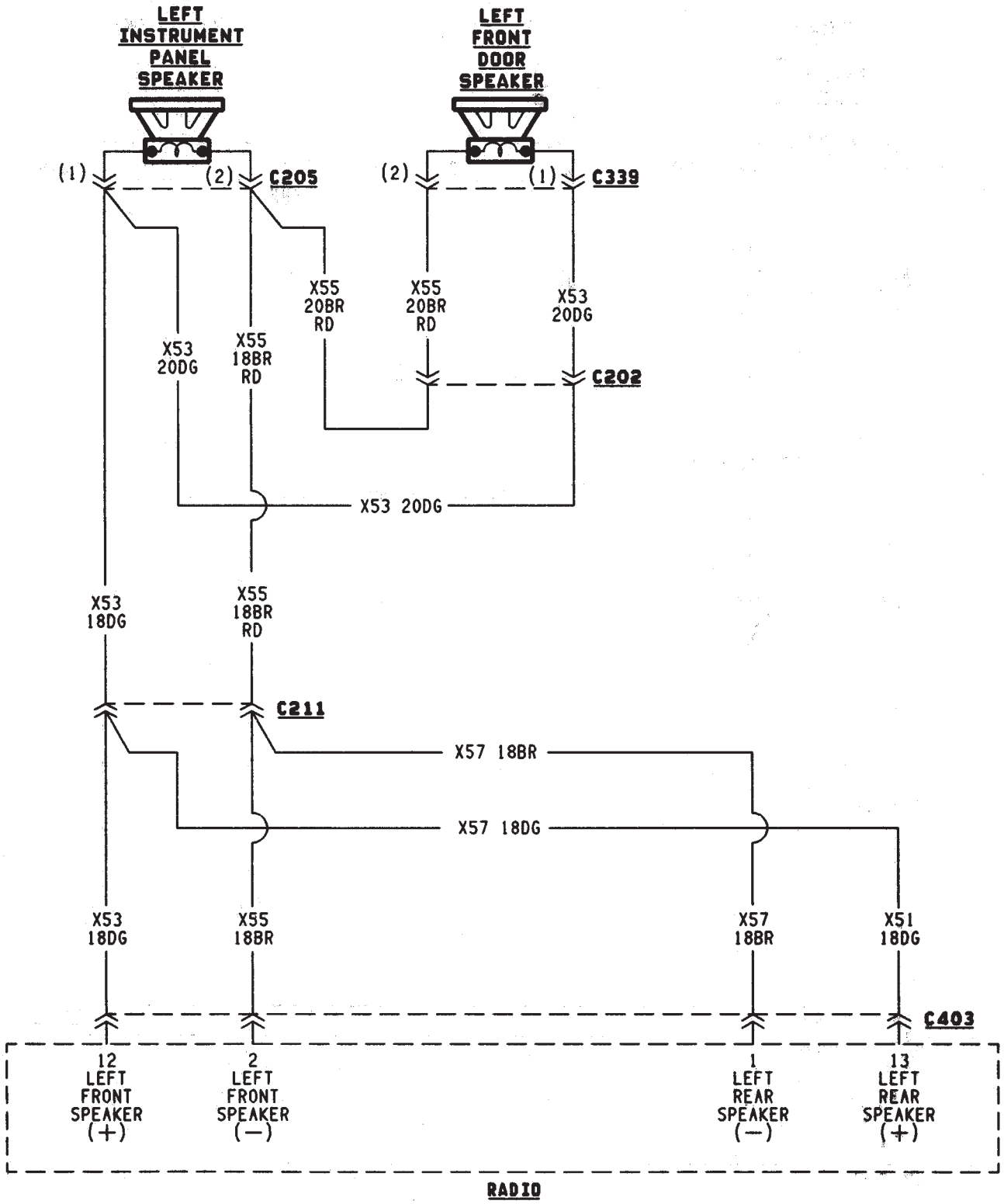

J958W-7

4 SPEAKER SYSTEM

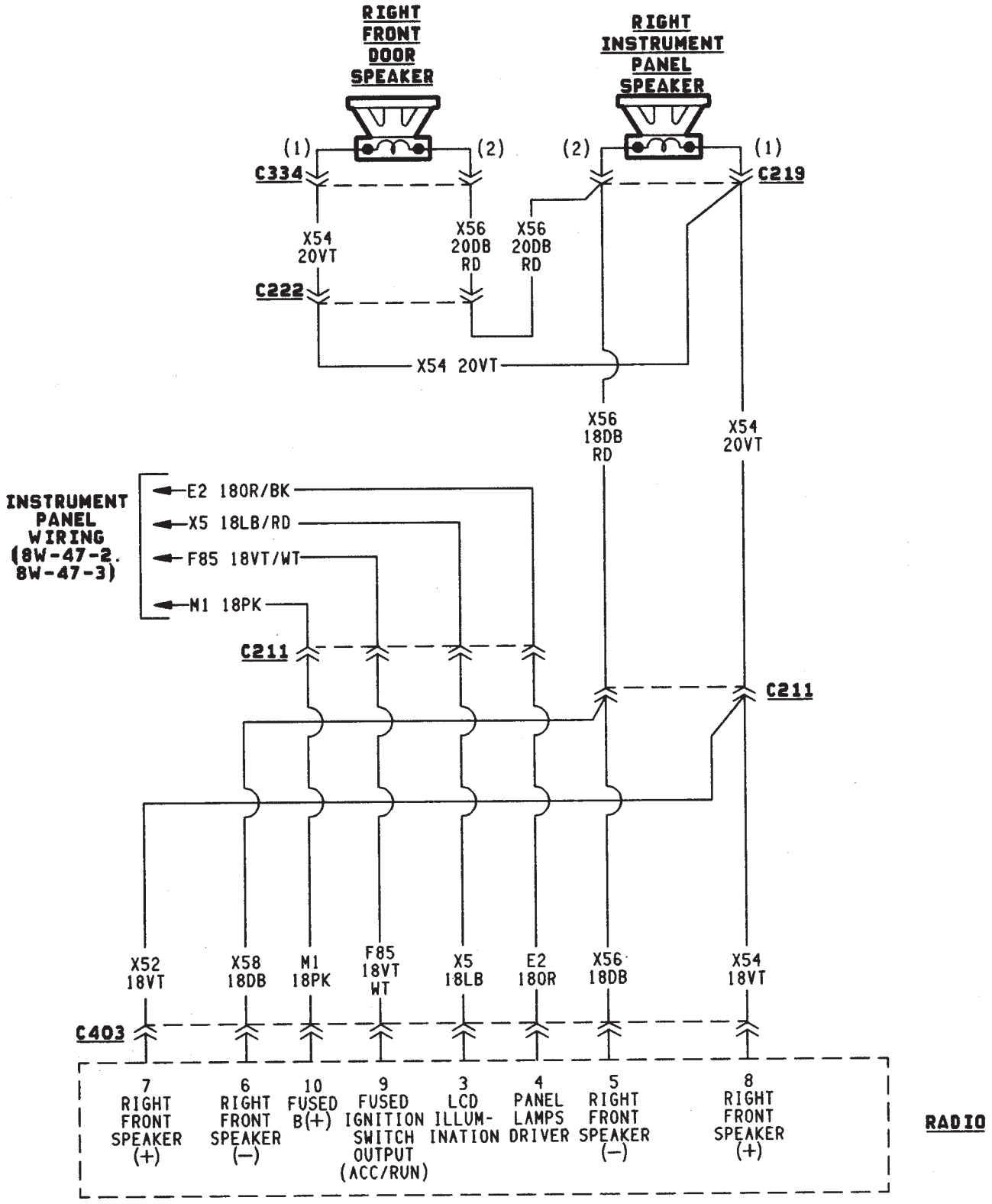

HEATED REAR WINDOW

HEATED REAR WINDOW

The heated rear window relay supplies power to heated rear window grid. Circuit F83 from fuse 8 in the fuse 8 in the fuse block supplies power to the heated rear window relay when the ignition switch is in the ACCESSORY or RUN positions.

When the operator depresses the heated rear window switch, the contacts inside the switch momentarily close and circuit C80 connects the switch to the relay. This causes the relay to change state and complete a circuit to energize the coil side of the relay and start the relay timer.

Circuit F81 from fuse 18 in the fuse block supplies voltage to the coil and contact sides of the relay. Circuit Z1 provides ground for the relay.

When the heated rear window relay energizes, the contacts inside the relay close and connect circuit F81 to circuit C15. Circuit C15 splices to the power the heated rear window grid and the indicator lamp in the heated rear window switch. Circuit Z1 provides ground for the heated rear window grid.

HELPFUL INFORMATION

- When the ignition switch is in the ACCESSORY or RUN positions, it connects circuit A1 from fuse 6 in the power distribution center (PDC) to circuit A48.
- Check for broken grid lines on the window.
- Check for a broken bus bar or disconnected leads at the rear window.
- Check for a good ground.

DIAGRAM INDEX

Component	Page
Fuse 6 (PDC)	8W-48-2
Fuse 7 (PDC)	8W-48-2
Fuse 8 (Fuse Block)	8W-48-2
Fuse 18 (Fuse Block)	8W-48-2
Ignition Switch	8W-48-2
Heated Rear Window Grid	8W-48-3
Heated Rear Window Relay	8W-48-2
Heated Rear Window Switch	8W-48-2

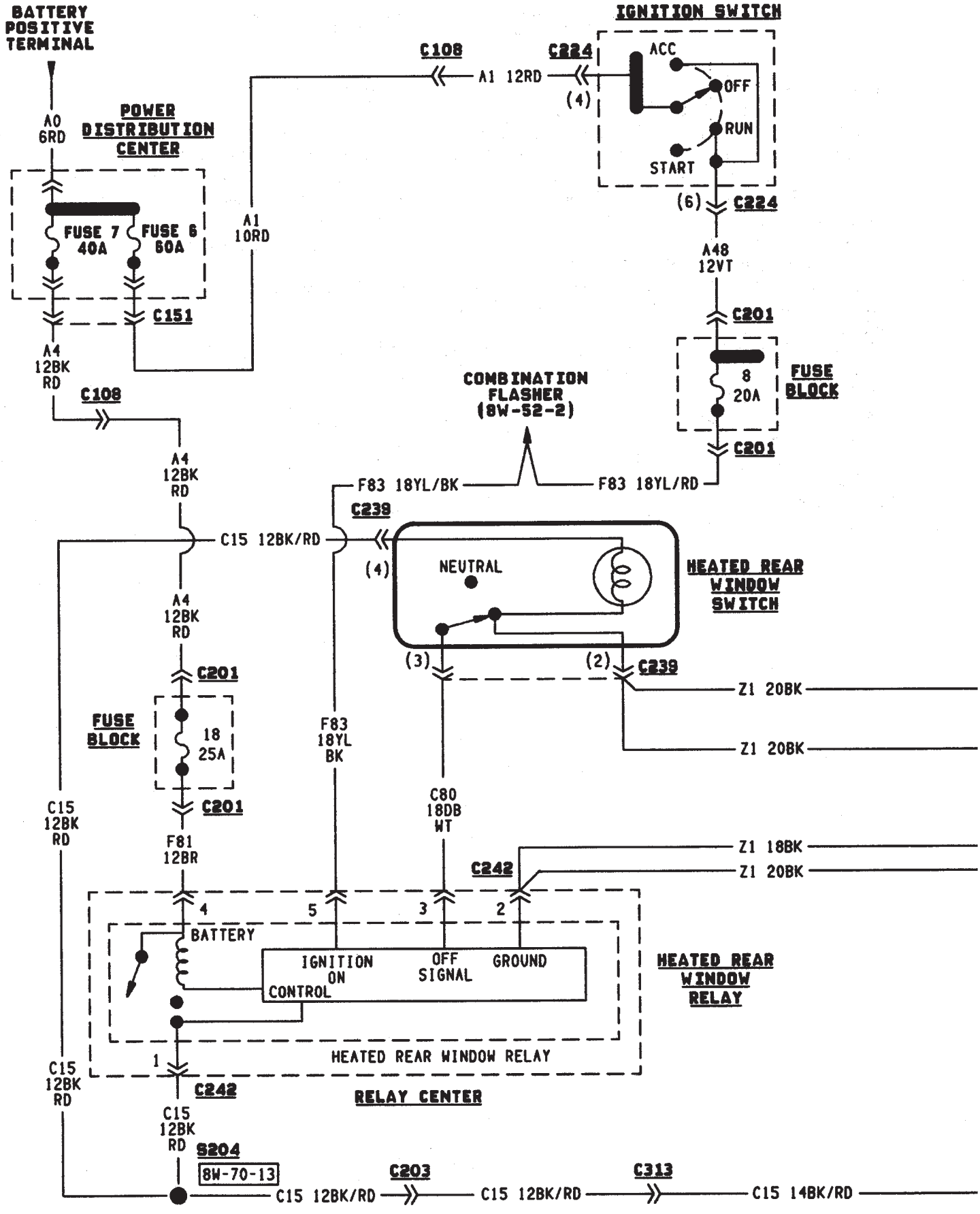
BATTERY POSITIVE TERMINAL
A0 6RD
POWER DISTRIBUTION CENTER
FUSE 7 40A
FUSE 6 60A
C151
A4 12BK RD
C108
A1 10RD
A1 12RD
C224
IGNITION SWITCH
ACC
OFF
RUN
START
(4)
(6)
C224
A48 12VT
C201
FUSE BLOCK
8 20A
C201
COMBINATION FLASHER (8W-52-2)
F83 18YL/BK
F83 18YL/RD
C108
A4 12BK RD
C15 12BK/RD
C239
(4)
NEUTRAL
HEATED REAR WINDOW SWITCH
(3)
(2)
C239
Z1 20BK
Z1 20BK
A4 12BK RD
C201
FUSE BLOCK
18 25A
C201
F81 12BR
C15 12BK RD
F83 18YL BK
C80 18DB WT
Z1 18BK
Z1 20BK
C242
4
5
3
2
BATTERY
IGNITION ON CONTROL
OFF SIGNAL
GROUND
HEATED REAR WINDOW RELAY
HEATED REAR WINDOW RELAY
1
C242
RELAY CENTER
C15 12BK RD
C15 12BK RD
S204
8W-70-13
C203
C313
C15 12BK/RD
C15 12BK/RD
C15 14BK/RD
J958W-7

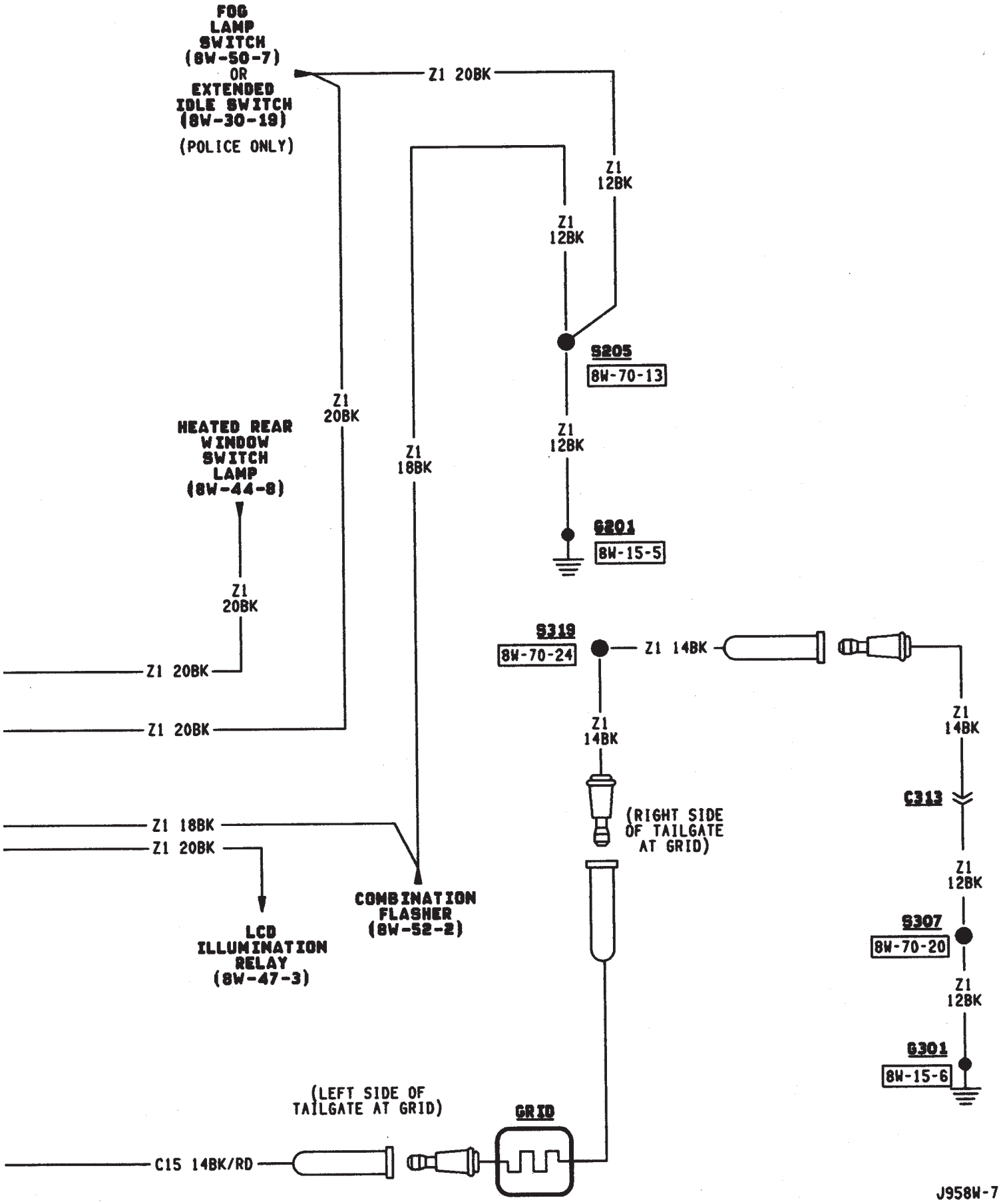
FOG LAMP SWITCH (8W-50-7) OR EXTENDED IDLE SWITCH (8W-30-19) (POLICE ONLY)
Z1 20BK
Z1 12BK
Z1 12BK
G205
8W-70-13
Z1 20BK
Z1 18BK
HEATED REAR WINDOW SWITCH LAMP (8W-44-8)
Z1 12BK
G201
8W-15-5
Z1 20BK
Z1 20BK
Z1 20BK
S319
8W-70-24
Z1 14BK
Z1 14BK
Z1 14BK
C313
(RIGHT SIDE OF TAILGATE AT GRID)
Z1 18BK
Z1 20BK
Z1 12BK
S307
8W-70-20
Z1 12BK
G301
8W-15-6
LCD ILLUMINATION RELAY (8W-47-3)
COMBINATION FLASHER (8W-52-2)
(LEFT SIDE OF TAILGATE AT GRID)
GRID
C15 14BK/RD
J958W-7

OVERHEAD CONSOLE

OVERHEAD CONSOLE

When the ignition switch is in the START or RUN position, it connects circuit A1 from fuse 6 in the Power Distribution Center (PDC) to circuit A21. Circuit A21 supplies power to circuit F87 through fuse 17 in the fuse block. Circuit F87 supplies power to the overhead console.

When the headlamps or parking lamps are ON, circuits L90 and E2 provide voltage to the overhead console for illumination. Voltage on circuit L90 informs the overhead console that the headlamps or parking lamps are ON. Circuit E2 from fuse 19 in the fuse block powers the illumination lamps in the overhead console. Circuit E2 originates at the headlamp switch.

Circuits Z1 and Z2 provides ground for the overhead console. From circuit M2, the overhead console senses when one of the door jamb switches opens.

AMBIENT TEMPERATURE SENSOR

The ambient temperature sensor is a variable resistor. Circuit G31 supplies voltage from the overhead console to the sensor. Circuit G32 is the signal return from the sensor to the overhead console.

LAMPS

Circuit M1 supplies voltage for the case grounded reading lamps in the overhead console. The ignition off draw (IOD) fuse (fuse 9) in the fuse block supplies voltage to circuit M1. Circuit A6 from fuse 16 in PDC feeds the IOD fuse. Circuit A7 from fuse 3 in the PDC supplies voltage to fuse 1 in the PDC.

DIAGRAM INDEX

Component	Page
Ambient Temperature Sensor	8W-49-4
Chime/Buzzer Module	8W-49-2
Fuse 1 (PDC)	8W-49-2
Fuse 3 (PDC)	8W-49-2
Fuse 5 (PDC)	8W-49-2
Fuse 9 (Fuse Block)	8W-49-2
Fuse 15 (Fuse Block)	8W-49-3
Fuse 16 (PDC)	8W-49-2
Fuse 17 (Fuse Block)	8W-49-2
Fuse 19 (Fuse Block)	8W-49-3
Headlamp Delay Module	8W-49-2
Headlamp Switch	8W-49-3
Ignition Switch	8W-49-2
Instrument Cluster	8W-49-4
Overhead Console	8W-49-3, 4
Overhead Console	8W-49-2
Telltale Connector (Instrument Cluster)	8W-49-2

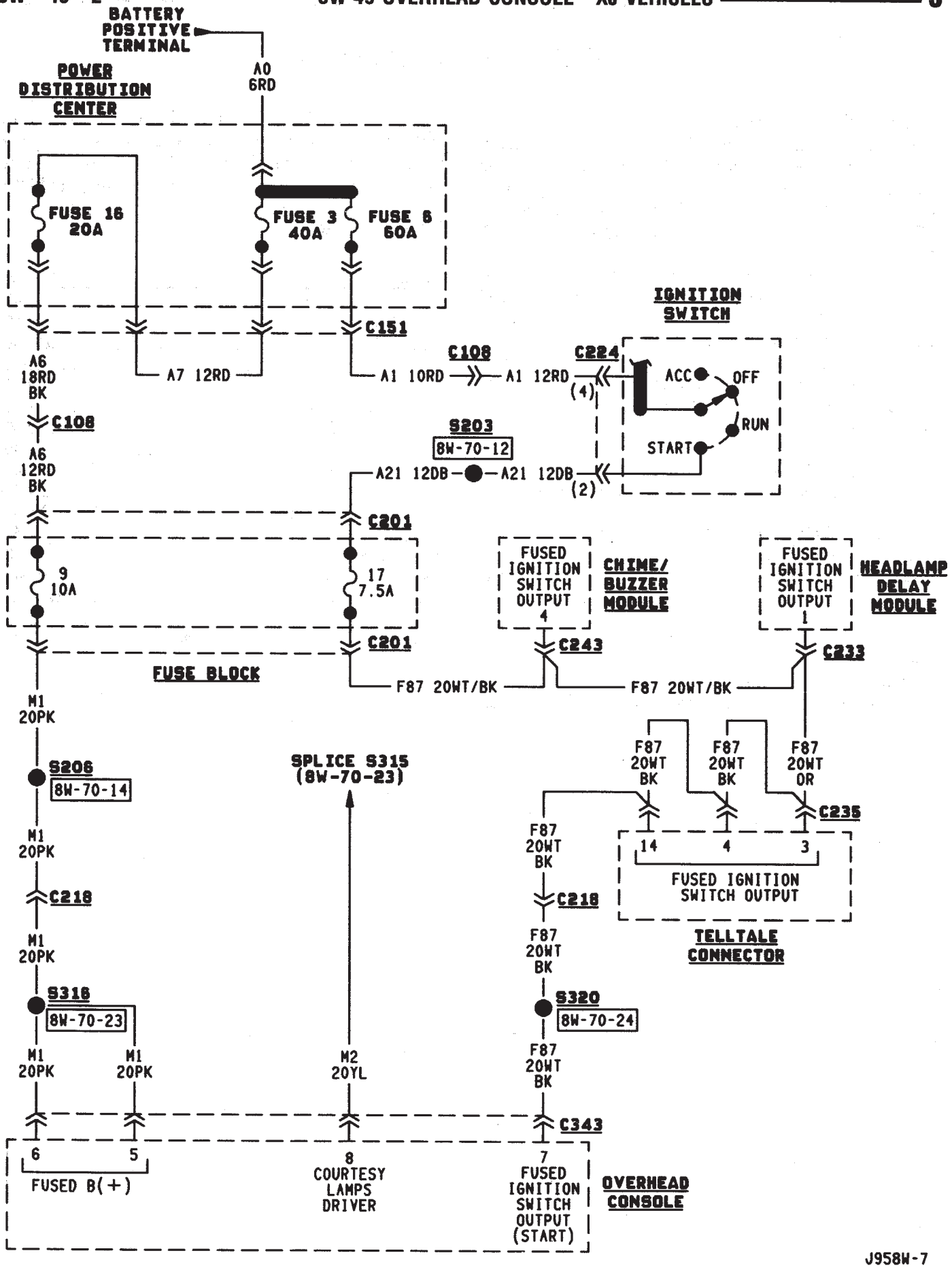
BATTERY POSITIVE TERMINAL
A0 6RD
POWER DISTRIBUTION CENTER
FUSE 16 20A
FUSE 3 40A
FUSE 6 60A
C151
A6 18RD BK
A7 12RD
C108
A1 10RD
A1 12RD
C224
(4)
IGNITION SWITCH
ACC
OFF
RUN
START
S203
8W-70-12
A21 12DB
A21 12DB
(2)
C108
A6 12RD BK
C201
9 10A
17 7.5A
FUSED IGNITION SWITCH OUTPUT 4
CHIME/ BUZZER MODULE
FUSED IGNITION SWITCH OUTPUT 1
HEADLAMP DELAY MODULE
C243
C233
F87 20WT/BK
F87 20WT/BK
C201
FUSE BLOCK
M1 20PK
S206
8W-70-14
SPLICE S315 (8W-70-23)
F87 20WT BK
F87 20WT BK
F87 20WT OR
C235
14
4
3
FUSED IGNITION SWITCH OUTPUT
TELLTALE CONNECTOR
M1 20PK
C218
F87 20WT BK
C218
M1 20PK
F87 20WT BK
S316
8W-70-23
S320
8W-70-24
M1 20PK
M1 20PK
M2 20YL
F87 20WT BK
C343
6
5
FUSED B(+)
8
COURTESY LAMPS DRIVER
7
FUSED IGNITION SWITCH OUTPUT (START)
OVERHEAD CONSOLE
J958W-7

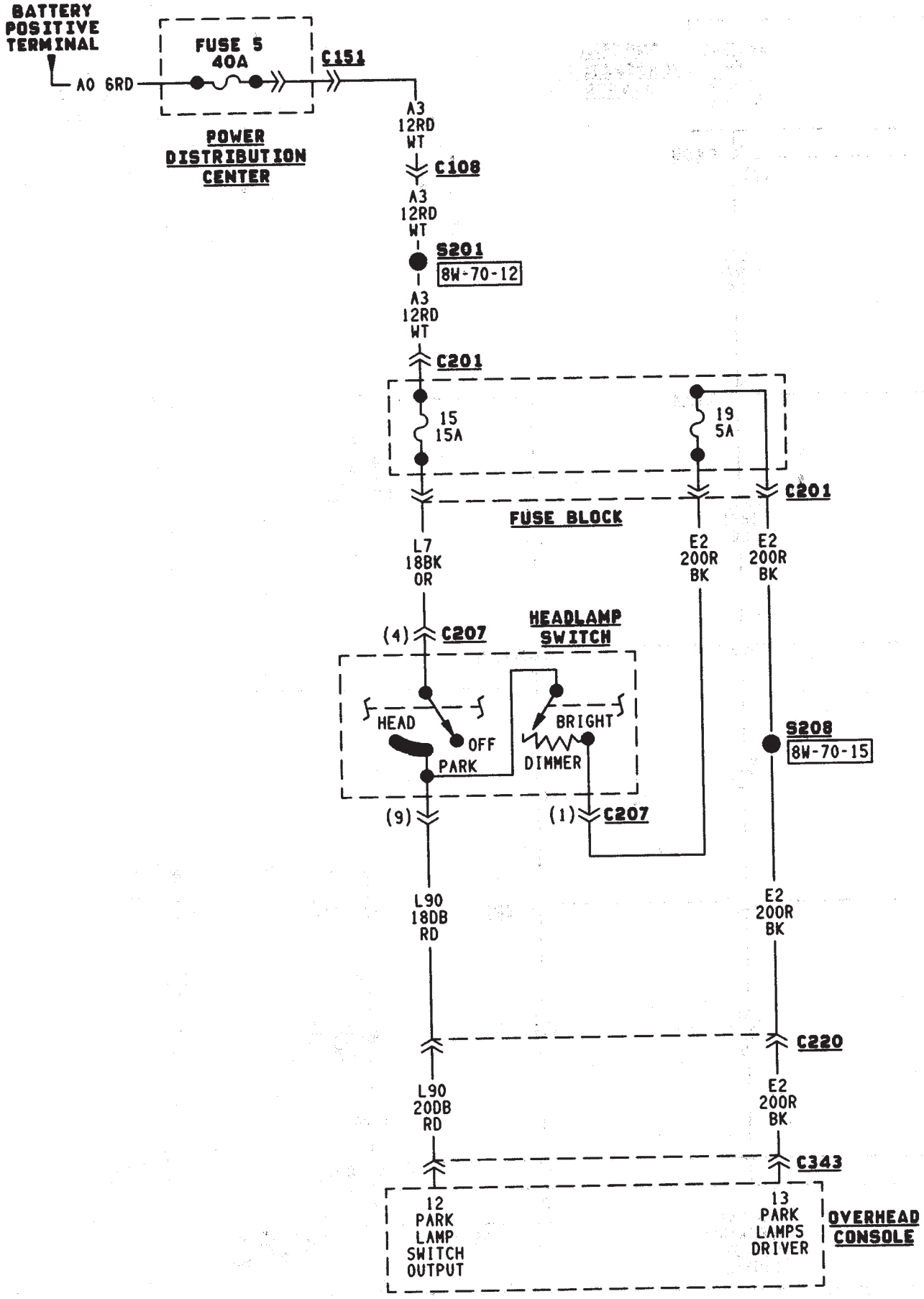
BATTERY POSITIVE TERMINAL
A0 6RD
FUSE 5 40A
C151
POWER DISTRIBUTION CENTER
A3 12RD WT
C108
A3 12RD WT
S201
8W-70-12
A3 12RD WT
C201
15 15A
19 5A
C201
FUSE BLOCK
L7 18BK OR
E2 200R BK
E2 200R BK
(4) C207
HEADLAMP SWITCH
HEAD
OFF
PARK
BRIGHT
DIMMER
S208
8W-70-15
(9)
(1) C207
L90 18DB RD
E2 200R BK
C220
L90 20DB RD
E2 200R BK
C343
12 PARK LAMP SWITCH OUTPUT
13 PARK LAMPS DRIVER
OVERHEAD CONSOLE

J958W-7

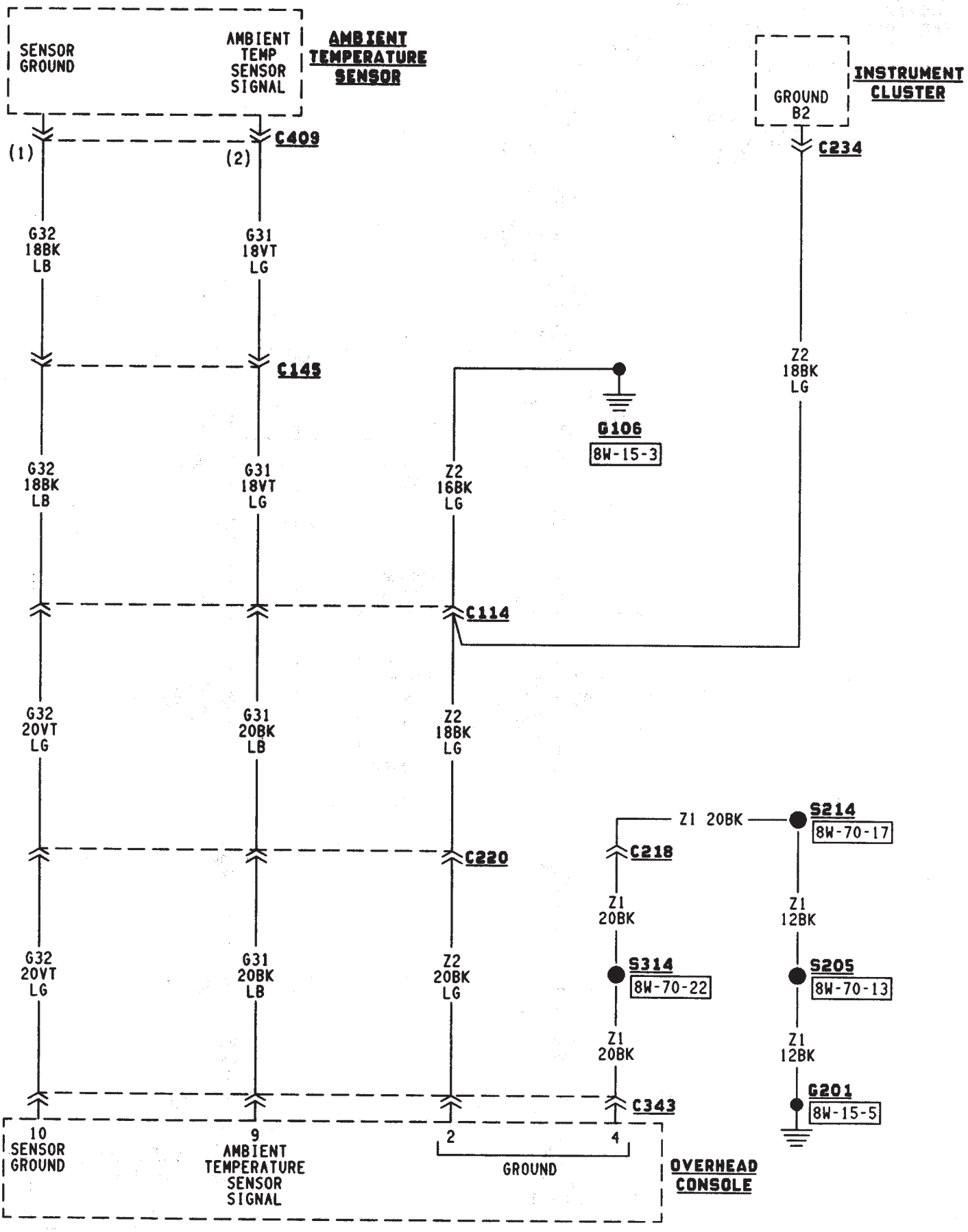
SENSOR GROUND
AMBIENT TEMP SENSOR SIGNAL
AMBIENT TEMPERATURE SENSOR
GROUND B2
INSTRUMENT CLUSTER
(1)
(2)
C409
C234
G32 18BK LB
G31 18VT LG
C145
G106
8W-15-3
Z2 18BK LG
Z2 16BK LG
C114
G32 20VT LG
G31 20BK LB
Z2 18BK LG
C220
Z1 20BK
S214
8W-70-17
C218
Z1 20BK
Z1 12BK
G32 20VT LG
G31 20BK LB
Z2 20BK LG
S314
8W-70-22
S205
8W-70-13
Z1 20BK
Z1 12BK
C343
G201
8W-15-5
10 SENSOR GROUND
9 AMBIENT TEMPERATURE SENSOR SIGNAL
2
4
GROUND
OVERHEAD CONSOLE

J958W-7

FRONT LIGHTING

INDEX

page

Daytime Running Lamp (DRL) Module 2
Diagram Index 2
Fog Lamps 1
Headlamp Delay Module 2
Headlamps 1
Parking Lamps 1

HEADLAMPS

The headlamp switch has three positions: ON, PARK (parking lamps) and OFF. Circuit A3 from fuse 5 in the PDC connects to the headlamp switch and feeds the circuit L7 through fuse 15 in the fuse block. Circuit L7 connects to the headlamp switch.

Circuit A3 also splices to feed circuit L11 through fuse 4 in the fuse block. Circuit L11 connects to the dimmer switch circuitry in the multi-function switch.

Circuit A3 from fuse 5 in the PDC supplies battery voltage to the headlamp switch. The headlamp switch has an internal circuit breaker that connects circuit A3 to circuit F34. Circuit F34 connects to the dimmer switch circuitry in the multi-function switch.

HEADLAMP SWITCH IN OFF OR PARKING LAMP POSITION

Circuit L11 connects to the dimmer switch portion of the multi-function switch. Circuit L11 supplies power for the high beams on circuit L3 when the operator flashes the headlamps with the turn signal stalk of the multi-function switch.

HEADLAMP SWITCH IN ON POSITION

When the headlamp switch is in the ON position, circuit A3 from fuse 5 in the Power Distribution Center (PDC) connects to circuit F34. Circuit F34 connects to the dimmer switch portion of the multi-function switch and feeds circuit L4. Circuit L4 powers the low beam of the headlamps.

When the operator selects high beam operation with the turn signal stalk of the multi-function switch, circuit L11 connects to the L3 circuit. Circuit L3 powers high beam operation.

HEADLAMP GROUND

Circuit Z1 provides ground for both the right and left headlamps. Circuit Z1 also supplies ground for the fog lamps, if equipped.

HELPFUL INFORMATION

- Check fuse 5 in the PDC.
- The headlamp switch has an internal circuit breaker.

PARKING LAMPS

Circuit A3 from fuse 5 in the Power Distribution Center (PDC) connects to a bus bar in the fuse block which feeds circuit L7. Fuse 15 in the fuse block protects circuit L7.

The headlamp switch has three positions: ON, PARK (parking lamps) and OFF, plus a dimmer switch. When the headlamp switch is in the PARK or ON position, the switch connects circuit L7 to circuit L90. From the headlamp switch, circuit L90 branches to power the front parking lamps and rear tail lamps, side marker lamps, and rear license plate lamps.

GROUND CIRCUIT

Circuit Z1 provides a ground for the parking lamps and turn signal lamps. The Z1 circuit also provide ground for the headlamps.

HELPFUL INFORMATION

- Check fuse 5 in the PDC.
- Check fuse 15 in the fuse block.
- When the headlamp switch is in the PARK or ON position, the dimmer circuit, L7, also connects to circuit E2. Circuit E2 continues through fuse 19 in the fuse block. Circuit E2 powers the illumination lamps.

FOG LAMPS

The fog lamps are controlled by the fog lamp switch, park lamp relay and high beam relay. The fog lamps operate only when the headlamp switch is in the ON position, and the operator has selected low-beam operation. When the headlamps are in high-beam operation, the fog lamps will not operate.

Circuit F39 from fuse 5 in the Power Distribution Center (PDC) supplies voltage to the contact side of the park lamp relay.

Circuit L90 supplies power to the coil side of the park lamp relay. Circuit L35 connects to the coil side of the relay and to circuit Z1 through the fog lamp switch. Ground for the coil side of the relay is provided on circuit Z1 through the fog lamp switch.

When the fog lamp switch closes, the park lamp relay contacts close and circuit F39 passes through the relay to power the contact side of the high beam relay. When the headlamp high beams are OFF, the high beam relay is not energized and voltage flows through the normally closed contacts to circuit L39.

Circuit L39 supplies voltage to the fog lamps. Circuit Z1 provides ground for the fog lamps.

If the high beam lamps are ON, circuit G465 energizes the high beam relay. When the high beam relay energizes, the contacts open and power is not supplied to the fog lamps. Circuit Z1 provides ground for the coil side of the high beam relay.

Circuit E2 provides voltage for the illumination lamp in the fog lamp switch.

HELPFUL INFORMATION

• Circuit L3 splices to power circuit G465. Circuit L3 powers the high beam circuit of the headlamps.

HEADLAMP DELAY MODULE

When the operator turns off the ignition switch and the headlamp switch, the headlamp delay module powers the headlamps for approximately 45 seconds.

When the ignition switch is in the RUN position, circuit A21 powers circuit F87 through fuse 17 in the fuse block. Circuit F87 supplies the IGNITION ON/OFF signal to the headlamp delay module. Circuit Z1 provides ground for the module.

When the headlamp delay module activates, it connects circuit X4 from fuse 11 in the fuse block to circuit F34. Circuit F34 powers the headlamps through the headlamp dimmer switch circuit L3.

HELPFUL INFORMATION

Circuit A7 from fuse 3 in the PDC supplies voltage to the fuse block bus bar that powers circuit X4 through the fuse in cavity 11.

DAYTIME RUNNING LAMP (DRL) MODULE

On vehicles built for sale in Canada, the low-beam headlamps operate when the ignition switch is in the RUN position.

When the ignition switch is in the RUN position, circuit A1 from fuse 6 in the Power Distribution Center (PDC), connects to circuit A21. Circuit A21 splices to supply power to the DRL module.

Circuit A3 from fuse 5 in the PDC connects to DRL module. Circuit A3 is HOT at all times.

The DRL module receives the vehicle speed sensor input from circuit G7. Circuit G465 from the DRL module splices to circuit L3 to provide power for the high beam indicator lamp in the instrument cluster.

Circuit L4 powers the low beams of the left and right headlamps. When the headlamp switch is OFF, the DRL module powers the low beams on circuit L4. When the headlamps are ON, the dimmer switch in the multi-function switch powers the low beams on circuit L4.

Circuit L3 feeds the high beams of the headlamps. When the operator flashes the headlamps with the stalk of the multi-function switch, the DRL senses voltage on circuit L3. When it senses voltage on circuit L3, the DRL module stops supplying power to the low beams on circuit L4.

Circuit Z12 provides ground for the DRL module.

DIAGRAM INDEX

Component	Page
Chime/Buzzer Module	8W-50-8
Daytime Running Lamps (DRL) Module	8W-50-3
Fog Lamps	8W-50-7
Fog Lamp Switch	8W-50-7
Fuse 3 (PDC)	8W-50-9
Fuse 4 (Fuse Block)	8W-50-9
Fuse 5 (PDC)	8W-50-2, 3, 6, 9
Fuse 6 (PDC)	8W-50-2, 8
Fuse 7 (PDC)	8W-50-6
Fuse 11 (Fuse Block)	8W-50-9
Fuse 13 (PDC)	8W-50-6
Fuse 15 (Fuse Block)	8W-50-3, 6
Fuse 17 (Fuse Block)	8W-50-8
Fuse 19 (Fuse Block)	8W-50-6
Headlamps	8W-50-5
Headlamp Dimmer Switch	8W-50-4, 9
Headlamp Switch	8W-50-4, 6, 9
High Beam Relay	8W-50-7
Ignition Switch	8W-50-3, 8
Park Lamp Relay	8W-50-6
Side Marker Lamps	8W-50-5
Tail, Stop and Turn Signal Lamps	8W-50-5
Telltale Connector (Instrument Cluster)	8W-50-9

WITH DAYTIME RUNNING LAMPS

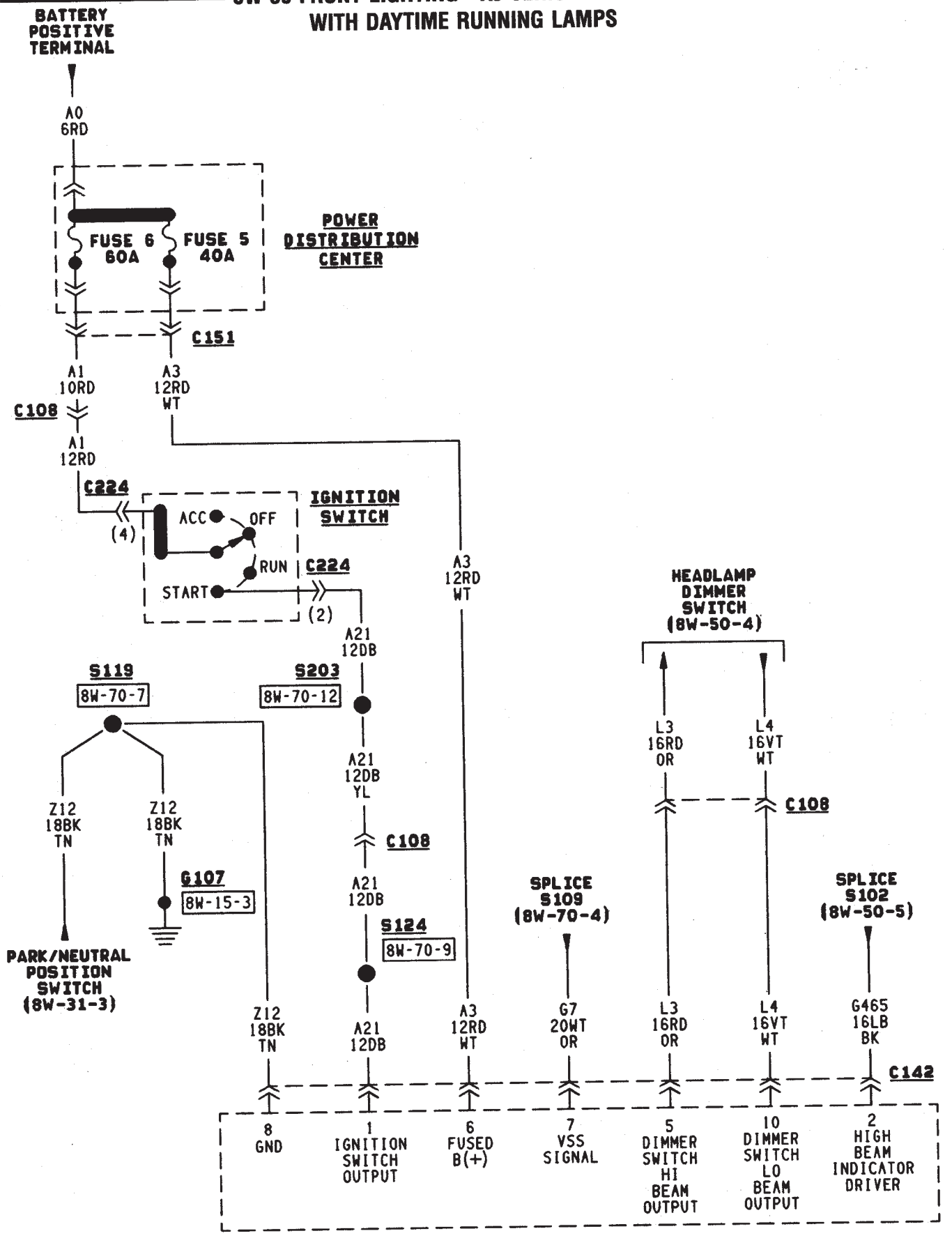

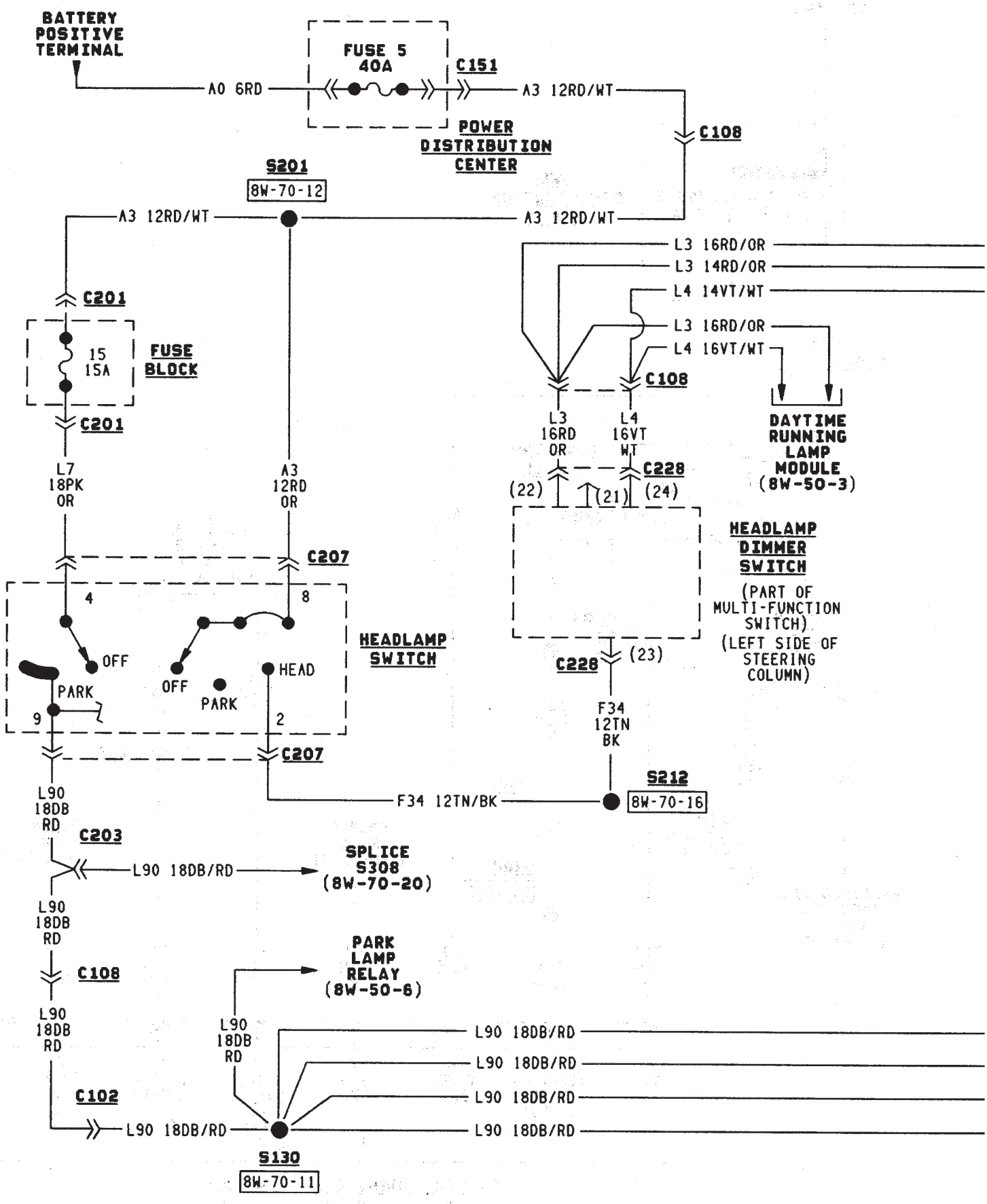
BATTERY POSITIVE TERMINAL
A0 6RD
FUSE 5 40A
C151
A3 12RD/WT
POWER DISTRIBUTION CENTER
C108
S201
8W-70-12
A3 12RD/WT
A3 12RD/WT
L3 16RD/OR
L3 14RD/OR
L4 14VT/WT
L3 16RD/OR
L4 16VT/WT
C201
15 15A
FUSE BLOCK
C201
C108
L3 16RD OR
L4 16VT WT
DAYTIME RUNNING LAMP MODULE (8W-50-3)
C228
(22)
(21)
(24)
L7 18PK OR
A3 12RD OR
C207
4
8
OFF
PARK
OFF
PARK
HEAD
HEADLAMP SWITCH
HEADLAMP DIMMER SWITCH
(PART OF MULTI-FUNCTION SWITCH)
(LEFT SIDE OF STEERING COLUMN)
C228
(23)
9
2
C207
F34 12TN BK
S212
8W-70-16
L90 18DB RD
F34 12TN/BK
C203
L90 18DB/RD
SPLICE S308 (8W-70-20)
L90 18DB RD
C108
PARK LAMP RELAY (8W-50-6)
L90 18DB RD
L90 18DB/RD
L90 18DB/RD
L90 18DB/RD
L90 18DB/RD
C102
L90 18DB/RD
S130
8W-70-11

J958W-7

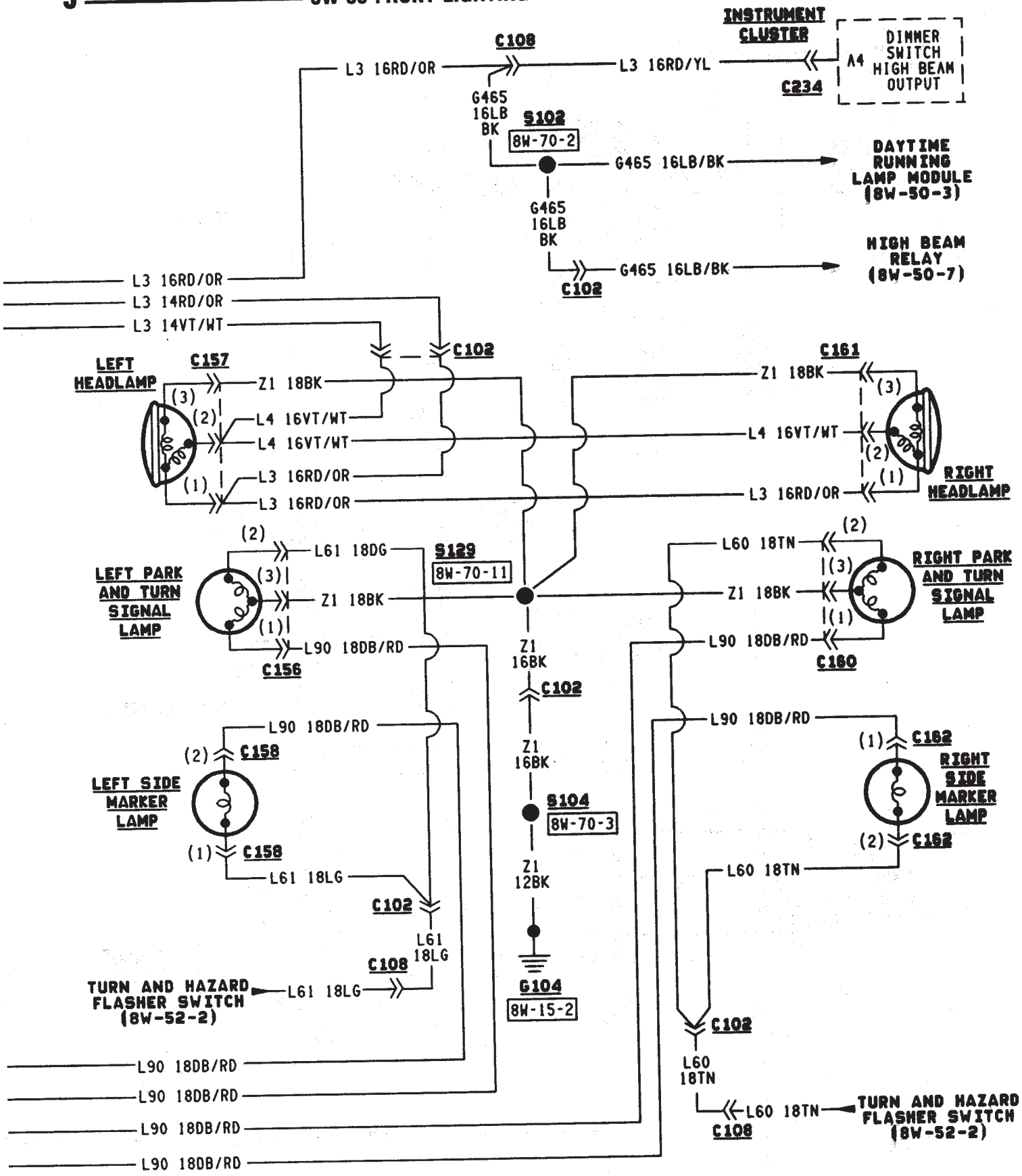
INSTRUMENT CLUSTER
C108
L3 16RD/OR
L3 16RD/YL
A4 DIMMER SWITCH HIGH BEAM OUTPUT
C234
G465 16LB BK
S102
8W-70-2
G465 16LB/BK
DAYTIME RUNNING LAMP MODULE (8W-50-3)
G465 16LB BK
G465 16LB/BK
HIGH BEAM RELAY (8W-50-7)
C102
L3 16RD/OR
L3 14RD/OR
L3 14VT/WT
C102
LEFT HEADLAMP
C157
(3)
(2)
(1)
Z1 18BK
L4 16VT/WT
L4 16VT/WT
L3 16RD/OR
L3 16RD/OR
C161
Z1 18BK
L4 16VT/WT
L3 16RD/OR
RIGHT HEADLAMP
(2)
(3)
(1)
LEFT PARK AND TURN SIGNAL LAMP
L61 18DG
Z1 18BK
L90 18DB/RD
C156
S129
8W-70-11
Z1 16BK
C102
L60 18TN
Z1 18BK
L90 18DB/RD
C160
RIGHT PARK AND TURN SIGNAL LAMP
L90 18DB/RD
(2) C158
LEFT SIDE MARKER LAMP
(1) C158
L61 18LG
C102
L61 18LG
C108
TURN AND HAZARD FLASHER SWITCH (8W-52-2)
L61 18LG
Z1 16BK
S104
8W-70-3
Z1 12BK
G104
8W-15-2
L90 18DB/RD
(1) C162
RIGHT SIDE MARKER LAMP
(2) C162
L60 18TN
C102
L60 18TN
C108
L60 18TN
TURN AND HAZARD FLASHER SWITCH (8W-52-2)
L90 18DB/RD
L90 18DB/RD
L90 18DB/RD
L90 18DB/RD

J958W-7

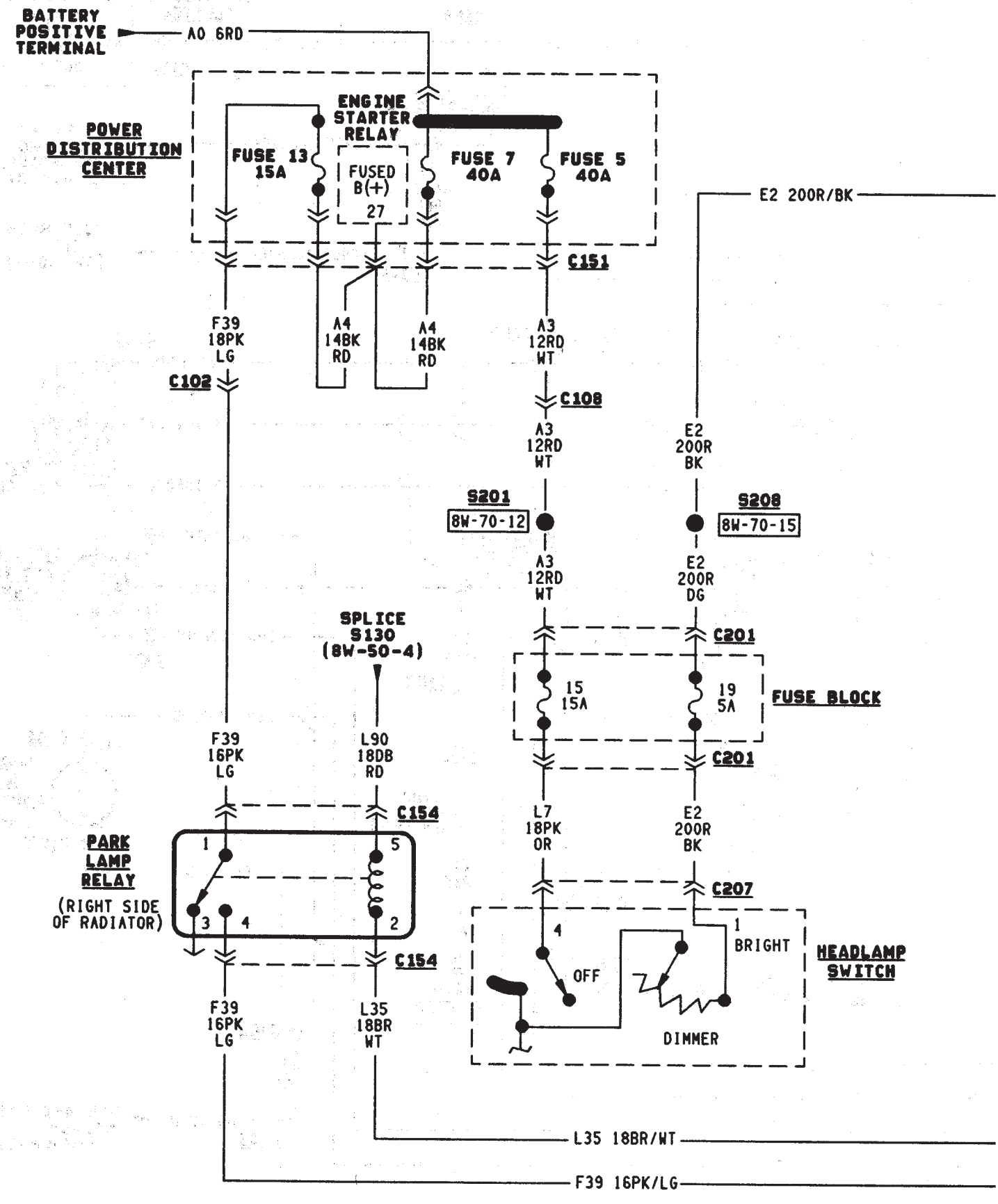
BATTERY POSITIVE TERMINAL
A0 6RD
POWER DISTRIBUTION CENTER
ENGINE STARTER RELAY
FUSE 13 15A
FUSED B(+) 27
FUSE 7 40A
FUSE 5 40A
E2 200R/BK
C151
F39 18PK LG
A4 14BK RD
A4 14BK RD
A3 12RD WT
C102
C108
A3 12RD WT
E2 200R BK
S201
8W-70-12
S208
8W-70-15
A3 12RD WT
E2 200R DG
SPLICE S130 (8W-50-4)
C201
15 15A
19 5A
FUSE BLOCK
F39 16PK LG
L90 18DB RD
C201
C154
L7 18PK OR
E2 200R BK
PARK LAMP RELAY
(RIGHT SIDE OF RADIATOR)
1
5
3
4
2
C207
C154
4
OFF
1
BRIGHT
HEADLAMP SWITCH
DIMMER
F39 16PK LG
L35 18BR WT
L35 18BR/WT
F39 16PK/LG

J958W-7

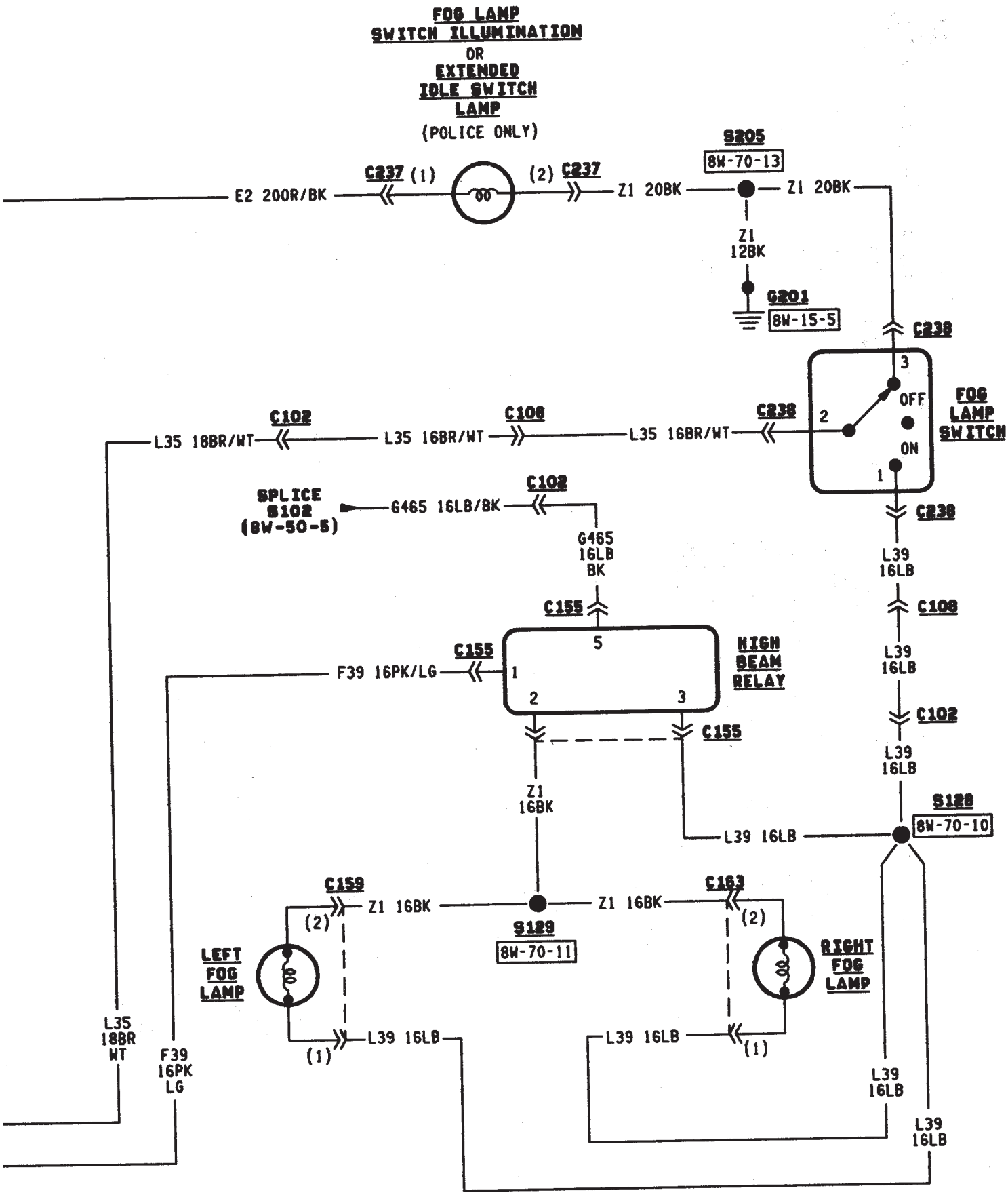
FOG LAMP SWITCH ILLUMINATION
OR
EXTENDED IDLE SWITCH LAMP
(POLICE ONLY)
E2 20OR/BK
C237 (1)
(2) C237
Z1 20BK
S205
8W-70-13
Z1 20BK
Z1 12BK
G201
8W-15-5
C238
3
OFF
2
ON
1
FOG LAMP SWITCH
C102
L35 18BR/WT
C108
L35 16BR/WT
C238
L35 16BR/WT
SPLICE S102 (8W-50-5)
G465 16LB/BK
C102
G465 16LB BK
C238
L39 16LB
C155
5
C155
F39 16PK/LG
1
2
3
HIGH BEAM RELAY
C108
L39 16LB
C102
L39 16LB
C155
Z1 16BK
S128
8W-70-10
L39 16LB
C159
Z1 16BK
Z1 16BK
C163
(2)
(2)
S129
8W-70-11
LEFT FOG LAMP
RIGHT FOG LAMP
L35 18BR WT
F39 16PK LG
L39 16LB
(1)
L39 16LB
(1)
L39 16LB
L39 16LB

J958W-7

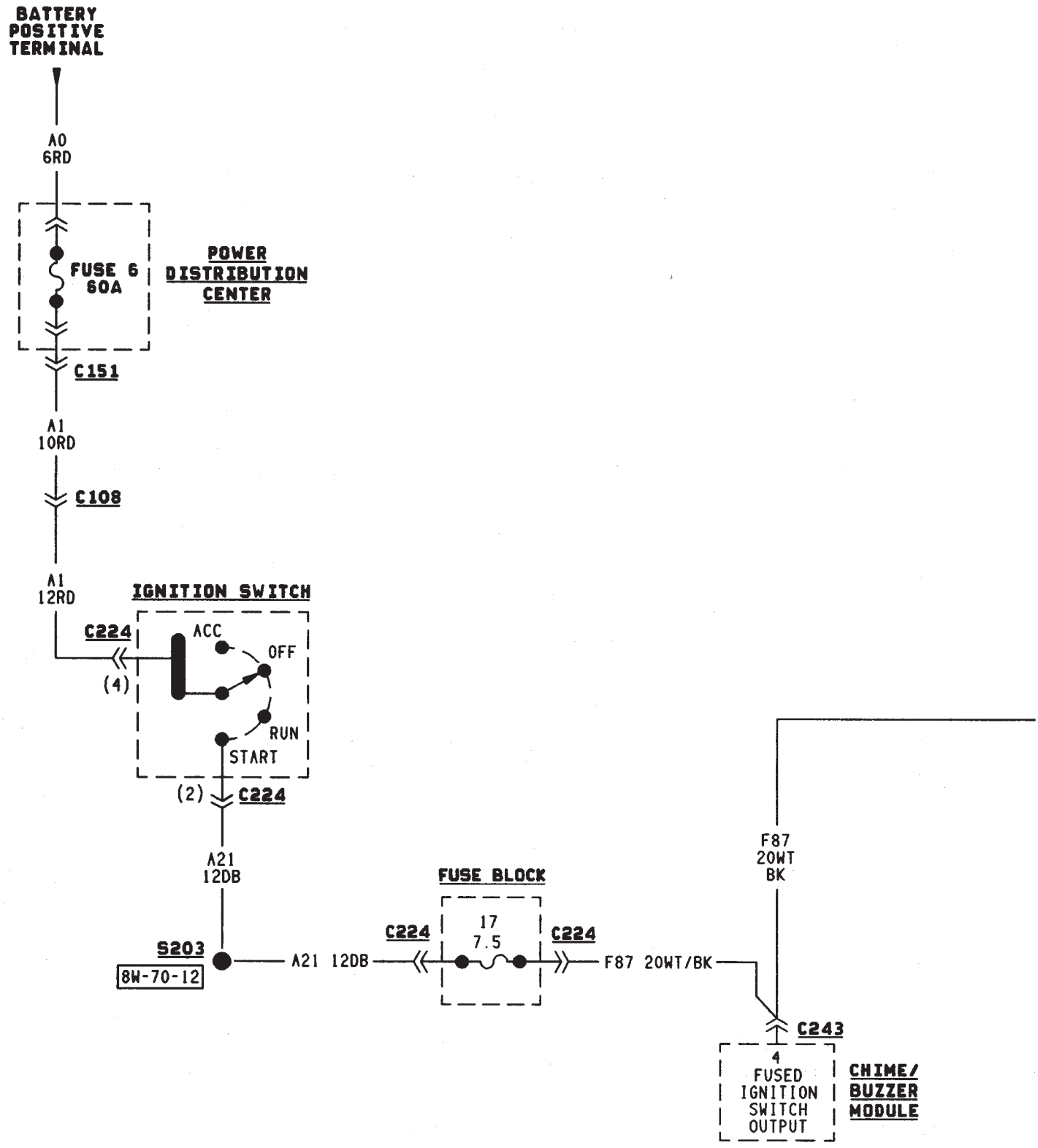
BATTERY POSITIVE TERMINAL
A0 6RD
FUSE 6 60A
POWER DISTRIBUTION CENTER
C151
A1 10RD
C108
A1 12RD
IGNITION SWITCH
C224
(4)
ACC
OFF
RUN
START
(2)
C224
A21 12DB
S203
8W-70-12
A21 12DB
FUSE BLOCK
C224
17 7.5
C224
F87 20WT/BK
F87 20WT BK
C243
4
FUSED IGNITION SWITCH OUTPUT
CHIME/ BUZZER MODULE

J958W-7

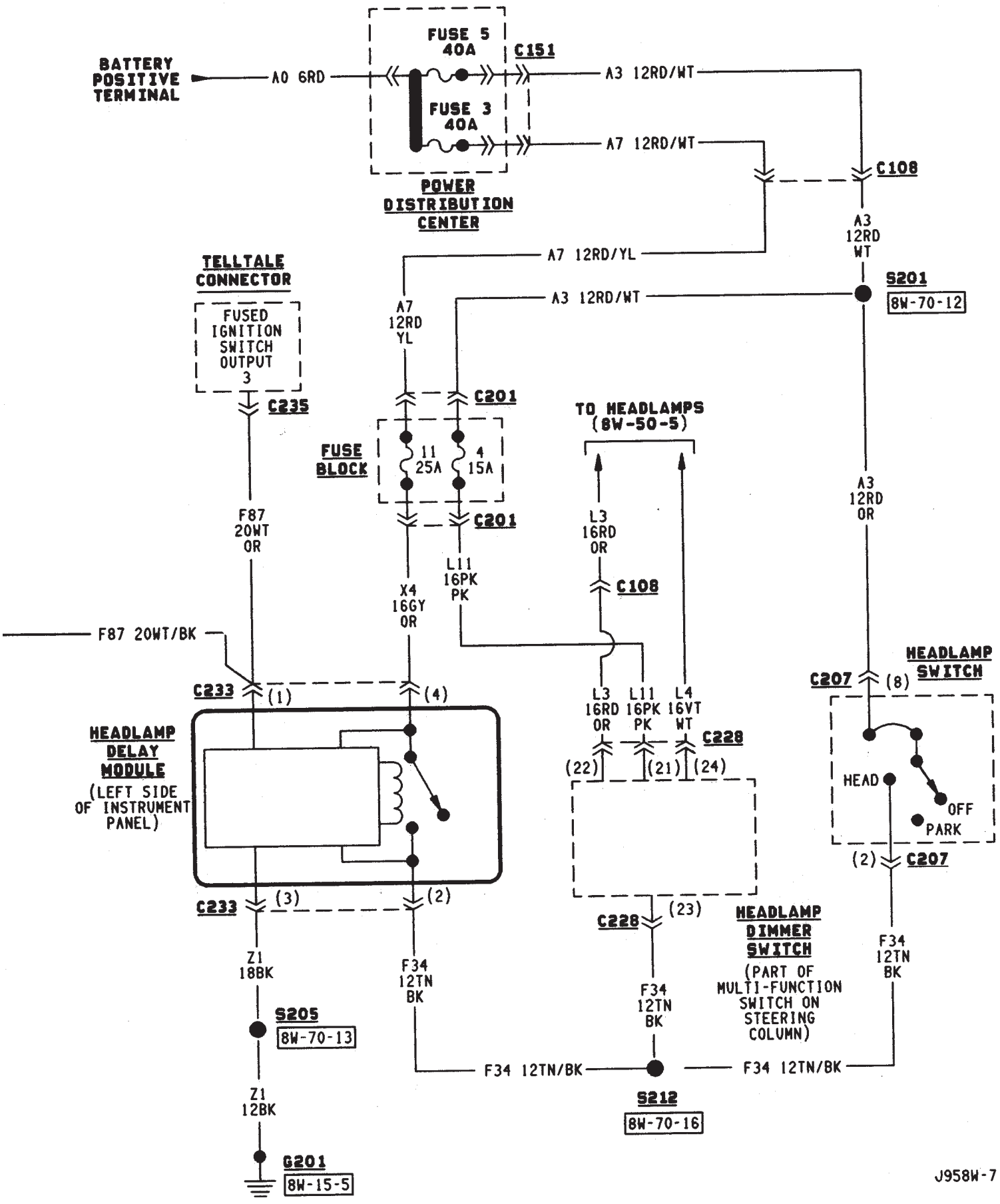
BATTERY POSITIVE TERMINAL
A0 6RD
FUSE 5 40A
FUSE 3 40A
C151
A3 12RD/WT
A7 12RD/WT
POWER DISTRIBUTION CENTER
C108
A3 12RD WT
S201
8W-70-12
A7 12RD/YL
A3 12RD/WT
TELLTALE CONNECTOR
FUSED IGNITION SWITCH OUTPUT 3
C235
A7 12RD YL
C201
FUSE BLOCK
11 25A
4 15A
C201
F87 20WT OR
X4 16GY OR
L11 16PK PK
TO HEADLAMPS (8W-50-5)
L3 16RD OR
C108
A3 12RD OR
F87 20WT/BK
C233 (1)
(4)
HEADLAMP DELAY MODULE
(LEFT SIDE OF INSTRUMENT PANEL)
L3 16RD OR
L11 16PK PK
L4 16VT WT
C228
(22)
(21)
(24)
HEADLAMP SWITCH
C207 (8)
HEAD
OFF
PARK
(2) C207
C233 (3)
(2)
C228 (23)
HEADLAMP DIMMER SWITCH
(PART OF MULTI-FUNCTION SWITCH ON STEERING COLUMN)
Z1 18BK
F34 12TN BK
F34 12TN BK
F34 12TN BK
S205
8W-70-13
F34 12TN/BK
F34 12TN/BK
S212
8W-70-16
Z1 12BK
G201
8W-15-5
J958W-7

REAR LIGHTING

TAIL LAMPS AND REAR LICENSE PLATE LAMPS

Circuit A3 from fuse 5 in the Power Distribution Center (PDC) connects to a bus bar in the fuse block which feeds circuit L7. Fuse 15 in the fuse block protects circuit L7.

The headlamp switch has three positions: ON, PARK (parking lamps) and OFF, plus a dimmer switch. When the headlamp switch is in the PARK or ON position, the switch connects circuit L7 to circuit L90. From the headlamp switch, circuit L90 branches to power the front parking lamps and rear tail lamps, side marker lamps, and rear license plate lamps.

GROUND CIRCUIT

Circuit Z1 provides a ground for the parking lamps, tail lamps, and rear license plate lamps.

HELPFUL INFORMATION

- If the vehicle is equipped with factory installed trailer tow, circuit L90 splices to the trailer tow harness.
- Check fuse 5 in PDC.
- Check fuse 15 in the fuse block.
- When the headlamp switch is in the PARK or ON position, circuit L7 also connects to circuit E2. Circuit E2 continues through fuse 19 in the fuse block. Circuit E2 powers the illumination lamps.

STOP LAMPS AND CHMSL LAMPS

Circuit L9 from fuse 4 in the Power Distribution Center (PDC) connects to the stop lamp switch.

When the operator depresses the brake pedal, the stop lamp switch closes and connects circuit L9 to circuit L50. Circuit L50 connects to the stop lamps and Center High Mounted Stop Lamps (CHMSL). Circuit Z1 provides a ground for the stop lamps and CHMSL lamps.

HELPFUL INFORMATION

- Check fuse 4 in the PDC.
- Check for continuity across the stop lamp switch when it is closed.

BACK-UP LAMPS

In the START or RUN position, the ignition switch connects circuit A1 from fuse 6 in the Power Distribution Center (PDC) to circuit A21. Circuit A21 feeds a bus bar in the PDC that powers circuit F12 through fuse 11.

Circuit F20 supplies power to the back-up lamp switch. On automatic transmission equipped vehicles, the back-up lamp switch is part of an assembly that includes the PARK/NEUTRAL position switch. When the operator puts the transmission in REVERSE, the back-up lamp switch connects circuit F20 to circuit L10. Circuit L10 feeds the back-up lamps. Circuit Z1 provides ground for the back-up lamps.

HELPFUL INFORMATION

- Check fuses 6 and 11 in the PDC.
- Check for continuity across the back-up lamp switch when it is closed.

DIAGRAM INDEX

Component	Page
Back-Up Lamps	8W-51-4, 5
Back-Up Lamp Switch	8W-51-2
Center High Mounted Stop Lamps (CHMSL)	8W-51-3
Fuse 15 (Fuse Block)	8W-51-2
Fuse 4 (PDC)	8W-51-3
Fuse 6 (PDC)	8W-51-2
Fuse 7 (PDC)	8W-51-2
Fuse 11 (PDC)	8W-51-2
Headlamp Switch	8W-51-2
Ignition Switch	8W-51-2
License Plate Lamp	8W-51-3
Park/Neutral Position Switch	8W-51-2
Side Marker Lamps	8W-51-4, 5
Stop Lamp Switch	8W-51-3
Tail/Stop Lamps	8W-51-4, 5
Turn Signal Lamps	8W-51-4, 5

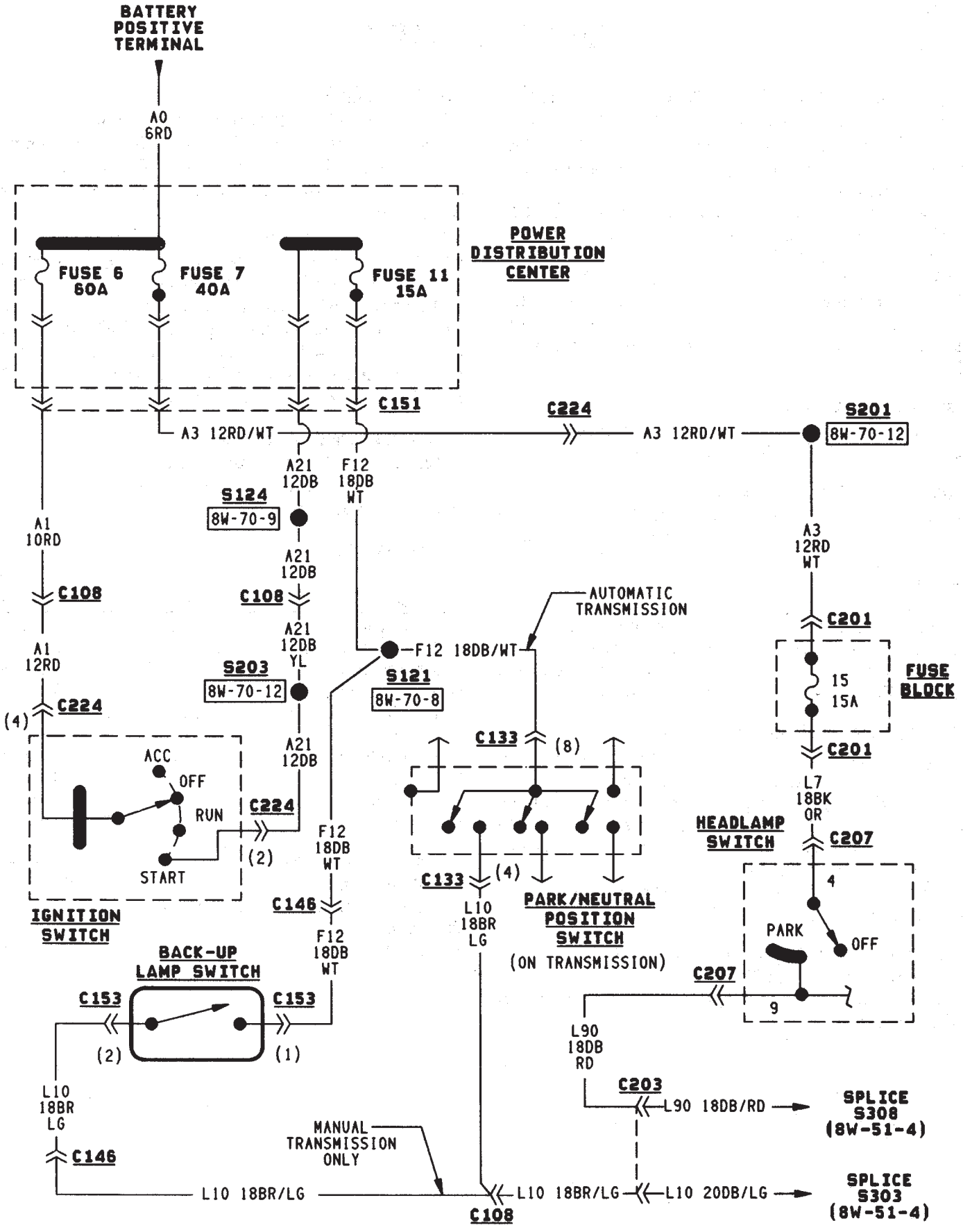
BATTERY POSITIVE TERMINAL
A0 6RD
POWER DISTRIBUTION CENTER
FUSE 6 60A
FUSE 7 40A
FUSE 11 15A
C151
A3 12RD/WT
C224
A3 12RD/WT
S201
8W-70-12
A21 12DB
F12 18DB WT
S124
8W-70-9
A1 10RD
C108
A21 12DB
C108
A21 12DB YL
S203
8W-70-12
A1 12RD
C224
(4)
ACC
OFF
RUN
START
C224
(2)
A21 12DB
IGNITION SWITCH
F12 18DB WT
C146
F12 18DB WT
BACK-UP LAMP SWITCH
C153
C153
(2)
(1)
L10 18BR LG
C146
L10 18BR/LG
MANUAL TRANSMISSION ONLY
C108
F12 18DB/WT
S121
8W-70-8
AUTOMATIC TRANSMISSION
C133
(8)
C133
(4)
L10 18BR LG
PARK/NEUTRAL POSITION SWITCH
(ON TRANSMISSION)
A3 12RD WT
C201
15 15A
FUSE BLOCK
C201
L7 18BK OR
HEADLAMP SWITCH
C207
4
PARK
OFF
C207
9
L90 18DB RD
C203
L90 18DB/RD
SPLICE S308 (8W-51-4)
L10 18BR/LG
L10 20DB/LG
SPLICE S303 (8W-51-4)

J958W-7

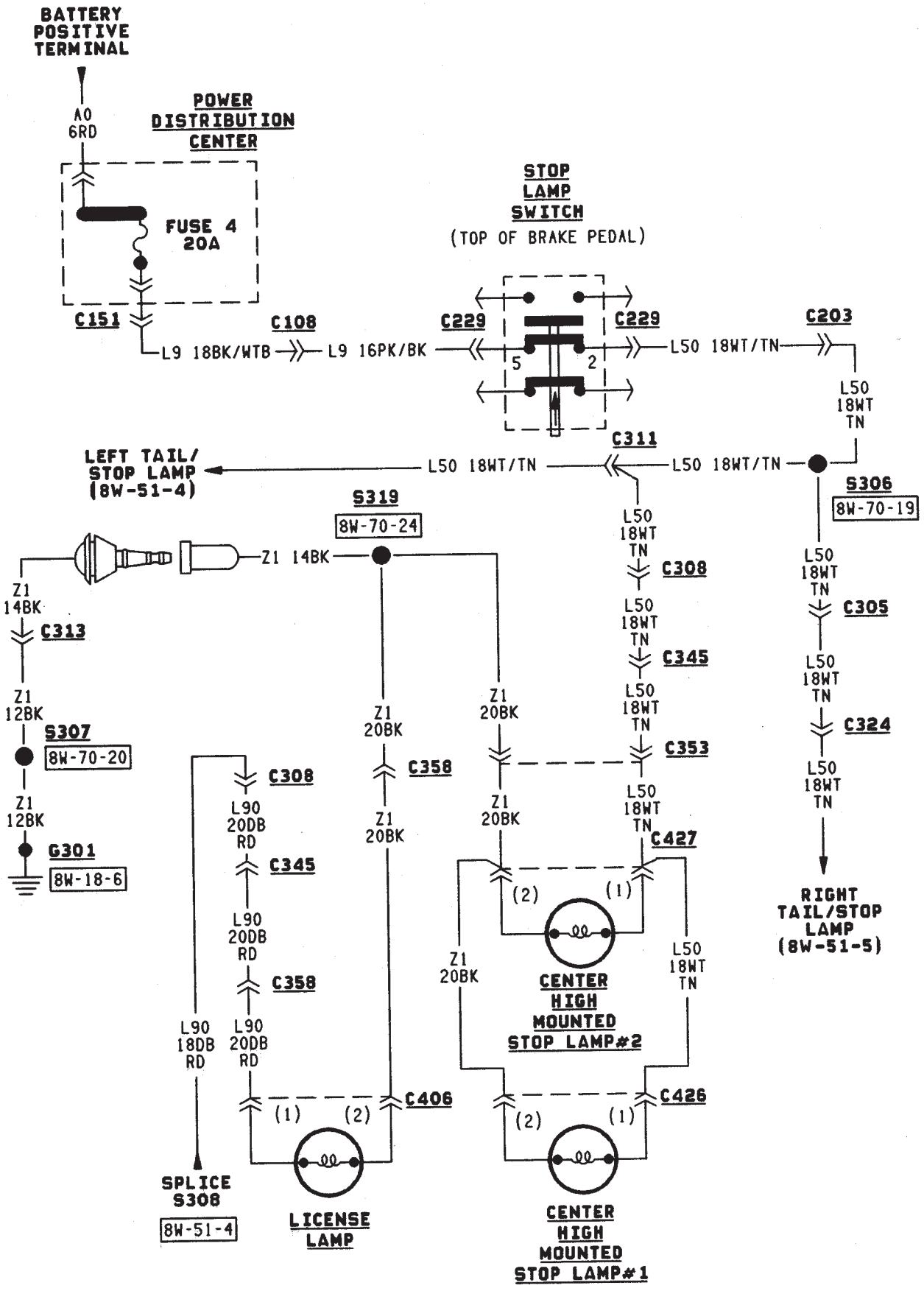
BATTERY POSITIVE TERMINAL
A0 6RD
POWER DISTRIBUTION CENTER
FUSE 4 20A
C151
C108
L9 18BK/WTB
L9 16PK/BK
STOP LAMP SWITCH
(TOP OF BRAKE PEDAL)
C229
C229
5
2
L50 18WT/TN
C203
L50 18WT TN
C311
LEFT TAIL/ STOP LAMP (8W-51-4)
L50 18WT/TN
L50 18WT/TN
S306
8W-70-19
S319
8W-70-24
Z1 14BK
L50 18WT TN
C308
L50 18WT TN
C305
L50 18WT TN
C345
L50 18WT TN
C324
Z1 14BK
C313
Z1 12BK
S307
8W-70-20
Z1 12BK
G301
8W-18-6
Z1 20BK
C358
Z1 20BK
Z1 20BK
C353
L50 18WT TN
C427
C308
L90 20DB RD
C345
L90 20DB RD
C358
L90 18DB RD
L90 20DB RD
(1)
(2)
C406
(2)
(1)
Z1 20BK
L50 18WT TN
C426
(2)
(1)
RIGHT TAIL/STOP LAMP (8W-51-5)
SPLICE S308
8W-51-4
LICENSE LAMP
CENTER HIGH MOUNTED STOP LAMP#2
CENTER HIGH MOUNTED STOP LAMP#1

J958W-7

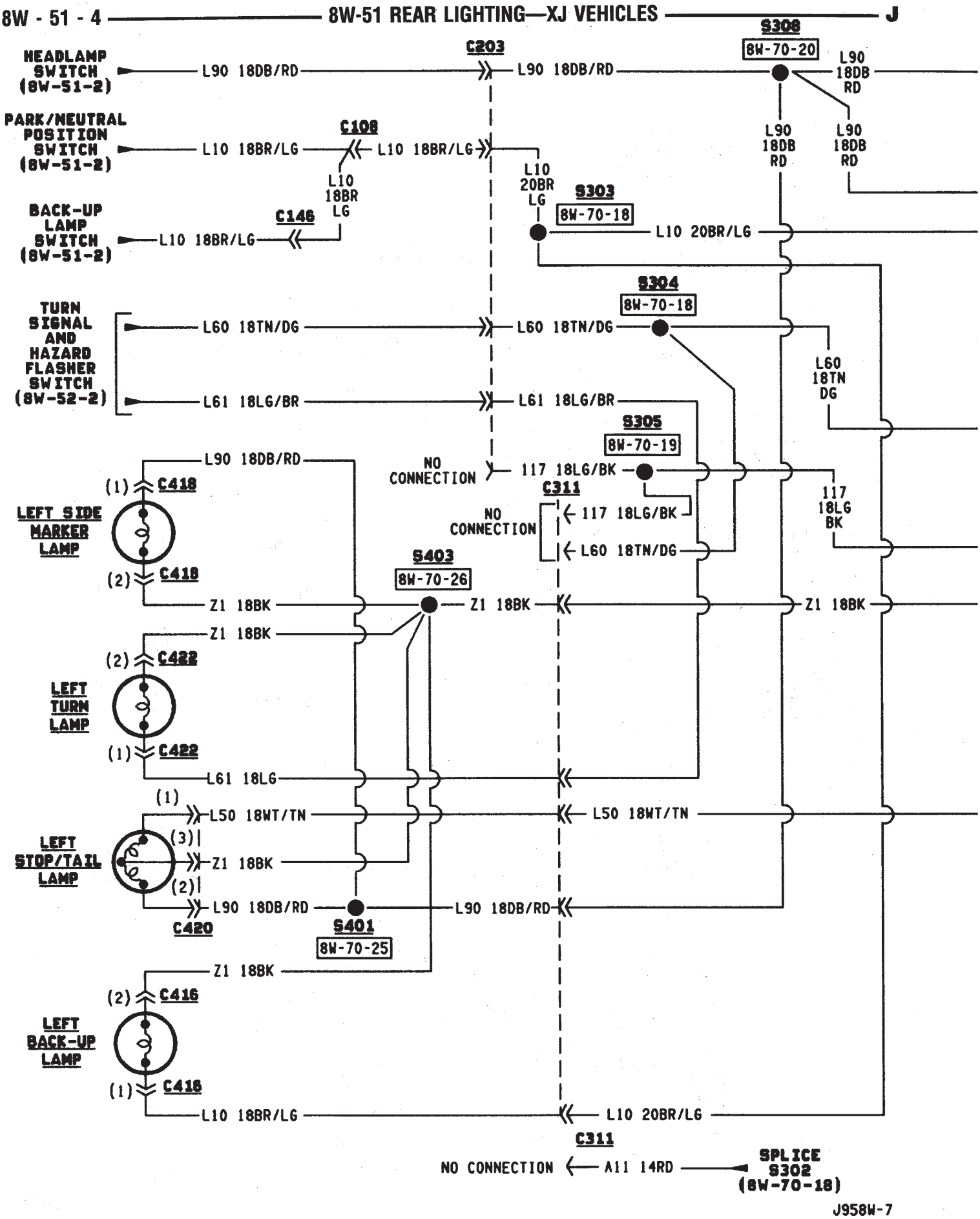
HEADLAMP SWITCH (8W-51-2)
L90 18DB/RD
C203
L90 18DB/RD
S308
8W-70-20
L90 18DB RD
PARK/NEUTRAL POSITION SWITCH (8W-51-2)
L10 18BR/LG
C108
L10 18BR/LG
L10 18BR LG
L10 20BR LG
S303
8W-70-18
L10 20BR/LG
BACK-UP LAMP SWITCH (8W-51-2)
C146
L10 18BR/LG
TURN SIGNAL AND HAZARD FLASHER SWITCH (8W-52-2)
L60 18TN/DG
L61 18LG/BR
S304
8W-70-18
L60 18TN DG
S305
8W-70-19
NO CONNECTION
117 18LG/BK
C311
117 18LG BK
L90 18DB/RD
C418
LEFT SIDE MARKER LAMP
S403
8W-70-26
Z1 18BK
C422
LEFT TURN LAMP
L61 18LG
L50 18WT/TN
LEFT STOP/TAIL LAMP
C420
S401
8W-70-25
C416
LEFT BACK-UP LAMP
A11 14RD
SPLICE S302 (8W-70-18)
J958W-7

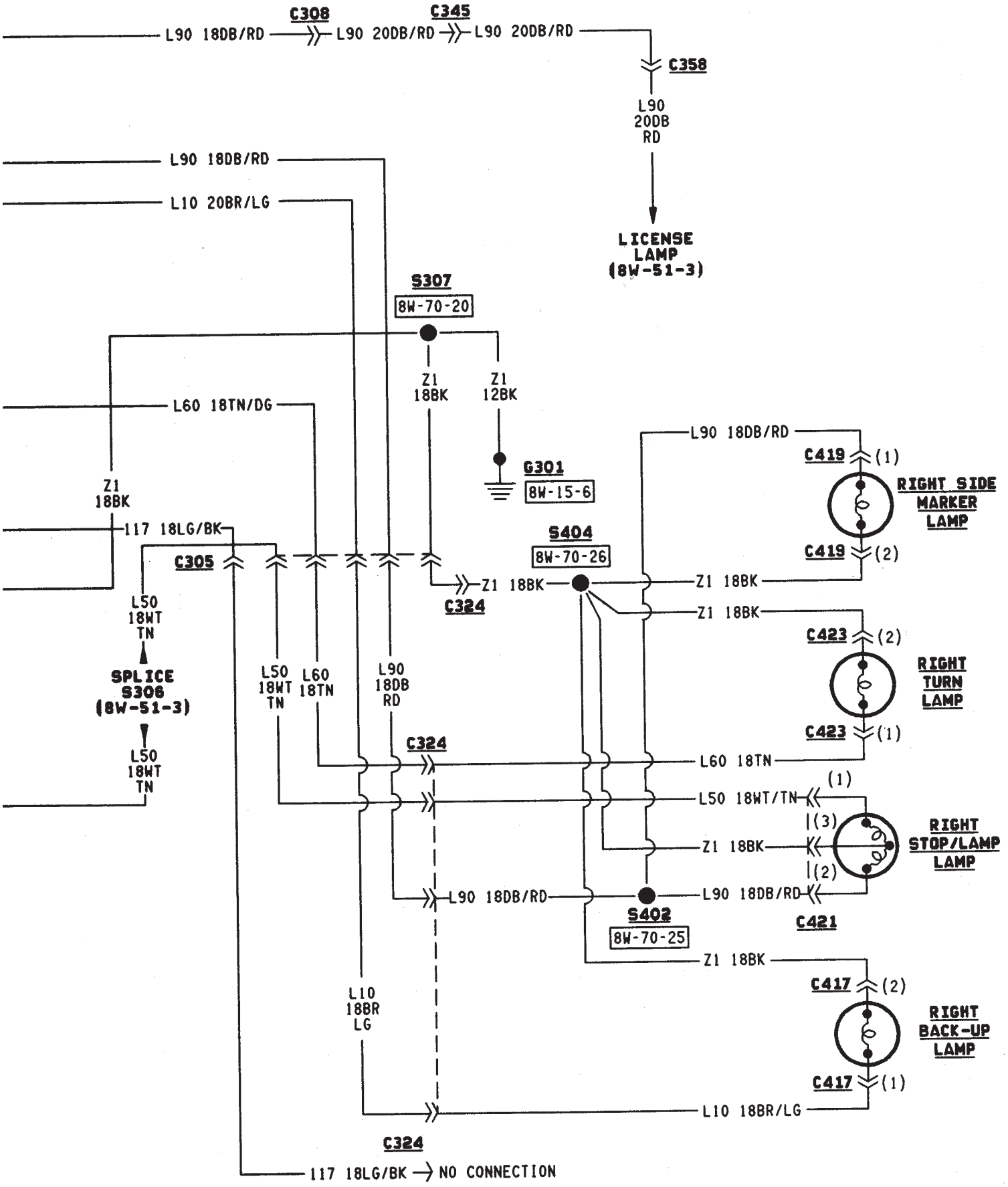
C308
C345
L90 18DB/RD
L90 20DB/RD
L90 20DB/RD
C358
L90
20DB
RD
LICENSE
LAMP
(8W-51-3)
L90 18DB/RD
L10 20BR/LG
S307
8W-70-20
L60 18TN/DG
Z1
18BK
Z1
18BK
Z1
12BK
G301
8W-15-6
Z1
18BK
117 18LG/BK
C305
L50
18WT
TN
SPLICE
S306
(8W-51-3)
L50
18WT
TN
L50
18WT
TN
L60
18TN
L90
18DB
RD
C324
Z1 18BK
C324
S404
8W-70-26
L90 18DB/RD
C419
(1)
RIGHT SIDE
MARKER
LAMP
C419
(2)
Z1 18BK
Z1 18BK
C423
(2)
RIGHT
TURN
LAMP
C423
(1)
L60 18TN
(1)
L50 18WT/TN
(3)
Z1 18BK
RIGHT
STOP/LAMP
LAMP
(2)
L90 18DB/RD
L90 18DB/RD
S402
8W-70-25
C421
Z1 18BK
C417
(2)
RIGHT
BACK-UP
LAMP
C417
(1)
L10
18BR
LG
L10 18BR/LG
C324
117 18LG/BK → NO CONNECTION

J958W-7

TURN SIGNALS

COMBINATION FLASHER

In the ACCESSORY or RUN position, the ignition switch connects circuit A1 from fuse 6 in the Power Distribution Center (PDC) to circuit A48. Circuit A48 feeds circuit F83 through fuse 8 in the fuse block.

Circuit F83 powers the combination flasher for the turn signals. Circuit L9 from fuse 4 in the PDC supplies battery voltage to the combination flasher for the hazard lamps. Circuit Z1 provides ground for the combination flasher.

Circuit L5 from the flasher connects to the multi-function switch to supply power to the turn signals. The multi-function switch supplies voltage to the turn signals and side marker lamps on circuits L60 and L61.

Circuit L12 from the flasher connects to the multi-function switch to supply power to the hazard flasher circuits. The multi-function switch connects to the turn signal and side marker lamps on circuits L60 and L61.

TURN SIGNALS

When the operator selects the right turn signal, the multi-function switch connects power from circuit L5 to circuit L60. Circuit L60 feeds the right front and right rear turn signal lamps. Circuit L60 also splices to power the right turn signal indicator lamp on the instrument cluster.

When the operator selects the left turn signal, the multi-function switch connects power from circuit L5 to circuit L61. Circuit L61 feeds the left front and left rear turn signal lamp. Circuit L61 also splices to power the left turn signal indicator lamp on the instrument cluster.

Circuit Z1 provides ground for the turn signal lamps.

HELPFUL INFORMATION

- The turn signal lamps are the same lamps used for the hazard flasher.
- Check fuse 6 in the PDC and fuse 8 in the fuse block if the turn signals do not operate.
- Circuit F83 also connects to the heated rear window relay.

HAZARD FLASHERS

When the operator selects the hazard flashers, the multi-function switch circuit L12 from the combination flasher to circuits L60 and L61.

Circuit L60 feeds the right front and right rear turn signal lamp. Circuit L60 also splices to power the right turn signal indicator lamp on the instrument cluster.

Circuit L61 feeds the left front and left rear turn signal lamp. Circuit L61 also splices to power the left turn signal indicator lamp on the instrument cluster.

Circuit Z1 provides ground for the hazard flasher lamps.

HELPFUL INFORMATION

- The hazard flasher lamps are the same lamps used for the turn signals.
- Circuit L9 also connects to the stop lamp switch.

DIAGRAM INDEX

Component	Page
ABS Control Module	8W-52-3
Combination Flasher	8W-52-2
Fuse 4 (PDC)	8W-52-2
Fuse 6 (PDC)	8W-52-2
Fuse 8 (Fuse Block)	8W-52-2
Ignition Switch	8W-52-2
Instrument Cluster	8W-52-2
Powertrain Control Module	8W-52-3
Stop Lamp Switch	8W-52-3
Transmission Control Module	8W-52-3
Turn Signal Switch	8W-52-2

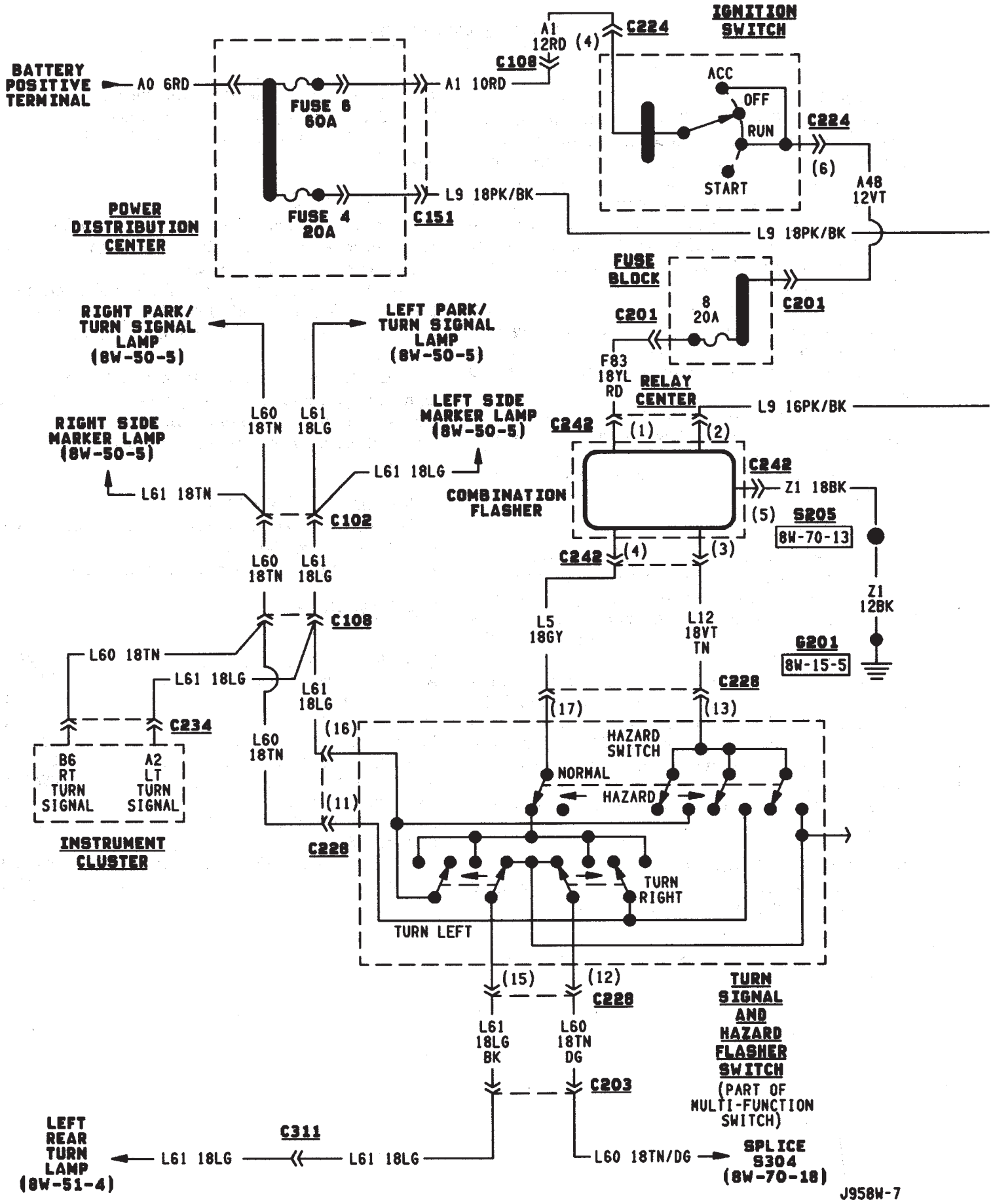
BATTERY POSITIVE TERMINAL
A0 6RD
FUSE 6 60A
FUSE 4 20A
POWER DISTRIBUTION CENTER
A1 10RD
C108
A1 12RD (4)
C224
IGNITION SWITCH
ACC
OFF
RUN
START
C224
(6)
A48 12VT
L9 18PK/BK
C151
L9 18PK/BK
FUSE BLOCK
8 20A
C201
C201
F83 18YL RD
RELAY CENTER
L9 16PK/BK
RIGHT PARK/ TURN SIGNAL LAMP (8W-50-5)
LEFT PARK/ TURN SIGNAL LAMP (8W-50-5)
LEFT SIDE MARKER LAMP (8W-50-5)
RIGHT SIDE MARKER LAMP (8W-50-5)
L60 18TN
L61 18LG
L61 18LG
L61 18TN
C102
C242
(1)
(2)
C242
COMBINATION FLASHER
Z1 18BK
(5)
S205
8W-70-13
C242
(4)
(3)
L60 18TN
L61 18LG
C108
L5 18GY
L12 18VT TN
Z1 12BK
G201
8W-15-5
L60 18TN
L61 18LG
L61 18LG
C228
(17)
(13)
C234
(16)
HAZARD SWITCH
NORMAL
HAZARD
B6 RT TURN SIGNAL
A2 LT TURN SIGNAL
INSTRUMENT CLUSTER
L60 18TN
(11)
C228
TURN RIGHT
TURN LEFT
(15)
(12)
C228
L61 18LG BK
L60 18TN DG
C203
TURN SIGNAL AND HAZARD FLASHER SWITCH
(PART OF MULTI-FUNCTION SWITCH)
LEFT REAR TURN LAMP (8W-51-4)
C311
L61 18LG
L61 18LG
L60 18TN/DG
SPLICE S304 (8W-70-18)
J958W-7

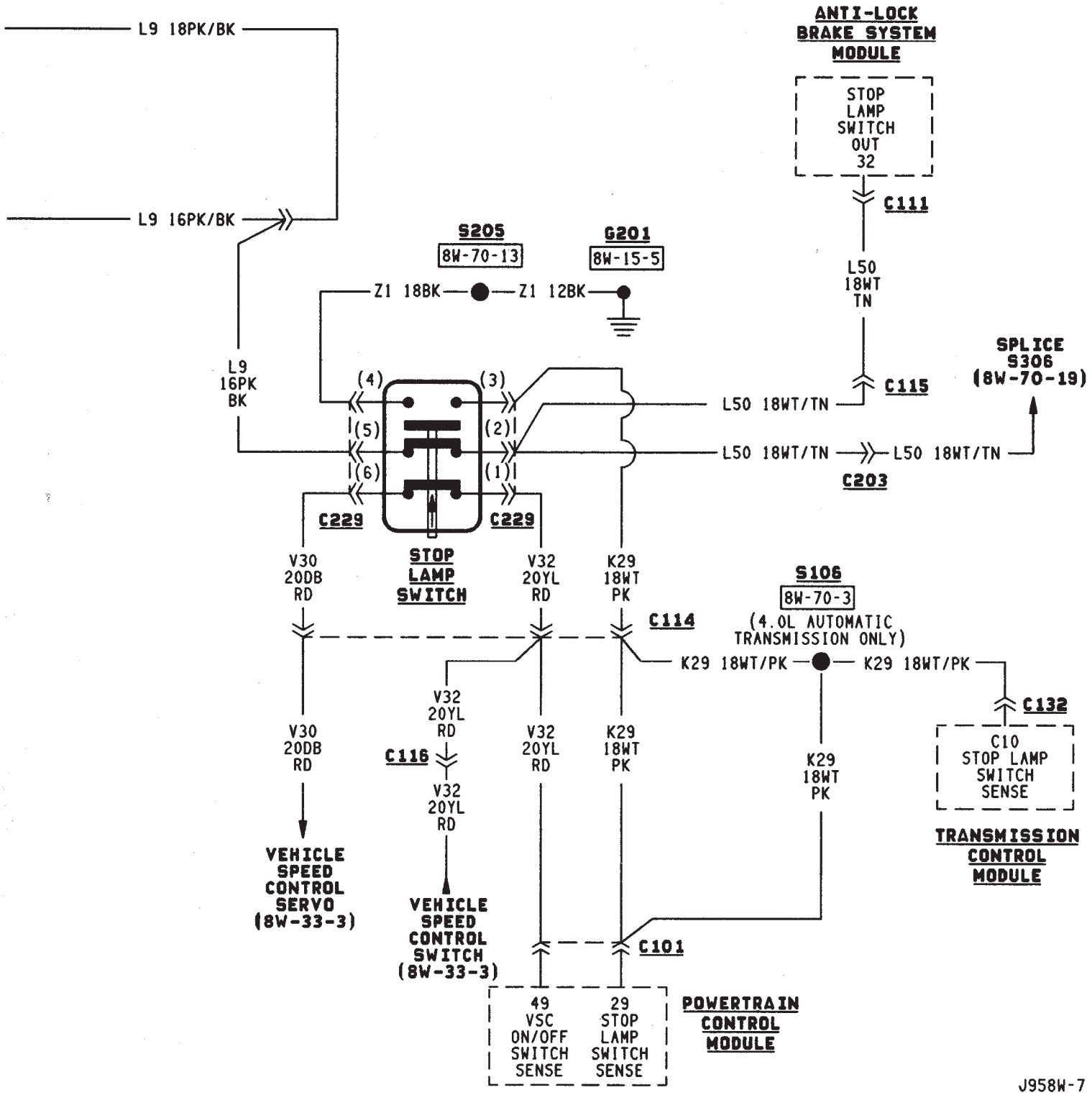
L9 18PK/BK
L9 16PK/BK
L9
16PK
BK
ANTI-LOCK
BRAKE SYSTEM
MODULE
STOP
LAMP
SWITCH
OUT
32
C111
L50
18WT
TN
S205
8W-70-13
G201
8W-15-5
Z1 18BK
Z1 12BK
C115
SPLICE
S306
(8W-70-19)
L50 18WT/TN
L50 18WT/TN
L50 18WT/TN
C203
(4)
(3)
(5)
(2)
(6)
(1)
C229
C229
STOP
LAMP
SWITCH
V30
20DB
RD
V32
20YL
RD
K29
18WT
PK
C114
S106
8W-70-3
(4.0L AUTOMATIC
TRANSMISSION ONLY)
K29 18WT/PK
K29 18WT/PK
C132
C10
STOP LAMP
SWITCH
SENSE
TRANSMISSION
CONTROL
MODULE
V30
20DB
RD
V32
20YL
RD
C116
V32
20YL
RD
V32
20YL
RD
K29
18WT
PK
K29
18WT
PK
VEHICLE
SPEED
CONTROL
SERVO
(8W-33-3)
VEHICLE
SPEED
CONTROL
SWITCH
(8W-33-3)
C101
49
VSC
ON/OFF
SWITCH
SENSE
29
STOP
LAMP
SWITCH
SENSE
POWERTRAIN
CONTROL
MODULE
J958W-7

WIPERS

INDEX

page

Diagram Index 2
Rear Wiper System 1
Wipers—Intermittent 1
Wipers—Standard 1

WIPERS—STANDARD

A circuit breaker powers the standard wiper system. The standard wiper system operates at either LOW or HIGH speeds.

In the ACCESSORY or RUN position, the ignition switch connects circuit A1 from fuse 6 in the Power Distribution Center (PDC) with circuit A48. Circuit A48 supplies voltage to circuit F86 through the circuit breaker near the left kick panel.

Circuit F86 is double crimped at the circuit breaker and supplies power to the wiper switch and the park switch in the wiper motor. Circuit Z1 from the wiper motor provides ground for the wiper motor and switch.

When the operator moves the wiper switch to the LOW position, battery voltage passes through the switch to circuit V3. Circuit V3 feeds the wiper motor low speed brushes. If the operator selects wiper HIGH speed operation, the wiper switch passes current to circuit V4. Circuit V4 feeds the wiper motor high speed brushes.

As the windshield wiper motor turns, the park switch, internal to the motor, moves from its DOWN position to the UP position. When the wiper switch is turned OFF, the V55 circuit prevents the wipers from stopping in any position but park.

The windshield washer uses a pump motor located inside the windshield washer fluid reservoir. When the washer switch is pressed, power is supplied through the wiper switch to the pump motor on circuit V10. Circuit Z1 provide ground for the pump motor.

HELPFUL INFORMATION

Circuit Z1 also provides ground for the rear wiper washer pump, radiator fan motor and front end lighting.

WIPERS—INTERMITTENT

A circuit breaker powers the standard wiper system. The intermittent wiper system operates at either LOW or HIGH or DELAY speeds.

In the ACCESSORY or RUN position, the ignition switch connects circuit A1 from fuse 6 in the PDC with circuit A48. Circuit A48 supplies voltage to circuit F86 through the circuit breaker near the left kick panel.

Circuit F86 is double crimped at the circuit breaker and supplies power to the wiper switch and the park switch in the wiper motor. Circuit Z1 from the wiper motor provides ground for the wiper motor and switch.

When the operator moves the wiper switch to the LOW position, battery voltage passes through the switch to circuit V3. Circuit V3 feeds the wiper motor low speed brushes. If the operator selects wiper HIGH speed operation, the wiper switch passes current to circuit V4. Circuit V4 feeds the wiper motor high speed brushes.

The DELAY portion of the wiper switch contains a variable resistor. The variable resistor connects to the intermittent wiper module through the wiper switch harness. The amount of delay selected by the operator determines the voltage drop through the resistor and the voltage level received by the intermittent wiper module.

After the intermittent wiper control module determines the amount of delay selected, it cycles the wipers by periodically energizing circuit V3. Circuit V3 powers the wiper motor low speed brushes.

As the windshield wiper motor turns, the park switch, internal to the motor, moves from its DOWN position to the UP position. When the wiper switch is turned OFF, the V55 circuit prevents the wipers from stopping in any position but park.

The windshield washer uses a pump motor located inside the windshield washer fluid reservoir. When the washer switch is pressed, power is supplied through the wiper switch to the pump motor on circuit V10. Circuit Z1 provides ground for the pump motor.

HELPFUL INFORMATION

Circuit Z1 also provides ground for the rear wiper washer pump, radiator fan motor and front end lighting.

REAR WIPER SYSTEM

In the RUN position, the ignition switch connects circuit A1 from fuse 6 in the PDC with circuit A38. Circuit A38 connects to a fuse block bus bar that powers circuit V15 through the fuse in cavity 1. Circuit V15 supplies power to the rear wiper switch.

In the WIPE or WASH positions, the rear wiper switch supplies voltage to the wiper motor on circuit V13. Circuit Z1 provides ground for the wiper motor.

The rear windshield washer uses a pump motor located inside the windshield washer fluid reservoir. When the rear wiper switch is pressed, power is supplied through the wiper switch to both the rear wiper and the pump motor on circuit V20. Circuit Z1 provides ground for the pump motor.

As the rear wiper motor turns, the park switch, internal to the motor, moves from the RUN position to the PARK position. When the wiper switch is turned OFF, the F20 circuit prevents the wipers from stopping in any position but park.

DIAGRAM INDEX

Component	Page
Circuit Breaker	8W-53-3, 4
Front Wiper Motor	8W-53-3, 4
Front Washer Pump Motor	8W-53-3, 5
Fuse 1 (Fuse Block)	8W-53-6
Fuse 6 (PDC)	8W-53-3, 4, 6
Fuse Block	8W-53-3, 4
Ignition Switch	8W-53-3, 4, 6
Intermittent Wiper Module	8W-53-5
Rear Washer Pump Motor	8W-53-6
Rear Wiper Motor	8W-53-6
Rear Wiper Switch	8W-53-6
Wiper Switch (Intermittent Wipers)	8W-53-5
Wiper Switch (Standard Wipers)	8W-53-3

STANDARD

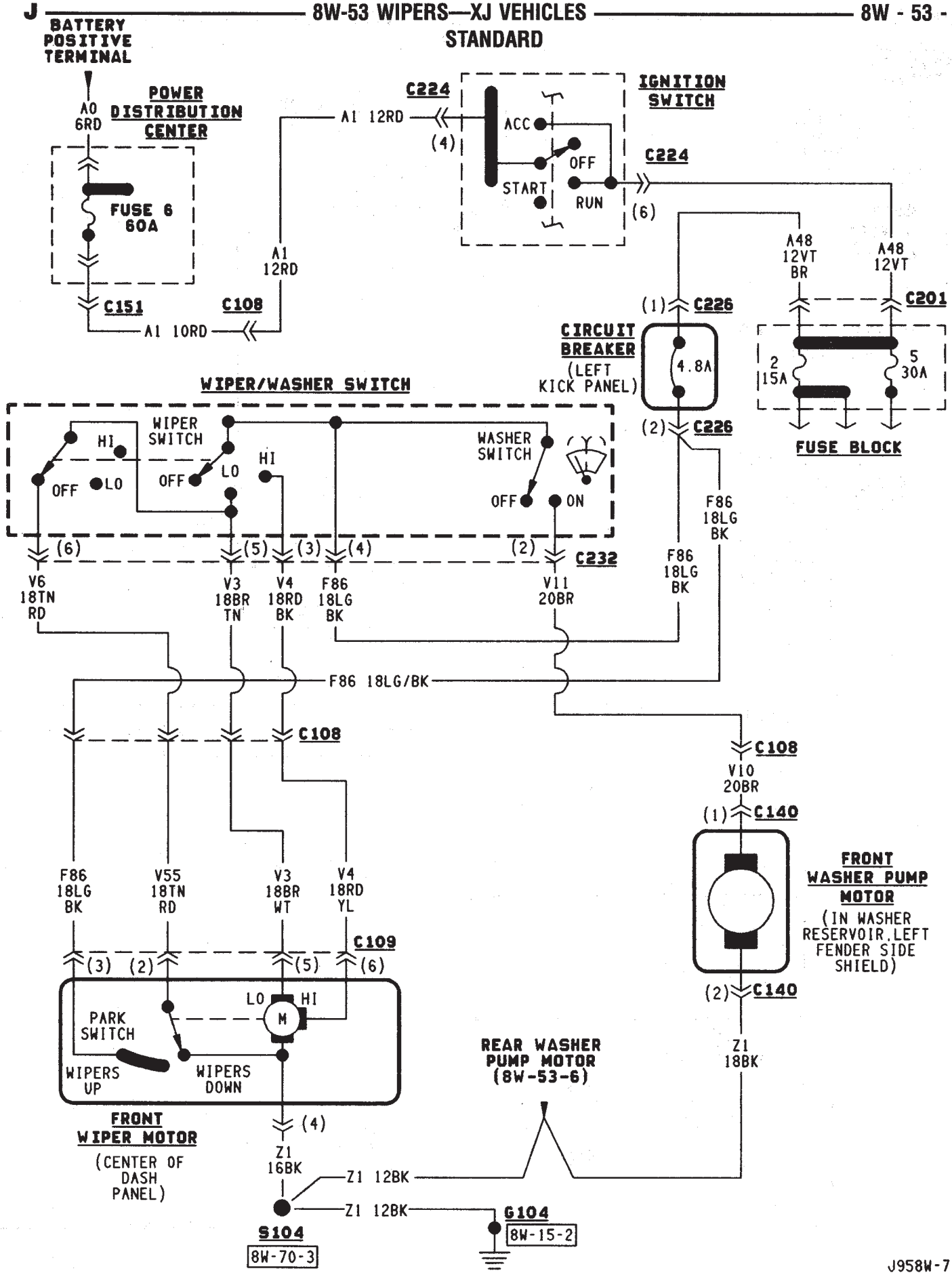
BATTERY POSITIVE TERMINAL
A0 6RD
POWER DISTRIBUTION CENTER
FUSE 6 60A
C151
A1 10RD
C108
A1 12RD
C224
A1 12RD
(4)
IGNITION SWITCH
ACC
OFF
START
RUN
C224
(6)
A48 12VT BR
A48 12VT
C201
(1) C226
CIRCUIT BREAKER (LEFT KICK PANEL)
4.8A
(2) C226
2 15A
5 30A
FUSE BLOCK
WIPER/WASHER SWITCH
WIPER SWITCH
HI
OFF
LO
HI
OFF
LO
WASHER SWITCH
OFF
ON
(6)
(5)
(3)
(4)
(2)
C232
V6 18TN RD
V3 18BR TN
V4 18RD BK
F86 18LG BK
V11 20BR
F86 18LG BK
F86 18LG BK
F86 18LG/BK
C108
C108
V10 20BR
(1) C140
FRONT WASHER PUMP MOTOR
(IN WASHER RESERVOIR, LEFT FENDER SIDE SHIELD)
(2) C140
F86 18LG BK
V55 18TN RD
V3 18BR WT
V4 18RD YL
C109
(3) (2) (5) (6)
LO
HI
M
PARK SWITCH
WIPERS UP
WIPERS DOWN
FRONT WIPER MOTOR
(CENTER OF DASH PANEL)
(4)
Z1 16BK
Z1 12BK
Z1 12BK
REAR WASHER PUMP MOTOR (8W-53-6)
Z1 18BK
S104
8W-70-3
G104
8W-15-2
J958W-7

INTERMITTENT

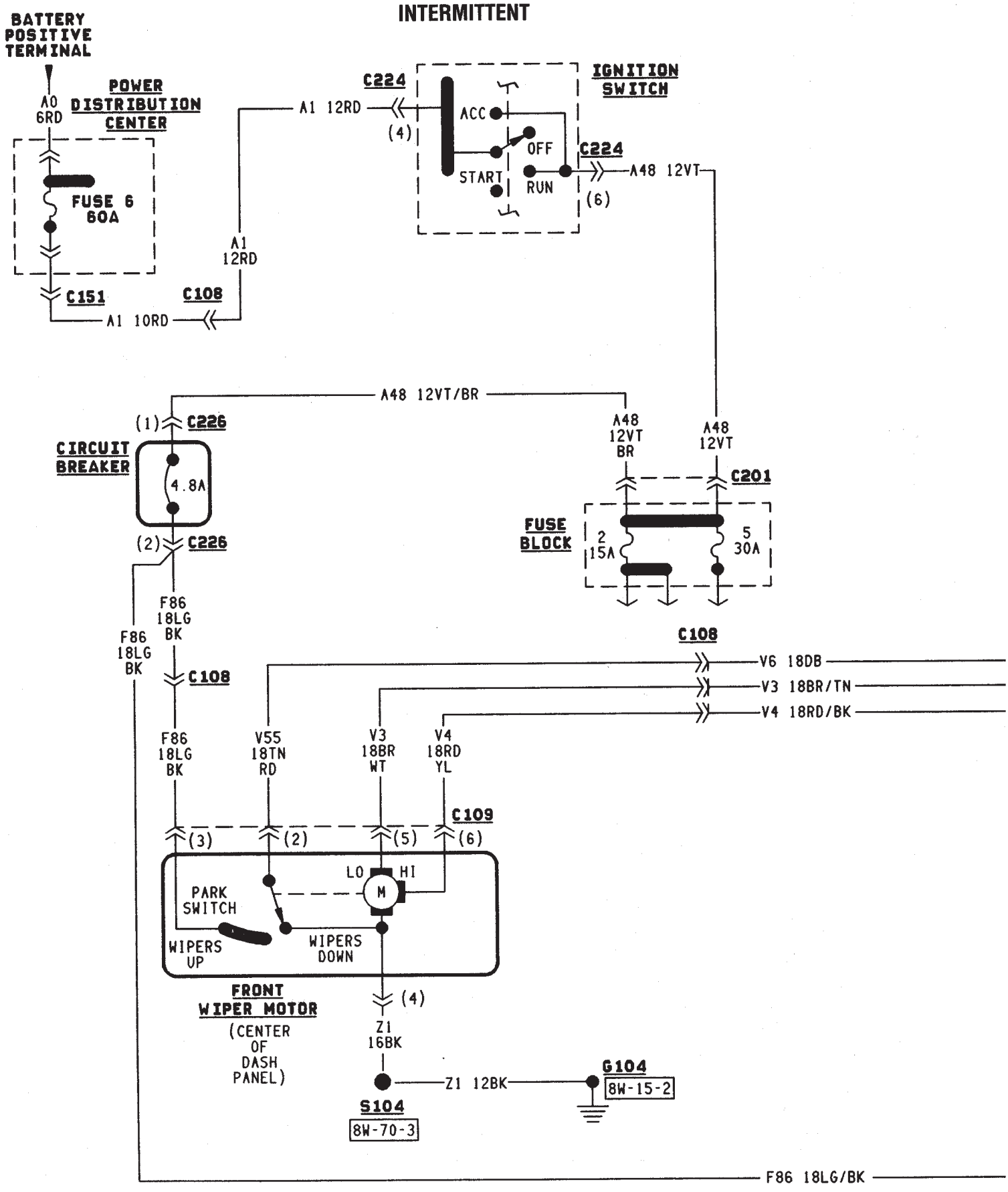

J958W-7

INTERMITTENT

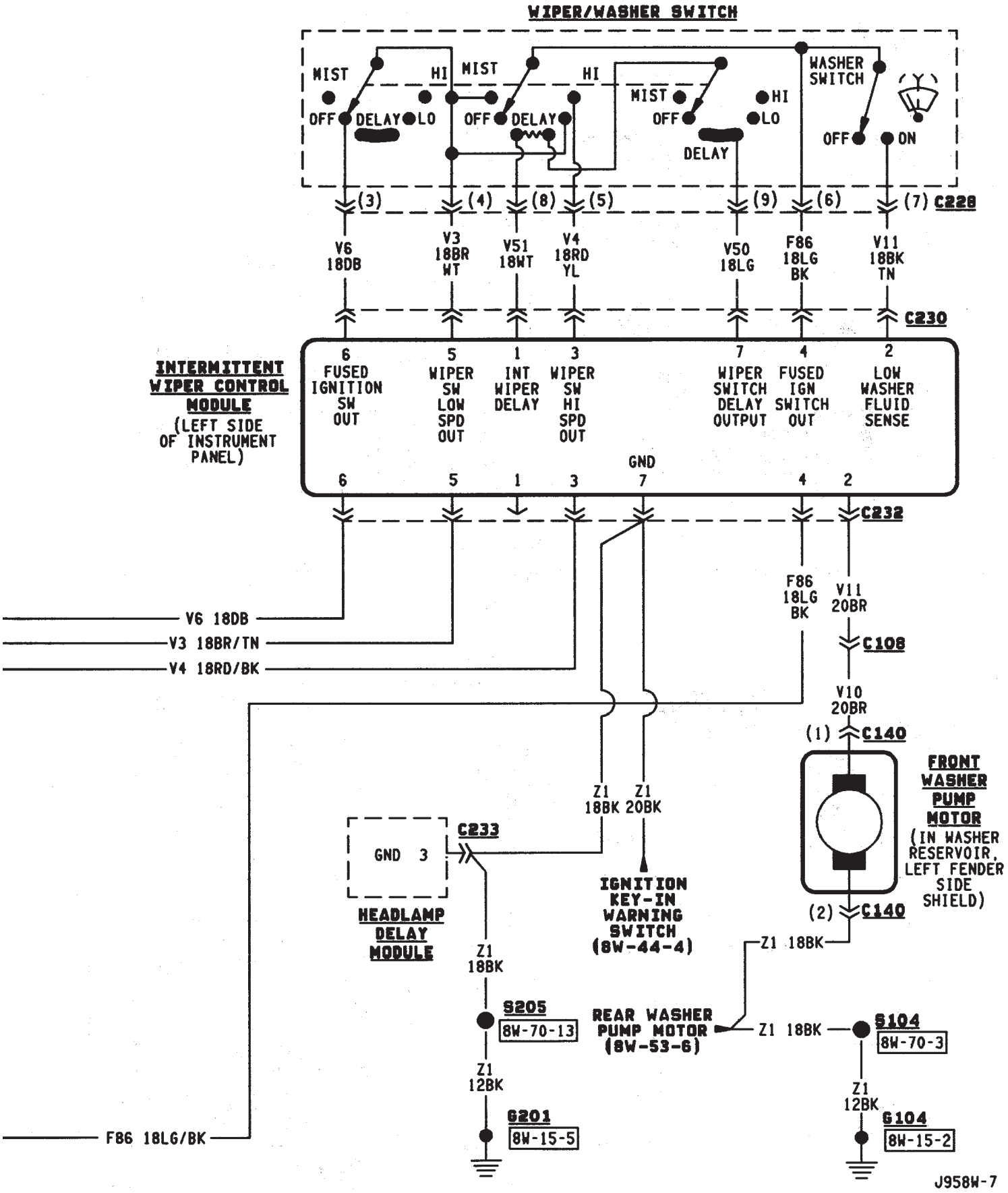

REAR

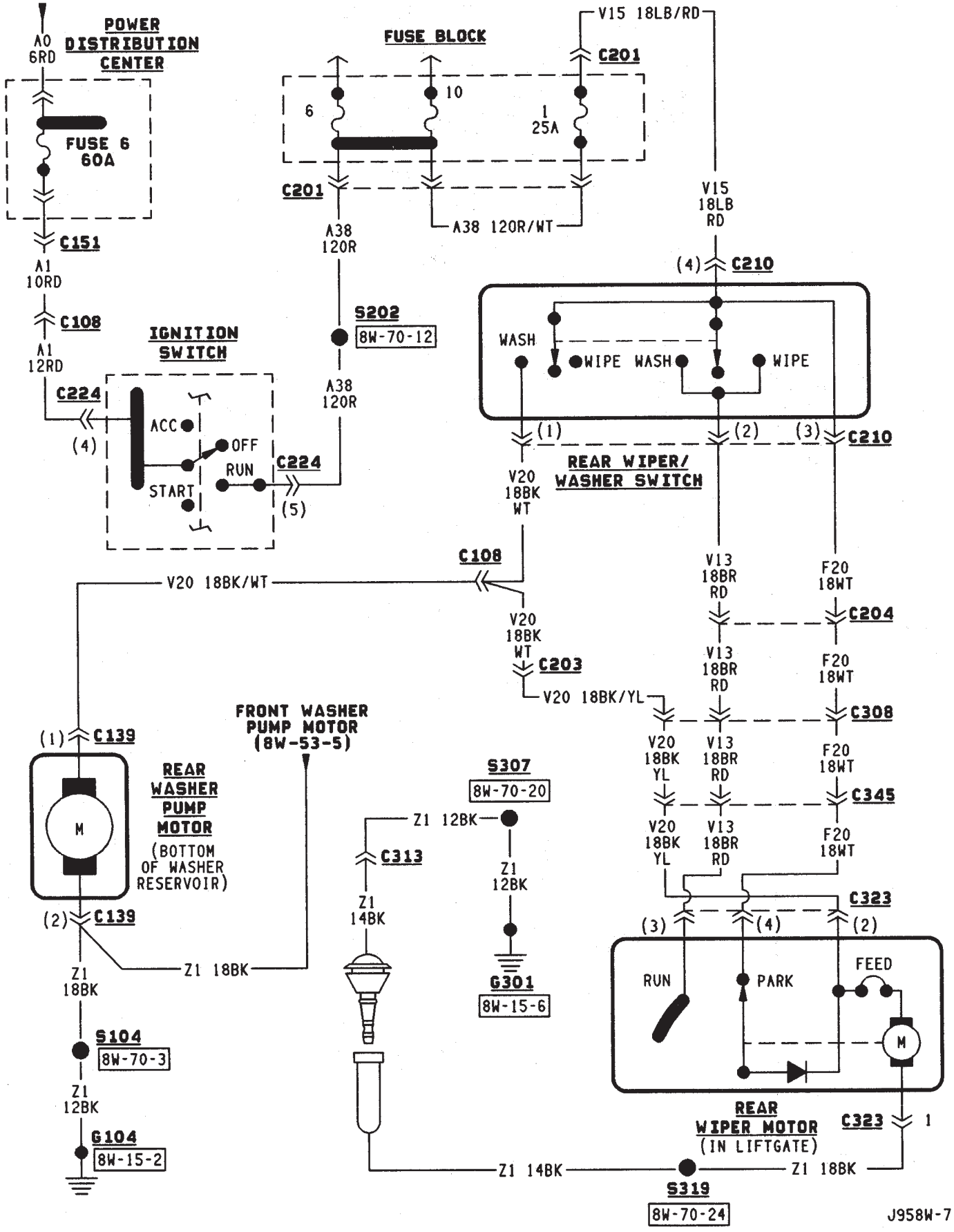
BATTERY POSITIVE TERMINAL
A0 6RD
POWER DISTRIBUTION CENTER
FUSE 6 60A
C151
A1 10RD
C108
A1 12RD
IGNITION SWITCH
C224
(4)
ACC
OFF
RUN
START
C224
(5)
FUSE BLOCK
6
10
1 25A
C201
A38 120R
A38 120R/WT
S202
8W-70-12
A38 120R
V15 18LB/RD
C201
V15 18LB RD
(4) C210
WASH
WIPE WASH
WIPE
(1)
(2)
(3) C210
REAR WIPER/ WASHER SWITCH
V20 18BK WT
C108
V20 18BK/WT
V20 18BK WT
C203
V20 18BK/YL
V13 18BR RD
F20 18WT
C204
V13 18BR RD
F20 18WT
C308
V20 18BK YL
V13 18BR RD
F20 18WT
C345
V20 18BK YL
V13 18BR RD
F20 18WT
C323
(3)
(4)
(2)
RUN
PARK
FEED
M
REAR WIPER MOTOR (IN LIFTGATE)
C323
1
Z1 18BK
S319
8W-70-24
Z1 14BK
(1) C139
M
REAR WASHER PUMP MOTOR (BOTTOM OF WASHER RESERVOIR)
(2) C139
Z1 18BK
FRONT WASHER PUMP MOTOR (8W-53-5)
Z1 18BK
S104
8W-70-3
Z1 12BK
G104
8W-15-2
S307
8W-70-20
Z1 12BK
C313
Z1 14BK
Z1 12BK
G301
8W-15-6
J958W-7

TRAILER TOW

TRAILER TOW

The factory installed trailer tow system in this vehicle uses three relays and a circuit breaker along with the trailer tow wiring connector located below the rear bumper.

Battery voltage for the trailer tow circuit breaker and relays is supplied on circuit A11. This circuit is HOT at all times and connects to the power accessory tap in the fuse block. An in line 10 amp circuit protected breaker protects circuit A11 and the trailer tow circuits. The trailer tow circuit breaker is located in the left rear quarter panel.

STOP LAMP RELAY

Power for the coil side of the stop lamp relay is supplied by circuit L50. This circuit connects to the stop lamps. Ground for the coil side is supplied on circuit Z1.

When the operator depresses the brake pedal, voltage flows through the coil of the relay to ground causing the contacts in the relay to connect circuits A11 and 95.

Circuit 95 connects to the left and right turn signal relays. Voltage flows through the closed contacts in the relays to the trailer tow connector.

RIGHT TURN RELAY

Power for the coil side of the right turn relay is supplied by circuit L60. This circuit connects to the right side turn signal lamps. Ground for the coil side of the relay is supplied on circuit Z1.

When the operator turns the right turn signal ON, power flows through the coil in the relay to ground causing the contacts in the relay to switch from there normally CLOSED position to connect circuits 94 and L60.

Circuit 94 is the feed for the contact side of the relay. Circuit L60 connects from the relay to the trailer tow connector.

Circuit 94 is fed power through the normally CLOSED side of the stop lamp relay and circuit A11. The A11 circuit is HOT at all times and protected by a 10 amp circuit breaker located in the left rear quarter panel.

LEFT TURN RELAY

Power for the coil side of the left turn relay is supplied by circuit L61. This circuit connects to the left side turn signal lamps. Ground for the coil side of the relay is supplied on circuit Z1.

When the operator turns the left turn signal ON, power flows through the coil in the relay to ground causing the contacts in the relay to switch from there normally CLOSED position to connect circuits 94 and L61.

Circuit 94 is the feed for the contact side of the relay. Circuit L61 connects from the relay to the trailer tow connector.

Circuit 94 is fed power through the normally CLOSED side of the stop lamp relay and circuit A11. The A11 circuit is HOT at all times and protected by a 10 amp circuit breaker located in the right rear quarter panel.

HELPFUL INFORMATION

- Check the In-Line circuit breaker

DIAGRAM INDEX

Component	Page
Circuit Breaker (Fuse Block Cavity 16)	8W-54-4
Circuit Breaker (In-Line)	8W-54-4
Electric Brake Provision	8W-54-2
Fuse 3 (PDC)	8W-54-4
Left Turn Signal Relay	8W-54-3
Left Back-Up Lamp	8W-54-2
Left Side Marker Lamp	8W-54-2
Left Tail/Stop Lamp	8W-54-2
Left Turn Signal Lamp	8W-54-2
Right Turn Signal Relay	8W-54-3
Stop Lamp Relay	8W-54-3
Trailer Tow Connector	8W-54-2

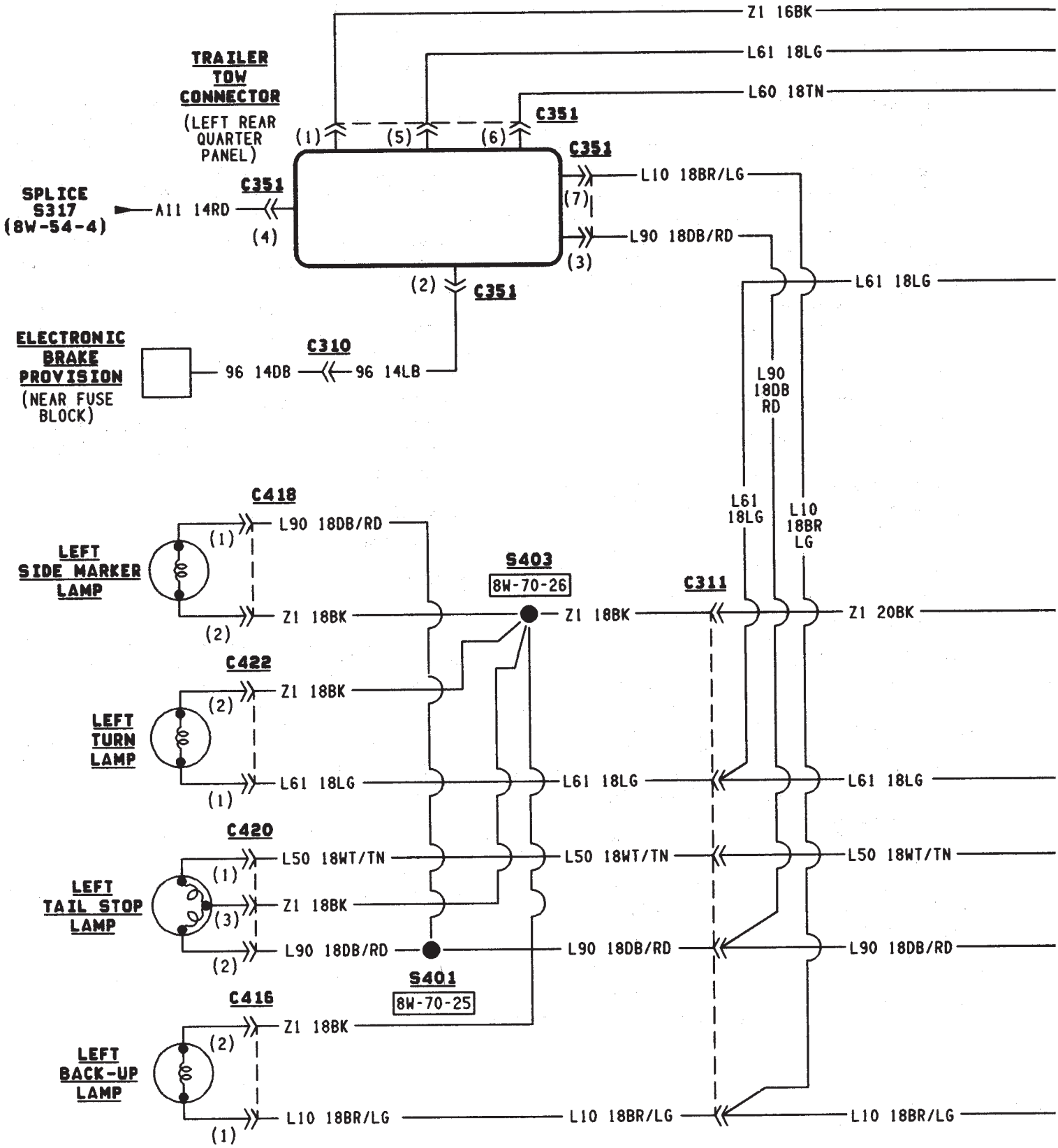
Z1 16BK
L61 18LG
L60 18TN
TRAILER TOW CONNECTOR
(LEFT REAR QUARTER PANEL)
C351
(1)
(5)
(6)
C351
L10 18BR/LG
(7)
L90 18DB/RD
(3)
SPLICE S317 (8W-54-4)
A11 14RD
C351
(4)
(2)
C351
L61 18LG
ELECTRONIC BRAKE PROVISION
(NEAR FUSE BLOCK)
C310
96 14DB
96 14LB
L90 18DB RD
L61 18LG
L10 18BR LG
C418
L90 18DB/RD
(1)
LEFT SIDE MARKER LAMP
S403
8W-70-26
C311
Z1 18BK
Z1 18BK
Z1 20BK
(2)
C422
Z1 18BK
(2)
LEFT TURN LAMP
L61 18LG
L61 18LG
L61 18LG
(1)
C420
L50 18WT/TN
L50 18WT/TN
L50 18WT/TN
(1)
LEFT TAIL STOP LAMP
Z1 18BK
(3)
L90 18DB/RD
L90 18DB/RD
L90 18DB/RD
(2)
S401
8W-70-25
C416
Z1 18BK
(2)
LEFT BACK-UP LAMP
L10 18BR/LG
L10 18BR/LG
L10 18BR/LG
(1)

J958W-7

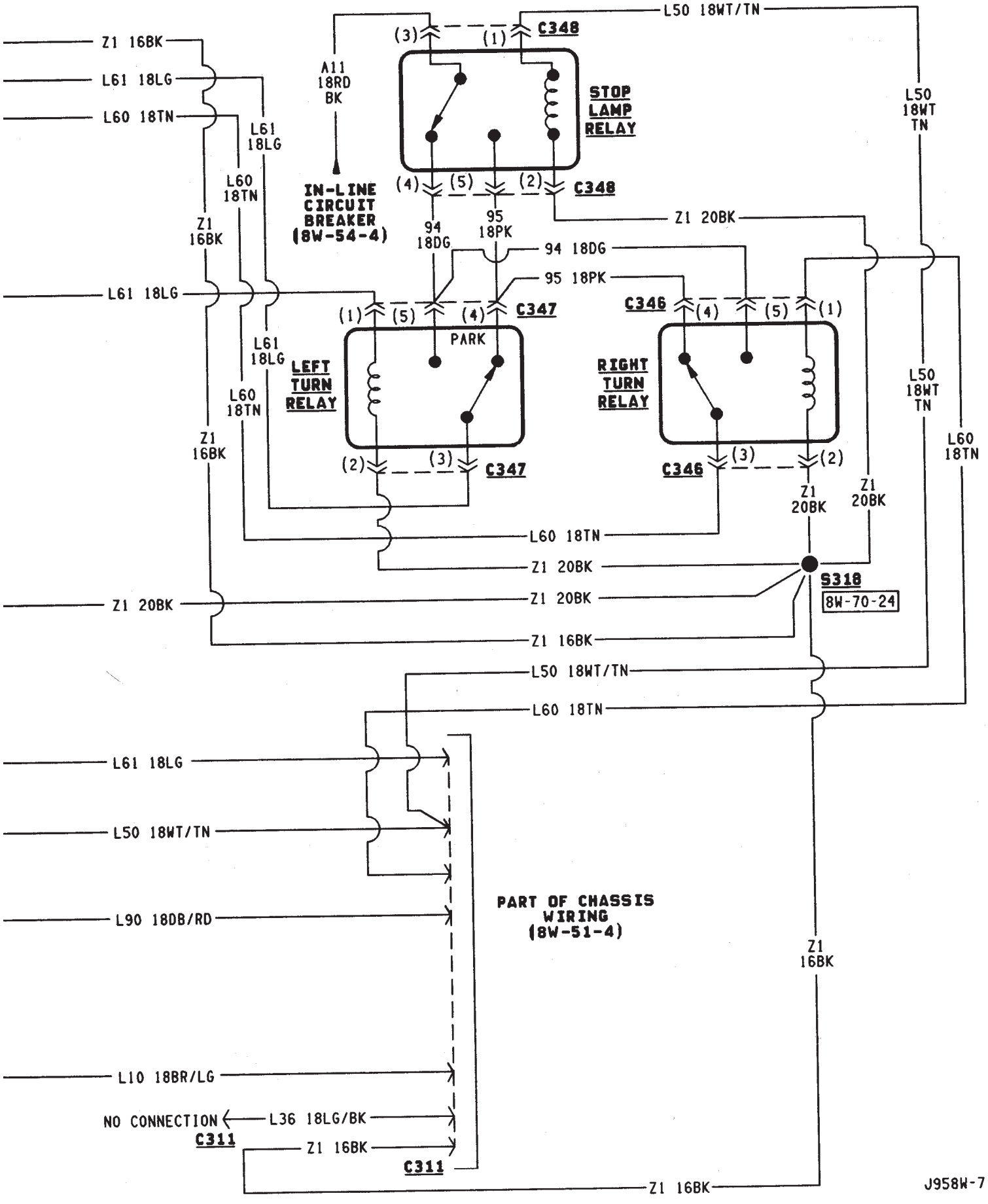
Z1 16BK
L61 18LG
L60 18TN
L61 18LG
L60 18TN
Z1 16BK
L61 18LG
Z1 16BK
L60 18TN
Z1 16BK
Z1 20BK
L10 18BR/LG
L90 18DB/RD
L50 18WT/TN
L61 18LG
A11 18RD BK
IN-LINE CIRCUIT BREAKER (8W-54-4)
C348
STOP LAMP RELAY
L50 18WT/TN
L50 18WT TN
94 18DG
95 18PK
Z1 20BK
C347
LEFT TURN RELAY
PARK
L61 18LG
L60 18TN
Z1 16BK
C346
RIGHT TURN RELAY
L50 18WT TN
L60 18TN
Z1 20BK
Z1 20BK
L60 18TN
Z1 20BK
S318
8W-70-24
Z1 20BK
Z1 16BK
L50 18WT/TN
L60 18TN
L61 18LG
L50 18WT/TN
L90 18DB/RD
PART OF CHASSIS WIRING (8W-51-4)
Z1 16BK
L10 18BR/LG
NO CONNECTION
C311
L36 18LG/BK
Z1 16BK
C311
Z1 16BK
J958W-7

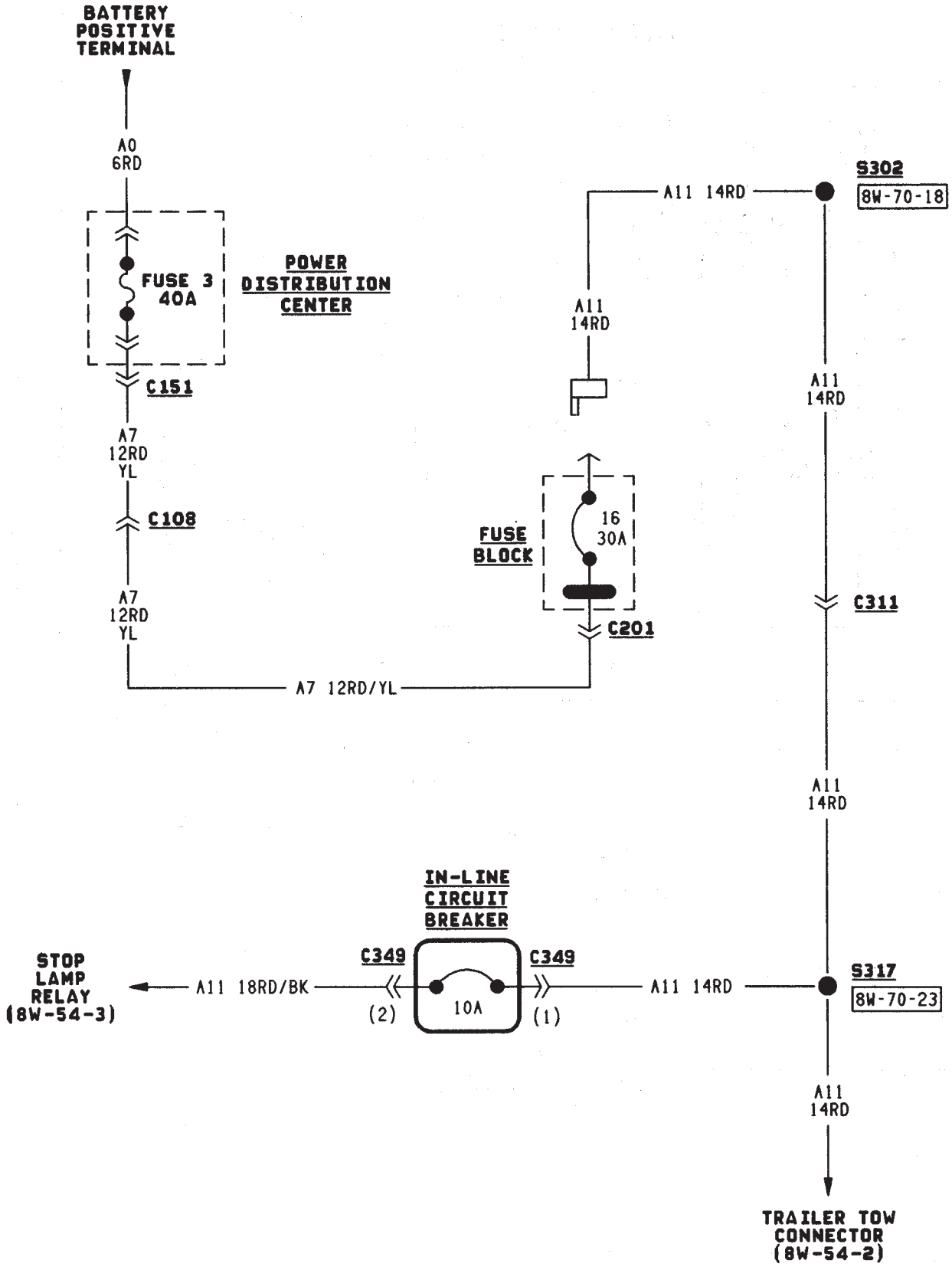
BATTERY POSITIVE TERMINAL
A0 6RD
FUSE 3 40A
POWER DISTRIBUTION CENTER
C151
A7 12RD YL
C108
A7 12RD YL
A7 12RD/YL
FUSE BLOCK
16 30A
C201
A11 14RD
S302
8W-70-18
A11 14RD
C311
A11 14RD
IN-LINE CIRCUIT BREAKER
C349
C349
10A
(2)
(1)
STOP LAMP RELAY (8W-54-3)
A11 18RD/BK
A11 14RD
S317
8W-70-23
A11 14RD
TRAILER TOW CONNECTOR (8W-54-2)

J958W-7

POWER WINDOWS

INDEX

page

Diagram Index 2
Helpful Information 2
Power Windows 1

POWER WINDOWS

The power window system is powered by circuit F81 which connects to the accessory tap in the fuse block. The accessory tap receives its feed from the ignition switch on the A38 circuit. Circuit A38 is HOT when the ignition switch is in the RUN position only.

Circuit F81 connects to the master window switch. Circuit Z1 provides ground for the power windows.

A LOCK-OUT feature is provided on the driver's door window switch. When this feature is engaged the other windows in the system will not operate.

LEFT FRONT WINDOW OPERATION

When the operator selects window DOWN operation power is supplied on the F81 circuit through the switch to circuit Q11. Circuit Q11 goes from the switch to the power window motor. Ground for the motor is supplied on the Q21 circuit back to the switch. A bus bar, internal to the switch, connects the Q21 circuit to the Z1 circuit.

For window UP operation the circuits are reversed. Circuit Q11 is the feed, and circuit Q21 is the ground.

RIGHT FRONT WINDOW OPERATION

When the DRIVER selects window DOWN operation, power is supplied on the F81 circuit through the switch to circuit Q26.

Circuit Q26 goes from the drivers door switch to the right front door switch. Power is passed through this switch to circuit Q22. The Q22 circuit then goes to the right front window motor.

Ground for the window motor is supplied on the Q12 circuit back to the right door switch. Circuity internal to the switch then passes the ground to circuit Q16. Circuit Q16 goes from the right front door switch to the master switch. A bus bar, internal to the switch, connects the Q16 circuit to the Z1 circuit.

For window UP operation the circuits are reversed. Circuits Q16 and Q12 are the feeds, and circuits Q22 and Q26 are the grounds.

If the switch is being operated from the PASSENGER'S front door, and the operator is requesting window DOWN operation, power is supplied on the Q1 circuit from the driver's master switch circuit through the switch to the Q22 circuit.

Ground for the motor is supplied on the Q12 circuit through the switch and back to the master switch on circuit Q16. A bus bar, internal to the switch, connects the Q16 circuit to the Z1 circuit.

For window UP operation, the circuits are reversed. Circuit Q12 is the power and circuit Q22 is the ground.

LEFT REAR WINDOW

When the DRIVER selects window DOWN operation power is supplied on the F81 circuit through the switch to circuit Q17.

Circuit Q17 goes from the drivers door switch to the left rear door power window switch. Power is passed through the switch to circuit Q12. The Q12 circuit then goes to the left rear window motor.

Ground for the window motor is supplied on the Q22 circuit back to the left rear door switch. Circuity internal to the switch then passes the ground to circuit Q27. Circuit Q27 goes from the left rear door switch to the master switch. A bus bar, internal to the switch, connects the Q27 circuit to the Z1 circuit.

For window UP operation the circuits are reversed. Circuits Q27, and Q22 are the feeds, and circuits Q12, and Q12 are the grounds.

If the switch is being operated from the LEFT REAR door, and the operator is requesting window DOWN operation, power is supplied on the Q1 circuit from the driver's master switch circuit through the switch to the Q22 circuit.

Ground for the motor is supplied on the Q12 circuit through the switch and to circuit Q17. Circuit Q17 connects to the master window switch. A bus bar, internal to the switch, connects the Q17 circuit to the Z1 circuit.

For window UP operation, the circuits are reversed. Circuit Q12 is the power and circuits Q22, and Q27 are the grounds.

RIGHT REAR WINDOW

When the DRIVER selects window DOWN operation, power is supplied on the F81 circuit through the switch to circuit Q18.

Circuit Q18 goes from the drivers door switch to the right rear door window switch connector where it changes to circuit Q33. Circuit Q33 connects to the right rear door window switch. Power is passed

through this switch to circuit Q22. The Q22 circuit then goes to the right rear window motor.

Ground for the window motor is supplied on the Q12 circuit back to the right rear door switch. Circuity internal to the switch then passes the ground to circuit Q28. Circuit Q28 goes from the right rear door switch to the master switch. A bus bar, internal to the switch, connects the Q28 circuit to the Z1 circuit.

For window UP operation the circuits are reversed. Circuits Q28 and Q12 are the feeds, and circuits Q22, Q33 and Q18 are the grounds.

If the switch is being operated from the RIGHT REAR door, and the operator is requesting window DOWN operation, power is supplied on the Q1 circuit from the driver's master switch circuit through the switch to the Q22 circuit.

Ground for the motor is supplied on the Q12 circuit through the switch and back to the master switch on circuit Q28. A bus bar, internal to the switch, connects the Q28 circuit to the Z1 circuit.

For window UP operation, the circuits are reversed. Circuit Q12 is the power and circuit Q22 is the ground.

HELPFUL INFORMATION

- When the ignition switch is in the RUN position, it connects circuit A1 from fuse 11 in the Power Distribution Center (PDC) to circuit A38.
- Refer to the appropriate group of the Service Manual for test procedures.

DIAGRAM INDEX

Component	Page
Circuit Breaker (Fuse Block Cavity 6)	8W-60-3
Fuse 6 (PDC)	8W-60-3
Ignition Switch	8W-60-3
Power Window Door Switches	8W-60-4
Power Window Master Switch	8W-60-3
Power Window Motors	8W-60-4

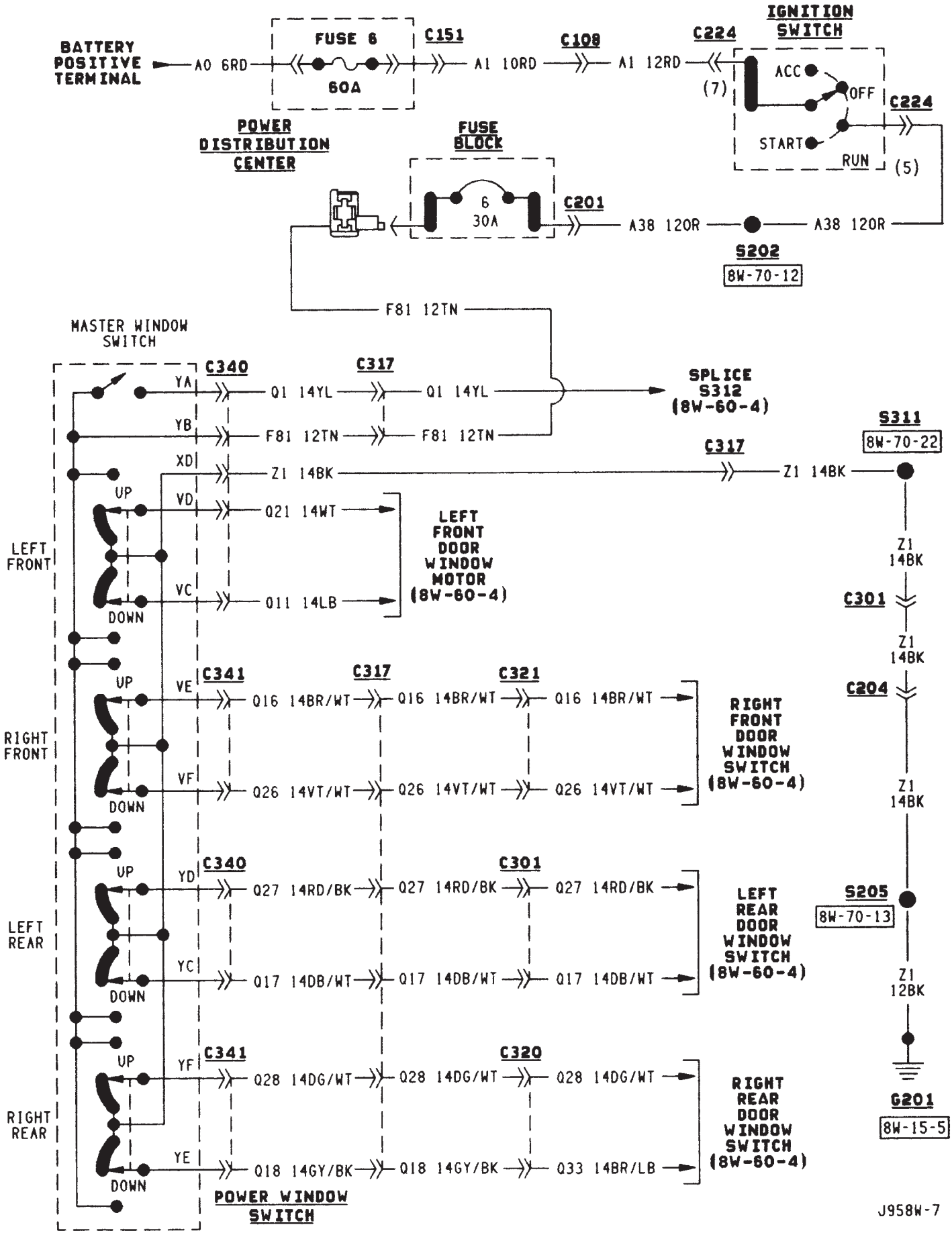
BATTERY POSITIVE TERMINAL
A0 6RD
FUSE 6
60A
C151
A1 10RD
C108
A1 12RD
C224
IGNITION SWITCH
(7)
ACC
OFF
START
RUN
C224
(5)
POWER DISTRIBUTION CENTER
FUSE BLOCK
6
30A
C201
A38 12OR
A38 12OR
S202
8W-70-12
F81 12TN
MASTER WINDOW SWITCH
C340
C317
YA
Q1 14YL
Q1 14YL
SPLICE S312 (8W-60-4)
YB
F81 12TN
F81 12TN
S311
8W-70-22
C317
XD
Z1 14BK
Z1 14BK
UP
VD
Q21 14WT
LEFT FRONT
LEFT FRONT DOOR WINDOW MOTOR (8W-60-4)
VC
Q11 14LB
DOWN
Z1 14BK
C301
Z1 14BK
C204
C341
C317
C321
UP
VE
Q16 14BR/WT
Q16 14BR/WT
Q16 14BR/WT
RIGHT FRONT
RIGHT FRONT DOOR WINDOW SWITCH (8W-60-4)
VF
Q26 14VT/WT
Q26 14VT/WT
Q26 14VT/WT
DOWN
Z1 14BK
C340
C301
UP
YD
Q27 14RD/BK
Q27 14RD/BK
Q27 14RD/BK
LEFT REAR
LEFT REAR DOOR WINDOW SWITCH (8W-60-4)
YC
Q17 14DB/WT
Q17 14DB/WT
Q17 14DB/WT
DOWN
S205
8W-70-13
Z1 12BK
C341
C320
UP
YF
Q28 14DG/WT
Q28 14DG/WT
Q28 14DG/WT
RIGHT REAR
RIGHT REAR DOOR WINDOW SWITCH (8W-60-4)
YE
Q18 14GY/BK
Q18 14GY/BK
Q33 14BR/LB
DOWN
G201
8W-15-5
POWER WINDOW SWITCH
J958W-7

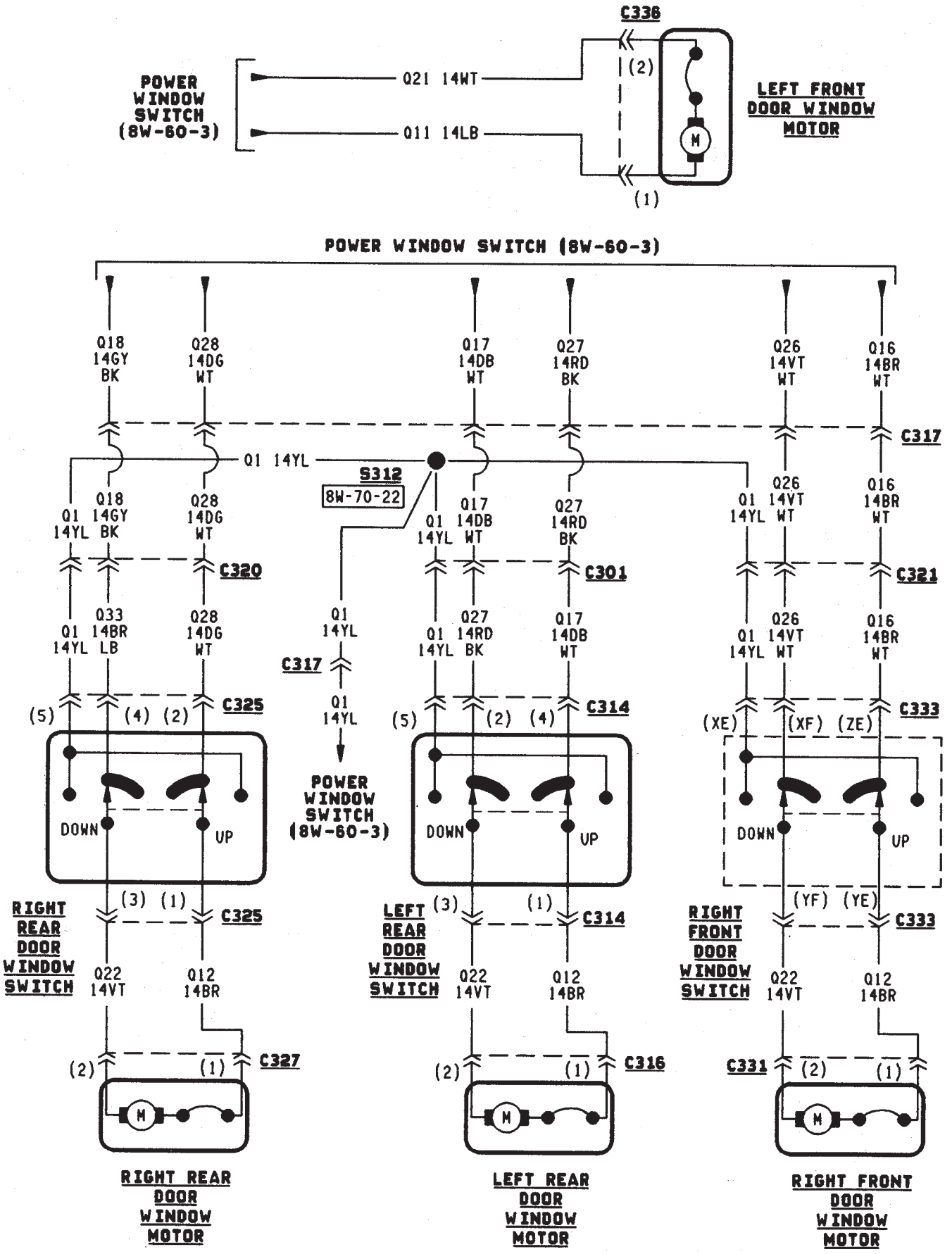
C336
POWER WINDOW SWITCH (8W-60-3)
Q21 14WT
Q11 14LB
(2)
(1)
M
LEFT FRONT DOOR WINDOW MOTOR
POWER WINDOW SWITCH (8W-60-3)
Q18 14GY BK
Q28 14DG WT
Q17 14DB WT
Q27 14RD BK
Q26 14VT WT
Q16 14BR WT
C317
Q1 14YL
S312
8W-70-22
C320
C301
C321
Q33 14BR LB
C325
C314
C333
(5)
(4)
(2)
(XE)
(XF)
(ZE)
DOWN
UP
POWER WINDOW SWITCH (8W-60-3)
(3)
(1)
(YF)
(YE)
RIGHT REAR DOOR WINDOW SWITCH
LEFT REAR DOOR WINDOW SWITCH
RIGHT FRONT DOOR WINDOW SWITCH
Q22 14VT
Q12 14BR
C327
C316
C331
RIGHT REAR DOOR WINDOW MOTOR
LEFT REAR DOOR WINDOW MOTOR
RIGHT FRONT DOOR WINDOW MOTOR
J958W-7

POWER DOOR LOCKS

POWER DOOR LOCKS

Two relays provide power for the power door lock motors. The Unlock relay provides power for the unlock circuits while the Lock relay powers the lock circuits. Either the power door lock switches or the remote keyless entry module operate the Unlock and Lock relays.

LOCK RELAY

Circuit M1 from fuse 9 in the fuse block powers circuit P38. When either power door lock switch is put in the LOCK position, the switch connects circuit P38 to circuit P35. If the operator uses Remote Keyless Entry (RKE), the RKE module powers circuit P35. In either case, circuit P35 supplies power to the coil side of the lock relay, causing the relay contacts to close. Circuit Z1 provides ground for the coil side of the lock relay.

When the lock relay contacts close, they connect battery voltage from circuit P37 to circuit P2. Circuit P2 then supplies battery voltage to the power door lock motors to LOCK the doors.

When the power doors LOCK, ground for the motors is on circuit P34 through the normally closed contacts in the door unlock relay to ground on circuit Z1.

UNLOCK RELAY

Circuit M1 from fuse 9 in the fuse block powers circuit P38. When either power door lock switch is put in the UNLOCK position, the switch connects circuit P38 to circuit P36. If the operator uses Remote Keyless Entry (RKE), the RKE module powers circuit P36. In either case, circuit P36 supplies power to the coil side of the unlock relay, causing the relay contacts to close. Circuit Z1 provides ground for the coil side of the unlock relay.

When the unlock relay contacts close, they connect battery voltage from circuit P37 to circuit P34. Circuit P34 then supplies battery voltage to the power door lock motors to UNLOCK the doors.

When the power doors UNLOCK, ground for the motors is on circuit P2 through the normally closed contacts in the door lock relay to ground on circuit Z1.

REMOTE KEYLESS ENTRY MODULE

Circuit M1 from the ignition off draw (IOD) fuse in cavity 9 of the fuse block supplies power to the Remote Keyless Entry (RKE) module. Circuit F87 from fuse 17 in the fuse block supplies power to the RKE module when the ignition switch is in the START or RUN position. Circuit Z1 provides ground for the RKE module.

The RKE module UNLOCKS the doors by energizing the unlock relay on circuit P36. Refer to Unlock Relay.

The module LOCKS the doors by energizing the lock relay on circuit P35. Refer to Lock Relay.

HELPFUL INFORMATION

- Fuse 13 in the fuse block powers circuit P37. Circuit A7 from fuse 3 in the PDC feeds fuse 13 in the fuse block.
- Circuit A7 from fuse 3 in the PDC also feeds fuse 16 in the PDC. PDC fuse 16 powers fuse 9 in the fuse block. Fuse 9 protects the M1 circuit.

DIAGRAM INDEX

Component	Page
Chime/Buzzer Module	8W-61-5
Fuse 3 (PDC)	8W-61-2, 6
Fuse 6 (PDC)	8W-61-5
Fuse 9 (Fuse Block)	8W-61-2
Fuse 11 (Fuse Block)	8W-61-2
Fuse 13 (Fuse Block)	8W-61-2
Fuse 14 (Fuse Block)	8W-61-2
Fuse 16 (PDC)	8W-61-2, 6
Fuse 17 (Fuse Block)	8W-61-5
Headlamp Delay Module	8W-61-5
Ignition Switch	8W-61-5
Liftgate Lock Motor	8W-61-4
Power Door Lock Motors	8W-61-4
Power Door Lock Relay	8W-61-3
Power Door Lock Switches	8W-61-2
Power Door Unlock Relay	8W-61-3
Remote Keyless Entry (RKE) Module	8W-61-6
Telltale Connector	8W-61-5

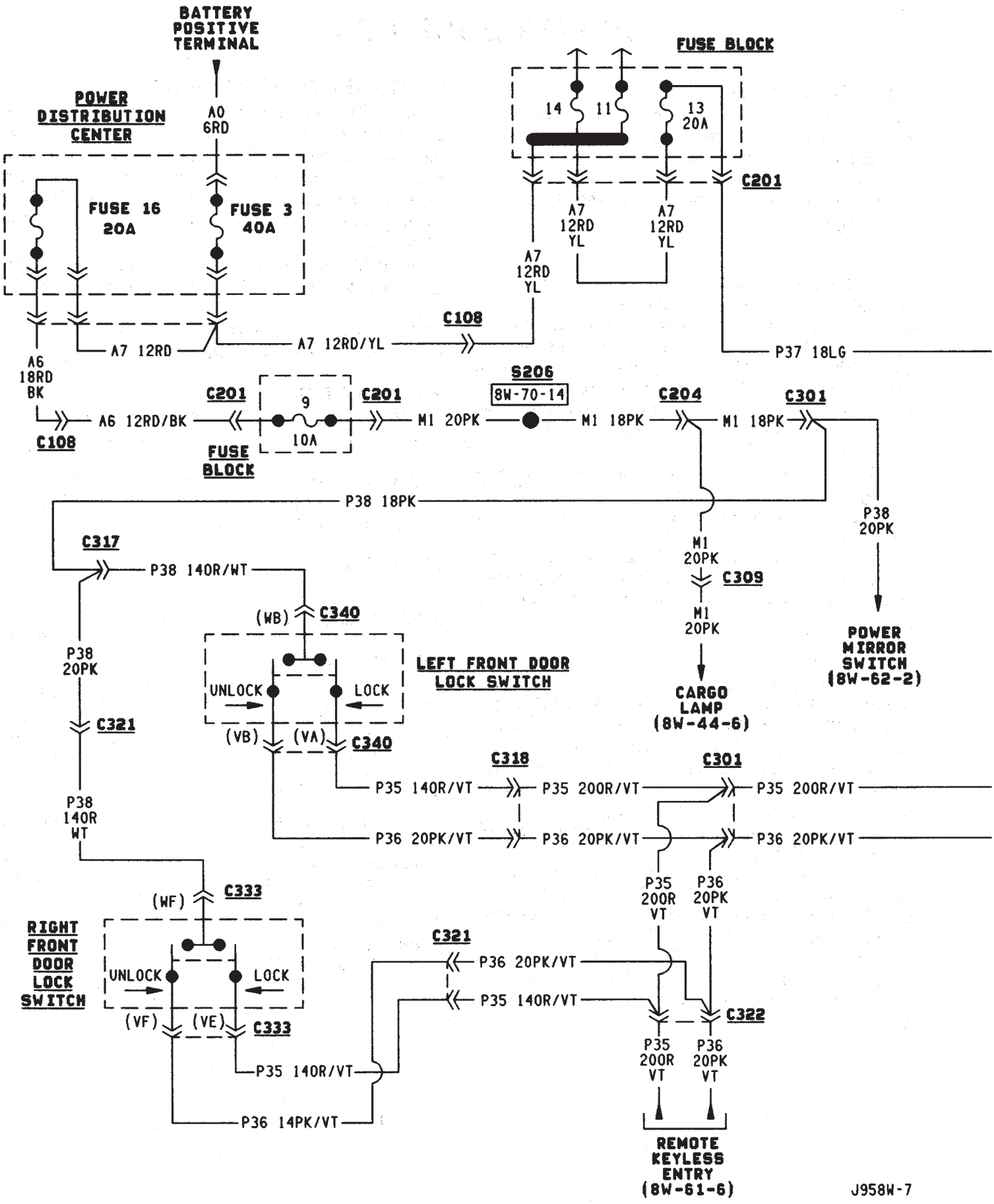
BATTERY POSITIVE TERMINAL
POWER DISTRIBUTION CENTER
A0 6RD
FUSE 16 20A
FUSE 3 40A
A7 12RD
A7 12RD/YL
C108
A6 18RD BK
A6 12RD/BK
C108
FUSE BLOCK
14
11
13 20A
C201
A7 12RD YL
A7 12RD YL
A7 12RD YL
P37 18LG
C201
9
10A
C201
FUSE BLOCK
S206
8W-70-14
M1 20PK
M1 18PK
C204
M1 18PK
C301
P38 18PK
P38 20PK
POWER MIRROR SWITCH (8W-62-2)
M1 20PK
C309
M1 20PK
CARGO LAMP (8W-44-6)
C317
P38 140R/WT
P38 20PK
C321
P38 140R WT
(WB)
C340
UNLOCK
LOCK
LEFT FRONT DOOR LOCK SWITCH
(VB)
(VA)
C340
C318
C301
P35 140R/VT
P35 200R/VT
P35 200R/VT
P36 20PK/VT
P36 20PK/VT
P36 20PK/VT
P35 200R VT
P36 20PK VT
(WF)
C333
RIGHT FRONT DOOR LOCK SWITCH
UNLOCK
LOCK
(VF)
(VE)
C333
C321
P36 20PK/VT
P35 140R/VT
C322
P35 200R VT
P36 20PK VT
P35 140R/VT
P36 14PK/VT
REMOTE KEYLESS ENTRY (8W-61-6)
J958W-7

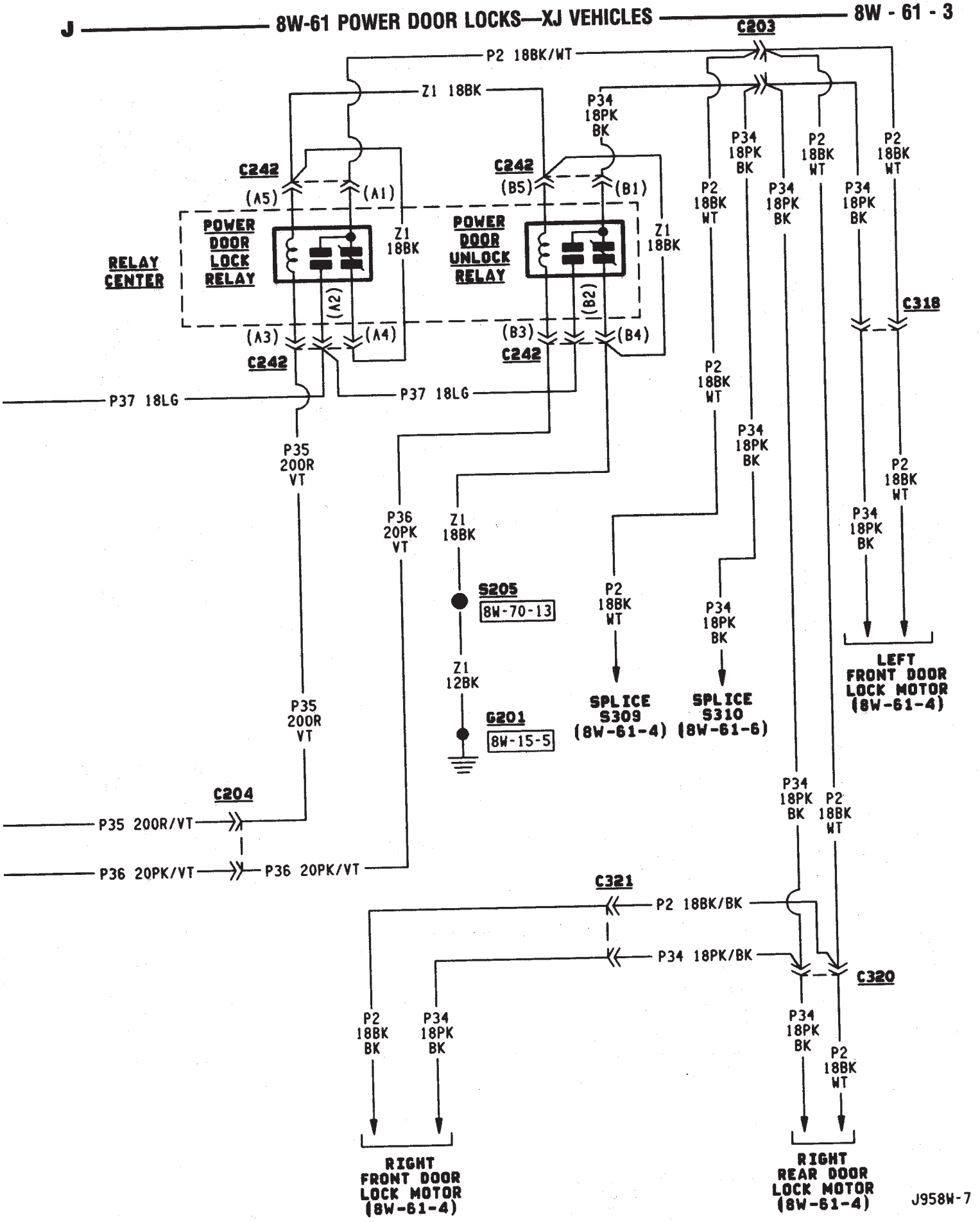
C203
P2 18BK/WT
Z1 18BK
P34 18PK BK
C242
(A5)
(A1)
C242
(B5)
(B1)
POWER DOOR LOCK RELAY
POWER DOOR UNLOCK RELAY
RELAY CENTER
Z1 18BK
Z1 18BK
(A2)
(B2)
(A3)
(A4)
(B3)
(B4)
C242
C242
P37 18LG
P37 18LG
P35 200R VT
P36 20PK VT
Z1 18BK
S205
8W-70-13
Z1 12BK
G201
8W-15-5
P2 18BK WT
P34 18PK BK
P2 18BK WT
P34 18PK BK
P2 18BK WT
P34 18PK BK
P2 18BK WT
C318
P34 18PK BK
P2 18BK WT
LEFT FRONT DOOR LOCK MOTOR (8W-61-4)
SPLICE S309 (8W-61-4)
SPLICE S310 (8W-61-6)
P35 200R VT
C204
P35 200R/VT
P36 20PK/VT
P36 20PK/VT
P34 18PK BK
P2 18BK WT
C321
P2 18BK/BK
P34 18PK/BK
C320
P2 18BK BK
P34 18PK BK
P34 18PK BK
P2 18BK WT
P2 18BK WT
RIGHT FRONT DOOR LOCK MOTOR (8W-61-4)
RIGHT REAR DOOR LOCK MOTOR (8W-61-4)
J958W-7

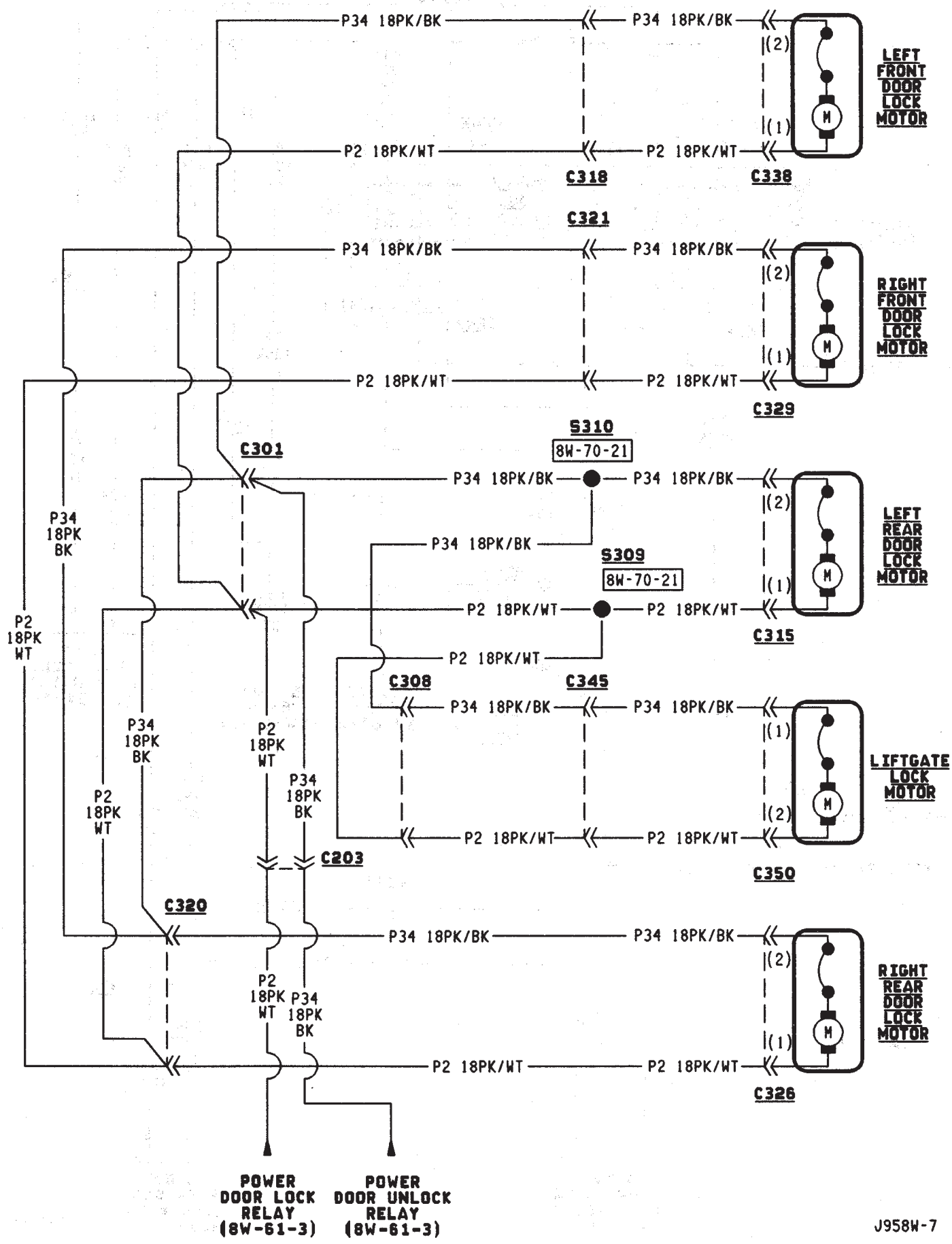
P34 18PK/BK
P2 18PK/WT
C318
C338
C321
C329
C301
S310
8W-70-21
S309
8W-70-21
C315
C308
C345
C350
C203
C320
C326
LEFT FRONT DOOR LOCK MOTOR
RIGHT FRONT DOOR LOCK MOTOR
LEFT REAR DOOR LOCK MOTOR
LIFTGATE LOCK MOTOR
RIGHT REAR DOOR LOCK MOTOR
POWER DOOR LOCK RELAY (8W-61-3)
POWER DOOR UNLOCK RELAY (8W-61-3)
J958W-7

REMOTE KEYLESS ENTRY SYSTEM

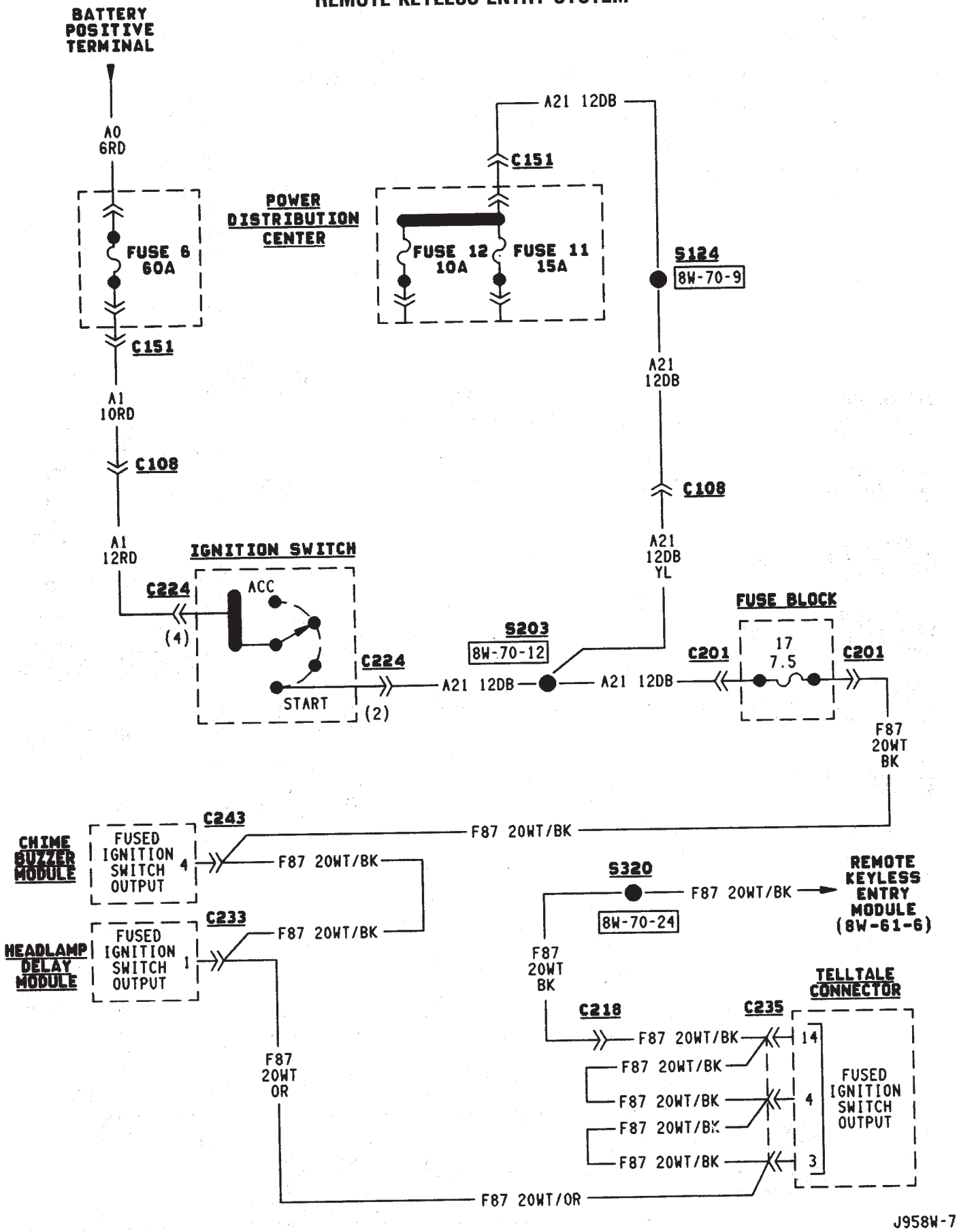

REMOTE KEYLESS ENTRY SYSTEM

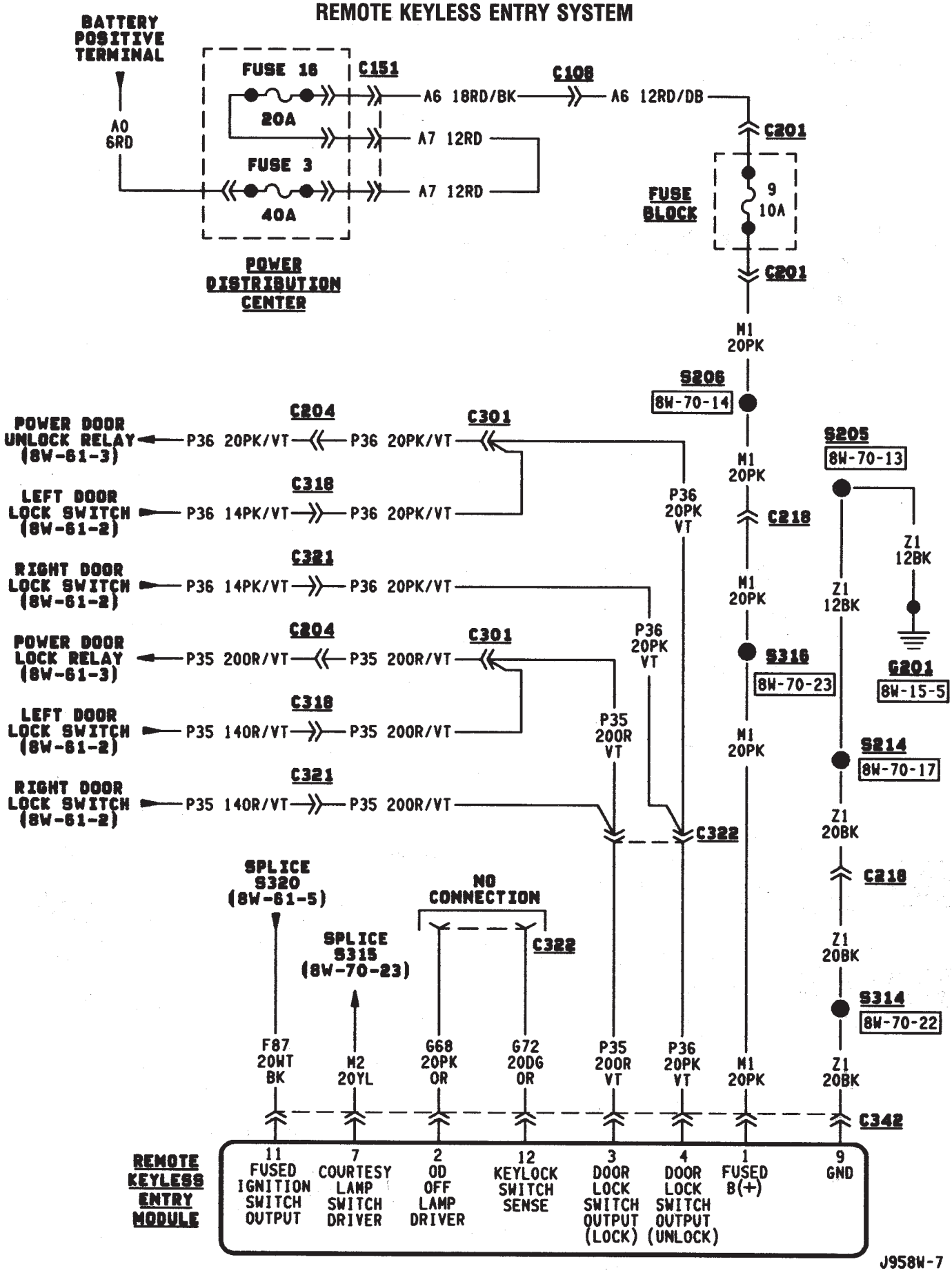

POWER MIRRORS

POWER MIRRORS

Four switches operates the left and right power mirrors. One switch selects right or left mirror. Each mirror has two motors; a LEFT/RIGHT motor and a UP/DOWN motor. The motors switch polarity to allow mirror adjustment.

Circuit A7 from fuse 3 in the Power Distribution Center (PDC) supplies battery voltage to fuse 16 in the PDC. Fuse 16 in the PDC supplies voltage to the Ignition Off Draw (IOD) fuse (fuse 9) in the fuse block. Fuse 9 supplies power to circuit M1. Circuit M1 connects to circuit P38. Circuit P38 powers the power mirror switch. Circuit Z1 connects to the power mirror switch and supplies ground for the power mirror system.

RIGHT POWER MIRROR OPERATION

In the right position, the power mirror switch supplies power to the right mirror LEFT/RIGHT motor on circuit P79 when a rightward adjustment is made. Circuit P77 provides the ground path the for rightward adjustments.

When the operator makes leftward adjustment, polarity reverses. For leftward adjustments, the switch supplies battery voltage to the right mirror LEFT/RIGHT motor on circuit P77. Circuit P79 supplies ground for leftward adjustments.

During upward adjustments, the switch supplies voltage to the right mirror UP/DOWN motor on circuit P79. Circuit P78 supplies ground during upward adjustments.

For downward adjustments, the polarity is reversed, the switch powers the right mirror UP/DOWN motor on circuit P78. Circuit P79 supplies the ground path.

LEFT POWER MIRROR OPERATION

In the left position, the power mirror switch supplies power to the left mirror LEFT/RIGHT motor on circuit P79 when a rightward adjustment is made. Circuit P81 provides the ground path the for rightward adjustments.

When the operator makes leftward adjustment, polarity reverses. For leftward adjustments, the switch supplies battery voltage the left mirror LEFT/RIGHT motor on circuit P81. Circuit P79 supplies ground for leftward adjustments.

During upward adjustments, the switch supplies voltage to the left mirror UP/DOWN motor on circuit P79. Circuit P80 supplies ground during upward adjustments.

For downward adjustments, the polarity is reversed, the switch powers the left mirror UP/DOWN motor on circuit P80. Circuit P79 supplies the ground path.

HELPFUL INFORMATION

- Check fuse 9 in the fuse block
- Check fuses 3 and 16 in the PDC

DIAGRAM INDEX

Component	Page
Fuse 3 (PDC)	8W-62-2
Fuse 9 (Fuse Block)	8W-62-2
Fuse 16 (PDC)	8W-62-2
Power Mirrors	8W-62-2
Power Mirror Switch	8W-62-2

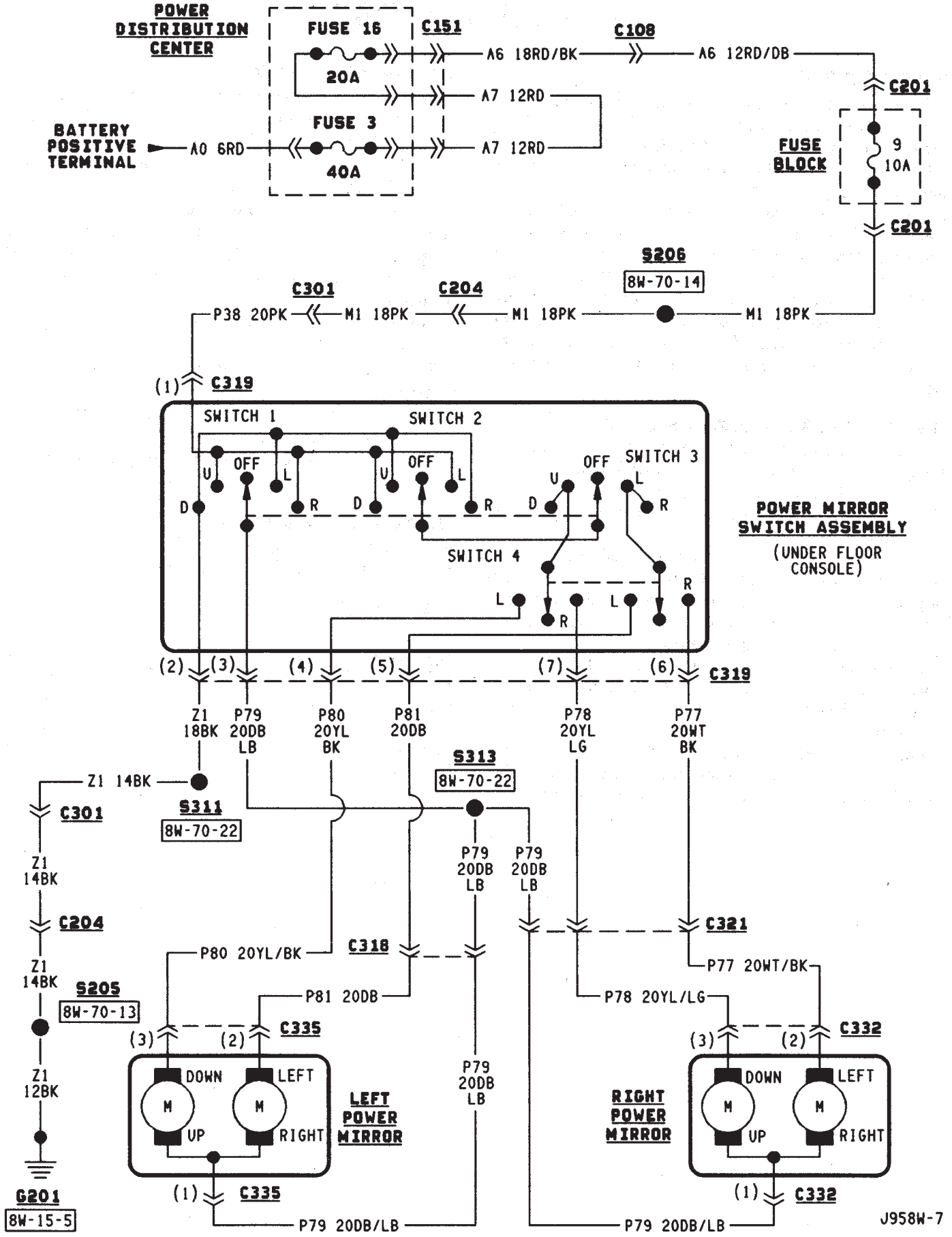
POWER DISTRIBUTION CENTER
FUSE 16
C151
20A
A6 18RD/BK
C108
A6 12RD/DB
C201
A7 12RD
FUSE 3
BATTERY POSITIVE TERMINAL
A0 6RD
40A
A7 12RD
FUSE BLOCK
9
10A
C201
S206
8W-70-14
C301
C204
P38 20PK
M1 18PK
M1 18PK
M1 18PK
(1)
C319
SWITCH 1
SWITCH 2
SWITCH 3
SWITCH 4
U
OFF
L
D
R
POWER MIRROR SWITCH ASSEMBLY
(UNDER FLOOR CONSOLE)
(2)
(3)
(4)
(5)
(7)
(6)
C319
Z1 18BK
P79 20DB LB
P80 20YL BK
P81 20DB
P78 20YL LG
P77 20WT BK
Z1 14BK
S311
8W-70-22
S313
8W-70-22
C301
Z1 14BK
C204
Z1 14BK
S205
8W-70-13
Z1 12BK
G201
8W-15-5
P79 20DB LB
P79 20DB LB
C321
P80 20YL/BK
C318
P81 20DB
P77 20WT/BK
P78 20YL/LG
(3)
(2)
C335
C332
DOWN
LEFT
UP
RIGHT
M
LEFT POWER MIRROR
RIGHT POWER MIRROR
P79 20DB/LB
(1)
C335
C332
P79 20DB/LB
P79 20DB/LB
J958W-7

POWER SEAT

POWER SEAT

Battery voltage for the power seat system is supplied by circuit A11, which is HOT at all times. This circuit connects to the power accessory tap in the fuse block and the power seat switch. The circuit breaker in cavity 16 protects circuit A11.

A BUS bar internal to the power seat switch connects the power from circuit A11 to the switches. Grounding for the seat system is supplied on circuit Z1.

The motors located under the seat are protected by circuit breakers wired in with the motors. Each motor has its own circuit breaker.

When the operator selects the FRONT VERTICAL UP function, power is passed on the A11 circuit through the closed contacts in the switch to the S5 circuit. The S5 circuit connects to the motor. Ground is provided on the S6 circuit back to the switch. A ground BUS bar internal to the switch then connects to the Z1 circuit.

For FRONT VERTICAL DOWN function the circuits are reversed. S6 is the feed and S5 is the ground.

When the operator selects the SEAT FORWARD function, power is passed on the A11 circuit through the closed contacts in the switch to the S3 circuit. The S3 circuit connects to the motor. Ground is provided on the S4 circuit back to the switch. A ground BUS bar internal to the switch then connects to the Z1 circuit.

For SEAT REARWARD function the circuits are reversed. S4 is the feed and S3 is the ground.

When the operator selects the REAR VERTICAL UP function, power is passed on the A11 circuit through the closed contacts in the switch to the S1 circuit. The S1 circuit connects to the motor. Ground is provided on the S2 circuit back to the switch. A ground BUS bar internal to the switch then connects to the Z1 circuit.

For REAR VERTICAL DOWN function the circuits are reversed. S2 is the feed and S1 is the ground.

When the operator selects the SEAT UP function power is passed on the A11 circuit through the closed contacts in the switch to the S1 and S5 circuits. The S1 circuit connects to the rear UP/DOWN motor, and S5 connects to the front UP/DOWN motor. Ground is provided on the S2 and S6 circuits back to the switch. A ground BUS bar internal to the switch then connects to the Z1 circuit.

For SEAT DOWN function the circuits are reversed. S2 and S6 circuits are the feeds and S1 and S5 are the grounds.

HELPFUL INFORMATION

- Check the 30 amp circuit breaker in cavity 16 of the fuse block.

DIAGRAM INDEX

Component	Page
Circuit Breaker (Fuse Block Cavity 16)	8W-63-2
Fuse 3 (Fuse Block)	8W-63-2
Power Seat	8W-63-2
Power Seat Switch	8W-63-2

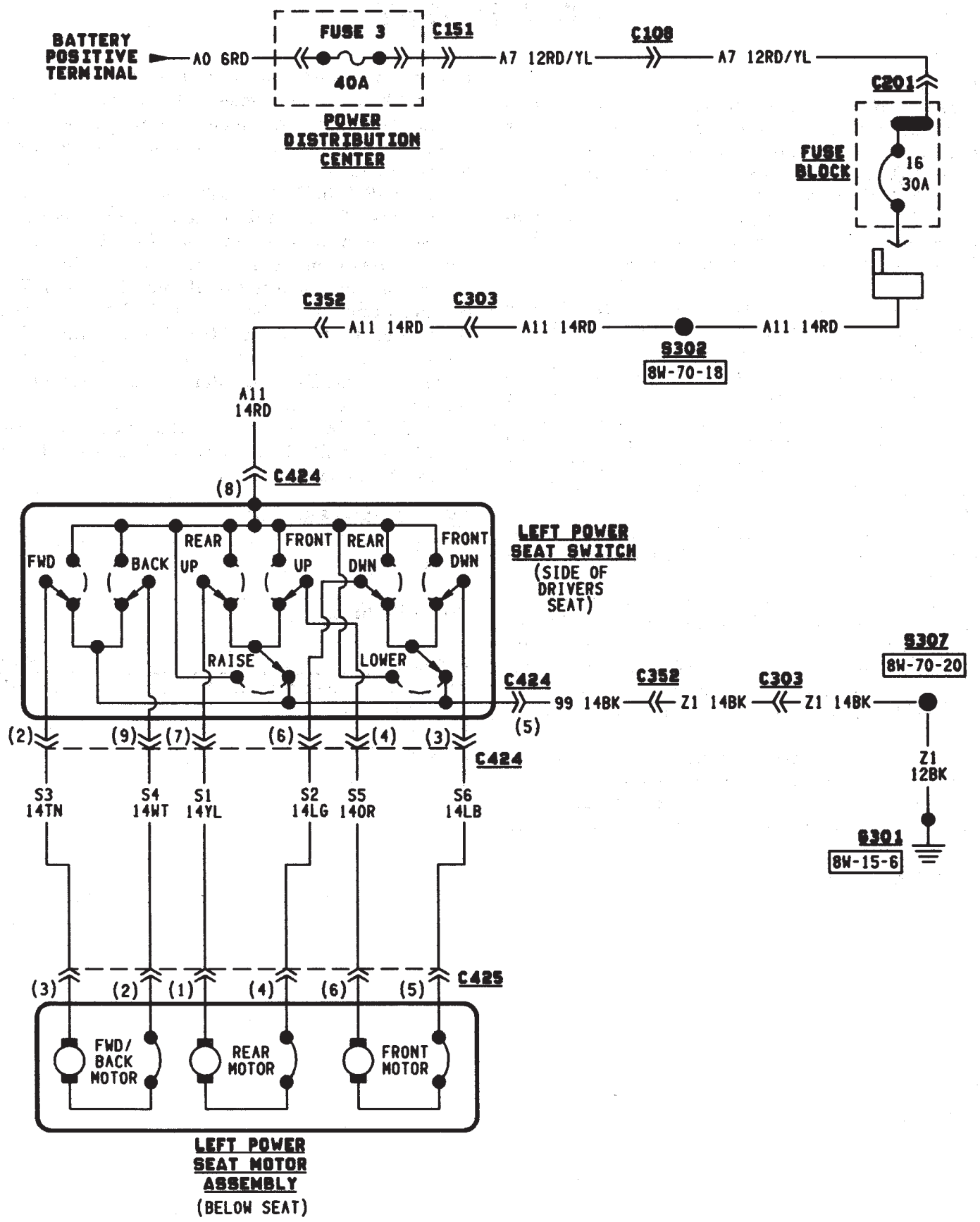
BATTERY POSITIVE TERMINAL
A0 6RD
FUSE 3
40A
C151
A7 12RD/YL
C108
A7 12RD/YL
C201
POWER DISTRIBUTION CENTER
FUSE BLOCK
16
30A
C352
C303
A11 14RD
A11 14RD
A11 14RD
S302
8W-70-18
A11 14RD
(8)
C424
FWD
BACK
REAR UP
FRONT UP
REAR DWN
FRONT DWN
RAISE
LOWER
LEFT POWER SEAT SWITCH
(SIDE OF DRIVERS SEAT)
C424
99 14BK
C352
Z1 14BK
C303
Z1 14BK
S307
8W-70-20
(5)
(2) (9) (7) (6) (4) (3)
C424
Z1 12BK
S3 14TN
S4 14WT
S1 14YL
S2 14LG
S5 14OR
S6 14LB
G301
8W-15-6
(3) (2) (1) (4) (6) (5)
C425
FWD/ BACK MOTOR
REAR MOTOR
FRONT MOTOR
LEFT POWER SEAT MOTOR ASSEMBLY
(BELOW SEAT)

J958W-7

SPLICE INFORMATION

GENERAL INFORMATION

This section identifies all splices in the wiring diagrams. It also shows the splices in their entirety. All circuits that are part of the splices are shown, and the systems they affect are referenced. For viewing the location of each splice in the vehicle, refer to Section 8W-95.

SPLICE INDEX

Component	Page
S101	8W-70-2
S102	8W-70-2
S103	8W-70-2
S104	8W-70-3
S105	8W-70-3
S106	8W-70-3
S107	8W-70-4
S108	8W-70-4
S109	8W-70-4
S110	8W-70-5
S111	8W-70-5
S112	8W-70-5
S113	8W-70-5
S114	8W-70-6
S115	8W-70-6
S116	8W-70-6
S117	8W-70-7
S118	8W-70-7
S119	8W-70-7
S120	8W-70-8
S121	8W-70-8
S122	8W-70-9
S123	8W-70-9
S124	8W-70-9
S125	8W-70-10
S126	8W-70-10
S127	8W-70-10
S128	8W-70-10
S129	8W-70-11
S130	8W-70-11
S201	8W-70-12
S202	8W-70-12
S203	8W-70-12
S204	8W-70-13
S205	8W-70-13
S206	8W-70-14
S207	8W-70-14
S208	8W-70-15
S209	8W-70-15
S210	8W-70-16
S212	8W-70-16
S213	8W-70-16
S214	8W-70-17
S215	8W-70-17
S301	8W-70-17
S302	8W-70-18
S303	8W-70-18
S304	8W-70-18
S305	8W-70-19
S306	8W-70-19
S307	8W-70-20
S308	8W-70-20
S309	8W-70-21
S310	8W-70-21
S311	8W-70-22
S312	8W-70-22
S313	8W-70-22
S314	8W-70-22
S315	8W-70-23
S316	8W-70-23
S317	8W-70-23
S318	8W-70-24
S319	8W-70-24
S320	8W-70-24
S401	8W-70-25
S402	8W-70-25
S403	8W-70-26
S404	8W-70-26

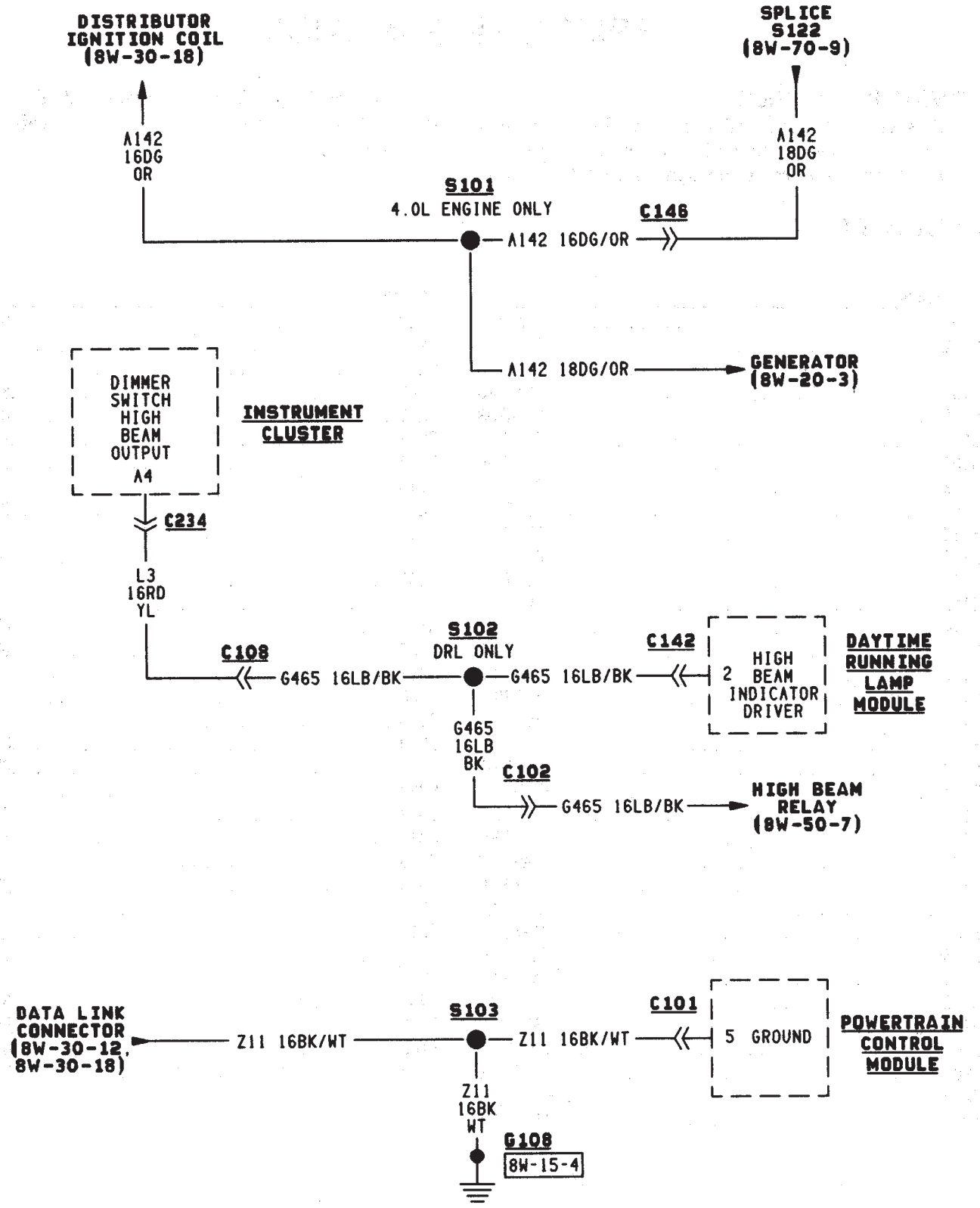
DISTRIBUTOR IGNITION COIL (8W-30-18)
A142 16DG OR
SPLICE S122 (8W-70-9)
A142 18DG OR
S101
4.0L ENGINE ONLY
C146
A142 16DG/OR
A142 18DG/OR
GENERATOR (8W-20-3)
DIMMER SWITCH HIGH BEAM OUTPUT A4
INSTRUMENT CLUSTER
C234
L3 16RD YL
C108
G465 16LB/BK
S102
DRL ONLY
G465 16LB/BK
C142
2 HIGH BEAM INDICATOR DRIVER
DAYTIME RUNNING LAMP MODULE
G465 16LB BK
C102
G465 16LB/BK
HIGH BEAM RELAY (8W-50-7)
DATA LINK CONNECTOR (8W-30-12, 8W-30-18)
Z11 16BK/WT
S103
Z11 16BK/WT
C101
5 GROUND
POWERTRAIN CONTROL MODULE
Z11 16BK WT
G108
8W-15-4

J958W-7

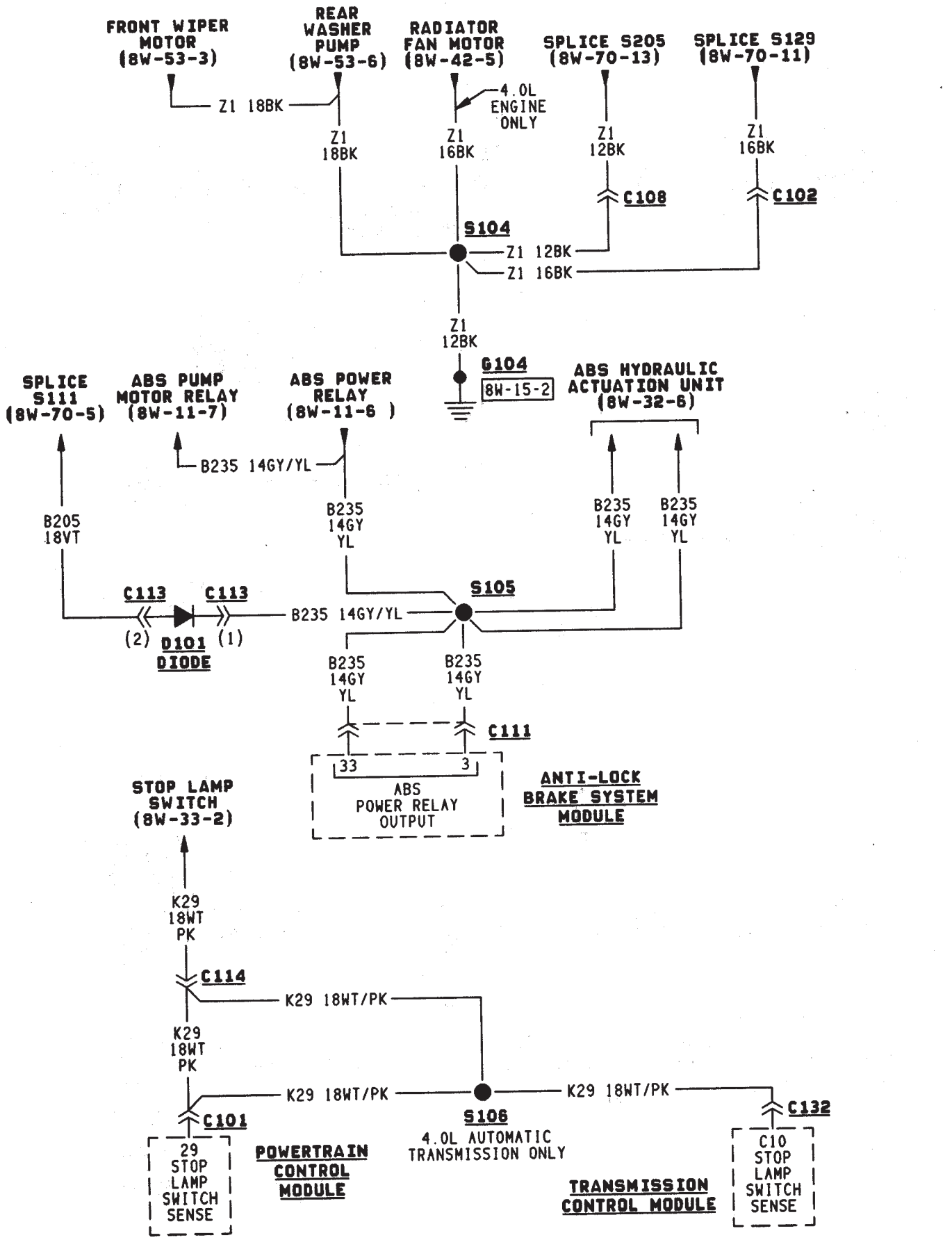
FRONT WIPER MOTOR (8W-53-3)
REAR WASHER PUMP (8W-53-6)
RADIATOR FAN MOTOR (8W-42-5)
SPLICE S205 (8W-70-13)
SPLICE S129 (8W-70-11)
Z1 18BK
4.0L ENGINE ONLY
Z1 18BK
Z1 16BK
Z1 12BK
Z1 16BK
C108
C102
S104
Z1 12BK
Z1 16BK
Z1 12BK
G104
8W-15-2
SPLICE S111 (8W-70-5)
ABS PUMP MOTOR RELAY (8W-11-7)
ABS POWER RELAY (8W-11-6)
ABS HYDRAULIC ACTUATION UNIT (8W-32-6)
B235 14GY/YL
B205 18VT
B235 14GY YL
B235 14GY YL
B235 14GY YL
C113
C113
(2)
D101
DIODE
(1)
B235 14GY/YL
S105
B235 14GY YL
B235 14GY YL
C111
33
3
ABS POWER RELAY OUTPUT
ANTI-LOCK BRAKE SYSTEM MODULE
STOP LAMP SWITCH (8W-33-2)
K29 18WT PK
C114
K29 18WT/PK
K29 18WT PK
K29 18WT/PK
K29 18WT/PK
C101
C132
S106
4.0L AUTOMATIC TRANSMISSION ONLY
29 STOP LAMP SWITCH SENSE
POWERTRAIN CONTROL MODULE
TRANSMISSION CONTROL MODULE
C10 STOP LAMP SWITCH SENSE

J958W-7

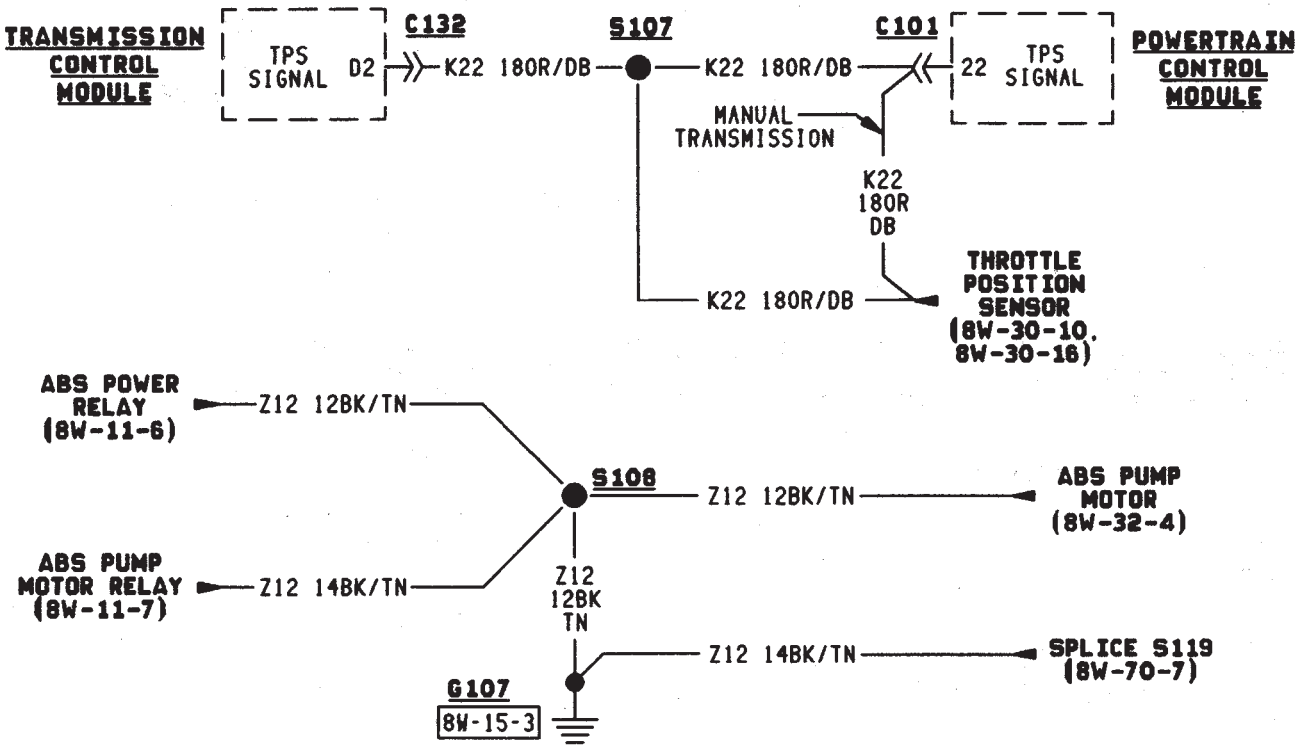
TRANSMISSION CONTROL MODULE
TPS SIGNAL
D2
C132
K22 18OR/DB
S107
K22 18OR/DB
C101
22
TPS SIGNAL
POWERTRAIN CONTROL MODULE
MANUAL TRANSMISSION
K22 18OR DB
THROTTLE POSITION SENSOR (8W-30-10, 8W-30-16)
K22 18OR/DB
ABS POWER RELAY (8W-11-6)
Z12 12BK/TN
S108
Z12 12BK/TN
ABS PUMP MOTOR (8W-32-4)
ABS PUMP MOTOR RELAY (8W-11-7)
Z12 14BK/TN
Z12 12BK TN
Z12 14BK/TN
SPLICE S119 (8W-70-7)
G107
8W-15-3

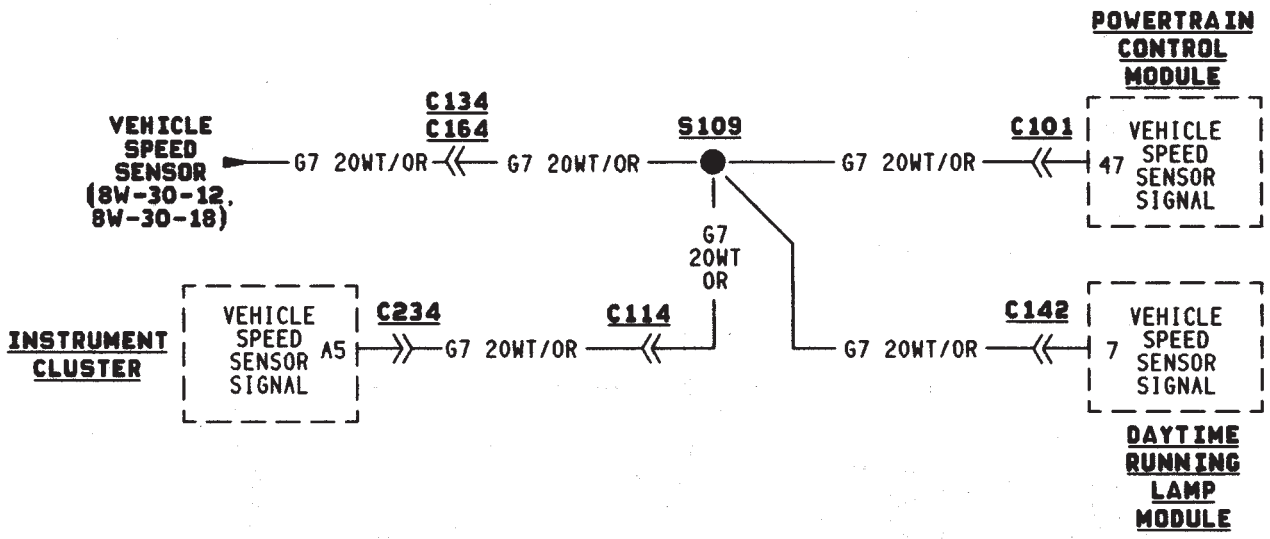
POWERTRAIN CONTROL MODULE
VEHICLE SPEED SENSOR (8W-30-12, 8W-30-18)
C134
C164
G7 20WT/OR
G7 20WT/OR
S109
G7 20WT/OR
C101
47
VEHICLE SPEED SENSOR SIGNAL
G7 20WT OR
INSTRUMENT CLUSTER
VEHICLE SPEED SENSOR SIGNAL
A5
C234
G7 20WT/OR
C114
C142
G7 20WT/OR
7
VEHICLE SPEED SENSOR SIGNAL
DAYTIME RUNNING LAMP MODULE

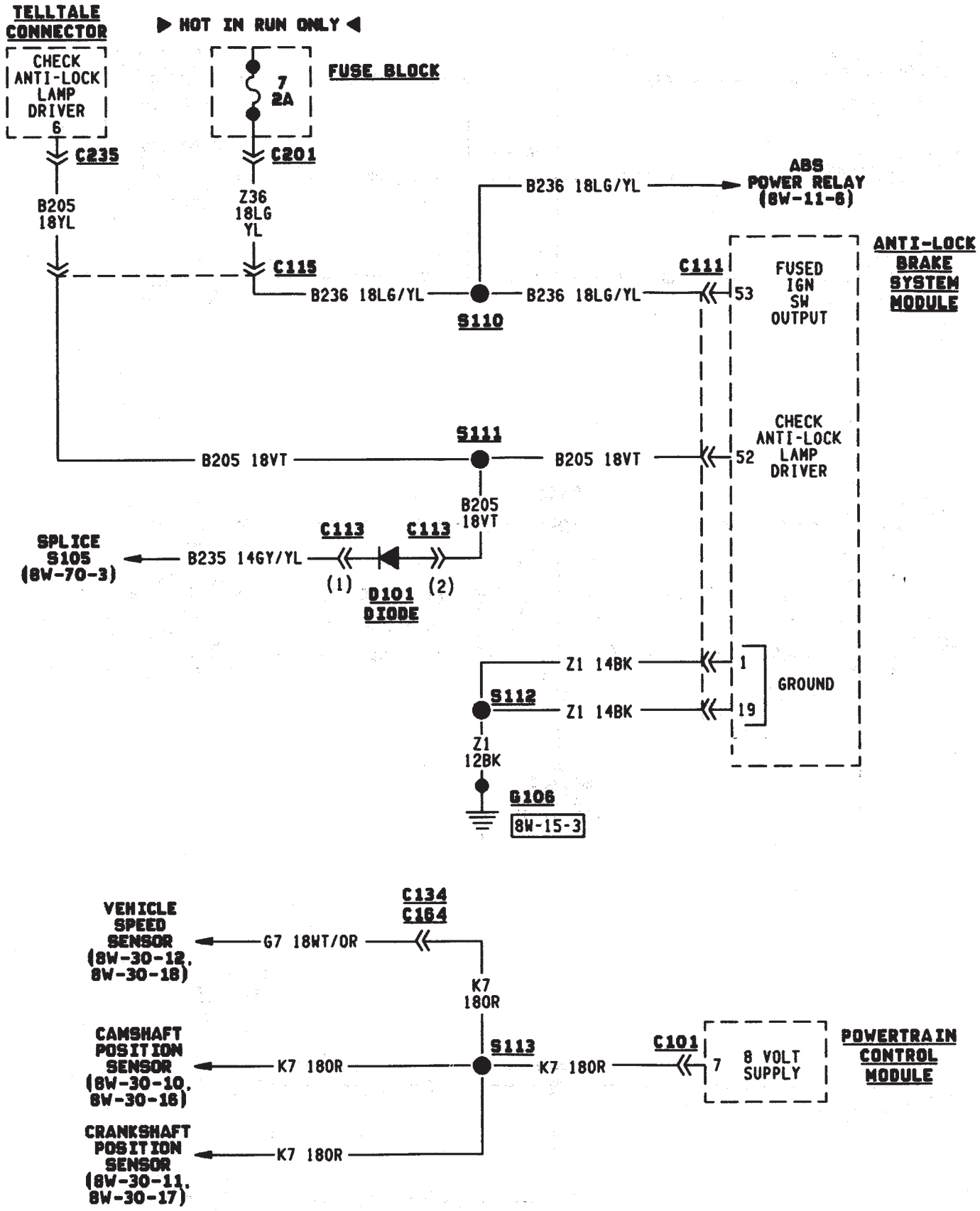
TELLTALE CONNECTOR
CHECK ANTI-LOCK LAMP DRIVER 6
C235
B205 18YL
▶ HOT IN RUN ONLY ◀
7 2A
FUSE BLOCK
C201
Z36 18LG YL
C115
B236 18LG/YL
B236 18LG/YL
S110
B236 18LG/YL
ABS POWER RELAY (8W-11-6)
C111
53
FUSED IGN SW OUTPUT
ANTI-LOCK BRAKE SYSTEM MODULE
S111
B205 18VT
B205 18VT
52
CHECK ANTI-LOCK LAMP DRIVER
B205 18VT
C113
C113
SPLICE S105 (8W-70-3)
B235 14GY/YL
(1)
D101 DIODE
(2)
Z1 14BK
1
GROUND
S112
Z1 14BK
19
Z1 12BK
G106
8W-15-3
C134
C164
VEHICLE SPEED SENSOR (8W-30-12, 8W-30-18)
G7 18WT/OR
K7 18OR
CAMSHAFT POSITION SENSOR (8W-30-10, 8W-30-18)
K7 18OR
S113
K7 18OR
C101
7
8 VOLT SUPPLY
POWERTRAIN CONTROL MODULE
CRANKSHAFT POSITION SENSOR (8W-30-11, 8W-30-17)
K7 18OR

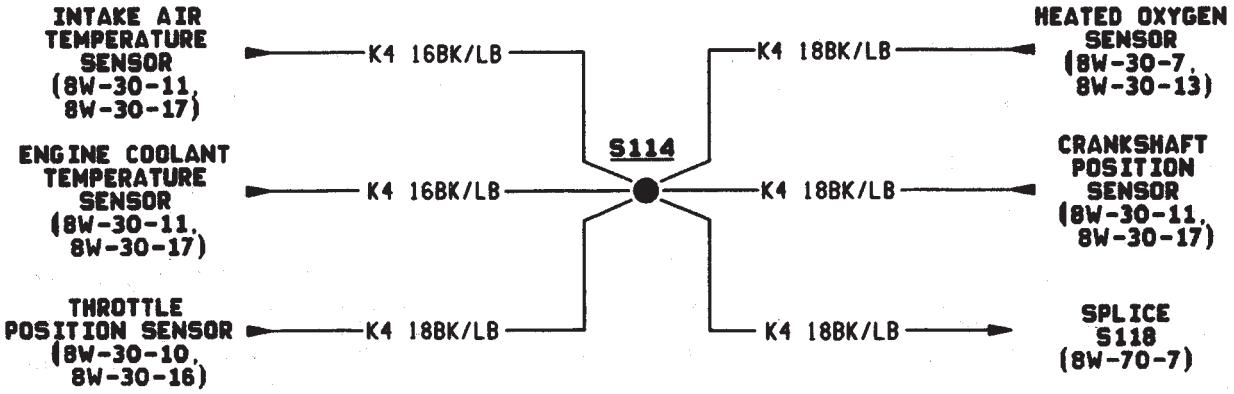
INTAKE AIR TEMPERATURE SENSOR (8W-30-11, 8W-30-17)
K4 16BK/LB
ENGINE COOLANT TEMPERATURE SENSOR (8W-30-11, 8W-30-17)
K4 16BK/LB
THROTTLE POSITION SENSOR (8W-30-10, 8W-30-16)
K4 18BK/LB
S114
K4 18BK/LB
HEATED OXYGEN SENSOR (8W-30-7, 8W-30-13)
K4 18BK/LB
CRANKSHAFT POSITION SENSOR (8W-30-11, 8W-30-17)
K4 18BK/LB
SPLICE S118 (8W-70-7)

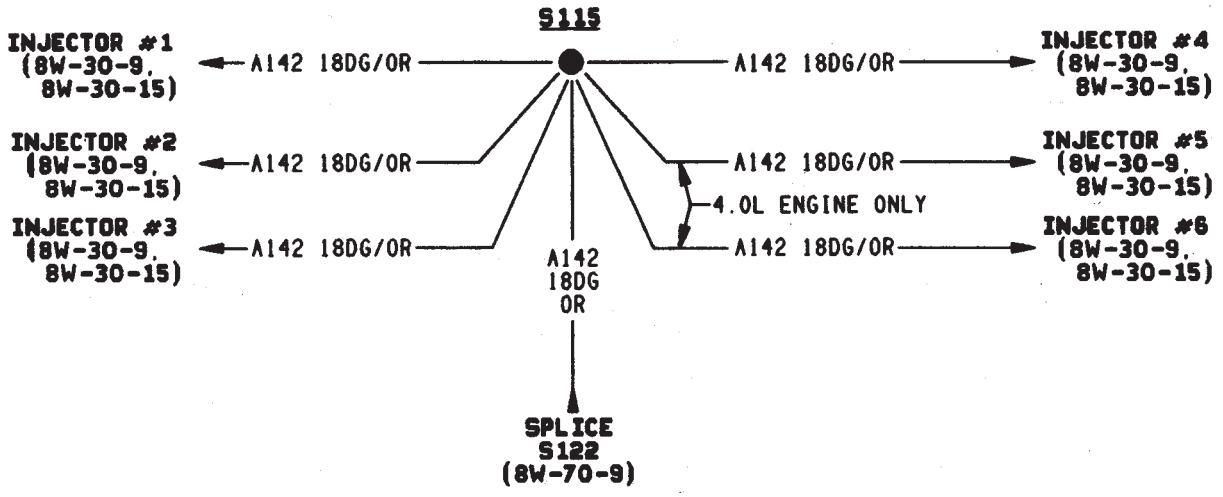
S115
INJECTOR #1 (8W-30-9, 8W-30-15)
A142 18DG/OR
INJECTOR #2 (8W-30-9, 8W-30-15)
A142 18DG/OR
INJECTOR #3 (8W-30-9, 8W-30-15)
A142 18DG/OR
A142 18DG OR
SPLICE S122 (8W-70-9)
A142 18DG/OR
INJECTOR #4 (8W-30-9, 8W-30-15)
A142 18DG/OR
INJECTOR #5 (8W-30-9, 8W-30-15)
4.0L ENGINE ONLY
A142 18DG/OR
INJECTOR #6 (8W-30-9, 8W-30-15)

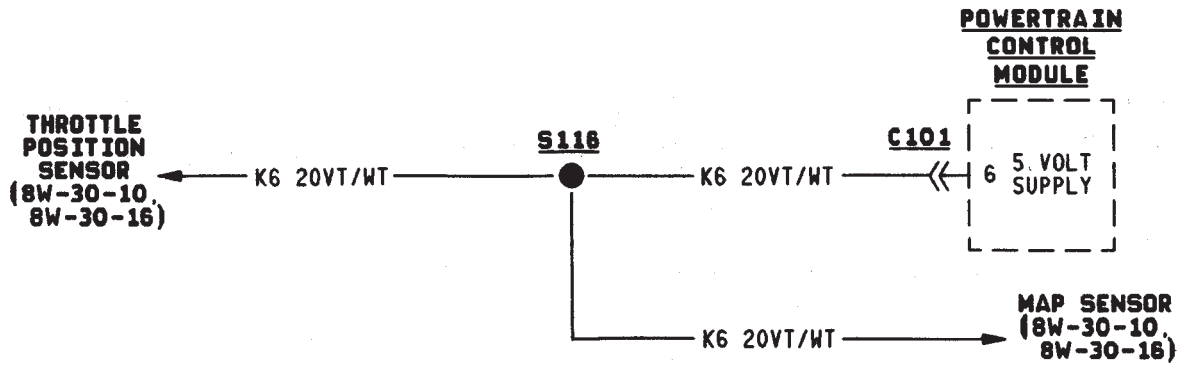
POWERTRAIN CONTROL MODULE
THROTTLE POSITION SENSOR (8W-30-10, 8W-30-16)
K6 20VT/WT
S116
K6 20VT/WT
C101
6 5 VOLT SUPPLY
K6 20VT/WT
MAP SENSOR (8W-30-10, 8W-30-16)

J958W-7

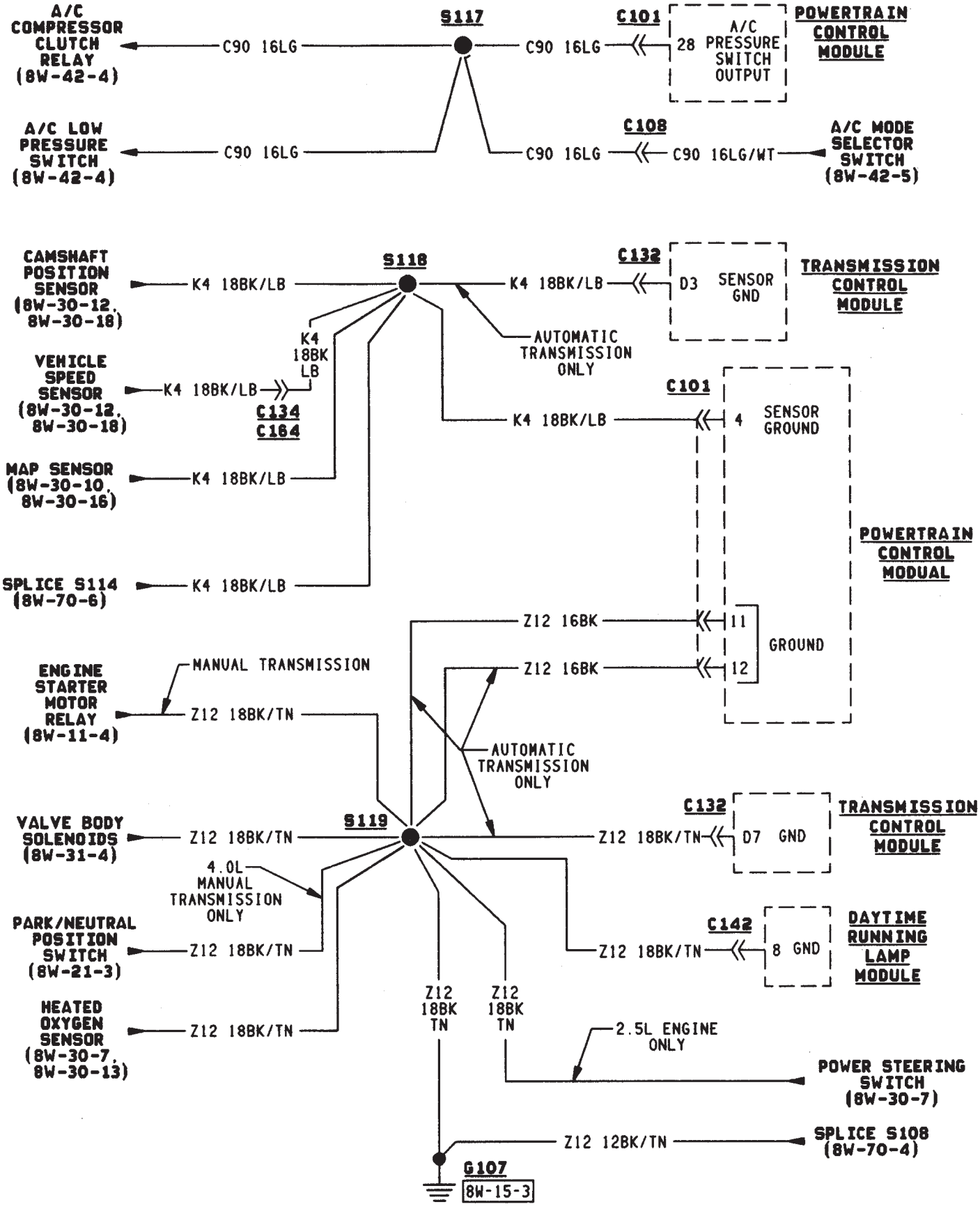
A/C COMPRESSOR CLUTCH RELAY (8W-42-4)
C90 16LG
S117
C90 16LG
C101
28 A/C PRESSURE SWITCH OUTPUT
POWERTRAIN CONTROL MODULE
A/C LOW PRESSURE SWITCH (8W-42-4)
C90 16LG
C90 16LG
C108
C90 16LG/WT
A/C MODE SELECTOR SWITCH (8W-42-5)
CAMSHAFT POSITION SENSOR (8W-30-12, 8W-30-18)
K4 18BK/LB
S118
K4 18BK/LB
C132
D3 SENSOR GND
TRANSMISSION CONTROL MODULE
AUTOMATIC TRANSMISSION ONLY
K4 18BK LB
VEHICLE SPEED SENSOR (8W-30-12, 8W-30-18)
K4 18BK/LB
C134
C164
C101
4 SENSOR GROUND
K4 18BK/LB
MAP SENSOR (8W-30-10, 8W-30-16)
K4 18BK/LB
POWERTRAIN CONTROL MODUAL
SPLICE S114 (8W-70-6)
K4 18BK/LB
Z12 16BK
11
GROUND
Z12 16BK
12
ENGINE STARTER MOTOR RELAY (8W-11-4)
MANUAL TRANSMISSION
Z12 18BK/TN
AUTOMATIC TRANSMISSION ONLY
VALVE BODY SOLENOIDS (8W-31-4)
Z12 18BK/TN
S119
Z12 18BK/TN
C132
D7 GND
TRANSMISSION CONTROL MODULE
4.0L MANUAL TRANSMISSION ONLY
PARK/NEUTRAL POSITION SWITCH (8W-21-3)
Z12 18BK/TN
Z12 18BK/TN
C142
8 GND
DAYTIME RUNNING LAMP MODULE
HEATED OXYGEN SENSOR (8W-30-7, 8W-30-13)
Z12 18BK/TN
Z12 18BK TN
Z12 18BK TN
2.5L ENGINE ONLY
POWER STEERING SWITCH (8W-30-7)
Z12 12BK/TN
SPLICE S108 (8W-70-4)
G107
8W-15-3

J958W-7

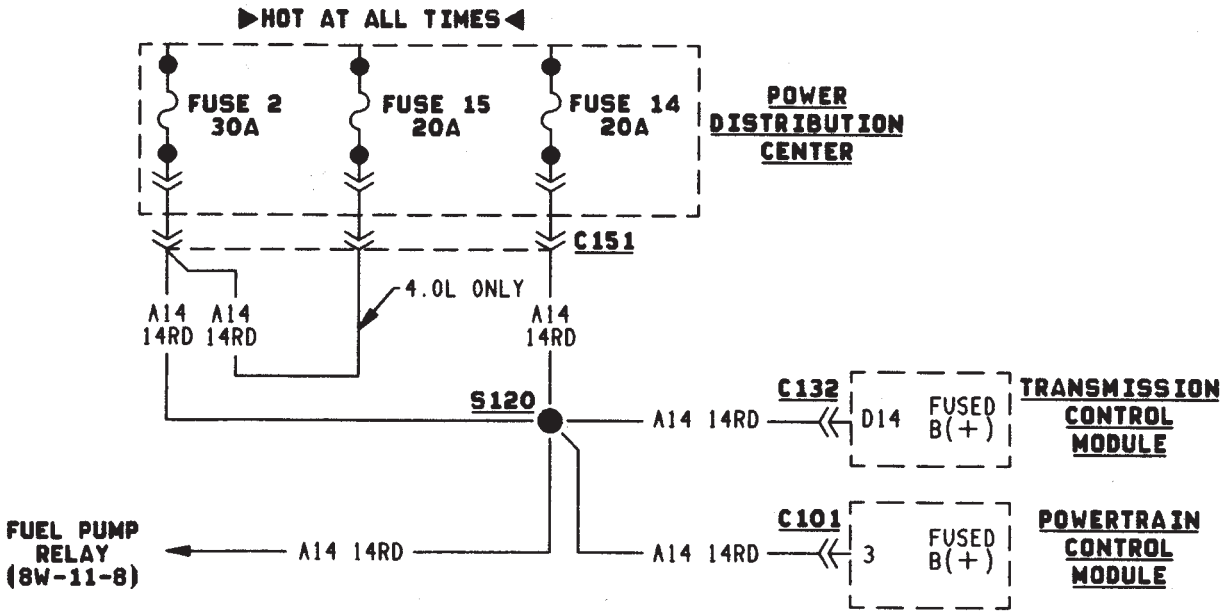
▶HOT AT ALL TIMES◀
FUSE 2 30A
FUSE 15 20A
FUSE 14 20A
POWER DISTRIBUTION CENTER
C151
4.0L ONLY
A14 14RD
A14 14RD
A14 14RD
S120
C132
D14
FUSED B(+)
TRANSMISSION CONTROL MODULE
A14 14RD
FUEL PUMP RELAY (8W-11-8)
A14 14RD
C101
3
FUSED B(+)
POWERTRAIN CONTROL MODULE
A14 14RD

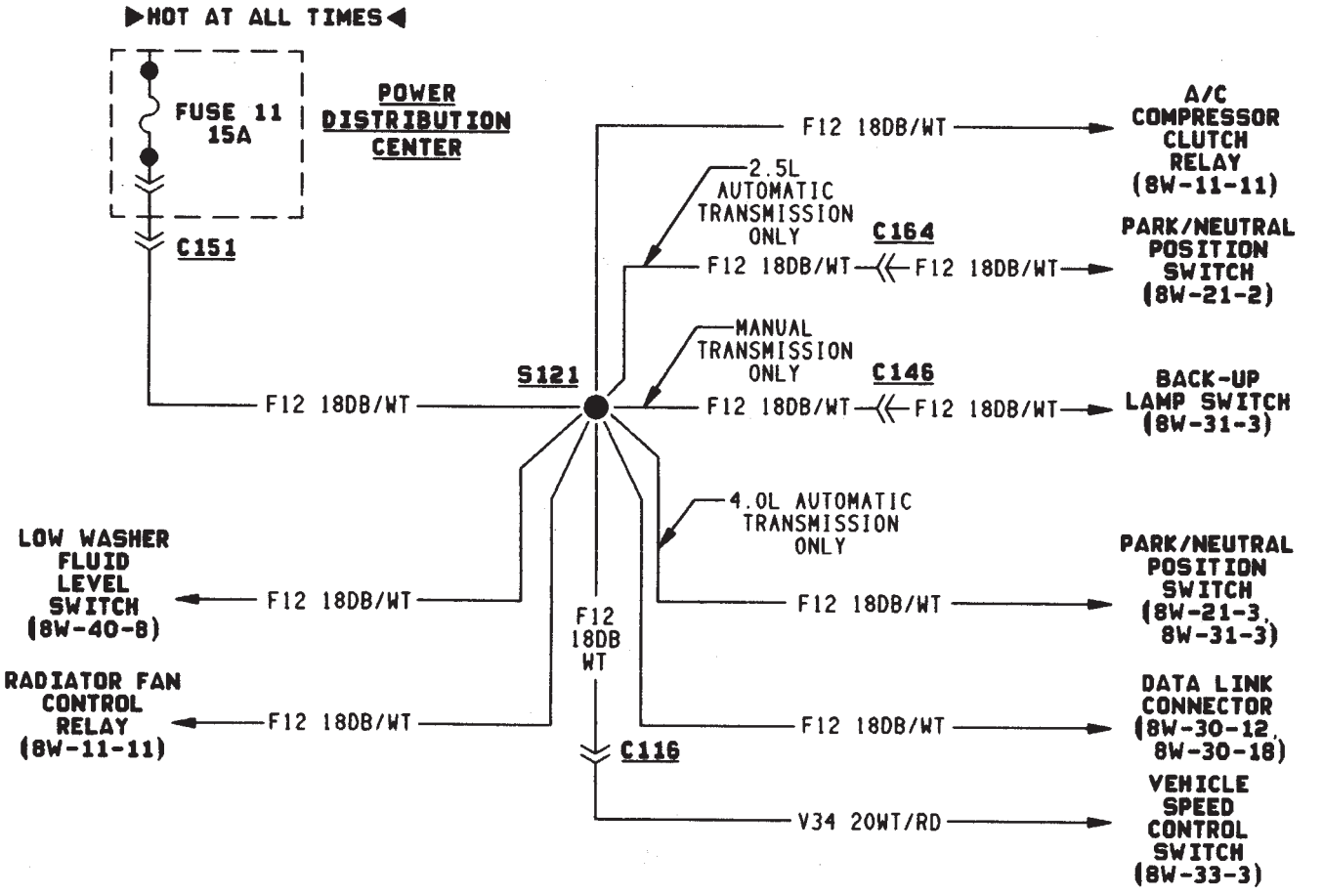
▶HOT AT ALL TIMES◀
FUSE 11 15A
POWER DISTRIBUTION CENTER
C151
F12 18DB/WT
A/C COMPRESSOR CLUTCH RELAY (8W-11-11)
2.5L AUTOMATIC TRANSMISSION ONLY
C164
F12 18DB/WT
F12 18DB/WT
PARK/NEUTRAL POSITION SWITCH (8W-21-2)
MANUAL TRANSMISSION ONLY
S121
C146
F12 18DB/WT
F12 18DB/WT
F12 18DB/WT
BACK-UP LAMP SWITCH (8W-31-3)
4.0L AUTOMATIC TRANSMISSION ONLY
LOW WASHER FLUID LEVEL SWITCH (8W-40-8)
F12 18DB/WT
F12 18DB/WT
PARK/NEUTRAL POSITION SWITCH (8W-21-3, 8W-31-3)
F12 18DB WT
RADIATOR FAN CONTROL RELAY (8W-11-11)
F12 18DB/WT
F12 18DB/WT
DATA LINK CONNECTOR (8W-30-12, 8W-30-18)
C116
V34 20WT/RD
VEHICLE SPEED CONTROL SWITCH (8W-33-3)

J958W-7

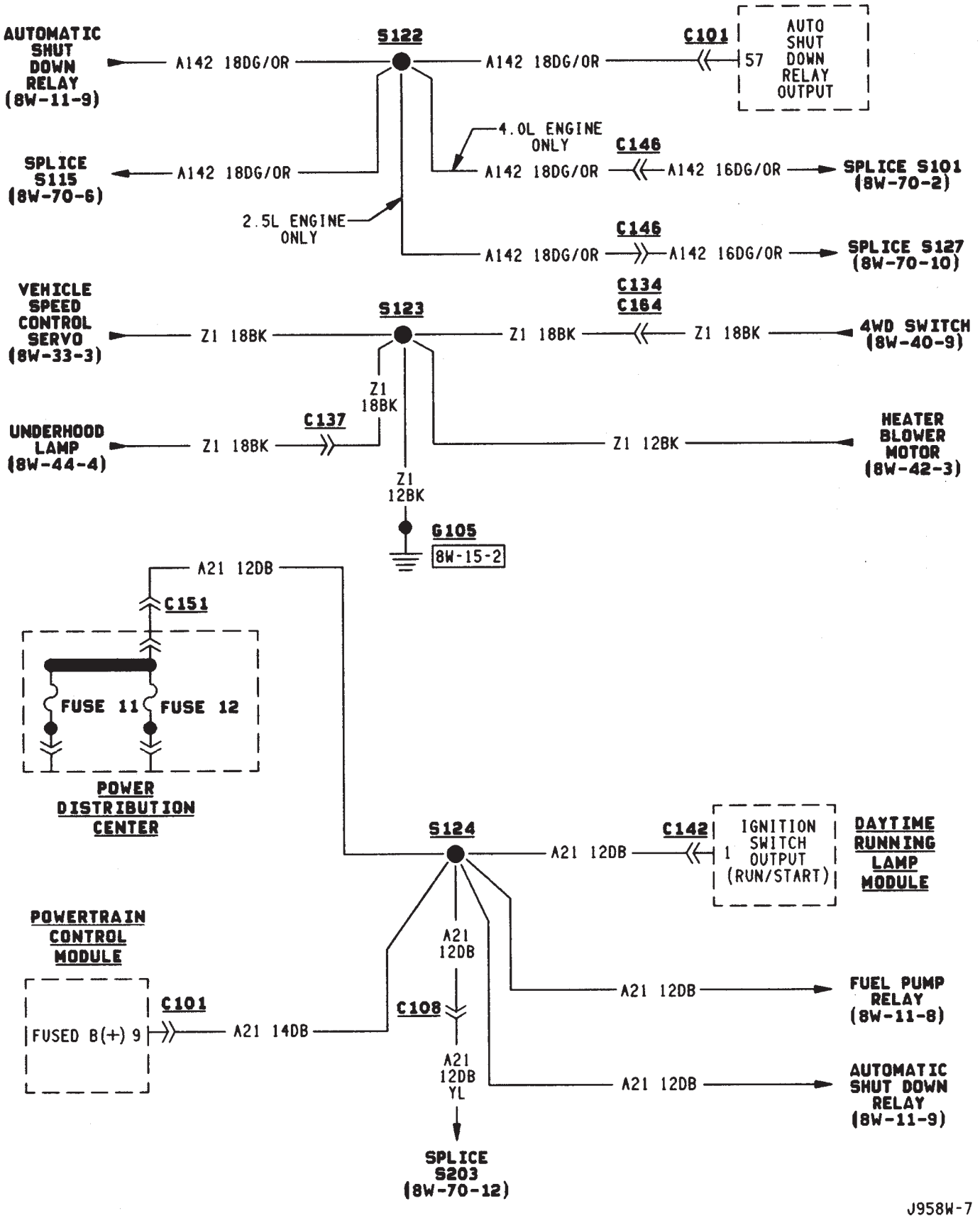
AUTOMATIC SHUT DOWN RELAY (8W-11-9)
A142 18DG/OR
S122
A142 18DG/OR
C101
AUTO SHUT DOWN RELAY OUTPUT
57
4.0L ENGINE ONLY
C146
SPLICE S115 (8W-70-6)
A142 18DG/OR
A142 18DG/OR
A142 16DG/OR
SPLICE S101 (8W-70-2)
2.5L ENGINE ONLY
C146
A142 18DG/OR
A142 16DG/OR
SPLICE S127 (8W-70-10)
VEHICLE SPEED CONTROL SERVO (8W-33-3)
Z1 18BK
S123
C134
C164
Z1 18BK
Z1 18BK
4WD SWITCH (8W-40-9)
Z1 18BK
C137
UNDERHOOD LAMP (8W-44-4)
Z1 18BK
Z1 12BK
HEATER BLOWER MOTOR (8W-42-3)
Z1 12BK
G105
8W-15-2
A21 12DB
C151
FUSE 11
FUSE 12
POWER DISTRIBUTION CENTER
S124
A21 12DB
C142
IGNITION SWITCH OUTPUT (RUN/START)
1
DAYTIME RUNNING LAMP MODULE
POWERTRAIN CONTROL MODULE
A21 12DB
C101
FUSED B(+) 9
A21 14DB
C108
A21 12DB
FUEL PUMP RELAY (8W-11-8)
A21 12DB
A21 12DB YL
A21 12DB
AUTOMATIC SHUT DOWN RELAY (8W-11-9)
SPLICE S203 (8W-70-12)

J958W-7

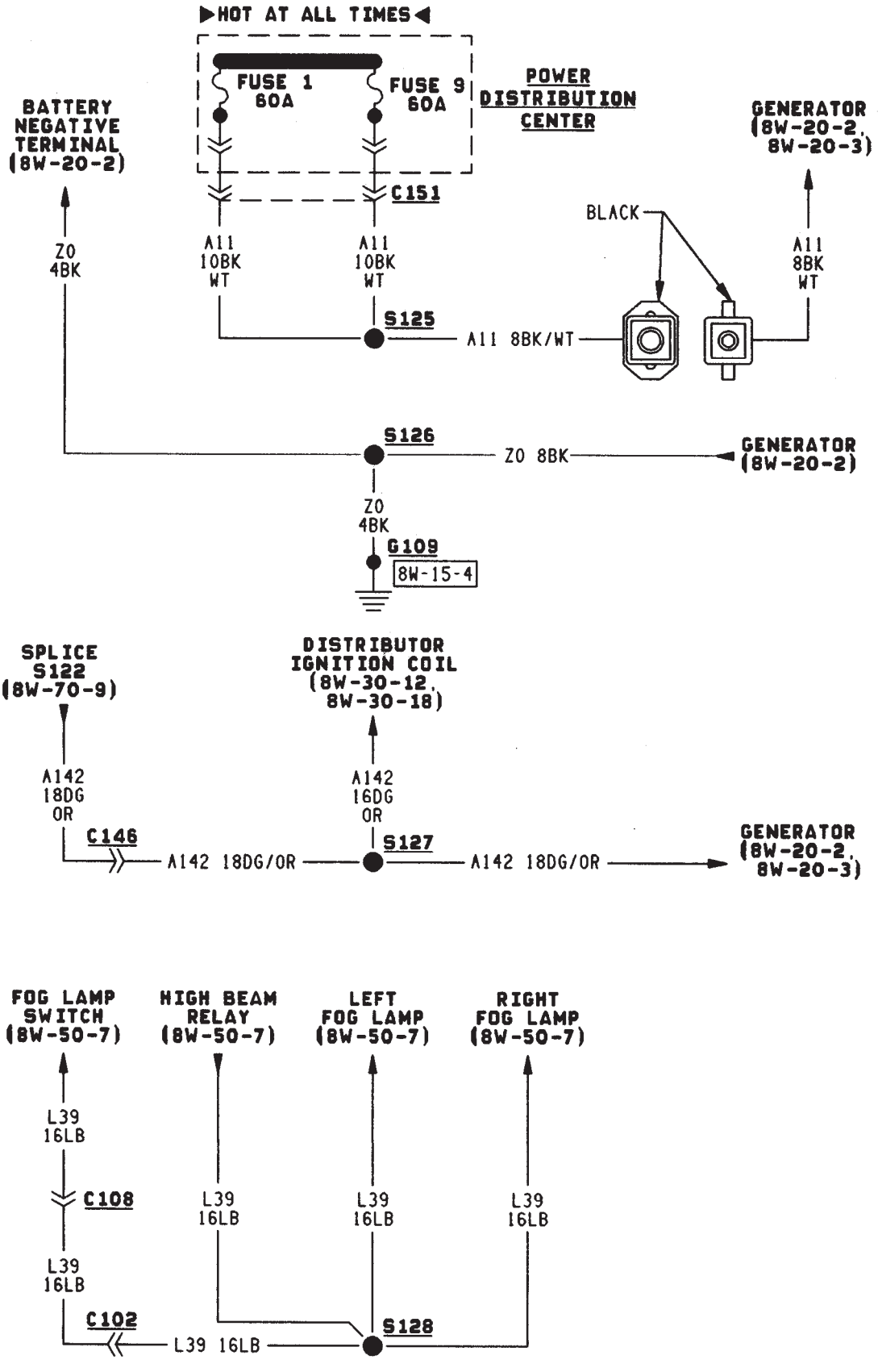
▶HOT AT ALL TIMES◀
FUSE 1
60A
FUSE 9
60A
POWER
DISTRIBUTION
CENTER
BATTERY
NEGATIVE
TERMINAL
(8W-20-2)
GENERATOR
(8W-20-2,
8W-20-3)
C151
BLACK
Z0
4BK
A11
10BK
WT
A11
10BK
WT
A11
8BK
WT
S125
A11 8BK/WT
S126
Z0 8BK
GENERATOR
(8W-20-2)
Z0
4BK
G109
8W-15-4
SPLICE
S122
(8W-70-9)
DISTRIBUTOR
IGNITION COIL
(8W-30-12,
8W-30-18)
A142
18DG
OR
A142
16DG
OR
C146
S127
A142 18DG/OR
A142 18DG/OR
GENERATOR
(8W-20-2,
8W-20-3)
FOG LAMP
SWITCH
(8W-50-7)
HIGH BEAM
RELAY
(8W-50-7)
LEFT
FOG LAMP
(8W-50-7)
RIGHT
FOG LAMP
(8W-50-7)
L39
16LB
C108
L39
16LB
L39
16LB
L39
16LB
L39
16LB
C102
S128
L39 16LB

J958W-7

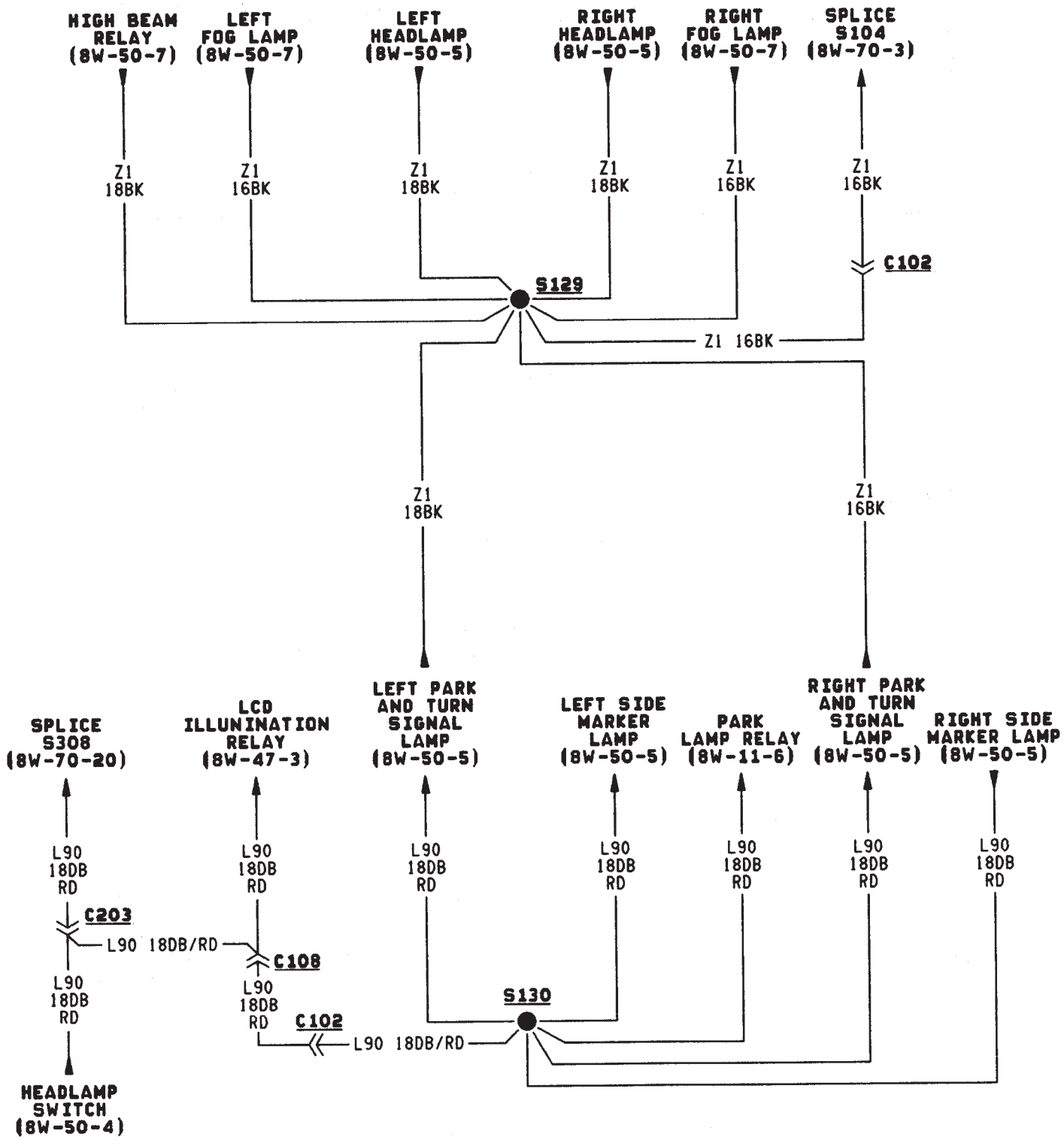
HIGH BEAM RELAY (8W-50-7)
LEFT FOG LAMP (8W-50-7)
LEFT HEADLAMP (8W-50-5)
RIGHT HEADLAMP (8W-50-5)
RIGHT FOG LAMP (8W-50-7)
SPLICE S104 (8W-70-3)
Z1 18BK
Z1 16BK
Z1 18BK
Z1 18BK
Z1 16BK
Z1 16BK
C102
S129
Z1 16BK
Z1 18BK
Z1 16BK
SPLICE S308 (8W-70-20)
LCD ILLUNINATION RELAY (8W-47-3)
LEFT PARK AND TURN SIGNAL LAMP (8W-50-5)
LEFT SIDE MARKER LAMP (8W-50-5)
PARK LAMP RELAY (8W-11-6)
RIGHT PARK AND TURN SIGNAL LAMP (8W-50-5)
RIGHT SIDE MARKER LAMP (8W-50-5)
L90 18DB RD
C203
L90 18DB/RD
C108
C102
L90 18DB/RD
S130
HEADLAMP SWITCH (8W-50-4)

J958W-7

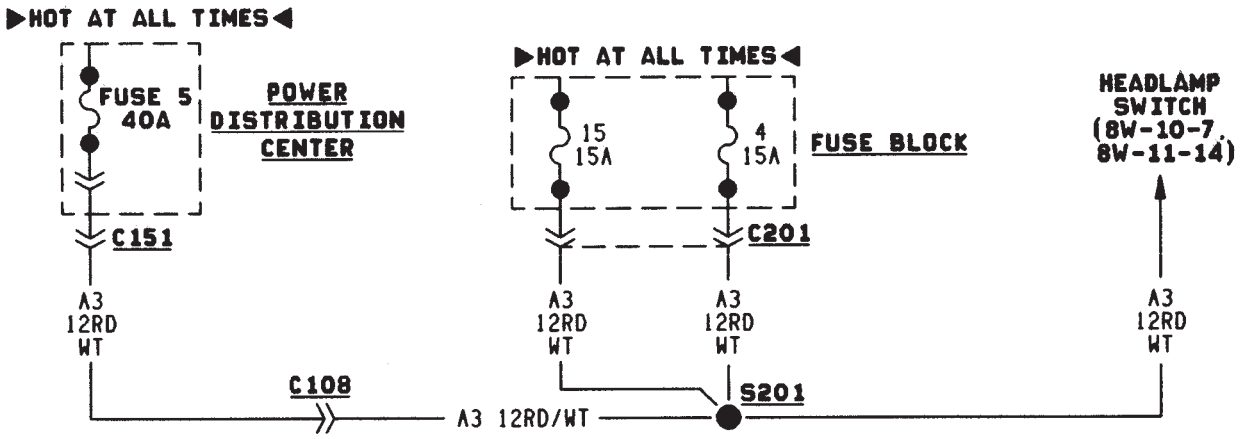
▶HOT AT ALL TIMES◀
FUSE 5
40A
POWER
DISTRIBUTION
CENTER
C151
A3
12RD
WT
C108
▶HOT AT ALL TIMES◀
15
15A
4
15A
FUSE BLOCK
C201
A3
12RD
WT
A3
12RD
WT
S201
A3 12RD/WT
HEADLAMP
SWITCH
(8W-10-7,
8W-11-14)
A3
12RD
WT

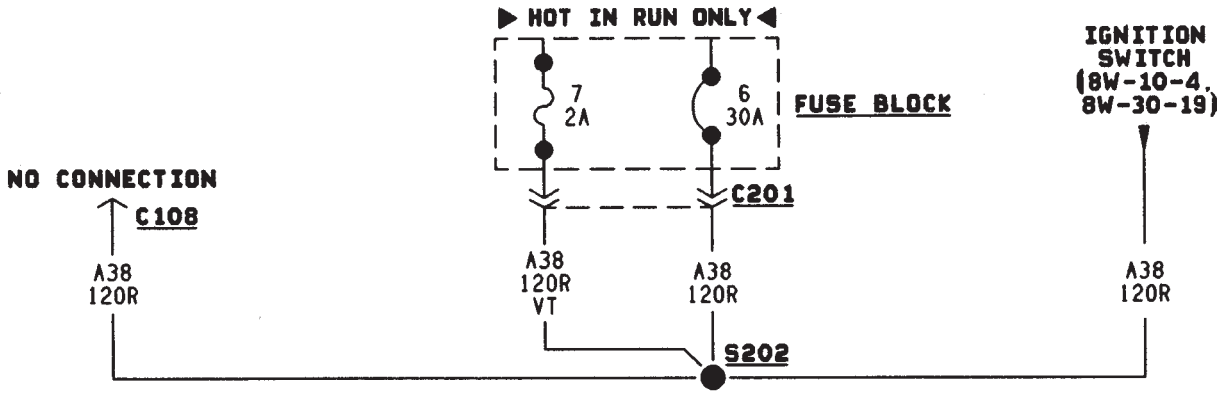
▶ HOT IN RUN ONLY◀
7
2A
6
30A
FUSE BLOCK
C201
NO CONNECTION
C108
A38
120R
A38
120R
VT
A38
120R
S202
A38
120R
IGNITION
SWITCH
(8W-10-4,
8W-30-19)

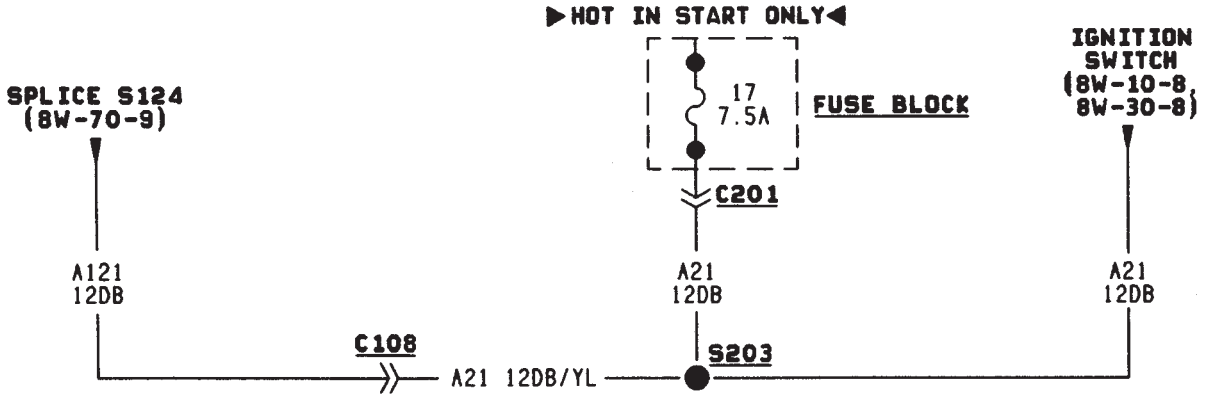
▶HOT IN START ONLY◀
17
7.5A
FUSE BLOCK
C201
SPLICE S124
(8W-70-9)
A121
12DB
A21
12DB
C108
A21 12DB/YL
S203
A21
12DB
IGNITION
SWITCH
(8W-10-8,
8W-30-8)

J958W-7

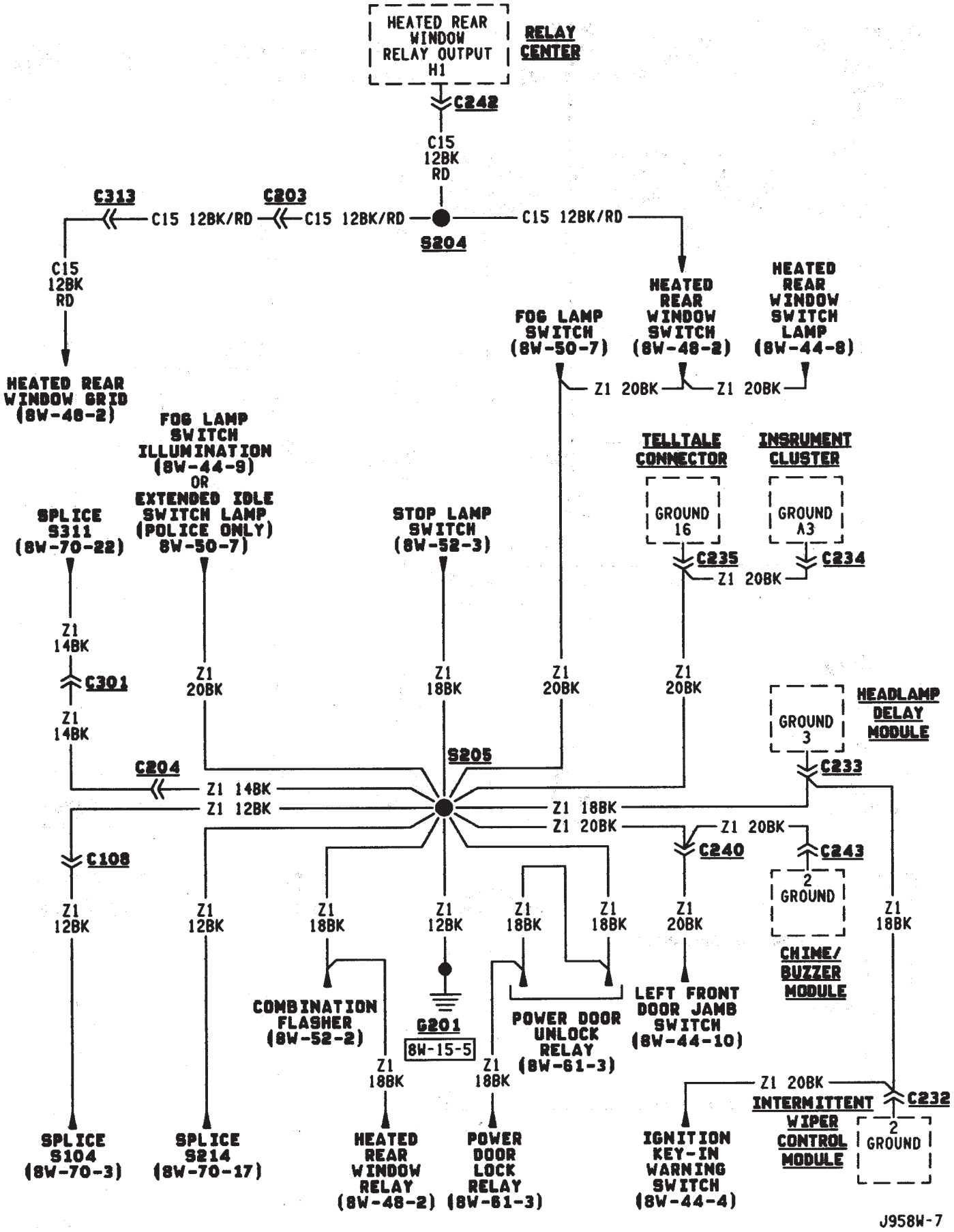
HEATED REAR WINDOW RELAY OUTPUT H1
RELAY CENTER
C242
C15 12BK RD
C313
C203
C15 12BK/RD
C15 12BK/RD
C15 12BK/RD
S204
C15 12BK RD
HEATED REAR WINDOW GRID (8W-48-2)
FOG LAMP SWITCH (8W-50-7)
HEATED REAR WINDOW SWITCH (8W-48-2)
HEATED REAR WINDOW SWITCH LAMP (8W-44-8)
Z1 20BK
Z1 20BK
FOG LAMP SWITCH ILLUMINATION (8W-44-9) OR EXTENDED IDLE SWITCH LAMP (POLICE ONLY) 8W-50-7)
TELLTALE CONNECTOR
INSRUMENT CLUSTER
GROUND 16
GROUND A3
C235
C234
Z1 20BK
SPLICE S311 (8W-70-22)
STOP LAMP SWITCH (8W-52-3)
Z1 14BK
C301
Z1 14BK
Z1 20BK
Z1 18BK
Z1 20BK
Z1 20BK
GROUND 3
HEADLAMP DELAY MODULE
C204
S205
C233
Z1 14BK
Z1 12BK
Z1 18BK
Z1 20BK
Z1 20BK
C108
C240
C243
2 GROUND
CHIME/ BUZZER MODULE
Z1 12BK
Z1 12BK
Z1 18BK
Z1 12BK
Z1 18BK
Z1 18BK
Z1 20BK
Z1 18BK
COMBINATION FLASHER (8W-52-2)
G201
8W-15-5
POWER DOOR UNLOCK RELAY (8W-61-3)
LEFT FRONT DOOR JAMB SWITCH (8W-44-10)
Z1 18BK
Z1 18BK
Z1 20BK
C232
INTERMITTENT WIPER CONTROL MODULE
2 GROUND
SPLICE S104 (8W-70-3)
SPLICE S214 (8W-70-17)
HEATED REAR WINDOW RELAY (8W-48-2)
POWER DOOR LOCK RELAY (8W-61-3)
IGNITION KEY-IN WARNING SWITCH (8W-44-4)
J958W-7

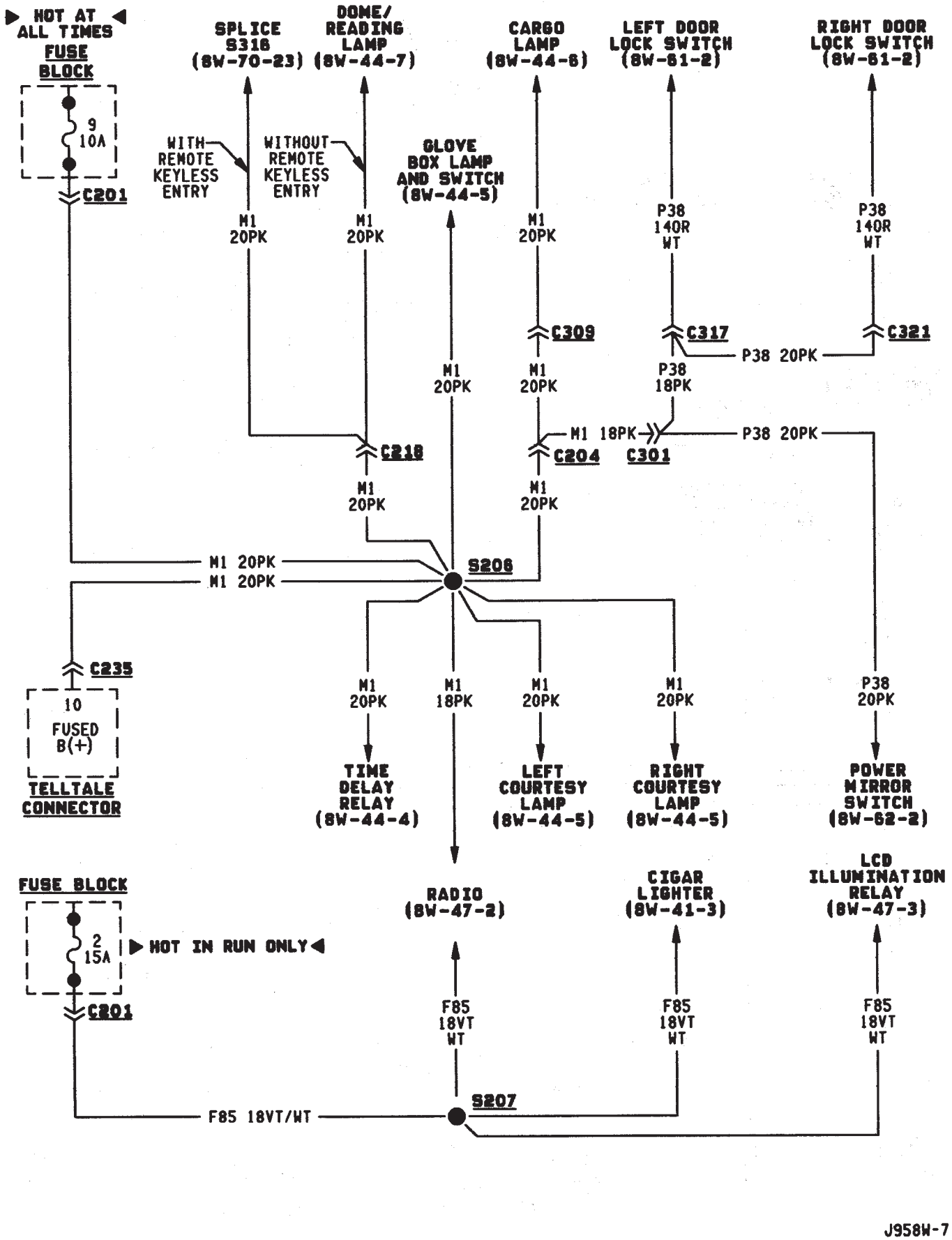
▶ HOT AT ALL TIMES ◀
FUSE BLOCK
9
10A
C201
SPLICE S316 (8W-70-23)
DOME/ READING LAMP (8W-44-7)
CARGO LAMP (8W-44-6)
LEFT DOOR LOCK SWITCH (8W-61-2)
RIGHT DOOR LOCK SWITCH (8W-61-2)
WITH REMOTE KEYLESS ENTRY
WITHOUT REMOTE KEYLESS ENTRY
GLOVE BOX LAMP AND SWITCH (8W-44-5)
M1 20PK
P38 140R WT
C309
C317
C321
P38 20PK
P38 18PK
M1 18PK
C218
C204
C301
S206
M1 20PK
C235
10
FUSED B(+)
TELLTALE CONNECTOR
M1 18PK
P38 20PK
TIME DELAY RELAY (8W-44-4)
LEFT COURTESY LAMP (8W-44-5)
RIGHT COURTESY LAMP (8W-44-5)
POWER MIRROR SWITCH (8W-62-2)
FUSE BLOCK
2
15A
▶ HOT IN RUN ONLY ◀
C201
RADIO (8W-47-2)
CIGAR LIGHTER (8W-41-3)
LCD ILLUMINATION RELAY (8W-47-3)
F85 18VT WT
F85 18VT/WT
S207

J958W-7

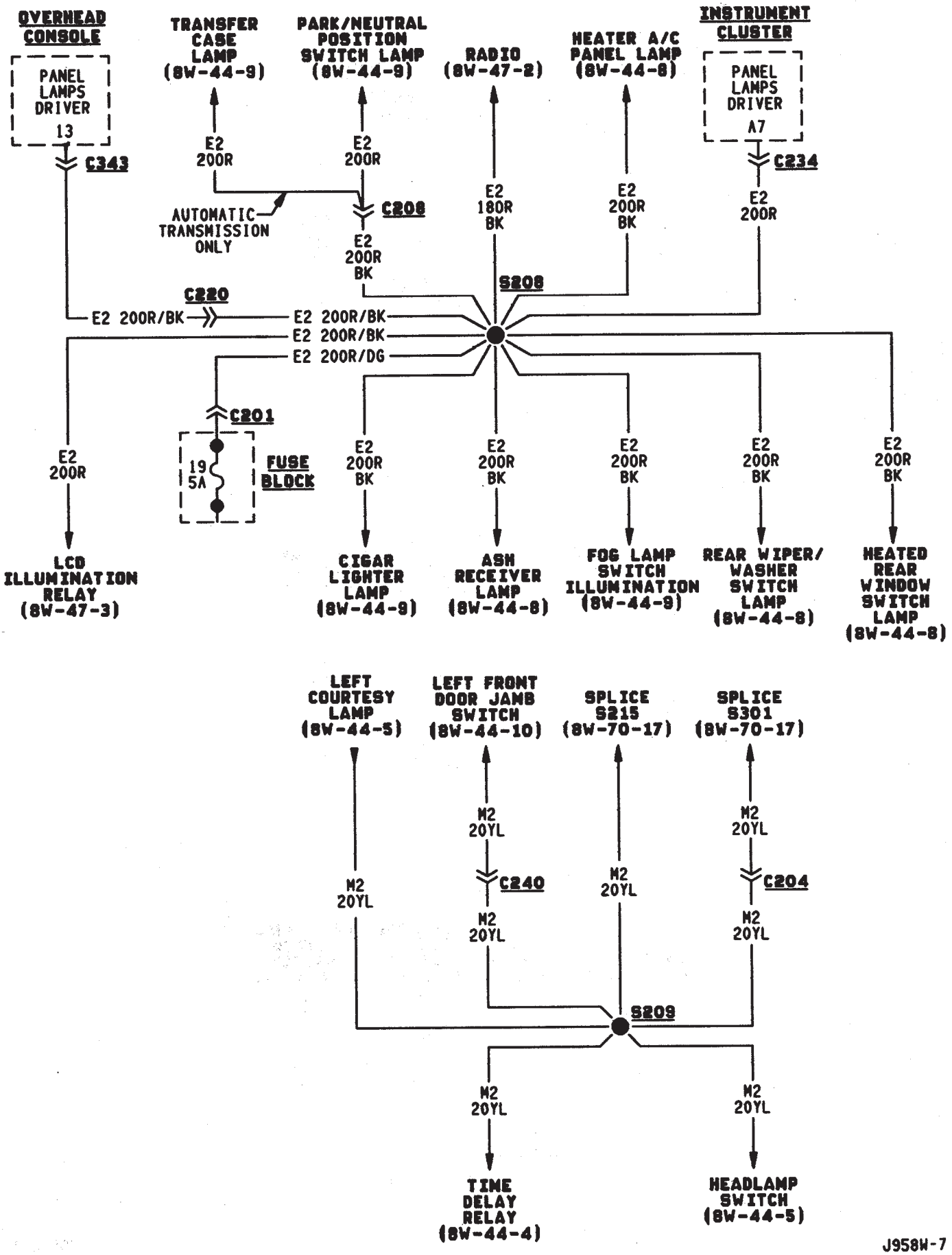
OVERHEAD CONSOLE
PANEL LAMPS DRIVER 13
C343
TRANSFER CASE LAMP (8W-44-9)
E2 200R
PARK/NEUTRAL POSITION SWITCH LAMP (8W-44-9)
E2 200R
AUTOMATIC TRANSMISSION ONLY
C208
E2 200R BK
RADIO (8W-47-2)
E2 180R BK
HEATER A/C PANEL LAMP (8W-44-8)
E2 200R BK
INSTRUMENT CLUSTER
PANEL LAMPS DRIVER A7
C234
E2 200R
C220
E2 200R/BK
E2 200R/BK
E2 200R/DG
S208
C201
19 5A
FUSE BLOCK
E2 200R
LCD ILLUMINATION RELAY (8W-47-3)
E2 200R BK
CIGAR LIGHTER LAMP (8W-44-9)
E2 200R BK
ASH RECEIVER LAMP (8W-44-8)
E2 200R BK
FOG LAMP SWITCH ILLUMINATION (8W-44-9)
E2 200R BK
REAR WIPER/ WASHER SWITCH LAMP (8W-44-8)
E2 200R BK
HEATED REAR WINDOW SWITCH LAMP (8W-44-8)
LEFT COURTESY LAMP (8W-44-5)
M2 20YL
LEFT FRONT DOOR JAMB SWITCH (8W-44-10)
M2 20YL
C240
M2 20YL
SPLICE S215 (8W-70-17)
M2 20YL
SPLICE S301 (8W-70-17)
M2 20YL
C204
M2 20YL
S209
M2 20YL
TIME DELAY RELAY (8W-44-4)
M2 20YL
HEADLAMP SWITCH (8W-44-5)

J958W-7

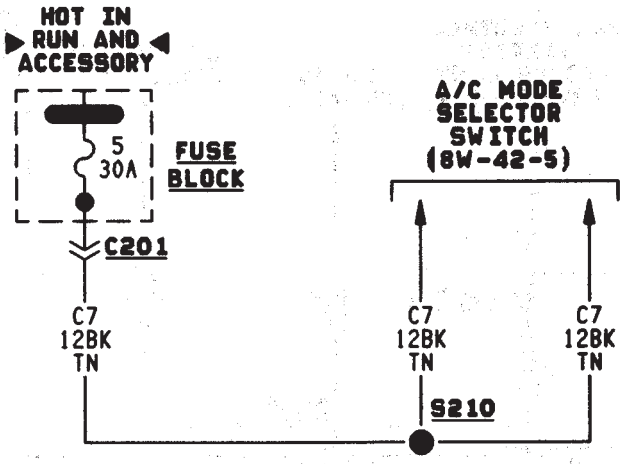
HOT IN RUN AND ACCESSORY
5
30A
FUSE BLOCK
C201
C7
12BK
TN
A/C MODE SELECTOR SWITCH (8W-42-5)
C7
12BK
TN
C7
12BK
TN
S210

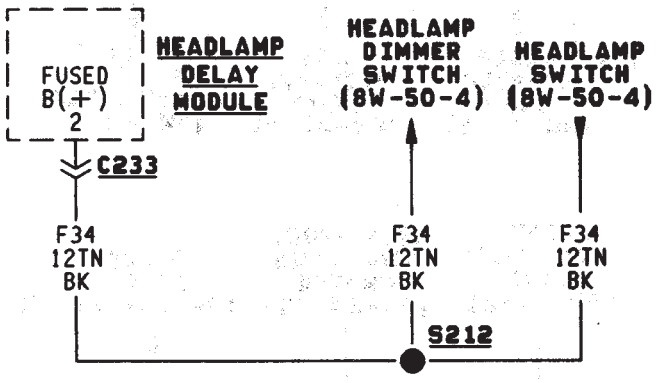
FUSED
B(+)
2
HEADLAMP DELAY MODULE
C233
F34
12TN
BK
HEADLAMP DIMMER SWITCH (8W-50-4)
F34
12TN
BK
HEADLAMP SWITCH (8W-50-4)
F34
12TN
BK
S212

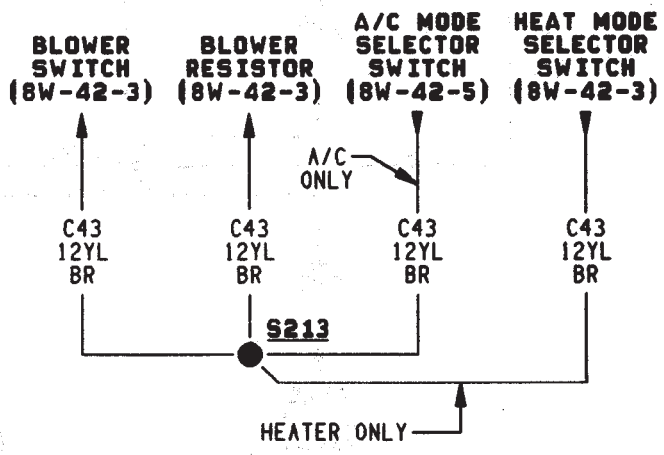
BLOWER SWITCH (8W-42-3)
BLOWER RESISTOR (8W-42-3)
A/C MODE SELECTOR SWITCH (8W-42-5)
HEAT MODE SELECTOR SWITCH (8W-42-3)
A/C ONLY
C43
12YL
BR
C43
12YL
BR
C43
12YL
BR
C43
12YL
BR
S213
HEATER ONLY

J958W-7

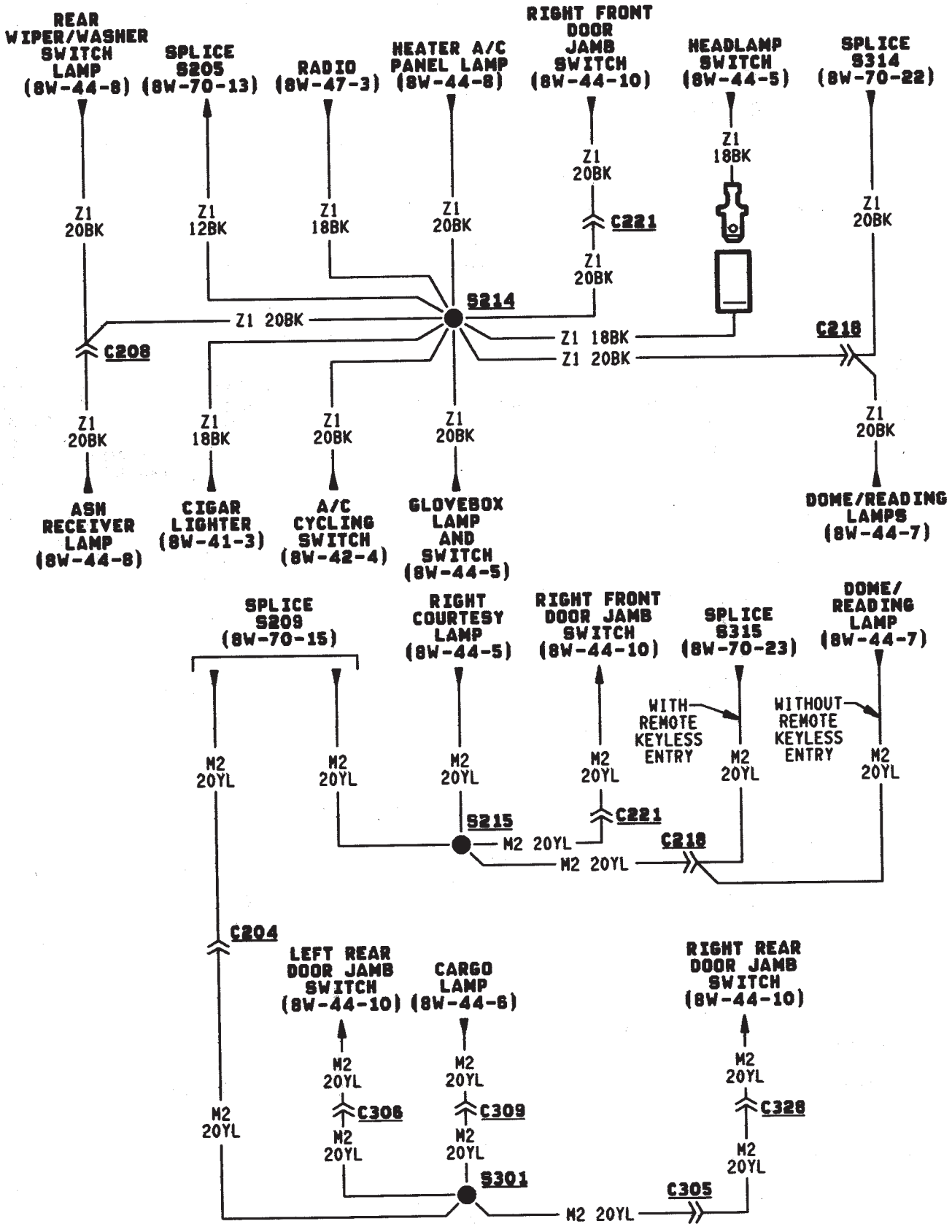
REAR WIPER/WASHER SWITCH LAMP (8W-44-8)
SPLICE S205 (8W-70-13)
RADIO (8W-47-3)
HEATER A/C PANEL LAMP (8W-44-8)
RIGHT FRONT DOOR JAMB SWITCH (8W-44-10)
HEADLAMP SWITCH (8W-44-5)
SPLICE S314 (8W-70-22)
Z1 20BK
Z1 12BK
Z1 18BK
Z1 20BK
Z1 20BK
Z1 18BK
Z1 20BK
C221
S214
Z1 20BK
Z1 18BK
Z1 20BK
C208
C218
ASH RECEIVER LAMP (8W-44-8)
CIGAR LIGHTER (8W-41-3)
A/C CYCLING SWITCH (8W-42-4)
GLOVEBOX LAMP AND SWITCH (8W-44-5)
DOME/READING LAMPS (8W-44-7)
SPLICE S209 (8W-70-15)
RIGHT COURTESY LAMP (8W-44-5)
RIGHT FRONT DOOR JAMB SWITCH (8W-44-10)
SPLICE S315 (8W-70-23)
DOME/ READING LAMP (8W-44-7)
WITH REMOTE KEYLESS ENTRY
WITHOUT REMOTE KEYLESS ENTRY
M2 20YL
S215
C221
C218
C204
LEFT REAR DOOR JAMB SWITCH (8W-44-10)
CARGO LAMP (8W-44-6)
RIGHT REAR DOOR JAMB SWITCH (8W-44-10)
C308
C309
C328
S301
C305

J958W-7

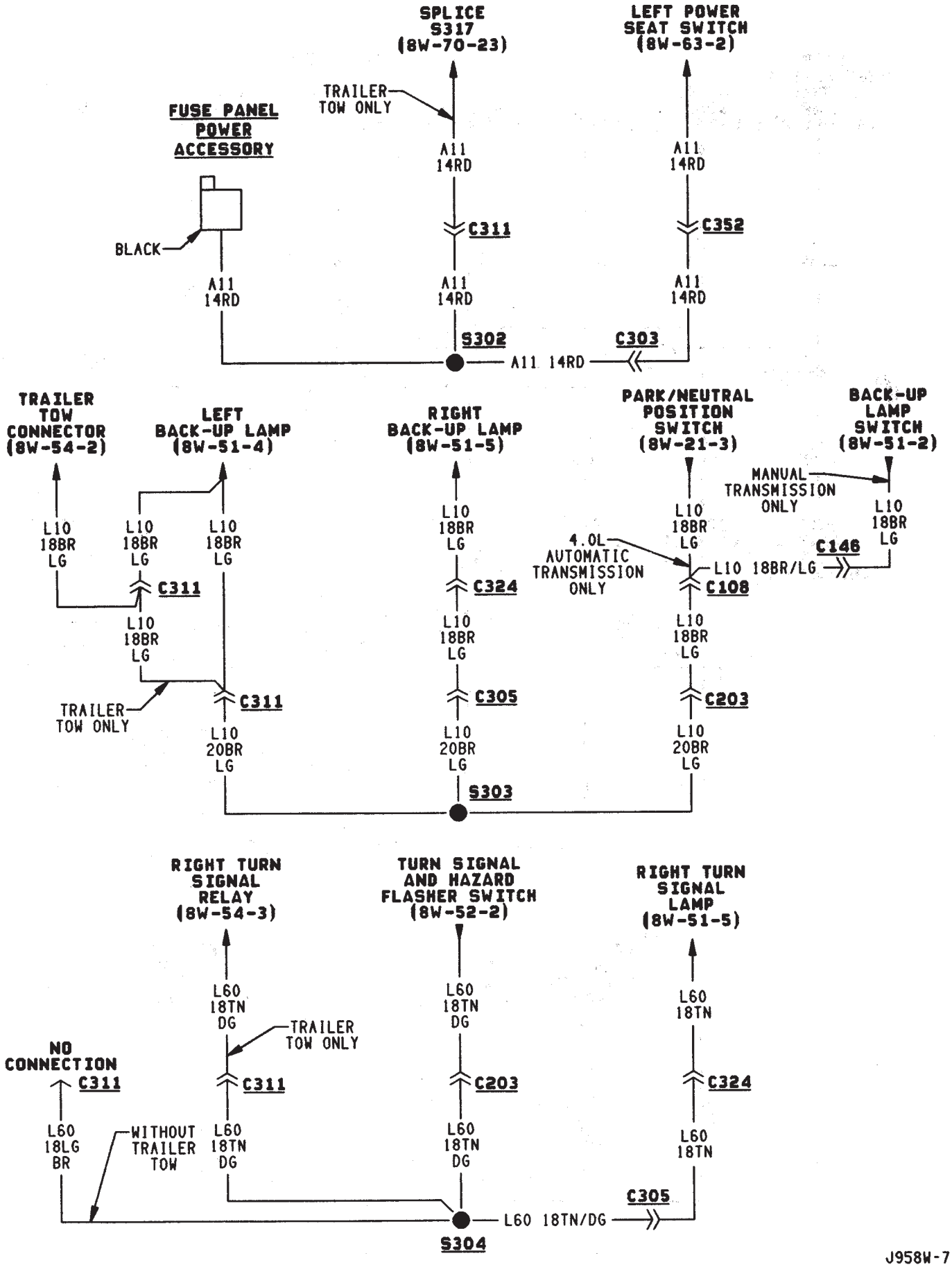
SPLICE S317 (8W-70-23)
LEFT POWER SEAT SWITCH (8W-63-2)
FUSE PANEL POWER ACCESSORY
TRAILER TOW ONLY
BLACK
A11 14RD
C311
C352
S302
C303
A11 14RD
TRAILER TOW CONNECTOR (8W-54-2)
LEFT BACK-UP LAMP (8W-51-4)
RIGHT BACK-UP LAMP (8W-51-5)
PARK/NEUTRAL POSITION SWITCH (8W-21-3)
BACK-UP LAMP SWITCH (8W-51-2)
MANUAL TRANSMISSION ONLY
4.0L AUTOMATIC TRANSMISSION ONLY
L10 18BR LG
L10 18BR/LG
C146
C108
C324
C305
C203
L10 20BR LG
S303
RIGHT TURN SIGNAL RELAY (8W-54-3)
TURN SIGNAL AND HAZARD FLASHER SWITCH (8W-52-2)
RIGHT TURN SIGNAL LAMP (8W-51-5)
L60 18TN DG
L60 18TN
NO CONNECTION
L60 18LG BR
WITHOUT TRAILER TOW
L60 18TN/DG
S304
J958W-7

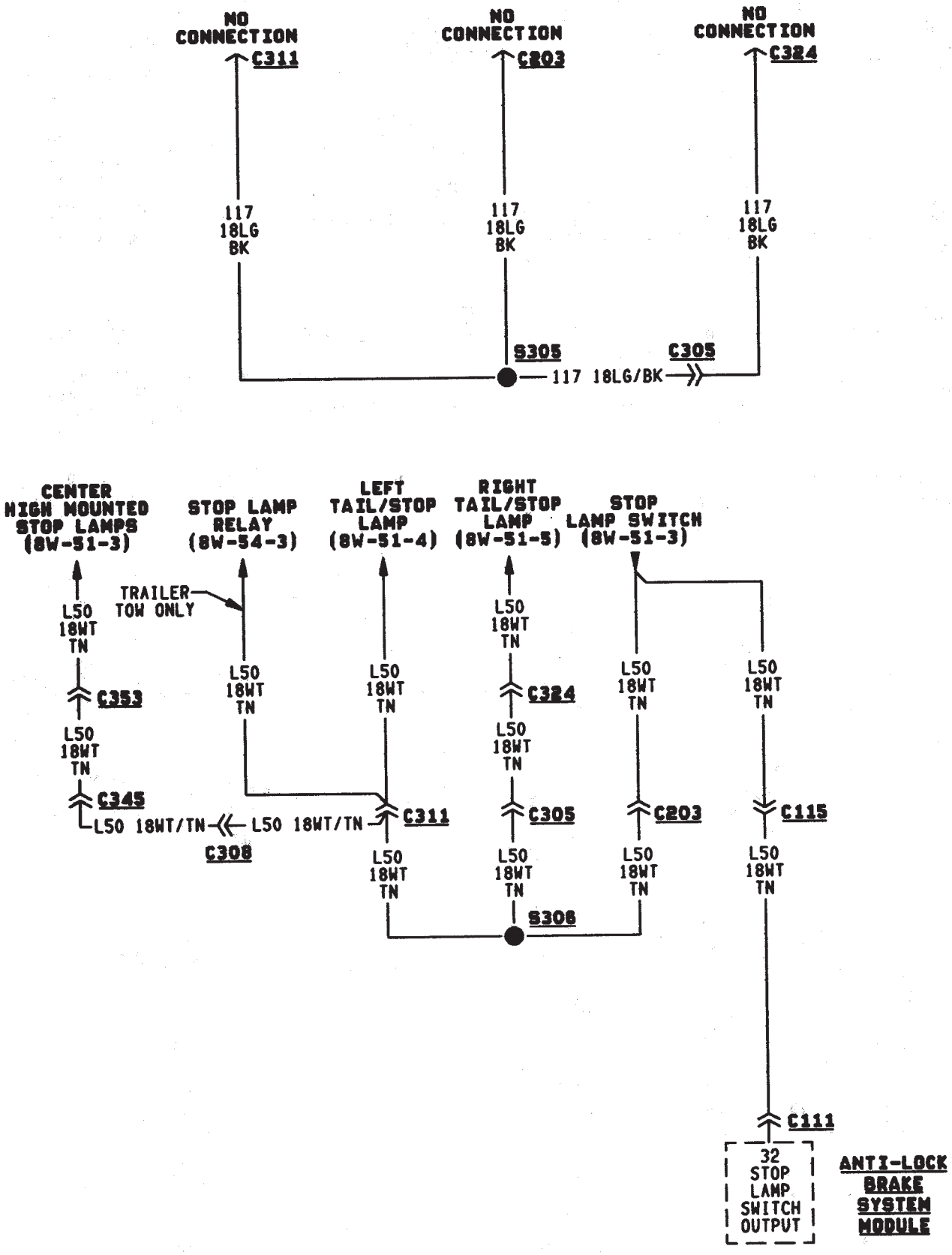
NO CONNECTION
C311
NO CONNECTION
C203
NO CONNECTION
C324
117 18LG BK
117 18LG BK
117 18LG BK
S305
C305
117 18LG/BK
CENTER HIGH MOUNTED STOP LAMPS (8W-51-3)
STOP LAMP RELAY (8W-54-3)
LEFT TAIL/STOP LAMP (8W-51-4)
RIGHT TAIL/STOP LAMP (8W-51-5)
STOP LAMP SWITCH (8W-51-3)
TRAILER TOW ONLY
L50 18WT TN
C353
C345
L50 18WT/TN
C308
C311
C324
C305
C203
C115
S306
C111
32 STOP LAMP SWITCH OUTPUT
ANTI-LOCK BRAKE SYSTEM MODULE

J958W-7

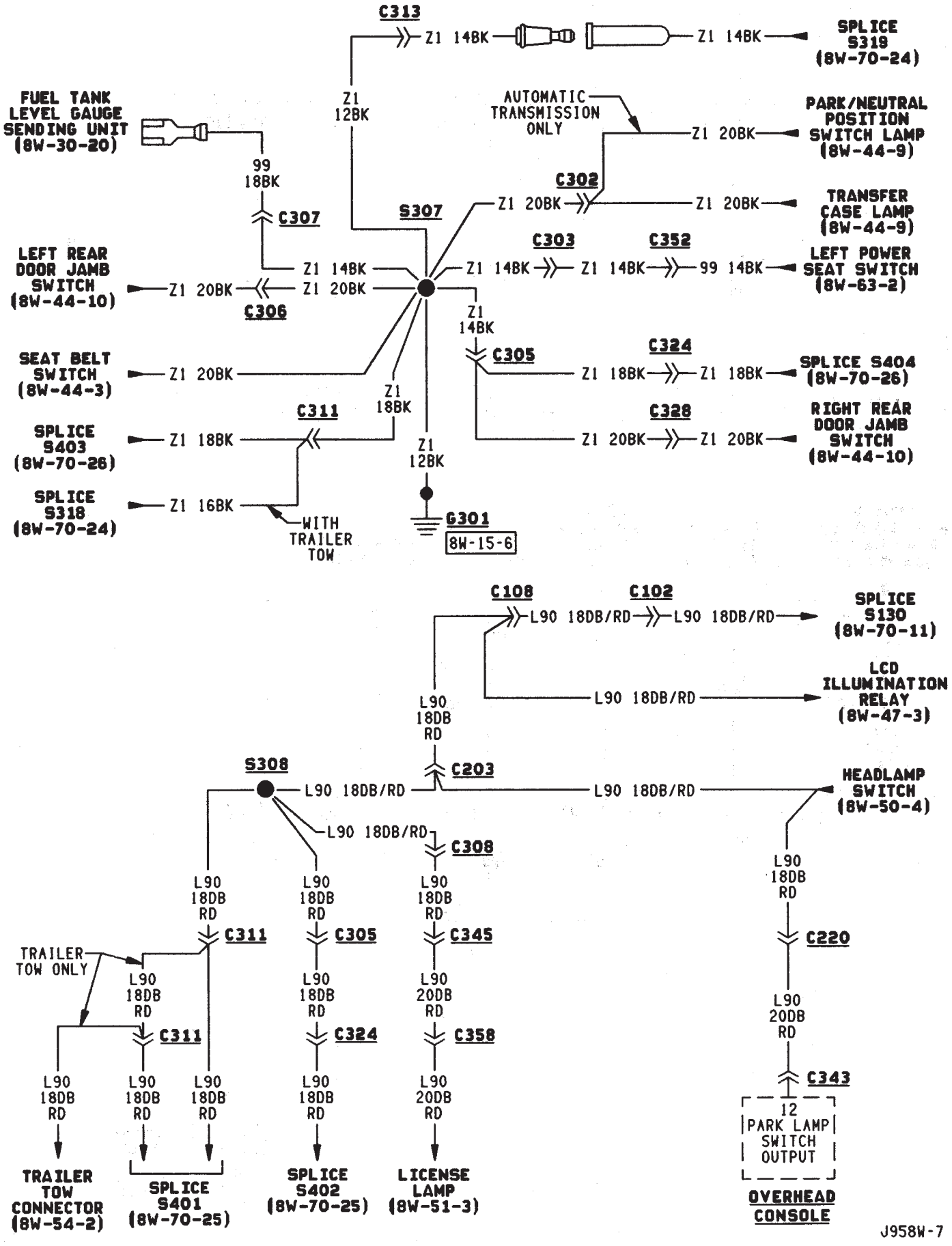
C313
Z1 14BK
Z1 14BK
SPLICE S319 (8W-70-24)
FUEL TANK LEVEL GAUGE SENDING UNIT (8W-30-20)
Z1 12BK
AUTOMATIC TRANSMISSION ONLY
Z1 20BK
PARK/NEUTRAL POSITION SWITCH LAMP (8W-44-9)
99 18BK
C307
C302
Z1 20BK
Z1 20BK
TRANSFER CASE LAMP (8W-44-9)
S307
C303
C352
LEFT REAR DOOR JAMB SWITCH (8W-44-10)
Z1 20BK
Z1 14BK
Z1 20BK
C306
Z1 14BK
Z1 14BK
Z1 14BK
99 14BK
LEFT POWER SEAT SWITCH (8W-63-2)
Z1 14BK
C305
C324
SEAT BELT SWITCH (8W-44-3)
Z1 20BK
Z1 18BK
Z1 18BK
SPLICE S404 (8W-70-26)
C311
Z1 18BK
C328
SPLICE S403 (8W-70-26)
Z1 18BK
Z1 20BK
Z1 20BK
RIGHT REAR DOOR JAMB SWITCH (8W-44-10)
Z1 12BK
SPLICE S318 (8W-70-24)
Z1 16BK
WITH TRAILER TOW
G301
8W-15-6
C108
C102
L90 18DB/RD
L90 18DB/RD
SPLICE S130 (8W-70-11)
LCD ILLUMINATION RELAY (8W-47-3)
L90 18DB/RD
L90 18DB/RD
S308
C203
L90 18DB/RD
L90 18DB/RD
HEADLAMP SWITCH (8W-50-4)
L90 18DB/RD
C308
L90 18DB RD
L90 18DB RD
L90 18DB RD
L90 18DB RD
C311
C305
C345
C220
TRAILER TOW ONLY
L90 18DB RD
L90 18DB RD
L90 20DB RD
L90 20DB RD
C311
C324
C358
C343
L90 18DB RD
L90 18DB RD
L90 18DB RD
L90 18DB RD
L90 20DB RD
12 PARK LAMP SWITCH OUTPUT
TRAILER TOW CONNECTOR (8W-54-2)
SPLICE S401 (8W-70-25)
SPLICE S402 (8W-70-25)
LICENSE LAMP (8W-51-3)
OVERHEAD CONSOLE
J958W-7

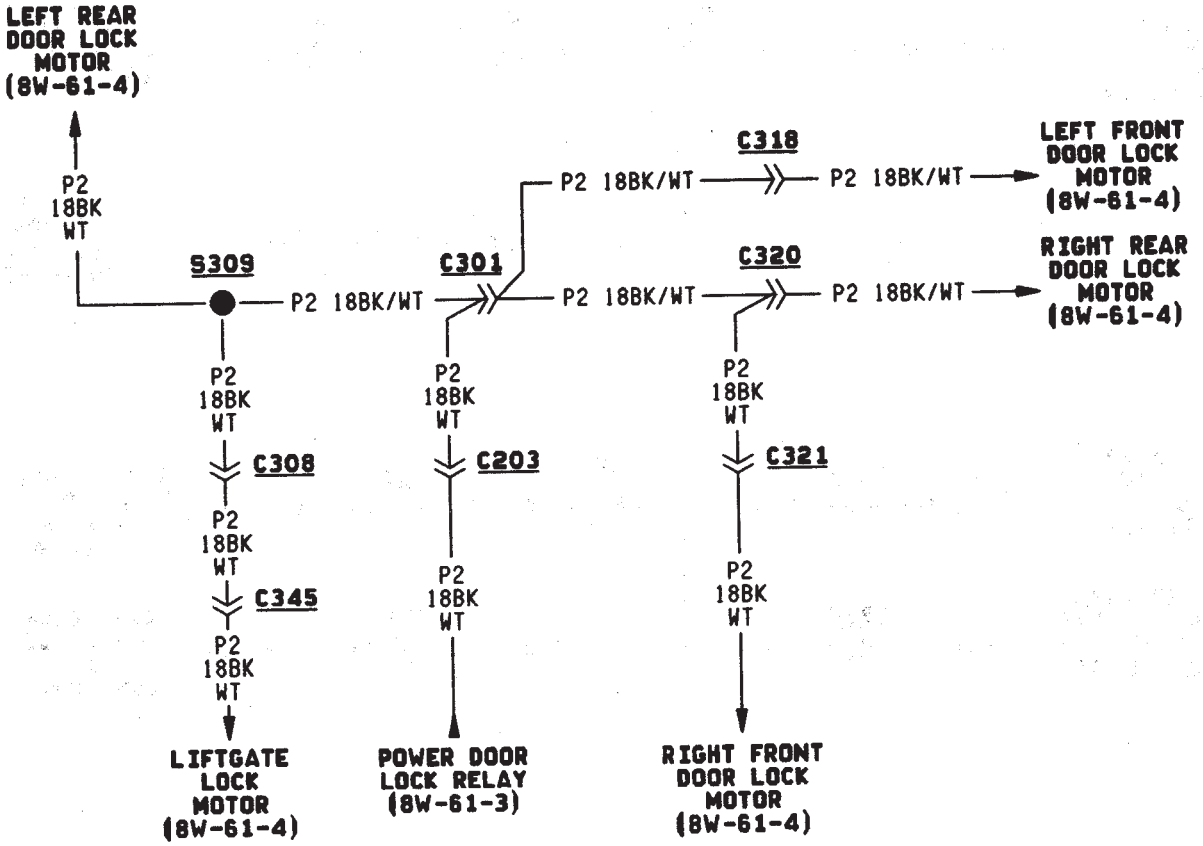
LEFT REAR DOOR LOCK MOTOR (8W-61-4)
P2 18BK WT
S309
P2 18BK/WT
C301
P2 18BK/WT
C318
P2 18BK/WT
P2 18BK/WT
LEFT FRONT DOOR LOCK MOTOR (8W-61-4)
C320
P2 18BK/WT
P2 18BK/WT
RIGHT REAR DOOR LOCK MOTOR (8W-61-4)
P2 18BK WT
C308
P2 18BK WT
C345
P2 18BK WT
LIFTGATE LOCK MOTOR (8W-61-4)
P2 18BK WT
C203
P2 18BK WT
POWER DOOR LOCK RELAY (8W-61-3)
P2 18BK WT
C321
P2 18BK WT
RIGHT FRONT DOOR LOCK MOTOR (8W-61-4)

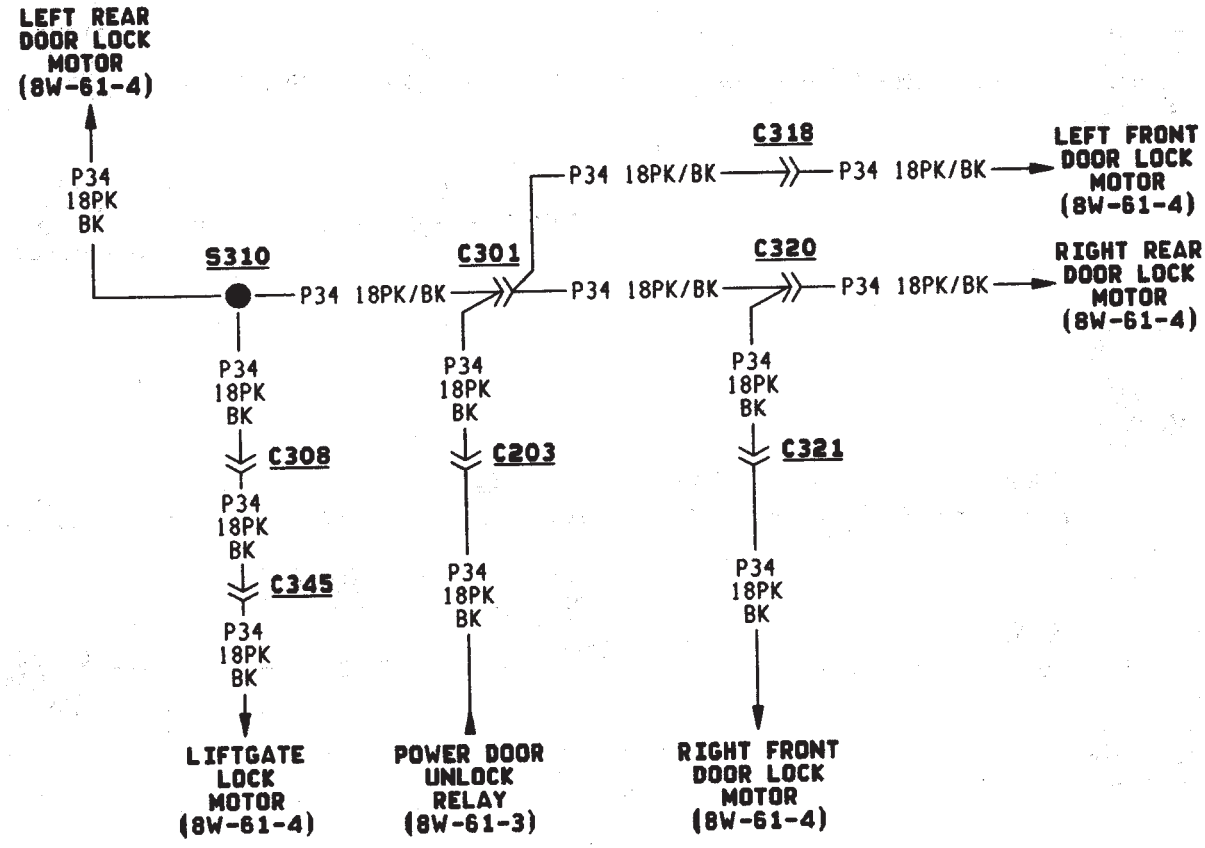
LEFT REAR DOOR LOCK MOTOR (8W-61-4)
P34 18PK BK
S310
P34 18PK/BK
C301
P34 18PK/BK
C318
P34 18PK/BK
P34 18PK/BK
LEFT FRONT DOOR LOCK MOTOR (8W-61-4)
C320
P34 18PK/BK
P34 18PK/BK
RIGHT REAR DOOR LOCK MOTOR (8W-61-4)
P34 18PK BK
C308
P34 18PK BK
C345
P34 18PK BK
LIFTGATE LOCK MOTOR (8W-61-4)
P34 18PK BK
C203
P34 18PK BK
POWER DOOR UNLOCK RELAY (8W-61-3)
P34 18PK BK
C321
P34 18PK BK
RIGHT FRONT DOOR LOCK MOTOR (8W-61-4)

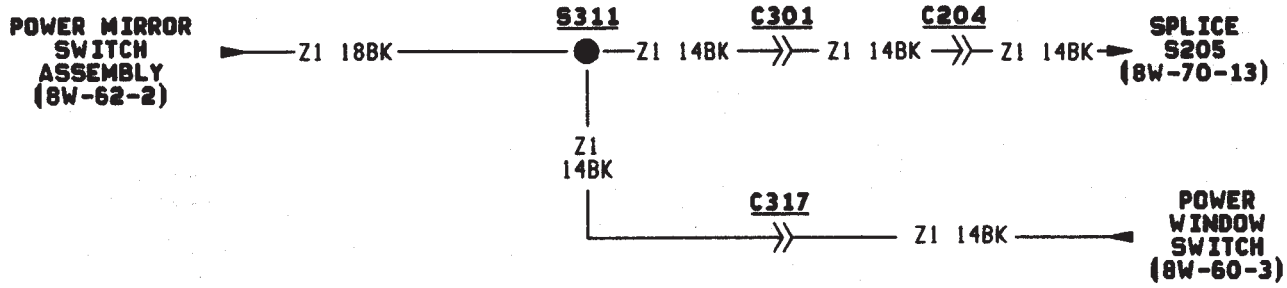
POWER MIRROR SWITCH ASSEMBLY (8W-62-2)
Z1 18BK
S311
Z1 14BK
C301
Z1 14BK
C204
Z1 14BK
SPLICE S205 (8W-70-13)
Z1 14BK
C317
Z1 14BK
POWER WINDOW SWITCH (8W-60-3)

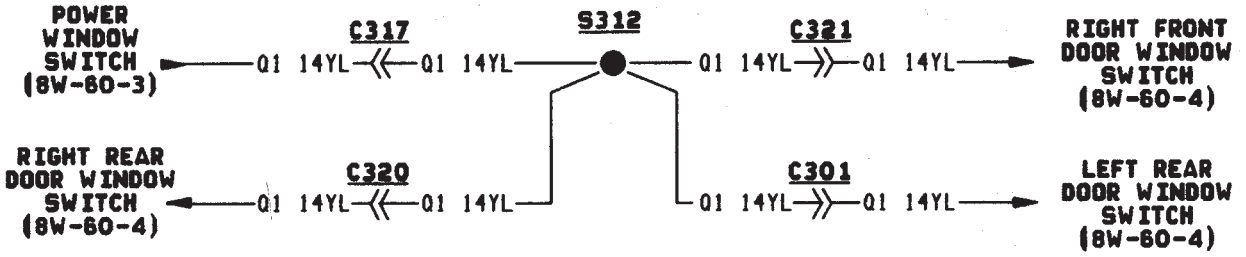
POWER WINDOW SWITCH (8W-60-3)
Q1 14YL
C317
Q1 14YL
S312
Q1 14YL
C321
Q1 14YL
RIGHT FRONT DOOR WINDOW SWITCH (8W-60-4)
RIGHT REAR DOOR WINDOW SWITCH (8W-60-4)
Q1 14YL
C320
Q1 14YL
Q1 14YL
C301
Q1 14YL
LEFT REAR DOOR WINDOW SWITCH (8W-60-4)

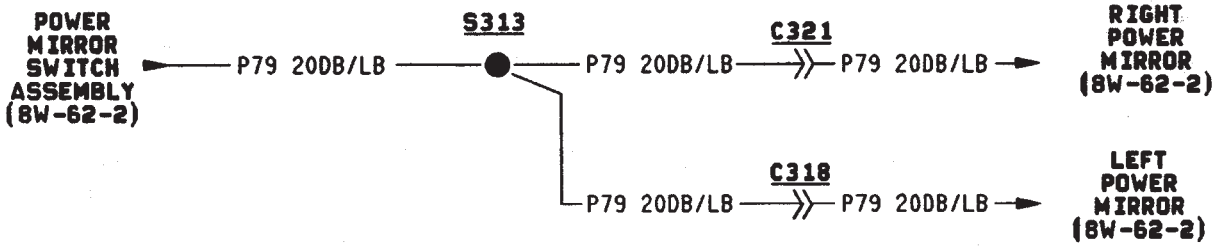
POWER MIRROR SWITCH ASSEMBLY (8W-62-2)
P79 20DB/LB
S313
P79 20DB/LB
C321
P79 20DB/LB
RIGHT POWER MIRROR (8W-62-2)
P79 20DB/LB
C318
P79 20DB/LB
LEFT POWER MIRROR (8W-62-2)

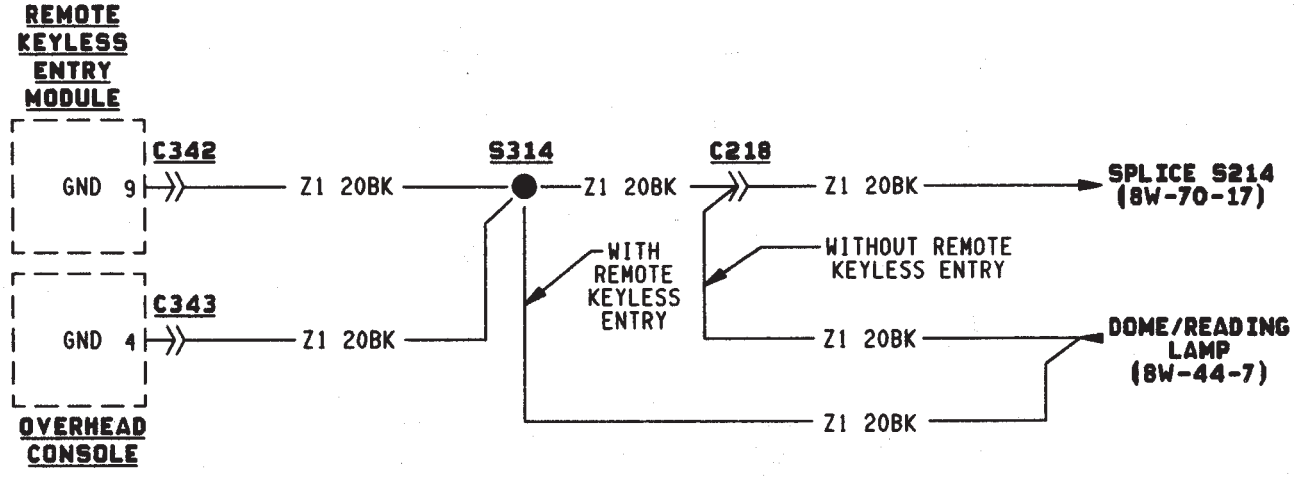
REMOTE KEYLESS ENTRY MODULE
C342
GND 9
Z1 20BK
S314
Z1 20BK
C218
Z1 20BK
SPLICE S214 (8W-70-17)
WITH REMOTE KEYLESS ENTRY
WITHOUT REMOTE KEYLESS ENTRY
C343
GND 4
Z1 20BK
Z1 20BK
DOME/READING LAMP (8W-44-7)
Z1 20BK
OVERHEAD CONSOLE

J958W-7

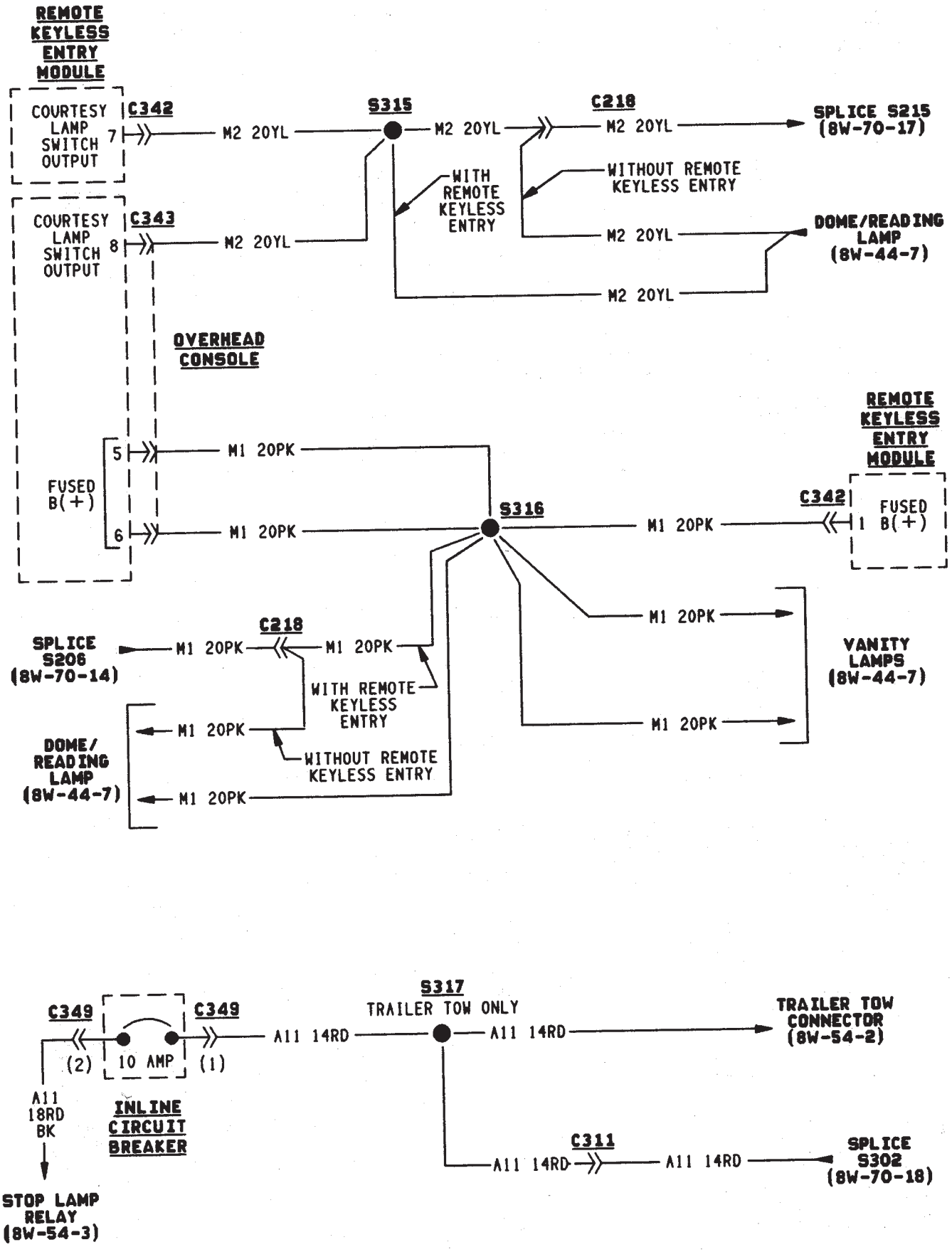
REMOTE KEYLESS ENTRY MODULE
COURTESY LAMP SWITCH OUTPUT
C342
7
M2 20YL
S315
M2 20YL
C218
M2 20YL
SPLICE S215 (8W-70-17)
WITH REMOTE KEYLESS ENTRY
WITHOUT REMOTE KEYLESS ENTRY
COURTESY LAMP SWITCH OUTPUT
C343
8
M2 20YL
M2 20YL
DOME/READING LAMP (8W-44-7)
M2 20YL
OVERHEAD CONSOLE
REMOTE KEYLESS ENTRY MODULE
5
M1 20PK
FUSED B(+)
6
M1 20PK
S316
M1 20PK
C342
1
FUSED B(+)
M1 20PK
C218
SPLICE S206 (8W-70-14)
M1 20PK
M1 20PK
VANITY LAMPS (8W-44-7)
WITH REMOTE KEYLESS ENTRY
M1 20PK
DOME/ READING LAMP (8W-44-7)
WITHOUT REMOTE KEYLESS ENTRY
M1 20PK
M1 20PK
C349
C349
(2)
10 AMP
(1)
A11 14RD
S317
TRAILER TOW ONLY
A11 14RD
TRAILER TOW CONNECTOR (8W-54-2)
A11 18RD BK
INLINE CIRCUIT BREAKER
C311
A11 14RD
A11 14RD
SPLICE S302 (8W-70-18)
STOP LAMP RELAY (8W-54-3)

J958W-7

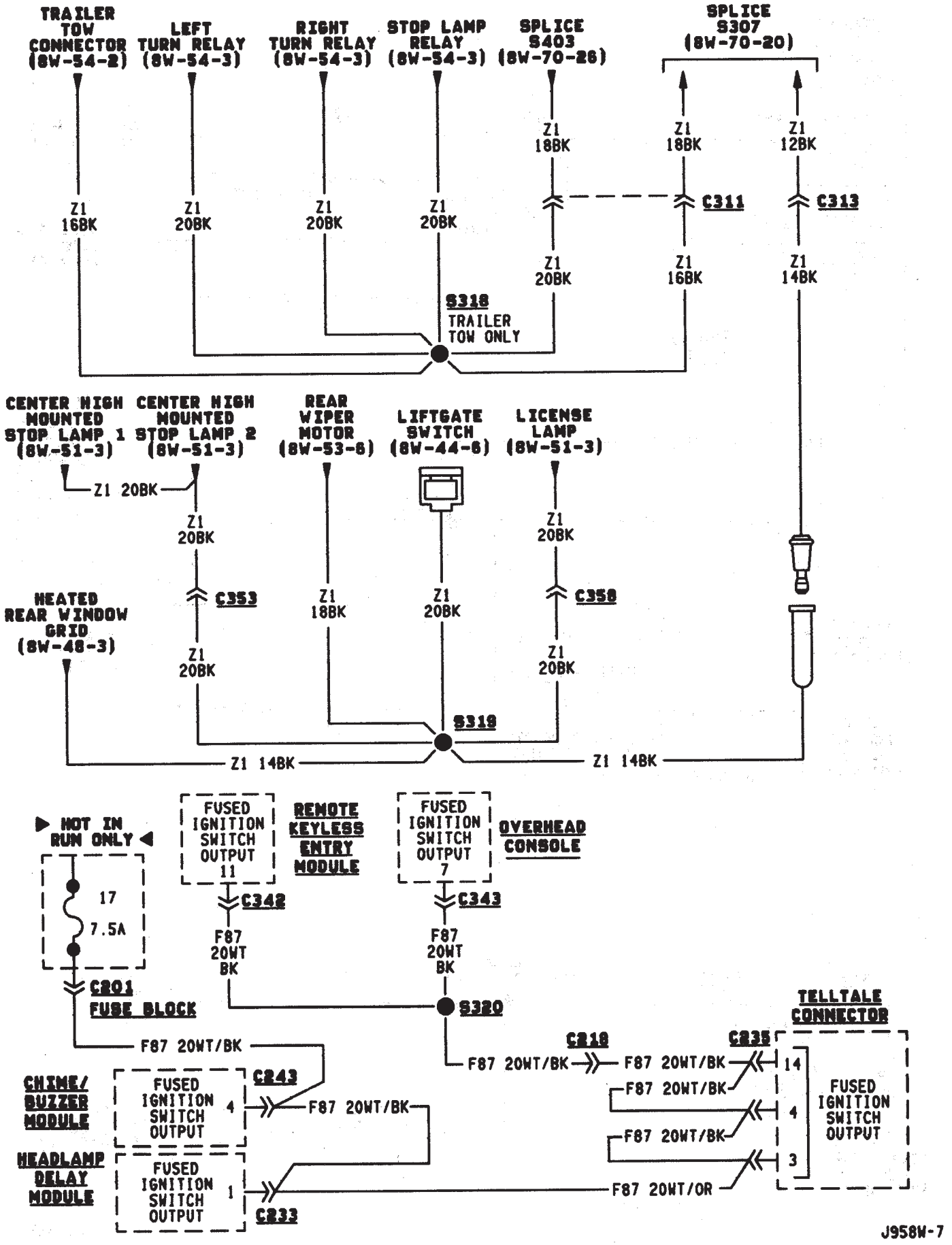
TRAILER TOW CONNECTOR (8W-54-2)
LEFT TURN RELAY (8W-54-3)
RIGHT TURN RELAY (8W-54-3)
STOP LAMP RELAY (8W-54-3)
SPLICE S403 (8W-70-26)
SPLICE S307 (8W-70-20)
Z1 16BK
Z1 20BK
Z1 20BK
Z1 20BK
Z1 18BK
Z1 20BK
Z1 18BK
Z1 16BK
Z1 12BK
Z1 14BK
C311
C313
S318
TRAILER TOW ONLY
CENTER HIGH MOUNTED STOP LAMP 1 (8W-51-3)
CENTER HIGH MOUNTED STOP LAMP 2 (8W-51-3)
REAR WIPER MOTOR (8W-53-6)
LIFTGATE SWITCH (8W-44-6)
LICENSE LAMP (8W-51-3)
Z1 20BK
Z1 20BK
Z1 18BK
Z1 20BK
Z1 20BK
Z1 20BK
C353
C358
HEATED REAR WINDOW GRID (8W-48-3)
Z1 20BK
Z1 20BK
S319
Z1 14BK
Z1 14BK
HOT IN RUN ONLY
17
7.5A
C201
FUSE BLOCK
FUSED IGNITION SWITCH OUTPUT 11
REMOTE KEYLESS ENTRY MODULE
FUSED IGNITION SWITCH OUTPUT 7
OVERHEAD CONSOLE
C342
C343
F87 20WT BK
F87 20WT BK
S320
F87 20WT/BK
C218
C235
TELLTALE CONNECTOR
F87 20WT/BK
F87 20WT/BK
F87 20WT/BK
F87 20WT/BK
14
4
3
FUSED IGNITION SWITCH OUTPUT
CHIME/ BUZZER MODULE
FUSED IGNITION SWITCH OUTPUT 4
C243
F87 20WT/BK
HEADLAMP DELAY MODULE
FUSED IGNITION SWITCH OUTPUT 1
C233
F87 20WT/OR

J958W-7

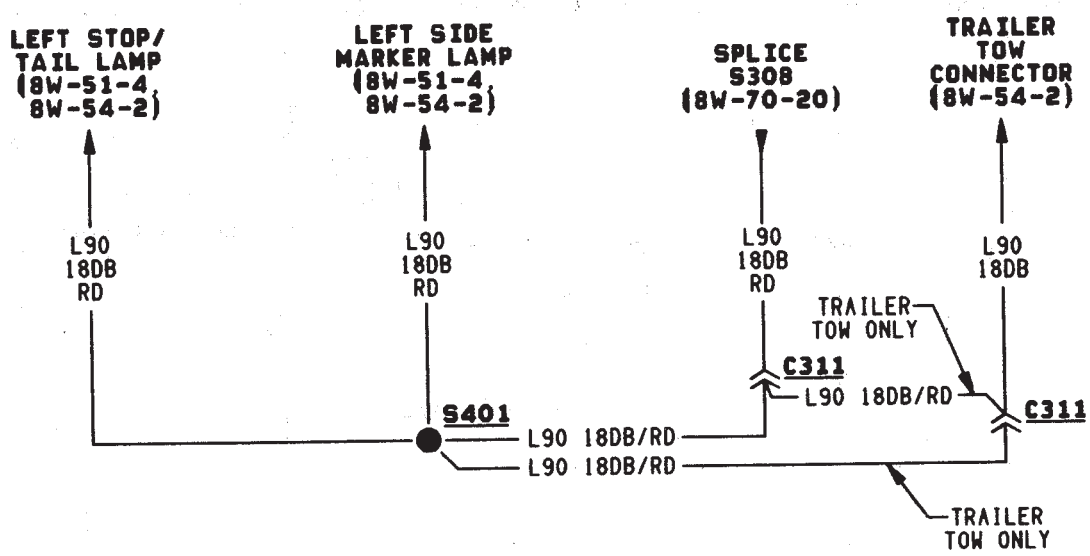
LEFT STOP/
TAIL LAMP
(8W-51-4,
8W-54-2)
LEFT SIDE
MARKER LAMP
(8W-51-4,
8W-54-2)
SPLICE
S308
(8W-70-20)
TRAILER
TOW
CONNECTOR
(8W-54-2)
L90
18DB
RD
L90
18DB
RD
L90
18DB
RD
L90
18DB
TRAILER
TOW ONLY
C311
L90 18DB/RD
C311
S401
L90 18DB/RD
L90 18DB/RD
TRAILER
TOW ONLY

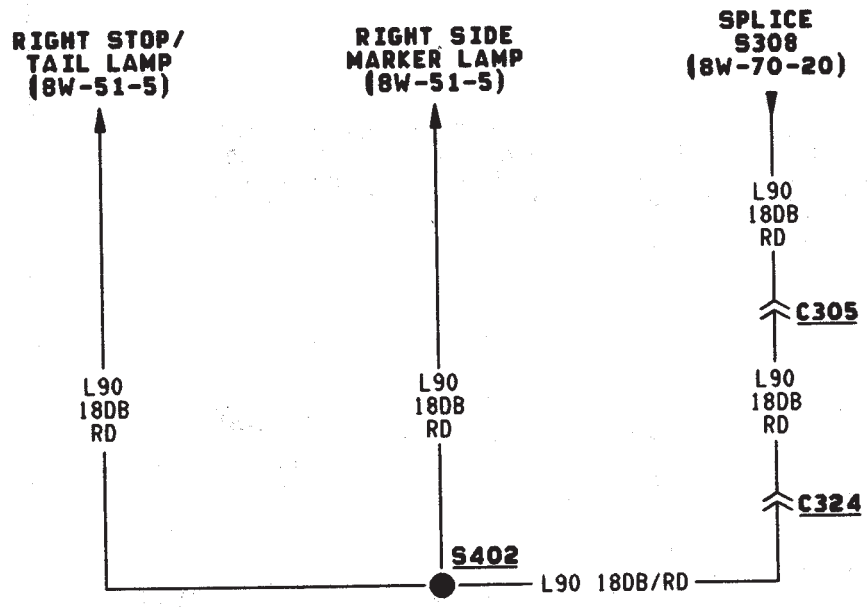
RIGHT STOP/
TAIL LAMP
(8W-51-5)
RIGHT SIDE
MARKER LAMP
(8W-51-5)
SPLICE
S308
(8W-70-20)
L90
18DB
RD
L90
18DB
RD
L90
18DB
RD
C305
L90
18DB
RD
C324
S402
L90 18DB/RD

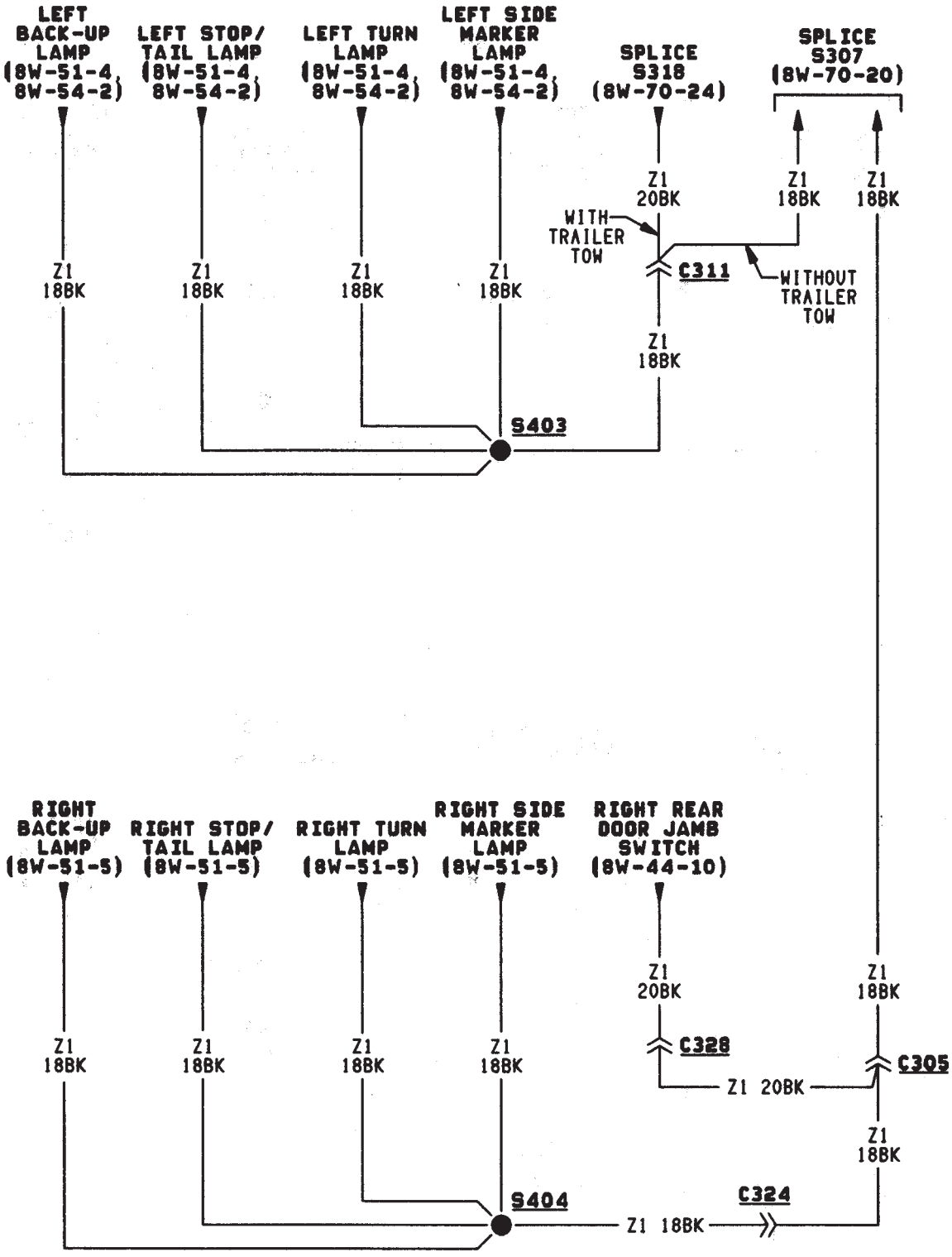
LEFT BACK-UP LAMP (8W-51-4, 8W-54-2)
LEFT STOP/ TAIL LAMP (8W-51-4, 8W-54-2)
LEFT TURN LAMP (8W-51-4, 8W-54-2)
LEFT SIDE MARKER LAMP (8W-51-4, 8W-54-2)
SPLICE S318 (8W-70-24)
SPLICE S307 (8W-70-20)
Z1 18BK
Z1 20BK
WITH TRAILER TOW
WITHOUT TRAILER TOW
C311
S403
RIGHT BACK-UP LAMP (8W-51-5)
RIGHT STOP/ TAIL LAMP (8W-51-5)
RIGHT TURN LAMP (8W-51-5)
RIGHT SIDE MARKER LAMP (8W-51-5)
RIGHT REAR DOOR JAMB SWITCH (8W-44-10)
C328
C305
Z1 20BK
S404
C324
Z1 18BK

J958W-7

CONNECTOR PIN OUTS

GENERAL INFORMATION

The pages referenced in this section show the connector, the circuits in the connector, and the pin that circuit occupies. Individual connector numbers are referenced on diagram pages throughout Group 8W.

CONNECTOR LOCATIONS

Component	Page
C101	8W-80-3
C102	8W-80-4
C103	8W-80-4
C104	8W-80-4
C105	8W-80-4
C106	8W-80-5
C107	8W-80-5
C108	8W-80-6, 7
C109	8W-80-8
C110	8W-80-8
C111	8W-80-9
C112	8W-80-10
C113	8W-80-10
C114	8W-80-10
C115	8W-80-10
C116	8W-80-11
C117	8W-80-11
C118	8W-80-11
C119	8W-80-11
C120	8W-80-11
C121	8W-80-12
C122	8W-80-12
C123	8W-80-12
C124	8W-80-12
C125	8W-80-12
C126	8W-80-12
C127	8W-80-13
C128	8W-80-13
C129	8W-80-13
C130	8W-80-13
C131	8W-80-13
C132	8W-80-14
C133	8W-80-14
C134	8W-80-15
C135	8W-80-15
C136	8W-80-15
C137	8W-80-15
C138	8W-80-15
C139	8W-80-16
C140	8W-80-16
C141	8W-80-16
C142	8W-80-16
C143	8W-80-16
C144	8W-80-17
C145	8W-80-17
C146	8W-80-17
C147	8W-80-17
C148	8W-80-17
C149	8W-80-18
C150	8W-80-18
C151	8W-80-18
C152	8W-80-18
C153	8W-80-18
C154	8W-80-19
C155	8W-80-19
C156	8W-80-19
C157	8W-80-19
C158	8W-80-20
C159	8W-80-20
C160	8W-80-20
C161	8W-80-20
C162	8W-80-22
C163	8W-80-21
C164	8W-80-21
C202	8W-80-21
C203	8W-80-21
C204	8W-80-22
C205	8W-80-22
C206	8W-80-22
C207	8W-80-22
C208	8W-80-23
C209	8W-80-23
C210	8W-80-23
C211	8W-80-23
C212	8W-80-23
C213	8W-80-24
C214	8W-80-24
C215	8W-80-24
C216	8W-80-24
C217	8W-80-24
C218	8W-80-25
C219	8W-80-25
C220	8W-80-25
C221	8W-80-25
C222	8W-80-25
C223	8W-80-26
C224	8W-80-26
C225	8W-80-26
C226	8W-80-26
C227	8W-80-26
C228	8W-80-27
C229	8W-80-27
C230	8W-80-27
C231	8W-80-28

Component	Page
C232	8W-80-28
C233	8W-80-28
C234	8W-80-28
C235	8W-80-29
C236	8W-80-29
C237	8W-80-29
C238	8W-80-29
C239	8W-80-30
C240	8W-80-30
C241	8W-80-30
C242	8W-80-30
C243	8W-80-30
C301	8W-80-31
C302	8W-80-31
C303	8W-80-31
C304	8W-80-31
C305	8W-80-31
C306	8W-80-32
C307	8W-80-32
C308	8W-80-32
C309	8W-80-32
C310	8W-80-32
C311	8W-80-33
C312	8W-80-33
C313	8W-80-33
C314	8W-80-33
C315	8W-80-33
C316	8W-80-34
C317	8W-80-34
C318	8W-80-34
C319	8W-80-34
C320	8W-80-35
C321	8W-80-35
C322	8W-80-35
C323	8W-80-35
C324	8W-80-36
C325	8W-80-36
C326	8W-80-36
C327	8W-80-36
C328	8W-80-36
C329	8W-80-37
C331	8W-80-37
C332	8W-80-37
C333	8W-80-37
C334	8W-80-38
C335	8W-80-38
C336	8W-80-38
C338	8W-80-38
C339	8W-80-38
C340	8W-80-39
C341	8W-80-39

Component	Page
C342	8W-80-40
C343	8W-80-40
C344	8W-80-40
C345	8W-80-41
C346	8W-80-41
C347	8W-80-41
C348	8W-80-41
C349	8W-80-42
C350	8W-80-42
C351	8W-80-42
C352	8W-80-42
C353	8W-80-42
C354	8W-80-43
C355	8W-80-43
C356	8W-80-43
C357	8W-80-43
C358	8W-80-43
C401	8W-80-44
C402	8W-80-44
C403	8W-80-41
C404	8W-80-44
C405	8W-80-44
C406	8W-80-45
C407	8W-80-45
C408	8W-80-45
C409	8W-80-45
C410	8W-80-45
C411	8W-80-46
C412	8W-80-46
C413	8W-80-46
C414	8W-80-46
C415	8W-80-46
C416	8W-80-47
C417	8W-80-47
C418	8W-80-47
C419	8W-80-47
C420	8W-80-47
C421	8W-80-48
C422	8W-80-48
C423	8W-80-48
C424	8W-80-48
C425	8W-80-49
C426	8W-80-49
C427	8W-80-49
C428	8W-80-49
C429	8W-80-50
C430	8W-80-50
C431	8W-80-50

C101

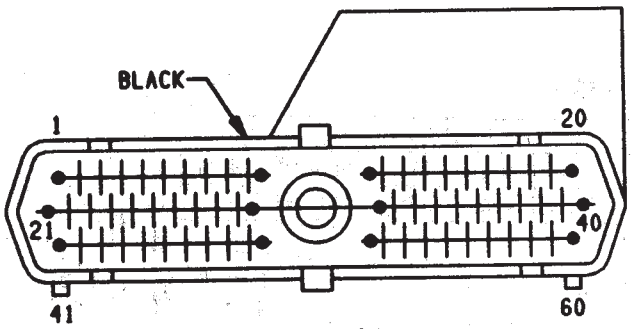

POWERTRAIN CONTROL MODULE

CAV	CIRCUIT	FUNCTION
1	K1 20DG/RD	MAP SENSOR SIGNAL
2	K2 16TN/BK	ENGINE COOLANT TEMP SENSOR SIGNAL
3	A14 14RD	FUSED B(+)
4	K4 18BK/LB	SENSOR GROUND
5	Z11 16BK/WT	GROUND
6	K6 20VT/WT	5—VOLT SUPPLY
7	K7 18OR	8—VOLT SUPPLY
8	—	—
9	A21 14DB	IGN SWITCH OUTPUT (RUN/START)
10	K10 18VT	POWER STEERING SWITCH SENSE
11	Z12 16BK/TN	GROUND
12	Z12 16BK/TN	GROUND
13	K14 18LB/BR	INJECTOR #4 DRIVER
14	K13 18YL/WT	INJECTOR #3 DRIVER
15	K12 18TN	INJECTOR #2 DRIVER
16	K11 18WT/DB	INJECTOR #1 DRIVER
17	—	—
18	—	—
19	K19 18GY	IGNITION COIL #1 DRIVER
20	K20 18DG	GENERATOR FIELD DRIVER
21	K21 16BK/RD	INTAKE AIR TEMP SENSOR SIGNAL
22	K22 18OR/DB	THROTTLE POSITION SENSOR SIGNAL
23	—	—
24	K24 18GY/BK	CRANKSHAFT POSITION SENSOR SIGNAL
25	D21 20PK	SCI TRANSMIT
* 26	D1 18VT/BR	CCD BUS (+) (4.0L AUTO ONLY)
27	C91 16LB	A/C CYCLING SWITCH SENSE
28	C90 16LG	A/C PRESSURE SWITCH OUTPUT
29	K29 18WT/PK	STOP LAMP SWITCH SENSE
30	T41 18BR/YL	PARK/NEUTRAL POSITION SWITCH SENSE
31	C27 20DB/PK	RADIATOR FAN RLY CONTROL (4.0L ONLY)
32	G3 20BK/PK	MALFUNCTION INDICATOR LAMP DRIVER
33	V36 20TN/RD	VEH SPEED CONTROL VACUUM SOL CONTROL
34	C13 20DB/OR	A/C COMPRESSOR CLUTCH RELAY CONTROL
35	—	—
36	G12 20DG/YL	GENERATOR LAMP DRIVER
37	—	—
38	K15 18PK/BK	INJECTOR #5 DRIVER (4.0L ONLY)
39	K39 18GY/RD	IDLE AIR CONTROL MOTOR #1 DRIVER
40	K40 18BR/WT	IDLE AIR CONTROL MOTOR #3 DRIVER
41	K41 18BK/DG	HEATED OXYGEN SENSOR SIGNAL
42	—	—
43	G21 20GY/LB	TACHOMETER SIGNAL
44	K44 18TN/YL	CAMSHAFT POSITION SENSOR SIGNAL
45	D20 20LG	SCI RECEIVE
* 46	D2 18WT/BK	CCD BUS (—) (4.0L AUTO ONLY)
47	G7 20WT/OR	VEH SPEED SENSOR SIGNAL
48	V31 20BR/RD	VEH SPEED CNTRL COAST/SET SW SENSE
49	V32 20YL/RD	VEH SPEED CNTRL ON/OFF SW SENSE
50	V33 20WT/LG	VEH SPEED CNTRL RESUME SW SENSE
51	K51 20DB/YL	AUTOMATIC SHUT DOWN RELAY CONTROL
52	—	—
53	V35 20LG/RD	VEH SPEED CNTRL VENT SOLENOID CNTRL
54	K54 20OR/BK	UP—SHIFT LAMP DRIVER (MAN TRANS)
54	K54 20OR/BK	TCC SOL RLY CTRL (2.5L AUTO TRANS ONLY)
55	—	—
56	—	—
57	A142 18DG/OR	AUTOMATIC SHUT DOWN RELAY OUTPUT
58	K16 18LG/BK	INJECTOR #6 DRIVER (4.0L ONLY)
59	K59 18VT/BK	IDLE AIR CONTROL MOTOR #4 DRIVER
60	K60 18YL/BK	IDLE AIR CONTROL MOTOR #2 DRIVER

* — INDICATES TWISTED PAIR D1 & D2

J958W-7

C102

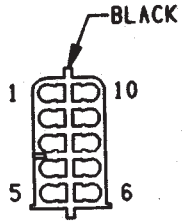

CAV	CIRCUIT
1	G465 16LB/BK
2	L3 14RD/OR
3	L61 18LG
4	L90 18DB/RD
5	Z1 16BK
6	L35 16BR/WT
7	L39 16LB
8	L60 18TN
9	L4 14VT/WT
10	F39 18PK/LG

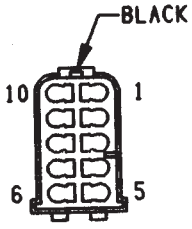

CAV	CIRCUIT
1	G465 16LB/BK
2	L3 16RD/OR
3	L61 18LG
3	L61 18LG
4	L90 18DB/RD
5	Z1 16BK
6	L35 18BR/WT
7	L39 16LB
8	L60 18TN
8	L60 18TN
9	L4 16VT/WT
10	F39 16PK/LG

C103

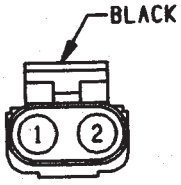

RADIATOR FAN MOTOR

CAV	CIRCUIT	FUNCTION
1	C25 16LG	RADIATOR FAN RELAY OUTPUT
2	Z1 16BK	GROUND

C104

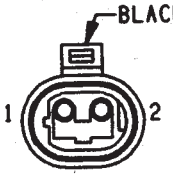

LEFT FRONT WHEEL SPEED SENSOR

	CAV	CIRCUIT	FUNCTION
*	1	B9 18RD	LEFT FRONT WHEEL SPEED SENSOR (+)
*	2	B8 18RD/DB	LEFT FRONT WHEEL SPEED SENSOR (−)

C105

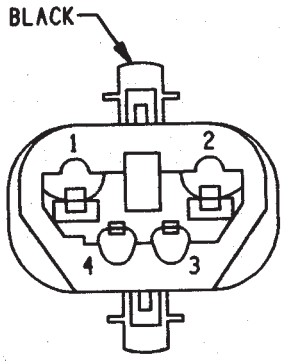

ABS PUMP MOTOR

	CAV	CIRCUIT	FUNCTION
	1	B233 12TN/BK	PUMP/MOTOR RELAY OUTPUT
	2	Z12 12BK/TN	GROUND
*	3	B219 18DB	PUMP/MOTOR SPEED SENSOR (−)
*	4	B220 18TN	PUMP/MOTOR SPEED SENSOR (+)

* — INDICATES TWISTED PAIRS (B8 & B9, B219 & B220)

1995 Jeep Cherokee/Wrangler
Publication No. 81-370-5146
TSB 26-07-95 September, 1995

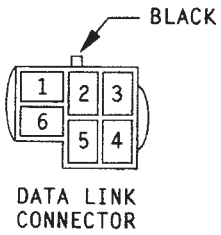

DATA LINK CONNECTOR

C106

CAV	CIRCUIT	FUNCTION
1	–	–
2	D20 20LG	SCI RECEIVE
	* D20 20LG	SCI RECEIVE
3	–	–
4	F12 18DB/WT	FUSED IGNITION SWITCH OUTPUT
5	D21 20PK	SCI TRANSMIT
	* D21 20PK	SCI TRANSMIT
6	Z11 16BK/WT	GROUND

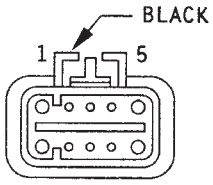

ABS HYDRAULIC ACTUATION UNIT

C107

CAV	CIRCUIT	FUNCTION
1	–	–
2	B245 16WT/LG	LEFT FRONT ISOLATION VALVE CONTROL
3	B249 16WT/TN	RIGHT FRONT ISOLATION VALVE CONTROL
4	B251 16WT/BK	REAR INLET VALVE CONTROL
5	B235 14GY/YL	ABS POWER RELAY OUTPUT
6	–	–
7	B254 16DG/OR	REAR DUMP VALVE CONTROL
8	B248 16DG/WT	RIGHT FRONT DUMP VALVE CONTROL
9	B243 16DG/BK	LEFT FRONT DUMP VALVE CONTROL
10	B235 14GY/YL	ABS POWER RELAY OUTPUT

C108

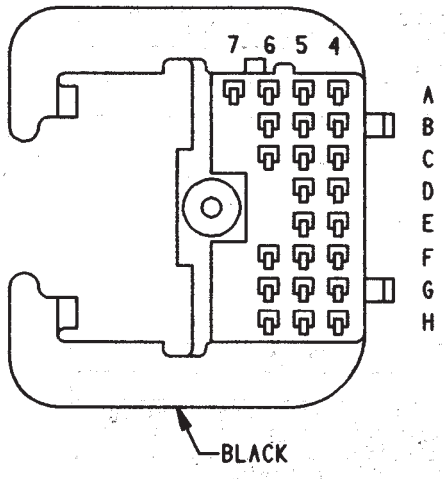

BULKHEAD—HIGH
(HEADLAMP/DASH
HARNESS)

CAV	CIRCUIT
A4	L9 18BK/WT
A5	C90 16LG
A6	A6 18RD/BK
A7	G3 20BK/PK
B4	G21 20GY/LB
B5	G106 20BK/YL
B6	A21 12DB
C4	A141 14DG/WT
C5	L10 18BR/LG
C6	G6 20GY
D4	L39 16LB
D5	L4 14VT/WT
D5	L4 16VT/WT
E4	A1 10RD
E5	C1 12DG
F4	G9 20GY/WT
F5	G9 20GY/BK
F6	K10 18VT
G4	Z1 12BK
G5	C91 16LB
G6	—
H4	L3 14RD/OR
H4	L3 16RD/OR
H5	V20 18BK/WT
H6	G29 20BK/TN

C108

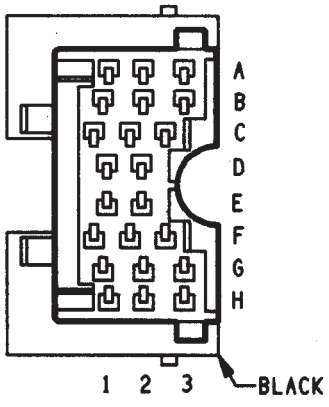

BULKHEAD—LOW
(HEADLAMP/DASH
HARNESS)

CAV	CIRCUIT
A1	L61 18LG
A2	K54 200R/BK
A3	F86 18LG/BK
B1	L90 18DB/RD
B2	V10 20BR
B3	V4 18RD/YL
C1	G107 20BK/RD
C1	G107 20BK/RD
C2	D2 18WT/BK
C2	D2 20WT/BK
C3	D1 18VT/BR
C3	D1 20VT/BR
D1	A3 12RD/WT
D2	A4 12BK/RD
E1	A7 12RD/YL
E2	X2 18DG/RD
E2	X2 18DG/RD
F1	G465 16LB/BK
F2	L60 18TN
F3	G20 18VT/YL
G1	L35 16BR/WT
G2	G12 20DG/YL
G3	V3 18BR/WT
H1	C21 16DB/OR
H2	A41 14YL
H3	V55 18TN/RD

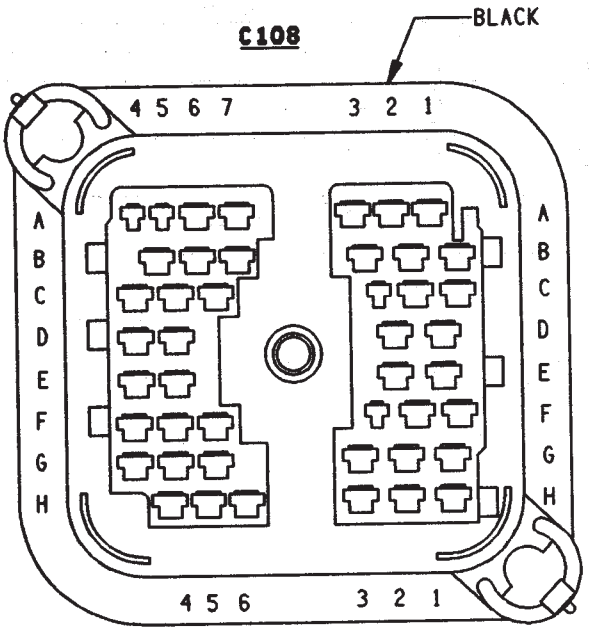

CAV	CIRCUIT
A1	L61 18LG
A1	L61 18LG
A2	K54 20LG/OR
A3	F86 18LG/BK
A4	L9 16PK/BK
A4	L9 16PK/BK
A5	C90 16LG/WT
A6	A6 12RD/DB
A7	G3 20BK/PK
B1	L90 18DB/RD
B1	L90 18DB/RD
B2	B11 20BR
B3	V4 18RD/BK
B4	G21 20GY/LB
B5	G106 20BK/YL
B6	A21 12DB/YL
C1	G107 20BK/LB
C4	A241 14DG/TN
C5	L10 18BR/LG
C6	G6 20GY
D1	A3 12RD/WT
D2	A4 12BK/RD
D4	L39 16LB
D5	L4 16VT/WT
E1	A7 12RD/YL
E2	X2 16DG/RD
E4	A1 12RD
E4	A1 12RD
E5	C1 12DG
F1	L3 16RD/YL
F2	L60 18TN
F2	L60 18TN
F3	G20 20VT/YL
F4	G9 18GY/OR
F5	G9 20GY/WT
F6	K10 18VT
G1	L35 16BR/WT
G2	G12 20DG/BK
G3	V3 18BR/TN
G4	Z1 12BK
G5	C91 16LB
G6	A38 12OR
H1	C21 16DB/OR
H2	A41 18YL
H3	V6 18TN/RD
H4	L3 16RD/OR
H5	V20 18BK/WT
H5	V20 18BK/WT
H6	G29 20BK/TN

1995 Jeep Cherokee/Wrangler
Publication No. 81-370-5146
TSB 26-07-95 September, 1995

C109

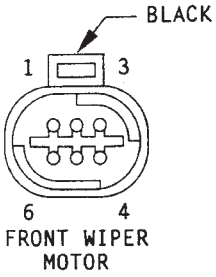

FRONT WIPER MOTOR

CAV	CIRCUIT	FUNCTION
1	–	–
2	V55 18TN/RD	WIPER PARK SWITCH SENSE
3	F86 18LG/BK	FUSED IGNITION SWITCH OUTPUT
4	Z1 16BK	GROUND
5	V3 18BK/WT	WIPER SWITCH LOW SPEED OUTPUT
6	V4 18RD/YL	WIPER SWITCH HIGH SPEED OUTPUT

C110

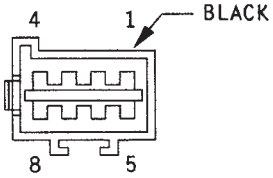

ABS DATA LINK CONNECTOR

CAV	CIRCUIT	FUNCTION
1	*D20 20LG	SCI RECEIVE
2	–	–
3	*F39 18PK/LG	FUSED IGN SW OUTPUT (RUN/START)
4	*D2 18WT/BK	CCD BUS(–)
5	*D21 20PK	SCI TRANSMIT
6	*D1 18VT/BR	CCD BUS (+)
7	*T137 16YL/BK	TRANS DIAG
8	*Z12 18BK/TN	GROUND

C111

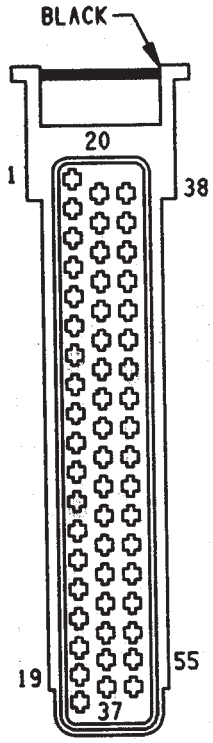

ANTI-LOCK
BRAKE SYSTEM
(ABS) CONTROL MODULE

	CAV	CIRCUIT	FUNCTION
	1	Z1 14BK	GROUND
	2	B243 16DG/BK	LEFT FRONT DUMP VALVE CONTROL
	3	B235 14GY/YL	ABS POWER RELAY OUTPUT
	4	—	—
	5	—	—
	6	—	—
	7	—	—
	8	—	—
	9	—	—
	10	—	—
	11	—	—
	12	—	—
	13	—	—
	14	—	—
	15	B116 18GY	PUMP/MOTOR RELAY CONTROL
	16	B210 18RD/BK	PEDAL TRAVEL SENSOR JUMPER
	17	—	—
	18	—	—
	19	Z1 14BK	GROUND
	20	B245 16WT/LG	LEFT FRONT ISOLATION VALVE CONTROL
	21	B248 16DG/WT	RIGHT FRONT DUMP VALVE CONTROL
	22	—	—
*	23	D1 18VT/BR	CCD BUSS (+)
	24	—	—
	25	B515 18YL/VT	G-SENSOR #1 SENSE
	26	B517 18PK/OR	G-SENSOR GROUND
*	27	B2 18YL	RIGHT REAR WHEEL SPEED SENSOR (+)
*	28	B3 18LG/DB	LEFT REAR WHEEL SPEED SENSOR (−)
*	29	B6 18WT/DB	RIGHT FRONT WHEEL SPEED SENSOR (−)
*	30	B8 18RD/DB	LEFT FRONT WHEEL SPEED SENSOR (−)
*	31	B219 18DB	PUMP/MOTOR SPEED SENSOR (−)
	32	L50 18WT/TN	STOP LAMP SWITCH OUTPUT
	33	B235 14GY/YL	ABS POWER RELAY OUTPUT
	34	B207 18PK	ABS POWER RELAY CONTROL
	35	—	—
	36	B254 16DG/OR	REAR DUMP VALVE CONTROL
	37	—	—
	38	B249 16WT/TN	RIGHT FRONT ISOLATION VALVE CONTROL
	39	—	—
	40	—	—
	41	B210 18RD/BK	PEDAL TRAVEL SENSOR JUMPER
*	42	D2 18WT/BK	CCD BUS (−)
	43	B516 18TN/WT	G-SENSOR #2 SENSE
	44	—	—
*	45	B1 18YL/DB	RIGHT REAR WHEEL SPEED SENSOR (−)
*	46	B4 18LG	LEFT REAR WHEEL SPEED SENSOR (+)
*	47	B7 18WT	RIGHT FRONT WHEEL SPEED SENSOR (+)
*	48	B9 18RD	LEFT FRONT WHEEL SPEED SENSOR (+)
*	49	B220 18TN	PUMP/MOTOR SPEED SENSOR (+)
	50	—	—
	51	—	—
	52	B205 18VT	ABS LAMP DRIVER
	53	B236 18LG/YL	FUSED IGNITION SWITCH OUTPUT
	54	B251 16WT/BK	REAR INLET VALVE CONTROL
	55	—	—

*—INDICATES TWISTED PAIRS (B1 & B2, B3 & B4, B6 & B7, B8 & B9, D1 & D2)

J958W-7

C112

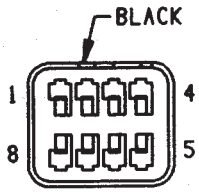

CAV	CIRCUIT
1	B1 18YL/DB
2	B517 18PK/OR
3	B516 18TN/WT
4	B515 18YL/WT
5	——
6	B4 18LG
7	B3 18LG/DB
8	B2 18YL

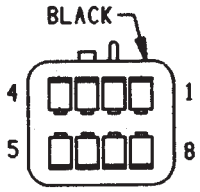

CAV	CIRCUIT
1	B1 18YL/DB
2	B517 18PK/OR
3	B516 18TN/WT
4	B515 18YL/VT
5	——
6	B4 18LG
7	B3 18LG/DB
8	B2 18YL

C113

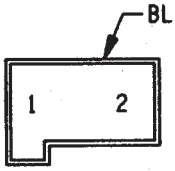

DIODE

CAV	CIRCUIT	FUNCTION
1	B235 14GY/YL	ABS POWER RELAY OUTPUT
2	B205 18VT	ABS LAMP DRIVER

C114

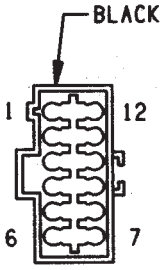

CAV	CIRCUIT
1	——
2	——
3	——
4	G32 20VT/LG
5	G31 20BK/LB
6	Z2 18BK/LG
6	Z2 18BK/LG
7	G7 20WT/OR
8	——
9	——
10	V30 20DB/RD
11	V32 20YL/RD
12	K29 18WT/PK

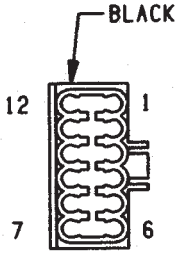

CAV	CIRCUIT
1	T17 18YL
2	T177 20TN
3	——
4	G32 18BK/LB
5	G31 18VT/LG
6	Z2 16BK/OR
7	G7 20WT/OR
8	——
9	——
10	V30 20DB/RD
11	V32 20YL/RD
11	V32 20YL/RD
12	K29 18WT/PK

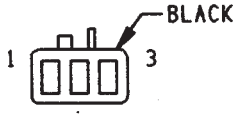

CAV	CIRCUIT
1	B205 18VT
2	B236 18LG/YL
3	L50 18WT/TN

C115

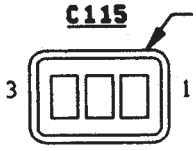

CAV	CIRCUIT
1	B205 18YL
2	B236 18LG/YL
3	L50 18WT/TN

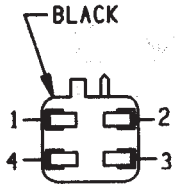

C116

CAV	CIRCUIT
1	V33 20WT/LG
2	V32 20YL/RD
3	V31 20BR/RD
4	F12 18DB/WT

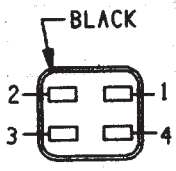

CAV	CIRCUIT
1	V33 20WT/LG
2	V32 20YL/RD
3	V31 20BR/RD
4	V34 20WT/RD

C117

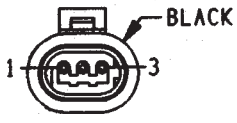

CRANKSHAFT POSITION SENSOR

CAV	CIRCUIT	FUNCTION
1	K24 18GY/BK	CRANKSHAFT POSITION SENSOR SIGNAL
2	K4 18BK/LB	SENSOR GROUND
3	K7 18OR	8—VOLT SUPPLY

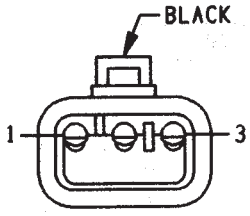

THROTTLE POSITION SENSOR

C118

CAV	CIRCUIT	FUNCTION
1	K4 18BK/LB	SENSOR GROUND
2	K22 18OR/DB	THROTTLE POSITION SENSOR SIGNAL
3	K6 20VT/WT	5—VOLT SUPPLY

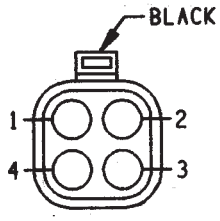

HEATED OXYGEN SENSOR

C119

CAV	CIRCUIT	FUNCTION
1	K4 18BK/LB	SENSOR GROUND
2	K41 18BK/DG	HEATED OXYGEN SENSOR SIGNAL
3	Z12 18BK/TN	GROUND
4	A141 14DG/WT	FUEL PUMP RELAY OUTPUT

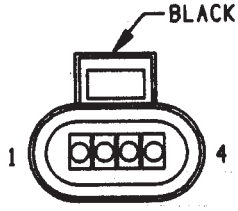

IDLE AIR CONTROL MOTOR

C120

CAV	CIRCUIT	FUNCTION
1	K39 18GY/RD	IDLE AIR CONTROL MOTOR DRIVER #1
2	K60 18YL/BK	IDLE AIR CONTROL MOTOR DRIVER #2
3	K40 18BR/WT	IDLE AIR CONTROL MOTOR DRIVER #3
4	K59 18VT/BK	IDLE AIR CONTROL MOTOR DRIVER #4

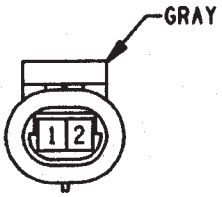

INTAKE AIR TEMPERATURE SENSOR

C121

CAV	CIRCUIT	FUNCTION
1	K21 16BK/RD	INTAKE AIR TEMPERATURE SENSOR SIGNAL
2	K4 16BK/LB	SENSOR GROUND

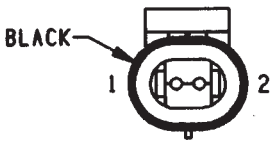

ENGINE COOLANT TEMPERATURE SENSOR

C122

CAV	CIRCUIT	FUNCTION
1	K2 16TN/BK	ENGINE COOLANT TEMP SENSOR SIGNAL
2	K4 16BK/LB	SENSOR GROUND

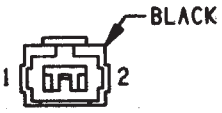

INJECTOR # 1

C123

CAV	CIRCUIT	FUNCTION
1	K11 18WT/DB	INJECTOR # 1 DRIVER
2	A142 18DG/OR	AUTOMATIC SHUT DOWN RELAY OUTPUT

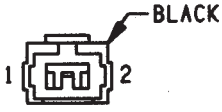

INJECTOR # 2

C124

CAV	CIRCUIT	FUNCTION
1	K12 18TN	INJECTOR # 2 DRIVER
2	A142 18DG/OR	AUTOMATIC SHUT DOWN RELAY OUTPUT

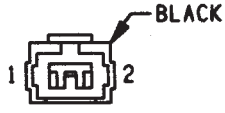

INJECTOR # 3

C125

CAV	CIRCUIT	FUNCTION
1	K13 18YL/WT	INJECTOR # 3 DRIVER
2	A142 18DG/OR	AUTOMATIC SHUT DOWN RELAY OUTPUT

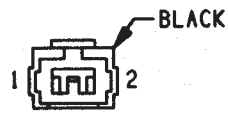

INJECTOR #4

C126

CAV	CIRCUIT	FUNCTION
1	K14 18LB/BR	INJECTOR # 4 DRIVER
2	A142 18DG/OR	AUTOMATIC SHUT DOWN RELAY OUTPUT

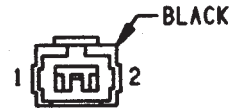

INJECTOR #5

C127

CAV	CIRCUIT	FUNCTION
1	K15 18PK/BK	INJECTOR #5 DRIVER
2	A142 18DG/OR	AUTOMATIC SHUT DOWN RELAY OUTPUT

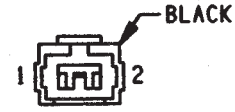

INJECTOR #6

C128

CAV	CIRCUIT	FUNCTION
1	K16 18LG/BK	INJECTOR #6 DRIVER
2	A142 18DG/OR	AUTOMATIC SHUT DOWN RELAY OUTPUT

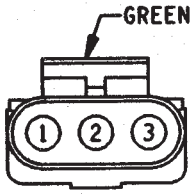

MAP SENSOR

C129

CAV	CIRCUIT	FUNCTION
1	K4 18BK/LB	SENSOR GROUND
2	K1 20DG/RD	MAP SENSOR SIGNAL
3	K6 20VT/WT	5—VOLT SUPPLY

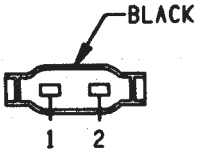

BRAKE WARNING SWITCH

C130

CAV	CIRCUIT	FUNCTION
1	G9 20GY/BK	BRAKE WARNING LAMP DRIVER
2	G9 20GY/WT	BRAKE WARNING LAMP DRIVER

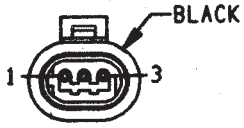

CAMSHAFT POSITION SENSOR

C131

CAV	CIRCUIT	FUNCTION
1	K44 18TN/YL	CAMSHAFT POSITION SENSOR SIGNAL
2	K4 18BK/LB	SENSOR GROUND
3	K7 18OR	8—VOLT SUPPLY

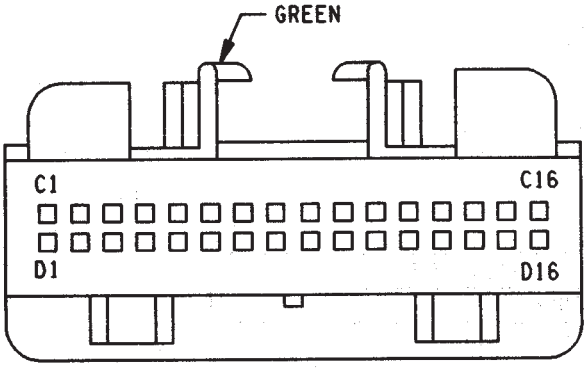

TRANSMISSION CONTROL MODULE

C132

CAV	CIRCUIT	FUNCTION
C1	—	—
C2	—	—
C3	T505 18TN/BK	TRANS OUTPUT SPEED SENSOR
C4	T137 16YL/BK	TRANS DATA LINK CONNECTOR
C5	—	—
C6	—	—
C7	—	—
C8	T506 18LG/BK	1-2 GEAR INPUT
C9	T507 18GY/BK	DRIVE GEAR INPUT
C10	K29 18WT/PK	STOP LAMP SWITCH SENSE
C11	T177 20TN	TRANS SWITCH POWER MODE
C12	—	—
C13	—	—
C14	T508 18WT/BK	SOLENOID S3 CONTROL
C15	T509 18VT/WT	SOLENOID S2 CONTROL
C16	T510 18DB/WT	SOLENOID S1 CONTROL
D1	—	—
D2	K22 18OR/DB	THROTTLE POS SENSOR SIGNAL
D3	K4 18BK/LB	SENSOR GROUND
D4	—	—
D5	—	—
D6	—	—
D7	Z12 18BK/TN	GROUND
D8	—	—
D9	—	—
D10	—	—
D11	—	—
D12	—	—
D13	—	—
D14	A14 14RD	FUSED B(+)
D15	—	—
D16	T17 18YL	FUSED B(+)

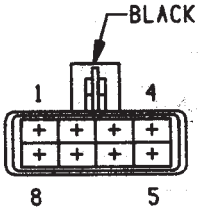

PARK/NEUTRAL POSITION SWITCH

C133

CAV	CIRCUIT	FUNCTION
1	T506 18LG/BK	1-2 GEAR INPUT
2	T507 18GY/BK	DRIVE GEAR INPUT
3	—	—
4	L10 18BR/LG	BACK-UP LAMP SWITCH OUTPUT
5	—	—
6	Z12 18BK/TN	GROUND
7	T41 18BR/YL	PARK/NEUTRAL POSITION SWITCH SENSE
8	F12 18DB/WT	FUSED IGNITION SWITCH OUTPUT

C134

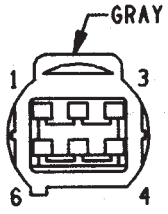

CAV	CIRCUIT
1	G7 18WT/OR
2	K4 18BK/LB
3	G107 18BK/RD
4	K7 18OR
5	—
6	Z1 18BK

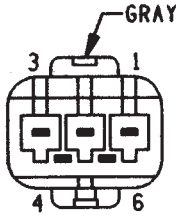

CAV	CIRCUIT
1	G7 20WT/OR
2	K4 18BK/LB
3	G107 20BK/RD
4	K7 18OR
5	—
6	Z1 18BK

C135

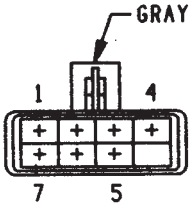

VALVE BODY SOLENOIDS

CAV	CIRCUIT	FUNCTION
1	G107 20BK/RD	4WD SENSE
2	T510 18DB/WT	SOLENOID S1 CONTROL
3	T509 18VT/WT	SOLENOID S2 CONTROL
4	T508 18WT/BK	SOLENOID S3 CONTROL
5	T505 18TN/BK	TRANSMISSION OUTPUT SPEED SENSOR
6	Z12 18BK/TN	GROUND
7	G106 20BK/YL	4WD INDICATOR LAMP

C136

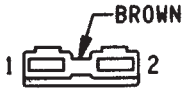

LOW WASHER FLUID LEVEL SWITCH

CAV	CIRCUIT	FUNCTION
1	F12 18DB/WT	FUSED IGNITION SWITCH OUTPUT
2	G29 20BK/TN	WASHER FLUID SWITCH SENSE

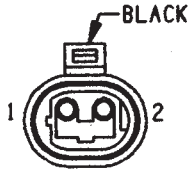

C137

CAV	CIRCUIT
1	A6 18RD/BK
2	Z1 18BK

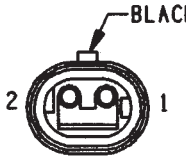

CAV	CIRCUIT
1	A6 18RD/BK
2	Z1 18BK

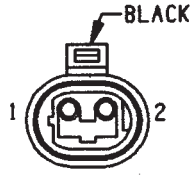

RIGHT FRONT WHEEL SPEED SENSOR

C138

	CAV	CIRCUIT	FUNCTION
*	1	B7 18WT	RIGHT FRONT WHEEL SPEED SENSOR (+)
*	2	B6 18WT/DB	RIGHT FRONT WHEEL SPEED SENSOR (—)

*— INDICATES TWISTED PAIR

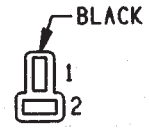

REAR WASHER PUMP MOTOR

C139

CAV	CIRCUIT	FUNCTION
1	V20 18BK/WT	REAR WASHER PUMP MOTOR CONTROL
2	Z1 18BK	GROUND
2	Z1 18BK	GROUND

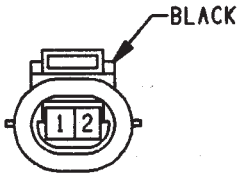

FRONT WASHER PUMP MOTOR

C140

CAV	CIRCUIT	FUNCTION
1	V10 20BR	WINDSHIELD WASHER SWITCH OUTPUT
2	Z1 18BK	GROUND

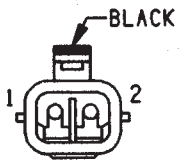

A/C AND HEATER BLOWER MOTOR

C141

CAV	CIRCUIT	FUNCTION
1	Z1 12BK	GROUND
2	C1 12DG	FUSED IGNITION SWITCH OUTPUT

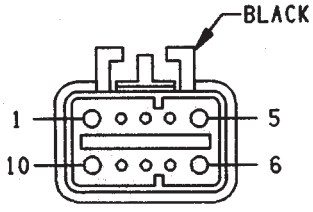

DAYTIME RUNNING LAMP MODULE

C142

CAV	CIRCUIT	FUNCTION
1	A21 12DB	IGNITION SWITCH OUTPUT (RUN/START)
2	G465 16LB/BK	HIGH BEAM INDICATOR DRIVER
3	—	—
4	—	—
5	L3 16RD/OR	DIMMER SWITCH HIGH BEAM OUTPUT
6	A3 12RD/WT	FUSED B(+)
7	G7 20WT/OR	VEHICLE SPEED SENSOR SIGNAL
8	Z12 18BK/TN	GROUND
9	—	—
10	L4 16VT/WT	DIMMER SWITCH LOW BEAM OUTPUT

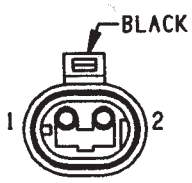

A/C LOW PRESSURE SWITCH

C143

CAV	CIRCUIT	FUNCTION
1	C21 16DB/OR	A/C SWITCH SENSE
2	C90 16LG	A/C PRESSURE SWITCH OUTPUT

C144

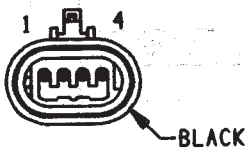

VEHICLE SPEED CONTROL SERVO

CAV	CIRCUIT	FUNCTION
1	Z1 18BK	GROUND
2	V30 20DB/RD	VEH SPEED CONTROL BRAKE SW OUTPUT
3	V35 20LG/RD	VEHICLE SPEED CTRL VENT SOL CONTROL
4	V36 20TN/RD	VEHICLE SPEED CTRL VACUUM SOL CONTROL

C145

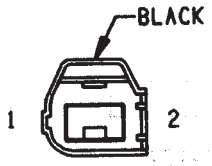

CAV	CIRCUIT
1	G31 18VT/LG
2	G32 18BK/LB

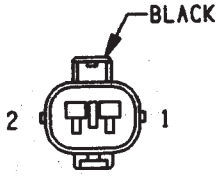

CAV	CIRCUIT
1	G31 18VT/LG
2	G32 18BK/LB

C146

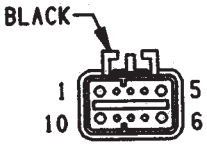

CAV	CIRCUIT
1	C3 14DB/BK
2	F12 18DB/WT
3	L10 18BR/LG
4	K19 18GY
5	T40 12BR
6	—
7	G6 20GY
8	—
9	K20 18DG
10	A142 18DG/OR

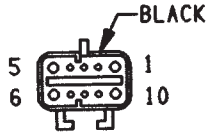

CAV	CIRCUIT
1	C3 14DB/BK
2	F12 18DB/WT
3	L10 18BR/LG
4	K19 18BK/GY
5	T40 12BR
6	—
7	G6 18GY
8	—
9	K20 18DG
10	A142 16DG/OR

C147

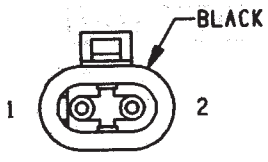

ENGINE OIL PRESSURE SENDING UNIT

CAV	CIRCUIT	FUNCTION
1	—	—
2	G6 18GY	ENGINE OIL PRESSURE SWITCH SENSE

C148

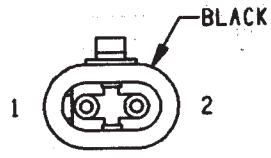

DISTRIBUTOR IGNITION COIL

CAV	CIRCUIT	FUNCTION
1	A142 16DG/OR	AUTOMATIC SHUT DOWN RELAY OUTPUT
2	K19 18BK/GY	IGNITION COIL #1 DRIVER

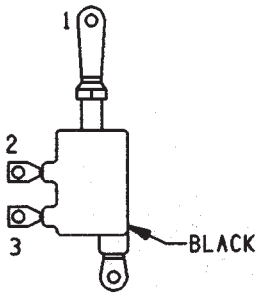

GENERATOR

C149

CAV	CIRCUIT	FUNCTION
1	Z0 8BK	GROUND
2	A142 18DG/OR	AUTOMATIC SHUT DOWN RELAY OUTPUT
3	K20 18DG	GENERATOR FIELD DRIVER

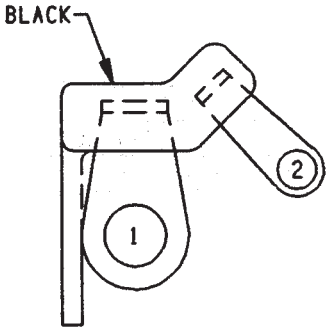

ENGINE STARTER MOTOR

C150

CAV	CIRCUIT	FUNCTION
1	A0 6D	B (+)
2	T40 14LG/BK	ENGINE STARTER MOTOR RELAY OUTPUT

C151
POWER DISTRIBUTION CENTER
(8W-11-2)

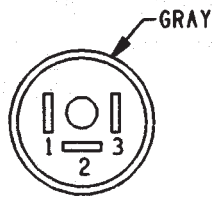

POWER STEERING PRESSURE SWITCH

C152

CAV	CIRCUIT	FUNCTION
1	Z12 18BK/TN	GROUND
2	—	—
3	K10 18DB/WT	POWER STEERING PRESSURE SWITCH SENSE

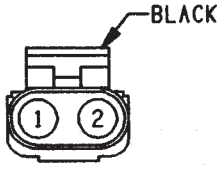

BACK-UP LAMP SWITCH

C153

CAV	CIRCUIT	FUNCTION
1	F12 18DB/WT	FUSED IGNITION SWITCH OUTPUT
2	L10 18BR/LG	BACK-UP LAMP SWITCH OUTPUT

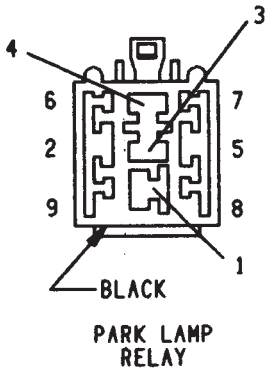

PARK LAMP RELAY

C154

CAV	CIRCUIT	FUNCTION
1	F39 16PK/LG	FUSED B (+)
2	L35 18BR/WT	PARK LAMP RELAY CONTROL
3	—	—
4	F39 16PK/LG	FUSED B (+)
5	L90 18DB/RD	PARK LAMP SWITCH OUPUT
6	—	—
7	—	—
8	—	—
9	—	—

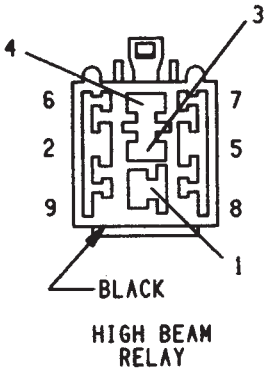

HIGH BEAM RELAY

C155

CAV	CIRCUIT	FUNCTION
1	F39 16PK/LG	FUSED B (+)
2	Z1 18BK	GROUND
3	L39 16LB	HIGH BEAM RELAY OUTPUT
4	—	—
5	G465 16LB/BK	HIGH BEAM INDICATOR DRIVER
6	—	—
7	—	—
8	—	—
9	—	—

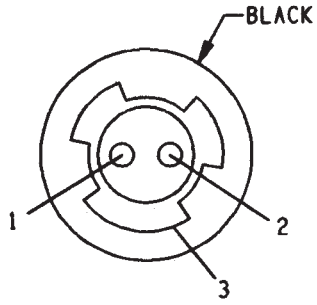

LEFT PARK AND TURN SIGNAL LAMP

C156

CAV	CIRCUIT	FUNCTION
1	L90 18DB/RD	PARK LAMP SWITCH OUTPUT
2	L61 18LG	LEFT TURN SIGNAL
3	Z1 18BK	GROUND

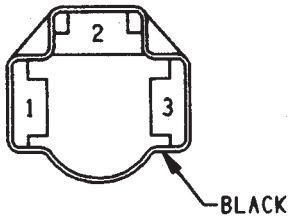

LEFT HEADLAMP

C157

CAV	CIRCUIT	FUNCTION
1	L3 16RD/OR	DIMMER SWITCH HIGH BEAM OUTPUT
1	L3 16RD/OR	DIMMER SWITCH HIGH BEAM OUTPUT
2	L4 16VT/WT	DIMMER SWITCH LOW BEAM OUTPUT
2	L4 16VT/WT	DIMMER SWITCH LOW BEAM OUTPUT
3	Z1 18BK	GROUND

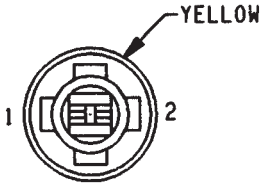

LEFT SIDE
MARKER LAMP

C158

CAV	CIRCUIT	FUNCTION
1	L61 18LG	LEFT TURN SIGNAL
2	L90 18DB/RD	PARK LAMP SWITCH OUTPUT

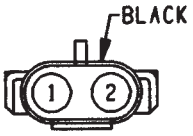

LEFT
FOG LAMP

C159

CAV	CIRCUIT	FUNCTION
1	L39 16LB	FOG LAMP SWITCH OUPUT
2	Z1 16BK	GROUND

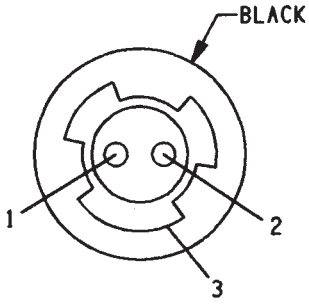

RIGHT PARK AND
TURN SIGNAL LAMP

C160

CAV	CIRCUIT	FUNCTION
1	L90 18DB/RD	PARK LAMP SWITCH OUTPUT
2	L60 18TN	RIGHT TURN SIGNAL
3	Z1 18BK	GROUND

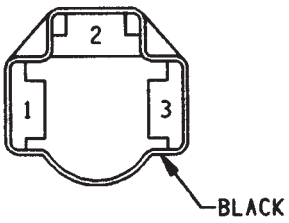

RIGHT
HEADLAMP

C161

CAV	CIRCUIT	FUNCTION
1	L3 16RD/OR	DIMMER SWITCH HIGH BEAM OUTPUT
2	L4 16VT/WT	DIMMER SWITCH LOW BEAM OUTPUT
3	Z1 18BK	GROUND

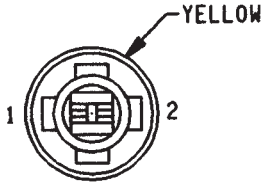

RIGHT SIDE
MARKER LAMP

C162

CAV	CIRCUIT	FUNCTION
1	L90 18DB/RD	PARK LAMP SWITCH OUTPUT
2	L60 18TN	RIGHT TURN SIGNAL

C163

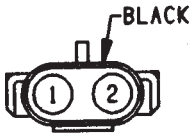

RIGHT
FOG LAMP

CAV	CIRCUIT	FUNCTION
1	L39 16LB	FOG LAMP SWITCH OUPUT
2	Z1 16BK	GROUND

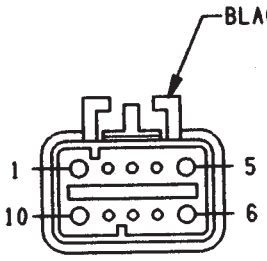

CAV	CIRCUIT
1	F12 18DB/WT
2	Z1 18BK
3	G107 20BK/RD
4	K4 18BK/LB
5	G7 20WT/OR
6	K7 18OR
7	T41 18BR/YL
8	L10 18BR/LG
9	—
10	T22 14DB/WT

C164

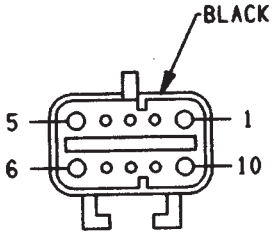

CAV	CIRCUIT
1	F12 18DB/WT
2	Z1 18GY
3	G107 18BK/RD
4	K4 18BK/LB
5	G7 18WT/OR
6	K7 18OR
7	T41 18BR/YL
8	L10 18BR/LG
9	—
10	T22 14DB/WT

C201

FUSE BLOCK
(8W-10-2)

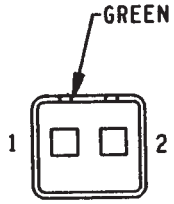

CAV	CIRCUIT
1	X53 20DG
2	X55 20BR/RD

C202

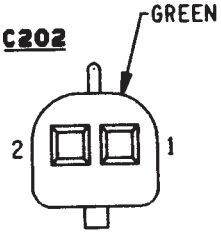

CAV	CIRCUIT
1	X53 20DG
2	X55 20BR/RD

C203

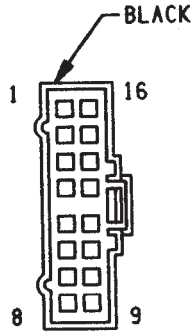

CAV	CIRCUIT
1	A241 14DG/RD
2	L60 18TN/DG
3	L90 18DB/RD
4	G4 20DB
5	L10 20BR/LG
6	L61 18LG
7	G9 20GY/BK
8	C15 12BK/RD
9	—
10	—
11	—
12	P34 18PK/BK
13	P2 18BK/WT
14	L50 18WT/TN
15	V20 18BK/YL
16	117 18LG/BK

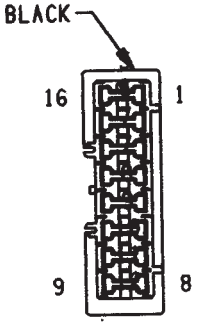

CAV	CIRCUIT
1	A241 14DG/TN
2	L60 18TN/DG
3	L90 18DB/RD
3	L90 18DB/RD
4	G4 20DB
5	L10 18BR/LG
6	L61 18LG/BK
7	G9 18GY/OR
7	203 18DG
8	C15 12BK/RD
9	—
10	—
11	—
12	P34 18PK/BK
13	P2 18BK/WT
14	L50 18WT/TN
15	V20 18BK/WT
16	—

C204

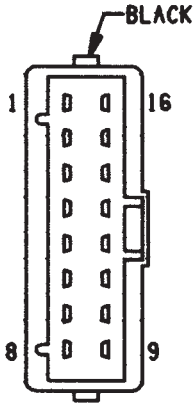

CAV	CIRCUIT
1	X58 20DB/OR
2	X52 20DB/WT
3	E2 20OR/BK
4	Z1 14BK
5	M1 20PK
5	M1 18PK
6	X57 20BR/LB
7	X51 20BR/YL
8	—
9	—
10	—
11	P36 20PK/VT
12	P35 20OR/VT
13	F20 18WT
14	V13 18BR/RD
15	G10 18LG
16	M2 20YL

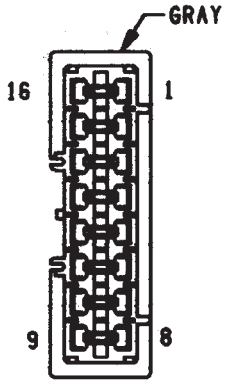

CAV	CIRCUIT
1	X58 18DB/OR
2	X52 18DB/WT
3	E2 20OR/BK
4	Z1 14BK
5	M1 20PK
6	X57 18BR/LB
7	X51 18BR/YL
8	—
9	—
10	—
11	P36 20PK/VT
12	P35 20OR/VT
13	F20 18WT
14	V13 18BR/RD
15	G10 18LG
16	M2 20YL

C205

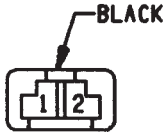

LEFT INSTRUMENT PANEL SPEAKER

CAV	CIRCUIT	FUNCTION
1	X53 20DG	LEFT FRONT SPEAKER (+)
1	X53 18DG	LEFT FRONT SPEAKER (+)
2	X55 20BR/RD	LEFT FRONT SPEAKER (−)
2	X55 18BR/RD	LEFT FRONT SPEAKER (−)

C206



LEFT COURTESY LAMP

CAV	CIRCUIT	FUNCTION
1	M1 20PK	FUSED B(+)
2	M2 20YL	COURTESY LAMP DRIVER

C207

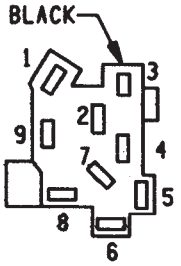

HEADLAMP SWITCH

CAV	CIRCUIT	FUNCTION
1	E2 20OR/BK	FUSED PANEL LAMPS DIMMER SW SIGNAL
2	F34 12TN/BK	FUSED B(+)
3	M2 20YL	COURTESY LAMP DRIVER
4	L7 18BK/YL	FUSED B(+)
4	L7 18BK/OR	FUSED B(+)
5	G26 20LB	KEY—IN IGNITION SWITCH SENSE
6	M11 20PK/LB	COURTESY LAMP SWITCH OUTPUT
6	M11 20PK/LB	COURTESY LAMP SWITCH OUTPUT
7	—	—
8	A3 12RD/WT	FUSED B(+)
9	L90 18DB/RD	PARK LAMP SWITCH OUTPUT
9	L90 18DB/RD	PARK LAMP SWITCH OUTPUT

C208



CAV	CIRCUIT
1	Z1 20BK
1	Z1 20BK
2	E2 200R/BK

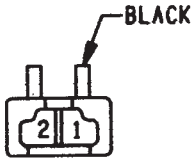

CAV	CIRCUIT
1	Z1 20BK
2	E2 200R/BK

C209

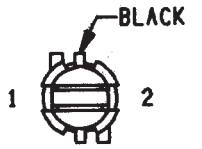

REAR WIPER/WASHER SWITCH LAMP

CAV	CIRCUIT	FUNCTION
1	E2 200R/BK	PANEL LAMPS DRIVER
2	Z1 20BK	GROUND

C210



REAR WIPER/WASHER SWITCH

CAV	CIRCUIT	FUNCTION
1	V20 18BK/WT	REAR WASHER PUMP MOTOR CONTROL
2	V13 18BR/RD	REAR WASHER RUN
3	F20 18WT	FUSED IGNITION SWITCH OUTPUT
4	V15 18LB/RD	WINDSHIELD WASHER RELAY CONTROL

C211

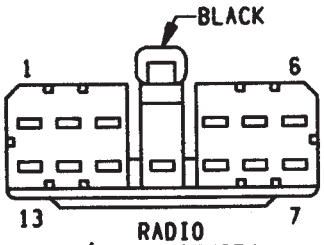

RADIO (FOR CIRCUIT/ FUNCTIONS SEE CONNECTOR C403)

CAV	CIRCUIT
1	X57 18BR/LB
2	X55 18BR/RD
3	X5 18LB/RD
4	E2 180R/BK
5	X56 18DB/RD
6	X58 18DB/OR
7	X52 18DB/WT
8	X54 18VT
9	F85 18VT/WT
10	M1 18PK
11	—
12	X53 18DG
13	X51 18BR/YL

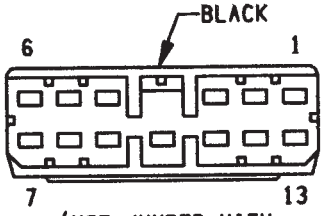

(USE JUMPER WITH 4-SPEAKER SYSTEM ONLY)

CAV	CIRCUIT
1	—
2	X55 18BR
2	X57 18BR
3	X5 18LB
4	E2 180R
5	X56 18DB
5	X58 18DB
6	—
7	—
8	X52 18VT
8	X54 18VT
9	F85 18WT
10	M1 18PK
11	—
12	X51 18DG
12	X53 18DG
13	—

C212

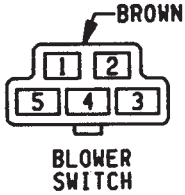

BLOWER SWITCH

CAV	CIRCUIT	FUNCTION
1	C4 12TN	LOW MOTOR BLOWER DRIVER
2	C1 12DG	FUSED IGNITION SWITCH OUTPUT
3	—	—
4	C6 12LB	M2 BLOWER MOTOR DRIVER
5	C43 12YL/BR	FUSED/IGNITION SWITCH OUTPUT(ACC/RUN)

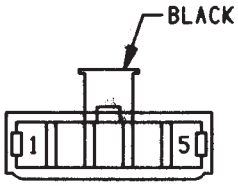

MODE SELECTOR SWITCH

C213

CAV	CIRCUIT	FUNCTION
1	C43 12YL/BR	FUSED IGNITION SWITCH OUTPUT (ACC/RUN)
2	C7 12BK/TN	HIGH BLOWER MOTOR DRIVER
3	—	—
4	C7 12BK/TN	HIGH BLOWER MOTOR DRIVER
5	C90 16LG/WT	A/C PRESSURE SWITCH OUTPUT

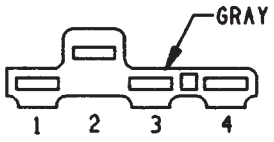

BLOWER RESISTOR

C214

CAV	CIRCUIT	FUNCTION
1	C6 12LB	M2 BLOWER MOTOR DRIVER
2	C1 12DG	FUSED IGNITION SWITCH OUTPUT
2	C1 12DG	FUSED IGNITION SWITCH OUTPUT
3	C4 12TN	LOW BLOWER MOTOR OUTPUT
4	C43 12YL/BR	FUSED IGNITION SWITCH OUTPUT (ACC/RUN)

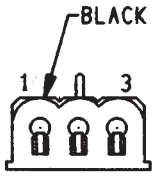

A/C CYCLING SWITCH

C215

CAV	CIRCUIT	FUNCTION
1	Z1 16BK	GROUND
2	C21 16DB/OR	A/C SWITCH SENSE
3	C91 16LB	A/C SWITCH SENSE

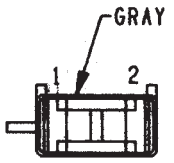

GLOVE BOX LAMP AND SWITCH

C216

CAV	CIRCUIT	FUNCTION
1	M1 20PK	FUSED B (+)
2	Z1 20BK	GROUND



RIGHT COURTESY LAMP

C217

CAV	CIRCUIT	FUNCTION
1	M1 20PK	FUSED B (+)
2	M2 20YL	COURTESY LAMP DRIVER

C218

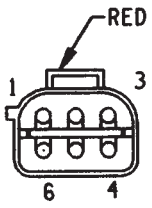

CAV	CIRCUIT
1	—
2	F87 20WT/BK
3	—
4	Z1 20BK
5	M1 20PK
6	M2 20YL

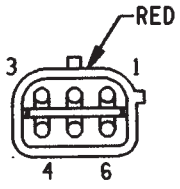

CAV	CIRCUIT
1	—
2	F87 20WT/BK
3	—
4	Z1 20BK
5	M1 20PK
6	M2 20YL

C219

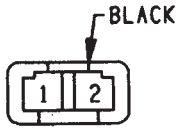

RIGHT INSTRUMENT PANEL SPEAKER

CAV	CIRCUIT	FUNCTION
1	X54 20VT	RIGHT FRONT SPEAKER (+)
1	X54 18VT	RIGHT FRONT SPEAKER (+)
2	X56 20DB/RD	RIGHT FRONT SPEAKER (−)
2	X56 18DB/RD	RIGHT FRONT SPEAKER (−)

C220

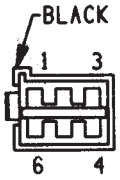

CAV	CIRCUIT
1	G32 20VT/LG
2	L90 18DB/RD
3	E2 200R/BK
4	G31 20BK/LB
5	Z2 18BK/LG
6	—

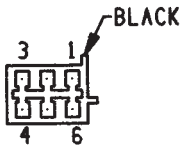

CAV	CIRCUIT
1	G32 20VT/LG
2	L90 20DB/RD
3	E2 200R/BK
4	G31 20BK/LB
5	Z2 20BK/LG
6	—

C221

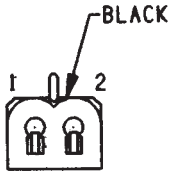

CAV	CIRCUIT
1	Z1 20BK
2	M2 20YL

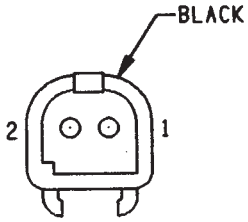

CAV	CIRCUIT
1	Z1 20BK
2	M2 20YL

C222

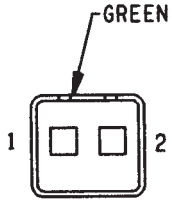

CAV	CIRCUIT
1	X54 20VT
2	X56 20DB/RD

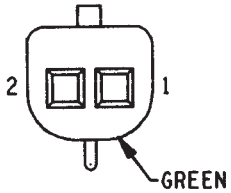

CAV	CIRCUIT
1	X54 20VT
2	X56 20DB/RD

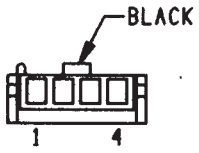

IGNITION KEY-IN WARNING SWITCH

C223

CAV	CIRCUIT	FUNCTION
1	M50 20YL/RD	KEY—IN LAMP DRIVER
2	Z1 20BK	GROUND
3	G26 20LB	KEY—IN IGNITION SWITCH SENSE
4	M11 20PK/LB	COURTESY LAMP SWITCH OUTPUT

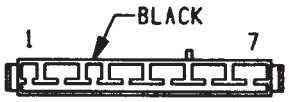

IGNITION SWITCH

C224

CAV	CIRCUIT	FUNCTION
1	A41 14YL	IGNITION SWITCH OUTPUT (START)
2	A21 12DB	IGNITION SWITCH OUTPUT (RUN/START)
3	G9 20GY/WT	BRAKE WARNING LAMP DRIVER
4	A1 12RD	FUSED B(+)
5	A38 12OR	IGNITION SWITCH OUTPUT (RUN)
6	A48 12VT	IGNITION SWITCH OUTPUT (RUN/ACC)
7	A1 12RD	FUSED B(+)

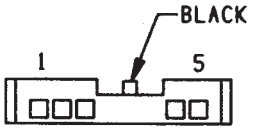

VEHICLE SPEED CONTROL SWITCH

C225

CAV	CIRCUIT	FUNCTION
1	X3 20BK/RD	HORN RELAY CONTROL
2	V33 20WT/LG	VEH SPEED CNTRL RESUME SW SENSE
3	V34 20WT/RD	VEH SPEED CONTROL SWITCH FEED
4	V31 20BR/RD	VEH SPEED CONTROL COAST/SET SW SENSE
5	V32 20YL/RD	VEH SPEED CONTROL ON/OFF SW SENSE

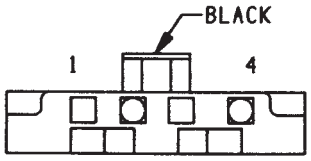

CIRCUIT BREAKER (WIPER)

C226

CAV	CIRCUIT	FUNCTION
1	—	—
2	F86 18LG/BK	FUSED IGNITION SWITCH OUTPUT
2	F86 18LG/BK	FUSED IGNITION SWITCH OUTPUT
3	—	—
4	A48 12VT/BR	IGNITION SWITCH OUTPUT (RUN/ACC)

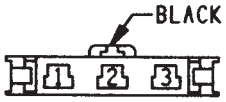

EXTENDED IDLE SWITCH (POLICE OPTION ONLY)

C227

CAV	CIRCUIT	FUNCTION
1	F60 18RD/WT	FUSED B(+)
2	Z1 20BK	GROUND
2	Z1 20BK	GROUND
3	K10 18VT	EXTENDED IDLE SWITCH SENSE

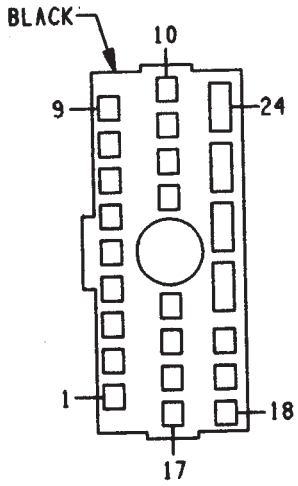

MULTI-FUNCTION SWITCH

C228

CAV	CIRCUIT	FUNCTION
1	—	—
2	—	—
3	V6 18DB	FUSED IGNITION SWITCH OUTPUT
4	V3 18BR/WT	WIPER SWITCH LOW SPEED OUTPUT
5	V4 18RD/YL	WIPER SWITCH HIGH SPEED OUTPUT
6	F86 18LG/BK	FUSED IGNITION SWITCH OUTPUT
7	V11 18BK/TN	LOW WASHER FLUID SENSE
8	V51 18WT	INTERMITTENT WIPER DELAY
9	V50 18LG	WIPER SWITCH DELAY OUTPUT
10	—	—
11	L60 18TN	RIGHT TURN SIGNAL
12	L60 18TN/DG	RIGHT TURN SIGNAL
13	L12 18VT/TN	HAZARD FLASHER OUTPUT
14	—	—
15	L61 18LG/BK	LEFT TURN SIGNAL
16	L61 18LG	LEFT TURN SIGNAL
17	L5 18GY	COMBINATION FLASHER OUTPUT (TURN SIGNALS)
18	—	—
19	—	—
20	—	—
21	L11 16PK/LG	COMBINATION FLASHER OUTPUT (HAZARD)
22	L3 16RD/OR	DIMMER SWITCH HIGH BEAM OUTPUT
23	F34 12TN/BK	FUSED B(+)
24	L4 16VT/WT	DIMMER SWITCH LOW BEAM OUTPUT

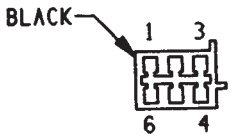

STOP LAMP SWITCH

C229

CAV	CIRCUIT	FUNCTION
1	V32 20YL/RD	VEH SPEED CONTROL ON/OFF SW SENSE
2	L50 18WT/TN	BRAKE LAMP SWITCH OUTPUT
2	L50 18WT/TN	BRAKE LAMP SWITCH OUTPUT
3	K29 18WT/PK	BRAKE SWITCH SENSE
4	Z1 18BK	GROUND
5	L9 16PK/BK	FUSED B(+)
6	V30 20DB/RD	VEH SPEED CONTROL BRAKE SW OUTPUT

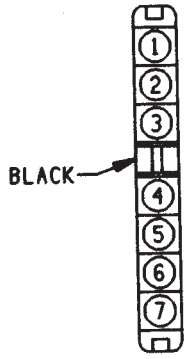

INTERMITTENT WIPER CONTROL MODULE

C230

CAV	CIRCUIT	FUNCTION
1	V51 18WT	INTERMITTENT WIPER DELAY
2	V11 18BK/TN	LOW WASHER FLUID SENSE
3	V4 18RD/YL	WIPER SWITCH HIGH SPEED OUTPUT
4	F86 20LG/BK	FUSED IGNITION SWITCH OUTPUT
5	V3 18BR/WT	WIPER SWITCH LOW SPEED OUTPUT
6	V6 18DB	FUSED IGNITION SWITCH OUTPUT
7	V50 18LG	WIPER SWITCH DELAY OUTPUT

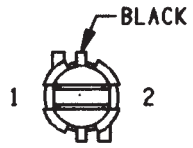

HEATER-A/C
PANEL LAMP

C231

CAV	CIRCUIT	FUNCTION
1	E2 200R/BK	PANEL LAMPS DRIVER
2	Z1 20BK	GROUND

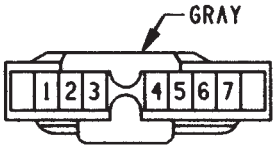

WIPER/WASHER SWITCH
(STANDARD)
OR
INTERMITTENT WIPER
CONTROL MODULE
(INTERMITTENT)

C232

CAV	CIRCUIT	FUNCTION
1	—	—
2	V11 20BR	LOW WASHER FLUID SENSE
3	V4 18RD/BK	WIPER SWITCH HIGH SPEED OUTPUT
4	F86 18LG/BK	FUSED IGNITION SWITCH OUTPUT
5	V3 18BR/TN	WIPER SWITCH LOW SPEED OUTPUT
6	V6 18TN/DB	FUSED IGNITION SWITCH OUTPUT
7	Z1 18BK	GROUND
7	Z1 20BK	GROUND

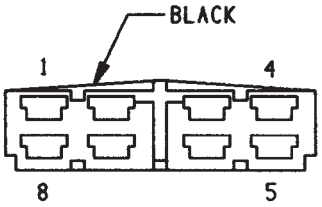

HEADLAMP
DELAY
MODULE

C233

CAV	CIRCUIT	FUNCTION
1	F87 20WT/OR	FUSED IGNITION SWITCH OUTPUT
1	F87 20WT/BK	FUSED IGNITION SWITCH OUTPUT
2	F34 12TN/BK	HEADLAMP SWITCH OUTPUT
3	Z1 18BK	GROUND
3	Z1 18BK	GROUND
4	X4 16GY/OR	FUSED B(+)
5	—	—
6	—	—
7	—	—
8	—	—

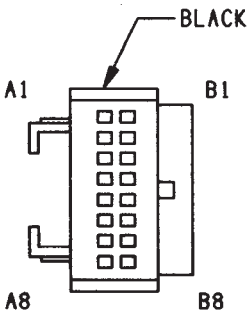

INSTRUMENT
CLUSTER

C234

CAV	CIRCUIT	FUNCTION
A1	G20 20VT/YL	ECT GAUGE SENSOR SIGNAL
A2	L61 18LG	LEFT TURN SIGNAL
A3	Z1 20BK	GROUND
A4	L3 16RD/YL	DIMMER SWITCH HIGH BEAM OUTPUT
A5	G7 20WT/OR	VEHICLE SPEED SENSOR SIGNAL
A6	G21 20GY/LB	TACHOMETER SIGNAL
A7	E2 200R/BK	PANEL LAMPS DRIVER
A8	F87 20WT/BK	FUSED IGNITION SWITCH OUTPUT
B1	G4 20DB	FUEL LEVEL SENSOR SIGNAL
B2	Z2 18BK/LG	GROUND
B3	—	—
B4	—	—
B5	—	—
B6	L60 18TN	RIGHT TURN SIGNAL
B7	G6 20GY	ENGINE OIL PRESSURE SWITCH SENSE
B8	G12 20DG/BK	GENERATOR LAMP DRIVER

C235

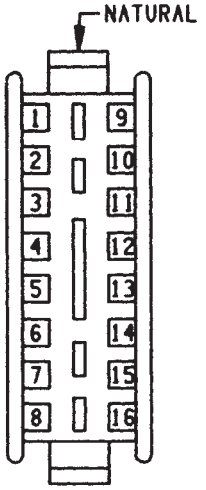

TELLTALE CONNECTOR

CAV	CIRCUIT	FUNCTION
1	G29 20BK/TN	WASHER FLUID SWITCH SENSE
2	G3 20BK/PK	MALFUNCTION INDICATOR LAMP DRIVER
3	F87 20WT/OR	FUSED IGNITION SWITCH OUTPUT
3	F87 20WT/BK	FUSED IGNITION SWITCH OUTPUT
4	F87 20WT/BK	FUSED IGNITION SWITCH OUTPUT
4	F87 20WT/BK	FUSED IGNITION SWITCH OUTPUT
5	—	—
6	B205 18YL	ABS LAMP DRIVER
7	K54 20LG/OR	UP-SHIFT LAMP DRIVER
8	B203 18DG	BRAKE WARNING/PARK BRAKE LAMP DRIVER
9	—	—
10	M1 20PK	FUSED B(+)
11	G106 20BK/YL	4WD INDICATOR LAMP
12	G107 20BK/LB	4WD SWITCH OUTPUT
13	—	—
14	F87 20WT/BK	FUSED IGNITION SWITCH OUTPUT
14	F87 20WT/BK	FUSED IGNITION SWITCH OUTPUT
15	G11 20WT	SEAT BELT WARNING LAMP DRIVER
16	Z1 20BK	GROUND
16	Z1 20BK	GROUND

C236

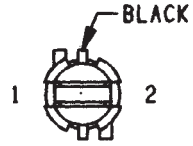

HEATED REAR WINDOW SWITCH LAMP

CAV	CIRCUIT	FUNCTION
1	E2 200R/BK	PANEL LAMPS DRIVER
2	Z1 20BK	GROUND

C237

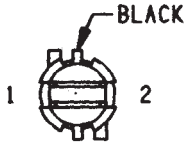

FOG LAMP ILLUMINATION OR EXTENDED IDLE SWITCH LAMP (POLICE OPTION ONLY)

CAV	CIRCUIT	FUNCTION
1	E2 200R/BK	PANEL LAMPS DRIVER
2	Z1 20BK	GROUND

C238

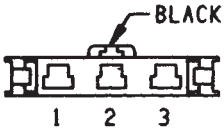

FOG LAMP SWITCH

CAV	CIRCUIT	FUNCTION
1	L39 16LB	FRONT FOG LAMPS SWITCH OUTPUT
2	L35 16BR/WT	FOG LAMP SWITCH CONTROL
3	Z1 20BK	GROUND
3	Z1 20BK	GROUND

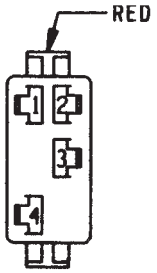

HEATED
REAR WINDOW
SWITCH

C239

CAV	CIRCUIT	FUNCTION
1	—	—
2	Z1 20BK	GROUND
2	Z1 20BK	GROUND
3	C80 18DB/WT	HEATED REAR WINDOW RELAY CONTROL
4	C15 12BK/RD	HEATED REAR WINDOW RELAY OUTPUT

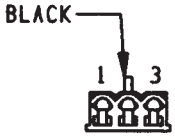

C240

CAV	CIRCUIT
1	Z1 20BK
1	Z1 20BK
2	G26 20LB
2	G26 20LB
3	M2 20YL



CAV	CIRCUIT
1	Z1 20BK
2	G26 20LB
3	M2 20YL

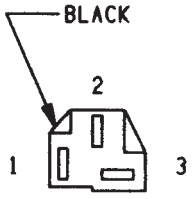

TIME
DELAY
RELAY

C241

CAV	CIRCUIT	FUNCTION
1	M2 20YL	PANEL LAMPS DRIVER
2	M50 20YL/RD	KEY-IN LAMP DRIVER
3	M1 20PK	FUSED B(+)

C242
RELAY CENTER
(8W-11-16)

C243

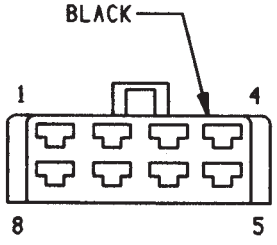

CHIME/BUZZER
MODULE

CAV	CIRCUIT	FUNCTION
1	G10 18LG	SEAT BELT SWITCH SENSE
2	Z1 20BK	GROUND
3	G11 20WT	PARK BRAKE SWITCH SENSE
4	F87 20WT/BK	FUSED IGNITION SWITCH OUTPUT
4	F87 20WT/BK	FUSED IGNITION SWITCH OUTPUT
5	—	—
6	M11 20PK/LB	COURTESY LAMP SWITCH OUTPUT
7	L7 18BK/YL	FUSED B(+)
8	—	—

C301

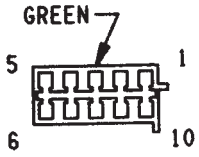

CAV	CIRCUIT
1	M1 18PK
2	—
3	P2 18BK/WT
3	P2 18BK/WT
4	Q27 14RD/BK
5	Q17 14DB/WT
6	P34 18PK/BK
6	P34 18PK/BK
7	Z1 14BK
8	Q1 14YL
9	P35 200R/VT
10	P36 20PK/VT

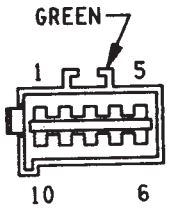

CAV	CIRCUIT
1	P38 18PK
1	P38 20PK
2	—
3	P2 18BK/WT
3	P2 18BK/WT
4	Q27 14RD/BK
5	Q17 14DB/WT
6	P34 18PK/BK
6	P34 18PK/BK
7	Z1 14BK
8	Q1 14YL
9	P35 200R/VT
9	P35 200R/VT
10	P36 20PK/VT
10	P36 20PK/VT

C302

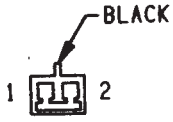

CAV	CIRCUIT
1	E2 200R/BK
2	Z1 20BK

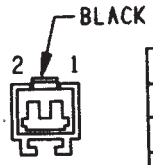

CAV	CIRCUIT
1	E2 200R
1	E2 200R
2	Z1 20BK
2	Z1 20BK

C303

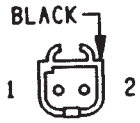

CAV	CIRCUIT
1	Z1 14BK
2	A11 14RD

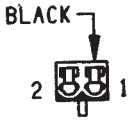

CAV	CIRCUIT
1	Z1 14BK
2	A11 14RD

C304

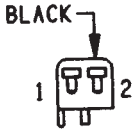

SEAT BELT SWITCH

CAV	CIRCUIT	FUNCTION
1	Z1 20BK	GROUND
2	G10 18LG	SEAT BELT SWITCH SENSE

C305

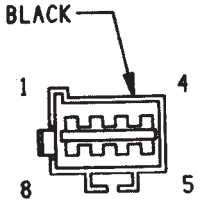

CAV	CIRCUIT
1	L10 20BR/LG
2	L60 18TN/DG
3	Z1 18BK
4	117 18LG/BK
5	L90 18DB/RD
6	L50 18WT/TN
7	M2 20YL
8	—

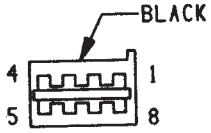

CAV	CIRCUIT
1	L10 20BR/LG
2	L60 18TN
3	Z1 20BK
3	Z1 18BK
4	117 18LG/BK
5	L90 18DB/RD
6	L50 18WT/TN
7	M2 20YL
8	—

J958W-7

C306

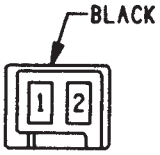

CAV	CIRCUIT
1	M2 20YL
2	Z1 20BK

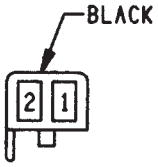

CAV	CIRCUIT
1	M2 20YL
2	Z1 20BK

C307

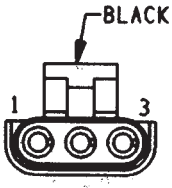

CAV	CIRCUIT
1	Z1 14BK
2	G4 20DB
3	A241 14DG/RD

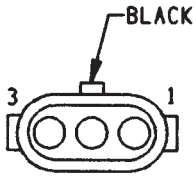

CAV	CIRCUIT
1	99 18BK
2	57 16VT
2	F9 140R

C308

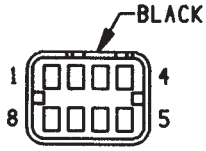

CAV	CIRCUIT
1	P2 18BK/WT
2	P34 18PK/BK
3	M4 20VT/YL
4	L50 18WT/TN
5	V13 18BR/RD
6	F20 18WT
7	V20 18BK/YL
8	L90 18DB/RD

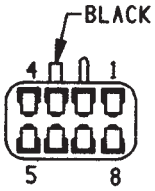

CAV	CIRCUIT
1	P2 18BK/WT
2	P34 18PK/BK
3	M4 20VT/YL
4	L50 18WT/TN
5	V13 18BR/RD
6	F20 18WT
7	V20 18BK/YL
8	L90 18DB/RD

C309

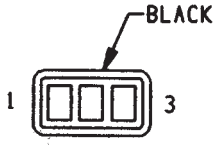

CAV	CIRCUIT
1	M1 20PK
2	M2 20YL
3	M4 20VT/YL

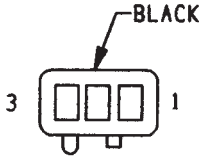

CAV	CIRCUIT
1	M1 20PK
2	M2 20YL
3	G71 20VT/YL
3	M4 20VT/YL

C310

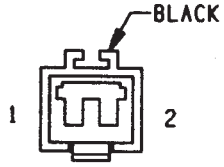

CAV	CIRCUIT
1	96 14LB
2	—

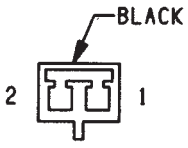

CAV	CIRCUIT
1	96 14LB
2	—

C311

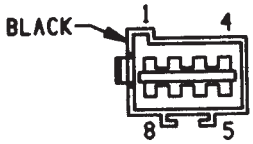

CAV	CIRCUIT
1	L10 18BR/LG
2	L61 18LG
3	Z1 18BK
4	L36 18LG/BK
5	L90 18DB/RD
6	L50 18WT/TN
6	L50 18WT/TN
7	A11 14RD
8	L60 18TN

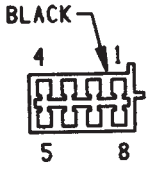

CAV	CIRCUIT
1	L10 20BR/LG
2	L61 18LG
3	Z1 18BK
4	117 18LG/BK
5	L90 18DB/RD
6	L50 18WT/TN
6	L50 18WT/TN
7	A11 14RD
8	L60 18TN/DG

(TRAILER TOW HARNESS ONLY)

CAV	CIRCUIT
1	L10 18BR/LG
1	L10 18BR/LG
2	L61 18LG
2	L61 18LG
3	Z1 20BK
4	L36 18LG/BK
5	L90 18DB/RD
5	L90 18DB/RD
6	L50 18WT/TN
6	
6	

C312

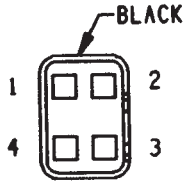

CAV	CIRCUIT
1	X58 20DB/OR
2	X52 20DB/WT
3	X57 20BR/LB
4	X51 20BR/YL

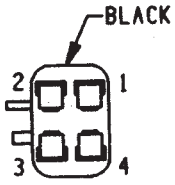

CAV	CIRCUIT
1	X58 20DB/OR
2	X52 20DB/WT
3	X57 20BR/LB
4	X51 20BR/YL

C313

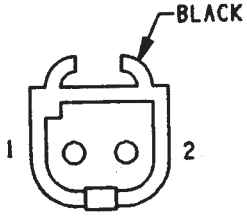

CAV	CIRCUIT
1	Z1 12BK
2	C15 12BK/RD

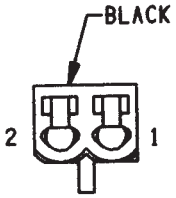

CAV	CIRCUIT
1	Z1 14BK
2	C15 14BK/RD

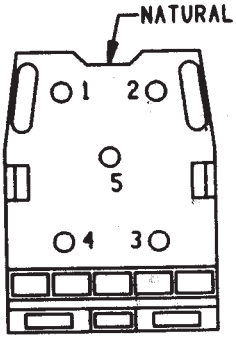

LEFT REAR DOOR WINDOW SWITCH

C314

CAV	CIRCUIT	FUNCTION
1	Q12 14BR	LT RR P/W UP/DOWN CONTROL
2	Q27 14RD/BK	LT RR P/W UP/DOWN CONTROL
3	Q22 14VT	LT RR P/W UP/DOWN CONTROL
4	Q17 14DB/WT	LT RR P/W UP/DOWN CONTROL
5	Q1 14YL	POWER WINDOW MASTER SWITCH OUTPUT

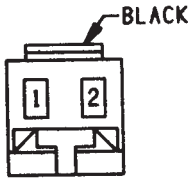

LEFT REAR DOOR LOCK MOTOR

C315

CAV	CIRCUIT	FUNCTION
1	P2 18BK/WT	DOOR LOCK RELAY OUTPUT
2	P34 18PK/BK	DOOR UNLOCK DRIVER

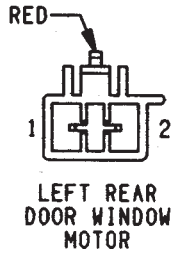

LEFT REAR DOOR WINDOW MOTOR

C316

CAV	CIRCUIT	FUNCTION
1	Q12 14BR	LT RR P/W UP/DOWN CONTROL
2	Q22 14VT	LT RR P/W UP/DOWN CONTROL

C317

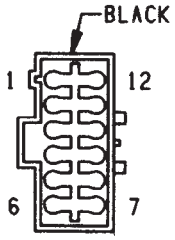

CAV	CIRCUIT
1	Q16 14BR/WT
2	Q26 14VT/WT
3	F81 12TN
4	Q1 14YL
5	Q18 14GY/BK
6	Q17 14DB/WT
7	—
8	P80 20YL/BK
9	Z1 14BK
10	P38 18PK
10	P38 20PK
11	Q27 14RD/BK
12	Q28 14DG/WT

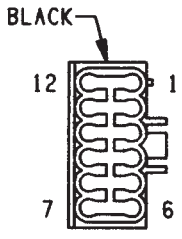

CAV	CIRCUIT
1	Q16 14BR/WT
2	Q26 14VT/WT
3	F81 12TN
4	Q1 14YL
5	Q18 14GY/BK
6	Q17 14DB/WT
7	—
8	P80 20YL/BK
9	Z1 14BK
10	P38 14OR/WT
11	Q27 14RD/BK
12	Q28 14DG/WT

C318

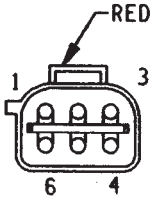

CAV	CIRCUIT
1	P36 20PK/VT
2	P34 18PK/BK
3	P2 18BK/WT
4	P35 20OR/VT
5	P81 20DB
6	P79 20DB/LB

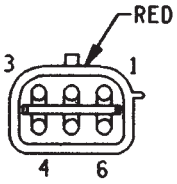

CAV	CIRCUIT
1	P36 14PK/VT
2	P34 18PK/BK
3	P2 18BK/WT
4	P35 14OR/VT
5	P81 20DB
6	P79 20DB/LB

C319

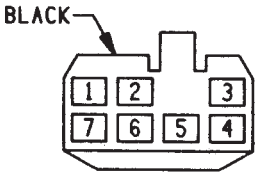

POWER MIRROR SWITCH ASSEMBLY

CAV	CIRCUIT	FUNCTION
1	P38 20PK	FUSED B(+)
2	Z1 18BK	GROUND
3	P79 20DB/LB	GROUND
4	P80 20YL/BK	UP/DOWN MOTOR—LEFT
5	P81 20DB	RIGHT/LEFT MOTOR—LEFT
6	P77 20WT/BK	RIGHT/LEFT MOTOR—RIGHT
7	P78 20YL/LG	UP/DOWN MOTOR—RIGHT

C320

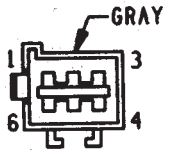

CAV	CIRCUIT
1	—
2	P34 18PK/BK
2	P34 18PK/BK
3	P2 18BK/WT
3	P2 18BK/WT
4	Q18 14GY/BK
5	Q28 14DG/WT
6	Q1 14YL

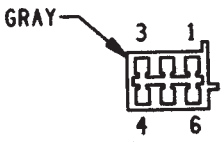

CAV	CIRCUIT
1	—
2	P34 18PK/BK
3	P2 18BK/WT
4	Q33 14BR/LB
5	Q28 14DG/WT
6	Q1 14YL

C321

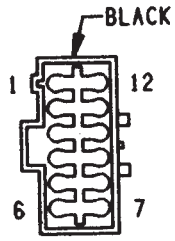

CAV	CIRCUIT
1	P38 20PK
2	P35 20OR/VT
3	P36 20PK/VT
4	P2 18BK/WT
5	P34 18PK/BK
6	Q1 14YL
7	—
8	P79 20DB/LB
9	P77 20WT/BK
10	P78 20YL/LG
11	Q16 14BR/WT
12	Q26 14VT/WT

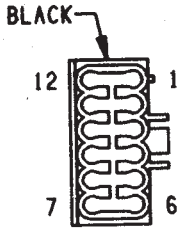

CAV	CIRCUIT
1	P38 14OR/WT
2	P35 14OR/VT
3	P36 14PK/VT
4	P2 18BK/WT
5	P34 18PK/BK
6	Q1 14YL
7	—
8	P79 20DB/LB
9	P77 20WT/BK
10	P78 20YL/LG
11	Q16 14BR/WT
12	Q26 14VT/WT

C322

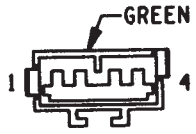

CAV	CIRCUIT
1	—
2	P35 20OR/VT
2	P35 20OR/VT
3	P36 20PK/VT
3	P36 20PK/VT
4	—

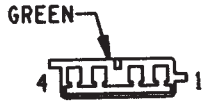

CAV	CIRCUIT
1	G68 20PK/OR
2	P35 20OR/VT
3	P36 20PK/VT
4	G72 20DG/OR

C323

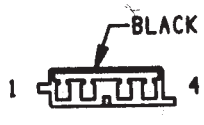

REAR WIPER MOTOR

CAV	CIRCUIT	FUNCTION
1	Z1 18BK	GROUND
2	V20 18BK/YL	REAR WASHER PUMP MOTOR CONTROL
3	V13 18BR/RD	REAR WASHER RUN
4	F20 18WT	FUSED IGNITION SWITCH OUTPUT

C324

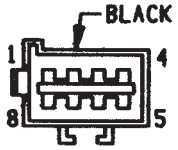

CAV	CIRCUIT
1	L10 18BR/LG
2	L60 18TN
3	Z1 18BK
4	—
5	L90 18DB/RD
6	L50 18WT/TN
7	—
8	—

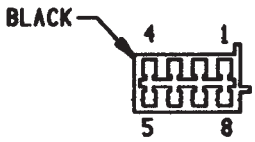

CAV	CIRCUIT
1	L10 20BR/LG
2	L60 18TN
3	Z1 18BK
4	117 18LG/BK
5	L90 18DB/RD
6	L50 18WT/TN
7	—
8	—

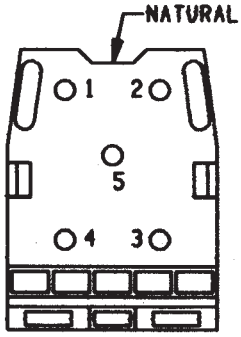

RIGHT REAR DOOR WINDOW SWITCH

C325

CAV	CIRCUIT	FUNCTION
1	Q12 14BR	RT RR P/W UP/DOWN CONTROL
2	Q28 14DG/WT	RT RR P/W UP/DOWN CONTROL
3	Q22 14VT	RT RR P/W UP/DOWN CONTROL
4	Q33 14BR/LB	RT RR P/W UP/DOWN CONTROL
5	Q1 14YL	POWER WINDOW MASTER SWITCH OUTPUT

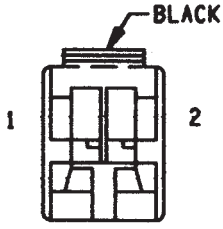

RIGHT REAR DOOR LOCK MOTOR

C326

CAV	CIRCUIT	FUNCTION
1	P2 18BK/WT	DOOR LOCK RELAY OUTPUT
2	P34 18PK/BK	DOOR UNLOCK DRIVER

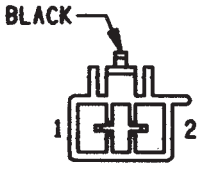

RIGHT REAR DOOR WINDOW MOTOR

C327

CAV	CIRCUIT	FUNCTION
1	Q12 14BR	RT RR P/W UP/DOWN CONTROL
2	Q22 14VT	RT RR P/W UP/DOWN CONTROL

C328

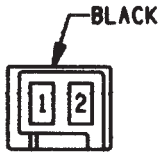

CAV	CIRCUIT
1	M2 20YL
2	Z1 20BK

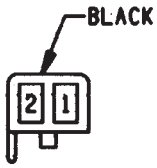

CAV	CIRCUIT
1	M2 20YL
2	Z1 20BK

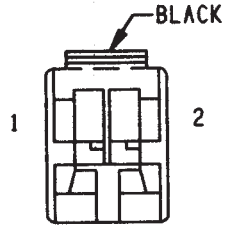

RIGHT FRONT DOOR LOCK MOTOR

C329

CAV	CIRCUIT	FUNCTION
1	P2 18BK/WT	DOOR LOCK RELAY OUTPUT
2	P34 18PK/BK	DOOR UNLOCK DRIVER

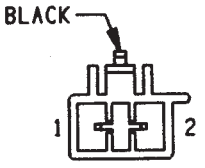

RIGHT FRONT DOOR WINDOW MOTOR

C331

CAV	CIRCUIT	FUNCTION
1	Q12 14BR	RT FT P/W UP/DOWN CONTROL
2	Q22 14VT	RT FT P/W UP/DOWN CONTROL

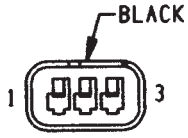

RIGHT POWER MIRROR

C332

CAV	CIRCUIT	FUNCTION
1	P79 20DB/LB	MIRROR GROUND
2	P77 20WT/BK	RIGHT/LEFT MOTOR—RIGHT
3	P78 20YL/LG	UP/DOWN MOTOR—RIGHT

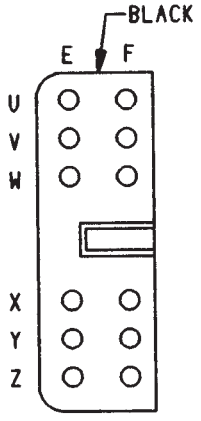

RIGHT FRONT DOOR LOCK SWITCH

C333

CAV	CIRCUIT	FUNCTION
UE	—	—
UF	—	—
VE	P35 140R/VT	DOOR LOCK SWITCH OUTPUT (LOCK)
VF	P36 14PK/VT	DOOR LOCK SWITCH OUTPUT (UNLOCK)
WE	—	—
WF	P38 140R/WT	DOOR LOCK RELAY CONTROL
XE	Q1 14YL	MASTER SWITCH OUTPUT
XF	Q26 14VT/WT	MASTER SWITCH—MOTOR DOWN
YE	Q12 14BR	RT FT P/W UP/DOWN CONTROL
YF	Q22 14VT	RT FT P/W UP/DOWN CONTROL
ZE	Q16 14BR/WT	MASTER SWITCH—MOTOR UP
ZF	—	—

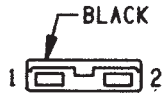

RIGHT FRONT DOOR SPEAKER

C334

CAV	CIRCUIT	FUNCTION
1	X54 20VT	RIGHT FRONT SPEAKER (+)
2	X56 20DB/RD	RIGHT FRONT SPEAKER (–)

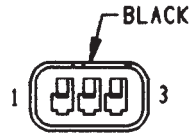

LEFT POWER MIRROR

C335

CAV	CIRCUIT	FUNCTION
1	P79 20DB/LB	GROUND
2	P81 20DB	RIGHT/LEFT MOTOR-LEFT
3	P80 20YL/BK	UP/DOWN MOTOR-LEFT

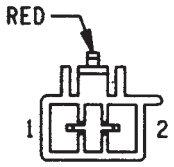

LEFT FRONT DOOR WINDOW MOTOR

C336

CAV	CIRCUIT	FUNCTION
1	Q11 14LB	LT FRONT P/W UP/DOWN CONTROL
2	Q21 14WT	LT FRONT P/W UP/DOWN CONTROL

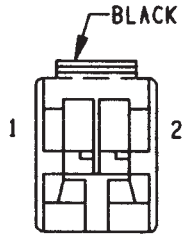

LEFT FRONT DOOR LOCK MOTOR

C338

CAV	CIRCUIT	FUNCTION
1	P2 18BK/WT	DOOR LOCK RELAY OUTPUT
2	P34 18PK/BK	DOOR UNLOCK DRIVER

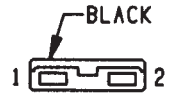

LEFT FRONT DOOR SPEAKER

C339

CAV	CIRCUIT	FUNCTION
1	X53 20DG	LEFT FRONT SPEAKER (+)
2	X55 20BR/RD	LEFT FRONT SPEAKER (–)

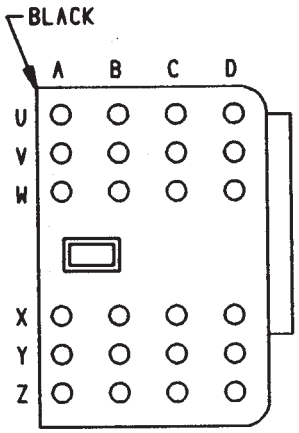

LEFT DOOR
LOCK/
WINDOW SWITCH

C340

CAV	CIRCUIT	FUNCTION
UA	—	—
UB	—	—
UC	—	—
UD	—	—
VA	P35 14OR/VT	DOOR LOCK SWITCH OUTPUT (LOCK)
VB	P36 14PK/VT	DOOR LOCK SWITCH OUTPUT (UNLOCK)
VC	Q11 14LB	LT FRONT P/W UP/DOWN CONTROL
VD	Q21 14WT	LT FRONT P/W UP/DOWN CONTROL
WA	—	—
WB	P38 14OR/WT	DOOR LOCK RELAY CONTROL
WC	—	—
WD	—	—
XA	—	—
XB	—	—
XC	—	—
XD	Z1 14PK	GROUND
YA	Q1 14YL	MASTER SWITCH FEED
YB	F81 12TN	FUSED IGNITION SWITCH OUTPUT
YC	Q17 14DB/WT	LEFT REAR P/W UP/DOWN CONTROL
YD	Q27 14RD/BK	LEFT REAR P/W UP/DOWN CONTROL
ZA	—	—
ZB	—	—
ZC	—	—
ZD	—	—

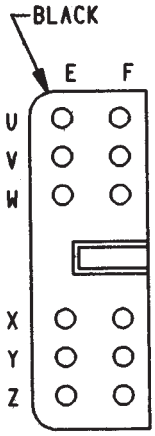

RIGHT
WINDOW SWITCH

C341

CAV	CIRCUIT	FUNCTION
UE	—	—
UF	—	—
VE	Q16 14BR/WT	POWER WINDOW MASTER SWITCH-MOTOR UP
VF	Q26 14VT/WT	POWER WINDOW MASTER SWITCH-MOTOR DOWN
WE	—	—
WF	—	—
XE	—	—
XF	—	—
YE	Q18 14GY/BK	RIGHT REAR P/W UP/DOWN CONTROL
YF	Q28 14DG/WT	RIGHT REAR P/W UP/DOWN CONTROL
ZE	—	—
ZF	—	—

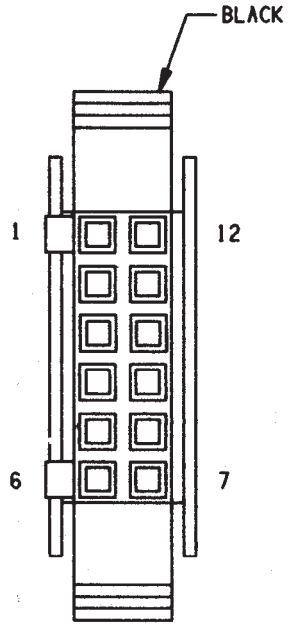

REMOTE KEYLESS ENTRY MODULE

C342

CAV	CIRCUIT	FUNCTION
1	M1 20PK	FUSED B(+)
2	G68 20PK/OR	OVERDRIVE OFF LAMP DRIVER
3	P35 20OR/VT	DOOR LOCK SWITCH OUTPUT (LOCK)
4	P36 20PK/VT	DOOR LOCK SWITCH OUTPUT (UNLOCK)
5	—	—
6	—	—
7	M2 20YL	COURTESY LAMP SWITCH OUTPUT
8	—	—
9	Z1 20BK	GROUND
10	—	—
11	F87 20WT/BK	FUSED IGNITION SWITCH OUTPUT
12	G72 20DG/OR	KEYLOCK SWITCH SENSE

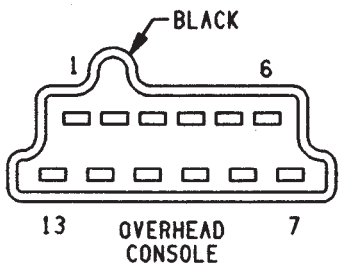

OVERHEAD CONSOLE

C343

CAV	CIRCUIT	FUNCTION
1	—	—
2	Z2 20BK/LG	GROUND
3	—	—
4	Z1 20BK	GROUND
5	M1 20PK	FUSED B(+)
6	M1 20PK	FUSED B(+)
7	F87 20WT/BK	FUSED IGNITION SWITCH OUTPUT
8	M2 20YL	COURTESY LAMP SWITCH OUTPUT
9	G31 20BK/LB	AMBIENT AIR TEMP SENSOR SIGNAL
10	G32 20VT/LG	SENSOR GROUND
11	—	—
12	L90 20DB/RD	PARK LAMP SWITCH OUTPUT
13	E2 20OR/BK	PANEL LAMPS DRIVER

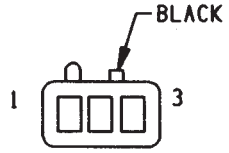

DOME/READING LAMPS

C344

CAV	CIRCUIT	FUNCTION
1	M1 20PK	FUSED B(+)
2	M2 20YL	COURTESY LAMP SWITCH OUTPUT
3	Z1 20BK	GROUND

C345

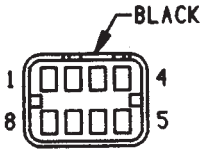

CAV	CIRCUIT
1	M4 20VT/YL
2	L50 18WT/TN
3	P2 18BK/WT
4	P34 18PK/BK
5	V13 18BR/RD
6	F20 18WT
7	V20 18BK/YL
8	L90 18DB/RD

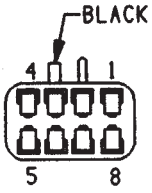

CAV	CIRCUIT
1	M4 20VT/YL
2	L50 18WT/TN
3	P2 18BK/WT
4	P34 18PK/BK
5	V13 18BR/RD
6	F20 18WT
7	V20 18BK/YL
8	L90 20DB/RD

C346

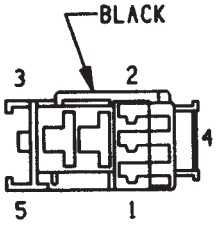

RIGHT TURN RELAY

CAV	CIRCUIT	FUNCTION
1	L60 18TN	RIGHT TURN SIGNAL
2	Z1 20BK	GROUND
3	L60 18TN	RIGHT TURN SIGNAL
4	95 18PK	STOP LAMP RELAY OUTPUT
5	94 18DG	STOP LAMP RELAY OUTPUT

C347

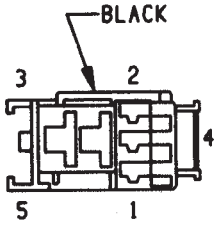

LEFT TURN RELAY

CAV	CIRCUIT	FUNCTION
1	L61 18LG	LEFT TURN SIGNAL
2	Z1 20BK	GROUND
3	L61 18LG	LEFT TURN SIGNAL
4	95 18PK	STOP LAMP RELAY OUTPUT
4	95 18PK	STOP LAMP RELAY OUTPUT
5	94 18DG	STOP LAMP RELAY OUTPUT
5	94 18DG	STOP LAMP RELAY OUTPUT

C348

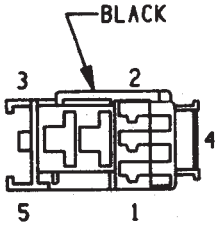

STOP LAMP RELAY

CAV	CIRCUIT	FUNCTION
1	L50 18WT/TN	STOP LAMP SWITCH OUTPUT
2	Z1 20BK	GROUND
3	A11 18RD/BK	GENERATOR OUTPUT
4	94 18DG	STOP LAMP RELAY OUTPUT
5	95 18PK	STOP LAMP RELAY OUTPUT

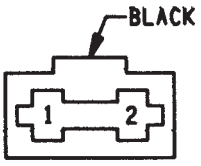

IN-INE CIRCUIT BREAKER

C349

CAV	CIRCUIT	FUNCTION
1	A11 14RD	GENERATOR OUTPUT
2	A11 18RD/BK	GENERATOR OUTPUT

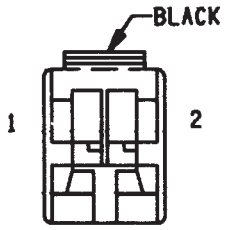

LIFTGATE LOCK MOTOR

C350

CAV	CIRCUIT	FUNCTION
1	P34 18PK/BK	DOOR UNLOCK DRIVER
2	P2 18BK/WT	DOOR LOCK RELAY OUTPUT

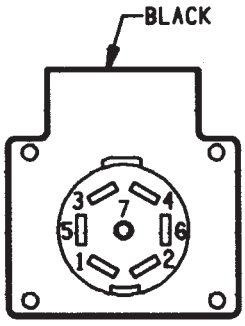

TRAILER TOW CONNECTOR

C351

CAV	CIRCUIT	FUNCTION
1	Z1 16BK	GROUND
2	96 14LB	ELECTRIC BRAKE FEED
3	L90 18DB/RD	PARK LAMP SWITCH OUTPUT
4	A11 14RD	GENERATOR OUTPUT
5	L61 18LG	LEFT TURN SIGNAL
6	L60 18TN	RIGHT TURN SIGNAL
7	L10 18BR/LG	BACK—UP LAMP SWITCH OUTPUT

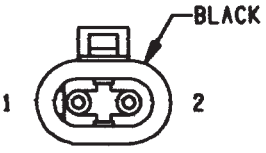

CAV	CIRCUIT
1	Z1 14BK
2	A11 14RD

C352

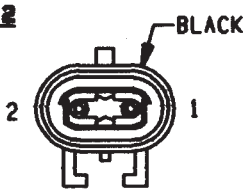

CAV	CIRCUIT
1	Z1 14BK
2	A11 14RD

C353



CAV	CIRCUIT
1	L50 18WT/TN
2	Z1 20BK

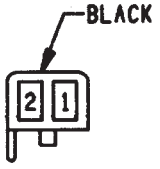

CAV	CIRCUIT
1	L50 18WT/TN
2	Z1 20BK

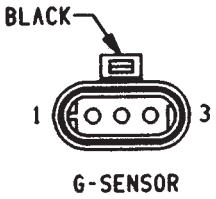

G-SENSOR

C354

CAV	CIRCUIT	FUNCTION
1	B516 18TN/WT	G-SENSOR #2 SENSE
2	B515 18YL/VT	G-SENSOR #1 SENSE
3	B517 18PK/OR	G-SENSOR GROUND

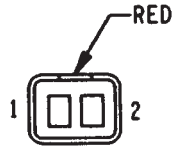

RIGHT REAR WHEEL SPEED SENSOR

C355

CAV	CIRCUIT	FUNCTION
1	B2 18YL	RIGHT REAR WHEEL SPEED SENSOR (+)
2	B1 18YL/DB	RIGHT REAR WHEEL SPEED SENSOR (−)

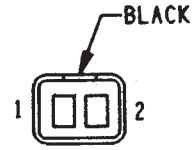

LEFT REAR WHEEL SPEED SENSOR

C356

CAV	CIRCUIT	FUNCTION
1	B3 18LG/DB	LEFT REAR WHEEL SPEED SENSOR (−)
2	B4 18LG	LEFT REAR WHEEL SPEED SENSOR (+)

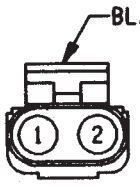

CAV	CIRCUIT
1	G107 18BK/RD
2	G106 18GY/YL

C357

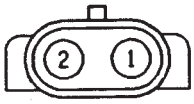

CAV	CIRCUIT
1	G107 20BK/RD
2	G106 20GY/YL

C358

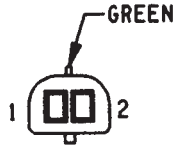

CAV	CIRCUIT
1	L90 20DB/RD
2	Z1 20BK



CAV	CIRCUIT
1	L90 20DB/RD
2	Z1 20BK

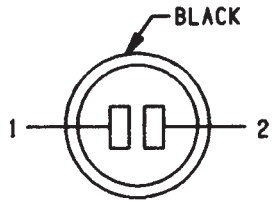

PARK/NEUTRAL POSITION SWITCH LAMP

C401

CAV	CIRCUIT	FUNCTION
1	E2 20OR	PANEL LAMPS DRIVER
2	Z1 20BK	GROUND

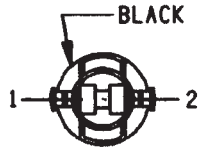

TRANSFER CASE LAMP

C402

CAV	CIRCUIT	FUNCTION
1	E2 20OR	PANEL LAMPS DRIVER
2	Z1 20BK	GROUND

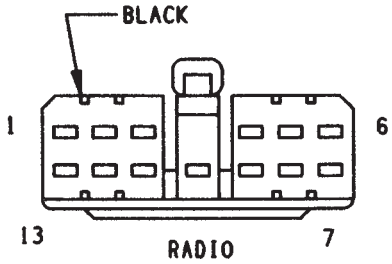

(4-SPEAKER SYSTEM ONLY)

C403

CAV	CIRCUIT	FUNCTION
1	X57 18BR	LEFT REAR SPEAKER (–)
2	X55 18BR	LEFT FRONT SPEAKER (–)
3	X5 18LB	RADIO DISPLAY OUTPUT
4	E2 18OR	PANEL LAMPS DRIVER
5	X56 18DB	RIGHT FRONT SPEAKER (–)
6	X58 18DB	RIGHT REAR SPEAKER (–)
7	X52 18VT	RIGHT REAR SPEAKER (+)
8	X54 18VT	RIGHT FRONT SPEAKER (+)
9	F85 18WT	FUSED IGNITION SWITCH OUTPUT
10	M1 18PK	FUSED B(+)
11	—	—
12	X53 18DG	LEFT FRONT SPEAKER (+)
13	X51 18DG	LEFT REAR SPEAKER (+)

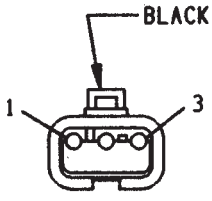

VEHICLE SPEED SENSOR

C404

CAV	CIRCUIT	FUNCTION
1	G7 18WT/OR	VEHICLE SPEED SENSOR SIGNAL
2	K4 18BK/LB	SENSOR GROUND
3	K7 18OR	8-VOLT SUPPLY

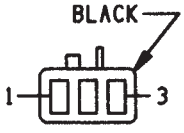

CARGO LAMP

C405

CAV	CIRCUIT	FUNCTION
1	M1 20PK	FUSED B (+)
2	M2 20YL	COURTESY LAMPS DRIVER
3	M4 20VT	CARGO LAMP OUTPUT
3	G71 20VT/YL	LIFTGATE LATCH SWITCH SENSE

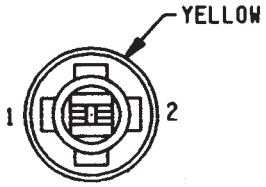

LICENSE LAMP

C406

CAV	CIRCUIT	FUNCTION
1	L90 20DB/RD	PARK LAMP SWITCH OUTPUT
2	Z1 20BK	GROUND

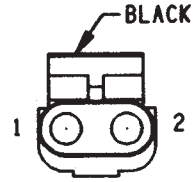

4WD SWITCH

C407

CAV	CIRCUIT	FUNCTION
1	G107 18BK/RD	4WD SWITCH OUTPUT
2	Z1 18GY	GROUND

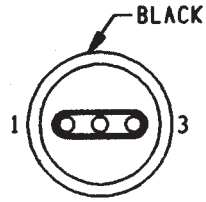

PARK/NEUTRAL POSITION SWITCH

C408

CAV	CIRCUIT	FUNCTION
1	F12 18DB/WT	FUSED IGNITION SWITCH OUTPUT
2	T41 18BR/YL	PARK/NEUTRAL POSITION SWITCH SENSOR
3	L10 18BR/LG	BACK-UP LAMP SENSE

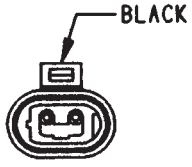

AMBIENT AIR TEMPERATURE SENSOR

C409

CAV	CIRCUIT	FUNCTION
1	G32 18BK/LB	SENSOR GROUND
2	G31 18VT/LG	AMBIENT AIR TEMPERATURE SENSOR SIGNAL

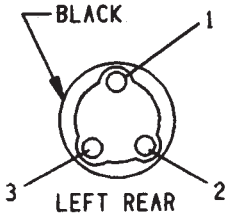

LEFT REAR DOOR JAMB SWITCH

C410

CAV	CIRCUIT	FUNCTION
1	—	—
2	M2 20YL	COURTESY LAMPS DRIVER
3	Z1 20BK	GROUND

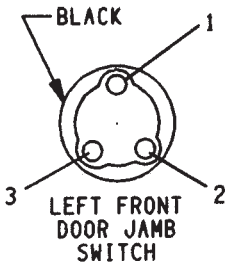

LEFT FRONT DOOR JAMB SWITCH

C411

CAV	CIRCUIT	FUNCTION
1	Z1 20BK	GROUND
2	G26 20LB	KEY-IN IGNITION SWITCH SENSE
3	M2 20YL	COURTESY LAMPS DRIVER

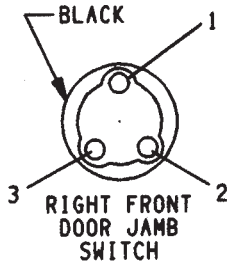

RIGHT FRONT DOOR JAMB SWITCH

C412

CAV	CIRCUIT	FUNCTION
1	Z1 20BK	GROUND
2	M2 20YL	COURTESY LAMPS DRIVER
3	—	—

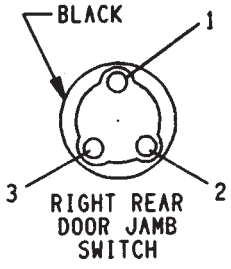

RIGHT REAR DOOR JAMB SWITCH

C413

CAV	CIRCUIT	FUNCTION
1	—	—
2	M2 20YL	COURTESY LAMPS DRIVER
3	Z1 20BK	GROUND

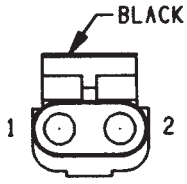

4WD INDICATOR LAMP

C414

CAV	CIRCUIT	FUNCTION
1	G107 18BK/RD	4WD SWITCH SENSE
2	G106 18GY/YL	4WD INDICATOR LAMP

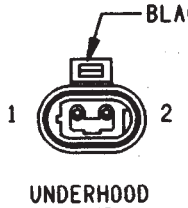

UNDERHOOD LAMP

C415

CAV	CIRCUIT	FUNCTION
1	A6 18RD/BK	FUSED B(+)
2	Z1 18BK	GROUND

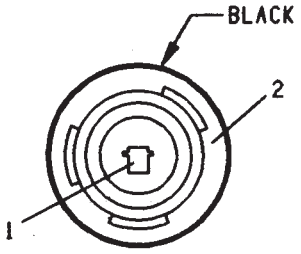

LEFT BACK-UP LAMP

C416

CAV	CIRCUIT	FUNCTION
1	L10 18BR/LG	BACK-UP LAMP SWITCH OUTPUT
2	Z1 18BK	GROUND

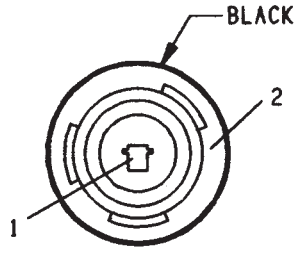

RIGHT BACK-UP LAMP

C417

CAV	CIRCUIT	FUNCTION
1	L10 18BR/LG	BACK-UP LAMP SWITCH OUTPUT
2	Z1 18BK	GROUND

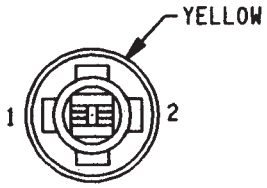

LEFT SIDE MARKER LAMP

C418

CAV	CIRCUIT	FUNCTION
1	L90 18DB/RD	PARK LAMP SWITCH OUTPUT
2	Z1 18BK	GROUND

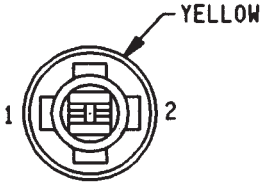

RIGHT SIDE MARKER LAMP

C419

CAV	CIRCUIT	FUNCTION
1	L90 18DB/RD	PARK LAMP SWITCH OUTPUT
2	Z1 18BK	GROUND

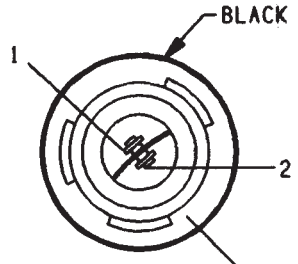

LEFT STOP/TAIL LAMP

C420

CAV	CIRCUIT	FUNCTION
1	L50 18WT/TN	STOP LAMP SWITCH OUTPUT
2	L90 18DB/RD	PARK LAMP SWITCH OUTPUT
3	Z1 18BK	GROUND

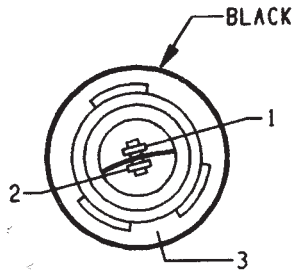

RIGHT STOP/TAIL LAMP

C421

CAV	CIRCUIT	FUNCTION
1	L50 18WT/TN	STOP LAMP SWITCH OUTPUT
2	L90 18DB/RD	PARK LAMP SWITCH OUTPUT
3	Z1 18BK	GROUND

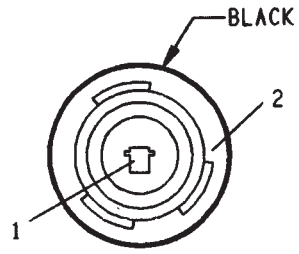

LEFT TURN LAMP

C422

CAV	CIRCUIT	FUNCTION
1	L61 18LG	LEFT TURN SIGNAL
2	Z1 18BK	GROUND

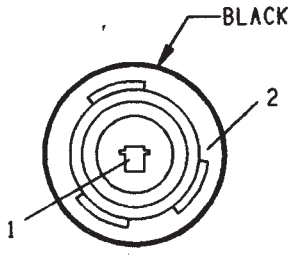

RIGHT TURN LAMP

C423

CAV	CIRCUIT	FUNCTION
1	L60 18TN	RIGHT TURN SIGNAL
2	Z1 18BK	GROUND

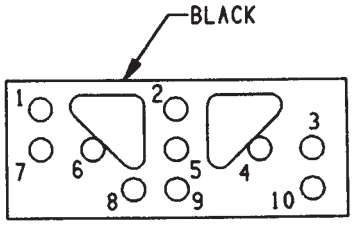

LEFT POWER SEAT SWITCH

C424

CAV	CIRCUIT	FUNCTION
1	—	—
2	S3 14TN	POWER SEAT SWITCH OUTPUT-FORWARD
3	S1 14YL	POWER SEAT SWITCH OUTPUT-RAISE REAR
4	S2 14LG	POWER SEAT SWITCH OUTPUT-LOWER REAR
5	Z1 14BK	GROUND
6	S5 140R	POWER SEAT SWITCH OUTPUT-RAISE FRONT
7	S6 14LB	POWER SEAT SWITCH OUTPUT-LOWER FRONT
8	A11 14RD	FUSED B(+)
9	S4 14WT	POWER SEAT SWITCH OUTPUT-REARWARD
10	—	—

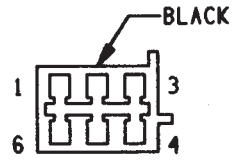

LEFT POWER SEAT MOTOR ASSEMBLY

C425

CAV	CIRCUIT	FUNCTION
1	S1 14YL	POWER SEAT SWITCH OUTPUT-RAISE REAR
2	S4 14WT	POWER SEAT SWITCH OUTPUT-REARWARD
3	S3 14TN	POWER SEAT SWITCH OUTPUT-FORWARD
4	S5 140R	POWER SEAT SWITCH OUTPUT-RAISE FRONT
5	S6 14LB	POWER SEAT SWITCH OUTPUT-LOWER FRONT
6	S2 14LG	POWER SEAT SWITCH OUTPUT-LOWER REAR

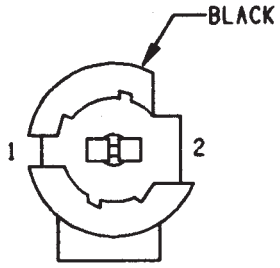

CENTER HIGH MOUNTED STOP LAMP 1

C426

CAV	CIRCUIT	FUNCTION
1	L50 18WT/TN	STOP LAMP SWITCH OUTPUT
2	Z1 20BK	GROUND

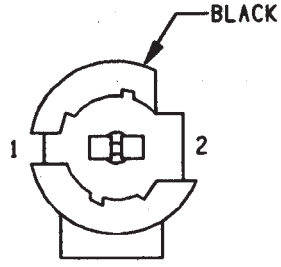

CENTER HIGH MOUNTED STOP LAMP 2

C427

CAV	CIRCUIT	FUNCTION
1	L50 18WT/TN	STOP LAMP SWITCH OUTPUT
1	L50 18WT/TN	STOP LAMP SWITCH OUTPUT
2	Z1 20BK	GROUND
2	Z1 20BK	GROUND

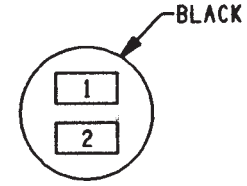

ASH RECEIVER LAMP

C428

CAV	CIRCUIT	FUNCTION
1	E2 200R/BK	PANEL LAMPS DRIVER
2	Z1 20BK	GROUND

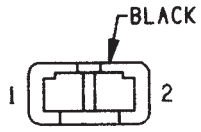

LEFT
LIFTGATE
SPEAKER

C429

CAV	CIRCUIT	FUNCTION
1	X51 20BR/YL	LEFT REAR SPEAKER (+)
2	X57 20BR/LB	LEFT REAR SPEAKER (—)

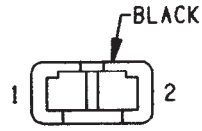

RIGHT
LIFTGATE
SPEAKER

C430

CAV	CIRCUIT	FUNCTION
1	X52 20DB/WT	RIGHT REAR SPEAKER (+)
2	X58 20DB/OR	RIGHT REAR SPEAKER (—)

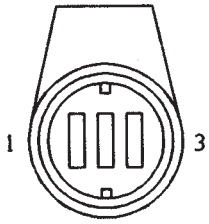

FUEL TANK
LEVEL GAUGE
SENDING UNIT

C431

CAV	CIRCUIT	FUNCTION
1	F9 140R	FUEL PUMP RELAY OUTPUT
2	—	—
3	57 16VT	FUEL LEVEL SENSOR SIGNAL

CONNECTOR LOCATIONS

GENERAL INFORMATION

This section provides illustrations identifying component and connector locations in the vehicle. A connector index is provided. Use the wiring diagrams in each section for connector number identification. Refer to the index for the proper figure number.

CONNECTOR LOCATIONS

Connector #	Color	Location	Fig.
C101	BK	Front of Left Fender Side Shield	1, 2
C102	BK	Bottom Right of Radiator Closure Panel	8
C103	BK	Near Left Side of Radiator	2, 8
C104	BK	Left Fender Side Shield	
C105	BK	Bottom of Left Fender Side Shield	2
C106	BK	Left Fender Side Shield, Near PCM	1, 2
C107	BK	On ABS Pump Motor	2
C108	BK	Right Rear Corner of Engine Compartment	2, 3
C109	BK	Center of Dash Panel	1, 4
C110	BK	Center of I.P., Below ABS Control Module	13, 14
C111	BK	Left of Steering Column	14
C112	BK	At ABS Control Module	13
C113	BK	In Harness, Near ABS Control Module	13
C114	BK	Center of I.P., Below ABS Control Module	14
C115	BK	Near ABS Control Module	14
C116	BK	Below ABS Control Module	14
C117	BK	Rear of Intake Manifold	6, 7
C118	BK	On Throttle Body	6, 7
C119	BK	Bottom Left Front of Cylinder Block	6, 7
C120	BK	On Throttle Body	6, 7
C121	GY	Rear of Intake Manifold	6, 7
C122	BK	At Thermostat Housing	6, 7
C123	BK	Injector No. 1	6, 7
C124	BK	Injector No. 2	6, 7
C125	BK	Injector No. 3	6, 7
C126	BK	Injector No. 4	6, 7
C127	BK	Injector No. 5	7
C128	BK	Injector No. 6	7
C129	GN	Center of Dash Panel	1, 4
C130	BK	Below Brake Master Cylinder	1, 2
C131	BK	Distributor	6, 7
C132	GN	Lower Right Side of I.P.	
C133	BK	Right of Blower Motor	4
C134	GY	Right of Blower Motor	4
C135	GY	Right of Blower Motor	4
C136	BR	On Washer Fluid Reservoir	1, 4
C137	BK	Under Side of Hood	1, 4
C138	BK	Left of Blower Motor	4
C139	BK	Bottom of Washer Fluid Reservoir	3, 4
C140	BK	Bottom of Washer Fluid Reservoir	3, 4
C141	BK	In Front of Washer Fluid Reservoir	1, 4
C142	BK	Between PDC and Blower Motor	1, 4
C143	BK	Bottom Front of Right Fender Side Shield	1, 3
C144	BK	Front of Right Fender Side Shield	1, 3
C145	BK	Front of Right Fender Side Shield	1, 3
C146	BK	Right Side of Grille Opening	1, 3
C147	BK	Below Distributor	7
C148	BK	Right Side of Engine	6, 7
C149	BK	Rear of Generator	5, 6
C150	BK	Right Rear of Engine	7
C151	BK	Right Fender Side Shield	1, 4
C152	GY	Behind Power Steering Pump	6
C153	BK	Right Side of Transmission	21
C154	BK	Left Side of Radiator Closure Panel	8
C155	BK	Left Rear of Radiator Closure Panel	8
C156	BK	Behind Lens	8
C157	BK	Behind Left Headlamp	8
C158	BK	Behind Lens	8
C159	BK	Center of Grille Opening	8
C160	BK	Behind Lens	8
C161	BK	Behind Right Headlamp	8
C162	BK	Behind Lens	8
C163	BK	Center of Grille Opening	8
C164	BK	Right Center of Engine Compartment	
C201	BK	Below Left Side of I.P.	9, 14
C202	LG	Behind Left Kick Panel	14
C203	BK	Behind Left Kick Panel	14
C204	GY	Behind Left Kick Panel	14
C205	BK	Bottom Right of I.P.	12
C206	BK	Bottom Right of I.P.	12
C207	BK	Behind Headlamp Switch	10
C208	BK	Bottom Right of I.P.	12
C209	BK	On I.P. Right of Steering Column	10
C210	BK	On I.P. Right of Steering Column	10
C211	BK	Rear of Radio	11
C212	BR	Center of I.P.	10
C213	BK	Center of I.P.	10
C214	GY	Right Side of I.P.	13
C215	BK	Right Side of I.P.	13
C216	GY	Glove Box	10
C217	BK	Bottom Right of I.P.	11
C218	RD	Right Side of I.P.	13, 17
C219	BK	Bottom Right of I.P.	11
C220	BK	Right Side of I.P.	13
C221	BK	Right Corner of I.P.	13
C222	LG	Right Corner of I.P.	13
C223	BK	Right Front of Steering Column	14
C224	BK	Right Front of Steering Column	14
C225	NAT	Below Steering Column	14

Connector #	Color	Location	Fig.
C226	BK	Left Kick Panel	
C227	BK	On I.P. Right of Steering Column	10
C228	BK	Left Side of Steering Column	14
C229	BK	Top of Brake Pedal Arm	13
C230	BK	Left Side of I.P.	12
C231	BK	Center of I.P.	10
C232	GY	Left Side of I.P.	12
C233	BK	Left Side of I.P.	12
C234	BK	Rear of I.P. Cluster	10
C235	NAT	Rear of I.P. Cluster	10
C236	BK	On I.P. Right of Steering Column	10
C237	BK	On I.P. Right of Steering Column	10
C238	BK	On I.P. Left of Steering Column	10
C239	RD	On I.P. Left of Steering Column	10
C240	BK	Left Front Door	17
C241	BK	Center of I.P.	
C242	BK	Center Bottom of I.P.	9, 11
C243	BK	Center Left of I.P.	
C301	DG	Behind Left Kick Panel	
C302	BK	Near Floor Console	
C303	BK	Bottom Right of Drivers Seat	15, 23
C304	BK	Bottom of Drivers Sear	15
C305	BK	Behind Right Kick Panel	17
C306	BK	Left B Pillar	18
C307	BK	Near Fuel Tank	15
C308	BK	In Liftgate	24
C309	BK	Under Rear of Roof Liner	20
C310	BK	Left Rear Quarter Panel	20
C311	BK	Left Rear Quarter Panel	20
C312	BK	Left Rear Quarter Panel	20
C313	BK	In Liftgate	24
C314	NAT	In Left Rear Door	18
C315	BK	In Left Rear Door	18
C316	RD	In Left Rear Door	18
C317	BK	Behind Left Kick Panel	15, 17
C318	RD	Behind Left Kick Panel	15, 17
C319	BK	Under Floor Console	15
C320	GY	Under Right Rear Seat	18
C321	BK	Behind Right Kick Panel	17
C322	DG	At Dome Lamp	
C323	BK	In Liftgate	24
C324	BK	Right Rear Quarter Panel	20
C325	NAT	In Right Rear Door	18
C326	BK	In Right Rear Door	18
C327	BK	In Right Rear Door	18
C328	BK	In Right B Pillar	18
C329	BK	In Right Front Door	17
C331	BK	In Right Front Door	17
C332	BK	In Right Front Door	17
C333	BK	In Right Front Door	17
C334	BK	In Right Front Door	17
C335	BK	In Left Front Door	17
C336	BK	In Left Front Door	17
C338	BK	In Left Front Door	17
C339	BK	In Left Front Door	17
C340	BK	In Left Front Door	17
C341	BK	In Left Front Door	17
C342	BK	Front Center of Roof Liner	16
C343	BK	Behind Overhead Console	16
C344	BK	Behind Doom Lamp	16
C345	BK	In left Rear Corner of Vehicle	20
C346	BK	Left Rear Quarter Panel	20
C347	BK	Left Rear Quarter Panel	20
C348	BK	Left Rear Quarter Panel	20
C349	BK	Left Rear Quarter Panel	20
C350	BK	In Liftgate	24
C351	BK	Left Rear Quarter Panel	22
C352	BK	Floor Pan, Near Drivers Seat	
C353	BK	In Liftgate	25
C354	BK	Below Left Rear Seat	19
C355	RD	Below Left Rear Seat	19
C356	BK	Below Left Rear Seat	19
C357	BK	On Transmission	21
C358	GN	In Liftgate	24
C401	BK	Behind PRNDL	15
C402	BK	In Floor Console	
C403	BK	Rear of Radio	11
C404	BK	Rear of Transmission (2WD)	21
C404	BK	Rear of Transfer Case (4WD)	21
C405	BK	Behind Cargo Lamp	20
C406	YL	In Liftgate	24
C407	BK	On Transfer Case	21
C408	BK	Side of Transmission	
C409	BK	Right of Radiator	1, 3
C410	BK	In Left Rear Door	
C411	BK	In Left Front Door	
C412	BK	In Right Door	
C413	BK	In Right Rear Door	
C414	BK	On Transfer Case	21
C415	BK	Near Underhood Lamp	
C416	BK	Behind Lens	
C417	BK	Behind Lens	
C418	YL	Behind Lens	
C419	YL	Behind Lens	
C420	BK	Behind Lens	
C421	BK	Behind Lens	
C422	BK	Behind Lens	
C423	BK	Behind Lens	
C424	BK	Side of Drivers Seat	23
C425	BK	Below Drivers Seat	23
C426	BK	Behind Lens	25
C427	BK	Behind Lens	25
C428	BK	At Ash Receiver	12
C429	BK	In Liftgate	24
C430	BK	In Liftgate	24
G101		Near Battery	5
G102		Near Battery	5
G103		Right Front Side of Engine, Behind Generator	5
G104		Left Fender Side Shield, Behind PCM	1, 2
G105		Left Fender Side Shield, Behind PCM	1, 2
G106		Right Rear of Engine	6, 7
G107		Right Rear of Engine	6, 7

Connector #	Color	Location	Fig.
G108		Right Rear of Engine	6, 7
G109		Right Front Side of Engine, Behind Generator	5
G201		Below Headlamp Switch	9
G301		Left Rear Quarter Panel	20

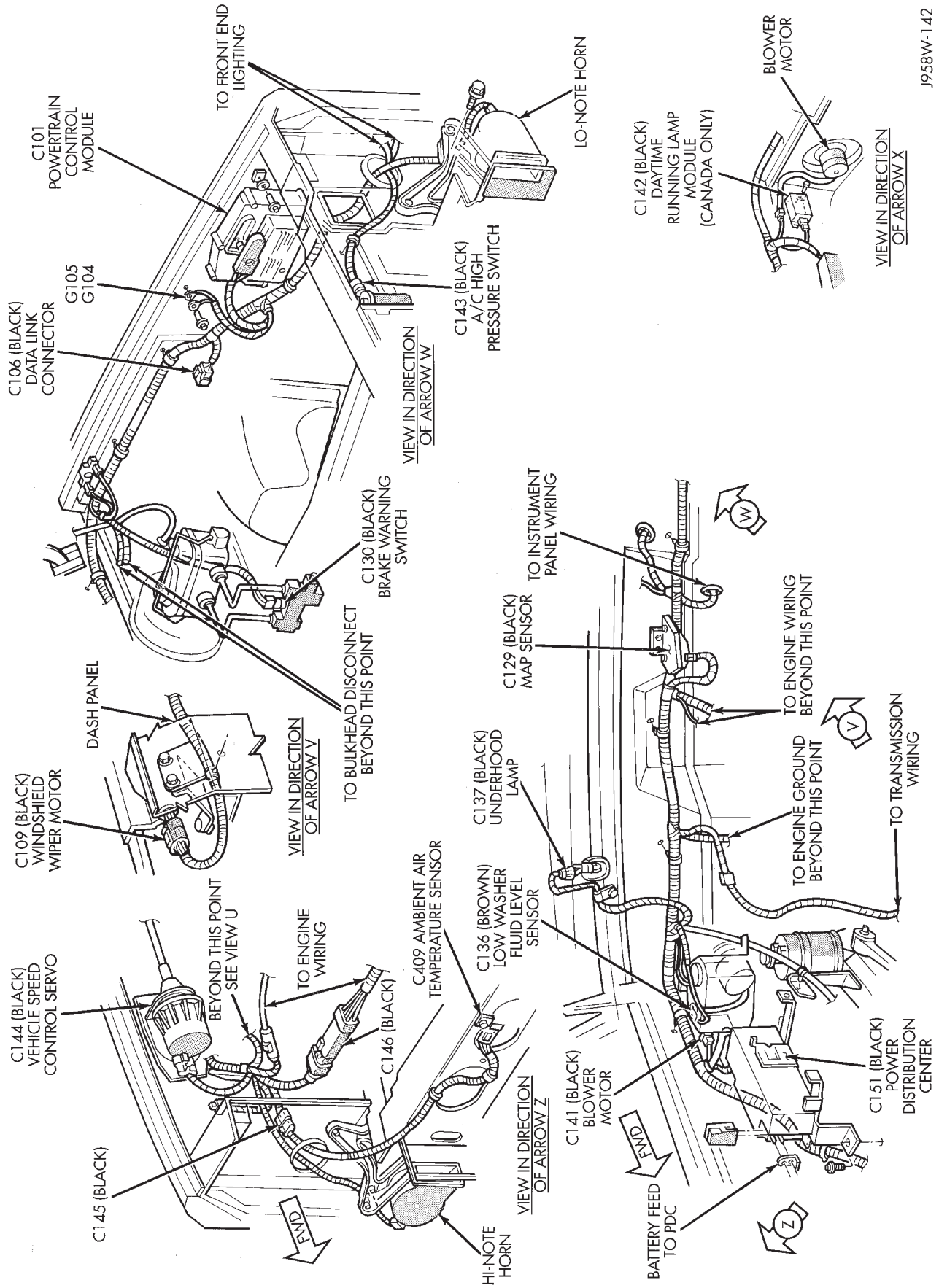

Fig. 1 Engine Compartment Wiring Connectors—2.5L

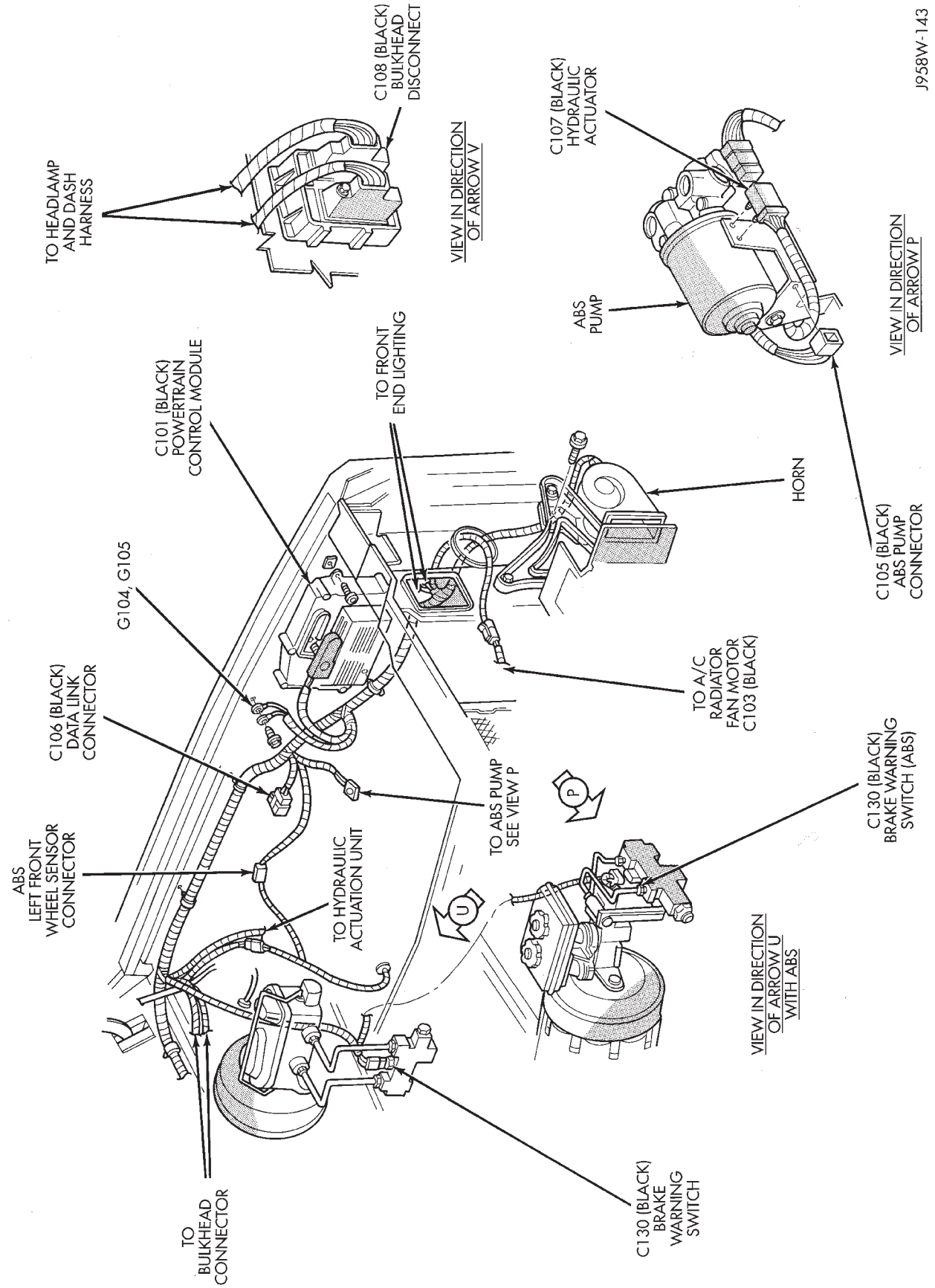

Fig. 2 Engine Compartment Wiring Connectors—4.0L

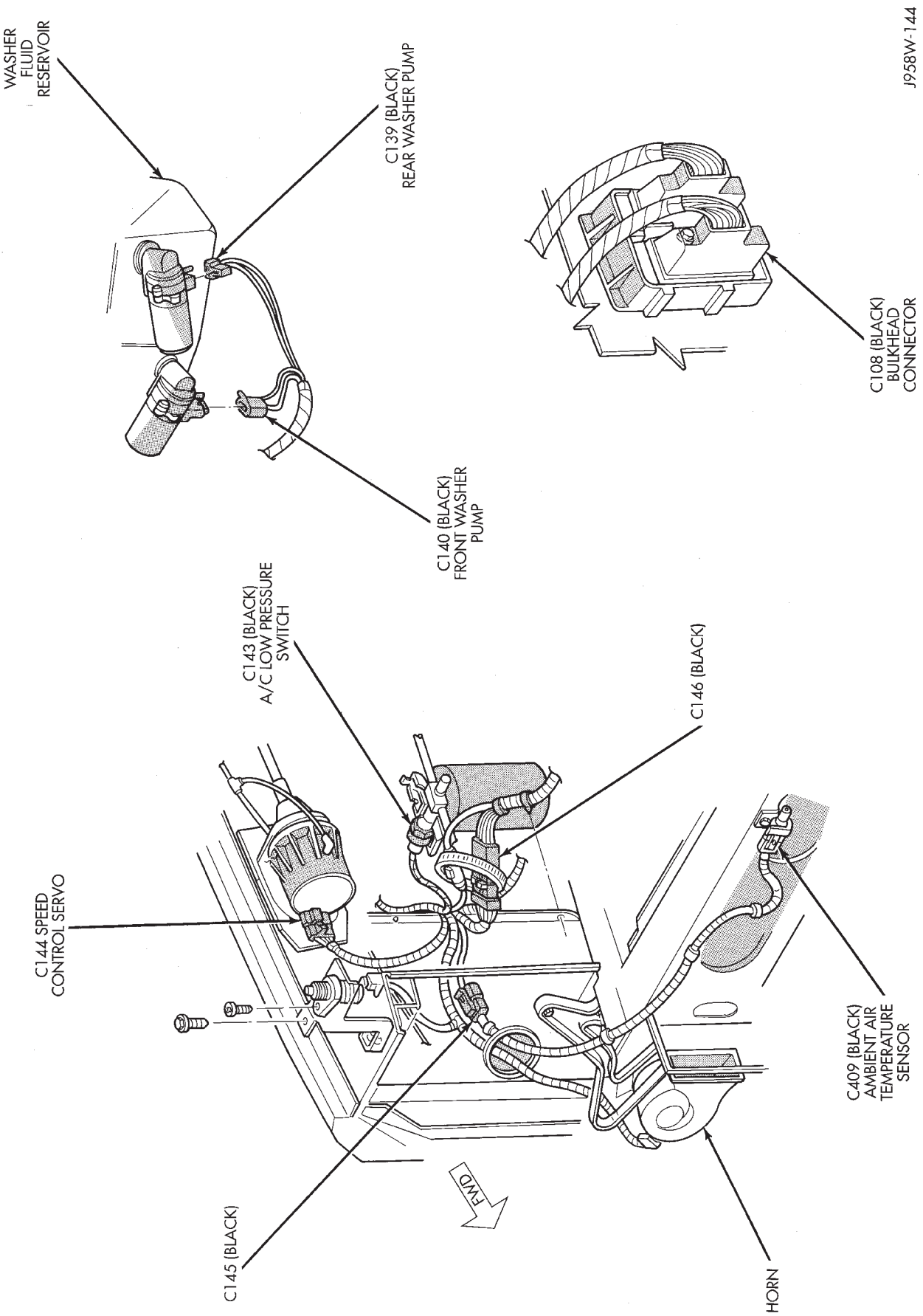

Fig. 3 Engine Compartment Wiring Connectors

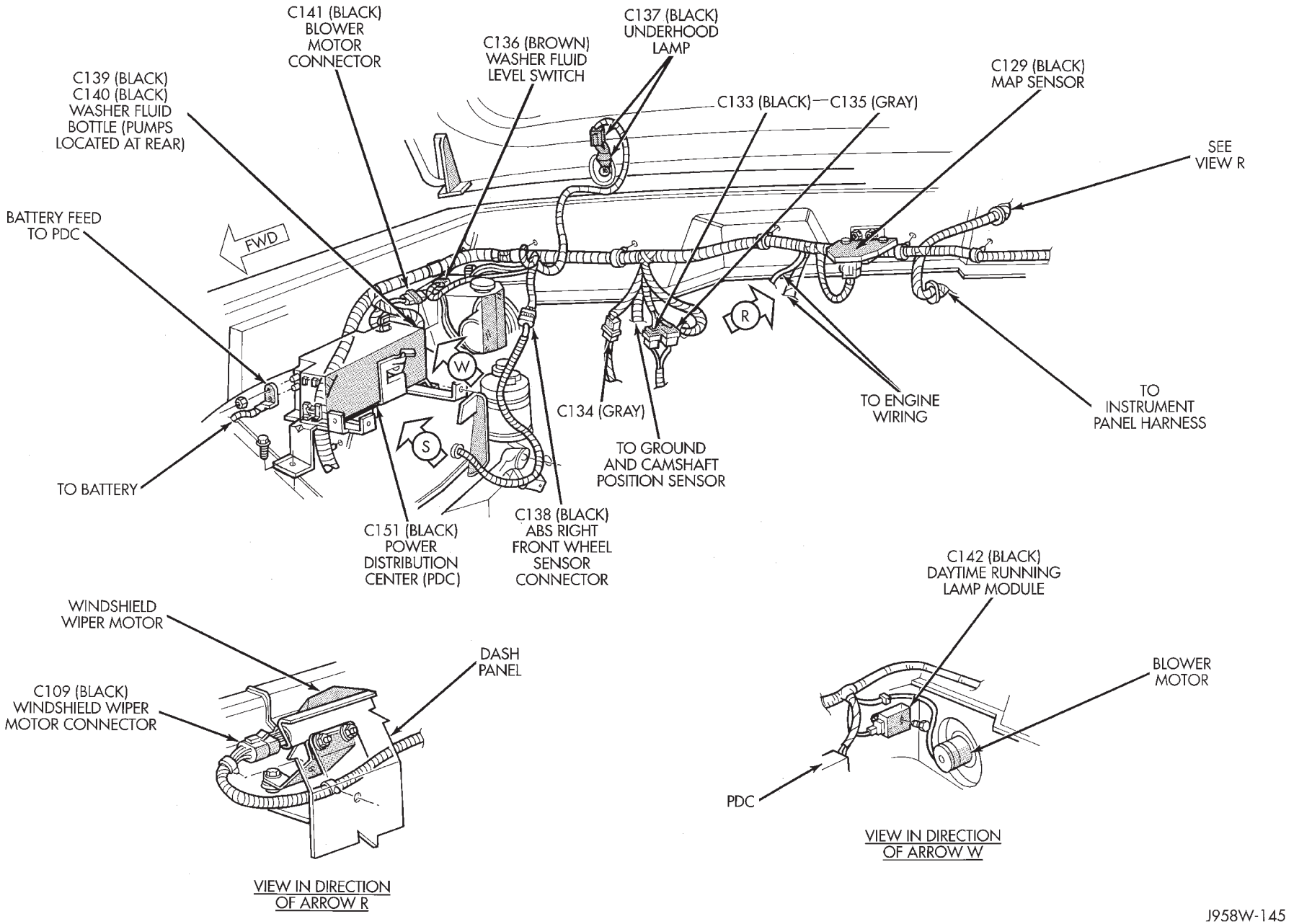

Fig. 4 Engine Compartment Wiring Connectors—Right Side, 4.0L

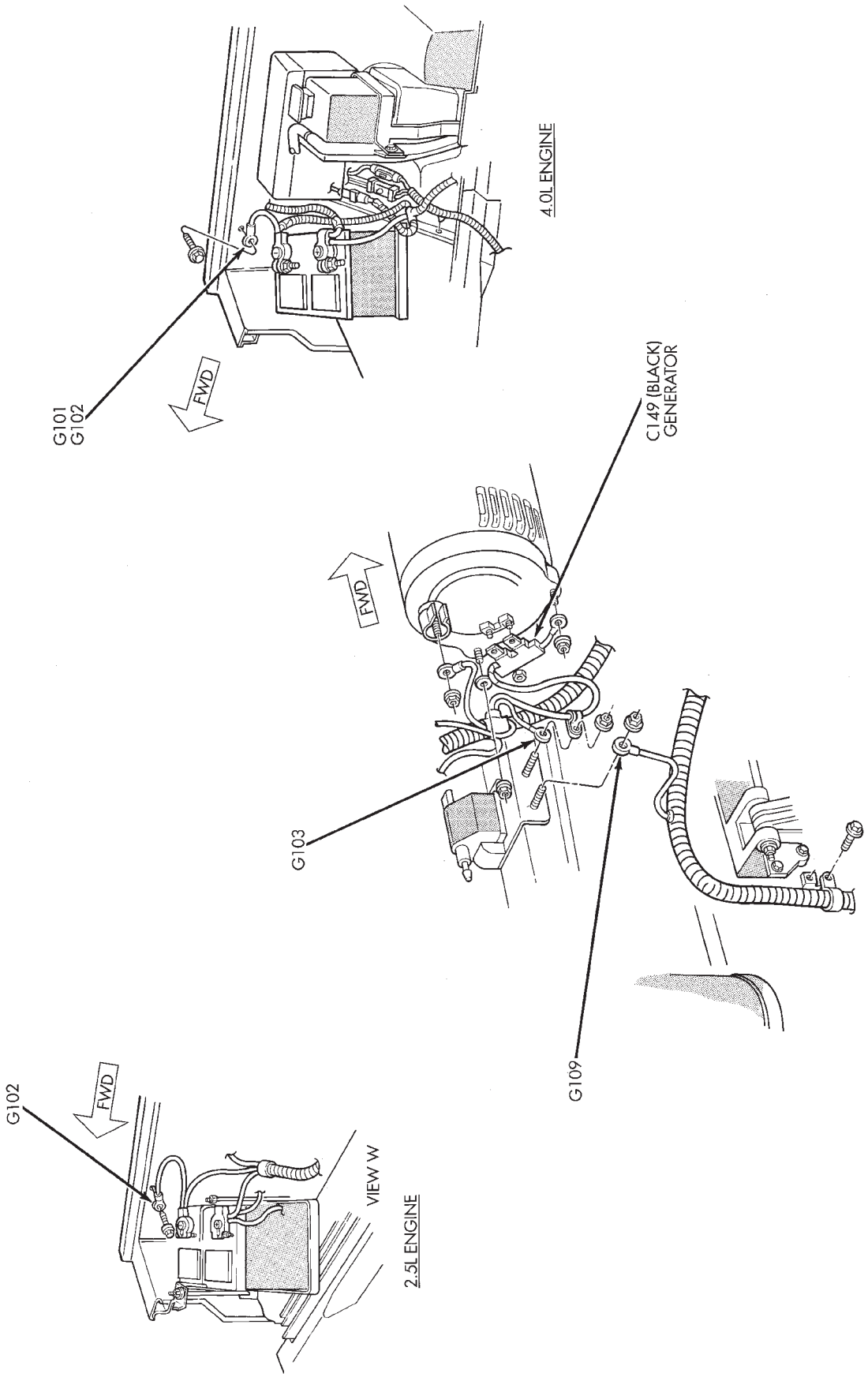

Fig. 5 Battery and Generator Wiring

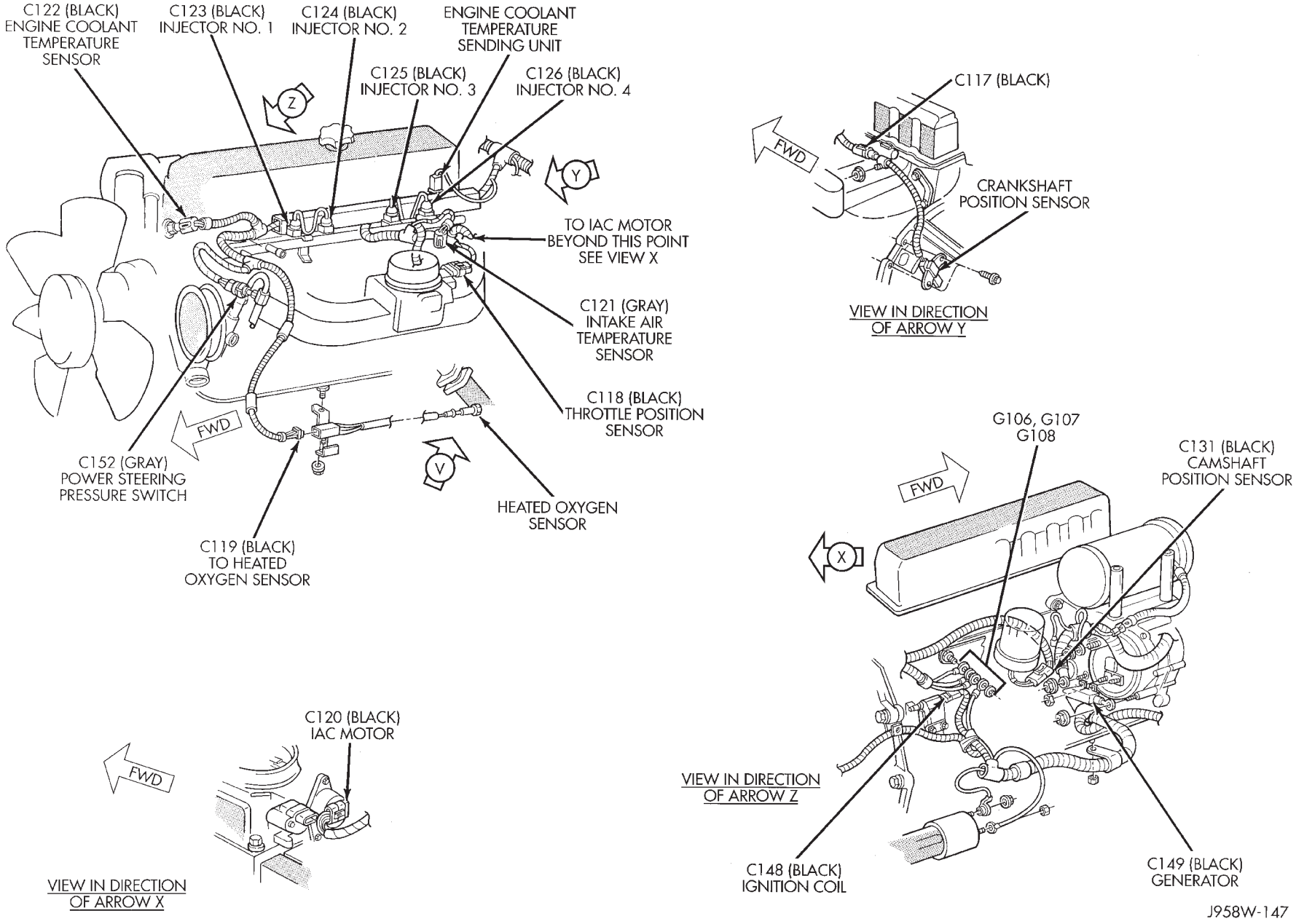

Fig. 6 Engine Wiring Connectors—2.5L Engine

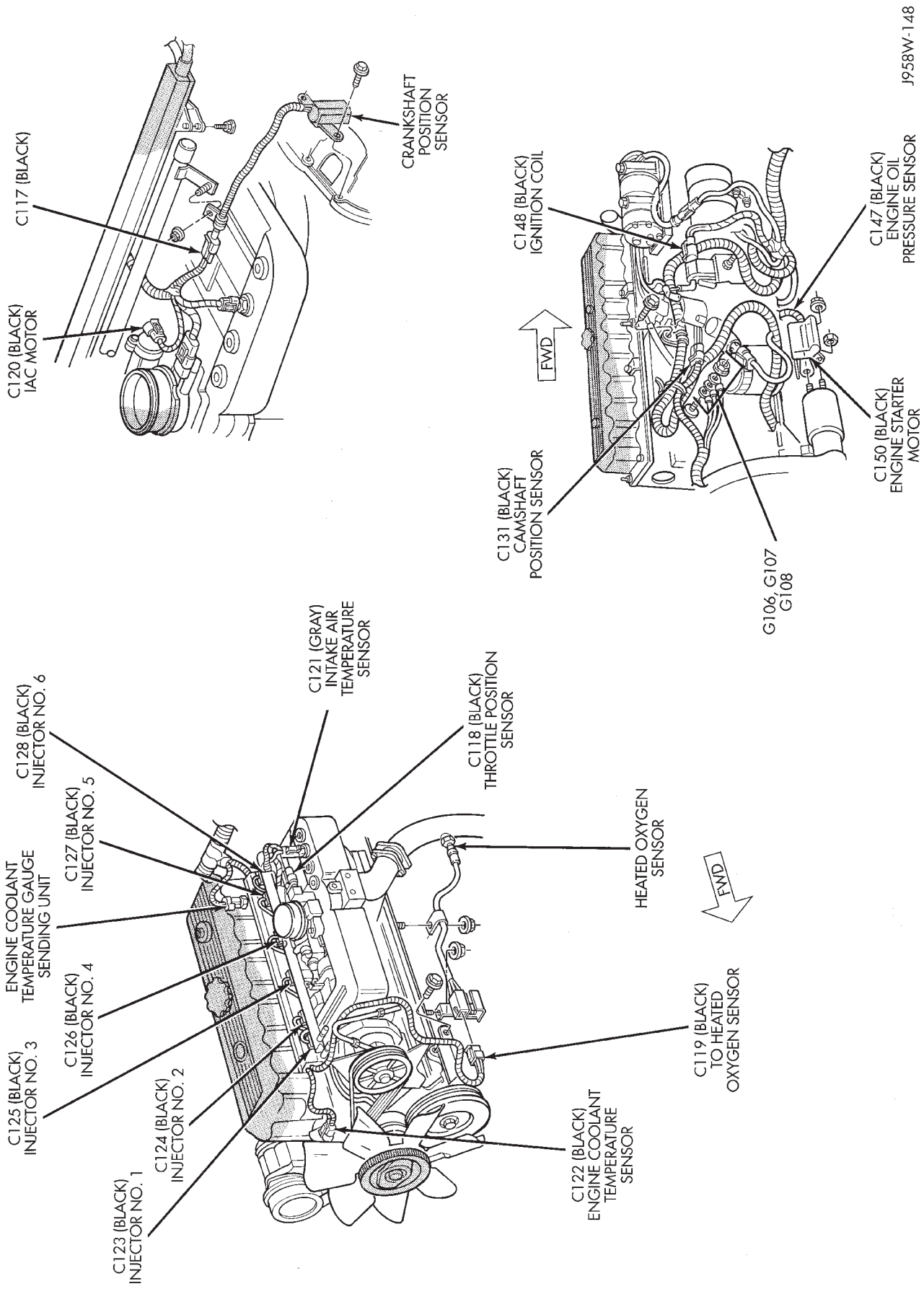

Fig. 7 Engine Wiring Connectors—4.0L Engine

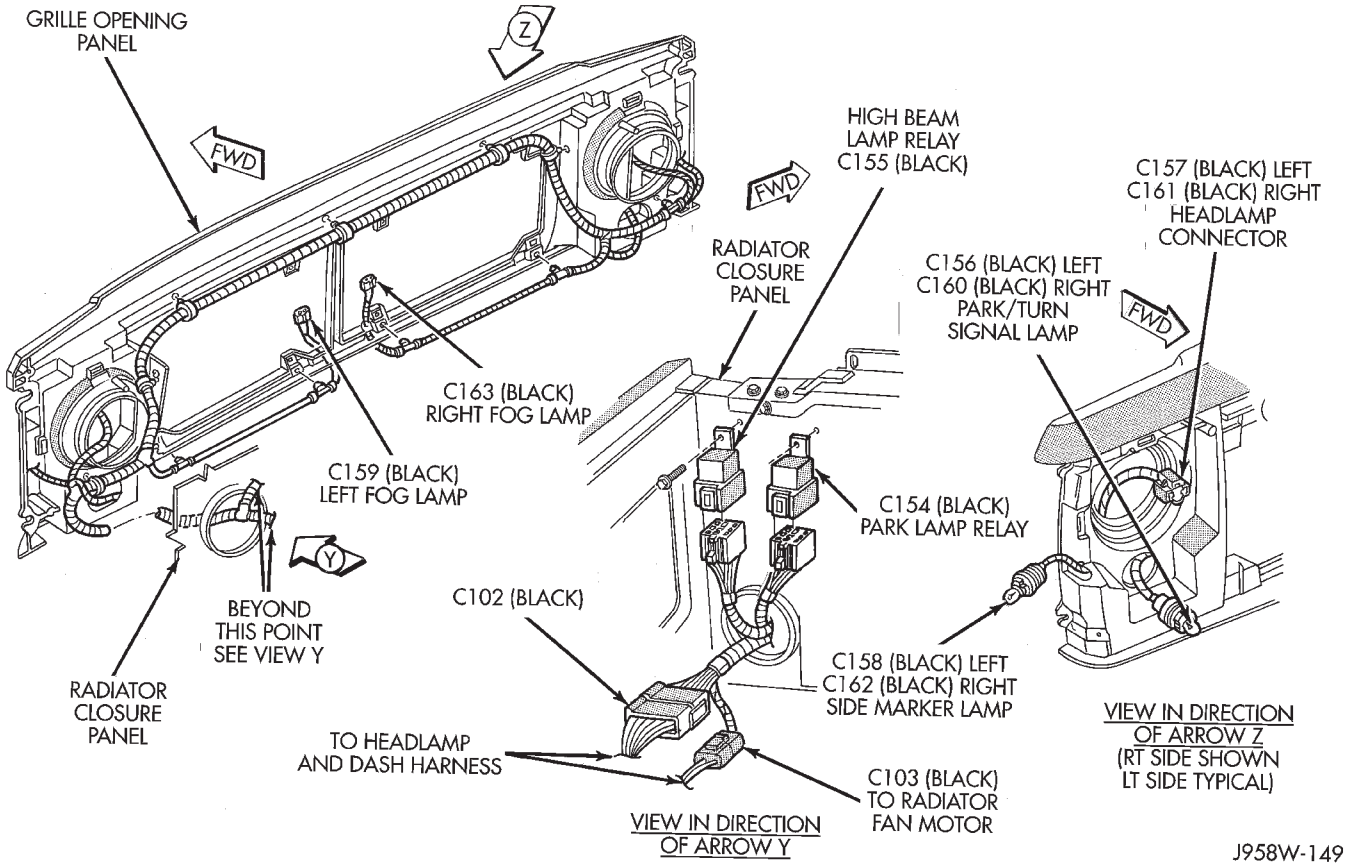

Fig. 8 Front End Lighting Wiring Connectors

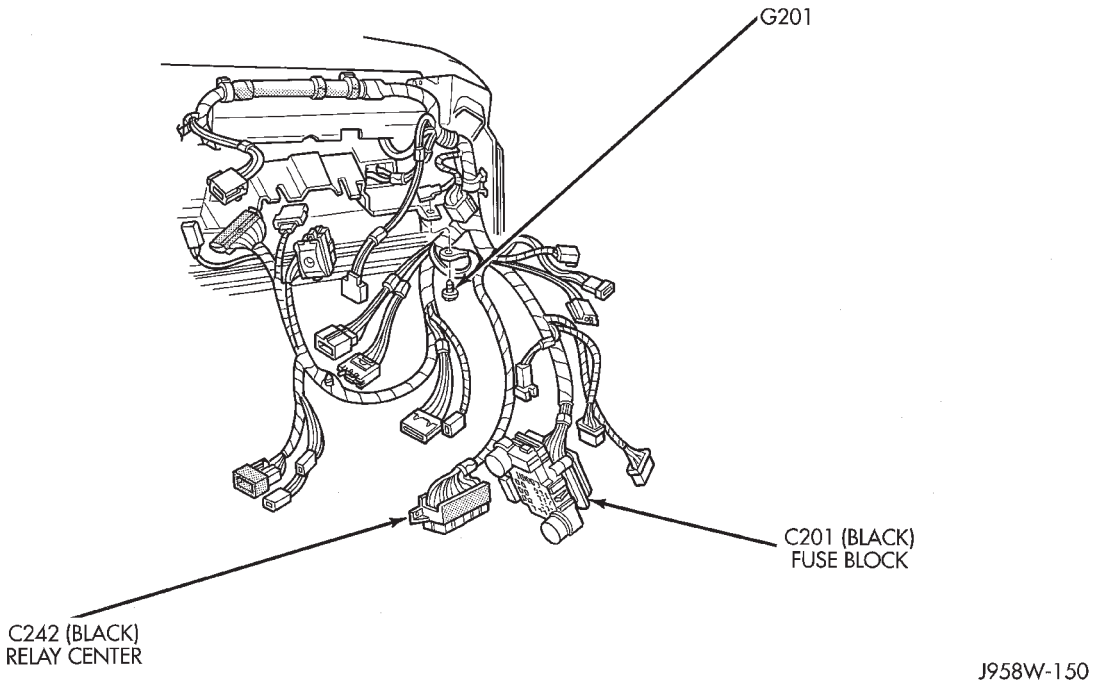

Fig. 9 Instrument Panel Ground

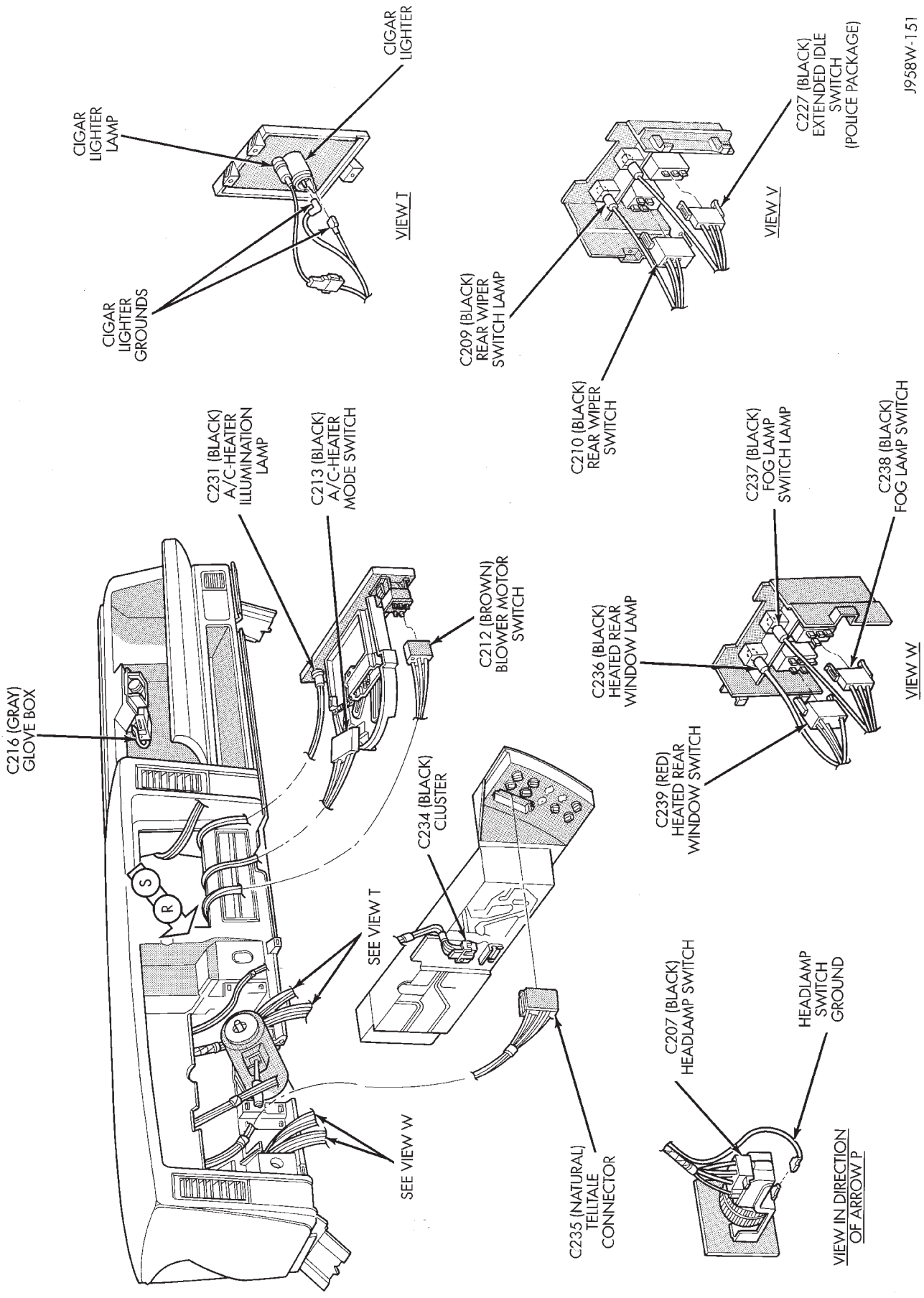

Fig. 10 Instrument Panel Wiring Connectors—Left Side

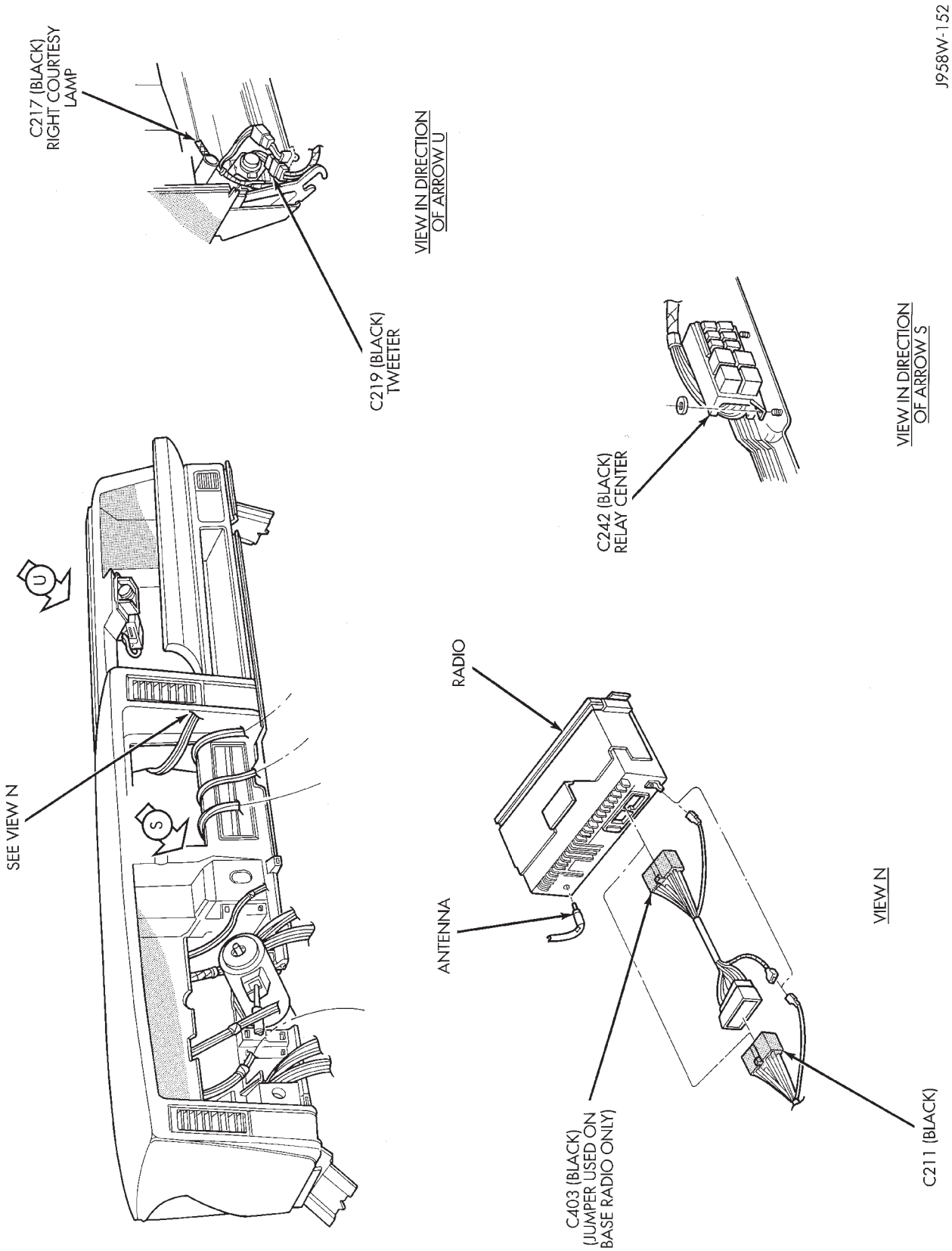

Fig. 11 Instrument Panel Wiring Connectors—Center

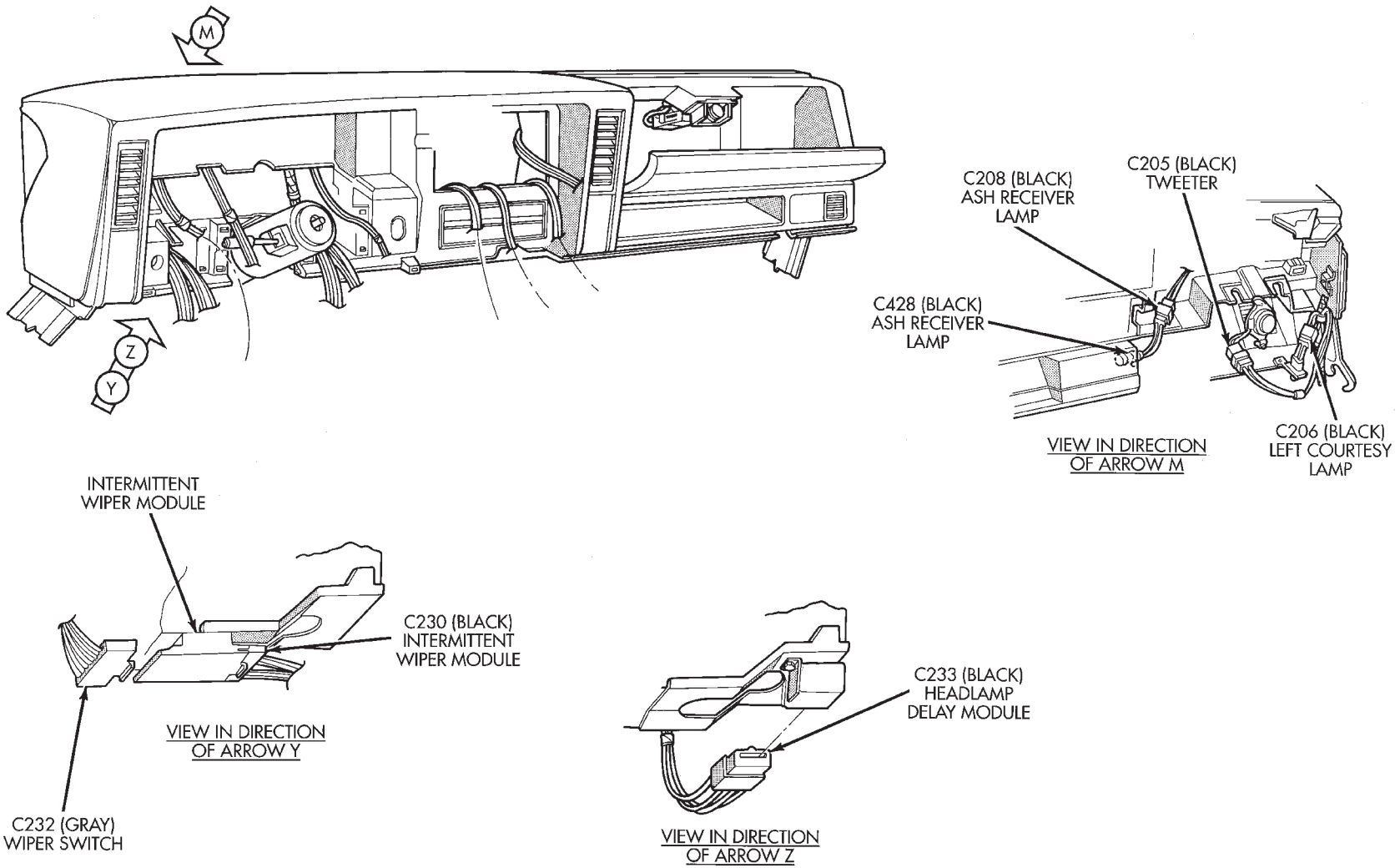

Fig. 12 Instrument Panel Wiring Connectors

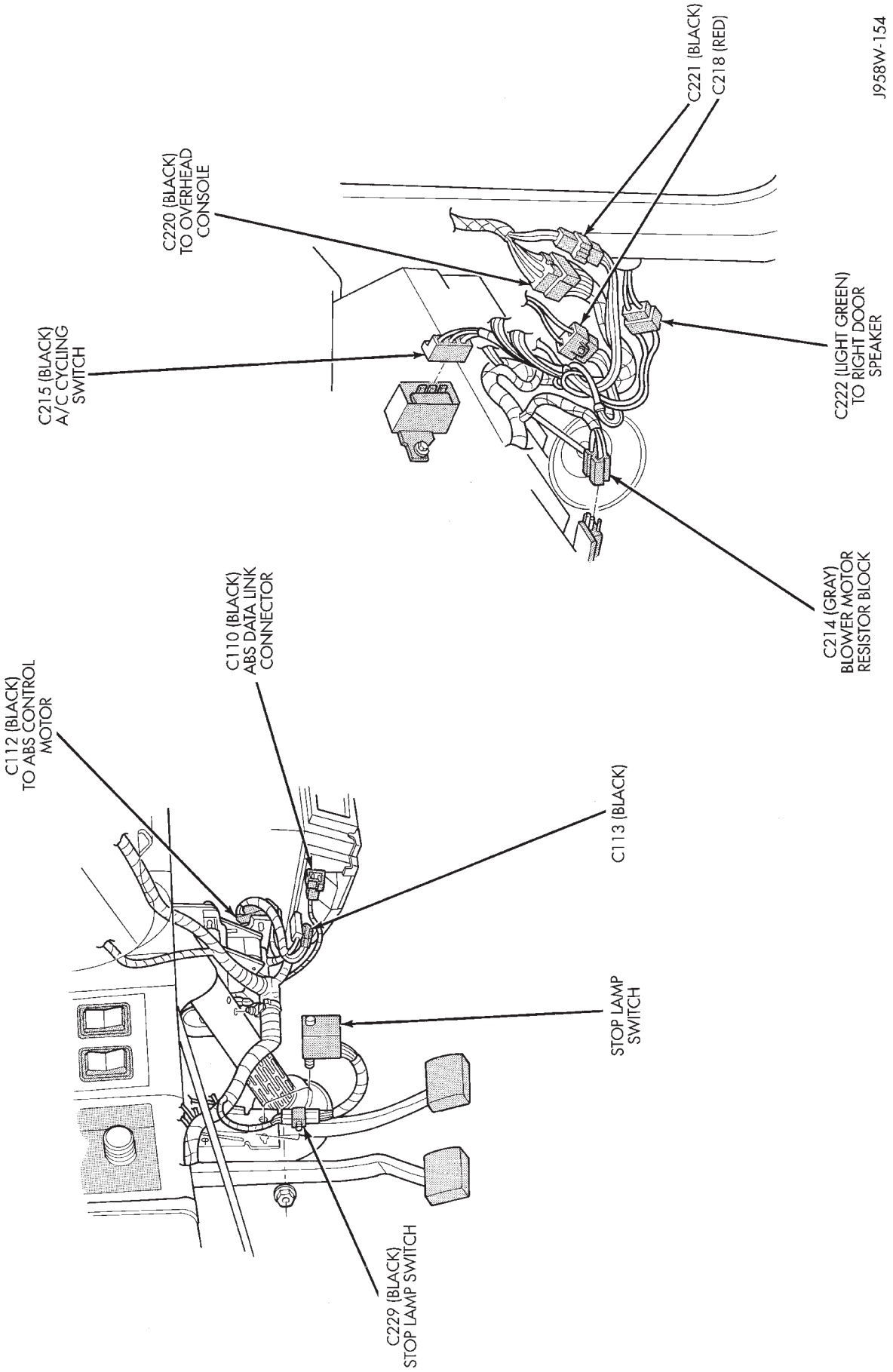

Fig. 13 Stop Lamp Switch, Blower Motor and ABS Control Module Wiring Connectors

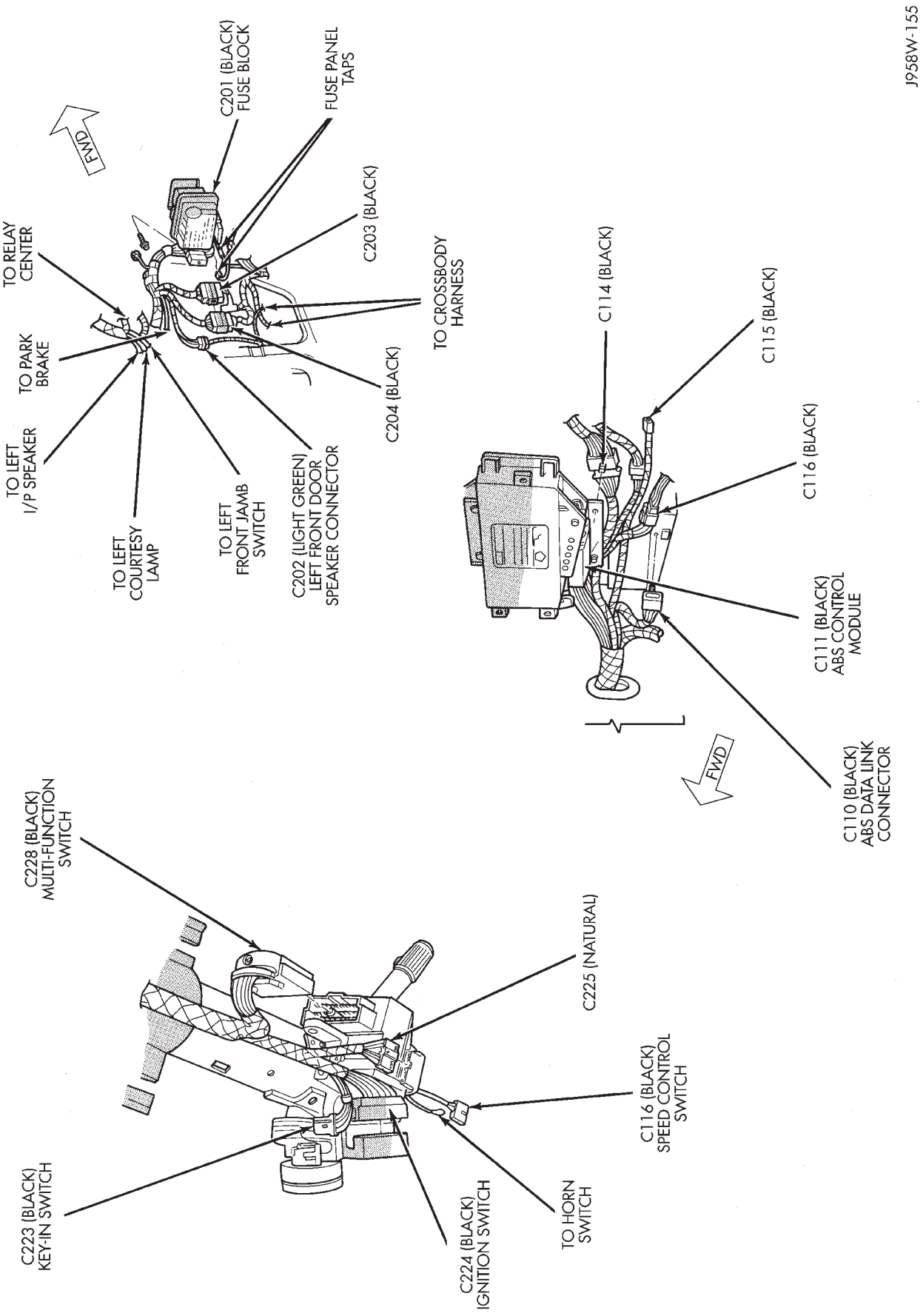

Fig. 14 Steering Column, Fuse Panel and ABS Control Module Wiring Connectors

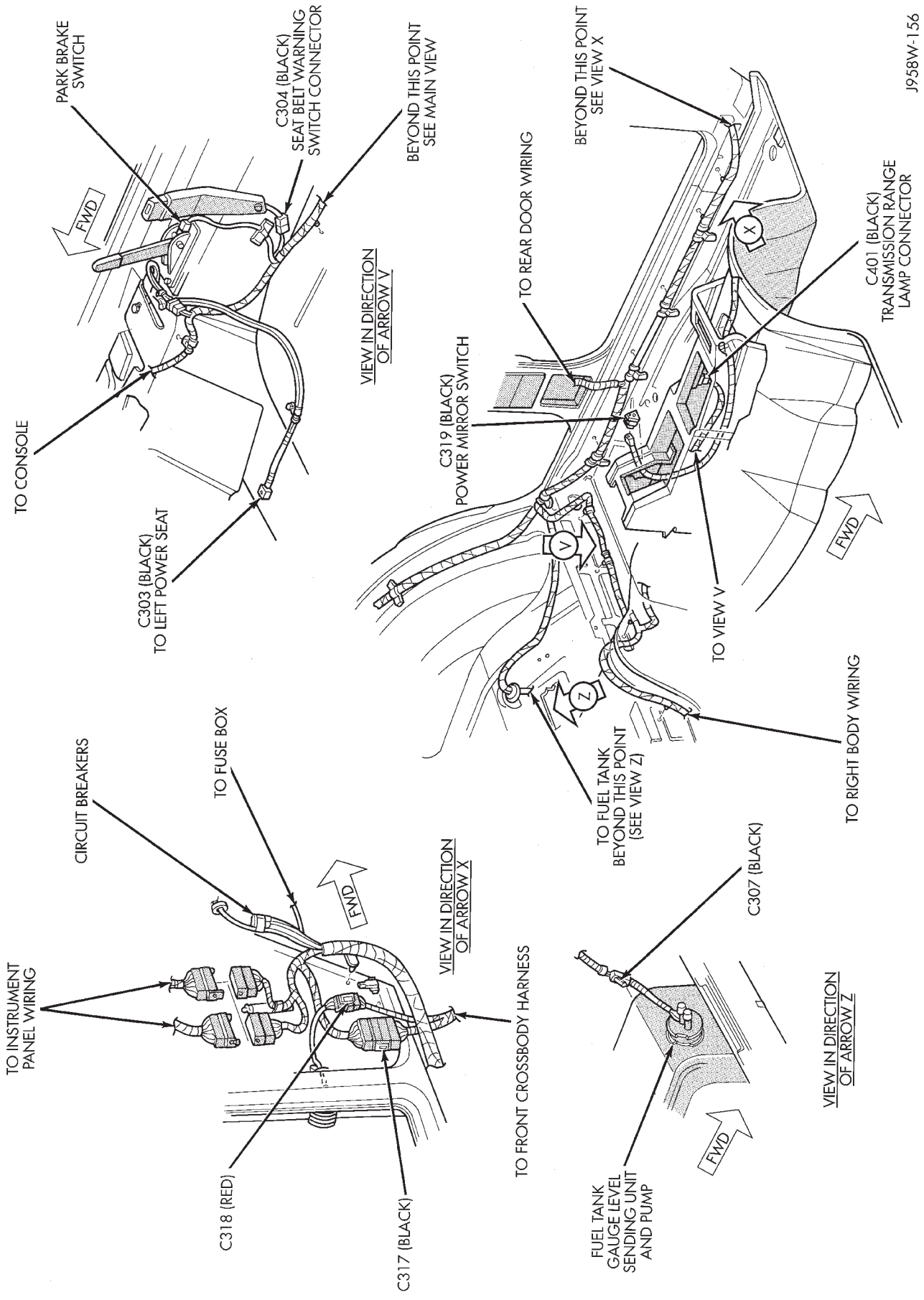

Fig. 15 Body Wiring Connectors

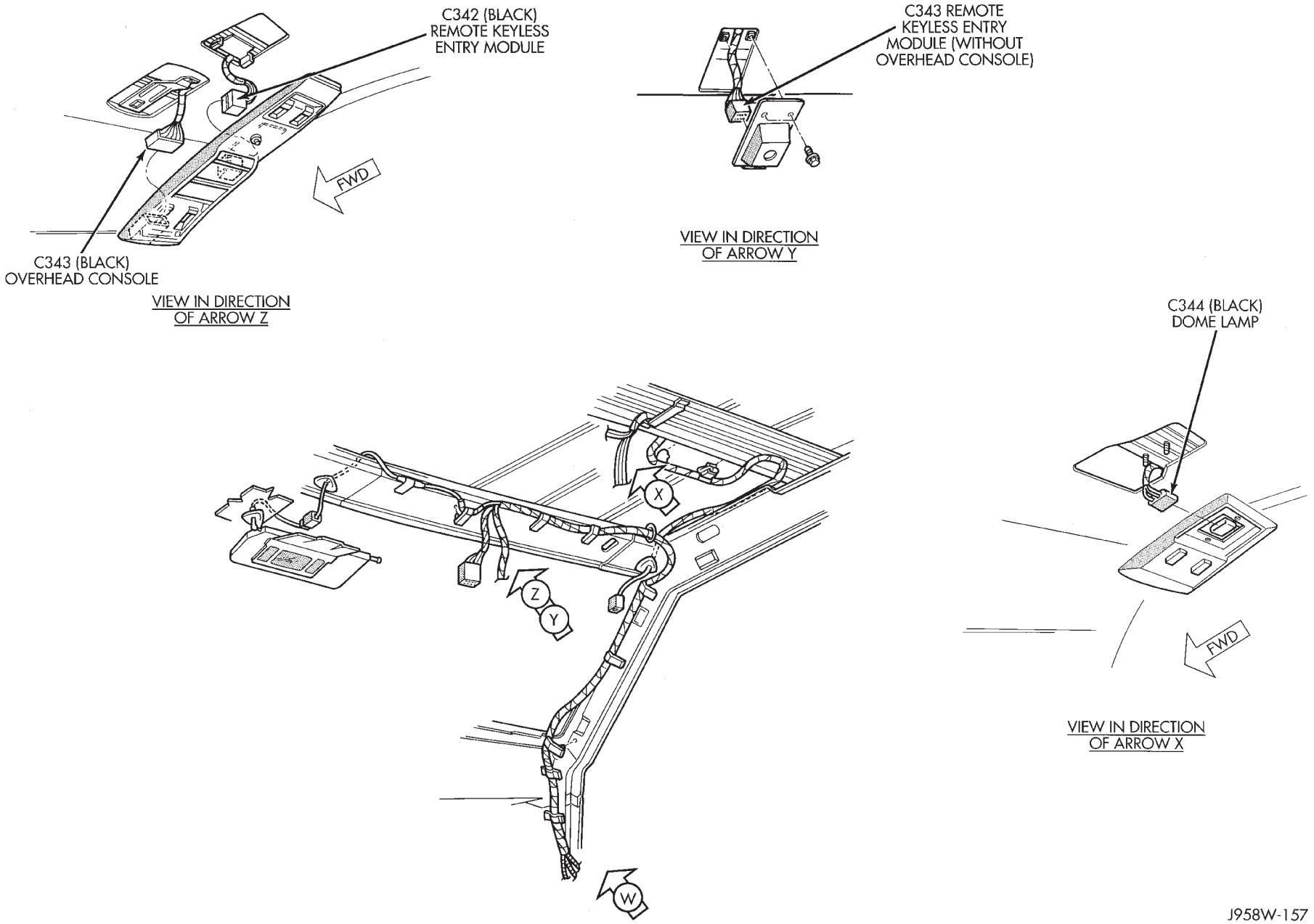

Fig. 16 Dome Lamp and Overhead Console Wiring Connectors

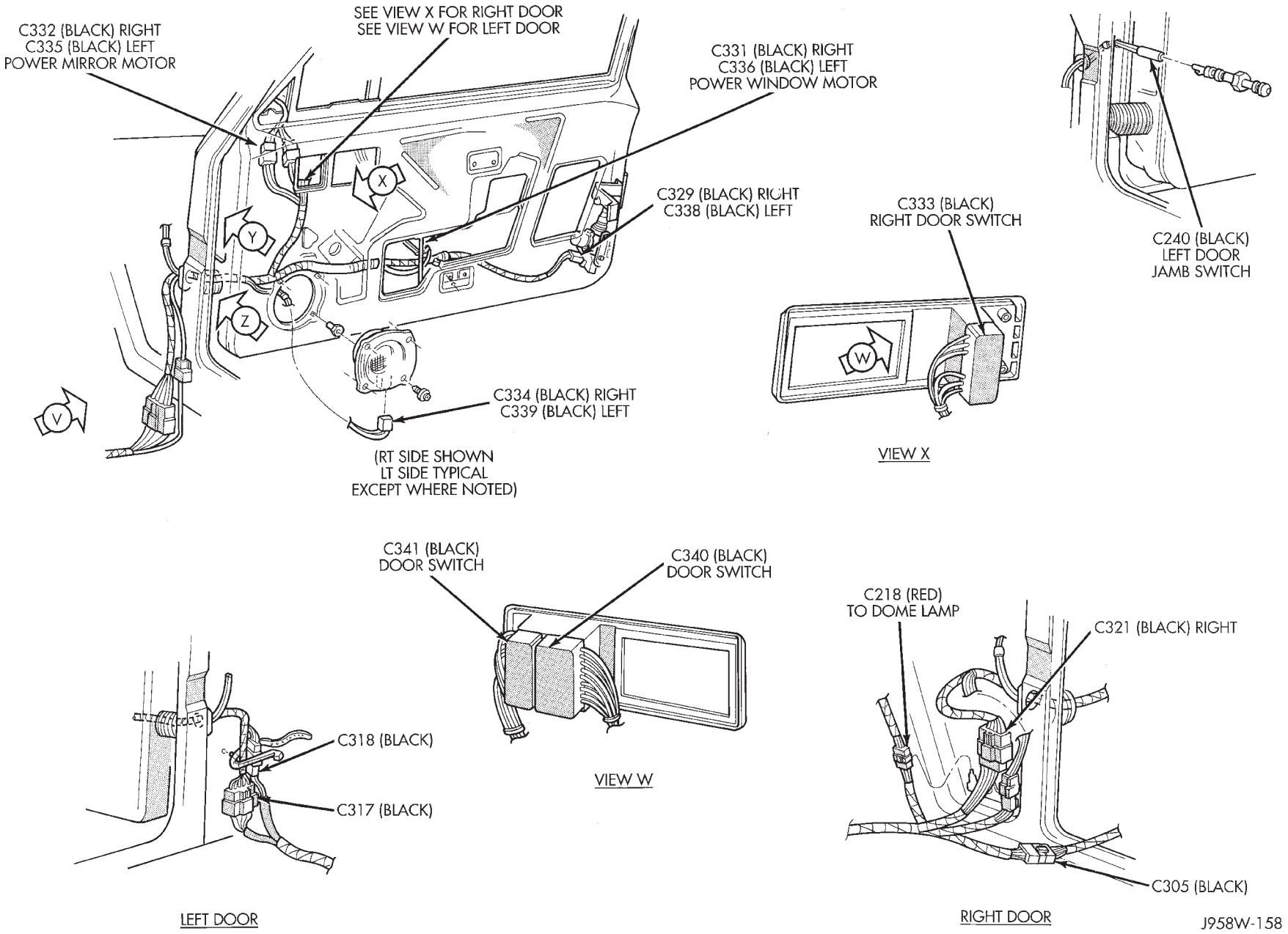

Fig. 17 Front Door Wiring Connectors

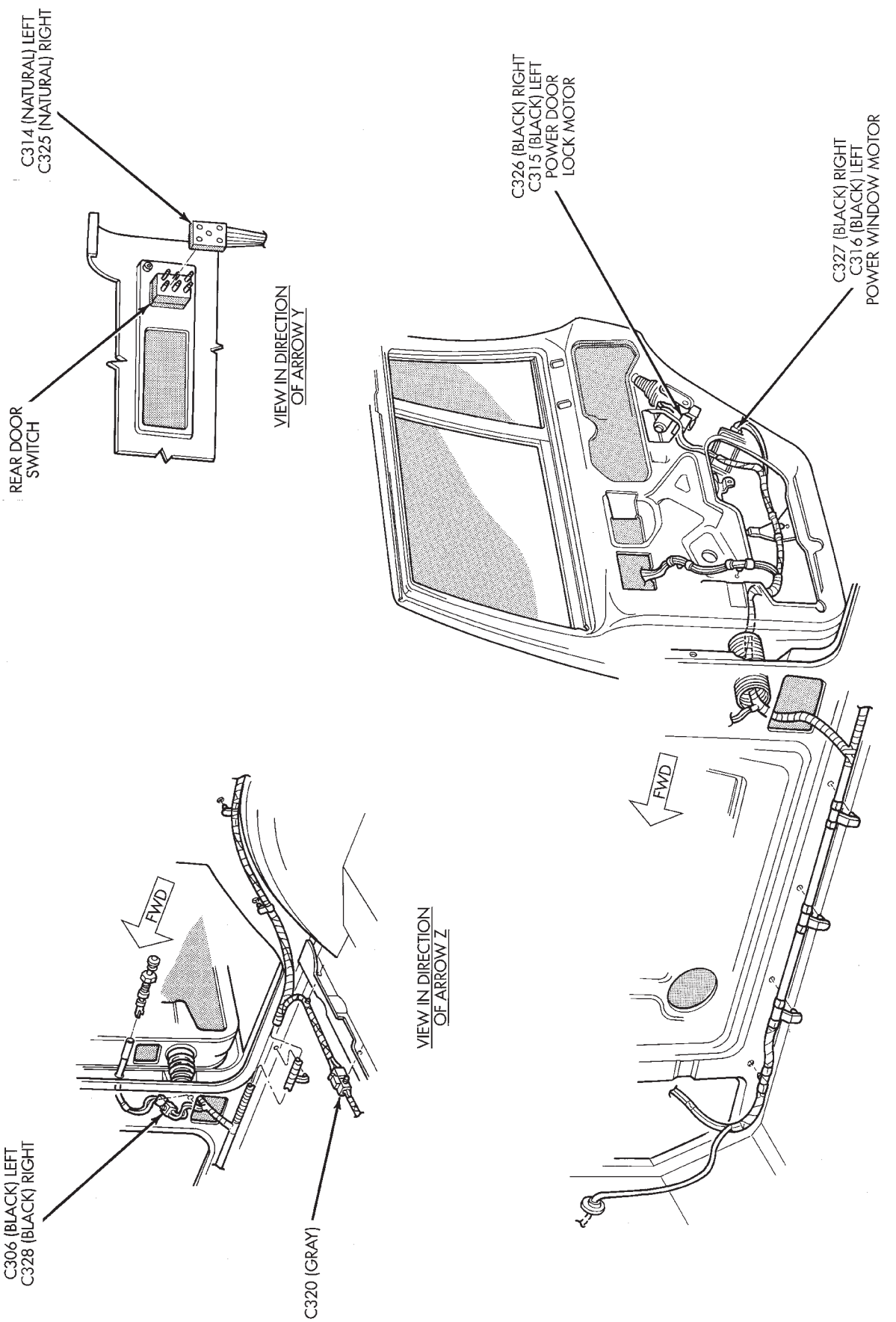

Fig. 18 Rear Door Wiring Connectors

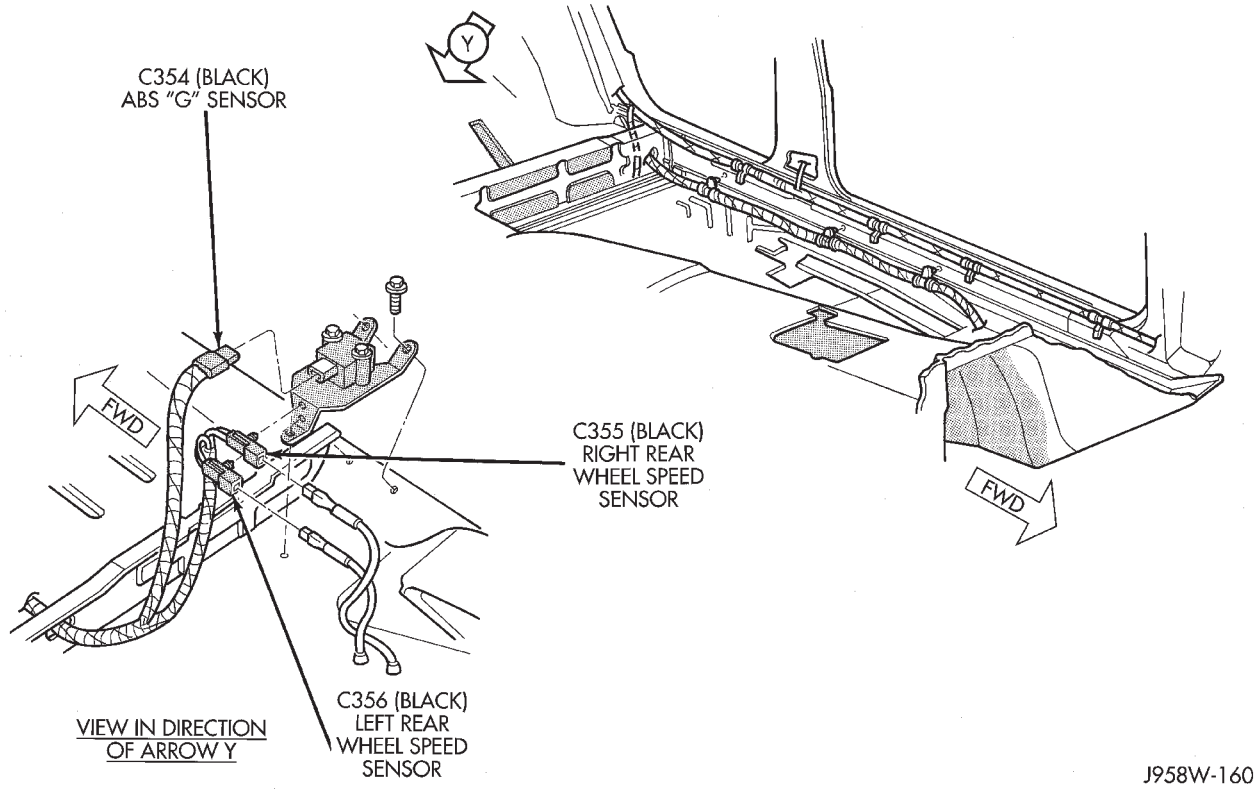

Fig. 19 ABS Sensors Wiring Connections

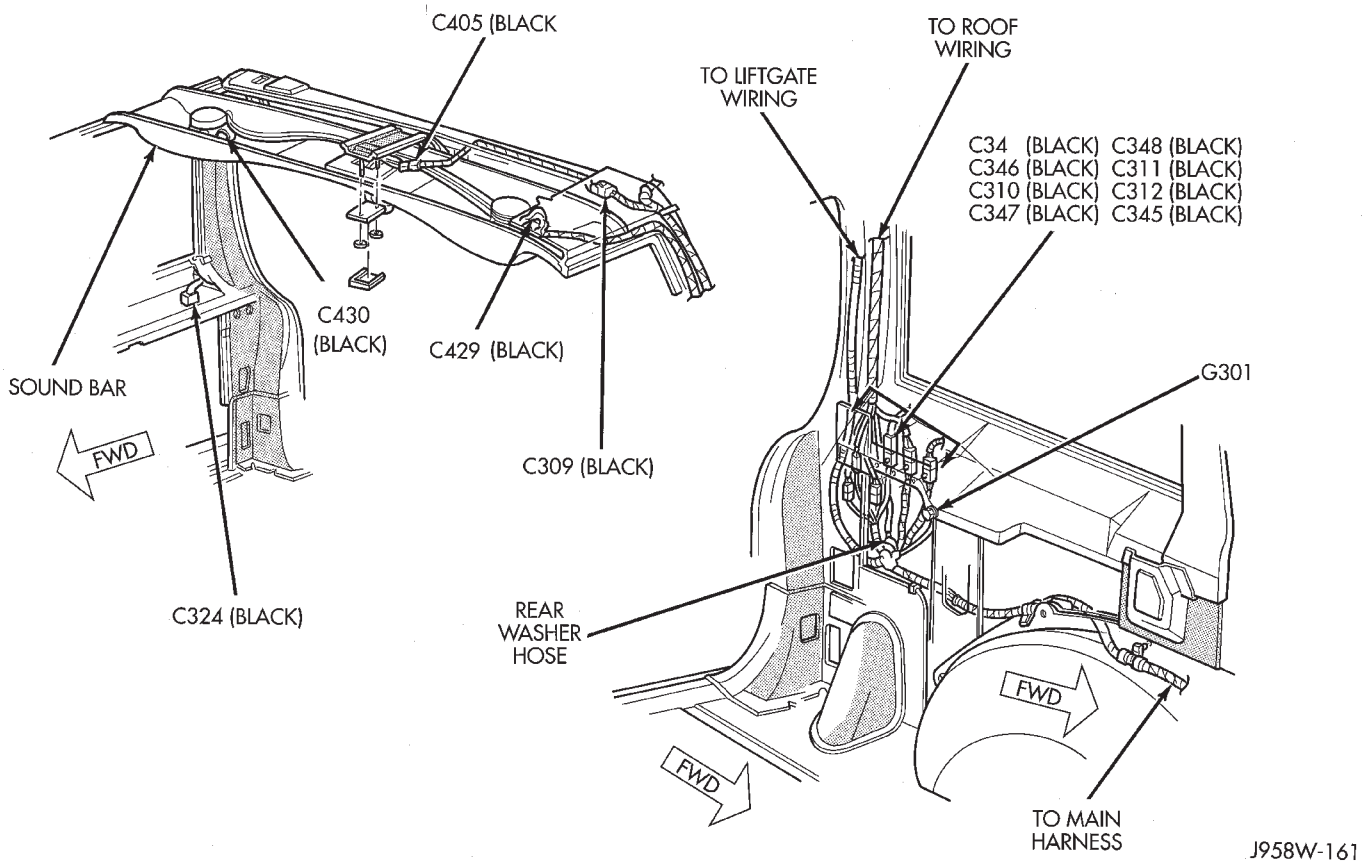

Fig. 20 Rear Compartment Wiring Connectors

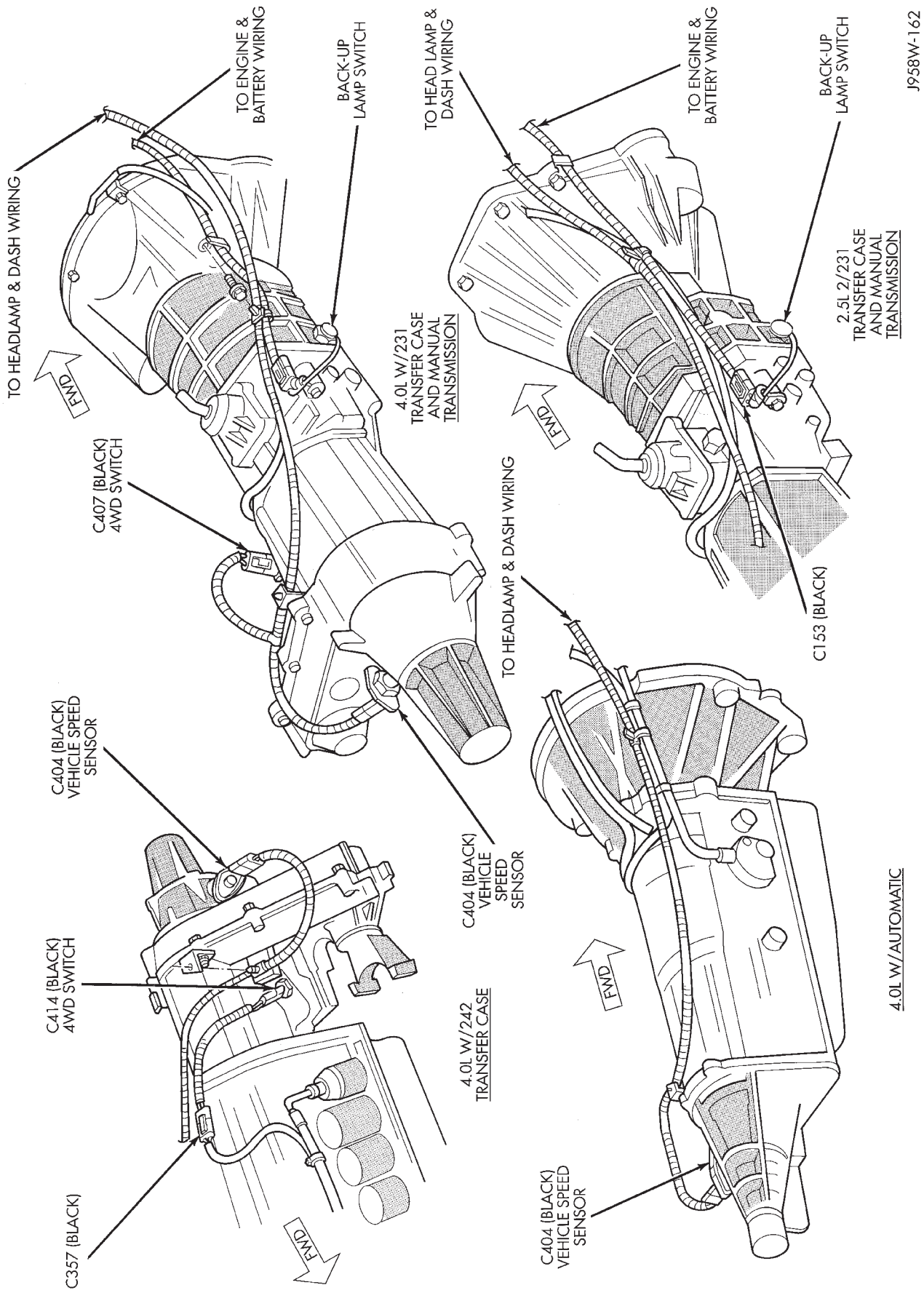

Fig. 21 Transmission Wiring Connectors

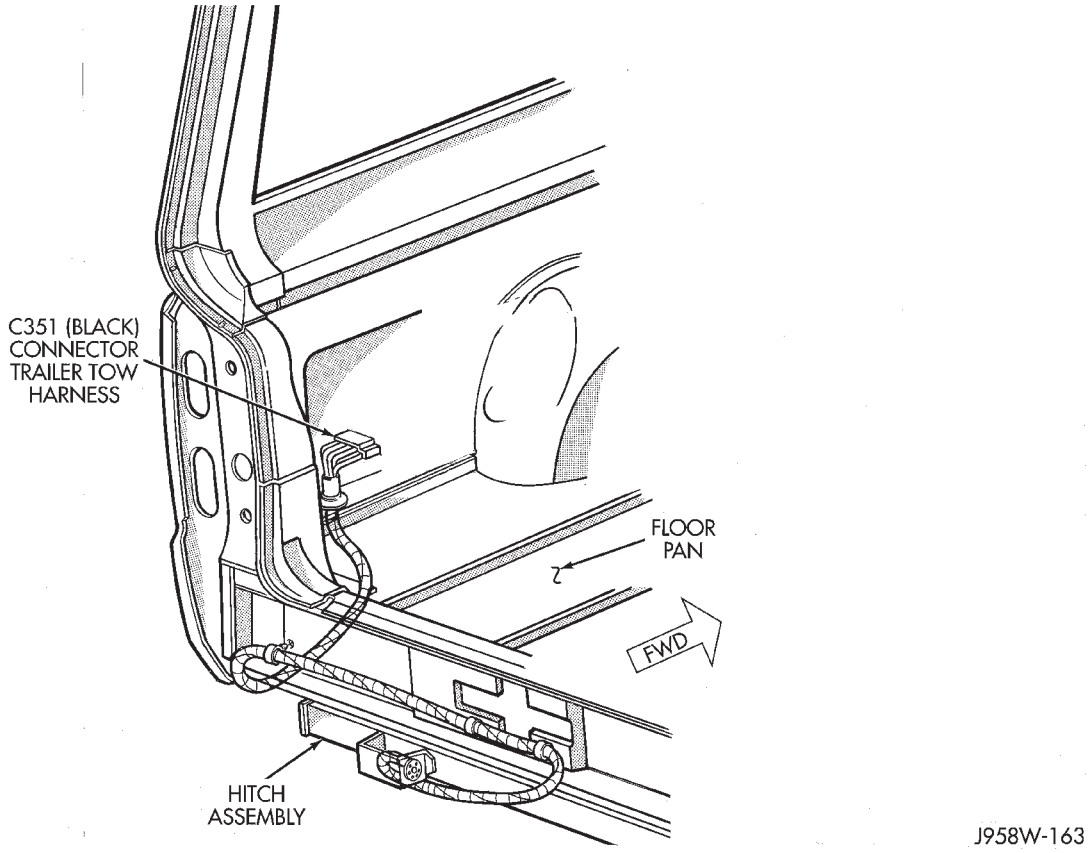

Fig. 22 Trailer Tow Connector

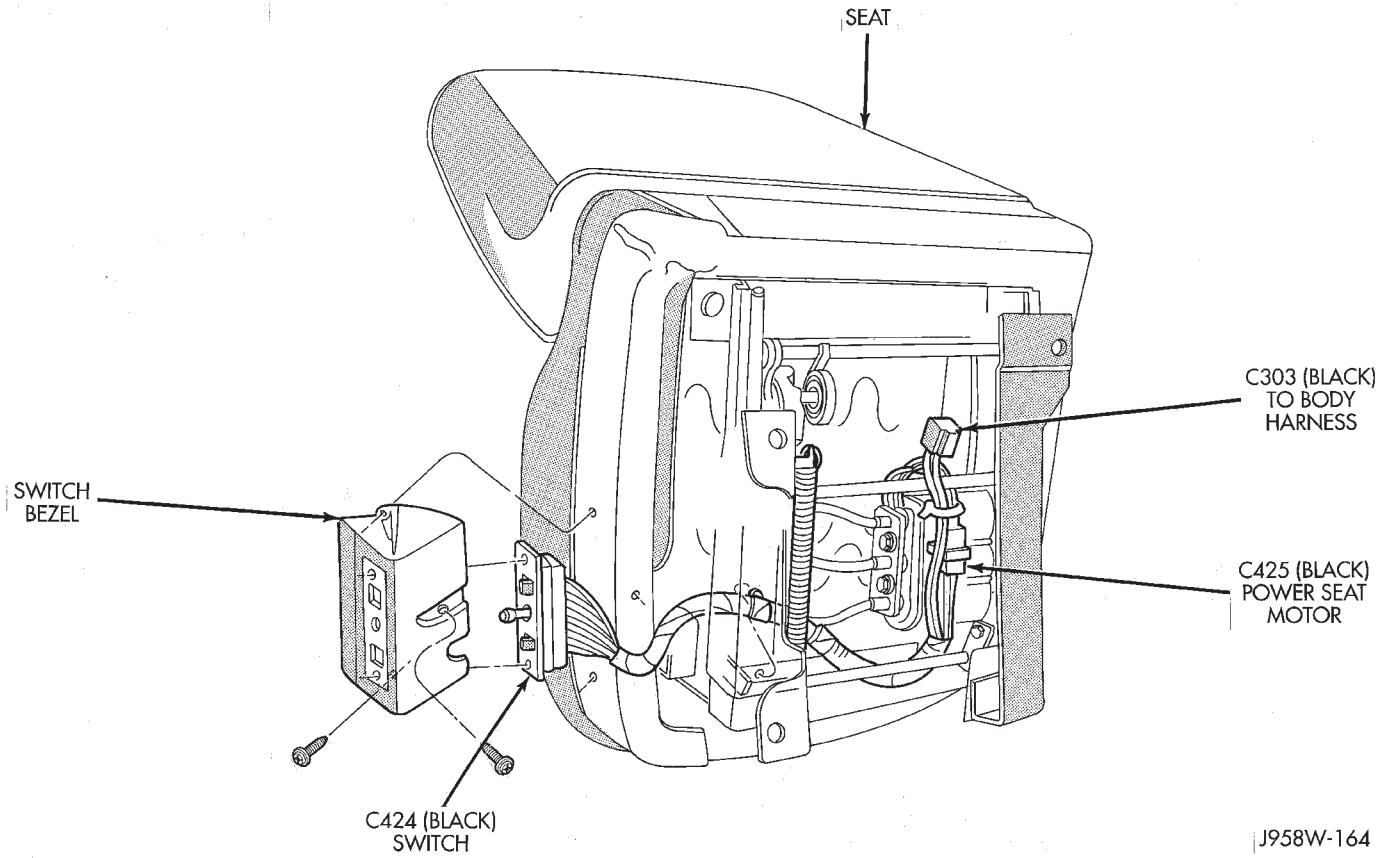

Fig. 23 Power Seat Wiring Connectors

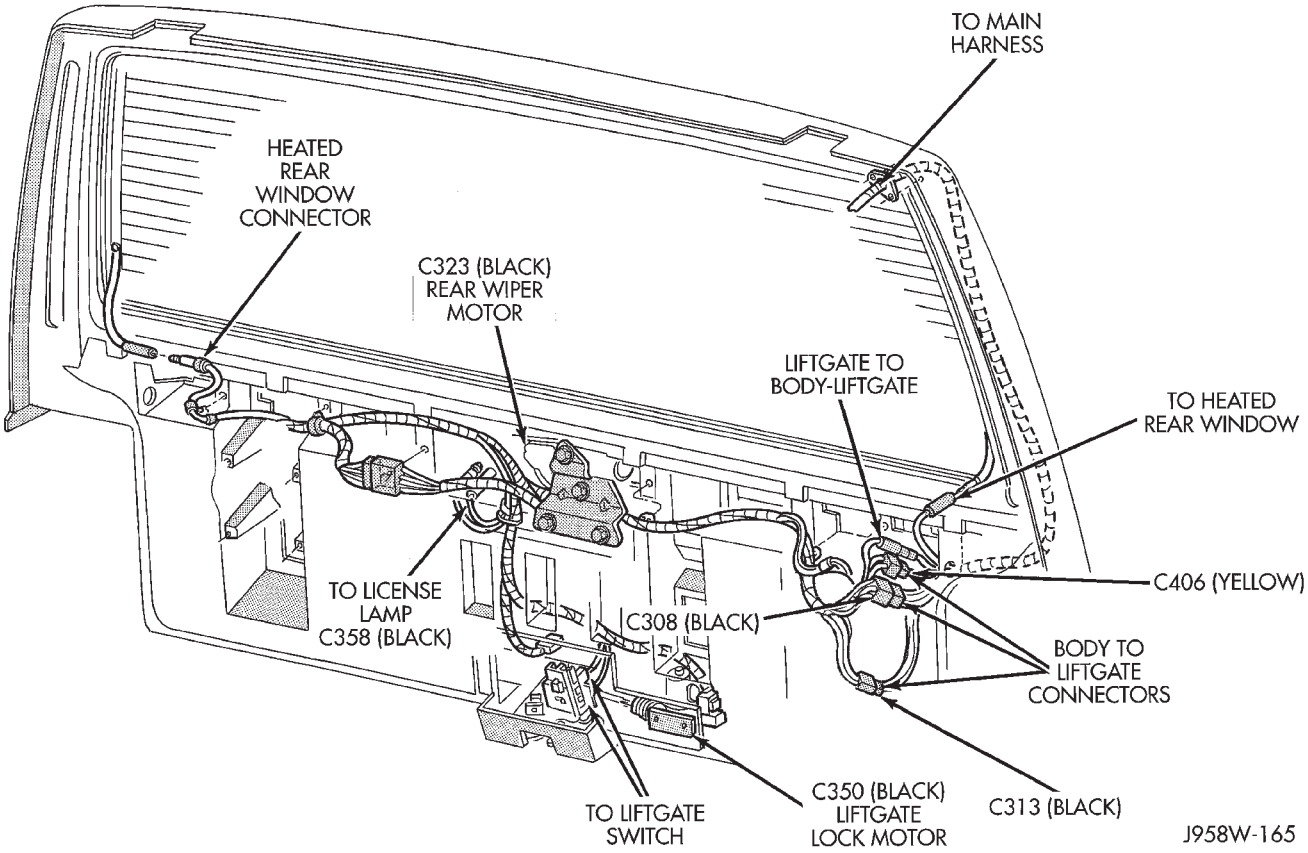

Fig. 24 Liftgate Wiring Connector

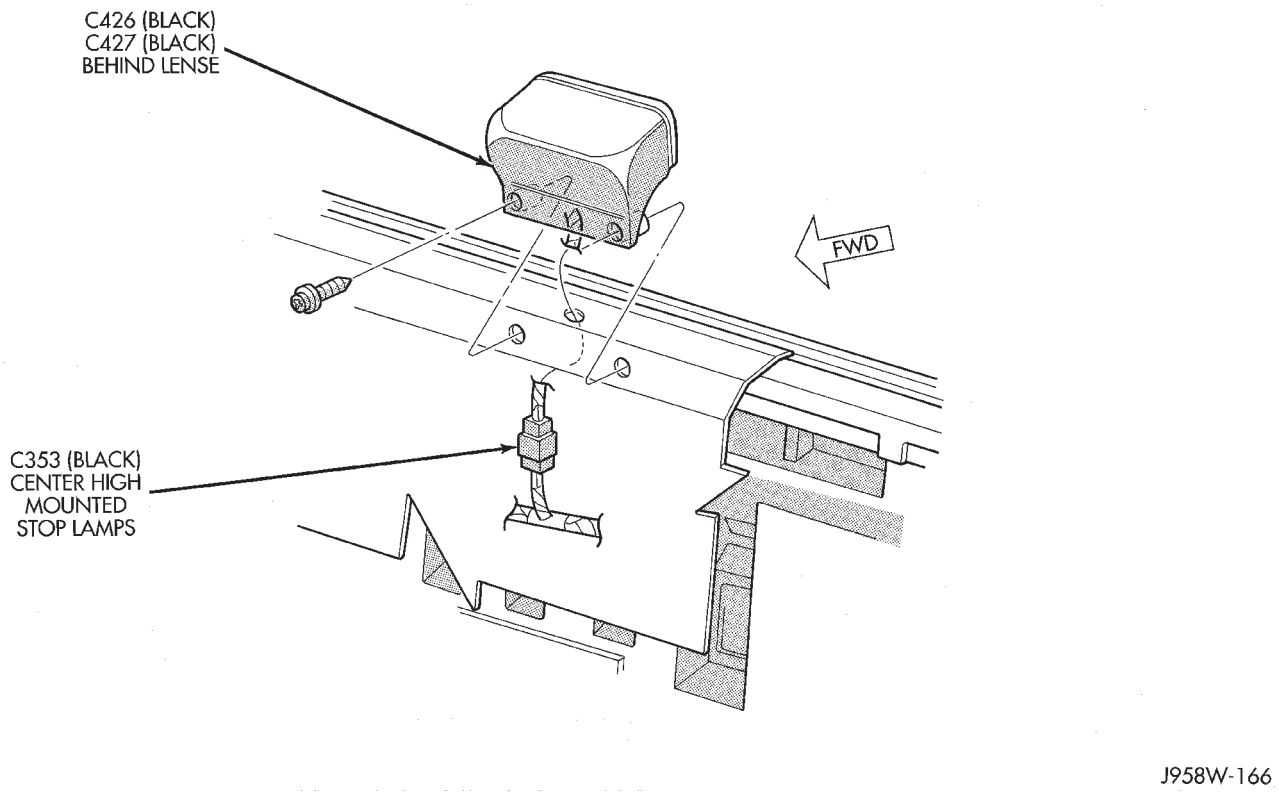

Fig. 25 Center High Mounted Stop Lamps (CHMSL)

SPLICE LOCATIONS

GENERAL INFORMATION

This section provides illustrations identifying the general location of the splices in this vehicle. A splice index is provided. Use the wiring diagrams in each section for splice number identification. Refer to the index for the proper splice number.

SPLICE LOCATIONS

Splice Number	Locations	Fig.
S101	Near Generator T/O	4
S102	Near Bulkhead T/O	2
S103	Near Bulkhead T/O	2
S104	Near Bulkhead T/O	2
S105	Near Bulkhead T/O	2
S106	Near Bulkhead T/O	1
S107	Near Wiper Motor T/O	1
S108	Near Wiper Motor T/O	1
S109	Near Wiper Motor T/O	1
S110	Center of Dash Panel Near Grommet	1
S111	Near T/O for ABS Diode	7
S112	Near T/O for Map Sensor	1
S113	Near T/O for Injector #5 and #6	4
S114	Near T/O for Injector #5 and #6	4
S115	Near T/O for Injector #5 and #6	4
S116	Near T/O for Injector #5 and #6	4
S117	Near T/O for Map Sensor	1
S118	Near T/O for Map Sensor	1
S119	Near Distributor T/O	1
S120	Between Distributor T/O and Underhood Lamp T/O	1
S121	Between Distributor T/O and Underhood Lamp T/O	1
S122	Between Distributor T/O and Underhood Lamp T/O	1
S123	RT Side of Cowl Panel	1
S124	RT Side of Cowl Panel	1
S125	Near T/O for PDC	1
S126	Near T/O for Oil Pressure Switch	5
S127	Near Generator T/O	5
S128	LT Side of Grille Panel	3
S129	LT Side of Grille Panel	3
S130	Center of Grille Panel	3
S201	Near Body Harness Connector T/O	6
S202	Near Body Harness Connector T/O	6
S203	Near Body Harness Connector T/O	6
S204	Near Relay Center	6
S205	Near T/O for Headlamp Switch	6
S206	Near T/O for Telltale	6
S207	Near T/O for Cluster	6
S208	Near T/O for Cluster	6
S209	Right Side of Cluster	6
S210	Right Side of Cluster	6
S211	Near Instrument Panel Ground T/O	6
S212	Near Wiper Switch T/O	6
S213	Near Antenna T/O	7
S214	Near Blower Resistor T/O	7
S215	Right Side of Instrument Panel	7
S301	In Left Rear Door T/O	8
S302	Near Left C-Pillar	8
S303	Near Left C-Pillar	8
S304	Near Left C-Pillar	8
S305	Near Left C-Pillar	8
S306	Near Left C-Pillar	8
S307	Left Rear Wheel Well	10
S308	Left Rear Wheel Well	10
S309	Near Left Rear Door T/O	8
S310	Near Left Rear Door T/O	8
S311	Left Side of Floor Tunnel	9
S312	Top of Floor Tunnel	9
S313	In Power Mirror Switch T/O	9
S314	Right A- Pillar	11
S315	Near RT Vanity Mirror T/O	11
S316	Near RT Vanity Mirror T/O	11
S317	In Trailer Tow Harness Near Grommet	14
S318	In Trailer Tow Harness Near Grommet	14
S319	In Liftgate	13
S320	Right A-Pillar	11
S321	In Left Front Door	12
S401	In Left Rear Tail Lamp	Not Shown
S402	In Right Rear Tail Lamp	Not Shown
S403	In Left Rear Tail Lamp	Not Shown
S404	In Right Rear Tail Lamp	Not Shown

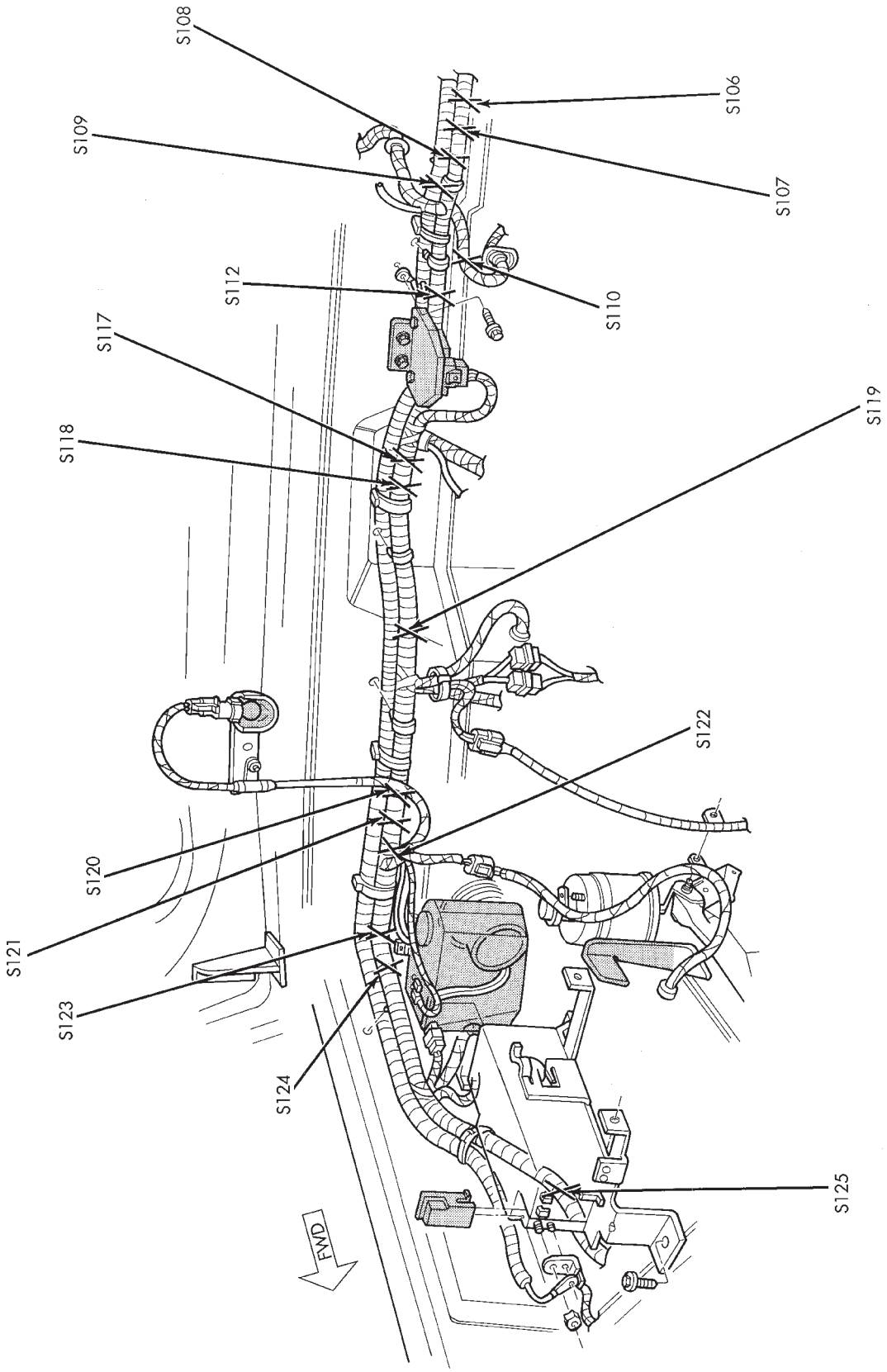

Fig. 1 Engine Compartment Splices XJ

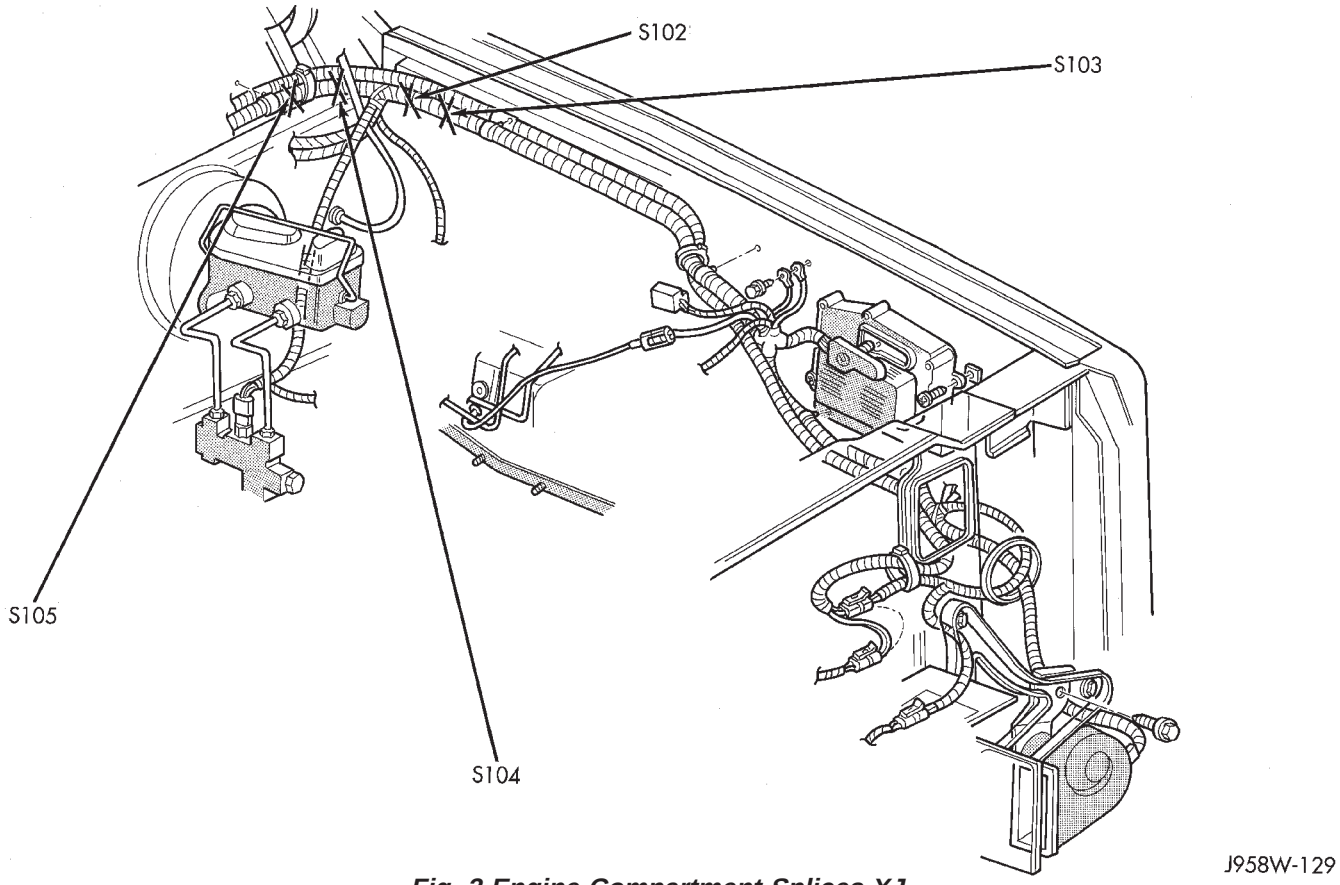

Fig. 2 Engine Compartment Splices XJ

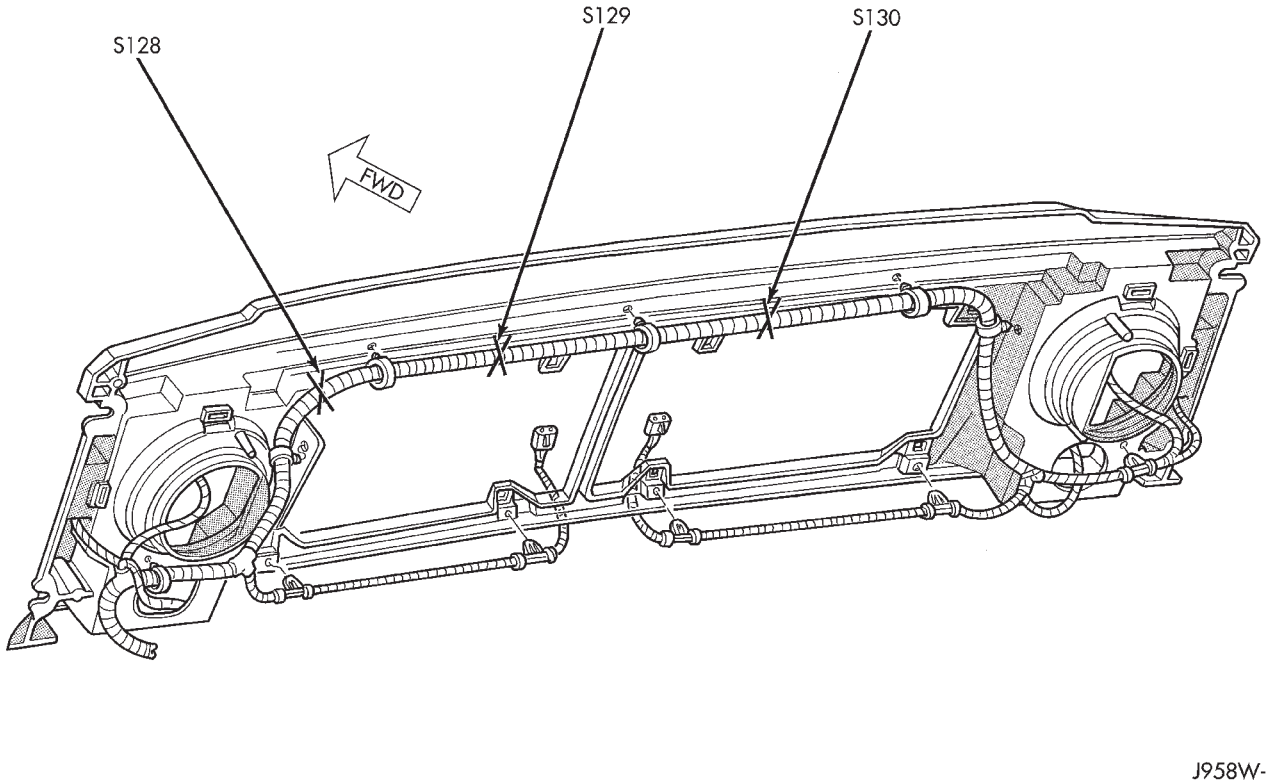

Fig. 3 Front End Splices XJ

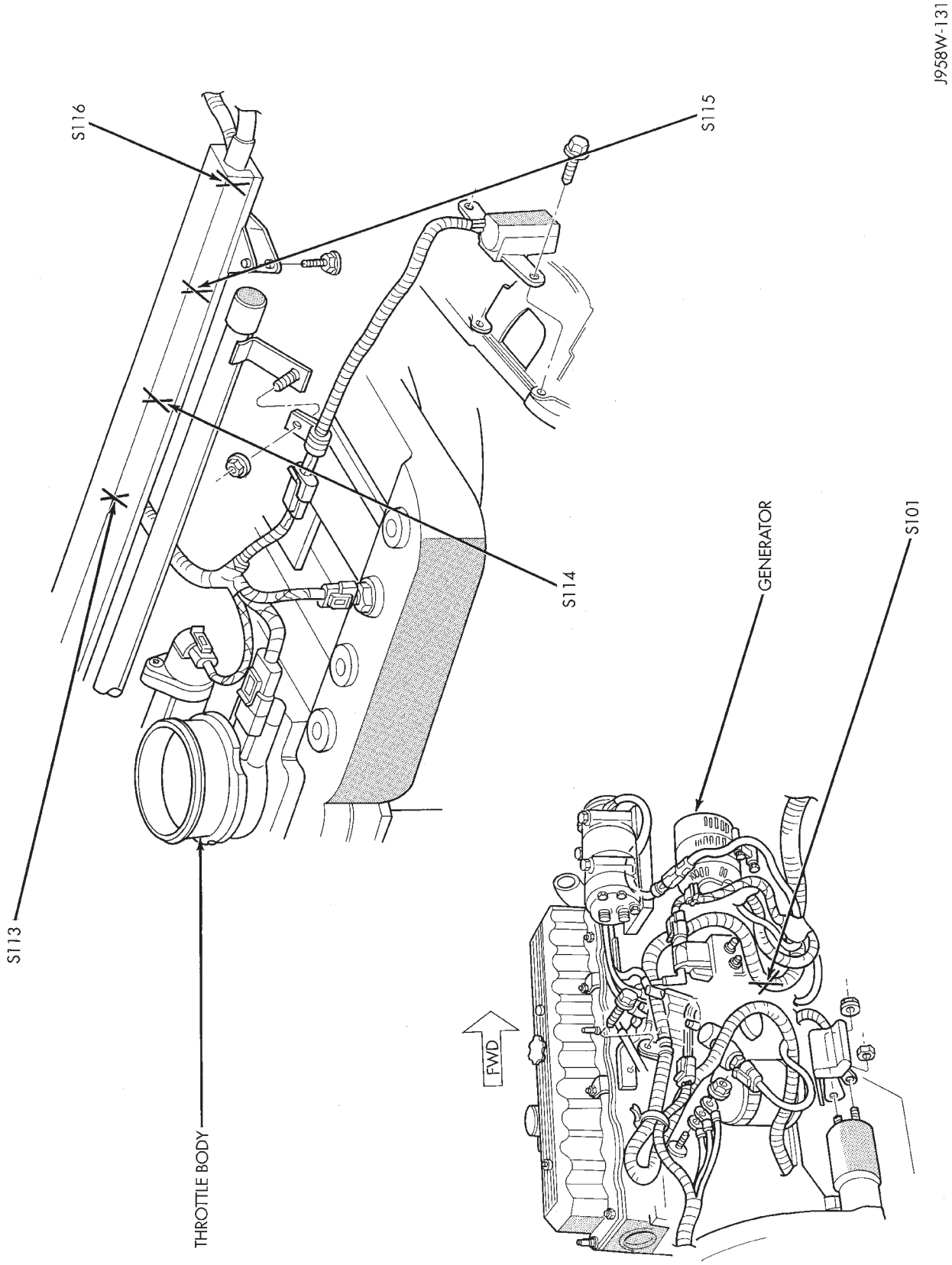

Fig. 4 Engine Splices 4.0L XJ

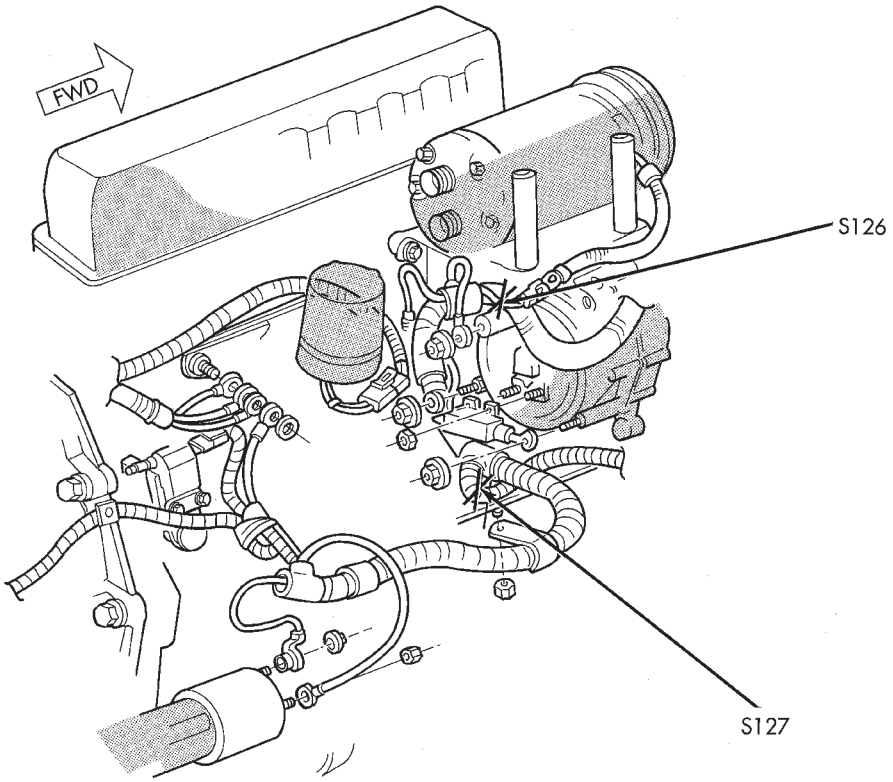

Fig. 5 Engine Splices 2.5L XJ

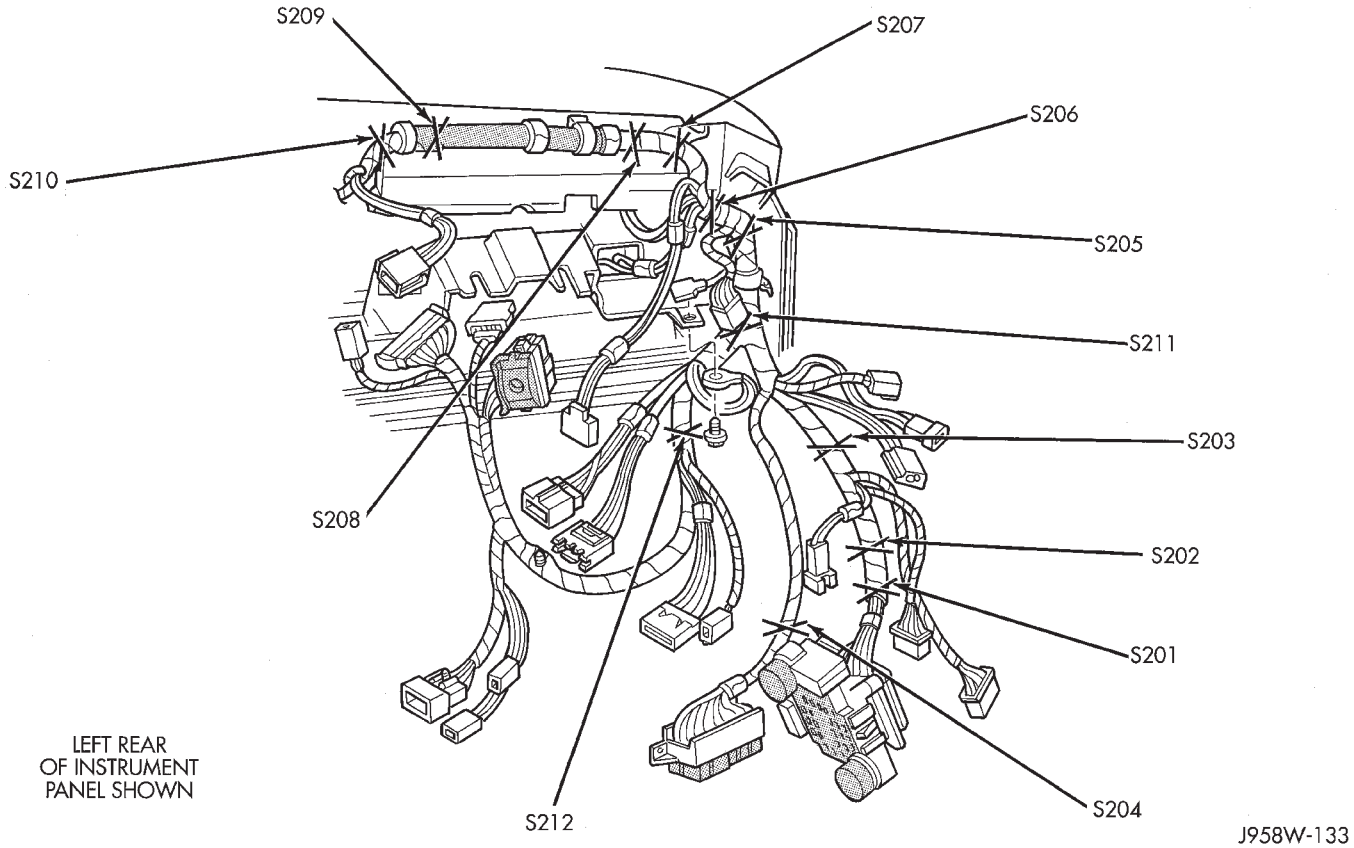

Fig. 6 Instrument Panel Splices XJ

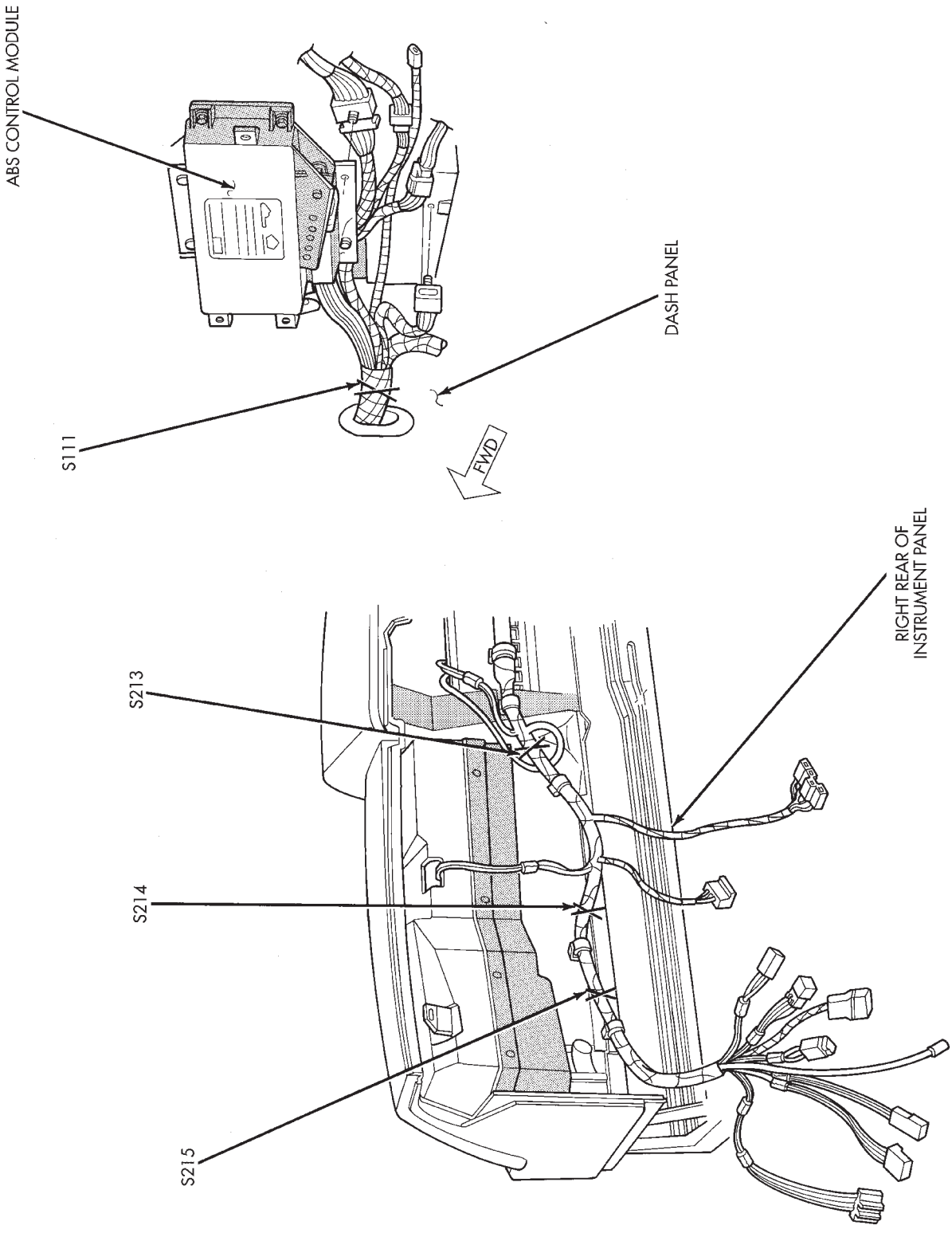

Fig. 7 Instrument Panel Splices XJ

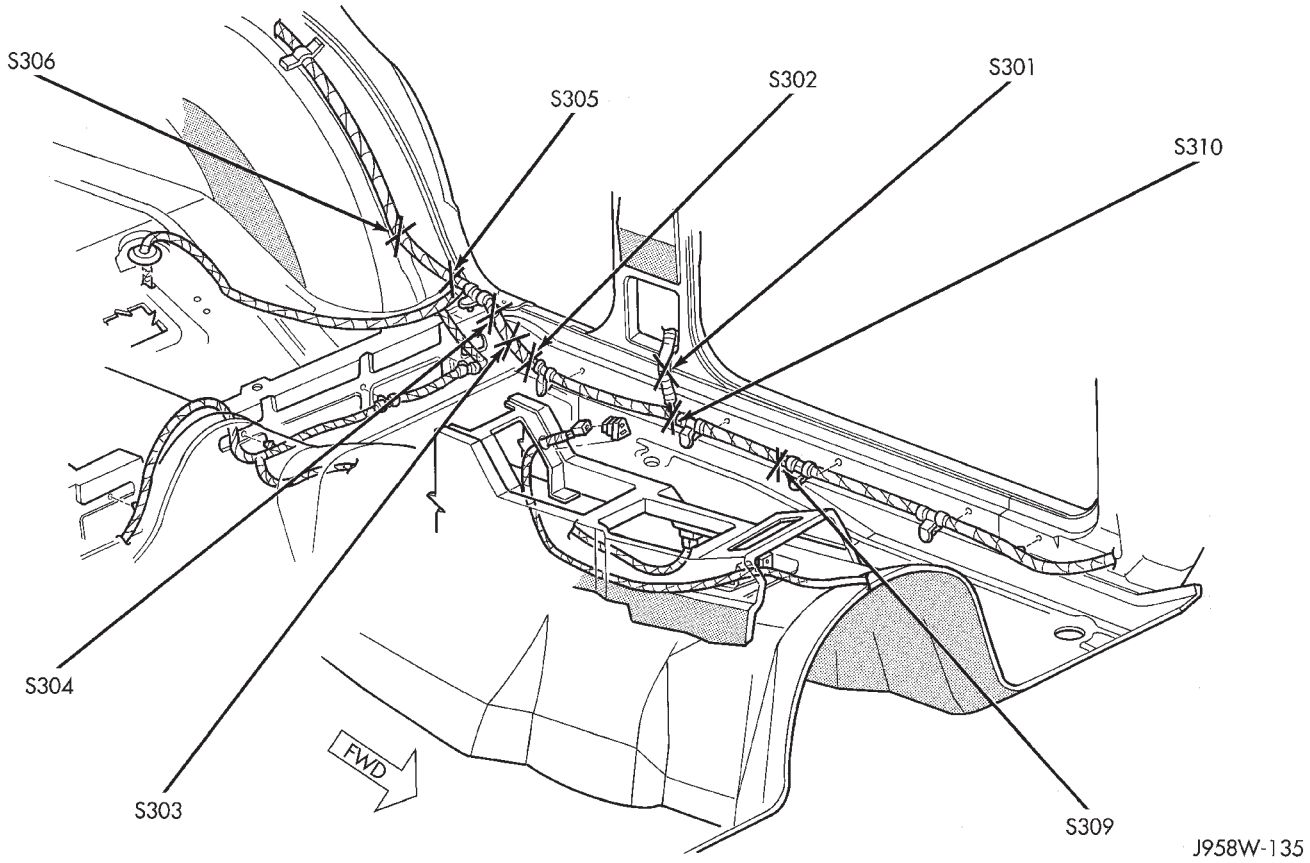

Fig. 8 Body Splices XJ

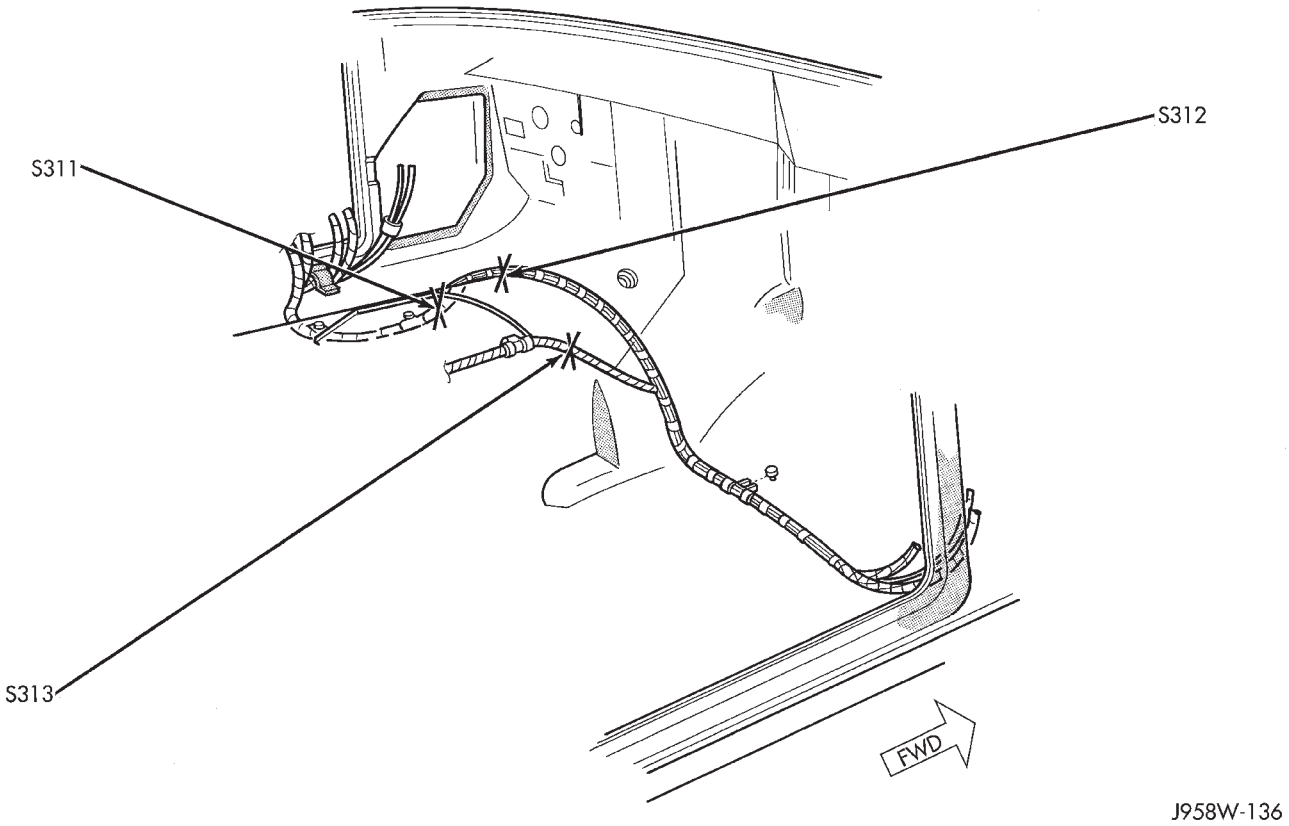

Fig. 9 Cross-body Splices XJ

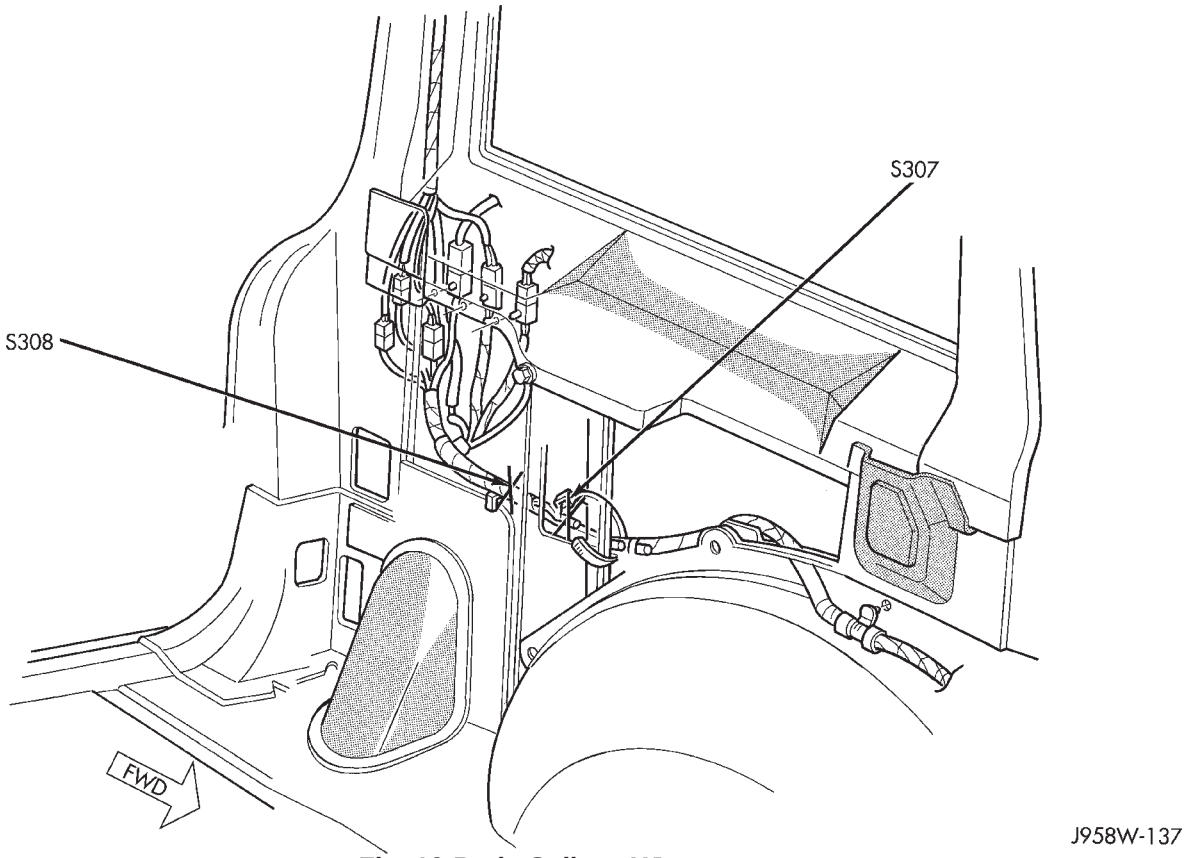

Fig. 10 Body Splices XJ

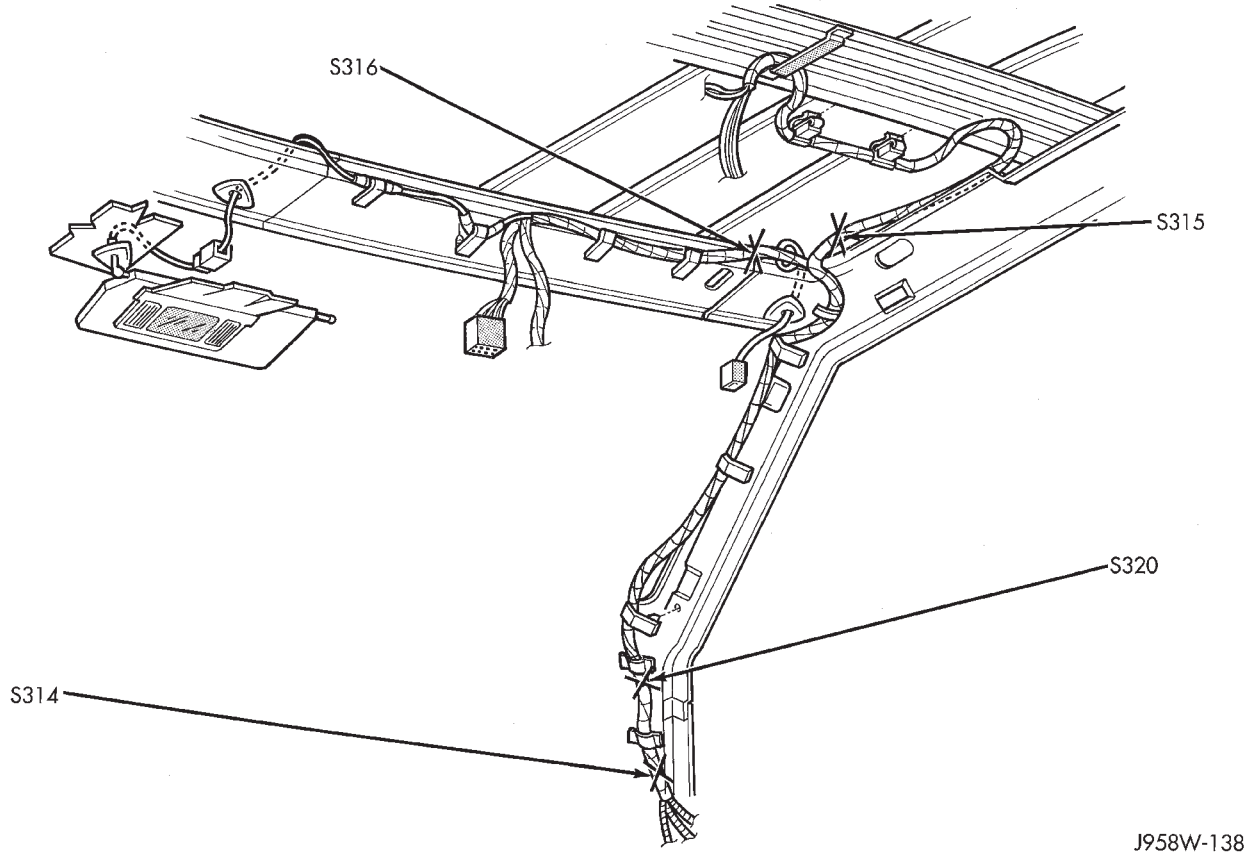

Fig. 11 Roof Splices XJ

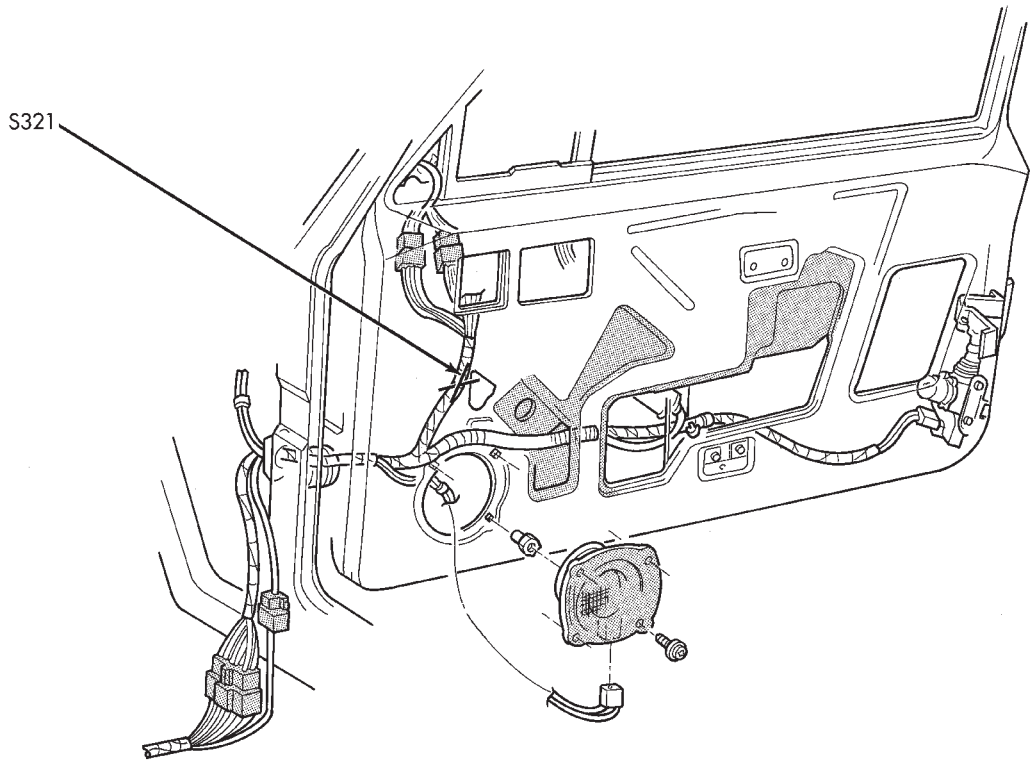

J958W-139

Fig. 12 Door Splices XJ

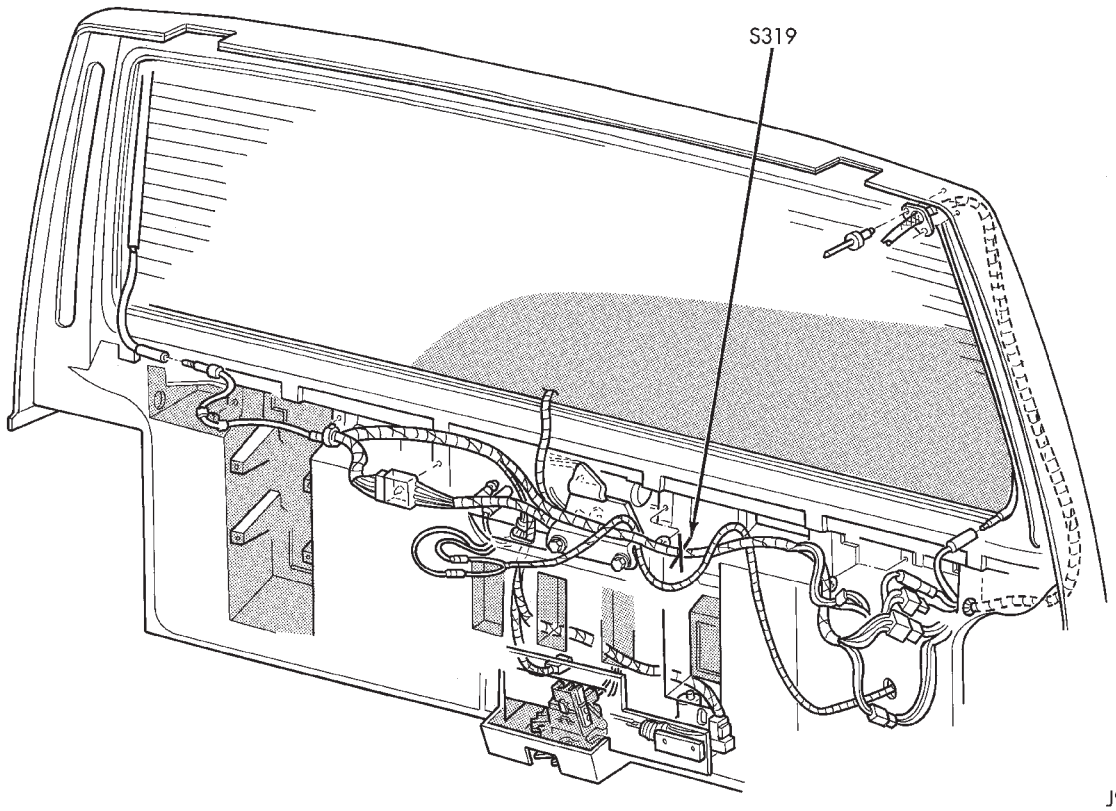

J958W-140

Fig. 13 Liftgate Splices XJ

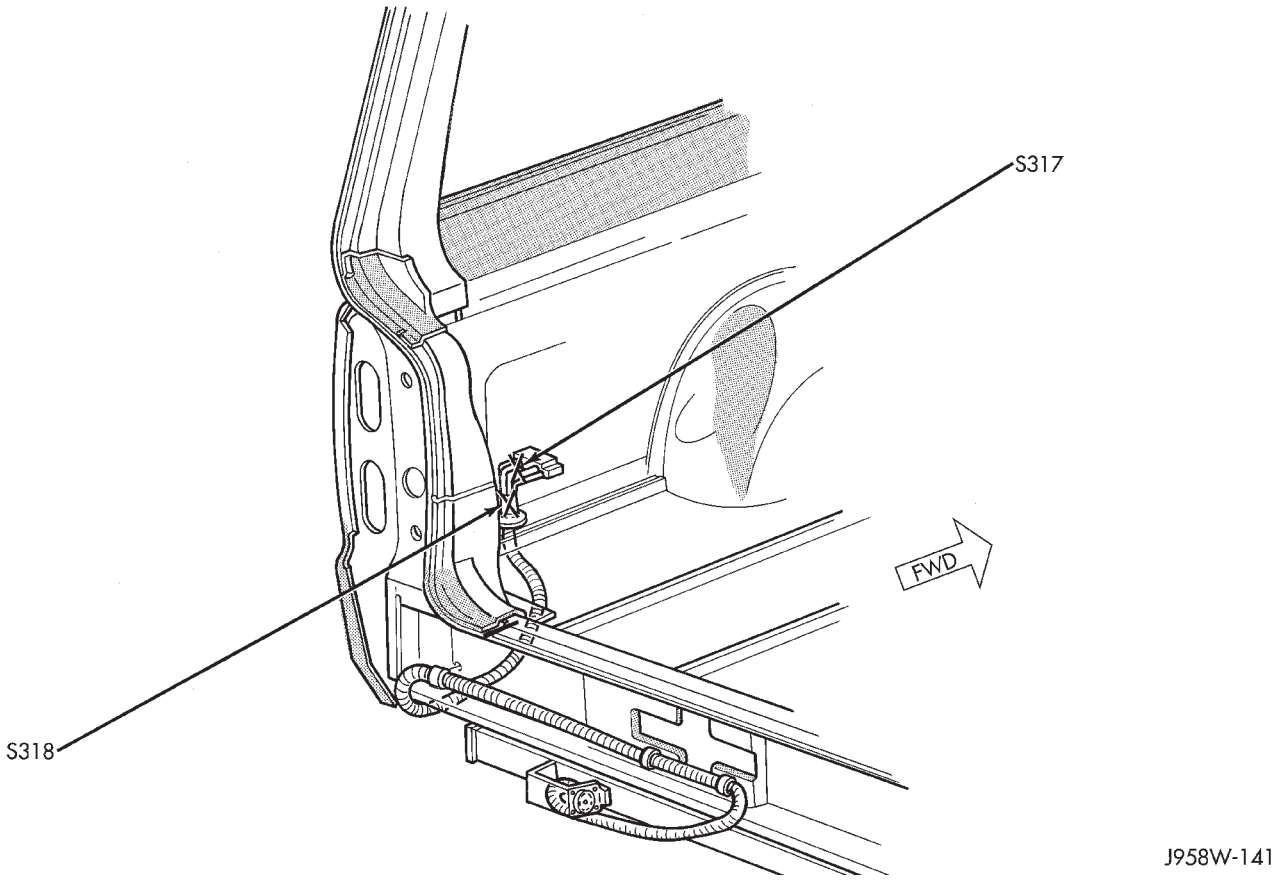

Fig. 14 Trailer Tow Splices XJ

WIRING DIAGRAMS

CONTENTS

page

8W-01 GENERAL INFORMATION—WIRING DIAGRAMS 8W-01-1
8W-10 FUSE/FUSE BLOCK 8W-10-1
8W-11 POWER DISTRIBUTION 8W-11-1
8W-15 GROUND DISTRIBUTION 8W-15-1
8W-20 CHARGING SYSTEM 8W-20-1
8W-21 STARTING SYSTEM 8W-21-1
8W-30 FUEL/IGNITION 8W-30-1
8W-31 TRANSMISSION CONTROLS 8W-31-1
8W-32 ANTI-LOCK BRAKES 8W-32-1
8W-33 VEHICLE SPEED CONTROL 8W-33-1
8W-40 INSTRUMENT CLUSTER 8W-40-1
8W-41 HORN/CIGAR LIGHTER 8W-41-1
8W-42 AIR CONDITIONING/HEATER 8W-42-1
8W-44 INTERIOR LIGHTING 8W-44-1
8W-47 AUDIO SYSTEM 8W-47-1

page

8W-48 HEATED REAR WINDOW 8W-48-1
8W-49 OVERHEAD CONSOLE 8W-49-1
8W-50 FRONT LIGHTING 8W-50-1
8W-51 REAR LIGHTING 8W-51-1
8W-52 TURN SIGNALS 8W-52-1
8W-53 WIPERS 8W-53-1
8W-54 TRAILER TOW 8W-54-1
8W-60 POWER WINDOWS 8W-60-1
8W-61 POWER DOOR LOCKS 8W-61-1
8W-62 POWER MIRRORS 8W-62-1
8W-63 POWER SEAT 8W-63-1
8W-70 SPLICE INFORMATION 8W-70-1
8W-80 CONNECTOR PIN OUTS 8W-80-1
8W-90 CONNECTOR LOCATIONS 8W-90-1
8W-95 SPLICE LOCATIONS 8W-95-1

HOW TO USE THIS GROUP

The purpose of this group is to show the electrical circuits in a clear, simple fashion and to make troubleshooting easier. Components that work together are shown together. All electrical components used in a specific system are shown on one diagram. The feed for a system is shown at the top of the page. All wires, connectors, splices, and components are shown in the flow of current to the bottom of the page. Wiring which is not part of the circuit represented is referenced to another page/section, where the complete circuit is shown. In addition, all switches, components, and modules are shown in the **at rest position with the doors closed and the key removed from the ignition.**

If a component is part of several different circuits, it is shown in the diagram for each. For example, the headlamp switch is the main part of the exterior lighting, but it also affects the interior lighting and the chime warning system.

It is important to realize that no attempt is made on the diagrams to represent components and wiring as they appear on the vehicle. For example, a short piece of wire is treated the same as a long one. In addition, switches and other components are shown as simply as possible, with regard to function only.

The wiring diagram show circuits for all wheelbases. If there is a difference in systems or components between wheel-bases, an identifier is placed next to the component.

SECTION IDENTIFICATION

Sections in Group 8W are organized by sub-systems. The sections contain circuit operation descriptions, helpful information, and system diagrams. The intention is to organize information by system, consistently from year to year.

CONNECTOR LOCATIONS

Section 8W-90 contains Connector Location illustrations. The illustrations contain the connector number and component identification. Connector Location charts in Section 8W-90 reference the illustration number for components and connectors.

Section 8W-80 shows each connector and the circuits involved with that connector. The connectors are identified using the number on the Diagram pages.

SPLICE LOCATIONS

Splice Location charts in Section 8W-70 show the entire splice, and provide references to other sections the splice serves.

Section 8W-95 contains illustrations that show the general location of the splices in each harness. The illustrations show the splice by number, and provide a written location.

FUSE/FUSE BLOCK

GENERAL INFORMATION

This section covers the Fuse Block and all circuits involved with it. For additional information on system operation, refer to the appropriate section of the wiring diagrams.

DIAGRAM INDEX

Component	Page
ABS Control Module	8W-10-4
Chime/Buzzer Module	8W-10-5, 7, 8
Fuse Block	8W-10-2, 3
Fuse 1 (Fuse Block)	8W-10-10
Fuse 3 (Fuse Block)	8W-10-11
Fuse 3 (PDC)	8W-10-6, 10, 12
Fuse 4 (Fuse Block)	8W-10-11
Fuse 5 (Fuse Block)	8W-10-7
Fuse 5 (PDC)	8W-10-5, 8
Fuse 6 (Fuse Block)	8W-10-7
Fuse 6 (PDC)	8W-10-4, 6, 11
Fuse 7 (Fuse Block)	8W-10-12
Fuse 7 (PDC)	8W-10-8
Fuse 8 (Fuse Block)	8W-10-12
Fuse 9 (Fuse Block)	8W-10-5
Fuse 10 (Fuse Block)	8W-10-5
Fuse 11 (PDC)	8W-10-6
Fuse 12 (Fuse Block)	8W-10-4
Fuse 12 (PDC)	8W-10-6
Fuse 13 (Fuse Block)	8W-10-4
Fuse 14 (Fuse Block)	8W-10-4
Fuse 18 (Fuse Block)	8W-10-4
Fuse 19 (Fuse Block)	8W-10-4
Fuse 20 (Fuse Block)	8W-10-11
Fuse 26 (Fuse Block)	8W-10-7
Headlamp Delay Relay	8W-10-5
Headlamp Switch	8W-10-5, 8
Headlamp Delay Module	8W-10-7
Heated Rear Window	8W-10-8
Ignition Switch	8W-10-4, 6, 11
In-Line Circuit Breaker (Stop Lamp Relay)	8W-10-10
Instrument Cluster	8W-10-7, 9
Overhead Console	8W-10-5, 7
Powertrain Control Module	8W-10-6

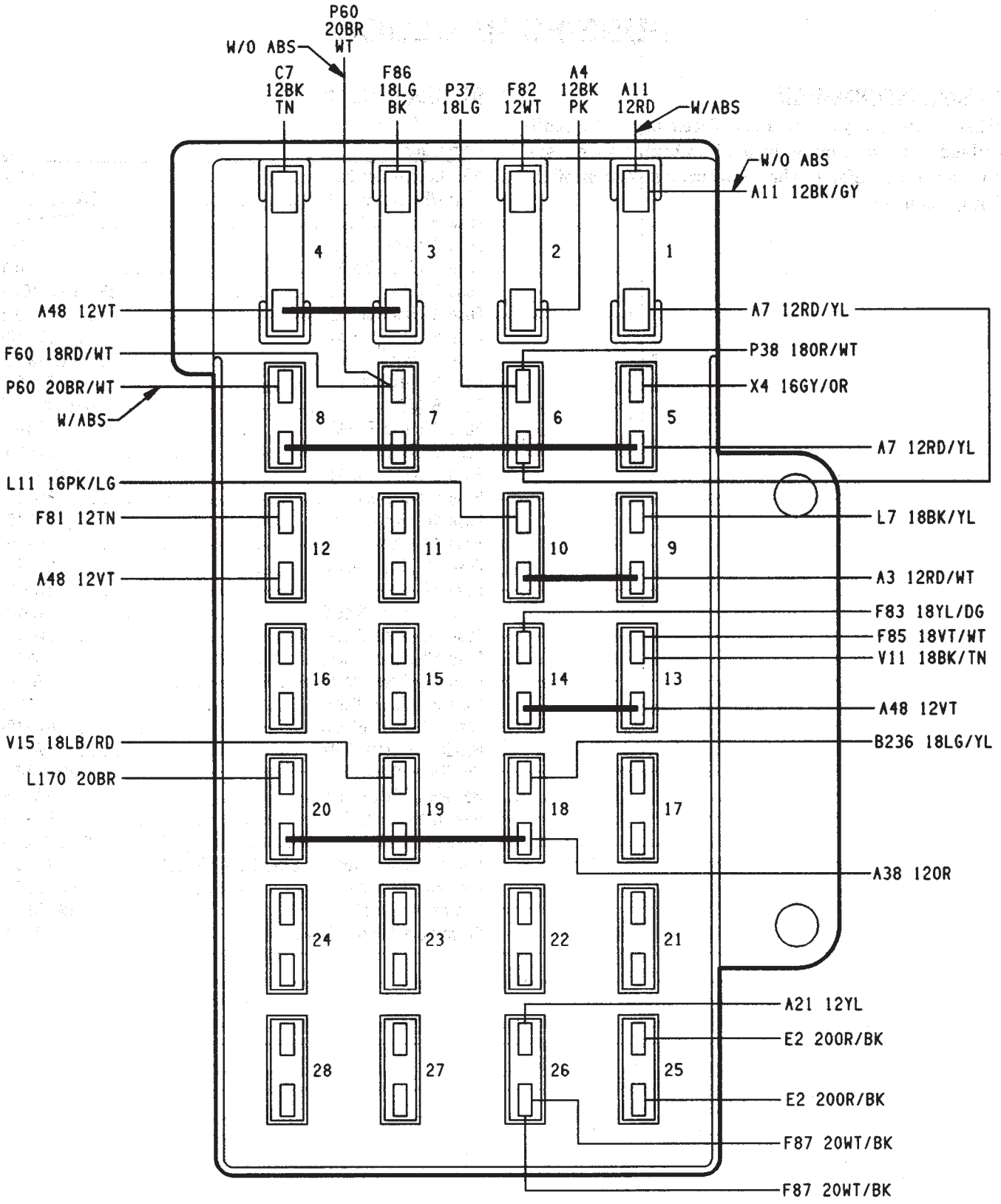
P60
20BR
WT
W/O ABS
C7
12BK
TN
F86
18LG
BK
P37
18LG
F82
12WT
A4
12BK
PK
A11
12RD
W/ABS
W/O ABS
A11 12BK/GY
4
3
2
1
A48 12VT
A7 12RD/YL
F60 18RD/WT
P38 180R/WT
P60 20BR/WT
X4 16GY/OR
W/ABS
8
7
6
5
A7 12RD/YL
L11 16PK/LG
L7 18BK/YL
F81 12TN
12
11
10
9
A48 12VT
A3 12RD/WT
F83 18YL/DG
F85 18VT/WT
V11 18BK/TN
16
15
14
13
A48 12VT
V15 18LB/RD
B236 18LG/YL
L170 20BR
20
19
18
17
A38 120R
24
23
22
21
A21 12YL
E2 200R/BK
28
27
26
25
E2 200R/BK
F87 20WT/BK
F87 20WT/BK

J958W-13

FUSE NUMBER	AMPS	COLOR	SHEET
1	30	C.B.	8W-10-10
2	30	GREEN	8W-10-8
3	5	TAN	8W-10-11
4	30	GREEN	8W-10-11
5	20	YELLOW	8W-10-7
6	20	YELLOW	8W-10-7
7	10	RED	8W-10-12
8	10	RED	8W-10-12
9	15	LT BLUE	8W-10-5, 8W-10-8
10	15	LT BLUE	8W-10-5
11	—	—	—
12	30	GREEN	8W-10-4
13	15	LT BLUE	8W-10-4
14	20	YELLOW	8W-10-4
15	—	—	—
16	—	—	—
17	—	—	—
18	2	PINK	8W-10-4
19	20	YELLOW	8W-10-4
20	7.5	BROWN	8W-10-11
21	—	—	—
22	—	—	—
23	—	—	—
24	—	—	—
25	5	TAN	8W-10-8
26	7.5	BROWN	8W-10-7
27	—	—	—
28	—	—	—

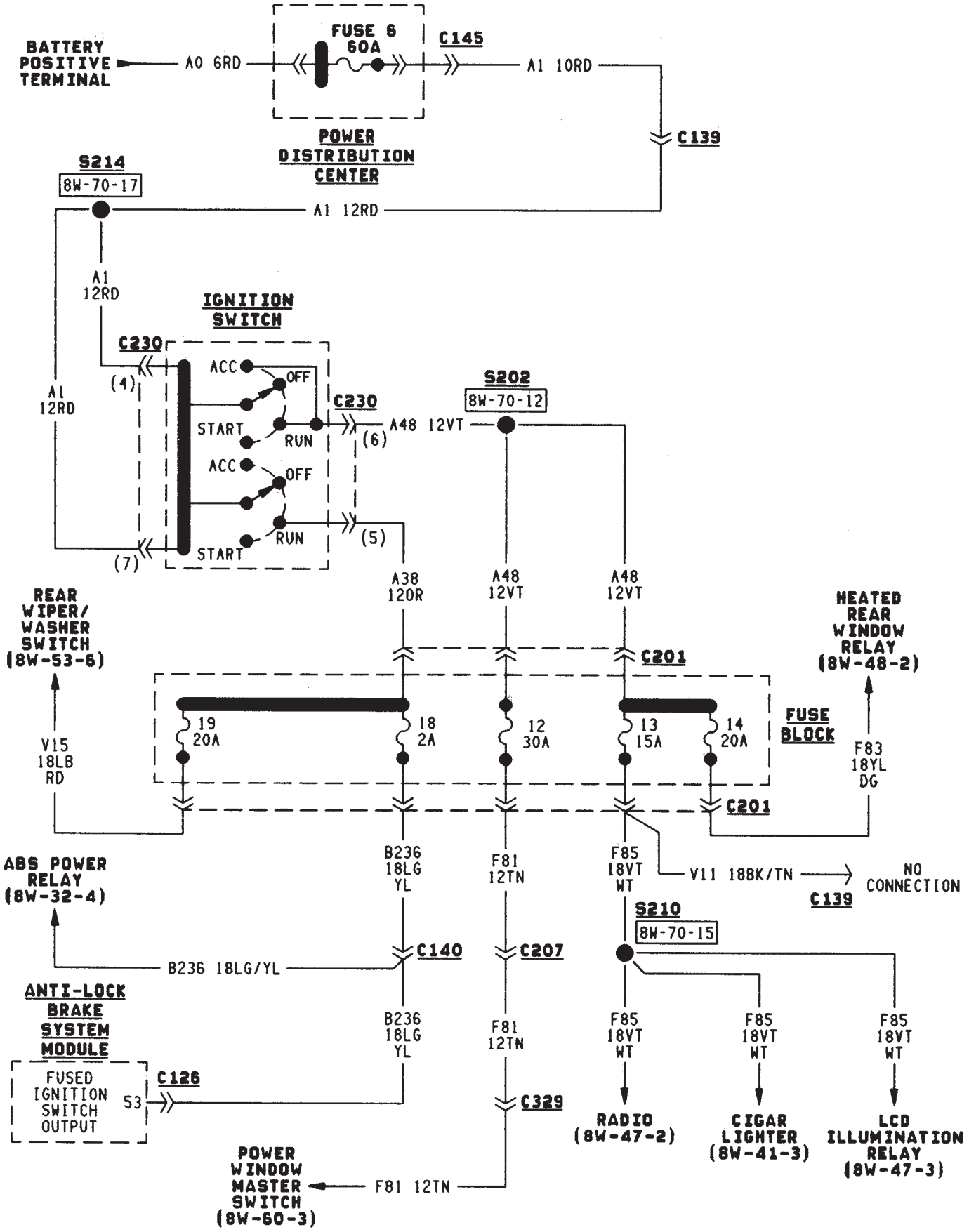
BATTERY POSITIVE TERMINAL
A0 6RD
FUSE 6 60A
C145
A1 10RD
POWER DISTRIBUTION CENTER
C139
S214
8W-70-17
A1 12RD
A1 12RD
IGNITION SWITCH
C230
(4)
ACC
OFF
START
RUN
ACC
OFF
RUN
START
(7)
C230
(6)
(5)
A48 12VT
S202
8W-70-12
A38 120R
A48 12VT
A48 12VT
C201
REAR WIPER/ WASHER SWITCH (8W-53-6)
HEATED REAR WINDOW RELAY (8W-48-2)
19 20A
18 2A
12 30A
13 15A
14 20A
FUSE BLOCK
V15 18LB RD
F83 18YL DG
C201
ABS POWER RELAY (8W-32-4)
B236 18LG YL
F81 12TN
F85 18VT WT
V11 18BK/TN
NO CONNECTION
C139
S210
8W-70-15
C140
C207
B236 18LG/YL
ANTI-LOCK BRAKE SYSTEM MODULE
FUSED IGNITION SWITCH OUTPUT
53
C126
B236 18LG YL
F81 12TN
F85 18VT WT
F85 18VT WT
F85 18VT WT
C329
RADIO (8W-47-2)
CIGAR LIGHTER (8W-41-3)
LCD ILLUMINATION RELAY (8W-47-3)
POWER WINDOW MASTER SWITCH (8W-60-3)
F81 12TN

J958W-13

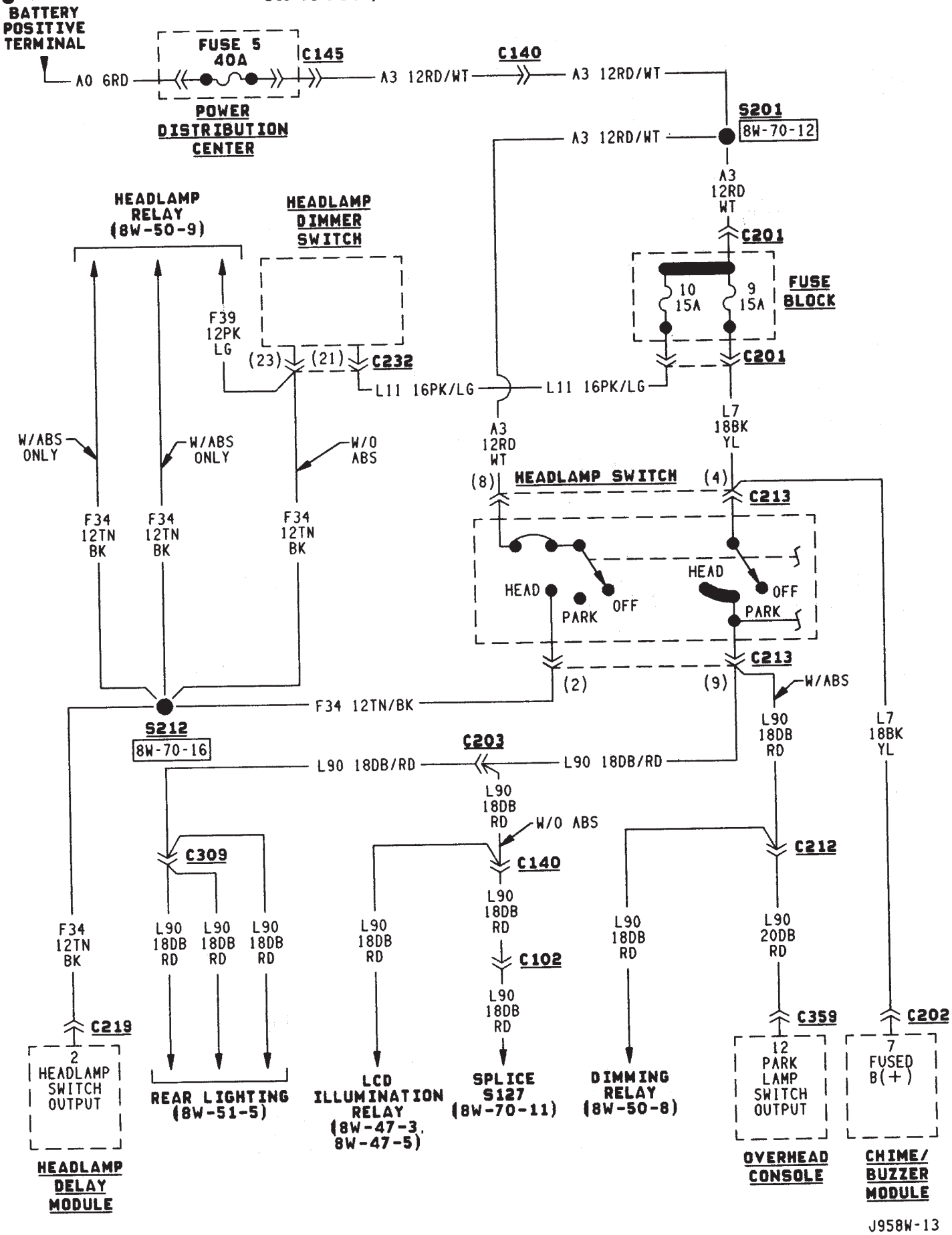
BATTERY POSITIVE TERMINAL
A0 6RD
FUSE 5 40A
C145
POWER DISTRIBUTION CENTER
A3 12RD/WT
C140
A3 12RD/WT
S201
8W-70-12
A3 12RD/WT
A3 12RD WT
C201
FUSE BLOCK
10 15A
9 15A
C201
HEADLAMP RELAY (8W-50-9)
HEADLAMP DIMMER SWITCH
F39 12PK LG
(23)
(21)
C232
L11 16PK/LG
L11 16PK/LG
L7 18BK YL
A3 12RD WT
W/ABS ONLY
W/ABS ONLY
W/O ABS
F34 12TN BK
F34 12TN BK
F34 12TN BK
(8)
HEADLAMP SWITCH
(4)
C213
HEAD
PARK
OFF
HEAD
OFF
PARK
C213
(2)
(9)
W/ABS
F34 12TN/BK
S212
8W-70-16
C203
L90 18DB/RD
L90 18DB/RD
L90 18DB RD
L90 18DB RD
W/O ABS
C212
C309
C140
F34 12TN BK
L90 18DB RD
L90 18DB RD
L90 18DB RD
L90 18DB RD
L90 18DB RD
L90 18DB RD
C102
L90 18DB RD
L90 20DB RD
C359
C202
C219
2 HEADLAMP SWITCH OUTPUT
REAR LIGHTING (8W-51-5)
LCD ILLUMINATION RELAY (8W-47-3, 8W-47-5)
SPLICE S127 (8W-70-11)
DIMMING RELAY (8W-50-8)
12 PARK LAMP SWITCH OUTPUT
7 FUSED B(+)
HEADLAMP DELAY MODULE
OVERHEAD CONSOLE
CHIME/ BUZZER MODULE
J958W-13

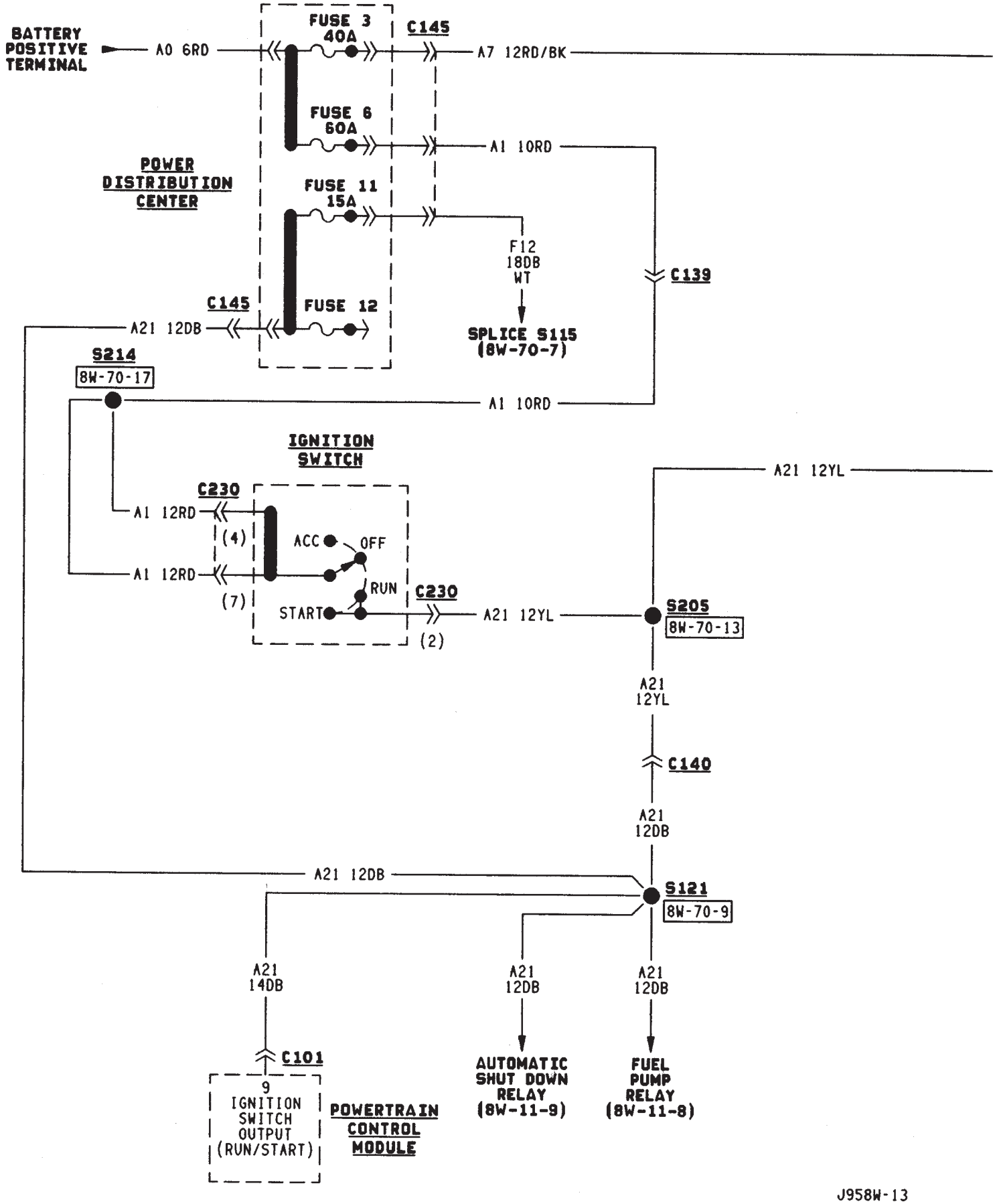
BATTERY POSITIVE TERMINAL
A0 6RD
FUSE 3 40A
C145
A7 12RD/BK
FUSE 6 60A
A1 10RD
POWER DISTRIBUTION CENTER
FUSE 11 15A
F12 18DB WT
C139
C145
FUSE 12
A21 12DB
SPLICE S115 (8W-70-7)
S214
8W-70-17
A1 10RD
IGNITION SWITCH
A21 12YL
C230
A1 12RD
(4)
ACC
OFF
A1 12RD
(7)
RUN
START
C230
A21 12YL
S205
8W-70-13
(2)
A21 12YL
C140
A21 12DB
A21 12DB
S121
8W-70-9
A21 14DB
A21 12DB
A21 12DB
C101
9
IGNITION SWITCH OUTPUT (RUN/START)
POWERTRAIN CONTROL MODULE
AUTOMATIC SHUT DOWN RELAY (8W-11-9)
FUEL PUMP RELAY (8W-11-8)

J958W-13

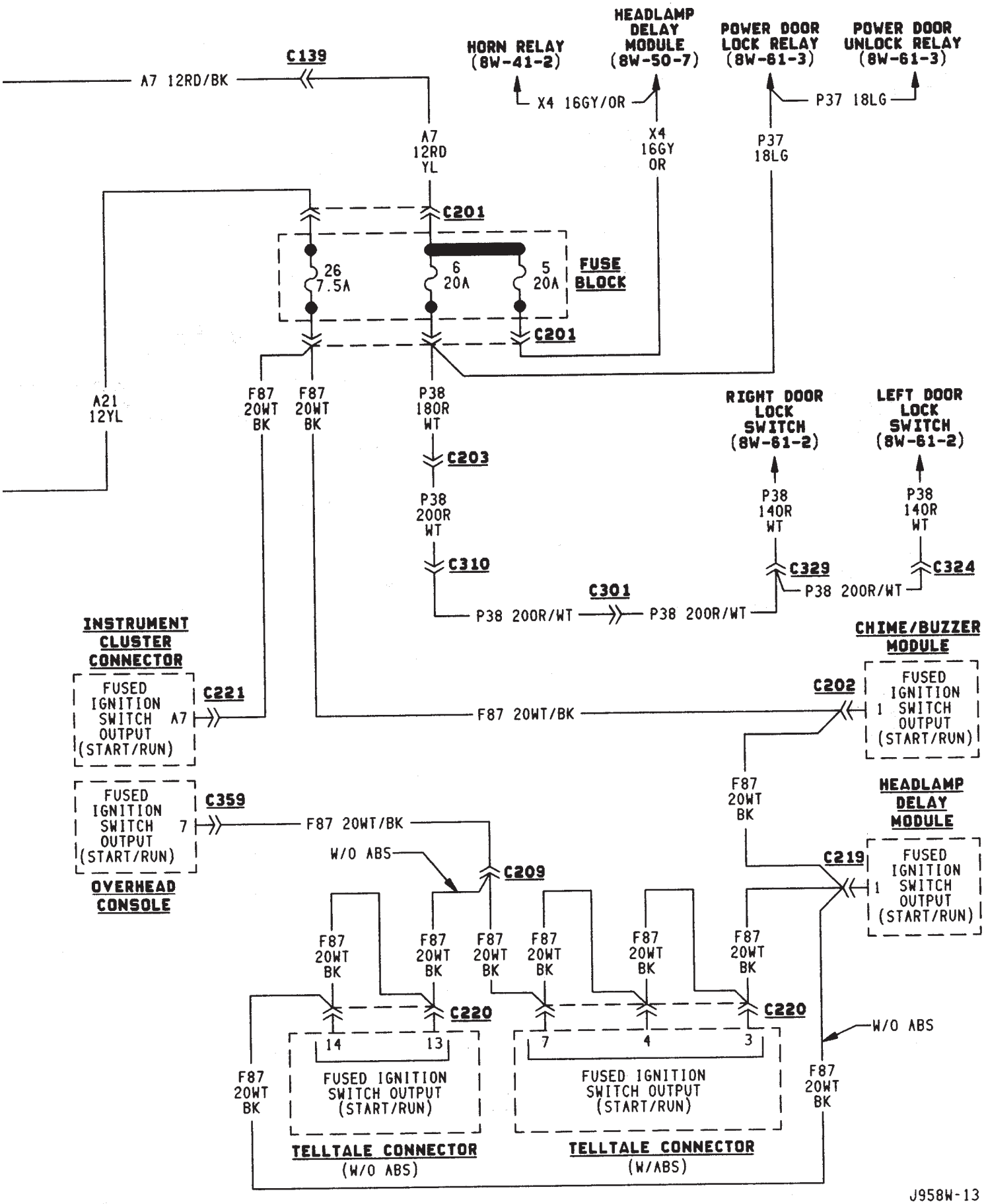
HEADLAMP DELAY MODULE (8W-50-7)
POWER DOOR LOCK RELAY (8W-61-3)
POWER DOOR UNLOCK RELAY (8W-61-3)
HORN RELAY (8W-41-2)
C139
A7 12RD/BK
X4 16GY/OR
P37 18LG
A7 12RD YL
X4 16GY OR
P37 18LG
C201
26 7.5A
6 20A
5 20A
FUSE BLOCK
C201
A21 12YL
F87 20WT BK
F87 20WT BK
P38 180R WT
C203
P38 200R WT
C310
RIGHT DOOR LOCK SWITCH (8W-61-2)
LEFT DOOR LOCK SWITCH (8W-61-2)
P38 140R WT
P38 140R WT
C329
C324
P38 200R/WT
C301
P38 200R/WT
P38 200R/WT
INSTRUMENT CLUSTER CONNECTOR
FUSED IGNITION SWITCH OUTPUT (START/RUN)
A7
C221
F87 20WT/BK
C202
CHIME/BUZZER MODULE
FUSED IGNITION SWITCH OUTPUT (START/RUN)
1
FUSED IGNITION SWITCH OUTPUT (START/RUN)
7
C359
F87 20WT/BK
OVERHEAD CONSOLE
F87 20WT BK
HEADLAMP DELAY MODULE
C219
FUSED IGNITION SWITCH OUTPUT (START/RUN)
1
W/O ABS
C209
F87 20WT BK
F87 20WT BK
F87 20WT BK
F87 20WT BK
F87 20WT BK
F87 20WT BK
C220
C220
14
13
7
4
3
W/O ABS
F87 20WT BK
FUSED IGNITION SWITCH OUTPUT (START/RUN)
FUSED IGNITION SWITCH OUTPUT (START/RUN)
F87 20WT BK
TELLTALE CONNECTOR (W/O ABS)
TELLTALE CONNECTOR (W/ABS)
J958W-13

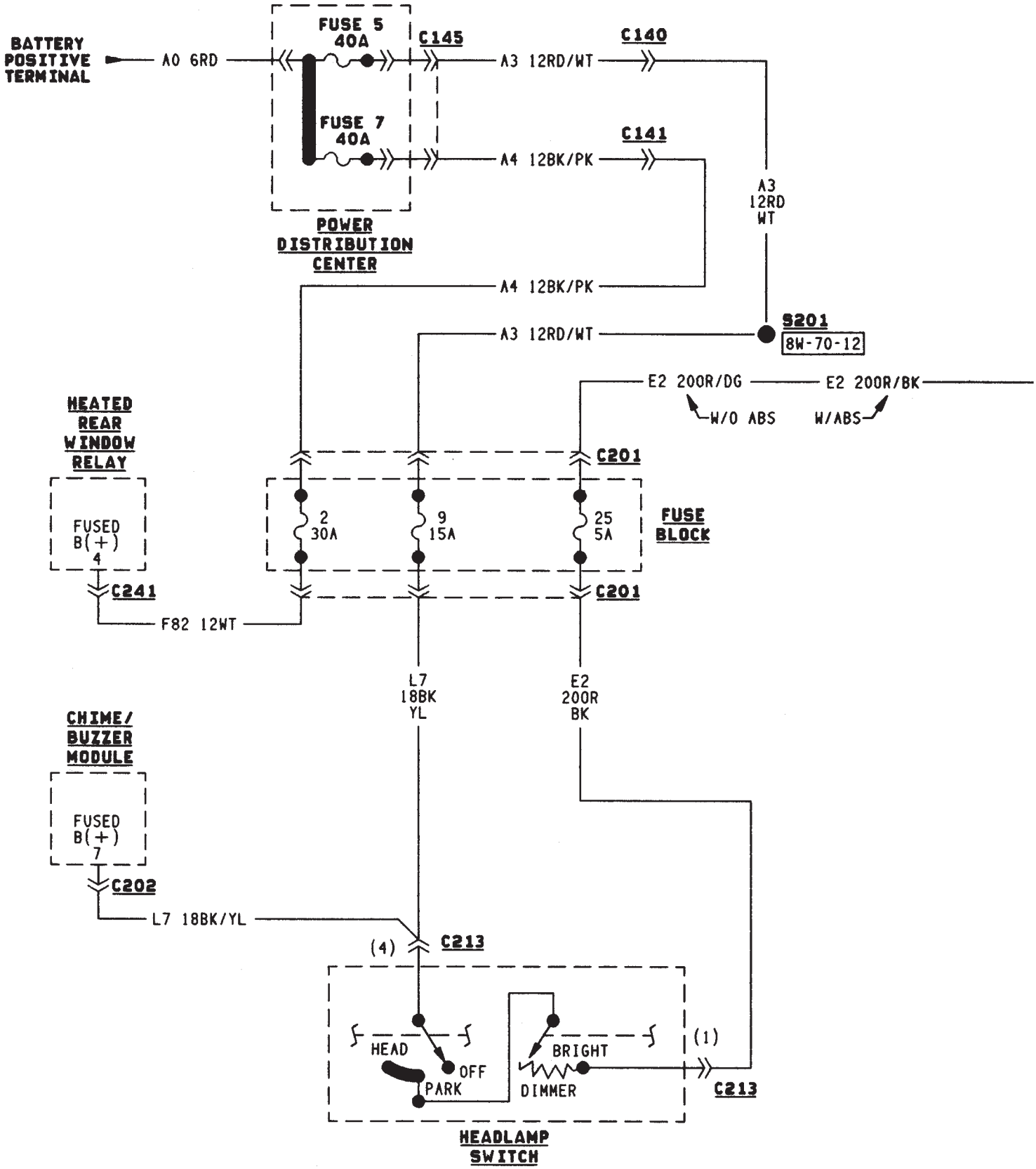
BATTERY POSITIVE TERMINAL
A0 6RD
FUSE 5 40A
FUSE 7 40A
C145
A3 12RD/WT
C140
A4 12BK/PK
C141
POWER DISTRIBUTION CENTER
A3 12RD WT
A4 12BK/PK
A3 12RD/WT
S201
8W-70-12
E2 200R/DG
E2 200R/BK
W/O ABS
W/ABS
HEATED REAR WINDOW RELAY
FUSED B(+) 4
C241
F82 12WT
C201
2 30A
9 15A
25 5A
FUSE BLOCK
C201
L7 18BK YL
E2 200R BK
CHIME/ BUZZER MODULE
FUSED B(+) 7
C202
L7 18BK/YL
(4)
C213
HEAD
OFF
PARK
BRIGHT
DIMMER
(1)
C213
HEADLAMP SWITCH

J958W-13

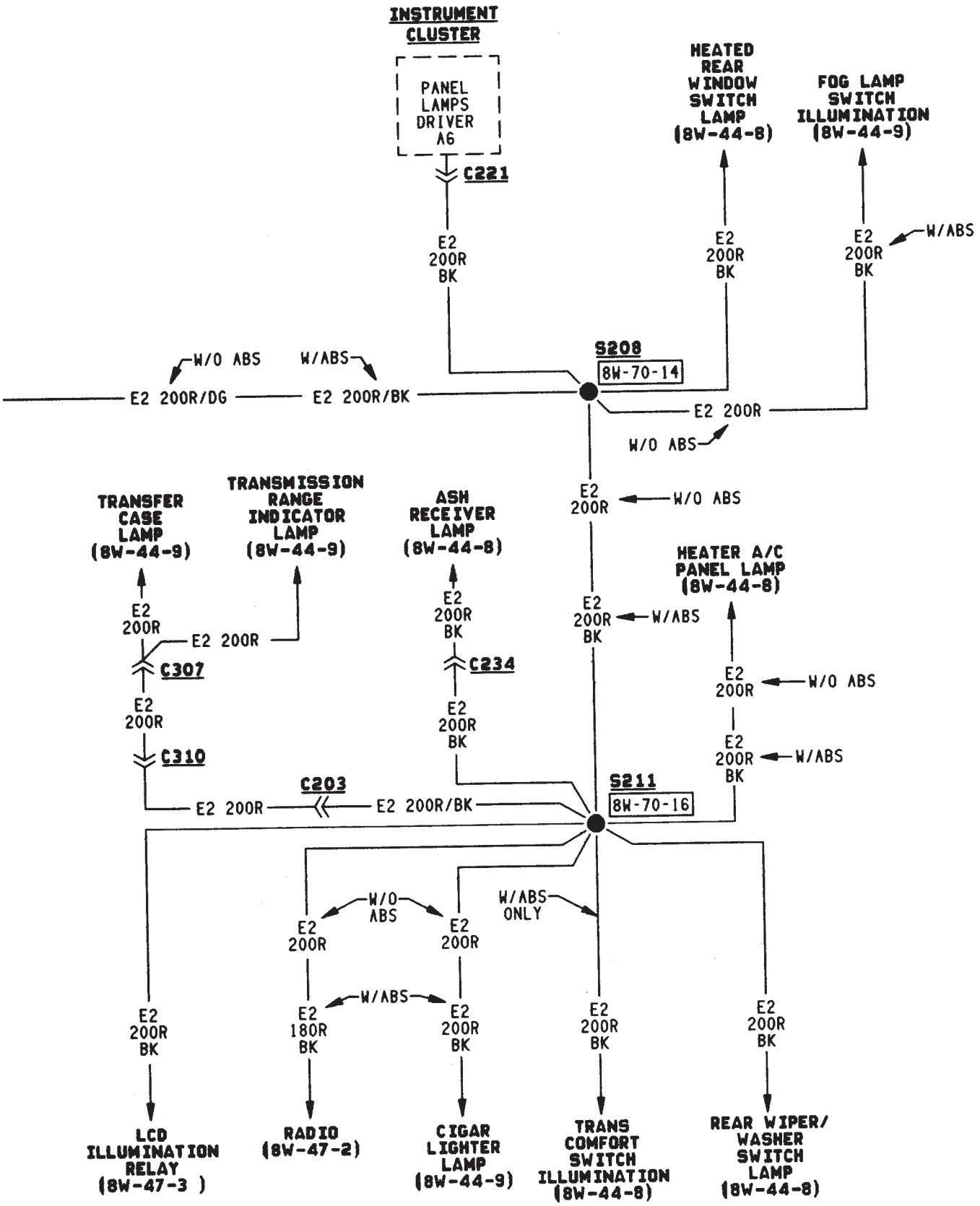
INSTRUMENT CLUSTER
PANEL LAMPS DRIVER A6
C221
E2 200R BK
HEATED REAR WINDOW SWITCH LAMP (8W-44-8)
FOG LAMP SWITCH ILLUMINATION (8W-44-9)
W/ABS
W/O ABS
W/ABS
E2 200R/DG
E2 200R/BK
S208
8W-70-14
E2 200R
W/O ABS
TRANSFER CASE LAMP (8W-44-9)
TRANSMISSION RANGE INDICATOR LAMP (8W-44-9)
ASH RECEIVER LAMP (8W-44-8)
E2 200R
W/O ABS
HEATER A/C PANEL LAMP (8W-44-8)
E2 200R
E2 200R
C307
E2 200R
C310
E2 200R BK
C234
E2 200R BK
E2 200R BK
W/ABS
E2 200R
W/O ABS
E2 200R
W/ABS
E2 200R BK
C203
E2 200R
E2 200R/BK
S211
8W-70-16
W/O ABS
W/ABS ONLY
E2 200R
E2 200R
W/ABS
E2 200R BK
E2 180R BK
E2 200R BK
E2 200R BK
E2 200R BK
LCD ILLUMINATION RELAY (8W-47-3)
RADIO (8W-47-2)
CIGAR LIGHTER LAMP (8W-44-9)
TRANS COMFORT SWITCH ILLUMINATION (8W-44-8)
REAR WIPER/ WASHER SWITCH LAMP (8W-44-8)

J958W-13

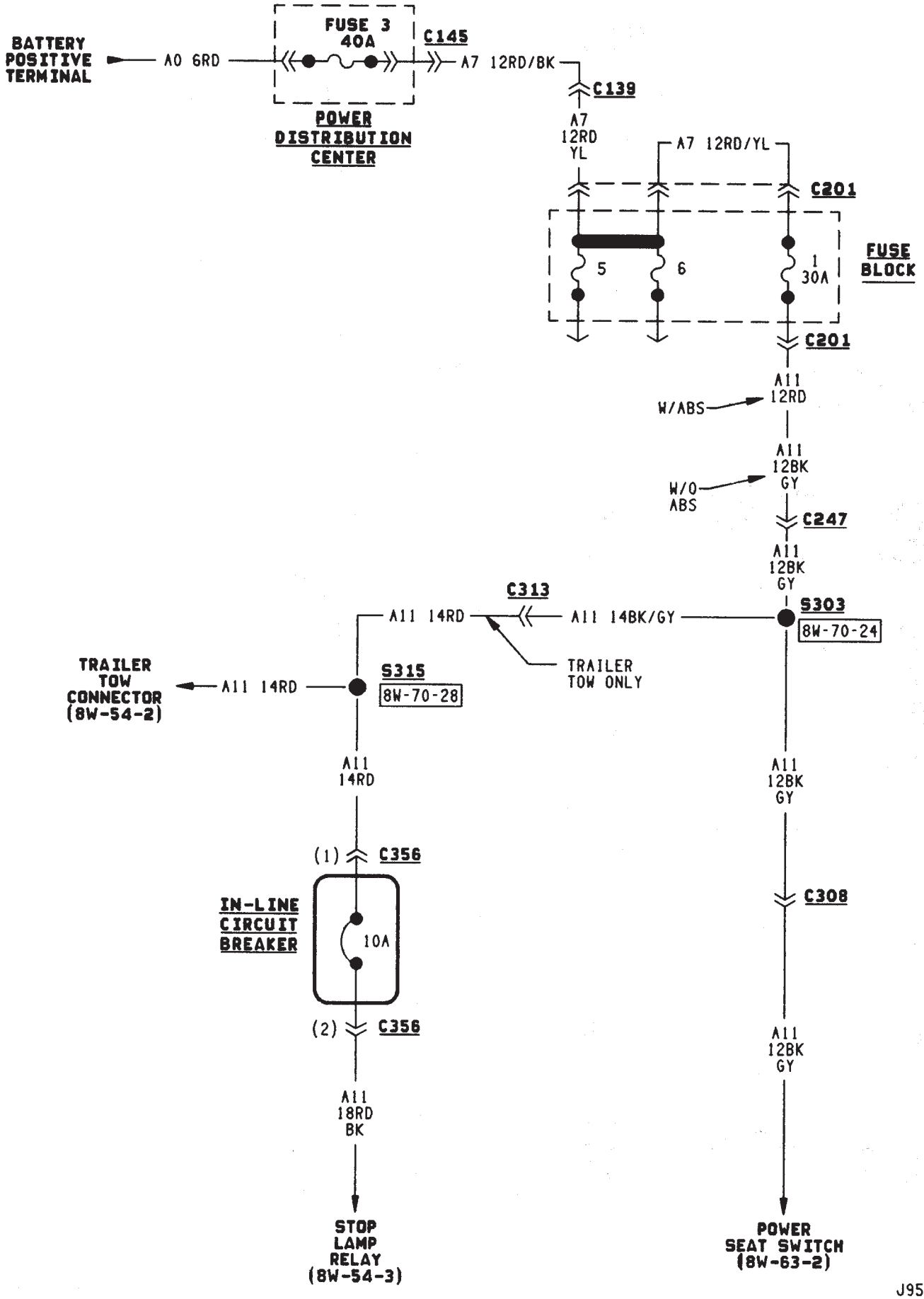
BATTERY POSITIVE TERMINAL
A0 6RD
FUSE 3 40A
C145
A7 12RD/BK
POWER DISTRIBUTION CENTER
C139
A7 12RD YL
A7 12RD/YL
C201
5
6
1 30A
FUSE BLOCK
C201
A11 12RD
W/ABS
A11 12BK GY
W/O ABS
C247
A11 12BK GY
C313
S303
8W-70-24
A11 14RD
A11 14BK/GY
TRAILER TOW ONLY
TRAILER TOW CONNECTOR (8W-54-2)
A11 14RD
S315
8W-70-28
A11 14RD
A11 12BK GY
(1) C356
IN-LINE CIRCUIT BREAKER
10A
C308
(2) C356
A11 12BK GY
A11 18RD BK
STOP LAMP RELAY (8W-54-3)
POWER SEAT SWITCH (8W-63-2)
J958W-13

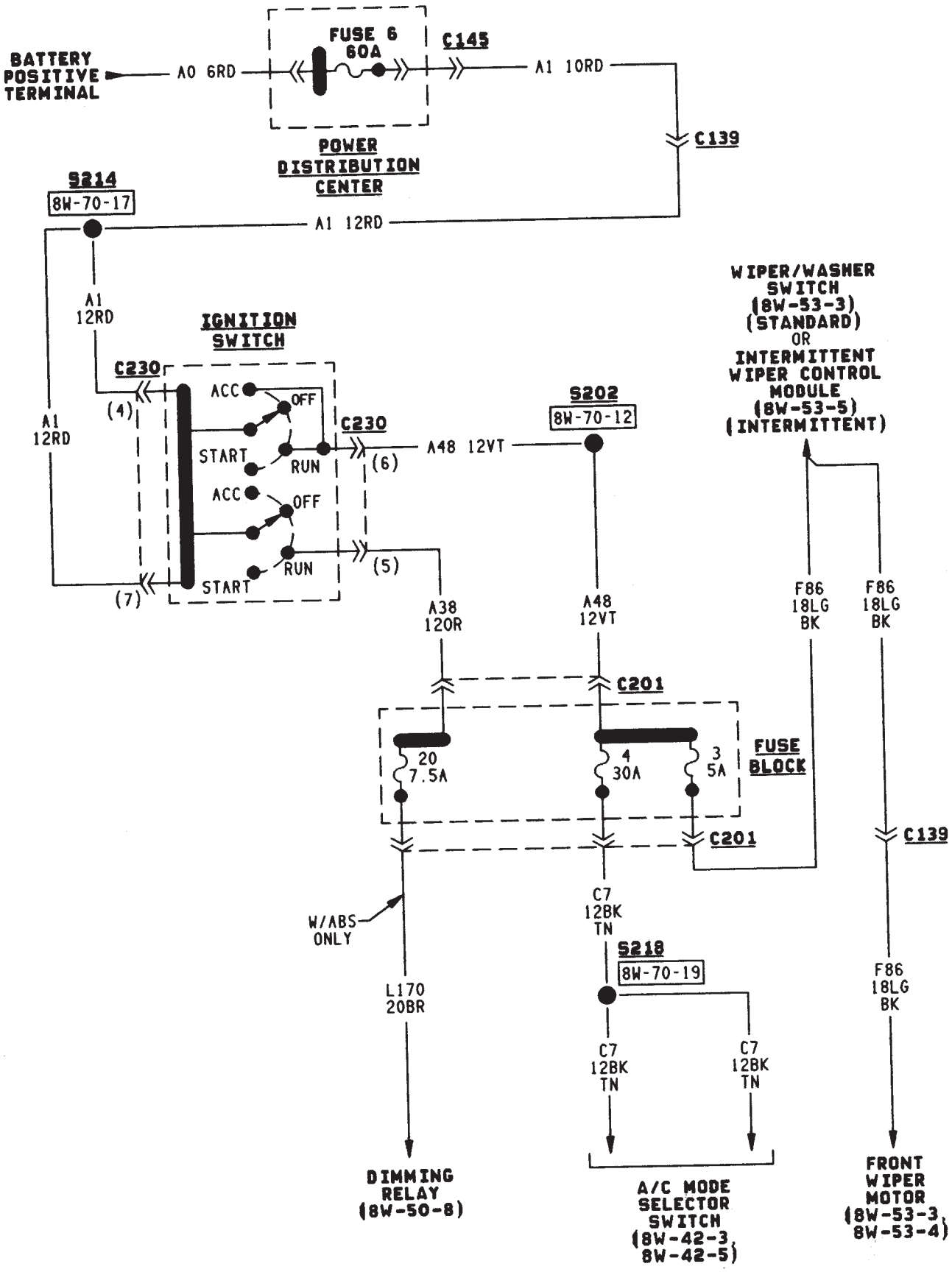
BATTERY POSITIVE TERMINAL
A0 6RD
FUSE 6 60A
C145
A1 10RD
C139
POWER DISTRIBUTION CENTER
S214
8W-70-17
A1 12RD
A1 12RD
IGNITION SWITCH
C230
ACC
OFF
START
RUN
ACC
OFF
RUN
START
(4)
(6)
(5)
(7)
C230
A48 12VT
S202
8W-70-12
WIPER/WASHER SWITCH (8W-53-3) (STANDARD) OR INTERMITTENT WIPER CONTROL MODULE (8W-53-5) (INTERMITTENT)
A1 12RD
A38 12OR
A48 12VT
F86 18LG BK
F86 18LG BK
C201
20 7.5A
4 30A
3 5A
FUSE BLOCK
C201
C139
W/ABS ONLY
L170 20BR
C7 12BK TN
S218
8W-70-19
F86 18LG BK
C7 12BK TN
C7 12BK TN
DIMMING RELAY (8W-50-8)
A/C MODE SELECTOR SWITCH (8W-42-3, 8W-42-5)
FRONT WIPER MOTOR (8W-53-3, 8W-53-4)

J958W-13

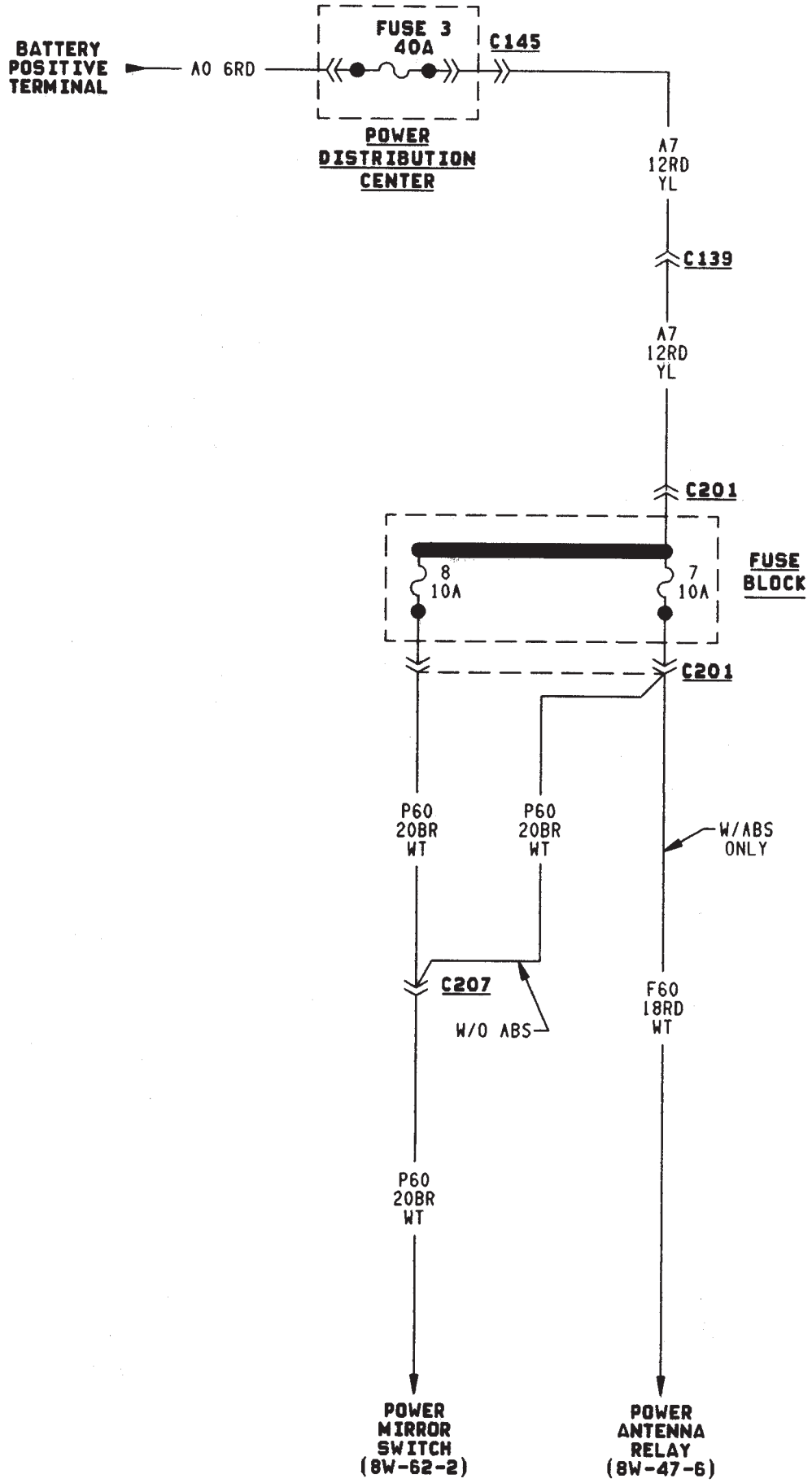
BATTERY POSITIVE TERMINAL
A0 6RD
FUSE 3 40A
C145
POWER DISTRIBUTION CENTER
A7 12RD YL
C139
A7 12RD YL
C201
8 10A
7 10A
FUSE BLOCK
C201
P60 20BR WT
P60 20BR WT
W/ABS ONLY
C207
W/O ABS
F60 18RD WT
P60 20BR WT
POWER MIRROR SWITCH (8W-62-2)
POWER ANTENNA RELAY (8W-47-6)

J958W-13

POWER DISTRIBUTION

GENERAL INFORMATION

This section covers the Power Distribution Center (PDC) and all circuits involved with it. For additional information on system operation, refer to the appropriate section of the wiring diagrams.

DIAGRAM INDEX

Component	Page
A/C Compressor Clutch Relay	8W-11-3, 11
ABS Control Module	8W-11-6, 7
ABS Power Relay	8W-11-3, 6
ABS Pump Motor Relay	8W-11-3, 7
Automatic Shut Down Relay	8W-11-3, 9
Chime/Buzzer Module	8W-11-5, 10
Dimming Relay	8W-11-16
Engine Starter Motor Relay	8W-11-3, 4
Fuel Pump Relay	8W-11-3, 8
Fuse 1 (Fuse Block)	8W-11-13
Fuse 1 (PDC)	8W-11-13
Fuse 2 (Fuse Block)	8W-11-4
Fuse 2 (PDC)	8W-11-8
Fuse 3 (PDC)	8W-11-12
Fuse 4 (PDC)	8W-11-14
Fuse 5 (PDC)	8W-11-5
Fuse 6 (PDC)	8W-11-4, 7, 10, 14
Fuse 7 (PDC)	8W-11-4
Fuse 8 (Fuse Block)	8W-11-7
Fuse 8 (PDC)	8W-11-7
Fuse 9 (Fuse Block)	8W-11-5
Fuse 9 (PDC)	8W-11-13
Fuse 10 (Fuse Block)	8W-11-5
Fuse 11 (PDC)	8W-11-10
Fuse 12 (PDC)	8W-11-14
Fuse 13 (PDC)	8W-11-4
Fuse 14 (PDC)	8W-11-8
Fuse 15 (PDC)	8W-11-8
Fuse 16 (PDC)	8W-11-12
Fuse 26 (Fuse Block)	8W-11-10
Headlamp Delay Module	8W-11-10
Headlamp Delay Relay	8W-11-5
Headlamp Relay	8W-11-16
Headlamp Switch	8W-11-5
Heated Rear Window Relay	8W-11-17
Horn Relay	8W-11-16
Ignition Switch	8W-11-4, 7, 14
In-Line Circuit Breaker (Stop Lamp Relay)	8W-11-13
LCD Illumination Relay	8W-11-16
Overhead Console	8W-11-5, 10
Power Antenna Relay	8W-11-17
Power Distribution Center	8W-11-2
Power Door Unlock Relay	8W-11-15
Power Door Lock Relay	8W-11-15
Powertrain Control Module	8W-11-4, 8, 9, 11
Radiator Fan Control Relay	8W-11-3, 11
Relay Center	8W-11-15
Telltale Connector (Instrument Cluster)	8W-11-6, 10
Transmission Control Module	8W-11-8, 14
Turn Signal Relay	8W-11-17

C145

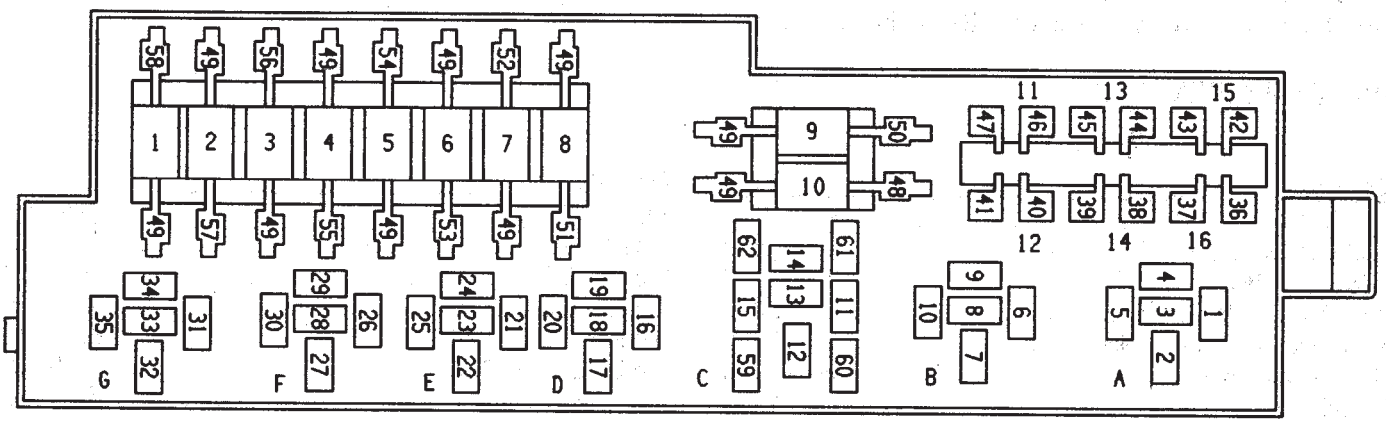

POWER DISTRIBUTION CENTER

FUSE	FUSED CIRCUIT	FEED CIRCUIT	AMPS	SHEET
1	A11 10BK/GY	A0 6RD	60	8W-11-13
2	A14 14RD/WT (2)		30	8W-11-8
3	A7 12RD/BK (2)		40	8W-11-12
4	L9 18BK/WT		20	8W-11-14
5	A3 12RD/WT		40	8W-11-5
6	A1 10RD		60	8W-11-4 8W-11-7 8W-11-10 8W-11-14
7	A4 12BK/PK (2)		40	8W-11-4
8	A10 12RD/DG		40	8W-11-7
9	A11 10BK/GY		60	8W-11-13
10	A20 14RD/DB		30	8W-11-6
11	F12 18DB/WT	A21 12DB	15	8W-11-10
12	T17 18YL (2)		10	8W-11-14
13	F39 18PK/LG (2)	A4 14BK/PK	15	8W-11-4
14	A18 18RD/BK	A14 14RD/WT	20	8W-11-8
15	F141 16LG/RD	A14 14RD/WT	20	8W-11-8
16	A7 14RD/BK A7 18RD/BK	A7 12RD/BK	20	8W-11-12

(2)-TWO WIRES

J958W-13

A
RADIATOR FAN
CONTROL RELAY

CAV	CIRCUIT	FUNCTION	SHEET
1	F12 18DB/WT	FUSED IGNITION SWITCH OUTPUT	8W-11-11
2	F141 16LG/RD	FUSED B(+)	8W-11-11
4	C25 16LG	RADIATOR FAN RELAY OUTPUT	8W-11-11
5	C27 20DB/PK	RADIATOR FAN RELAY CONTROL	8W-11-11

B
FUEL PUMP
RELAY

CAV	CIRCUIT	FUNCTION	SHEET
6	A21 12DB	IGNITION SWITCH OUTPUT (RUN/START)	8W-11-8
7	A14 14RD/WT	FUSED B(+)	8W-11-8
9	A141 14DG/WT	FUEL PUMP RELAY OUTPUT	8W-11-8
9	A141 14DG/WT	FUEL PUMP RELAY OUTPUT	8W-11-8
10	K51 20DB/YL	ASD RELAY CONTROL	8W-11-8
10	K51 20DB/YL	ASD RELAY CONTROL	8W-11-8

C
ABS PUMP
MOTOR RELAY

CAV	CIRCUIT	FUNCTION	SHEET
11	B116 18GY	ABS PUMP MOTOR RELAY CONTROL	8W-11-7
12	A10 12RD/DG	FUSED B(+)	8W-11-7
14	B233 12TN/BK	ABS PUMP/MOTOR RELAY OUTPUT	8W-11-7
15	B235 14GY/YL	ABS POWER RELAY OUTPUT	8W-11-7
60	Z12 14BK/TN	GROUND	8W-11-7

D
A/C COMPRESSOR
CLUTCH RELAY

CAV	CIRCUIT	FUNCTION	SHEET
16	F12 18DB/WT	FUSED IGNITION SWITCH OUTPUT	8W-11-11
17	C90 16LG	A/C PRESSURE SWITCH OUTPUT	8W-11-11
19	C3 14DB/BK	A/C CMP CLUTCH RELAY OUTPUT	8W-11-11
20	C13 20DB/OR	A/C CMP CLUTCH RELAY CONTROL	8W-11-11

E
AUTOMATIC SHUT
DOWN RELAY

CAV	CIRCUIT	FUNCTION	SHEET
21	A21 12DB	IGNITION SWITCH OUTPUT (RUN/START)	8W-11-9
22	A18 18RD/BK	FUSED B(+)	8W-11-9
24	A142 14DG/OR	ASD RELAY OUTPUT	8W-11-9
25	K51 20DB/YL	ASD RELAY CONTROL	8W-11-9

F
ENGINE STARTER
RELAY

CAV	CIRCUIT	FUNCTION	SHEET
26	A41 14YL	IGNITION SWITCH OUTPUT (START)	8W-11-4
27	A4 14BK/PK	FUSED B(+)	8W-11-4
27	A4 14BK/PK	FUSED B(+)	8W-11-4
29	T40 14BR	ENGINE STARTER MOTOR RELAY OUTPUT	8W-11-4
30	T41 18BR/YL	PARK/NEUTRAL POSITION SWITCH SENSE	8W-11-4
30	T41 18BR/YL	PARK/NEUTRAL POSITION SWITCH SENSE	8W-11-4

G
ABS POWER
RELAY

CAV	CIRCUIT	FUNCTION	SHEET
31	B236 18LG/YL	FUSED IGNITION SWITCH OUTPUT	8W-11-6
32	B235 14GY/YL	ABS POWER RELAY OUTPUT	8W-11-6
32	B235 14GY/YL	ABS POWER RELAY OUTPUT	8W-11-6
33	Z12 12BK/TN	GROUND	8W-11-6
34	A20 14RD/DB	FUSED B(+)	8W-11-6
35	B207 18PK	ABS POWER RELAY CONTROL	8W-11-6

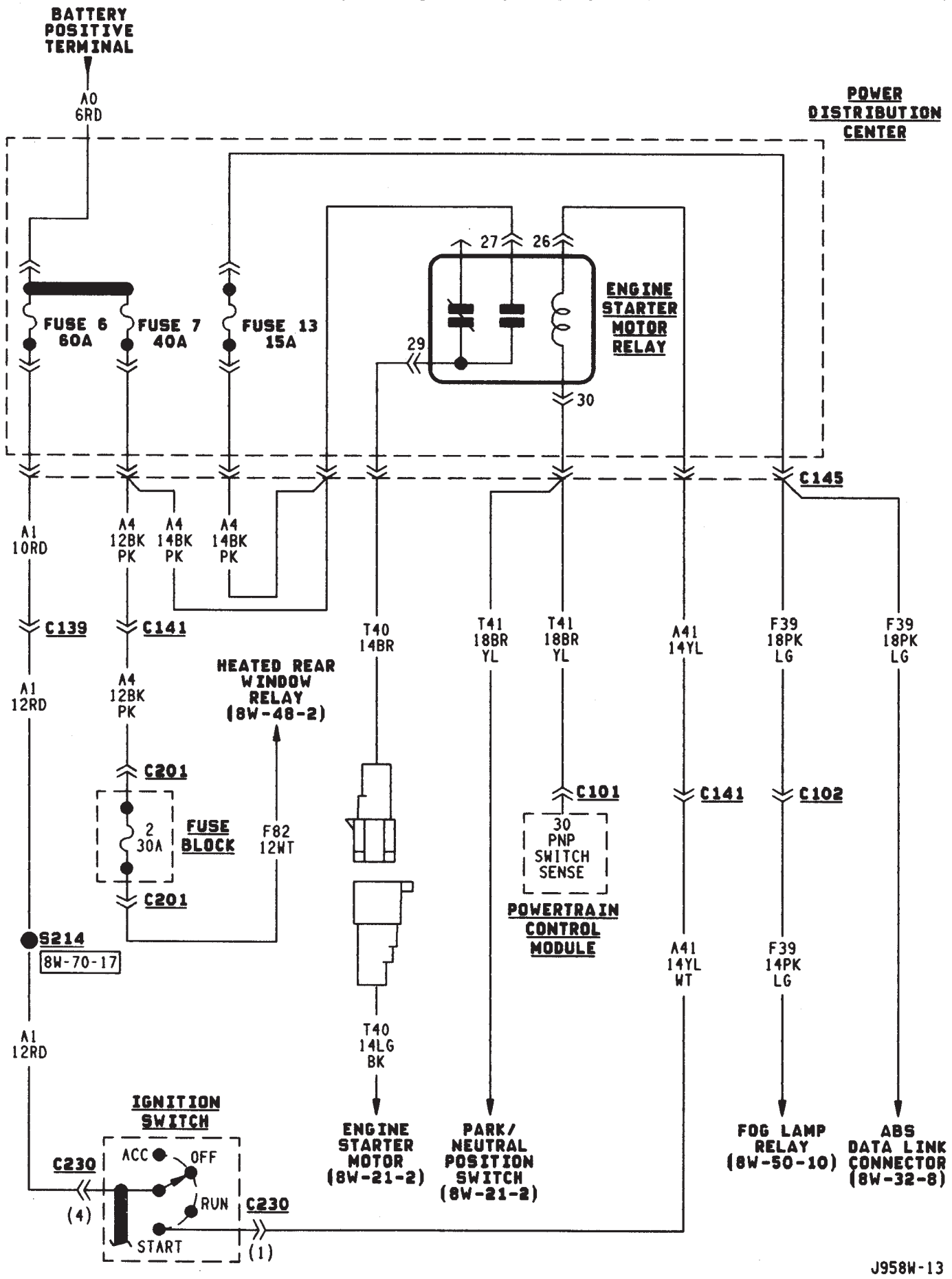
BATTERY POSITIVE TERMINAL
A0 6RD
POWER DISTRIBUTION CENTER
FUSE 6 60A
FUSE 7 40A
FUSE 13 15A
27
26
29
30
ENGINE STARTER MOTOR RELAY
C145
A1 10RD
A4 12BK PK
A4 14BK PK
A4 14BK PK
C139
C141
A1 12RD
A4 12BK PK
HEATED REAR WINDOW RELAY (8W-48-2)
C201
2 30A
FUSE BLOCK
F82 12WT
C201
S214
8W-70-17
A1 12RD
T40 14BR
T40 14LG BK
T41 18BR YL
T41 18BR YL
C101
30 PNP SWITCH SENSE
POWERTRAIN CONTROL MODULE
A41 14YL
C141
A41 14YL WT
F39 18PK LG
C102
F39 14PK LG
F39 18PK LG
IGNITION SWITCH
C230
ACC
OFF
RUN
START
(4)
C230
(1)
ENGINE STARTER MOTOR (8W-21-2)
PARK/ NEUTRAL POSITION SWITCH (8W-21-2)
FOG LAMP RELAY (8W-50-10)
ABS DATA LINK CONNECTOR (8W-32-8)
J958W-13

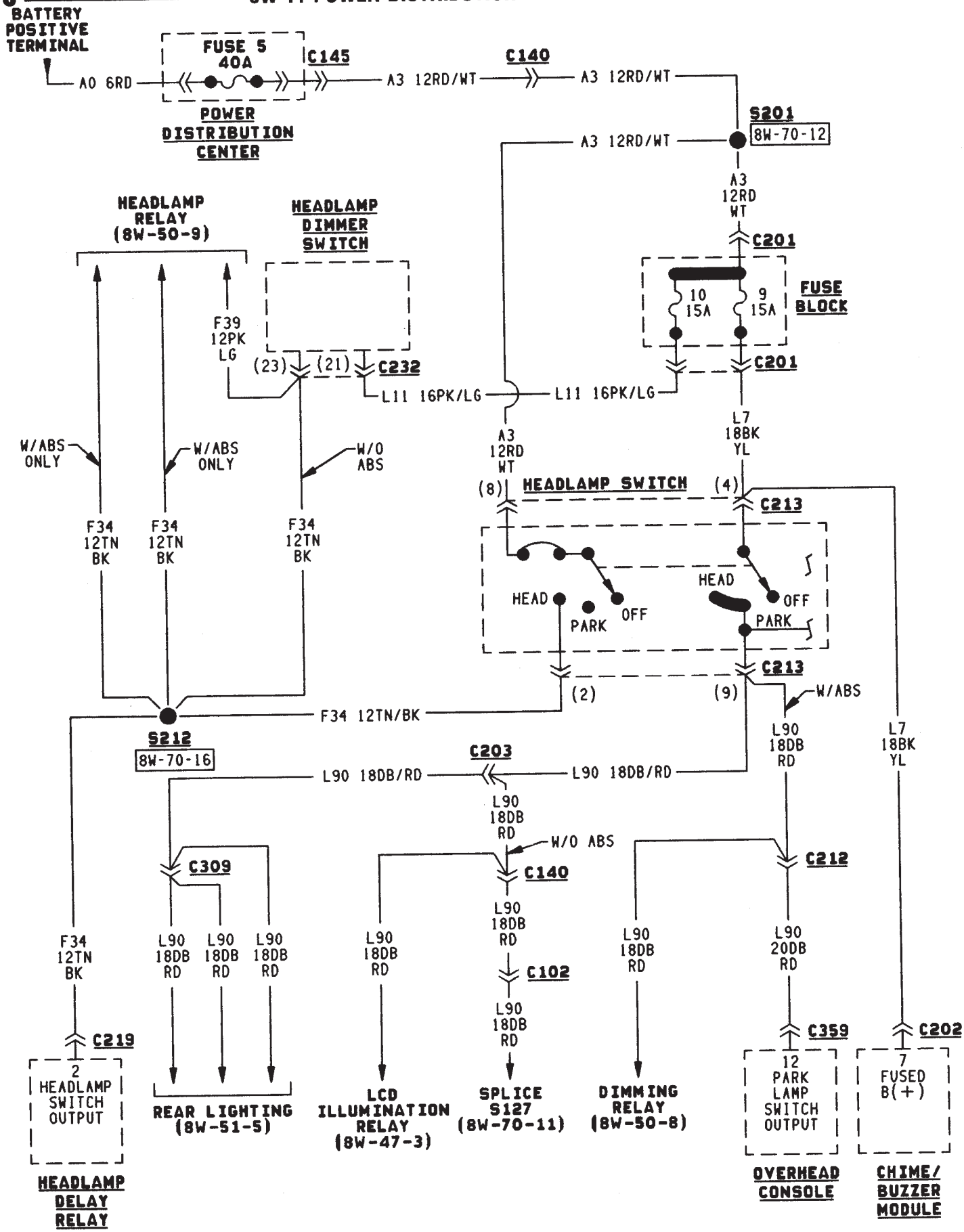
BATTERY POSITIVE TERMINAL
A0 6RD
FUSE 5 40A
C145
POWER DISTRIBUTION CENTER
A3 12RD/WT
C140
A3 12RD/WT
S201
8W-70-12
A3 12RD/WT
C201
FUSE BLOCK
10 15A
9 15A
C201
HEADLAMP RELAY (8W-50-9)
HEADLAMP DIMMER SWITCH
F39 12PK LG
(23)
(21)
C232
L11 16PK/LG
L11 16PK/LG
A3 12RD WT
L7 18BK YL
W/ABS ONLY
W/ABS ONLY
W/O ABS
F34 12TN BK
F34 12TN BK
F34 12TN BK
(8)
HEADLAMP SWITCH
(4)
C213
HEAD
PARK
OFF
HEAD
OFF
PARK
C213
(2)
(9)
W/ABS
F34 12TN/BK
S212
8W-70-16
C203
L90 18DB/RD
L90 18DB/RD
L90 18DB RD
L90 18DB RD
W/O ABS
C309
C140
C212
F34 12TN BK
L90 18DB RD
L90 18DB RD
L90 18DB RD
L90 18DB RD
L90 18DB RD
C102
L90 18DB RD
L90 18DB RD
L90 20DB RD
C359
C202
C219
2 HEADLAMP SWITCH OUTPUT
REAR LIGHTING (8W-51-5)
LCD ILLUMINATION RELAY (8W-47-3)
SPLICE S127 (8W-70-11)
DIMMING RELAY (8W-50-8)
12 PARK LAMP SWITCH OUTPUT
7 FUSED B(+)
HEADLAMP DELAY RELAY
OVERHEAD CONSOLE
CHIME/ BUZZER MODULE
J958W-13

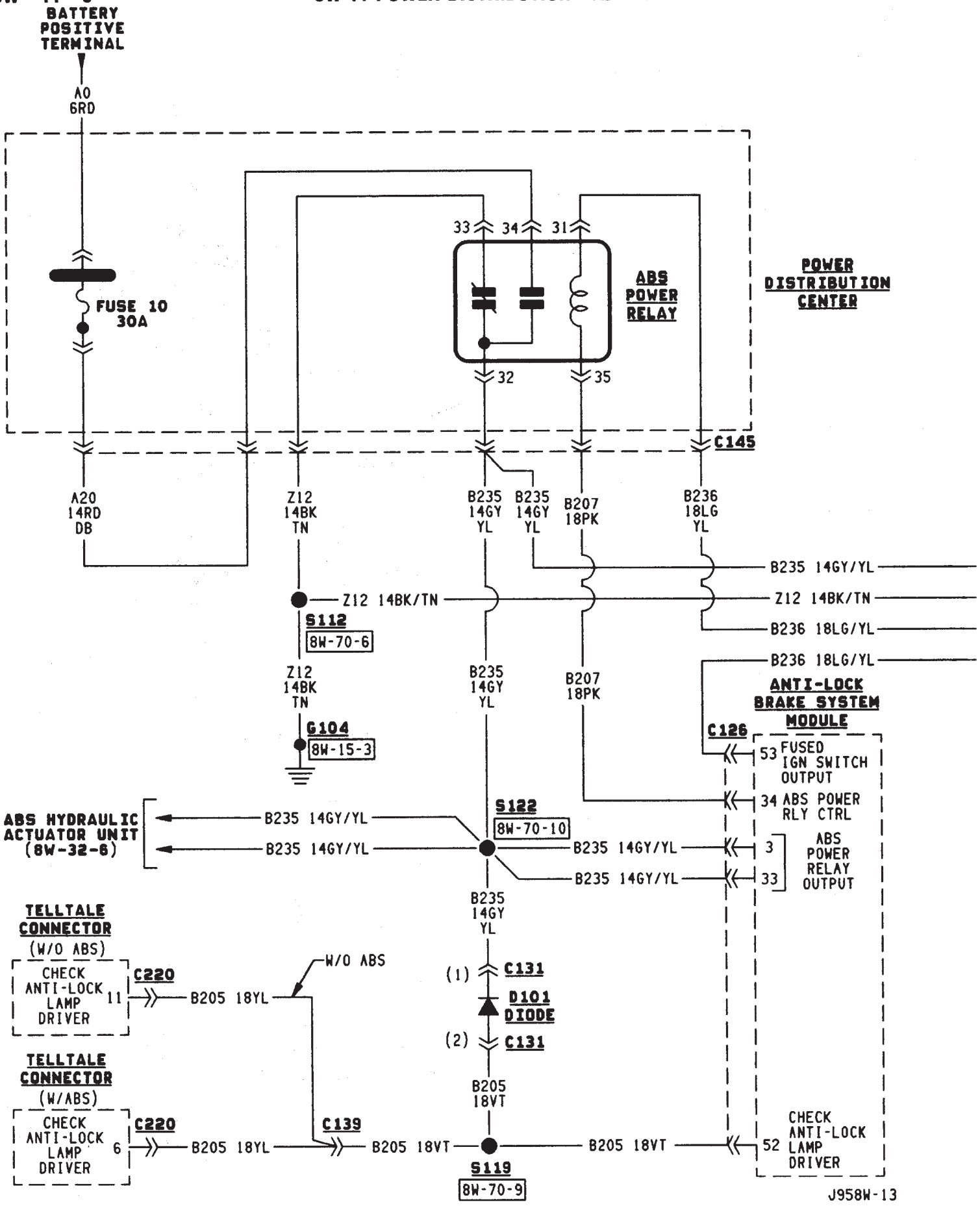
BATTERY POSITIVE TERMINAL
A0 6RD
FUSE 10 30A
33
34
31
ABS POWER RELAY
32
35
POWER DISTRIBUTION CENTER
C145
A20 14RD DB
Z12 14BK TN
B235 14GY YL
B235 14GY YL
B207 18PK
B236 18LG YL
B235 14GY/YL
Z12 14BK/TN
B236 18LG/YL
S112
8W-70-6
Z12 14BK TN
G104
8W-15-3
B235 14GY YL
B207 18PK
B236 18LG/YL
ANTI-LOCK BRAKE SYSTEM MODULE
C126
53 FUSED IGN SWITCH OUTPUT
34 ABS POWER RLY CTRL
3
33
ABS POWER RELAY OUTPUT
ABS HYDRAULIC ACTUATOR UNIT (8W-32-6)
B235 14GY/YL
B235 14GY/YL
S122
8W-70-10
B235 14GY/YL
B235 14GY/YL
B235 14GY YL
TELLTALE CONNECTOR (W/O ABS)
CHECK ANTI-LOCK LAMP DRIVER
11
C220
B205 18YL
W/O ABS
(1)
C131
D101 DIODE
(2)
C131
B205 18VT
TELLTALE CONNECTOR (W/ABS)
CHECK ANTI-LOCK LAMP DRIVER
6
C220
B205 18YL
C139
B205 18VT
B205 18VT
52 CHECK ANTI-LOCK LAMP DRIVER
S119
8W-70-9
J958W-13

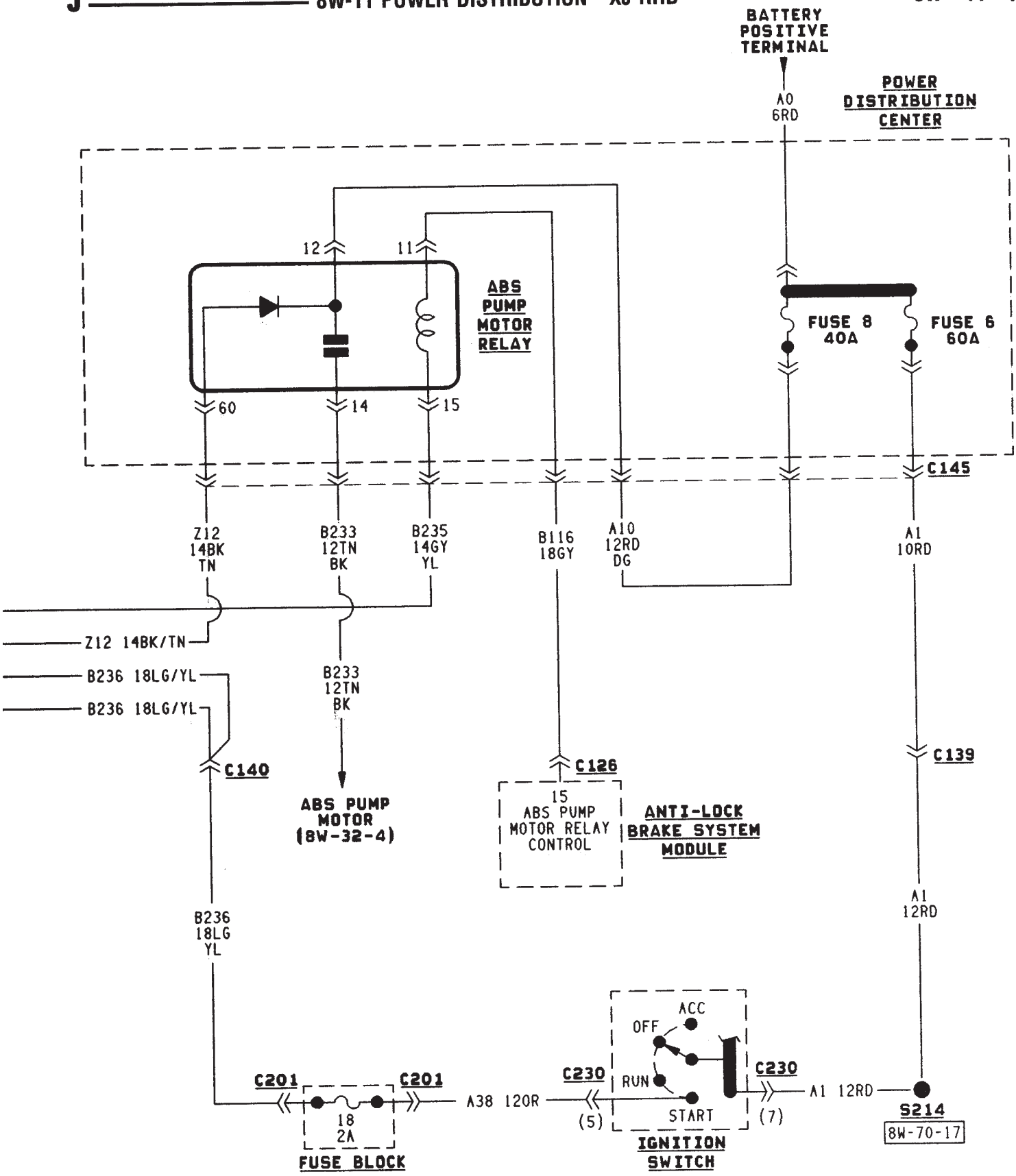
BATTERY POSITIVE TERMINAL
A0 6RD
POWER DISTRIBUTION CENTER
12
11
ABS PUMP MOTOR RELAY
60
14
15
FUSE 8 40A
FUSE 6 60A
C145
Z12 14BK TN
B233 12TN BK
B235 14GY YL
B116 18GY
A10 12RD DG
A1 10RD
Z12 14BK/TN
B236 18LG/YL
B236 18LG/YL
B233 12TN BK
C140
C126
C139
ABS PUMP MOTOR (8W-32-4)
15 ABS PUMP MOTOR RELAY CONTROL
ANTI-LOCK BRAKE SYSTEM MODULE
B236 18LG YL
A1 12RD
ACC
OFF
RUN
START
C230
C230
C201
C201
A38 12OR
(5)
(7)
A1 12RD
S214
8W-70-17
18 2A
FUSE BLOCK
IGNITION SWITCH

J958W-13

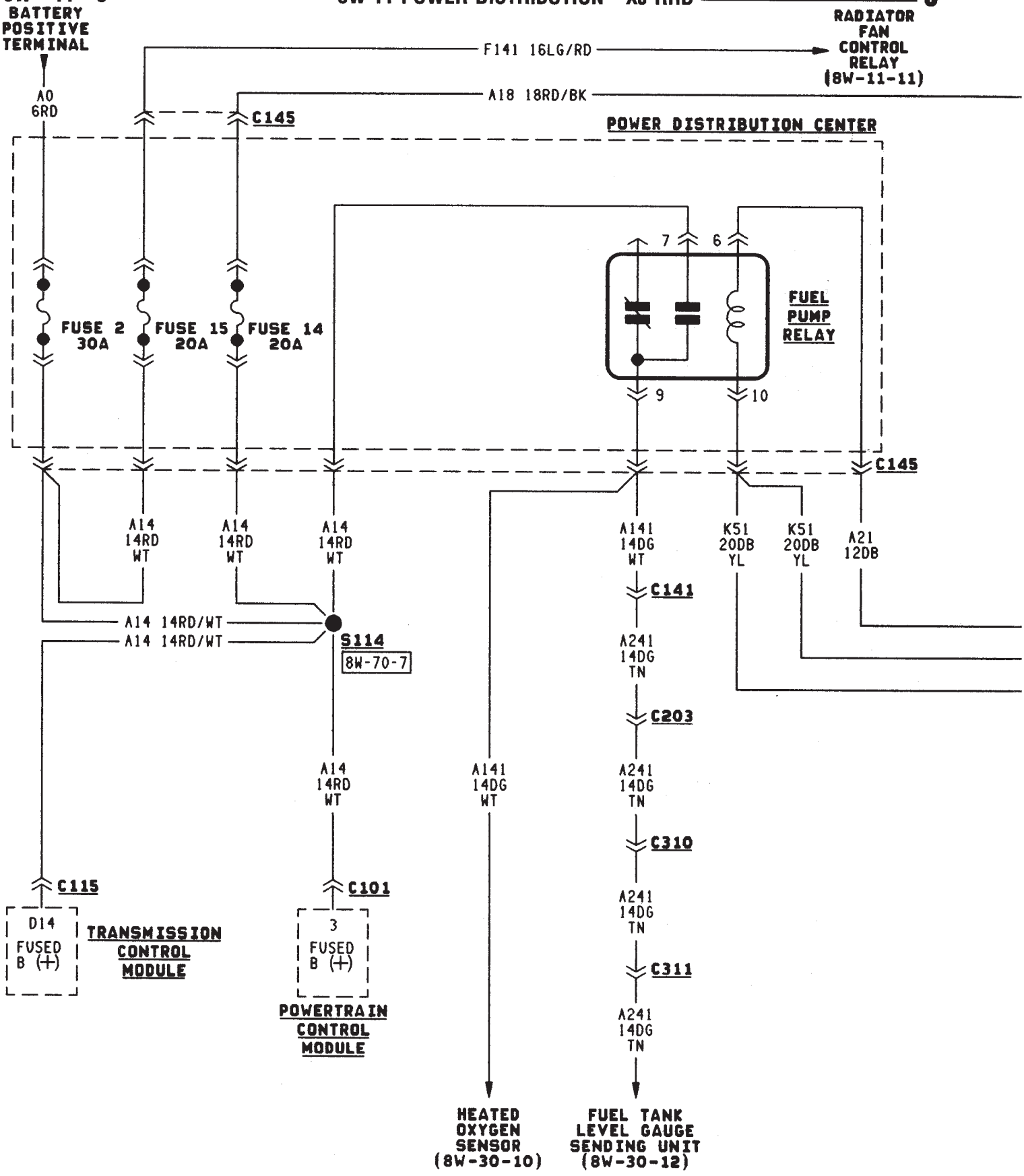
BATTERY POSITIVE TERMINAL
A0 6RD
F141 16LG/RD
RADIATOR FAN CONTROL RELAY (8W-11-11)
A18 18RD/BK
C145
POWER DISTRIBUTION CENTER
FUSE 2 30A
FUSE 15 20A
FUSE 14 20A
7
6
FUEL PUMP RELAY
9
10
C145
A14 14RD WT
A14 14RD WT
A14 14RD WT
A141 14DG WT
K51 20DB YL
K51 20DB YL
A21 12DB
C141
A14 14RD/WT
A14 14RD/WT
S114
8W-70-7
A241 14DG TN
C203
A14 14RD WT
A141 14DG WT
A241 14DG TN
C310
A241 14DG TN
C311
A241 14DG TN
C115
C101
D14 FUSED B (+)
TRANSMISSION CONTROL MODULE
3 FUSED B (+)
POWERTRAIN CONTROL MODULE
HEATED OXYGEN SENSOR (8W-30-10)
FUEL TANK LEVEL GAUGE SENDING UNIT (8W-30-12)

J958W-13

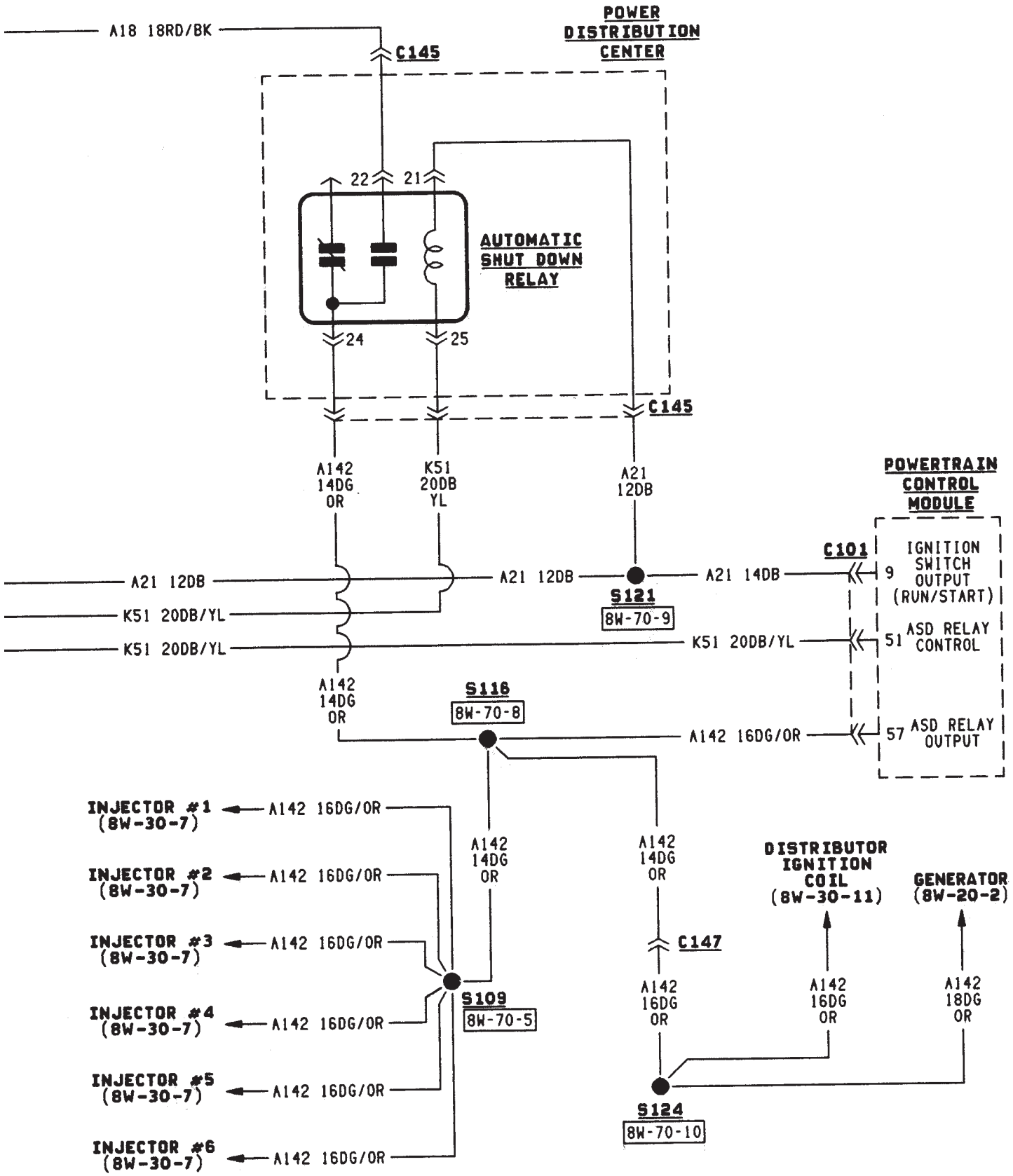
A18 18RD/BK
C145
POWER DISTRIBUTION CENTER
22
21
AUTOMATIC SHUT DOWN RELAY
24
25
C145
A142 14DG OR
K51 20DB YL
A21 12DB
POWERTRAIN CONTROL MODULE
C101
IGNITION SWITCH OUTPUT (RUN/START)
9
A21 12DB
A21 12DB
A21 14DB
S121
8W-70-9
K51 20DB/YL
ASD RELAY CONTROL
51
K51 20DB/YL
K51 20DB/YL
A142 14DG OR
S116
8W-70-8
A142 16DG/OR
57
ASD RELAY OUTPUT
INJECTOR #1 (8W-30-7)
A142 16DG/OR
INJECTOR #2 (8W-30-7)
A142 16DG/OR
INJECTOR #3 (8W-30-7)
A142 16DG/OR
INJECTOR #4 (8W-30-7)
A142 16DG/OR
INJECTOR #5 (8W-30-7)
A142 16DG/OR
INJECTOR #6 (8W-30-7)
A142 16DG/OR
A142 14DG OR
A142 14DG OR
S109
8W-70-5
C147
A142 16DG OR
DISTRIBUTOR IGNITION COIL (8W-30-11)
A142 16DG OR
GENERATOR (8W-20-2)
A142 18DG OR
S124
8W-70-10

J958W-13

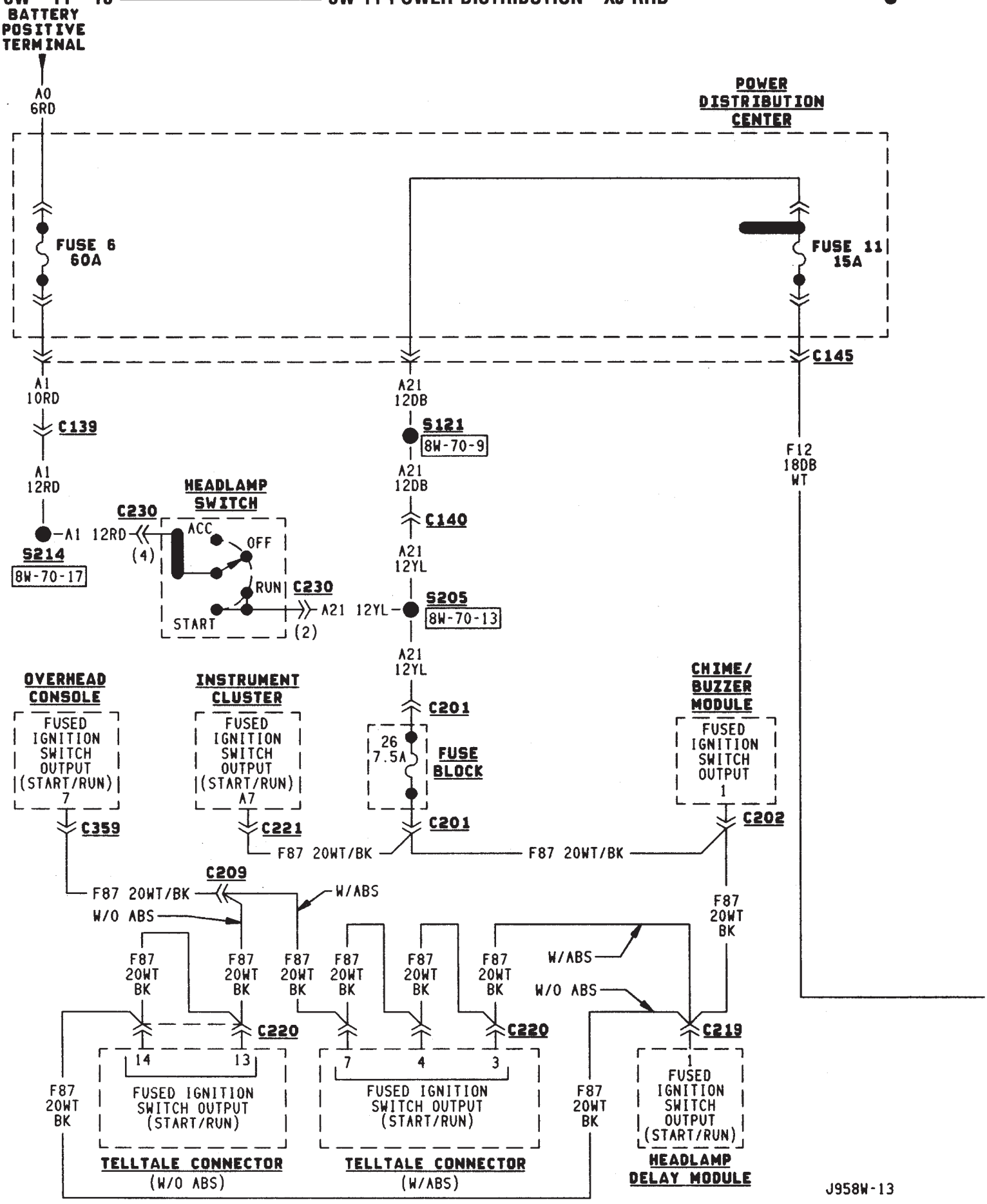
BATTERY POSITIVE TERMINAL
A0 6RD
POWER DISTRIBUTION CENTER
FUSE 6 60A
FUSE 11 15A
C145
A1 10RD
C139
A1 12RD
S214
8W-70-17
HEADLAMP SWITCH
C230
A1 12RD
(4)
ACC
OFF
RUN
START
C230
A21 12YL
(2)
A21 12DB
S121
8W-70-9
A21 12DB
C140
A21 12YL
S205
8W-70-13
A21 12YL
C201
26 7.5A
FUSE BLOCK
C201
F12 18DB WT
OVERHEAD CONSOLE
FUSED IGNITION SWITCH OUTPUT (START/RUN)
7
C359
INSTRUMENT CLUSTER
FUSED IGNITION SWITCH OUTPUT (START/RUN)
A7
C221
F87 20WT/BK
F87 20WT/BK
CHIME/ BUZZER MODULE
FUSED IGNITION SWITCH OUTPUT
1
C202
C209
F87 20WT/BK
W/ABS
W/O ABS
F87 20WT BK
W/ABS
W/O ABS
C220
C220
C219
14
13
7
4
3
1
FUSED IGNITION SWITCH OUTPUT (START/RUN)
FUSED IGNITION SWITCH OUTPUT (START/RUN)
FUSED IGNITION SWITCH OUTPUT (START/RUN)
TELLTALE CONNECTOR (W/O ABS)
TELLTALE CONNECTOR (W/ABS)
HEADLAMP DELAY MODULE
J958W-13

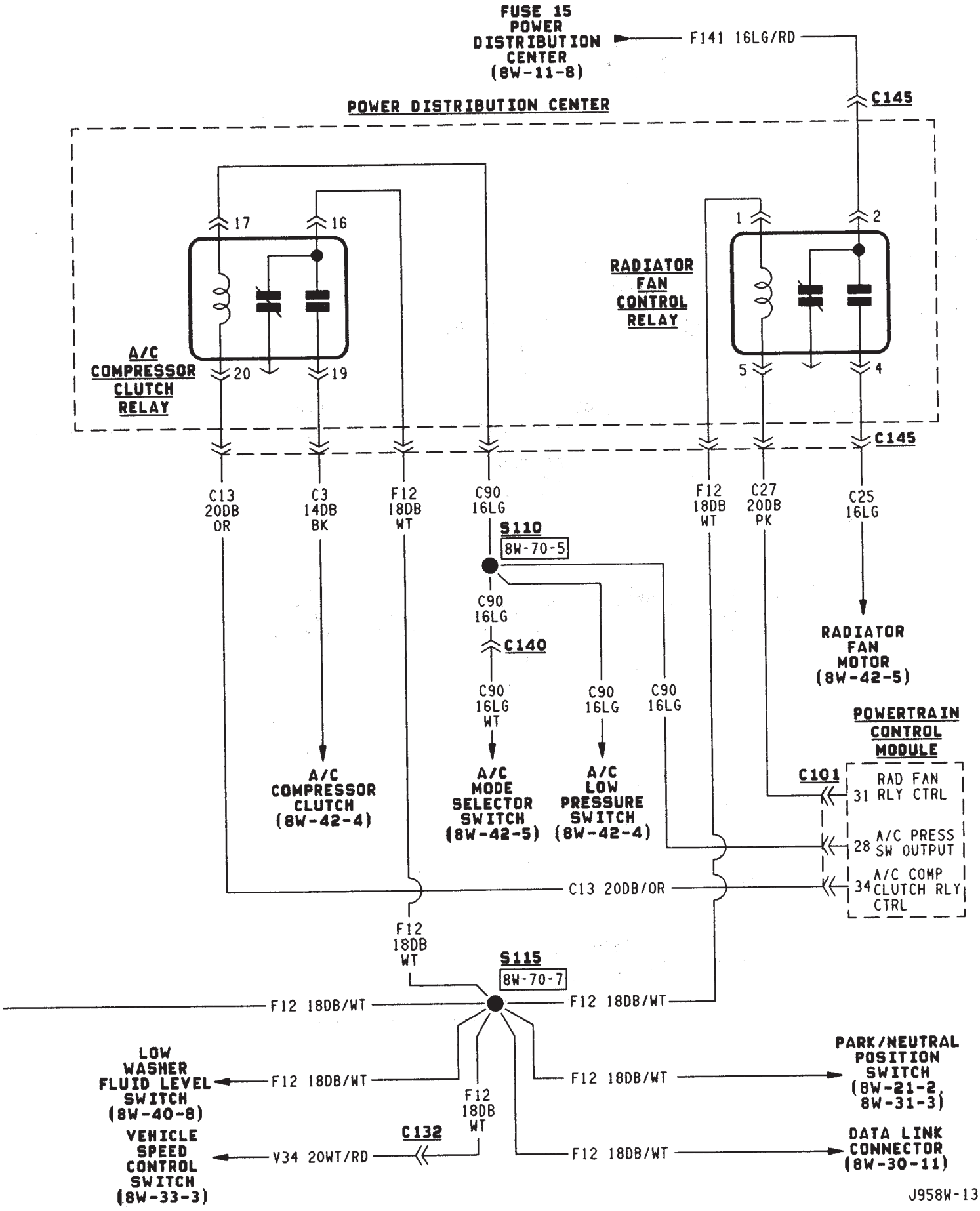
FUSE 15
POWER
DISTRIBUTION
CENTER
(8W-11-8)
F141 16LG/RD
C145
POWER DISTRIBUTION CENTER
17
16
1
2
RADIATOR
FAN
CONTROL
RELAY
A/C
COMPRESSOR
CLUTCH
RELAY
20
19
5
4
C145
C13
20DB
OR
C3
14DB
BK
F12
18DB
WT
C90
16LG
F12
18DB
WT
C27
20DB
PK
C25
16LG
S110
8W-70-5
C90
16LG
C140
C90
16LG
WT
C90
16LG
C90
16LG
RADIATOR
FAN
MOTOR
(8W-42-5)
POWERTRAIN
CONTROL
MODULE
C101
RAD FAN
31 RLY CTRL
28 A/C PRESS
SW OUTPUT
34 A/C COMP
CLUTCH RLY
CTRL
A/C
COMPRESSOR
CLUTCH
(8W-42-4)
A/C
MODE
SELECTOR
SWITCH
(8W-42-5)
A/C
LOW
PRESSURE
SWITCH
(8W-42-4)
C13 20DB/OR
F12
18DB
WT
S115
8W-70-7
F12 18DB/WT
F12 18DB/WT
LOW
WASHER
FLUID LEVEL
SWITCH
(8W-40-8)
F12 18DB/WT
F12 18DB/WT
PARK/NEUTRAL
POSITION
SWITCH
(8W-21-2,
8W-31-3)
F12
18DB
WT
C132
VEHICLE
SPEED
CONTROL
SWITCH
(8W-33-3)
V34 20WT/RD
F12 18DB/WT
DATA LINK
CONNECTOR
(8W-30-11)
J958W-13

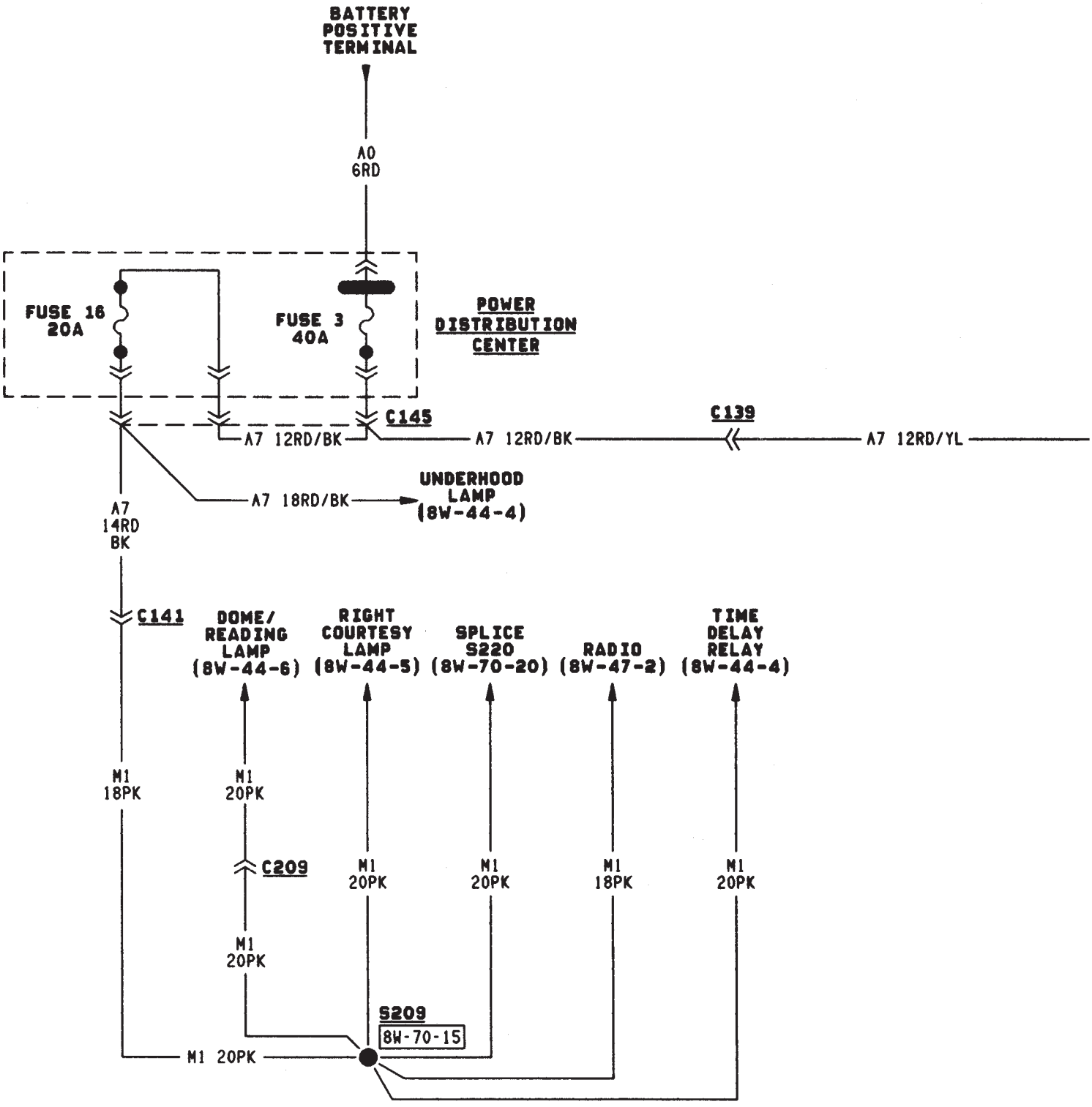
BATTERY POSITIVE TERMINAL
A0 6RD
FUSE 16 20A
FUSE 3 40A
POWER DISTRIBUTION CENTER
C145
A7 12RD/BK
A7 12RD/BK
C139
A7 12RD/YL
A7 18RD/BK
UNDERHOOD LAMP (8W-44-4)
A7 14RD BK
C141
DOME/ READING LAMP (8W-44-6)
RIGHT COURTESY LAMP (8W-44-5)
SPLICE S220 (8W-70-20)
RADIO (8W-47-2)
TIME DELAY RELAY (8W-44-4)
M1 18PK
M1 20PK
C209
M1 20PK
M1 20PK
M1 20PK
M1 18PK
M1 20PK
M1 20PK
S209
8W-70-15
M1 20PK

J958W-13

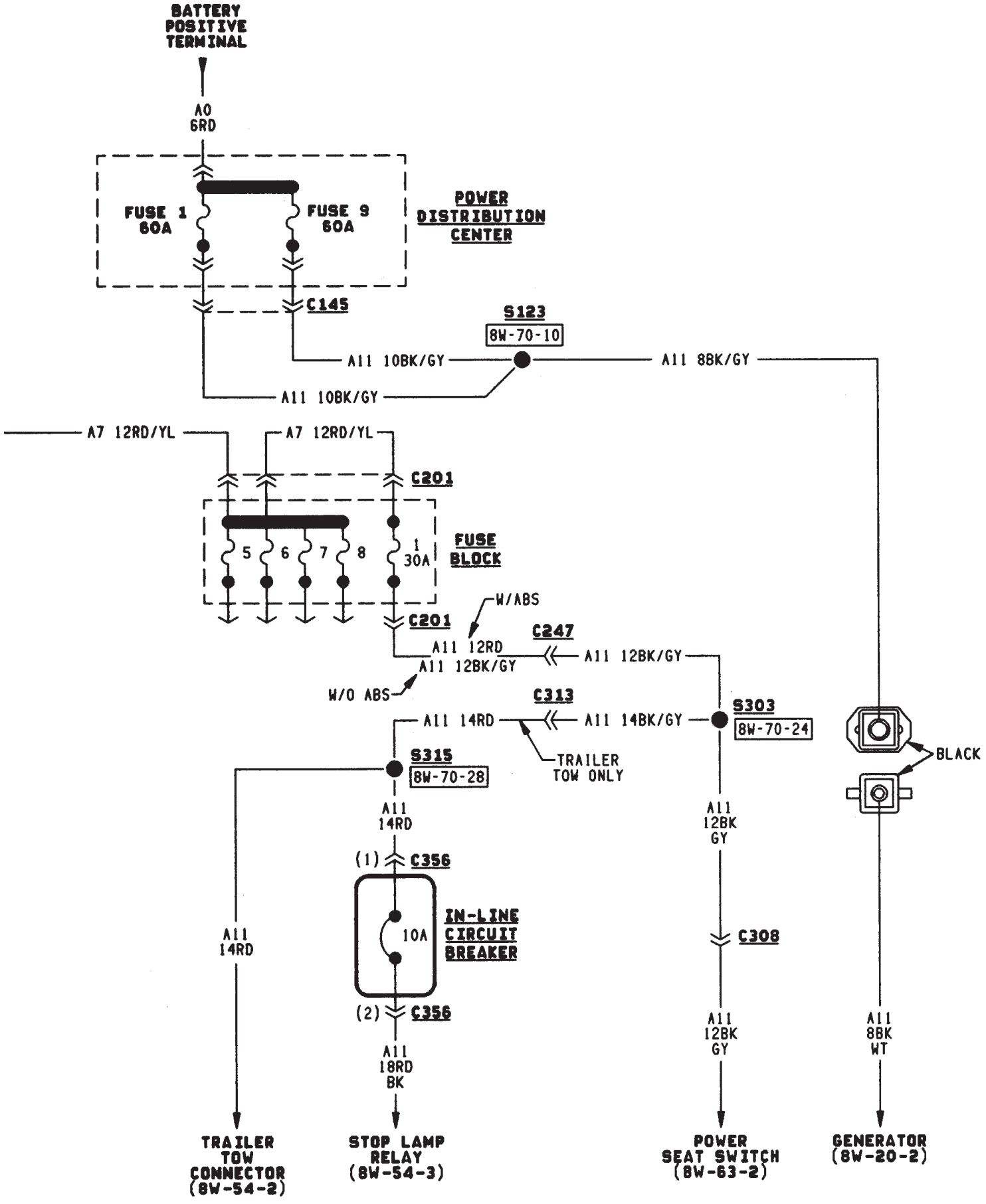
BATTERY POSITIVE TERMINAL
A0 6RD
FUSE 1 60A
FUSE 9 60A
POWER DISTRIBUTION CENTER
C145
S123
8W-70-10
A11 10BK/GY
A11 8BK/GY
A11 10BK/GY
A7 12RD/YL
A7 12RD/YL
C201
5
6
7
8
1 30A
FUSE BLOCK
C201
W/ABS
C247
A11 12RD
A11 12BK/GY
A11 12BK/GY
W/O ABS
C313
A11 14RD
A11 14BK/GY
S303
8W-70-24
BLACK
S315
8W-70-28
TRAILER TOW ONLY
A11 14RD
(1) C356
10A
IN-LINE CIRCUIT BREAKER
(2) C356
A11 18RD BK
A11 14RD
A11 12BK GY
C308
A11 12BK GY
A11 8BK WT
TRAILER TOW CONNECTOR (8W-54-2)
STOP LAMP RELAY (8W-54-3)
POWER SEAT SWITCH (8W-63-2)
GENERATOR (8W-20-2)

J958W-13

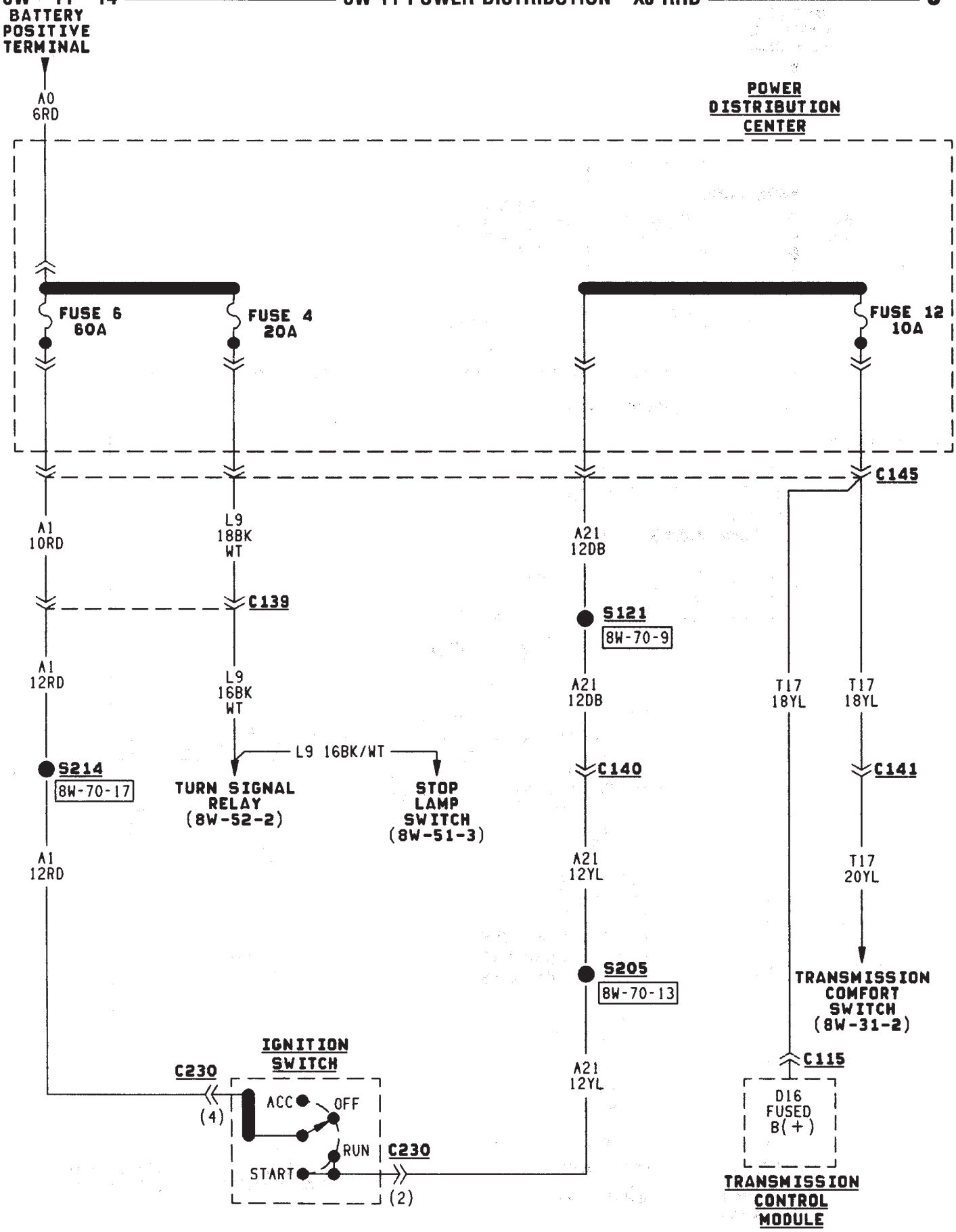
BATTERY POSITIVE TERMINAL
A0 6RD
POWER DISTRIBUTION CENTER
FUSE 6 60A
FUSE 4 20A
FUSE 12 10A
C145
A1 10RD
L9 18BK WT
A21 12DB
C139
S121
8W-70-9
A1 12RD
L9 16BK WT
A21 12DB
T17 18YL
T17 18YL
L9 16BK/WT
S214
8W-70-17
TURN SIGNAL RELAY (8W-52-2)
STOP LAMP SWITCH (8W-51-3)
C140
C141
A1 12RD
A21 12YL
T17 20YL
S205
8W-70-13
TRANSMISSION COMFORT SWITCH (8W-31-2)
IGNITION SWITCH
C230
C115
ACC
OFF
RUN
START
C230
(4)
(2)
A21 12YL
D16 FUSED B(+)
TRANSMISSION CONTROL MODULE
J958W-13

RELAY CENTER

C241

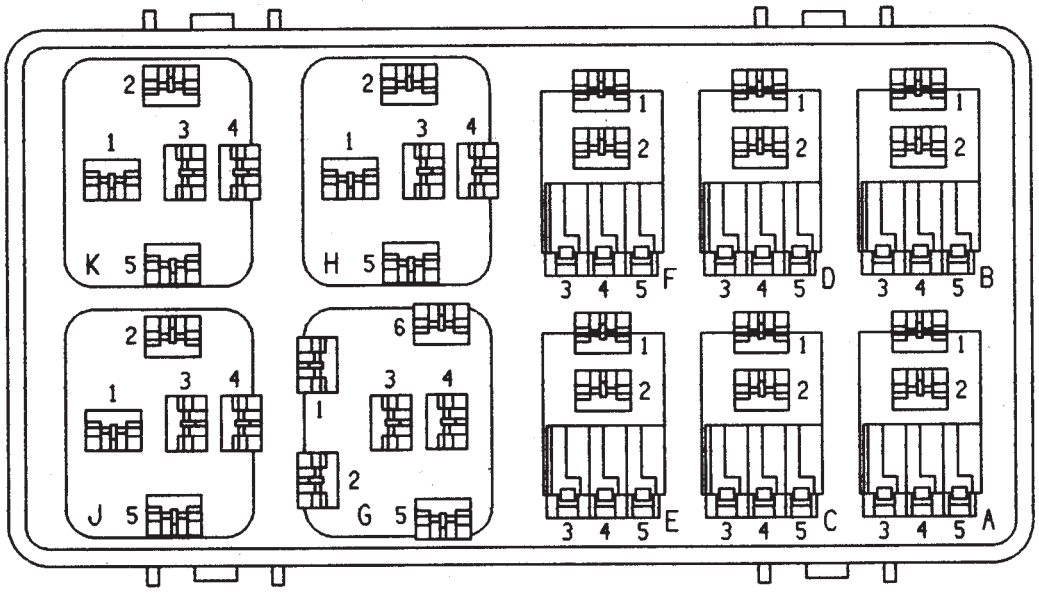

POWER DOOR LOCK RELAY (8W-61-3)

CAV	CIRCUIT	FUNCTION
A1	P2 18BK/WT	DOOR LOCK RELAY OUTPUT
A2	P37 18LG	FUSED B(+)
A2	P37 18LG	FUSED B(+)
A3	P35 200R/VT	DOOR LOCK SWITCH OUTPUT (LOCK)
A4	Z1 18BK	GROUND
A4	Z1 18BK	GROUND
A5	Z1 18BK	GROUND
A5	Z1 18BK	GROUND
A5	Z1 18BK	GROUND

POWER DOOR UNLOCK RELAY (8W-61-3)

CAV	CIRCUIT	FUNCTION
B1	P34 18PK/BK	DOOR UNLOCK RELAY OUTPUT
B2	P37 18LG	FUSED B(+)
B3	P36 20PK/VT	DOOR LOCK SWITCH OUTPUT (UNLOCK)
B4	Z1 18BK	GROUND
B4	Z1 18BK	GROUND
B5	Z1 18BK	GROUND
B5	Z1 18BK	GROUND (W/O ABS)

LCD ILLUMINATION RELAY (8W-47-3)

CAV	CIRCUIT	FUNCTION
C1	X5 18LB/RD	RADIO RELAY OUTPUT
C2	E2 200R/BK	PANEL LAMPS DRIVER
C3	Z1 20BK	GROUND
C4	F85 18VT/WT	FUSED IGNITION SWITCH OUTPUT (ACC/RUN)
C5	L90 18DB/RD	PARK LAMP SWITCH OUTPUT
C5	L90 18DB/RD	PARK LAMP SWITCH OUTPUT

DIMMING RELAY (8W-50-8) (ABS ONLY)

CAV	CIRCUIT	FUNCTION
D1	L90 18DB/RD	PARK LAMP SWITCH OUTPUT
D2	A38 12OR	FUSED B(+)
D3	L170 20BR	DIMMING RELAY CONTROL
D4	—	—
D5	Z1 18BK	GROUND
D5	Z1 18BK	GROUND

HEADLAMP RELAY (8W-50-9) (ABS ONLY)

CAV	CIRCUIT	FUNCTION
E1	F34 12TN/BK	HEADLAMP SWITCH OUTPUT
E2	F39 12PK/LG	HEADLAMP RELAY OUTPUT
E3	F34 12TN/BK	HEADLAMP SWITCH OUTPUT
E4	—	—
E5	Z1 18BK	GROUND
E5	Z1 18BK	GROUND

HORN RELAY (8W-41-2)

CAV	CIRCUIT	FUNCTION
F1	X4 16GY/OR	FUSED B(+)
F2	X2 16DG/RD	HORN RELAY OUTPUT
F3	X3 20BK/RD	HORN RELAY CONTROL
F4	—	—
F5	X4 16GY/OR	FUSED B(+)
F5	X4 16GY/OR	FUSED B(+)

POWER ANTENNA RELAY (8W-47-6) (ABS ONLY)

CAV	CIRCUIT	FUNCTION
G1	Z1 18BK	GROUND
G1	Z1 18BK	GROUND
G2	F60 18RD/WT	FUSED B(+)
G3	X60 18DG/RD	RADIO 12V OUTPUT
G4	X13 18BK/RD	ANTENNA B(+) UP
G5	X14 18WT/GY	ANTENNA B(+) DOWN
G5	X17 18GY/BK	POWER ANTENNA (GROUND)

HEATED REAR WINDOW RELAY (8W-48-2)

CAV	CIRCUIT	FUNCTION
H1	C15 12BK/WT	HEATED REAR WINDOW RELAY OUTPUT
H2	Z1 18BK	GROUND
H2	Z1 18BK	GROUND
H3	C80 18DB/WT	HEATED REAR WINDOW SWITCH
H4	F82 12WT	FUSED IGNITION SWITCH OUTPUT
H5	F83 18YL/DG	FUSED IGNITION SWITCH OUTPUT

TURN SIGNAL RELAY (8W-52-2)

CAV	CIRCUIT	FUNCTION
J1	A21 12YL	IGNITION SWITCH OUTPUT (RUN/START)
J2	L9 16PK/BK	FUSED B(+)
J2	L9 16PK/BK	FUSED B(+)
J3	L12 18VT/TN	HAZARD FLASHER OUTPUT
J3	L12 18VT/TN	HAZARD FLASHER OUTPUT
J4	L5 18BK/WT	TURN SIGNAL RELAY OUTPUT
J5	Z1 18BK	GROUND
J5	Z1 18BK	GROUND

GROUND DISTRIBUTION

GENERAL INFORMATION

This section identifies the vehicle grounds, splices connected to each ground, and the components connected to each ground. Refer to the appropriate section of the wiring diagrams for circuit descriptions of specific systems. Refer to sub-section 8W-90 for illustrations of the physical location of each ground on the vehicle.

DIAGRAM INDEX

Component	Page
G101	8W-15-2
G102	8W-15-2
G103	8W-15-2
G104	8W-15-3
G105	8W-15-3
G106	8W-15-3
G107	8W-15-3
G108	8W-15-3
G201 (With ABS)	8W-15-4, 6
G201 (Without ABS)	8W-15-5, 6
G301	8W-15-4, 5, 6
S102	8W-15-2
S103	8W-15-2
S112	8W-15-3
S117	8W-15-3
S120	8W-15-2
S203	8W-15-4, 6
S204	8W-15-4, 6
S222	8W-15-5, 6
S306	8W-15-4, 5, 6
S309	8W-15-4, 5, 6

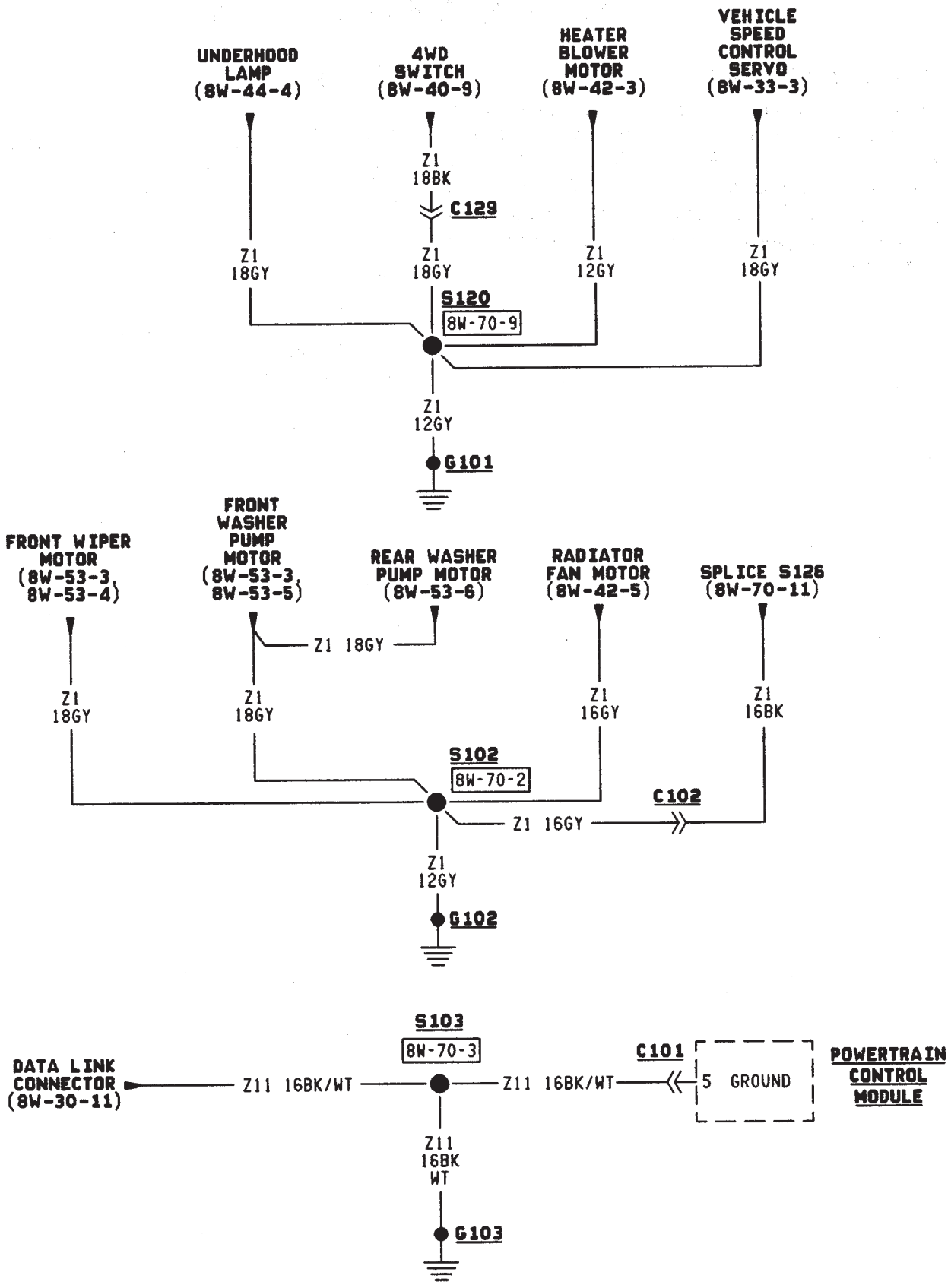
UNDERHOOD LAMP (8W-44-4)
4WD SWITCH (8W-40-9)
HEATER BLOWER MOTOR (8W-42-3)
VEHICLE SPEED CONTROL SERVO (8W-33-3)
Z1 18BK
C129
Z1 18GY
Z1 18GY
Z1 12GY
Z1 18GY
S120
8W-70-9
Z1 12GY
G101
FRONT WIPER MOTOR (8W-53-3, 8W-53-4)
FRONT WASHER PUMP MOTOR (8W-53-3, 8W-53-5)
REAR WASHER PUMP MOTOR (8W-53-6)
RADIATOR FAN MOTOR (8W-42-5)
SPLICE S126 (8W-70-11)
Z1 18GY
Z1 18GY
Z1 18GY
Z1 16GY
Z1 16BK
S102
8W-70-2
C102
Z1 16GY
Z1 12GY
G102
S103
8W-70-3
C101
DATA LINK CONNECTOR (8W-30-11)
Z11 16BK/WT
Z11 16BK/WT
5 GROUND
POWERTRAIN CONTROL MODULE
Z11 16BK WT
G103

J958W-13

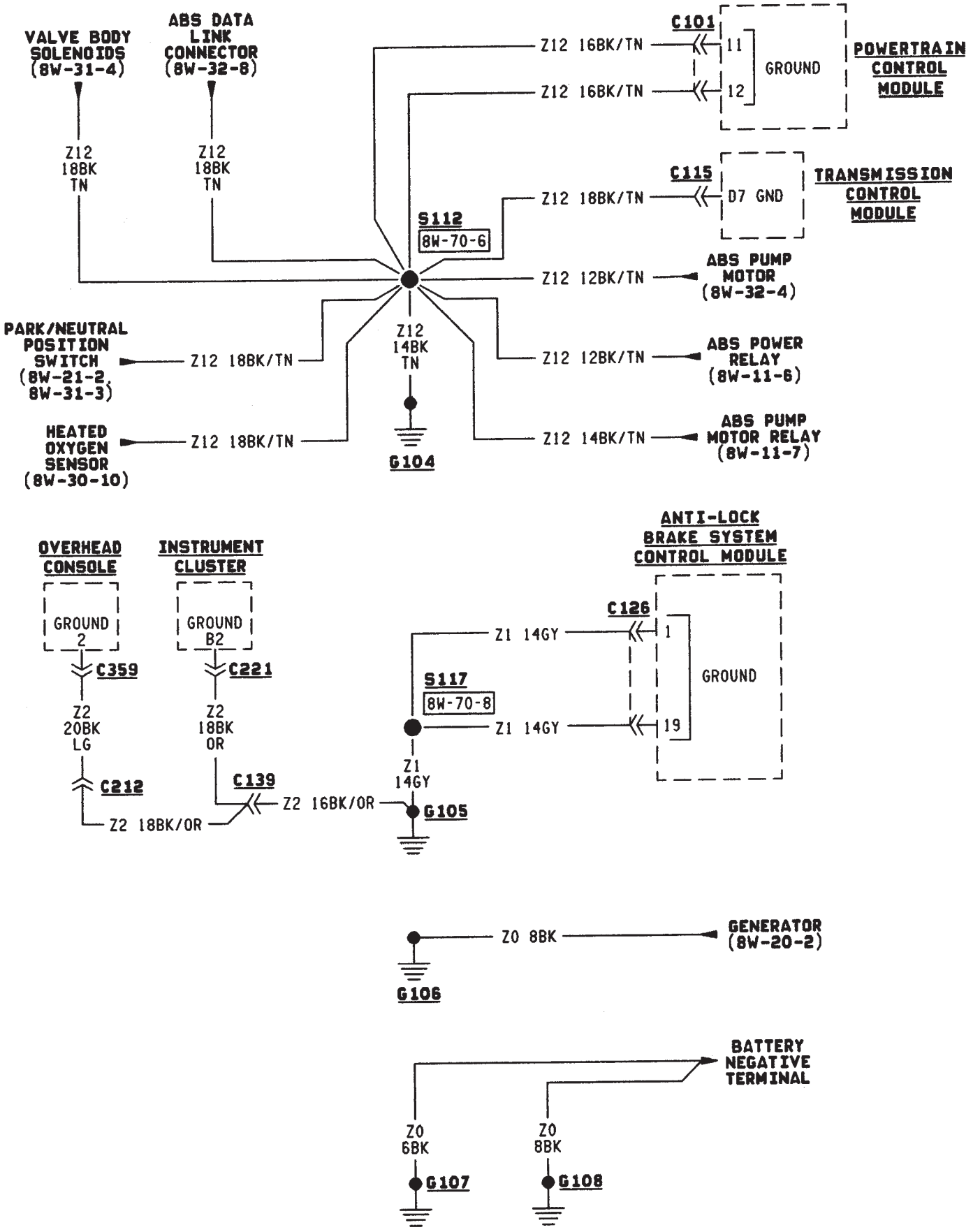
VALVE BODY SOLENOIDS (8W-31-4)
ABS DATA LINK CONNECTOR (8W-32-8)
Z12 18BK TN
Z12 18BK TN
C101
Z12 16BK/TN
11
GROUND
POWERTRAIN CONTROL MODULE
Z12 16BK/TN
12
C115
Z12 18BK/TN
D7 GND
TRANSMISSION CONTROL MODULE
S112
8W-70-6
Z12 12BK/TN
ABS PUMP MOTOR (8W-32-4)
PARK/NEUTRAL POSITION SWITCH (8W-21-2, 8W-31-3)
Z12 18BK/TN
Z12 14BK TN
Z12 12BK/TN
ABS POWER RELAY (8W-11-6)
HEATED OXYGEN SENSOR (8W-30-10)
Z12 18BK/TN
Z12 14BK/TN
ABS PUMP MOTOR RELAY (8W-11-7)
G104
OVERHEAD CONSOLE
INSTRUMENT CLUSTER
ANTI-LOCK BRAKE SYSTEM CONTROL MODULE
GROUND 2
GROUND B2
C126
Z1 14GY
1
GROUND
C359
C221
S117
8W-70-8
Z1 14GY
19
Z2 20BK LG
Z2 18BK OR
Z1 14GY
C212
C139
Z2 16BK/OR
G105
Z2 18BK/OR
Z0 8BK
GENERATOR (8W-20-2)
G106
BATTERY NEGATIVE TERMINAL
Z0 6BK
Z0 8BK
G107
G108

J958W-13

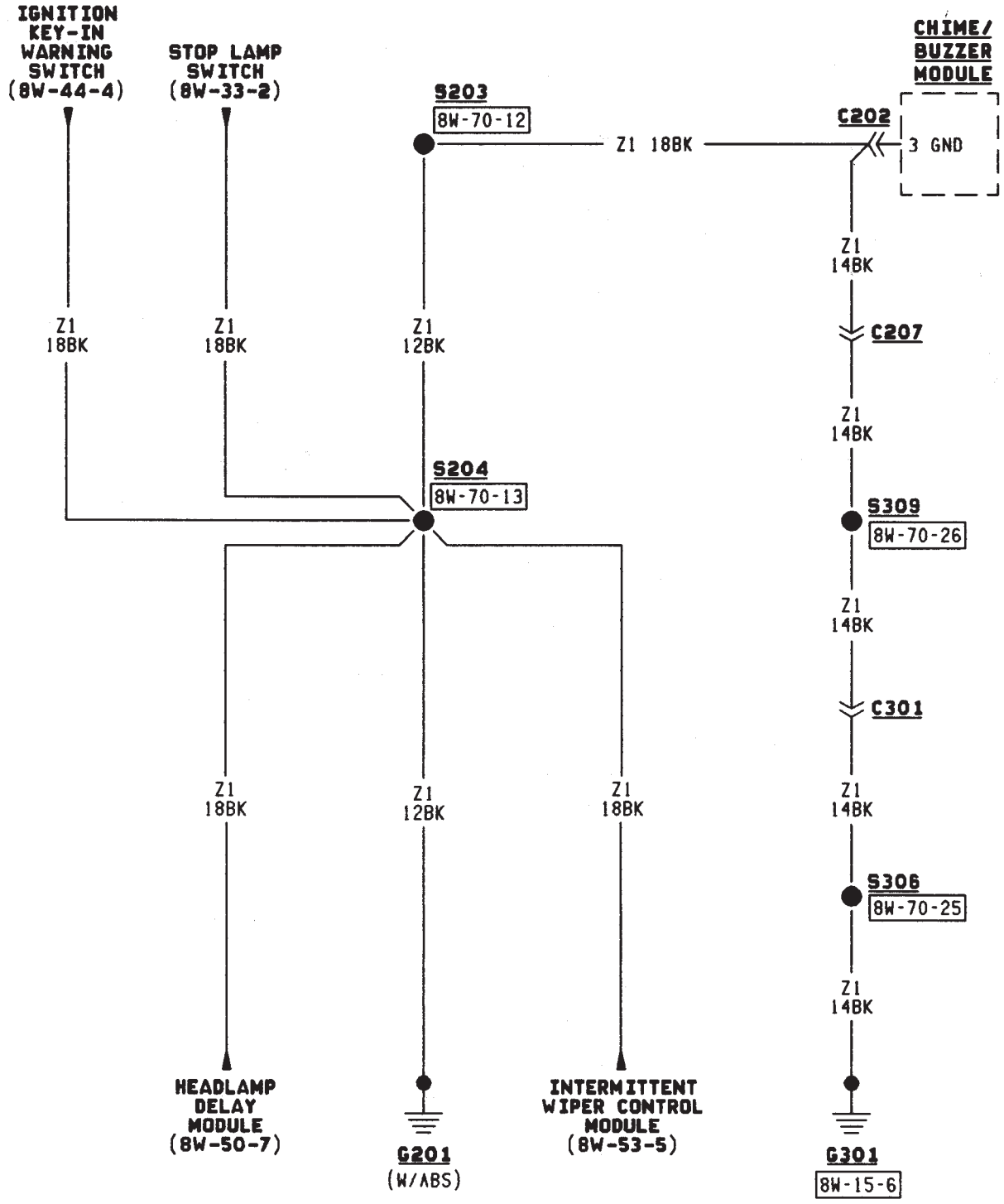
IGNITION KEY-IN WARNING SWITCH (8W-44-4)
STOP LAMP SWITCH (8W-33-2)
S203
8W-70-12
Z1 18BK
C202
3 GND
CHIME/ BUZZER MODULE
Z1 14BK
C207
Z1 14BK
S309
8W-70-26
Z1 14BK
C301
Z1 14BK
S306
8W-70-25
Z1 14BK
Z1 18BK
Z1 18BK
Z1 12BK
S204
8W-70-13
Z1 18BK
Z1 12BK
Z1 18BK
HEADLAMP DELAY MODULE (8W-50-7)
G201
(W/ABS)
INTERMITTENT WIPER CONTROL MODULE (8W-53-5)
G301
8W-15-6

J958W-13

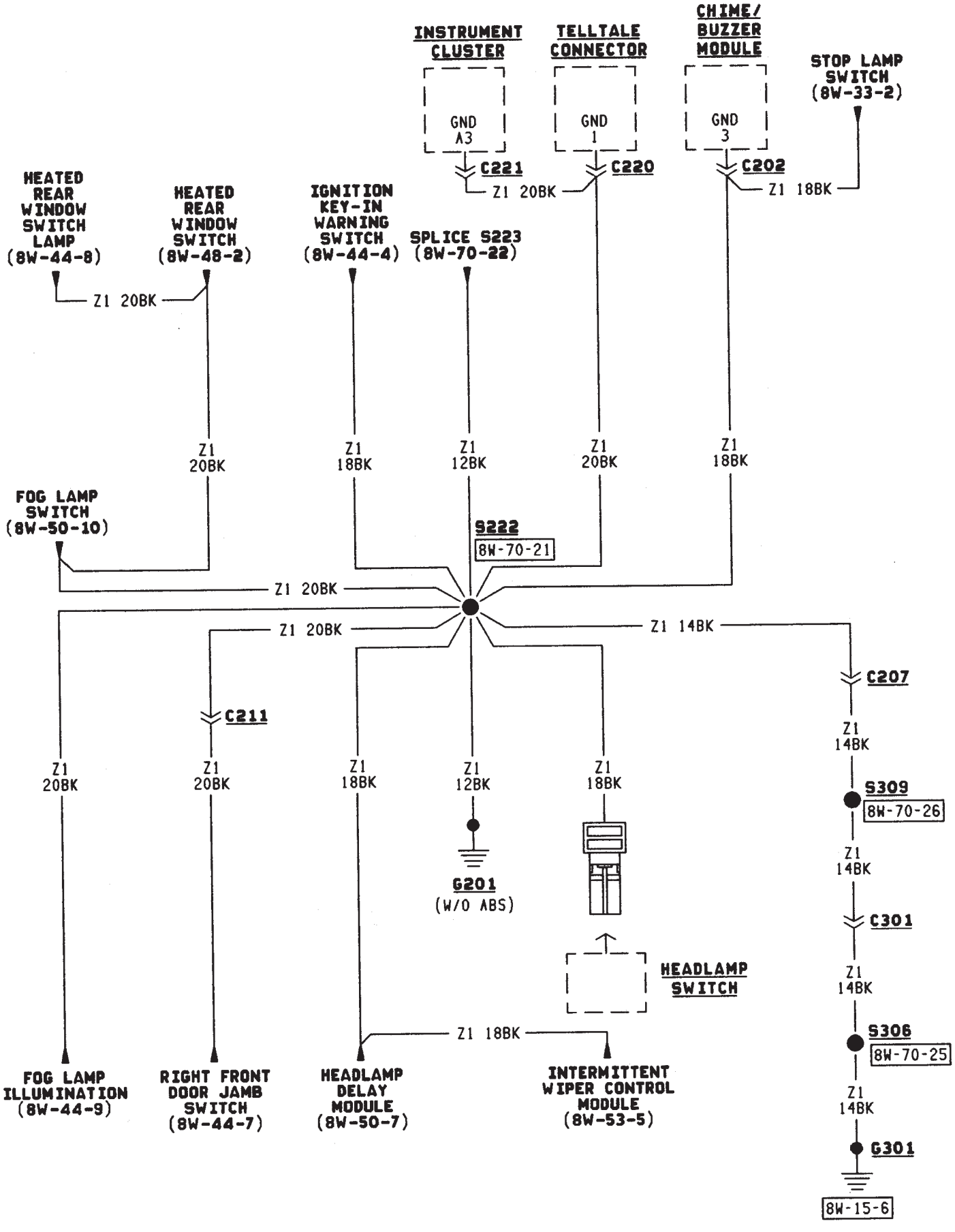
INSTRUMENT CLUSTER
GND A3
C221
TELLTALE CONNECTOR
GND 1
C220
CHIME/ BUZZER MODULE
GND 3
C202
STOP LAMP SWITCH (8W-33-2)
Z1 18BK
Z1 20BK
HEATED REAR WINDOW SWITCH LAMP (8W-44-8)
HEATED REAR WINDOW SWITCH (8W-48-2)
IGNITION KEY-IN WARNING SWITCH (8W-44-4)
SPLICE S223 (8W-70-22)
Z1 20BK
Z1 18BK
Z1 12BK
Z1 20BK
Z1 18BK
FOG LAMP SWITCH (8W-50-10)
S222
8W-70-21
Z1 20BK
Z1 20BK
Z1 14BK
C211
C207
Z1 20BK
Z1 20BK
Z1 18BK
Z1 12BK
Z1 18BK
Z1 14BK
S309
8W-70-26
G201
(W/O ABS)
Z1 14BK
C301
HEADLAMP SWITCH
Z1 14BK
S306
8W-70-25
Z1 18BK
Z1 14BK
G301
8W-15-6
FOG LAMP ILLUMINATION (8W-44-9)
RIGHT FRONT DOOR JAMB SWITCH (8W-44-7)
HEADLAMP DELAY MODULE (8W-50-7)
INTERMITTENT WIPER CONTROL MODULE (8W-53-5)

J958W-13

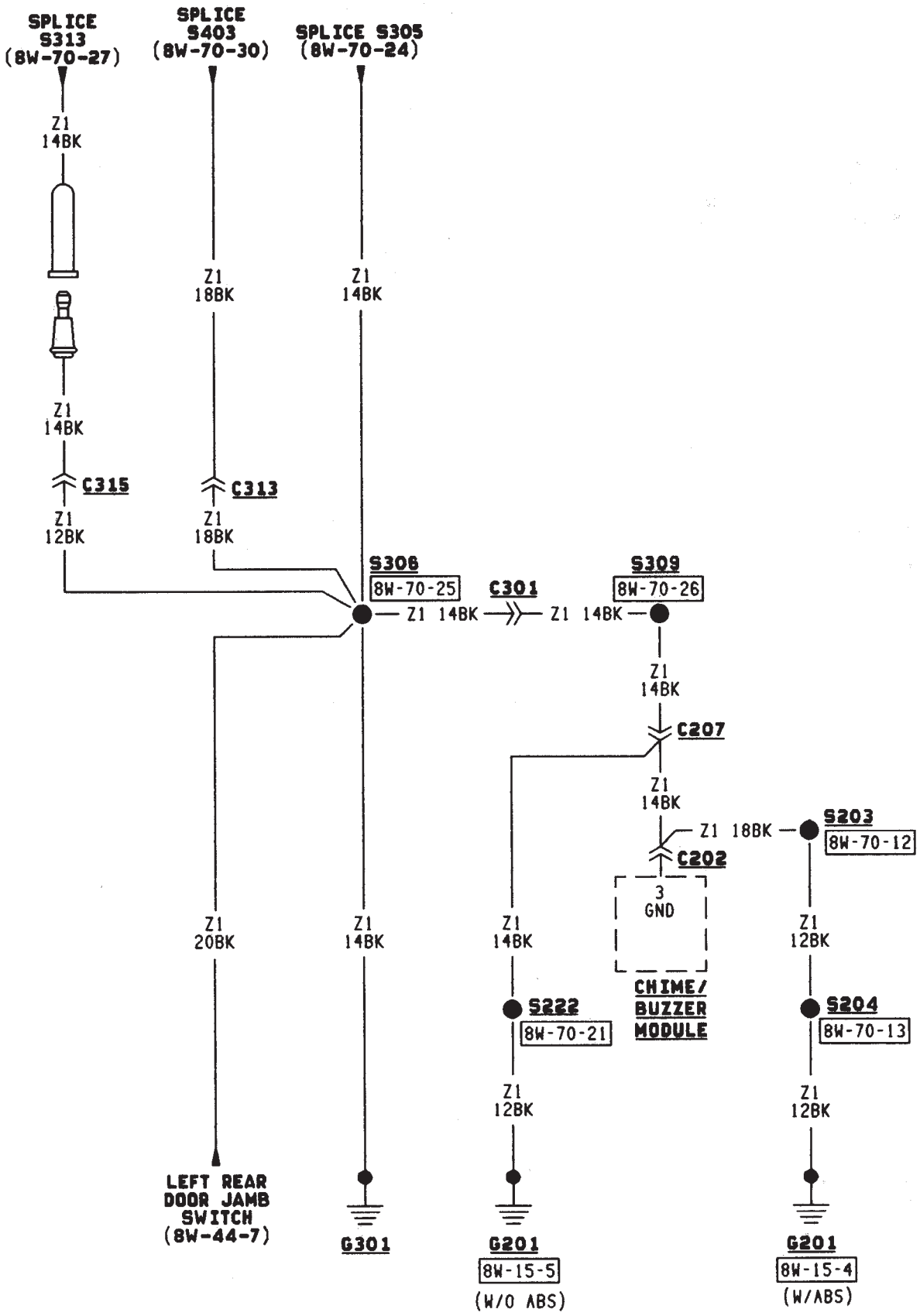
SPLICE S313 (8W-70-27)
SPLICE S403 (8W-70-30)
SPLICE S305 (8W-70-24)
Z1 14BK
Z1 18BK
Z1 14BK
Z1 14BK
C315
C313
Z1 12BK
Z1 18BK
S308
8W-70-25
C301
S309
8W-70-26
Z1 14BK
Z1 14BK
Z1 14BK
C207
Z1 14BK
Z1 18BK
S203
8W-70-12
C202
3 GND
Z1 20BK
Z1 14BK
Z1 14BK
Z1 12BK
CHIME/ BUZZER MODULE
S222
8W-70-21
S204
8W-70-13
Z1 12BK
Z1 12BK
LEFT REAR DOOR JAMB SWITCH (8W-44-7)
G301
G201
8W-15-5
(W/O ABS)
G201
8W-15-4
(W/ABS)

J958W-13

CHARGING SYSTEM

CHARGING SYSTEM

The charging system is an integral part of the battery and starting systems. Because all these systems work in conjunction, diagnose and test them together.

Circuit A11 connects to the generator output terminal and splices to fuse 1 and fuse 9 in the Power Distribution Center (PDC). Circuit A0 connects the battery to the PDC. Circuit Z0 provides ground for the generator.

When the ignition switch is in either the START or RUN positions, it connects circuit A1 from fuse 6 in the PDC to circuit A21. Circuit A21 splices to supply current to the coil side of the Automatic Shut Down (ASD) relay. The Powertrain Control Module (PCM) provides ground for the relay on circuit K51. Circuit K51 connects to cavity 51 of the PCM.

When the PCM grounds the ASD relay, contacts inside the relay close and connect circuit A18 from fuse 14 in the PDC to circuit A142. Circuit A142 splices to the generator field terminal.

The PCM has an internal voltage regulator that controls generator output. The PCM controls the generator field on circuit K20. Circuit K20 connects to PCM cavity 20.

When the engine operates and there is current in the generator field, the generator produces a B+ voltage. The generator supplies B+ voltage to the battery through the A11 and A0 circuits.

HELPFUL INFORMATION

- Circuit A14 from fuse 2 in the PDC supplies voltage to PDC fuse 14.
- The ignition switch also connects circuit A1 with circuits A41, A38, and A48.
- Circuit A21 also powers the coil side of the fuel pump relay.
- The ASD relay supplies battery voltage for the fuel injectors, ignition coil, and the heated oxygen sensor. The fuel pump relay powers the fuel pump module.
- Circuit K51 also provides ground for the coil side of the fuel pump relay.

DIAGRAM INDEX

Component	Page
Battery	8W-20-2
PDC Fuse 1	8W-20-2
PDC Fuse 9	8W-20-2
Generator	8W-20-2
Powertrain Control Module	8W-20-2

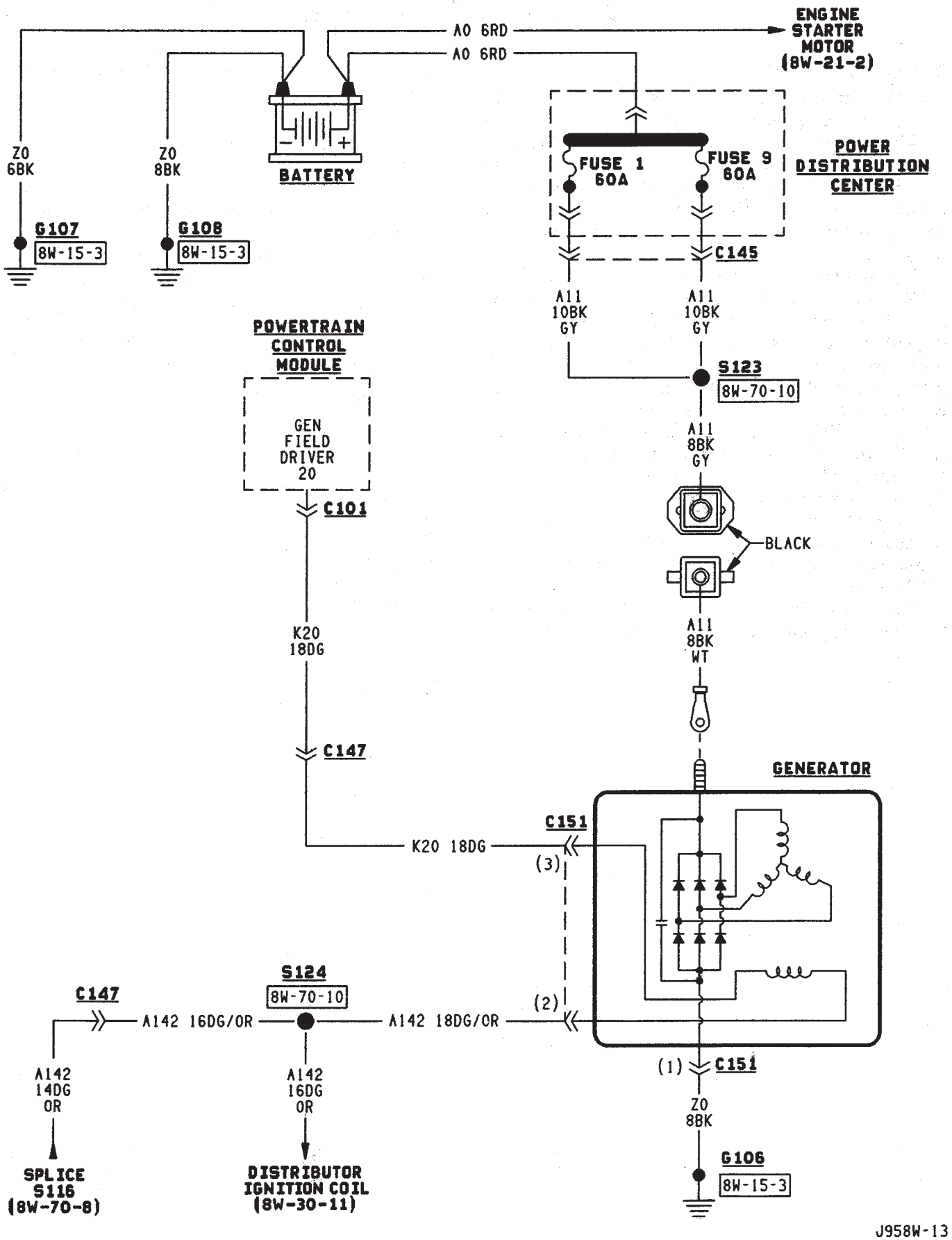
A0 6RD
A0 6RD
ENGINE STARTER MOTOR (8W-21-2)
Z0 6BK
Z0 8BK
BATTERY
FUSE 1 60A
FUSE 9 60A
POWER DISTRIBUTION CENTER
G107
8W-15-3
G108
8W-15-3
C145
A11 10BK GY
A11 10BK GY
POWERTRAIN CONTROL MODULE
GEN FIELD DRIVER 20
S123
8W-70-10
A11 8BK GY
C101
BLACK
K20 18DG
A11 8BK WT
C147
GENERATOR
C151
K20 18DG
(3)
S124
8W-70-10
C147
A142 16DG/OR
A142 18DG/OR
(2)
A142 14DG OR
A142 16DG OR
(1)
C151
Z0 8BK
SPLICE S116 (8W-70-8)
DISTRIBUTOR IGNITION COIL (8W-30-11)
G106
8W-15-3
J958W-13

STARTING SYSTEM

STARTING SYSTEM

Circuit A0 from the battery is double crimped at the positive battery post. One branch of circuit A0 (battery positive cable) connects to the engine starter motor. The other A0 branch supplies voltage to the bus bar in the power distribution center (PDC).

Fuse 7 in the PDC supplies battery voltage to the contact side of the engine starter motor relay on circuit A4. When the coil side of the engine starter motor relay energizes, the contacts close and connect circuit A4 to circuit T40. Circuit T40 supplies battery voltage to the starter motor solenoid.

The ignition switch supplies battery voltage to the coil side of the starter motor relay on circuit A41 when the key is moved to the START position. Ground for the coil side of the starter motor relay is supplied by the case grounded Park/Neutral position switch. Circuit T41 connects the coil side of the relay to the Park/Neutral position switch.

When the starter motor relay energizes and the contacts close, circuit T40 supplies battery voltage to the starter motor solenoid. Circuit A0 from the battery supplies voltage to the starter motor when the solenoid energizes.

HELPFUL INFORMATION

- The Park/Neutral switch closes when the transmission is in either the PARK or NEUTRAL positions.
- Circuit T41 also connects to cavity 30 of the Powertrain Control Module (PCM). This input tells the PCM the operator is starting the vehicle.
- Circuit A4 is double crimped at the contact side of the starter motor relay. The A4 branch leaving the relay powers fuse 13 in the PDC.

DIAGRAM INDEX

Component	Page
Engine Starter Motor	8W-21-2
Engine Starter Motor Relay	8W-21-2
Ignition Switch	8W-21-2
PDC Fuse 6	8W-21-2
PDC Fuse 7	8W-21-2
PDC Fuse 13	8W-21-2
Powertrain Control Module	8W-21-2
Park/Neutral Position Switch	8W-21-2
Transmission Control Module	8W-21-2

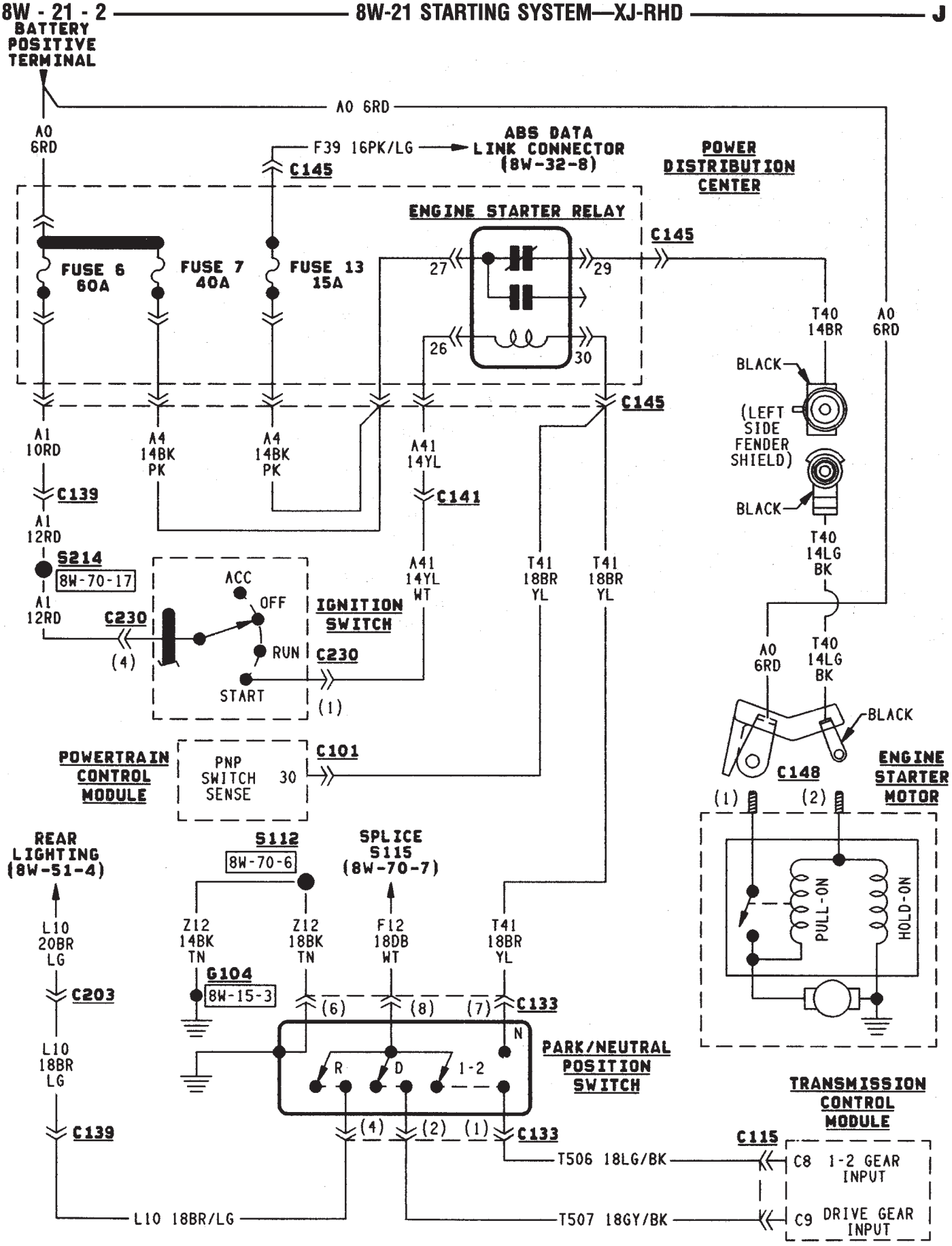
BATTERY POSITIVE TERMINAL
A0 6RD
F39 16PK/LG
ABS DATA LINK CONNECTOR (8W-32-8)
C145
POWER DISTRIBUTION CENTER
ENGINE STARTER RELAY
FUSE 6 60A
FUSE 7 40A
FUSE 13 15A
27
29
26
30
A1 10RD
A4 14BK PK
A4 14BK PK
A41 14YL
C139
C141
A1 12RD
S214
8W-70-17
C230
(4)
ACC
OFF
RUN
START
IGNITION SWITCH
(1)
T41 18BR YL
T41 18BR YL
T40 14BR
T40 14LG BK
BLACK
(LEFT SIDE FENDER SHIELD)
BLACK
POWERTRAIN CONTROL MODULE
PNP SWITCH SENSE
30
C101
C148
ENGINE STARTER MOTOR
PULL-IN
HOLD-IN
REAR LIGHTING (8W-51-4)
L10 20BR LG
C203
L10 18BR LG
S112
8W-70-6
SPLICE S115 (8W-70-7)
Z12 14BK TN
Z12 18BK TN
F12 18DB WT
G104
8W-15-3
(6)
(8)
(7)
C133
N
R
D
1-2
PARK/NEUTRAL POSITION SWITCH
(4)
(2)
(1)
TRANSMISSION CONTROL MODULE
C115
C8 1-2 GEAR INPUT
C9 DRIVE GEAR INPUT
T506 18LG/BK
T507 18GY/BK
L10 18BR/LG
J958W-13

FUEL/IGNITION

INDEX

page

Automatic Shut Down (ASD) Relay 1
Battery Feed 1
Brake Switch Input 5
Camshaft Position Sensor 3
Crankshaft Position Sensor 3
Data Link Connector 4
Diagram Index 5
Engine Coolant Temperature Sensor 3
Fuel Injectors 1
Fuel Pump Module 2
Fuel Pump Relay 2
Heated Oxygen Sensor 3
Idle Air Control (IAC) Motor 2
Ignition Coil 2
Ignition Feed 1
Ignition Switch 1
Intake Air Temperature Sensor 4
Malfunction Indicator Lamp (MIL) 4
Manifold Absolute Pressure Sensor 4
Park/Neutral Position Switch 4
Power (Device) Ground 5
Tachometer Signal 4
Throttle Position Sensor 4
Vehicle Speed Sensor 2

IGNITION SWITCH

Circuit A1 from fuse 11 in the power distribution center (PDC), supplies battery voltage to the ignition switch. Depending upon position, the ignition switch powers circuits A21, A38, A41, or A48.

START POSITION

In the START position, the ignition switch connects circuit A1 to circuit A41. Circuit A41 connects to the coil side of the starter motor relay.

Additionally in the START position, the case grounded ignition switch provides ground for the brake lamp switch and the warning lamps in the instrument cluster.

START OR RUN POSITION

In the START or RUN position, the ignition switch connects circuit A1 to circuit A21. Circuit A21 splices to power the coil side of the Automatic Shut Down (ASD) relay and the fuel pump relay.

RUN (ONLY) POSITION

When the ignition switch is in the RUN position, it connects circuit A1 to circuit A38. Circuit A38 feeds circuit L39.

ACCESSORY OR RUN POSITIONS

In the ACCESSORY or RUN positions, the ignition switch connects circuit A1 to circuit A48. Circuit A48 connects to a bus bar in the fuse block.

AUTOMATIC SHUT DOWN (ASD) RELAY

When the ignition switch is in either the START or RUN positions, it connects circuit A1 from fuse 6 in the Power Distribution Center (PDC) to circuit A21. Circuit A21 supplies battery voltage to the coil side of the Automatic Shut Down (ASD) relay. The Powertrain Control Module (PCM) provides ground for the relay on circuit K51. Circuit K51 connects to cavity 51 of the PCM.

When the PCM grounds the ASD relay, contacts inside the relay close and connect circuit A18 from fuse 14 in the PDC to circuit A142. Circuit A142 splices to the generator field terminal, fuel injectors, and ignition coil. Circuit A142 also connects to cavity 57 of the PCM.

HELPFUL INFORMATION

- Along with supplying voltage to the coil side of the ASD relay, circuit A21 also supplies voltage to the coil side of the fuel pump relay.
- Circuit A21 also connects to cavity 9 of the PCM.

BATTERY FEED

Circuit A14 from fuse 2 in the power distribution center supplies battery voltage to cavity 3 of the Powertrain Control Module (PCM).

HELPFUL INFORMATION

Circuit A14 also supplies power to the contact sides of the fuel pump relay and fuse F2 in the PDC. Fuse F2 powers circuit A18 which supplies voltage to the contact side of the automatic shut down relay.

IGNITION FEED

When the ignition switch is in either the START or RUN positions, it connects circuit A1 from fuse 6 in the Power Distribution Center (PDC) to circuit A21. Circuit A21 also connects to cavity 9 of the PCM and provides the ignition input.

FUEL INJECTORS

When the Automatic Shut Down (ASD) relay contacts close, they connect circuits A18 and A142. Cir-

cuit A142 supplies voltage to the fuel injectors. Each injector has a separate ground circuit controlled by the PCM.

Circuit K11 provides ground for injector number one. The K11 circuit connects to cavity 16 of the PCM.

Circuit K12 provides ground for injector number two. The K12 circuit connects to cavity 15 of the PCM.

Circuit K13 provides ground for injector number three. The K13 circuit connects to cavity 14 of the PCM.

Circuit K14 provides ground for injector number four. The K14 circuit connects to cavity 13 of the PCM.

Circuit K15 provides ground for injector number five. The K15 circuit connects to cavity 38 of the PCM.

Circuit K16 provides ground for injector number six. The K16 circuit connects to cavity 58 of the PCM.

HELPFUL INFORMATION

- Circuit A142 splices to supply voltage to the fuel injectors, ignition coil, PCM, generator.
- For information about fuel injector operation, refer to Group 14.

IGNITION COIL

When the Automatic Shut Down (ASD) relay contacts close, they connect circuits A18 and A142. Circuit A142 splices to supply voltage to the ignition coil. The PCM controls the ground path for the ignition coil on circuit K19. Circuit K19 connects to cavity 19 of the PCM.

HELPFUL INFORMATION

Circuit A142 splices to supply voltage to the fuel injectors, ignition coil, PCM, and generator.

FUEL PUMP RELAY

When the ignition switch is in either the START or RUN positions, it connects circuit A1 from fuse 6 in the Power Distribution Center (PDC) to circuit A21. Circuit A21 supplies battery voltage to the coil side of the fuel pump relay. The Powertrain Control Module (PCM) provides ground for the relay on circuit K51. Circuit K51 connects to cavity 51 of the PCM.

When the PCM grounds the fuel pump relay, contacts inside the relay close and connect circuit A14 from fuse 14 in the PDC to circuit A141. Circuit A141 connects to circuit A241. Circuit A241 supplies voltage to the fuel pump motor (part of the in-tank fuel pump module).

HELPFUL INFORMATION

- Circuit A14 also splices to supply battery voltage to cavity 3 of the PCM.
- Circuit A141 also supplies battery voltage to the heated oxygen sensor.

FUEL PUMP MODULE

FUEL PUMP MOTOR

When the fuel pump relay contacts close, the relay supplies voltage to the fuel pump motor. Circuit A141 from the relay supplies voltage to circuit A241. Circuit A241 connects to circuit F9 in the fuel pump motor. Circuit Z1 provides ground for the fuel pump motor.

FUEL LEVEL SENSOR

The fuel level sensor is a variable resistor. Circuit G4 connects the fuel level sensor to the fuel gauge in the instrument cluster. Circuit F87 from fuse 26 in the fuse block supplies voltage to the fuel gauge. The fuel level sensor draws voltage from circuit F87 through the fuel gauge on circuit G4. Circuit G4 connects to the fuel level sensor.

Circuit Z1 provides the ground path for the fuel level sensor.

HELPFUL INFORMATION

As current flows through the coils in the fuel gauge, it creates a magnetic field. One of the coils in the gauge receives fixed current. The other coil is connected to the level sensor. The magnetic field controls the position of the fuel gauge pointer.

The fuel level sensor contains a variable resistor. As the position of the float arm on the fuel level sensor changes, the resistor changes the current flow through second coil in the fuel gauge. A change in current flow alters the magnetic field in the fuel gauge, which changes the pointer position.

IDLE AIR CONTROL (IAC) MOTOR

The Powertrain Control Module (PCM) operates the idle air control motor through 4 circuits - K39, K40, K59, and K60. Each circuit connects to separate cavities in the PCM connector.

- Circuit K39 connects to cavity 39 of the PCM
- Circuit K40 connects to cavity 40 of the PCM
- Circuit K59 connects to cavity 59 of the PCM
- Circuit K60 connects to cavity 60 of the PCM

VEHICLE SPEED SENSOR

Circuit K7 supplies 8 volts from the Powertrain Control Module (PCM) to the vehicle speed sensor. The K7 circuit connects to cavity 7 of the PCM.

Circuit G7 from the vehicle speed sensor provides an input signal to the PCM. The G7 circuit connects to cavity 47 of the PCM.

The PCM provides a ground for the vehicle speed sensor signal (circuit G7) through circuit K4. Circuit K4 connects to cavity 4 of the PCM.

HELPFUL INFORMATION
- Circuit G7 splices to the speedometer.
- Circuit K7 splices to supply 8 volts to the camshaft position sensor and crankshaft position sensor.

Circuit K4 splices to supply ground for the signals from the following:
- Heated oxygen sensor
- Camshaft position sensor
- Crankshaft position sensor
- Throttle position sensor
- Manifold absolute pressure sensor
- Engine coolant temperature sensor
- Intake air temperature sensor

HEATED OXYGEN SENSOR

When the fuel pump relay contacts close, they connect circuits A14 and A141. Circuit A141 splices to supply voltage to the heated oxygen sensor.

Circuit K41 delivers the signal from the heated oxygen sensor to the PCM. Circuit K41 connects to cavity 41 of the PCM.

The PCM provides a ground for the heated oxygen sensor signal (circuit K41) through circuit K4. Circuit K4 connects to cavity 4 of the PCM connector.

Circuit Z12 provides a ground for the heater circuit in the sensor.

HELPFUL INFORMATION
- Circuit A141 also supplies battery voltage to the fuel pump.

Circuit K4 splices to supply ground for the signals from the following:
- Camshaft position sensor
- Crankshaft position sensor
- Intake air temperature sensor
- Throttle position sensor
- Manifold absolute pressure sensor
- Engine coolant temperature sensor
- Vehicle speed sensor

CAMSHAFT POSITION SENSOR

The Powertrain Control Module (PCM) supplies 8 volts to the camshaft position sensor (in distributor) on circuit K7. Circuit K7 connects to cavity 7 of the PCM.

The PCM receives the camshaft position sensor signal on circuit K44. Circuit K44 connects to cavity 44 of the PCM.

The PCM provides a ground for the camshaft position sensor signal (circuit K44) through circuit K4. Circuit K4 connects to cavity 4 of the PCM.

HELPFUL INFORMATION
- Circuit K7 splices to supply 8 volts to the crankshaft position sensor and the vehicle speed sensor.

Circuit K4 splices to supply ground for the signals from the following:
- Heated oxygen sensor
- Crankshaft position sensor
- Intake air temperature sensor
- Throttle position sensor
- Manifold absolute pressure sensor
- Engine coolant temperature sensor
- Vehicle speed sensor

CRANKSHAFT POSITION SENSOR

The Powertrain Control Module (PCM) supplies 8 volts to the crankshaft position sensor on circuit K7. Circuit K7 connects to cavity 7 of the PCM.

The PCM receives the crankshaft position sensor signal on circuit K24. Circuit K24 connects to cavity 24 of the PCM.

The PCM provides a ground for the crankshaft position sensor (circuit K24) through circuit K4. Circuit K4 connects to cavity 4 of the PCM.

HELPFUL INFORMATION
- Circuit K7 splices to supply 8 volts to the camshaft position sensor and the vehicle speed sensor.

Circuit K4 splices to supply ground for the signals from the following:
- Heated oxygen sensor
- Camshaft position sensor
- Intake air temperature sensor
- Throttle position sensor
- Manifold absolute pressure sensor
- Engine coolant temperature sensor
- Vehicle speed sensor

ENGINE COOLANT TEMPERATURE SENSOR

The engine coolant temperature sensor provides an input to the

Powertrain Control Module (PCM) on circuit K2. From circuit K2, the engine coolant temperature sensor draws up to 5 volts from the PCM. The sensor is a variable resistor. As coolant temperature changes, the resistance in the sensor changes, causing a change in current draw. The K2 circuit connects to cavity 2 of the PCM.

The PCM provides a ground for the engine coolant temperature sensor signal (circuit K2) through circuit K4. Circuit K4 connects to cavity 4 of the PCM connector.

HELPFUL INFORMATION

Circuit K4 splices to supply ground for the signals from the following:
- Heated oxygen sensor
- Camshaft position sensor
- Crankshaft position sensor
- Intake air temperature sensor
- Throttle position sensor
- Manifold absolute pressure sensor
- Vehicle speed sensor

THROTTLE POSITION SENSOR

From the Powertrain Control Module (PCM), circuit K6 supplies 5 volts to the throttle position sensor (TPS). Circuit K6 connects to cavity 6 of the PCM.

Circuit K22 delivers the TPS signal to the PCM. Circuit K22 connects to cavity 22 of the PCM.

The PCM provides a ground for the throttle position sensor signal (circuit K22) through circuit K4. Circuit K4 connects to cavity 4 of the PCM.

HELPFUL INFORMATION

Refer to Group 14 for throttle position sensor operation.

Circuit K6 splices to supply 5 volts to the manifold absolute pressure sensor.

Circuit K22 splices to the transmission control module.

Circuit K4 splices to supply ground for the signals from the following:

- Heated oxygen sensor
- Camshaft position sensor
- Crankshaft position sensor
- Intake air temperature sensor
- Manifold absolute pressure sensor
- Engine coolant temperature sensor
- Vehicle speed sensor

MANIFOLD ABSOLUTE PRESSURE SENSOR

From the Powertrain Control Module (PCM), circuit K6 supplies 5 volts to the manifold absolute pressure (MAP) sensor. Circuit K6 connects to cavity 6 of the PCM.

Circuit K1 delivers the MAP signal to the PCM. Circuit K1 connects to cavity 1 of the PCM.

The PCM provides a ground for the MAP sensor signal (circuit K1) through circuit K4. Circuit K4 connects to cavity 4 of the PCM.

HELPFUL INFORMATION

Refer to Group 14 for MAP sensor operation.

Circuit K6 splices to supply 5 volts to the throttle position sensor.

Circuit K4 splices to supply ground for the signals from the following:

- Heated oxygen sensor
- Camshaft position sensor
- Crankshaft position sensor
- Intake air temperature sensor
- Throttle position sensor
- Engine coolant temperature sensor
- Vehicle speed sensor

INTAKE AIR TEMPERATURE SENSOR

The intake air temperature sensor provides an input to the Powertrain Control Module (PCM) on circuit K21. Circuit K21 connects to cavity 21 of the PCM.

From circuit K21, the intake air temperature sensor draws voltage from the PCM. The sensor is a variable resistor. As intake air temperature changes, the resistance in the sensor changes, causing a change in current draw.

The PCM provides a ground for the intake air temperature sensor signal (circuit K21) through circuit K4. Circuit K4 connects to cavity 4 of the PCM.

HELPFUL INFORMATION

Circuit K4 splices to supply ground for the signals from the following:

- Heated oxygen sensor
- Camshaft position sensor
- Crankshaft position sensor
- Throttle position sensor
- Manifold absolute pressure sensor
- Engine coolant temperature sensor
- Vehicle speed sensor

PARK/NEUTRAL POSITION SWITCH

When closed, the case-grounded park/neutral position switch provides a ground path on circuit T41 for the coil side of the starter motor relay. Circuit A41 from the ignition switch provides battery voltage to the coil side of the relay.

Circuit T41 splices to cavity 30 of the PCM. The park/neutral position switch provides an input to the Powertrain Control Module (PCM).

TACHOMETER SIGNAL

The PCM supplies the signal for the tachometer on circuit G21. Circuit G21 connects to cavity 43 of the PCM.

MALFUNCTION INDICATOR LAMP (MIL)

The Powertrain Control Module (PCM) provides ground for the instrument cluster malfunction indicator lamp on circuit G3. The MIL displays the message CHECK ENGINE when illuminated. Circuit F87 provides voltage for the lamp. Circuit G3 connects to cavity 32 of the PCM.

DATA LINK CONNECTOR

Circuit F12 supplies battery voltage to the data link connector. Circuit F12 originates at fuse 11 in the Power Distribution Center.

Circuit D20 connects to cavity 45 of the PCM. Circuit D20 is the SCI receive circuit for the PCM.

Circuit D21 connects to cavity 25 of the PCM. Circuit D21 is the SCI transmit circuit for the PCM.

Circuit Z11 provides ground for the data link connector. Circuit Z11 also connects to cavity 5 of the PCM.

HELPFUL INFORMATION

• If the system loses ground for the Z11 circuits at the right rear of the engine, the vehicle will not operate. Check the connection at the ganged-ground circuit eyelet.

• Circuit F12 splices to supply battery voltage to the vehicle speed control switch, back-up lamp switch, A/C compressor clutch relay, windshield washer fluid level sensor and radiator fan relay.

BRAKE SWITCH INPUT

Circuit K29 provides the brake switch input to the PCM. Circuit K29 connects to cavity 29 of the PCM.

POWER (DEVICE) GROUND

Circuit Z12 connects to cavities 11 and 12 of the PCM. The Z12 circuit provides ground for PCM internal drivers that operate high current devices like the injectors and ignition coil.

Internal to the PCM, the power (device) ground circuit connects to the PCM sensor return circuit (from circuit K4).

HELPFUL INFORMATION

• The grounding point for circuit Z12 is the right rear of the engine.

• If the system loses ground for the Z12 circuits at the rear of the engine, the vehicle will not operate. Check the connection at the ganged-ground circuit eyelet.

DIAGRAM INDEX

Component	Page
Automatic Shut Down Relay	8W-30-6
Camshaft Position Sensor	8W-30-8
Crankshaft Position Sensor	8W-30-9
Data Link Connector	8W-30-11
Distributor Ignition Coil	8W-30-11
Engine Coolant Temperature Sensor	8W-30-9
Fuel Injector #1	8W-30-7
Fuel Injector #2	8W-30-7
Fuel Injector #3	8W-30-7
Fuel Injector #4	8W-30-7
Fuel Injector #5	8W-30-7
Fuel Injector #6	8W-30-7
Fuel Pump Relay	8W-30-12
Fuel Tank Gauge Level Sending Unit	8W-30-12
Fuse 2 (PDC)	8W-30-6
Fuse 6 (PDC)	8W-30-6
Fuse 11 (PDC)	8W-30-6, 11
Fuse 14 (PDC)	8W-30-6
Heated Oxygen Sensor	8W-30-10
Idle Air Control Motor	8W-30-10
Ignition Switch	8W-30-6, 12
Instrument Cluster	8W-30-11, 12
Intake Air Temperature Sensor	8W-30-9
MAP Sensor	8W-30-8
Powertrain Control Module	8W-30-6 thru 12
Throttle Position Sensor	8W-30-8
Vehicle Speed Sensor	8W-30-11

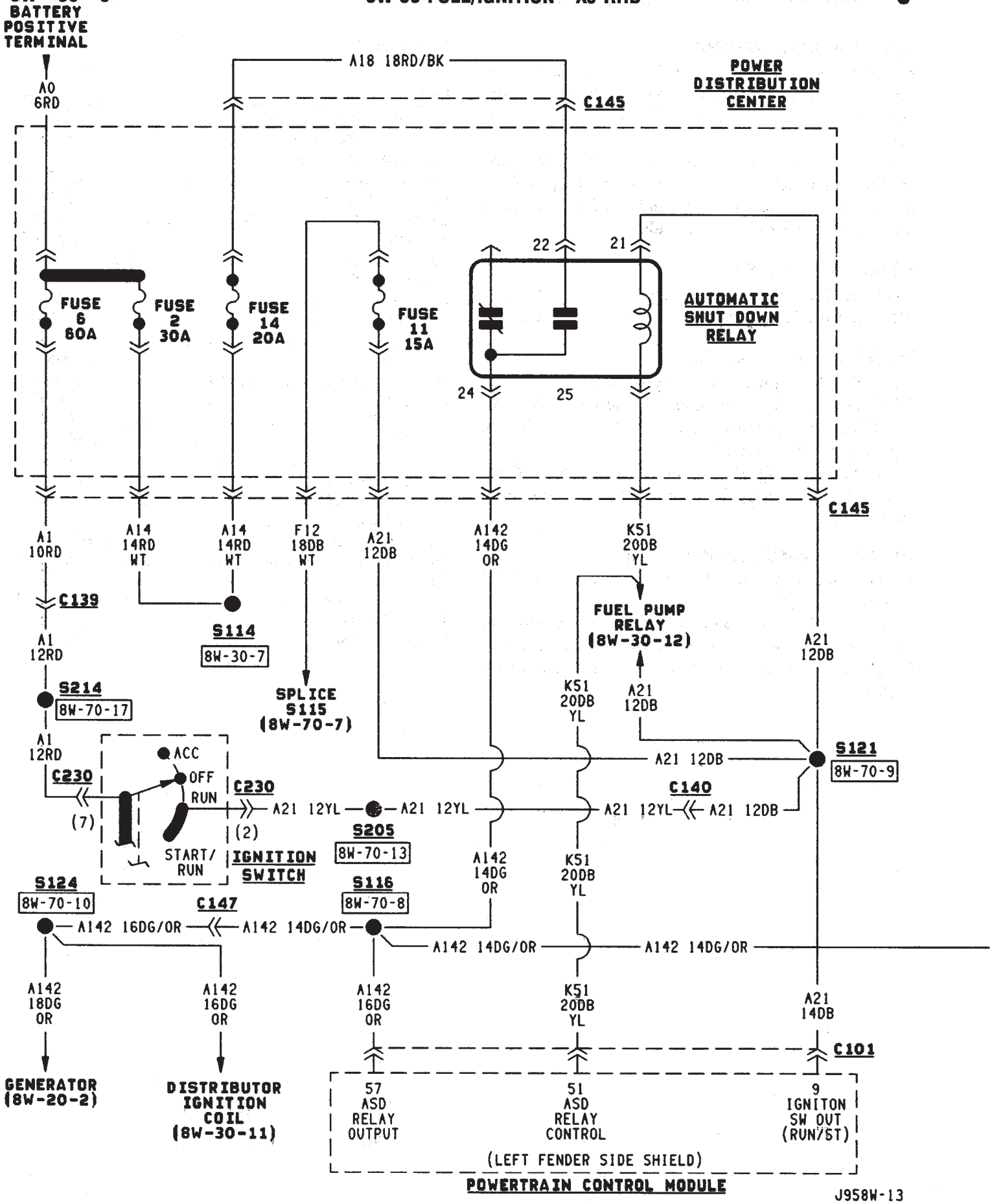
BATTERY POSITIVE TERMINAL
A0 6RD
A18 18RD/BK
C145
POWER DISTRIBUTION CENTER
FUSE 6 60A
FUSE 2 30A
FUSE 14 20A
FUSE 11 15A
22
21
24
25
AUTOMATIC SHUT DOWN RELAY
C145
A1 10RD
A14 14RD WT
A14 14RD WT
F12 18DB WT
A21 12DB
A142 14DG OR
K51 20DB YL
C139
A1 12RD
S114
8W-30-7
FUEL PUMP RELAY (8W-30-12)
A21 12DB
S214
8W-70-17
SPLICE S115 (8W-70-7)
K51 20DB YL
A21 12DB
A1 12RD
ACC
OFF
RUN
START/ RUN
C230
(7)
(2)
IGNITION SWITCH
A21 12YL
A21 12YL
A21 12YL
A21 12DB
S121
8W-70-9
C140
S205
8W-70-13
A142 14DG OR
K51 20DB YL
S124
8W-70-10
C147
S116
8W-70-8
A142 16DG/OR
A142 14DG/OR
A142 14DG/OR
A142 14DG/OR
A142 18DG OR
A142 16DG OR
A142 16DG OR
K51 20DB YL
A21 14DB
C101
GENERATOR (8W-20-2)
DISTRIBUTOR IGNITION COIL (8W-30-11)
57 ASD RELAY OUTPUT
51 ASD RELAY CONTROL
9 IGNITON SW OUT (RUN/ST)
(LEFT FENDER SIDE SHIELD)
POWERTRAIN CONTROL MODULE
J958W-13

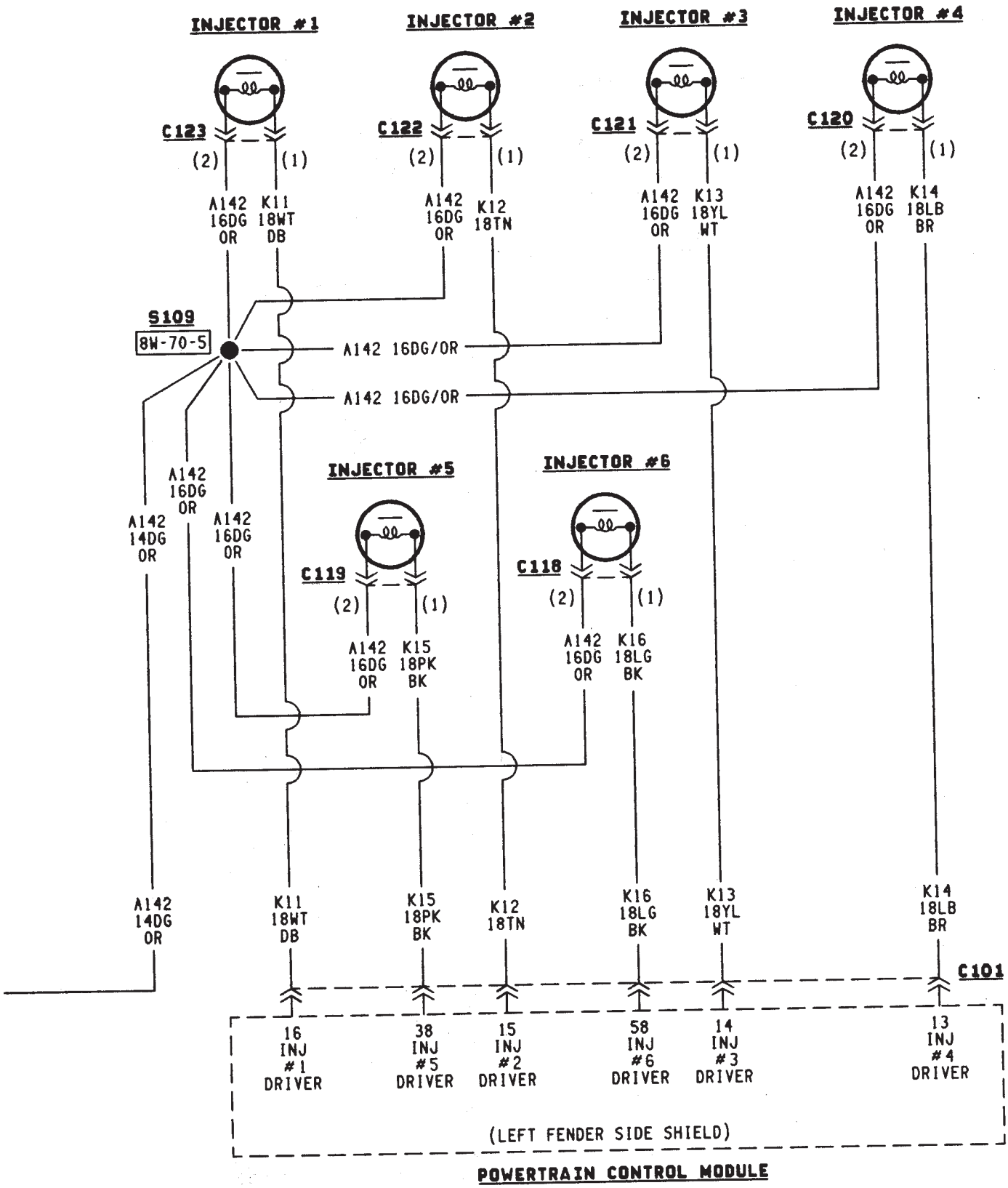
INJECTOR #1
INJECTOR #2
INJECTOR #3
INJECTOR #4
C123
C122
C121
C120
(2)
(1)
A142 16DG OR
K11 18WT DB
K12 18TN
K13 18YL WT
K14 18LB BR
S109
8W-70-5
A142 16DG/OR
A142 14DG OR
INJECTOR #5
INJECTOR #6
C119
C118
K15 18PK BK
K16 18LG BK
K11 18WT DB
K15 18PK BK
K12 18TN
K16 18LG BK
K13 18YL WT
K14 18LB BR
C101
16 INJ #1 DRIVER
38 INJ #5 DRIVER
15 INJ #2 DRIVER
58 INJ #6 DRIVER
14 INJ #3 DRIVER
13 INJ #4 DRIVER
(LEFT FENDER SIDE SHIELD)
POWERTRAIN CONTROL MODULE

J958W-13

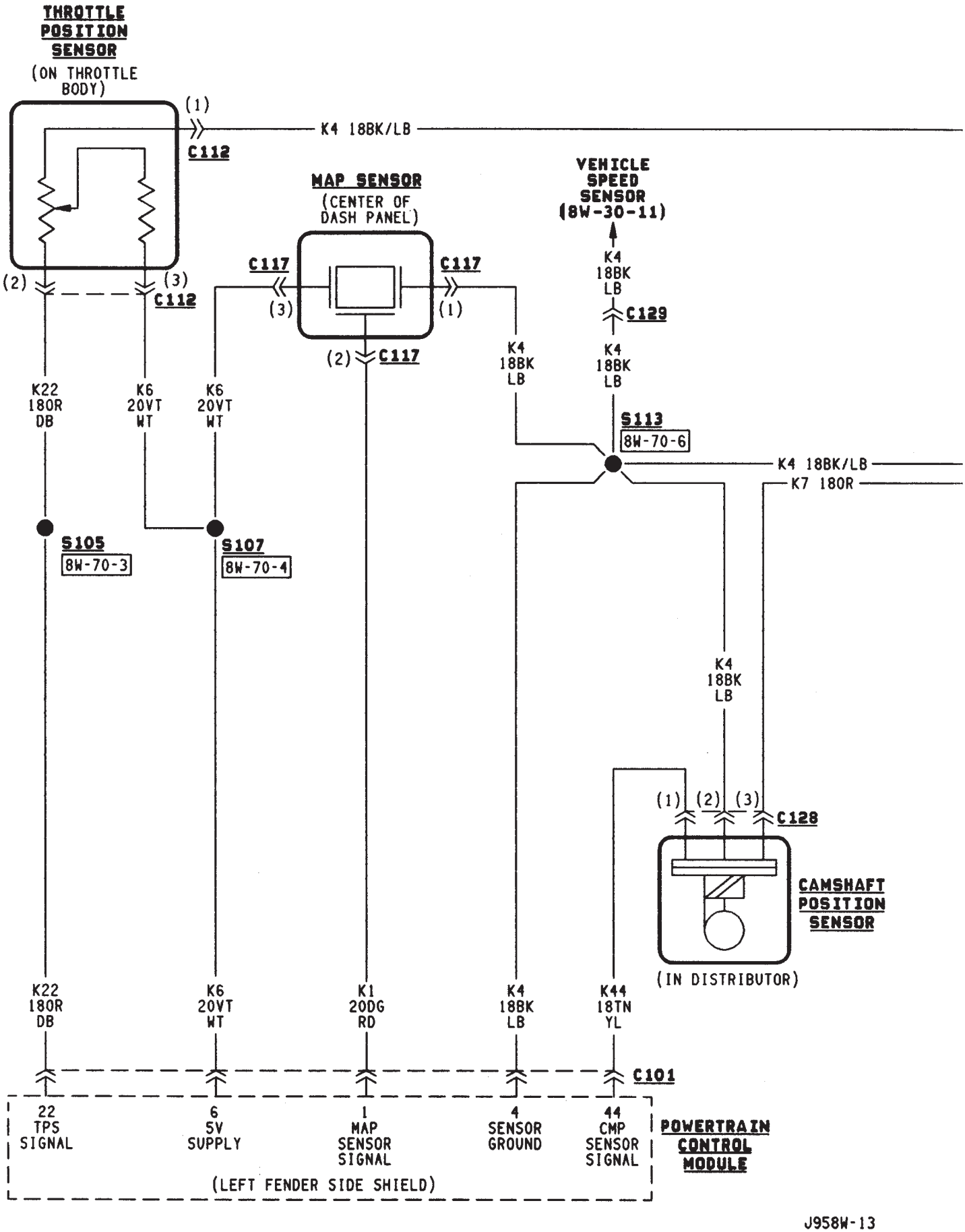
THROTTLE POSITION SENSOR
(ON THROTTLE BODY)
(1)
K4 18BK/LB
C112
(2)
(3)
C112
MAP SENSOR
(CENTER OF DASH PANEL)
C117
C117
(3)
(1)
(2)
C117
VEHICLE SPEED SENSOR (8W-30-11)
K4 18BK LB
C129
K4 18BK LB
K4 18BK LB
K22 18OR DB
K6 20VT WT
K6 20VT WT
S113
8W-70-6
K4 18BK/LB
K7 18OR
S105
8W-70-3
S107
8W-70-4
K4 18BK LB
(1) (2) (3)
C128
CAMSHAFT POSITION SENSOR
(IN DISTRIBUTOR)
K22 18OR DB
K6 20VT WT
K1 20DG RD
K4 18BK LB
K44 18TN YL
C101
22 TPS SIGNAL
6 5V SUPPLY
1 MAP SENSOR SIGNAL
4 SENSOR GROUND
44 CMP SENSOR SIGNAL
POWERTRAIN CONTROL MODULE
(LEFT FENDER SIDE SHIELD)

J958W-13

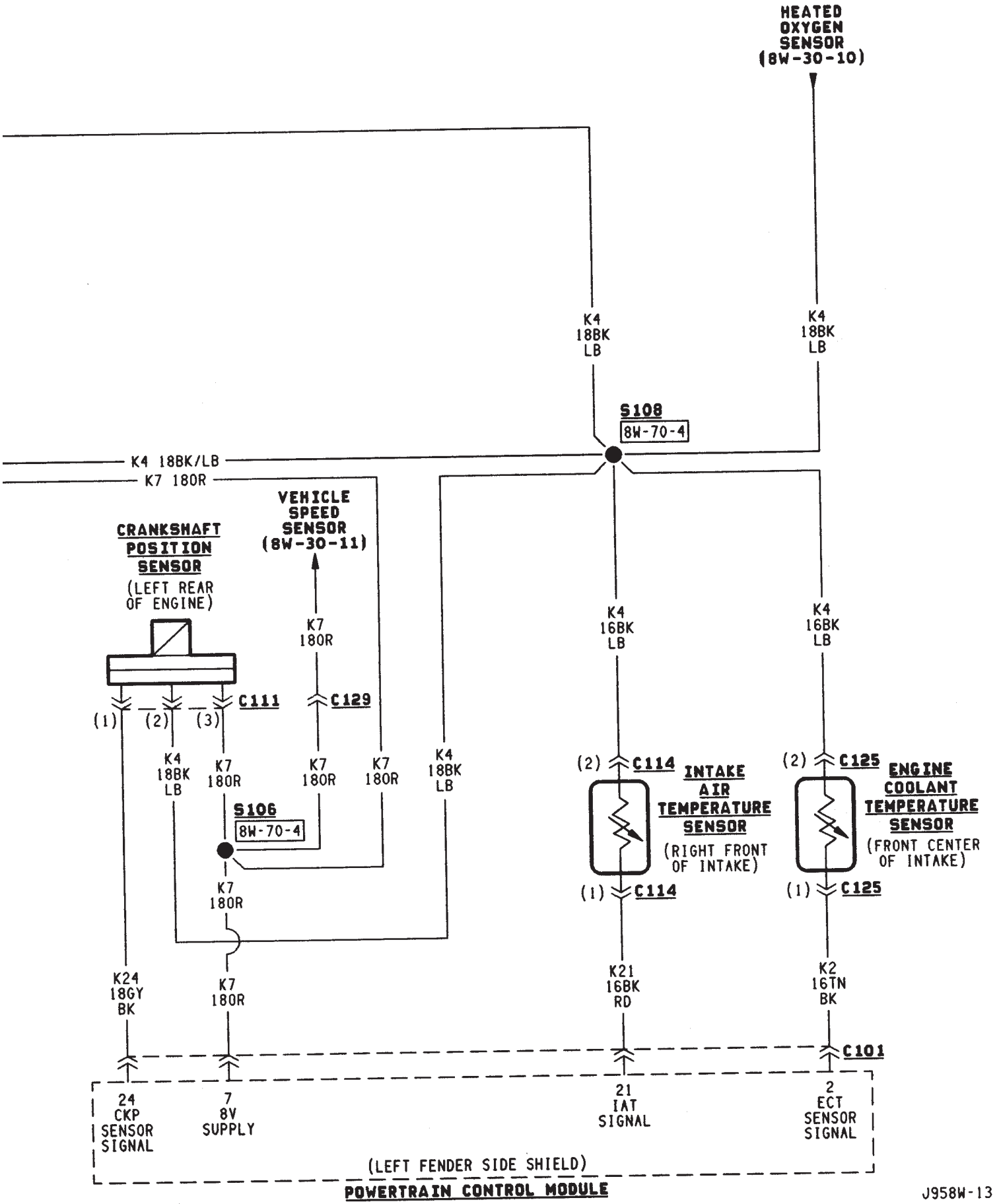
HEATED OXYGEN SENSOR (8W-30-10)
K4 18BK LB
K4 18BK LB
S108
8W-70-4
K4 18BK/LB
K7 18OR
VEHICLE SPEED SENSOR (8W-30-11)
CRANKSHAFT POSITION SENSOR
(LEFT REAR OF ENGINE)
K7 18OR
K4 16BK LB
K4 16BK LB
C111
C129
(1)
(2)
(3)
K4 18BK LB
K7 18OR
K7 18OR
K7 18OR
K4 18BK LB
S106
8W-70-4
(2) C114
INTAKE AIR TEMPERATURE SENSOR
(RIGHT FRONT OF INTAKE)
(2) C125
ENGINE COOLANT TEMPERATURE SENSOR
(FRONT CENTER OF INTAKE)
K7 18OR
(1) C114
(1) C125
K24 18GY BK
K7 18OR
K21 16BK RD
K2 16TN BK
C101
24 CKP SENSOR SIGNAL
7 8V SUPPLY
21 IAT SIGNAL
2 ECT SENSOR SIGNAL
(LEFT FENDER SIDE SHIELD)
POWERTRAIN CONTROL MODULE

J958W-13

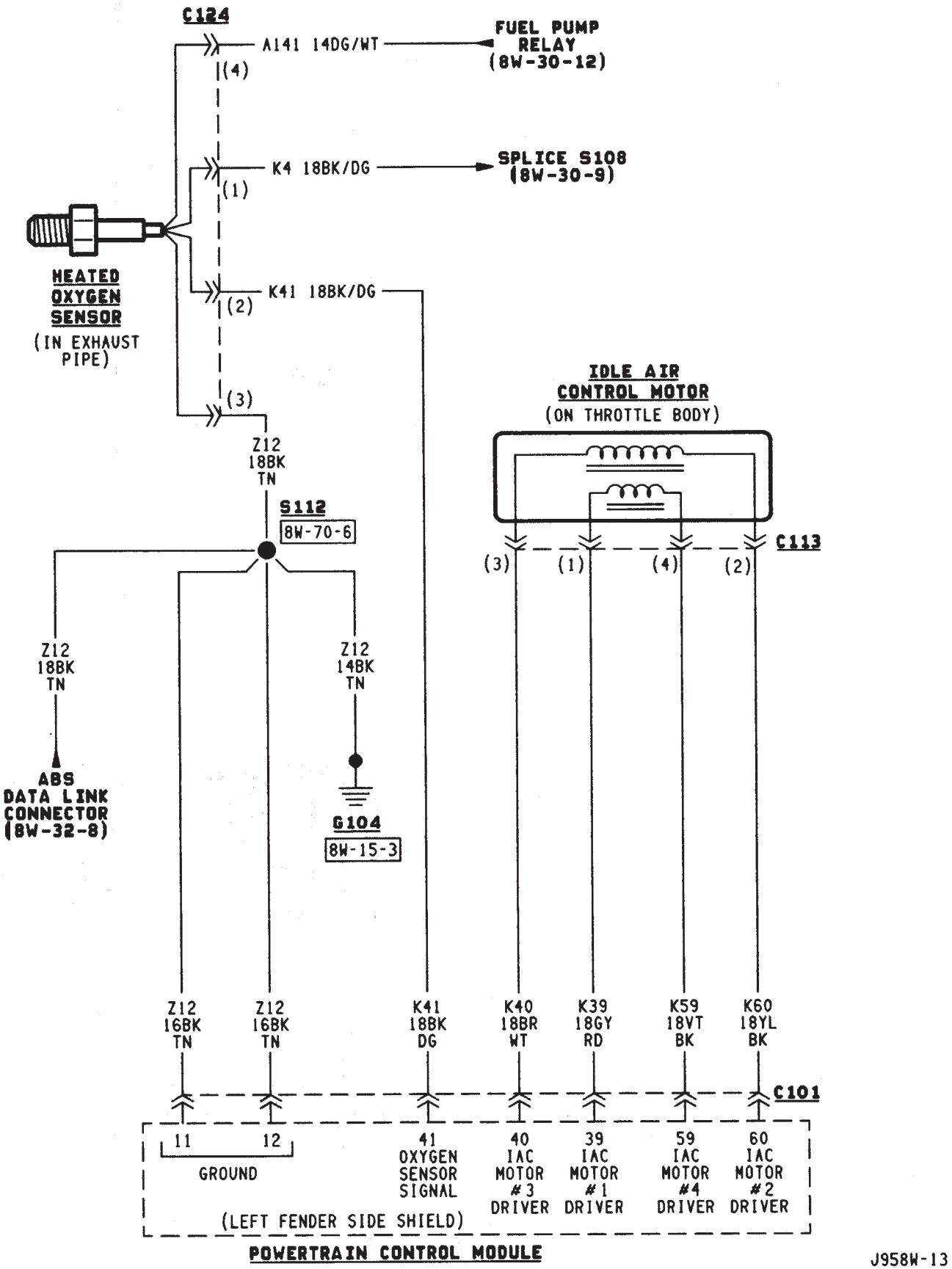
C124
A141 14DG/WT
FUEL PUMP RELAY (8W-30-12)
(4)
K4 18BK/DG
SPLICE S108 (8W-30-9)
(1)
HEATED OXYGEN SENSOR
(IN EXHAUST PIPE)
K41 18BK/DG
(2)
(3)
IDLE AIR CONTROL MOTOR
(ON THROTTLE BODY)
Z12 18BK TN
S112
8W-70-6
C113
(3) (1) (4) (2)
Z12 18BK TN
Z12 14BK TN
ABS DATA LINK CONNECTOR (8W-32-8)
G104
8W-15-3
Z12 16BK TN
Z12 16BK TN
K41 18BK DG
K40 18BR WT
K39 18GY RD
K59 18VT BK
K60 18YL BK
C101
11 12
GROUND
41 OXYGEN SENSOR SIGNAL
40 IAC MOTOR #3 DRIVER
39 IAC MOTOR #1 DRIVER
59 IAC MOTOR #4 DRIVER
60 IAC MOTOR #2 DRIVER
(LEFT FENDER SIDE SHIELD)
POWERTRAIN CONTROL MODULE

J958W-13

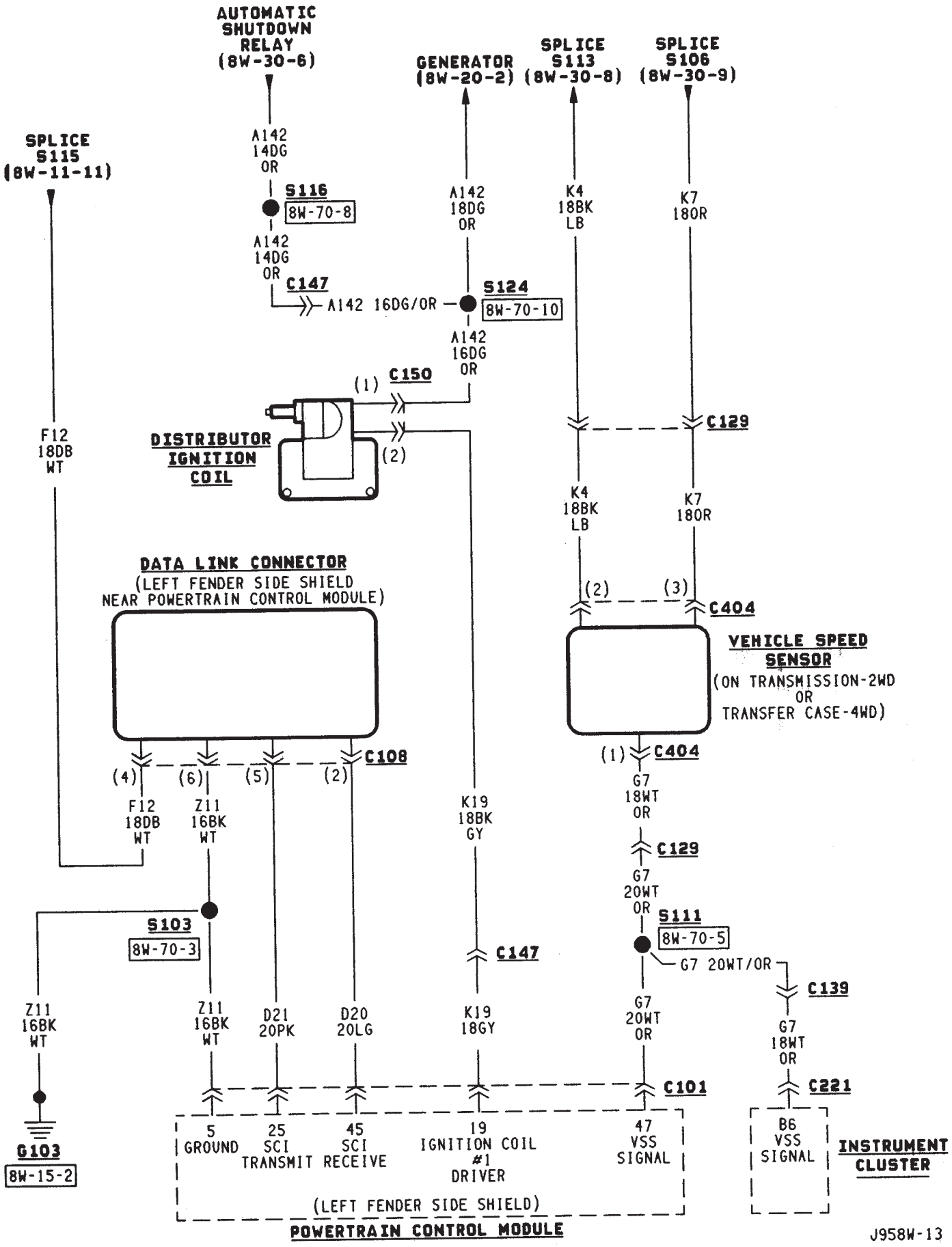
AUTOMATIC SHUTDOWN RELAY (8W-30-6)
GENERATOR (8W-20-2)
SPLICE S113 (8W-30-8)
SPLICE S106 (8W-30-9)
SPLICE S115 (8W-11-11)
A142 14DG OR
S116
8W-70-8
A142 14DG OR
C147
A142 16DG/OR
S124
8W-70-10
A142 16DG OR
A142 18DG OR
K4 18BK LB
K7 18OR
(1) C150
(2)
DISTRIBUTOR IGNITION COIL
C129
F12 18DB WT
K4 18BK LB
K7 18OR
DATA LINK CONNECTOR
(LEFT FENDER SIDE SHIELD NEAR POWERTRAIN CONTROL MODULE)
(2) (3) C404
VEHICLE SPEED SENSOR
(ON TRANSMISSION-2WD OR TRANSFER CASE-4WD)
(4) (6) (5) (2) C108
(1) C404
F12 18DB WT
Z11 16BK WT
K19 18BK GY
G7 18WT OR
C129
G7 20WT OR
S103
8W-70-3
S111
8W-70-5
G7 20WT/OR
C147
C139
Z11 16BK WT
Z11 16BK WT
D21 20PK
D20 20LG
K19 18GY
G7 20WT OR
G7 18WT OR
C101
C221
G103
8W-15-2
5 GROUND
25 SCI TRANSMIT
45 SCI RECEIVE
19 IGNITION COIL #1 DRIVER
47 VSS SIGNAL
B6 VSS SIGNAL
INSTRUMENT CLUSTER
(LEFT FENDER SIDE SHIELD)
POWERTRAIN CONTROL MODULE
J958W-13

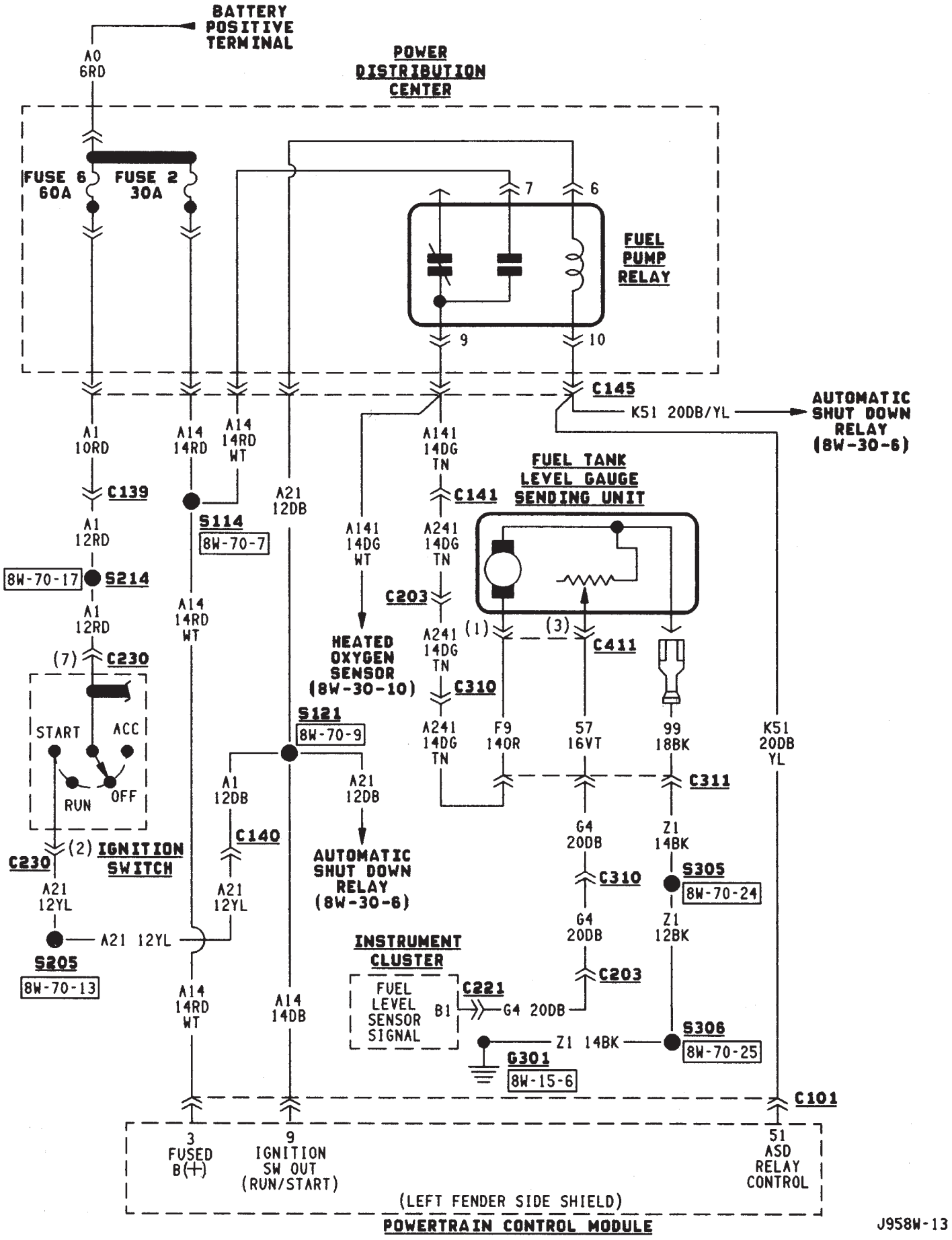
BATTERY POSITIVE TERMINAL
A0 6RD
POWER DISTRIBUTION CENTER
FUSE 6 60A
FUSE 2 30A
7
6
FUEL PUMP RELAY
9
10
C145
K51 20DB/YL
AUTOMATIC SHUT DOWN RELAY (8W-30-6)
A1 10RD
A14 14RD
A14 14RD WT
A21 12DB
A141 14DG TN
FUEL TANK LEVEL GAUGE SENDING UNIT
C139
S114
8W-70-7
C141
A1 12RD
8W-70-17
S214
A141 14DG WT
A241 14DG TN
C203
A1 12RD
A14 14RD WT
HEATED OXYGEN SENSOR (8W-30-10)
(1)
(3)
C411
(7)
C230
A241 14DG TN
C310
S121
8W-70-9
START
ACC
RUN
OFF
A241 14DG TN
F9 140R
57 16VT
99 18BK
K51 20DB YL
C311
A1 12DB
A21 12DB
C140
G4 20DB
Z1 14BK
C230
(2) IGNITION SWITCH
AUTOMATIC SHUT DOWN RELAY (8W-30-6)
C310
S305
8W-70-24
A21 12YL
A21 12YL
G4 20DB
Z1 12BK
S205
8W-70-13
A21 12YL
INSTRUMENT CLUSTER
C203
A14 14RD WT
A14 14DB
FUEL LEVEL SENSOR SIGNAL
B1
C221
G4 20DB
S306
8W-70-25
Z1 14BK
G301
8W-15-6
C101
3 FUSED B(+)
9 IGNITION SW OUT (RUN/START)
51 ASD RELAY CONTROL
(LEFT FENDER SIDE SHIELD)
POWERTRAIN CONTROL MODULE
J958W-13

TRANSMISSION CONTROLS

FOUR-WHEEL DRIVE (4WD) SWITCH

When the 4WD switch closes, circuit Z1 provides ground for the 4WD indicator lamp in the instrument cluster. Circuit F87 connects to the instrument cluster and supplies battery voltage to the 4WD indicator lamp. Circuit 107 connects the indicator lamp to the 4WD switch. Circuit 106 connects the lamp to the instrument cluster and circuit F87.

TRANSMISSION COMFORT SWITCH

Circuit T17 from fuse 12 in the Power Distribution Center (PDC) supplies battery voltage to the transmission comfort switch. Circuit Z1 provides ground for the switch. Circuit T177 Connects the switch to the Transmission Control Module (TCM).

TRANSMISSION CONTROL MODULE

Vehicles equipped with the 4.0L engine have electronically controlled solenoids in the automatic transmission valve body.

The transmission control module (TCM) receives inputs from the throttle position sensor (TPS) on circuit K22 and the stop lamp switch on circuit K29. Circuit K4 connects to the TCM to provide ground for the TPS signal.

The TCM receives the transmission output speed sensor signal on circuit 505. Circuit A14 from fuse 2 in the Power Distribution Center (PDC) supplies battery voltage to the TCM. Circuit T17 from fuse 12 in the PDC also connects to the TCM. Circuit Z12 provides ground for the TCM.

The TCM powers the S1 solenoid on circuit 510, the S2 solenoid on circuit 509, and the S3 solenoid on circuit 508. Circuit Z12 provides ground for the S1, S2, and S3 solenoids.

Circuits 506 and 507 from the Park/Neutral position switch connect to the TCM. Circuits 506 and 507 tell the TCM what drive range the transmission is in.

DATA LINK CONNECTOR

Circuit 137 from the TCM connects to the data link connector. Circuit F39 from fuse 5 in the PDC supplies power to the data link connector. Circuit Z12 provides ground for the data link connector.

DIAGRAM INDEX

Component	Page
ABS Data Link Connector	8W-31-3
4-WD Indicator Lamp	8W-31-4
4-WD Indicator Switch	8W-31-4
Fuse 2 (PDC)	8W-31-4
Fuse 6 (PDC)	8W-31-2, 3
Fuse 11 (PDC)	8W-31-3
Fuse 12 (PDC)	8W-31-2
Ignition Switch	8W-31-2, 3
Park/Neutral Position Switch	8W-31-3
Telltale Connector (Instrument Cluster)	8W-31-4
Transmission Comfort Switch	8W-31-2
Transmission Control Module	8W-31-2, 3, 4
Transmission Valve Body Solenoids	8W-31-4

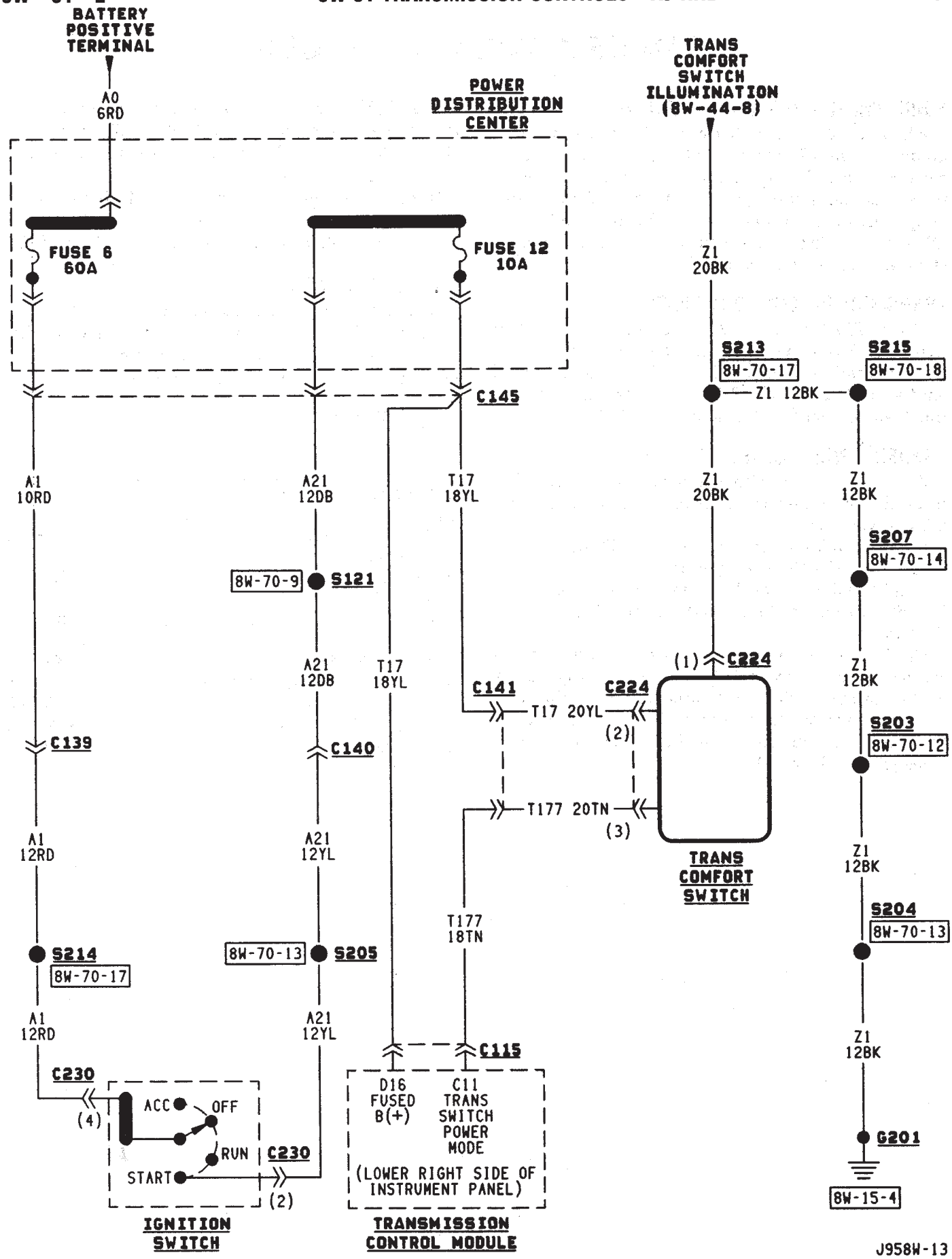
BATTERY POSITIVE TERMINAL
A0 6RD
POWER DISTRIBUTION CENTER
FUSE 6 60A
FUSE 12 10A
TRANS COMFORT SWITCH ILLUMINATION (8W-44-8)
Z1 20BK
S213 8W-70-17
S215 8W-70-18
Z1 12BK
C145
A1 10RD
A21 12DB
T17 18YL
Z1 20BK
Z1 12BK
S207 8W-70-14
8W-70-9 S121
A21 12DB
T17 18YL
C141
T17 20YL
C224
(1) C224
(2)
Z1 12BK
C139
C140
T177 20TN
(3)
S203 8W-70-12
A1 12RD
A21 12YL
TRANS COMFORT SWITCH
Z1 12BK
T177 18TN
S214 8W-70-17
8W-70-13 S205
S204 8W-70-13
A1 12RD
A21 12YL
C115
Z1 12BK
C230
D16 FUSED B(+)
C11 TRANS SWITCH POWER MODE
(LOWER RIGHT SIDE OF INSTRUMENT PANEL)
(4)
ACC
OFF
RUN
START
C230
(2)
G201
8W-15-4
IGNITION SWITCH
TRANSMISSION CONTROL MODULE
J958W-13

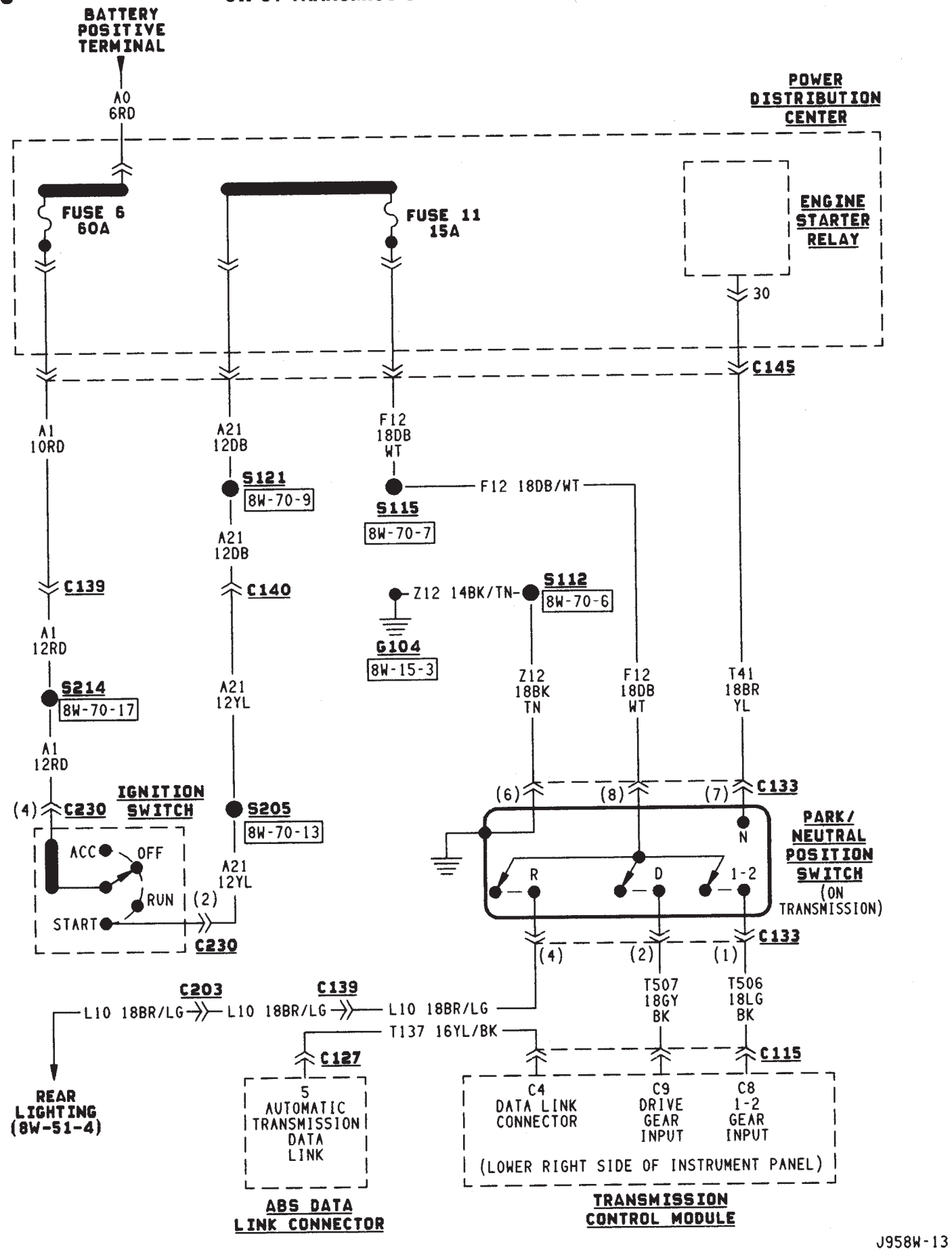
BATTERY POSITIVE TERMINAL
A0 6RD
POWER DISTRIBUTION CENTER
FUSE 6 60A
FUSE 11 15A
ENGINE STARTER RELAY
30
C145
A1 10RD
A21 12DB
F12 18DB WT
S121
8W-70-9
S115
8W-70-7
F12 18DB/WT
A21 12DB
C139
C140
Z12 14BK/TN
S112
8W-70-6
G104
8W-15-3
A1 12RD
S214
8W-70-17
A21 12YL
Z12 18BK TN
F12 18DB WT
T41 18BR YL
A1 12RD
(4) C230
IGNITION SWITCH
S205
8W-70-13
(6)
(8)
(7) C133
PARK/ NEUTRAL POSITION SWITCH (ON TRANSMISSION)
ACC
OFF
RUN
START
(2)
A21 12YL
C230
N
R
D
1-2
(4)
(2)
(1) C133
C203
C139
L10 18BR/LG
L10 18BR/LG
L10 18BR/LG
T137 16YL/BK
T507 18GY BK
T506 18LG BK
C127
C115
REAR LIGHTING (8W-51-4)
5 AUTOMATIC TRANSMISSION DATA LINK
C4 DATA LINK CONNECTOR
C9 DRIVE GEAR INPUT
C8 1-2 GEAR INPUT
(LOWER RIGHT SIDE OF INSTRUMENT PANEL)
ABS DATA LINK CONNECTOR
TRANSMISSION CONTROL MODULE

J958W-13

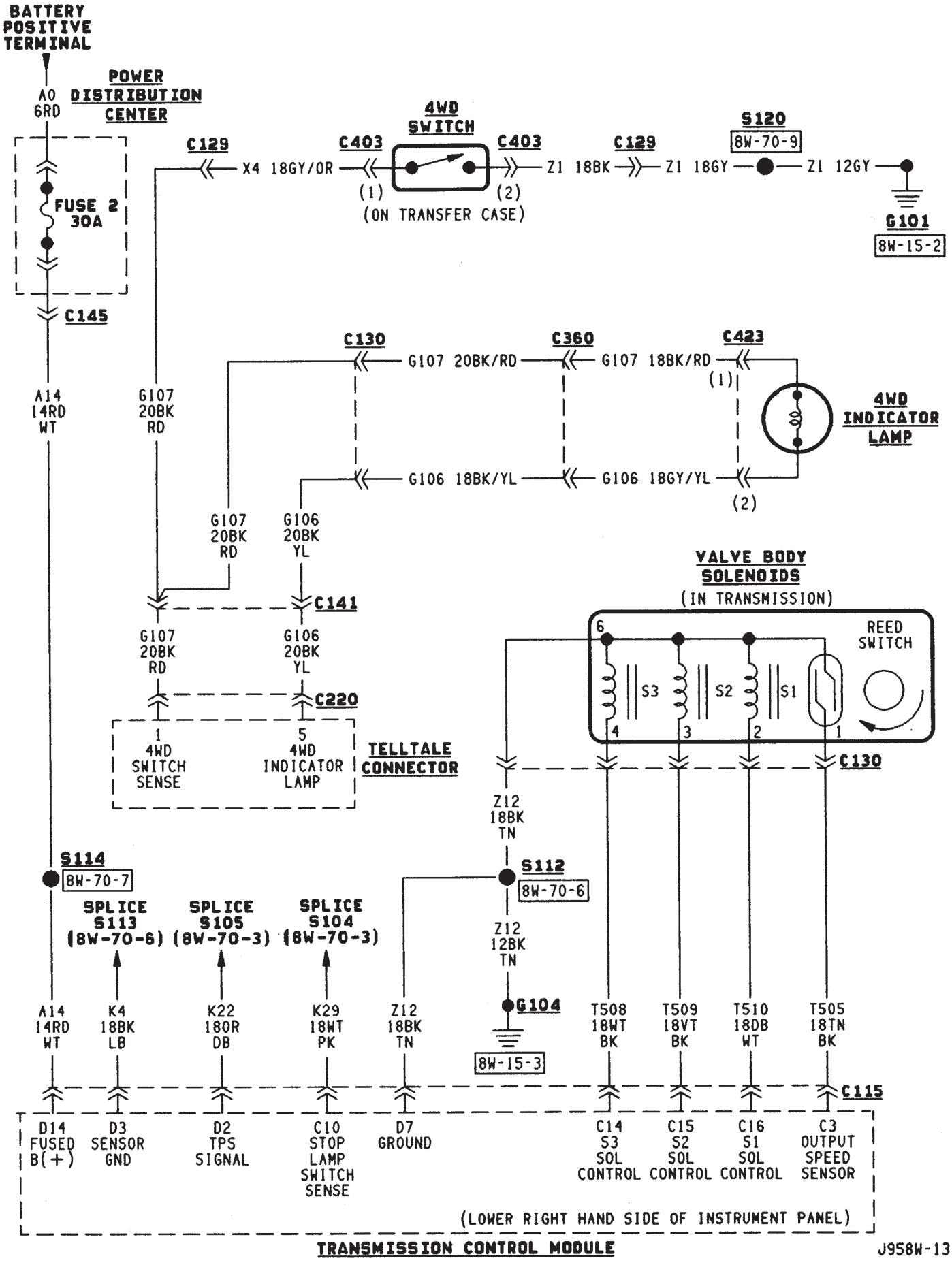
BATTERY POSITIVE TERMINAL
A0 6RD
POWER DISTRIBUTION CENTER
FUSE 2 30A
C145
A14 14RD WT
C129
X4 18GY/OR
C403
4WD SWITCH
(1)
(2)
(ON TRANSFER CASE)
C403
Z1 18BK
C129
Z1 18GY
S120
8W-70-9
Z1 12GY
G101
8W-15-2
C130
G107 20BK/RD
C360
G107 18BK/RD
C423
(1)
4WD INDICATOR LAMP
G106 18BK/YL
G106 18GY/YL
(2)
G107 20BK RD
G106 20BK YL
C141
G107 20BK RD
G106 20BK YL
C220
1 4WD SWITCH SENSE
5 4WD INDICATOR LAMP
TELLTALE CONNECTOR
VALVE BODY SOLENOIDS
(IN TRANSMISSION)
REED SWITCH
6
S3
S2
S1
4
3
2
1
C130
Z12 18BK TN
S112
8W-70-6
Z12 12BK TN
G104
8W-15-3
S114
8W-70-7
SPLICE S113 (8W-70-6)
SPLICE S105 (8W-70-3)
SPLICE S104 (8W-70-3)
A14 14RD WT
K4 18BK LB
K22 18OR DB
K29 18WT PK
Z12 18BK TN
T508 18WT BK
T509 18VT BK
T510 18DB WT
T505 18TN BK
C115
D14 FUSED B(+)
D3 SENSOR GND
D2 TPS SIGNAL
C10 STOP LAMP SWITCH SENSE
D7 GROUND
C14 S3 SOL CONTROL
C15 S2 SOL CONTROL
C16 S1 SOL CONTROL
C3 OUTPUT SPEED SENSOR
(LOWER RIGHT HAND SIDE OF INSTRUMENT PANEL)
TRANSMISSION CONTROL MODULE
J958W-13

ANTI-LOCK BRAKES

INDEX

	page		page
ABS Power Relay	1	Data Link Connector	2
ABS Pump Motor Relay	1	Diagram Index	3
ABS Warning Lamp	2	General Information	1
Acceleration Switch	1	Hydraulic Control Unit	2
Brake Pedal Travel Sensor	2	Pump Motor Speed Sensor	2
Brake Switch Input	2	Wheel Speed Sensors	1

GENERAL INFORMATION

Three fuses supply power for the Anti-Lock Brake System (ABS); fuses 6 and 10 in the Power Distribution Center (PDC) and fuse 2 in the fuse block. Fuses 6 and 10 in the PDC are connected directly to battery voltage and are HOT all times. Fuse 2 in the fuse block is HOT when the ignition switch is the RUN Position.

In the RUN position, the ignition switch connects circuit A1 from fuse 6 in the PDC with circuit A38. Circuit A38 connects to a bus bar in the fuse block. The bus bar feeds circuit B236 through fuse 2. Fuse 2 is a 2 amp fuse.

Circuit B236 connects to the coil side of the ABS power relay and cavity 53 of the ABS control module.

Circuit Z1 provides ground for the ABS control module. Circuit Z1 connects to cavities 1 and 19 of the ABS control module.

Refer to group 5, Brakes for operational descriptions of ABS system components.

WHEEL SPEED SENSORS

The all wheel anti-lock system uses four wheel speed sensors; one for each wheel. Each sensor converts wheel speed into an electrical signal that it transmits to the ABS control module. A pair of twisted wires connect to each sensor to provide signals to the ABS control module.

Circuits B6 and B7 provide signals to ABS control module from the right front wheel speed sensor. Circuit B6 which provides the LOW signal connects to cavity 29 of the ABS control module. Circuit B7 connects to cavity 47 of the module and provides the HIGH signal.

Circuits B8 and B9 provide signals to ABS control module from the left front wheel speed sensor. Circuit B8, which provides the LOW signal, connects to cavity 30 of the ABS control module. Circuit B9 connects to cavity 48 of the module and provides the HIGH signal.

Circuits B1 and B2 provide signals to ABS control module from the right rear wheel speed sensor. Circuit B1 which provides the LOW signal connects to cavity 45 of the ABS control module. Circuit B2 connects to cavity 27 of the module and provides the HIGH signal.

Circuits B4 and B3 provide signals to ABS control module from the left rear wheel speed sensor. Circuit B3, which provides the LOW signal, connects to cavity 28 of the ABS control module. Circuit B4 connects to cavity 46 of the module and provides the HIGH signal.

ACCELERATION SWITCH

During four-wheel drive operation, the acceleration switch provides deceleration data to the ABS control module. Refer to Group 5, Brakes for additional information.

Circuits B515, B516, and B517 connect the acceleration sensor to the ABS control module. Circuits B515 and B516 provide switch states while circuit B517 provides ground. At the ABS control module circuit B515 connects to cavity 25, circuit B516 connects to cavity 43 and circuit B517 connects to cavity 26.

ABS POWER RELAY

The ABS power relay is located in the power distribution center (PDC). When the ABS module grounds the ABS power relay on circuit B207, the relay switches to connect circuit A20 from PDC fuse 10 to circuit B235. Circuit B236 from fuse 7 in the fuse block splices to feed the coil side of the ABS power relay. Circuit B207 connects to cavity 34 of the ABS control module.

Circuit B235 is double crimped at the ABS power relay. One branch of circuit B235 supplies power to the coil side of the ABS pump motor relay. The other branch of circuit B235 splices to cavities 3 and 33 of the ABS control module and to the hydraulic control unit.

ABS PUMP MOTOR RELAY

The ABS pump motor relay in the power distribution center (PDC) supplies voltage to the ABS pump motor. When the ABS power relay energizes, circuit B235 supplies battery voltage to the coil side of the

ABS pump motor relay. The ABS control module provides ground for the relay on circuit B116. Circuit B116 connects to cavity 15 of the ABS control module.

When the ABS pump motor energizes, it connects circuit A10 from PDC fuse 8 to circuit B233. Circuit B233 supplies battery voltage to the pump motor. Circuit Z12 provides ground for the pump motor.

PUMP MOTOR SPEED SENSOR

The input from the pump motor speed sensor tells the ABS control module that the pump is operating. Circuits B219 and B220 from the control module connect to the speed sensor.

BRAKE SWITCH INPUT

Circuit L50 from the stop lamp provides the brake switch input to the ABS control module. When the brake pedal is depressed, the stop lamp switch closes to supply battery voltage from circuit L9 to circuit L50. Circuit L50 connects to cavity 32 of the ABS control module. Circuit L9 originates at fuse 4 in the Power Distribution Center (PDC).

HYDRAULIC CONTROL UNIT

When the ABS power relay energizes, two branches of circuit B235 splice to supply voltage to the isolation and decay solenoids in the hydraulic control unit. The hydraulic control unit contains three separate isolation solenoids and three separate dump solenoids. The ABS control module activates the decay and isolation solenoids by providing separate ground paths for each.

The ABS module provides a ground path for the rear isolation solenoid on circuit B251. Circuit B251 connects to cavity 54 of the ABS control module.

For the right front isolation solenoid, the ABS module provides a ground path on circuit B249. Circuit B249 connects to cavity 38 of the ABS control module.

On circuit B245, the ABS control module provides ground for the left front isolation solenoid. Circuit B245 connects to cavity 20 of the ABS control module.

The ABS control module provides a ground path for the rear dump solenoid on circuit B254. Circuit B254 connects to cavity 36 of the ABS control module.

For the right front dump solenoid, the ABS module provides a ground path on circuit B248. Circuit B248 connects to cavity 21 of the ABS control module.

On circuit B243, the ABS module provides ground for the left dump solenoid. Circuit B243 connects to cavity 2 of the ABS control module.

ABS WARNING LAMP

Circuit F87 provides power for the ABS warning lamp at the instrument cluster. Ground for the ABS warning lamp is provided by either the ABS control module or by the ABS power relay when the relay is not energized. The ABS control module illuminates the lamp by providing ground on circuit B205.

Circuit B205 splices to connect to circuit B235 through a diode. When the ABS power relay is not energized, it connects circuit B235 to circuit Z12. The ground path for the warning lamp is through the diode to circuit B235, through the ABS power relay to ground on circuit Z12.

The diode between circuit B205 and B235 prevents voltage from flowing to the ABS control module when the ABS power relay switches to supply power on circuit B235.

DATA LINK CONNECTOR

Circuit D1 from cavity 23 of the ABS control module receives data from the DRB scan tool through the data link connector. The ABS control module transmits data to the scan tool through the connector on circuit D2. Circuit D2 originates at cavity 42 of the ABS control module.

Through the data link connector, circuit Z12 provides ground for the DRB scan tool. Circuit Z12 terminates at the right rear of the engine.

Circuit A4 from fuse 7 in the Power Distribution Center (PDC) supplies power to fuse 13 in the PDC. Fuse 13 powers circuit F39 which supplies battery voltage to the scan tool through the diagnostic connector.

HELPFUL INFORMATION

- Check fuses 7 and 13 in the PDC.
- If the vehicle is equipped with an automatic transmission, circuits D1 and D2 are double crimped at the data link connector and connect to the Powertrain Control Module (PCM).

DIAGRAM INDEX

Component	Page
ABS Control Module	8W-32-4 thru 8
ABS Hydraulic Unit	8W-32-6
ABS Power Relay	8W-32-4
ABS Pump Motor	8W-32-4
ABS Pump Motor Relay	8W-32-5
Data Link Connector	8W-32-8
Diode	8W-32-6
Fuse 6 (PDC)	8W-32-5
Fuse 7 (PDC)	8W-32-8
Fuse 8 (PDC)	8W-32-5
Fuse 10 (PDC)	8W-32-4
Fuse 13 (PDC)	8W-32-8
Fuse 18 (Fuse Block)	8W-32-5
G-Sensor	8W-32-8
Ignition Switch	8W-32-5
Powertrain Control Module	8W-32-8
Telltale Connector (Instrument Cluster)	8W-32-6
Wheel Speed Sensors	8W-32-7

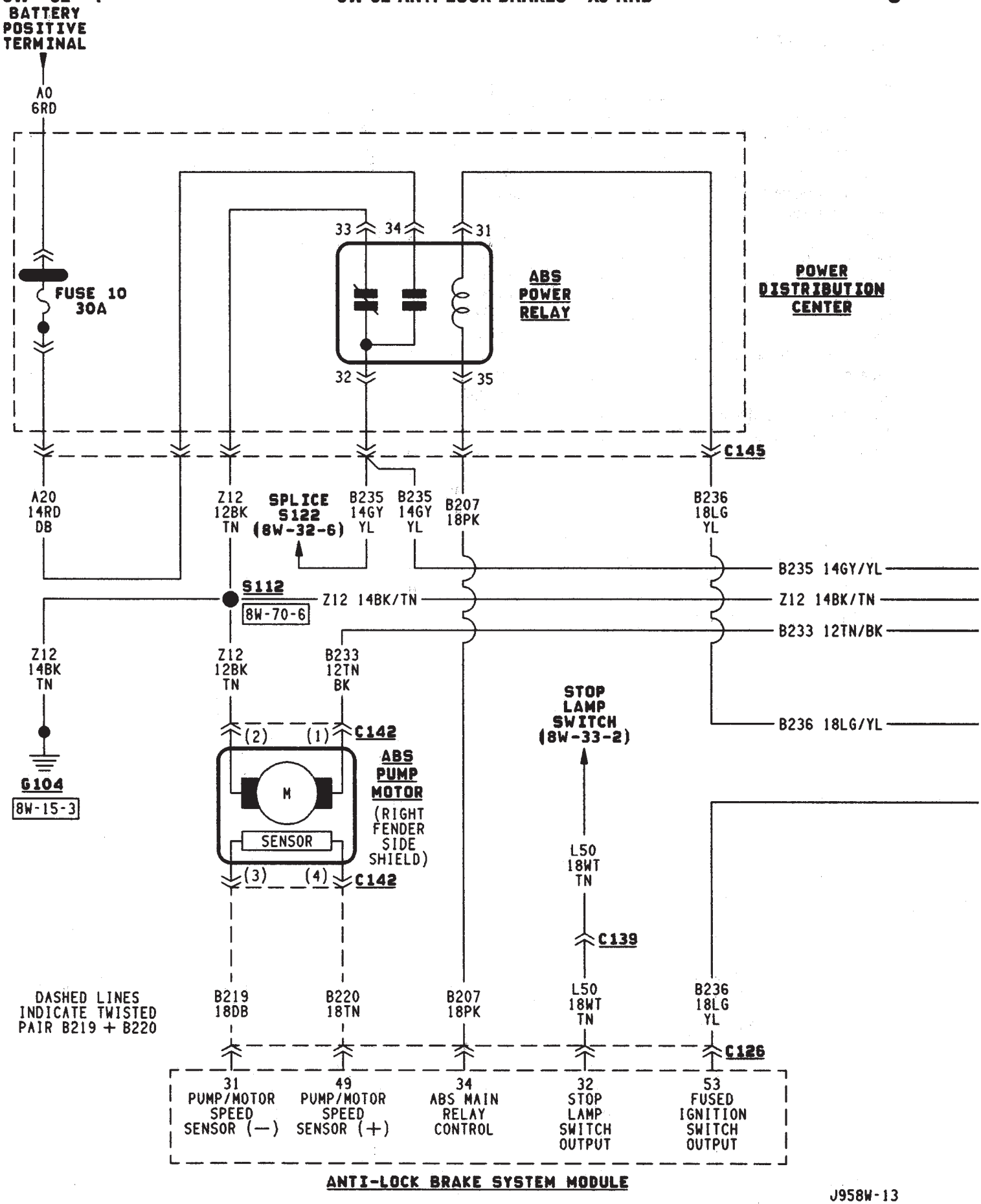
BATTERY POSITIVE TERMINAL
A0 6RD
FUSE 10 30A
33
34
31
32
35
ABS POWER RELAY
POWER DISTRIBUTION CENTER
C145
A20 14RD DB
Z12 12BK TN
SPLICE S122 (8W-32-6)
B235 14GY YL
B235 14GY YL
B207 18PK
B236 18LG YL
B235 14GY/YL
S112
Z12 14BK/TN
8W-70-6
Z12 14BK/TN
B233 12TN/BK
Z12 14BK TN
Z12 12BK TN
B233 12TN BK
B236 18LG/YL
STOP LAMP SWITCH (8W-33-2)
(2)
(1)
C142
ABS PUMP MOTOR
(RIGHT FENDER SIDE SHIELD)
M
SENSOR
G104
8W-15-3
(3)
(4)
C142
L50 18WT TN
C139
DASHED LINES INDICATE TWISTED PAIR B219 + B220
B219 18DB
B220 18TN
B207 18PK
L50 18WT TN
B236 18LG YL
C126
31 PUMP/MOTOR SPEED SENSOR (—)
49 PUMP/MOTOR SPEED SENSOR (+)
34 ABS MAIN RELAY CONTROL
32 STOP LAMP SWITCH OUTPUT
53 FUSED IGNITION SWITCH OUTPUT
ANTI-LOCK BRAKE SYSTEM MODULE
J958W-13

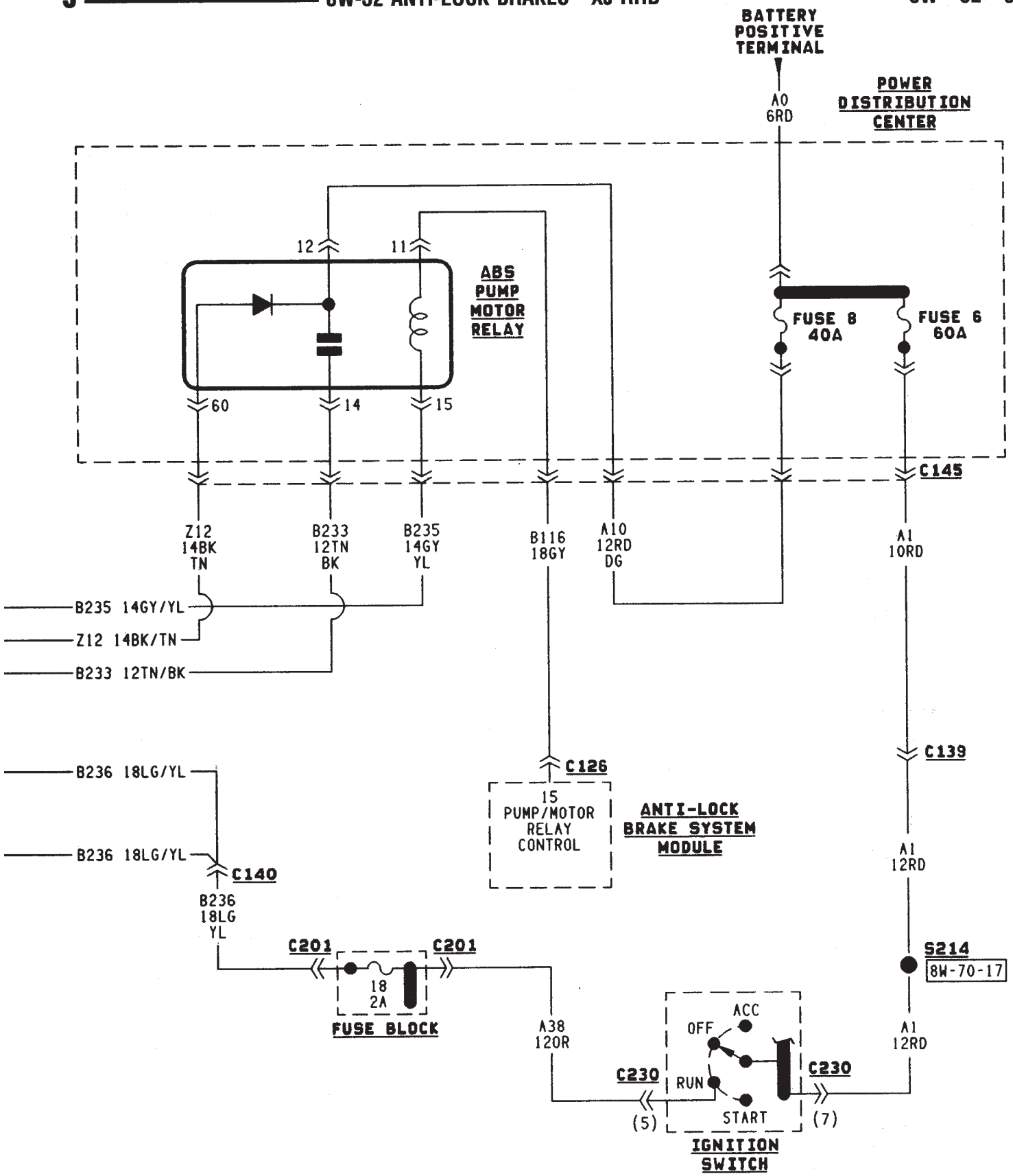
BATTERY POSITIVE TERMINAL
A0 6RD
POWER DISTRIBUTION CENTER
12
11
ABS PUMP MOTOR RELAY
60
14
15
FUSE 8 40A
FUSE 6 60A
C145
Z12 14BK TN
B233 12TN BK
B235 14GY YL
B116 18GY
A10 12RD DG
A1 10RD
B235 14GY/YL
Z12 14BK/TN
B233 12TN/BK
C126
C139
15 PUMP/MOTOR RELAY CONTROL
ANTI-LOCK BRAKE SYSTEM MODULE
A1 12RD
B236 18LG/YL
B236 18LG/YL
C140
B236 18LG YL
C201
C201
18 2A
FUSE BLOCK
S214
8W-70-17
A38 12OR
ACC
OFF
RUN
START
C230
C230
(5)
(7)
A1 12RD
IGNITION SWITCH

J958W-13

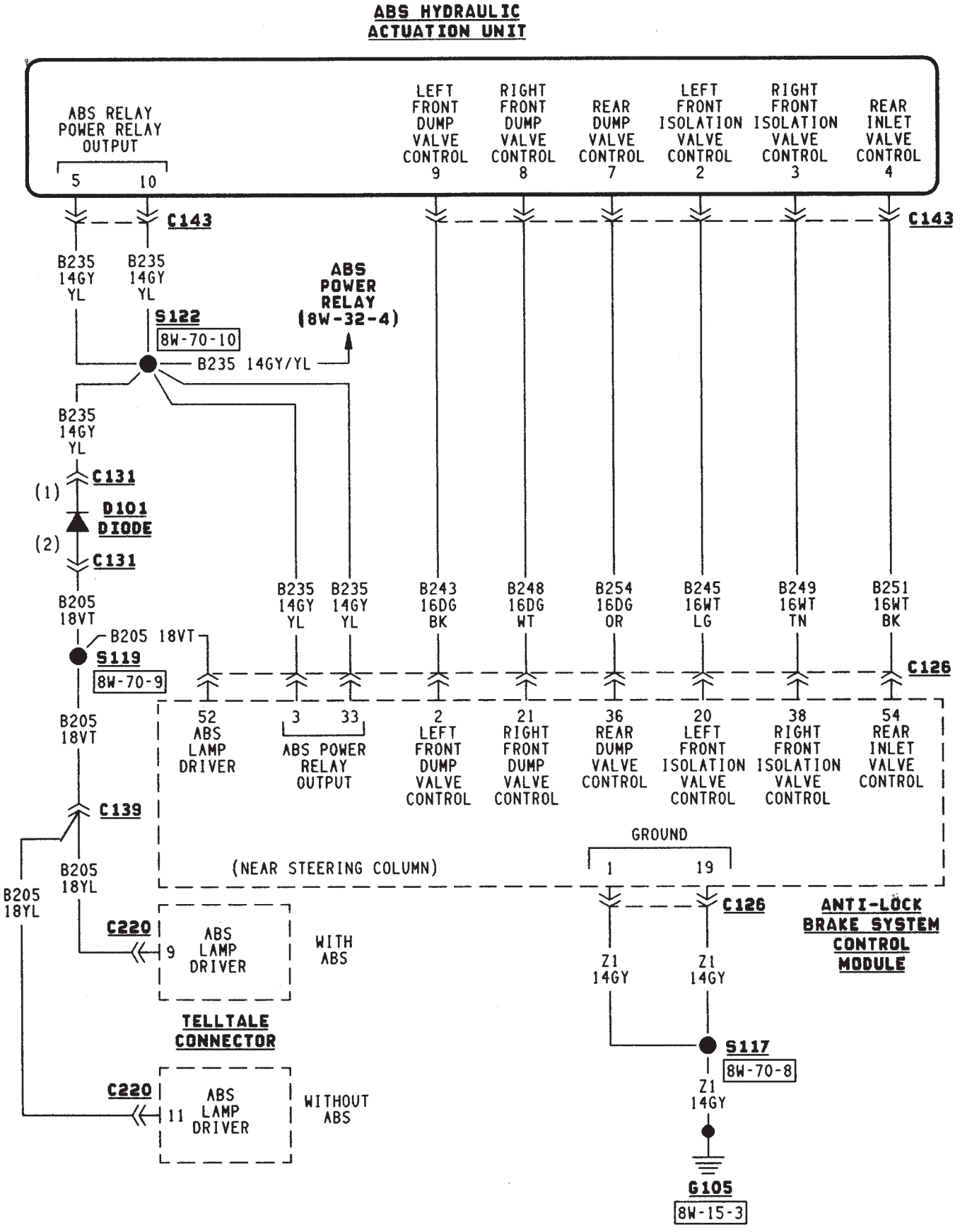
ABS HYDRAULIC ACTUATION UNIT
ABS RELAY POWER RELAY OUTPUT
5
10
LEFT FRONT DUMP VALVE CONTROL 9
RIGHT FRONT DUMP VALVE CONTROL 8
REAR DUMP VALVE CONTROL 7
LEFT FRONT ISOLATION VALVE CONTROL 2
RIGHT FRONT ISOLATION VALVE CONTROL 3
REAR INLET VALVE CONTROL 4
C143
C143
B235 14GY YL
B235 14GY YL
S122
8W-70-10
ABS POWER RELAY (8W-32-4)
B235 14GY/YL
B235 14GY YL
C131
(1)
D101 DIODE
(2)
C131
B205 18VT
B205 18VT
S119
8W-70-9
B235 14GY YL
B235 14GY YL
B243 16DG BK
B248 16DG WT
B254 16DG OR
B245 16WT LG
B249 16WT TN
B251 16WT BK
C126
52 ABS LAMP DRIVER
3
33
ABS POWER RELAY OUTPUT
2 LEFT FRONT DUMP VALVE CONTROL
21 RIGHT FRONT DUMP VALVE CONTROL
36 REAR DUMP VALVE CONTROL
20 LEFT FRONT ISOLATION VALVE CONTROL
38 RIGHT FRONT ISOLATION VALVE CONTROL
54 REAR INLET VALVE CONTROL
B205 18VT
C139
B205 18YL
B205 18YL
(NEAR STEERING COLUMN)
GROUND
1
19
C126
ANTI-LOCK BRAKE SYSTEM CONTROL MODULE
C220
9
ABS LAMP DRIVER
WITH ABS
Z1 14GY
Z1 14GY
TELLTALE CONNECTOR
S117
8W-70-8
Z1 14GY
C220
11
ABS LAMP DRIVER
WITHOUT ABS
G105
8W-15-3

J958W-13

DASHED LINES INDICATE
TWISTED PAIRS
B1+B2, B3+B4, B6+B7, B8+B9

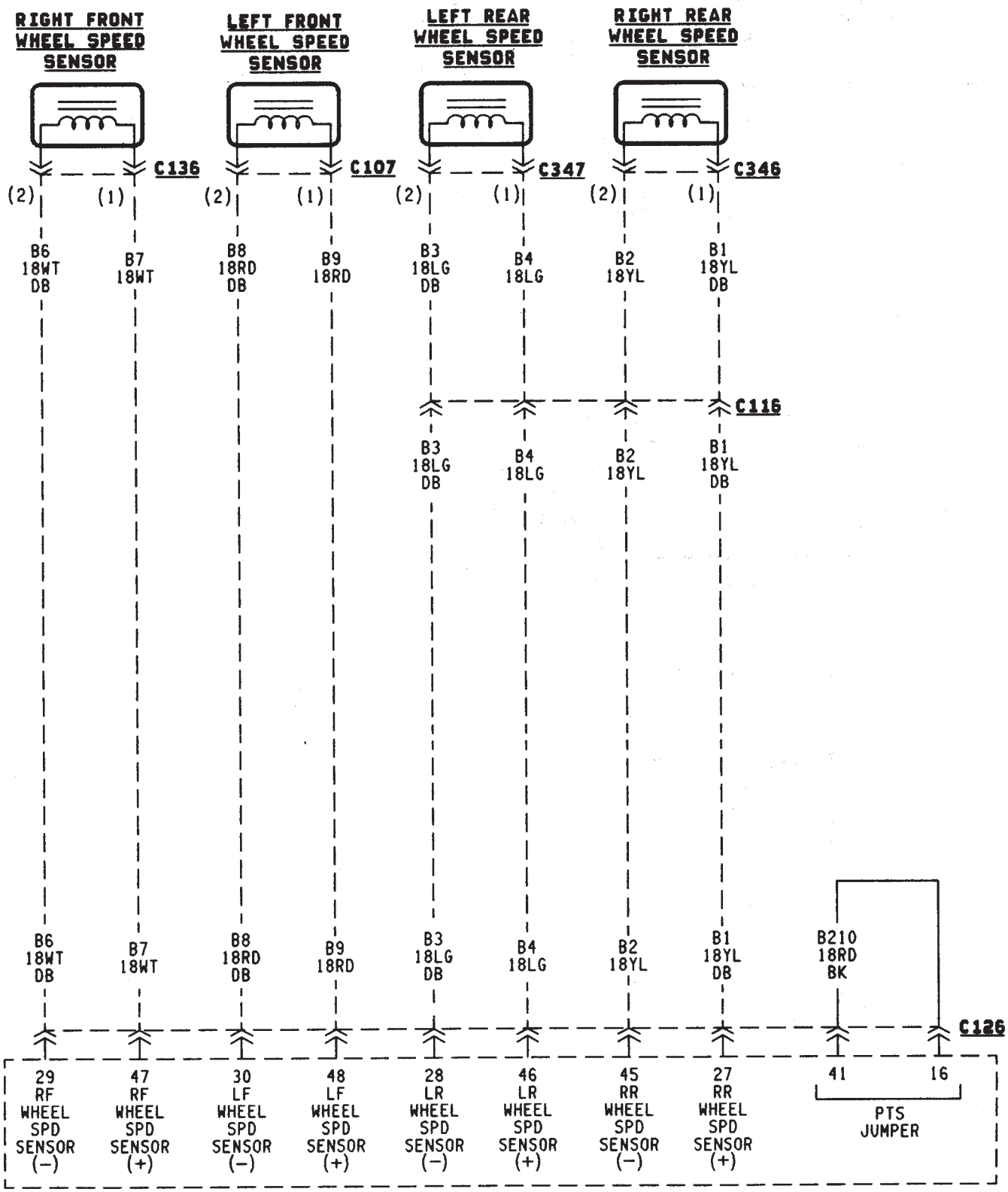

J958W-13

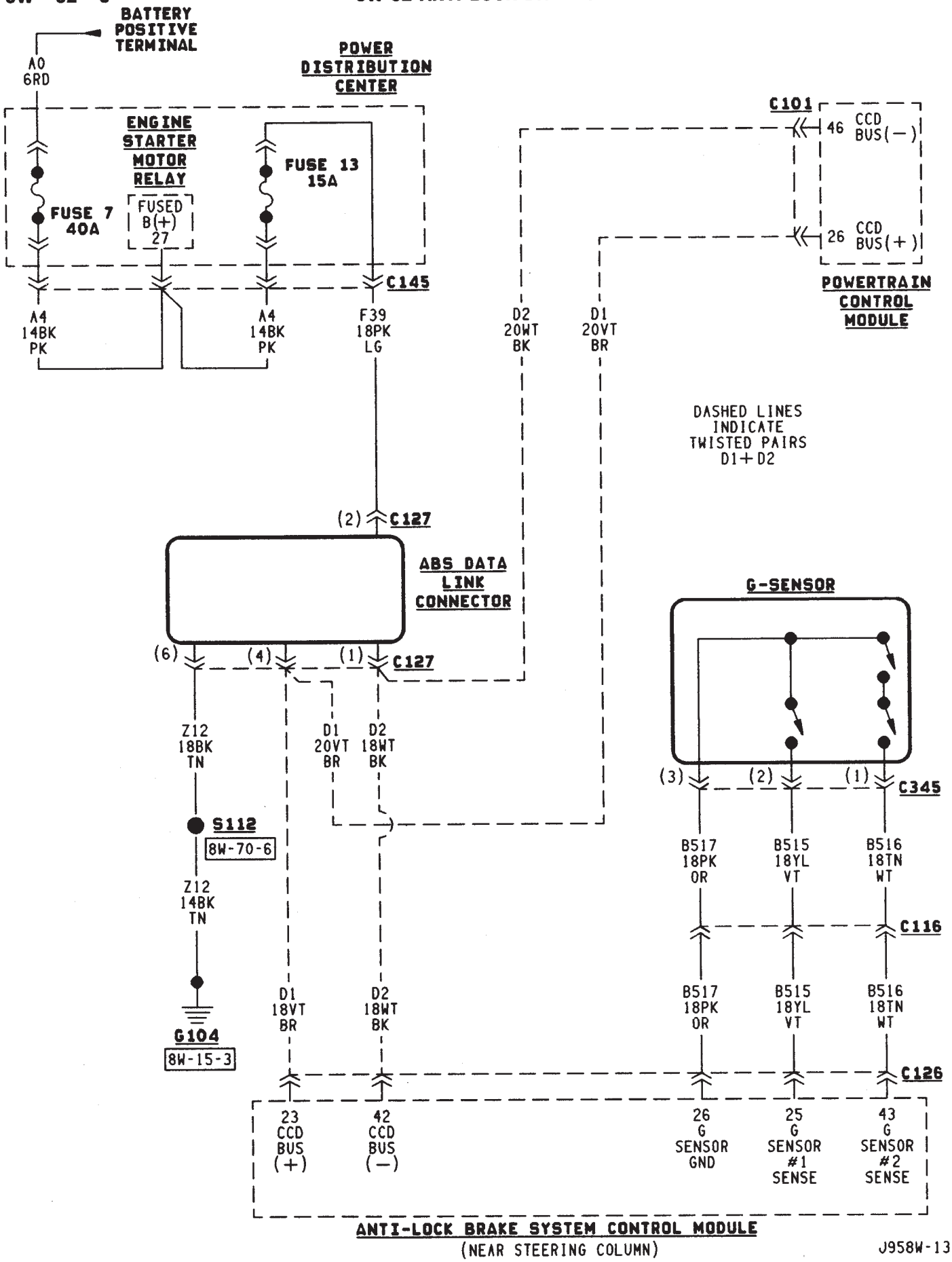
BATTERY POSITIVE TERMINAL
A0 6RD
POWER DISTRIBUTION CENTER
ENGINE STARTER MOTOR RELAY
FUSED B(+) 27
FUSE 7 40A
FUSE 13 15A
C145
A4 14BK PK
A4 14BK PK
F39 18PK LG
C101
46 CCD BUS(−)
26 CCD BUS(+)
POWERTRAIN CONTROL MODULE
D2 20WT BK
D1 20VT BR
DASHED LINES INDICATE TWISTED PAIRS D1+D2
(2) C127
ABS DATA LINK CONNECTOR
G-SENSOR
(6) (4) (1) C127
Z12 18BK TN
D1 20VT BR
D2 18WT BK
S112
8W-70-6
Z12 14BK TN
G104
8W-15-3
(3) (2) (1) C345
B517 18PK OR
B515 18YL VT
B516 18TN WT
C116
B517 18PK OR
B515 18YL VT
B516 18TN WT
D1 18VT BR
D2 18WT BK
C126
23 CCD BUS (+)
42 CCD BUS (−)
26 G SENSOR GND
25 G SENSOR #1 SENSE
43 G SENSOR #2 SENSE
ANTI-LOCK BRAKE SYSTEM CONTROL MODULE
(NEAR STEERING COLUMN)
J958W-13

VEHICLE SPEED CONTROL

VEHICLE SPEED CONTROL

The vehicle speed control system is operated by the Powertrain Control Module (PCM).

Circuit F12 from fuse 11 in the Power Distribution Center (PDC) supplies battery voltage to the vehicle speed control ON/OFF switch. Circuit A21 supplies voltage to fuse 11 when the ignition switch is in the START or RUN positions. In the START or RUN position the ignition switch connects circuit A21 with circuit A1. Fuse 6 in the PDC protects circuit A1.

The vehicle speed control ON/OFF switch supplies voltage to the SET/COAST and RESUME/ACCEL switches. Both switches send signals to the PCM (which supplies the ground path for the switches).

The PCM controls the vent and vacuum functions of the speed control servo on circuits V35 and V36. Depending on the signal it receives from the vehicle speed control switches, the PCM either applies vacuum to, or vents vacuum from, the servo. Circuit V36 from cavity 33 of the PCM sends the vacuum signal to the servo. Circuit V35 from cavity 53 sends the vent signal.

Circuit V32 signals to the PCM that the speed control switch is in the ON position. The V32 circuit connects to cavity 49 of the PCM.

Circuit V31 provides the SET/COAST signal to cavity 48 of the PCM. Circuit V33 sends the RESUME/ACCEL signal to cavity 50 of the PCM.

Circuit K29 connects to cavity 29 of the PCM and to ground through the stop lamp switch. The stop lamp switch OPENS when the operator depresses the brake pedal. The PCM disables speed control when the stop lamp switch opens. From the stop lamp switch, circuit Z1 provides ground for circuit K29.

DIAGRAM INDEX

Component	Page
ABS Control Module	8W-33-2
Fuse 4 (PDC)	8W-33-2
Fuse 6 (PDC)	8W-33-2
Fuse 11 (PDC)	8W-33-2
Ignition Switch	8W-33-2
Powertrain Control Module	8W-33-2, 3
Stop Lamp Switch	8W-33-2
Transmission Control Module	8W-33-2
Vehicle Speed Control Servo	8W-33-3
Vehicle Speed Control Switch	8W-33-3

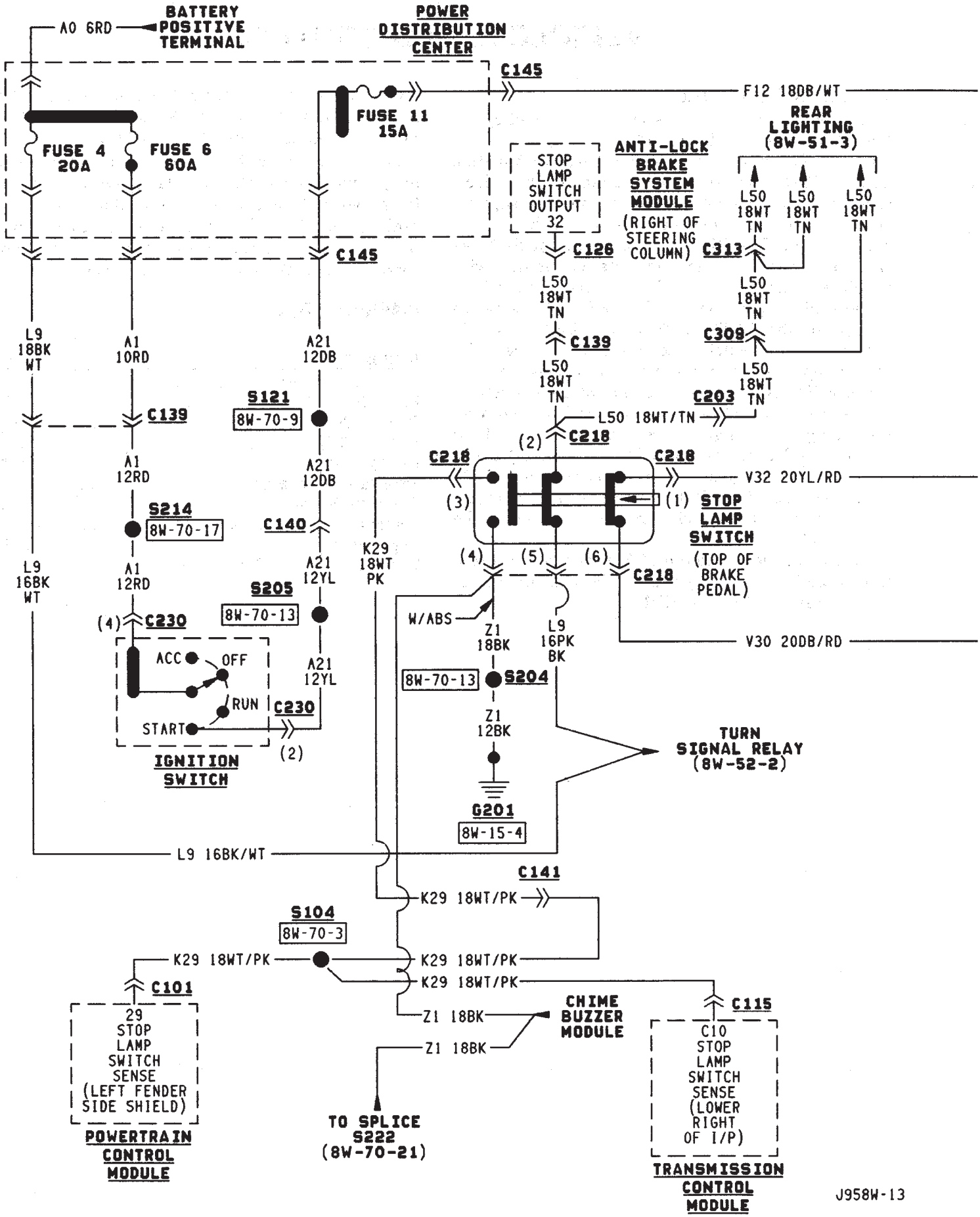
BATTERY POSITIVE TERMINAL
A0 6RD
POWER DISTRIBUTION CENTER
C145
FUSE 4 20A
FUSE 6 60A
FUSE 11 15A
F12 18DB/WT
REAR LIGHTING (8W-51-3)
STOP LAMP SWITCH OUTPUT 32
ANTI-LOCK BRAKE SYSTEM MODULE (RIGHT OF STEERING COLUMN)
C126
C313
L50 18WT TN
C139
C309
C203
L50 18WT/TN
C218
V32 20YL/RD
V30 20DB/RD
STOP LAMP SWITCH (TOP OF BRAKE PEDAL)
L9 18BK WT
A1 10RD
A21 12DB
S121
8W-70-9
A1 12RD
S214
8W-70-17
A21 12YL
S205
8W-70-13
C140
C230
K29 18WT PK
W/ABS
Z1 18BK
L9 16PK BK
S204
8W-70-13
Z1 12BK
G201
8W-15-4
L9 16BK WT
IGNITION SWITCH
ACC
OFF
RUN
START
(2)
TURN SIGNAL RELAY (8W-52-2)
C141
K29 18WT/PK
S104
8W-70-3
C101
29 STOP LAMP SWITCH SENSE (LEFT FENDER SIDE SHIELD)
POWERTRAIN CONTROL MODULE
Z1 18BK
CHIME BUZZER MODULE
C115
C10 STOP LAMP SWITCH SENSE (LOWER RIGHT OF I/P)
TRANSMISSION CONTROL MODULE
TO SPLICE S222 (8W-70-21)
J958W-13

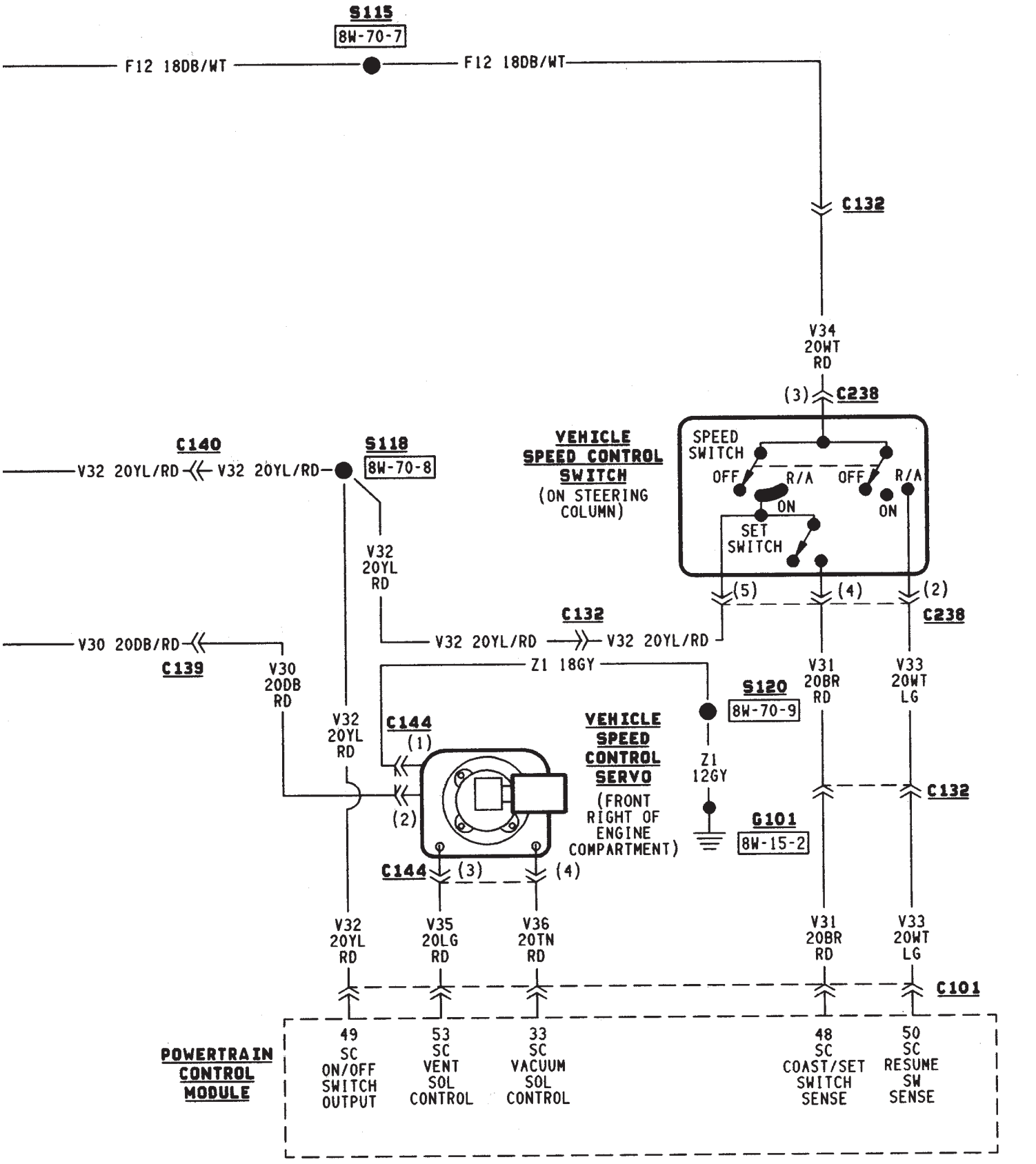
S115
8W-70-7
F12 18DB/WT
F12 18DB/WT
C132
V34
20WT
RD
(3)
C238
VEHICLE
SPEED CONTROL
SWITCH
(ON STEERING
COLUMN)
SPEED
SWITCH
OFF
R/A
OFF
R/A
ON
ON
SET
SWITCH
(5)
(4)
(2)
C238
C140
V32 20YL/RD
V32 20YL/RD
S118
8W-70-8
V32
20YL
RD
C132
V32 20YL/RD
V32 20YL/RD
V30 20DB/RD
C139
V30
20DB
RD
Z1 18GY
S120
8W-70-9
V31
20BR
RD
V33
20WT
LG
V32
20YL
RD
C144
(1)
(2)
VEHICLE
SPEED
CONTROL
SERVO
(FRONT
RIGHT OF
ENGINE
COMPARTMENT)
Z1
12GY
G101
8W-15-2
C132
C144
(3)
(4)
V32
20YL
RD
V35
20LG
RD
V36
20TN
RD
V31
20BR
RD
V33
20WT
LG
C101
POWERTRAIN
CONTROL
MODULE
49
SC
ON/OFF
SWITCH
OUTPUT
53
SC
VENT
SOL
CONTROL
33
SC
VACUUM
SOL
CONTROL
48
SC
COAST/SET
SWITCH
SENSE
50
SC
RESUME
SW
SENSE

J958W-13

INSTRUMENT CLUSTER

INDEX

	page
ABS Warning Lamp	2
Brake Warning Lamp	1
Cluster Ground	1
Diagram Index	1
Engine Coolant Temperature Warning Lamp	1
Four-Wheel Drive (4WD) Switch	1
Fuel Gauge	1
High-Beam Indicator Lamp	1
Instrument Cluster	1
Low Washer Fluid Warning Lamp	1
Malfunction Indicator Lamp (MIL)	1
Oil Pressure Warning Lamp	1
Seat Belt Indicator Warning Lamp	1
Speedometer	1
Tachometer	2
Turn Signal Indicator Lamps	1

INSTRUMENT CLUSTER

The instrument cluster contains the gauges and warning lamps. All gauges have magnetic movements.

When the ignition switch is in the START or RUN position, circuit A21 feeds circuit F87 through fuse 26 in the fuse block. Circuit A1 from fuse 6 in the Power Distribution Center (PDC) supplies voltage to circuit A21. Circuit A1 is HOT at all times.

Circuit F87 connects to the cluster connector to power the gauges and to the telltale connector to power the warning lamps.

Circuit E2 from fuse 25 in the fuse block feeds the illumination lamps. Circuit E2 originates at the headlamp switch and continues through fuse 25. The headlamp switch powers circuit E2 when the parking lamps or headlamp are ON.

Circuit Z2 provides ground for the indicator lamps and illumination lamps.

ENGINE COOLANT TEMPERATURE WARNING LAMP

Circuit G20 connects the engine coolant temperature warning lamp to the engine coolant temperature switch. When the switch closes, battery voltage from circuit F87 flows through the lamp to ground through the switch on circuit G20. The engine coolant temperature switch is case grounded to the engine. Circuit F87 connects to the instrument cluster connector and supplies voltage for the lamp.

Circuit G20 also connects to the warning lamp to ground when the ignition switch is in the START position. When the ignition switch is in the START position, the lamp illuminates for a bulb test.

FUEL GAUGE

The fuel level sensor is a variable resistor. Circuit G4 connects the fuel level sensor to the fuel gauge in the instrument cluster. Circuit F87 from fuse 26 in the fuse block supplies voltage to the fuel gauge. The fuel level sensor draws voltage from circuit F87 through the fuel gauge on circuit G4. Circuit G4 connects to the fuel level sensor. Circuit Z1 provides the ground path for the fuel level sensor.

As current flows through the coils in the fuel gauge, it creates a magnetic field. One of the coils in the gauge receives fixed current. The other coil is connected to the level sensor. The magnetic field controls the position of the fuel gauge pointer.

The fuel level sensor contains a variable resistor. As the position of the float arm on the fuel level sensor changes, the resistor changes the current flow through second coil in the fuel gauge. A change in current flow alters the magnetic field in the fuel gauge, which changes the pointer position.

OIL PRESSURE WARNING LAMP

The case grounded oil pressure switch connects to circuit G6. Circuit G6 connects to the oil pressure warning lamp. Circuit F87 connects to the instrument cluster connector and supplies battery voltage to oil pressure lamp.

When the oil pressure switch close, battery voltage flows through the warning lamp to ground through the switch, illuminating the lamp.

SPEEDOMETER

The speedometer and odometer receive a signal from the vehicle speed sensor on circuit G7. Circuit G7 also connects to the Powertrain Control Module (PCM) at cavity 47.

MALFUNCTION INDICATOR LAMP (MIL)

The PCM provides ground for the instrument cluster malfunction indicator lamp on circuit G3. Circuit G3 connects to cavity 32 of the PCM. Circuit F87 provides voltage for the lamp. The MIL displays the message CHECK ENGINE when illuminated.

For information regarding diagnostic trouble code access using the MIL lamp, refer to Group 14, Fuel Systems.

LOW WASHER FLUID WARNING LAMP

Circuit G29 connects the low washer fluid switch to the warning lamp in the instrument cluster. Circuit F12 supplies battery voltage to the switch.

When the low washer fluid switch closes, it connects circuits G29 and F12. Battery voltage from circuit F12 powers the low washer fluid lamp. Circuit Z1 at the instrument cluster provides ground to illuminate the warning lamp.

SEAT BELT INDICATOR WARNING LAMP

The seat belt indicator warning lamp is activated by the chime/buzzer on circuit G11. Circuit G11 supplies power to instrument cluster for the lamp. Circuit Z1 provides ground for the lamp at the cluster.

The chime/buzzer module powers circuit G11 after it receives an input on circuit G10 indicating the seat belt switch is open.

HIGH-BEAM INDICATOR LAMP

Circuit L3 supplies power for the high beam indicator lamp. The ground path for the lamp is through circuit Z1. Circuit Z1 provides ground for the indicator lamp at the cluster.

ABS WARNING LAMP

Circuit F87 provides power for the ABS warning lamp at the instrument cluster. Ground for the ABS warning lamp is provided by either the ABS control module or by the ABS power relay when the relay is not energized. The ABS control module illuminates the lamp by providing ground on circuit B205.

Circuit B205 splices to connect to circuit B235 through a diode. When the ABS power relay is not energized, it connects circuit B235 to circuit Z12. The ground path for the warning lamp is through the diode to circuit B235, through the ABS power relay to ground on circuit Z12.

The diode between circuits B205 and B235 prevents voltage from flowing to the ABS control module when the ABS power relay switches to supply power on circuit B235.

TURN SIGNAL INDICATOR LAMPS

Circuits L61 and L60 power for the turn signal indicator lamps. Circuit L61 powers the left indicator lamp. Circuit L60 powers the right indicator lamp. Circuit Z1 provides ground for the lamps.

BRAKE WARNING LAMP

Circuit F87 supplies power to the park brake lamp. Ground for the park brake lamp is supplied through the case grounded park brake switch or brake warning switch on circuit G9. Circuit G9 connects to the brake warning lamp at the instrument cluster.

FOUR-WHEEL DRIVE (4WD) SWITCH

When the 4WD switch closes, circuit Z1 provides ground for the 4WD indicator lamp in the instrument cluster. Circuit F87 connects to the instrument cluster and supplies battery voltage to the 4WD indicator lamp. Circuit G107 connects the indicator lamp to the 4WD switch. Circuit G106 connects the lamp to the instrument cluster and circuit F87.

TACHOMETER

The Powertrain Control Module (PCM) supplies the signal to the tachometer on circuit G21. Circuit G21 connects to cavity 43 of the PCM.

CLUSTER GROUND

Circuit Z1 from the instrument cluster left connector provides ground for the illumination lamps and indicator lamps.

HELPFUL INFORMATION

- If the warning lamps don't operate, check fuse 26 in the fuse block.
- If the indicator lamps don't operate, check fuse 14 in the fuse block.
- If the illumination lamps don't operate, check fuse 25 in the fuse block.

DIAGRAM INDEX

Component	Page
4WD Switch	8W-40-9, 13
4WD Indicator Lamp	8W-40-9, 13
ABS Control Module	8W-40-10, 13
Brake Warning Switch	8W-40-9, 14
Chime/Buzzer Module	8W-40-8, 12
Dimming Module	8W-40-11
Diode	8W-40-13
Engine Coolant Temperature Sending Unit	8W-40-6
Engine Oil Pressure Sending Unit	8W-40-6
Fuse 5 (PDC)	8W-40-4, 11
Fuse 6 (PDC)	8W-40-4, 8, 12
Fuse 11 (PDC)	8W-40-8, 12
Fuse 9 (Fuse Block)	8W-40-4, 11
Fuse 25 (Fuse Block)	8W-40-4, 11
Fuse 26 (Fuse Block)	8W-40-4, 8, 12
Fog Lamp Switch Lamp	8W-40-11
Headlamp Switch	8W-40-4, 11
Headlamp Delay Module	8W-40-8, 12
Headlamp Dimmer Switch	8W-40-5
Ignition Switch	8W-40-4, 6, 8, 12, 14
Instrument Cluster	8W-40-4 thru 7, 14
Low Washer Fluid Lamp Switch	8W-40-8, 12
Overhead Console	8W-40-8, 12
Park Brake Switch	8W-40-9, 14
Powertrain Control Module	8W-40-6, 9, 14
Telltale Connector (Instrument Cluster)	8W-40-8 thru 14

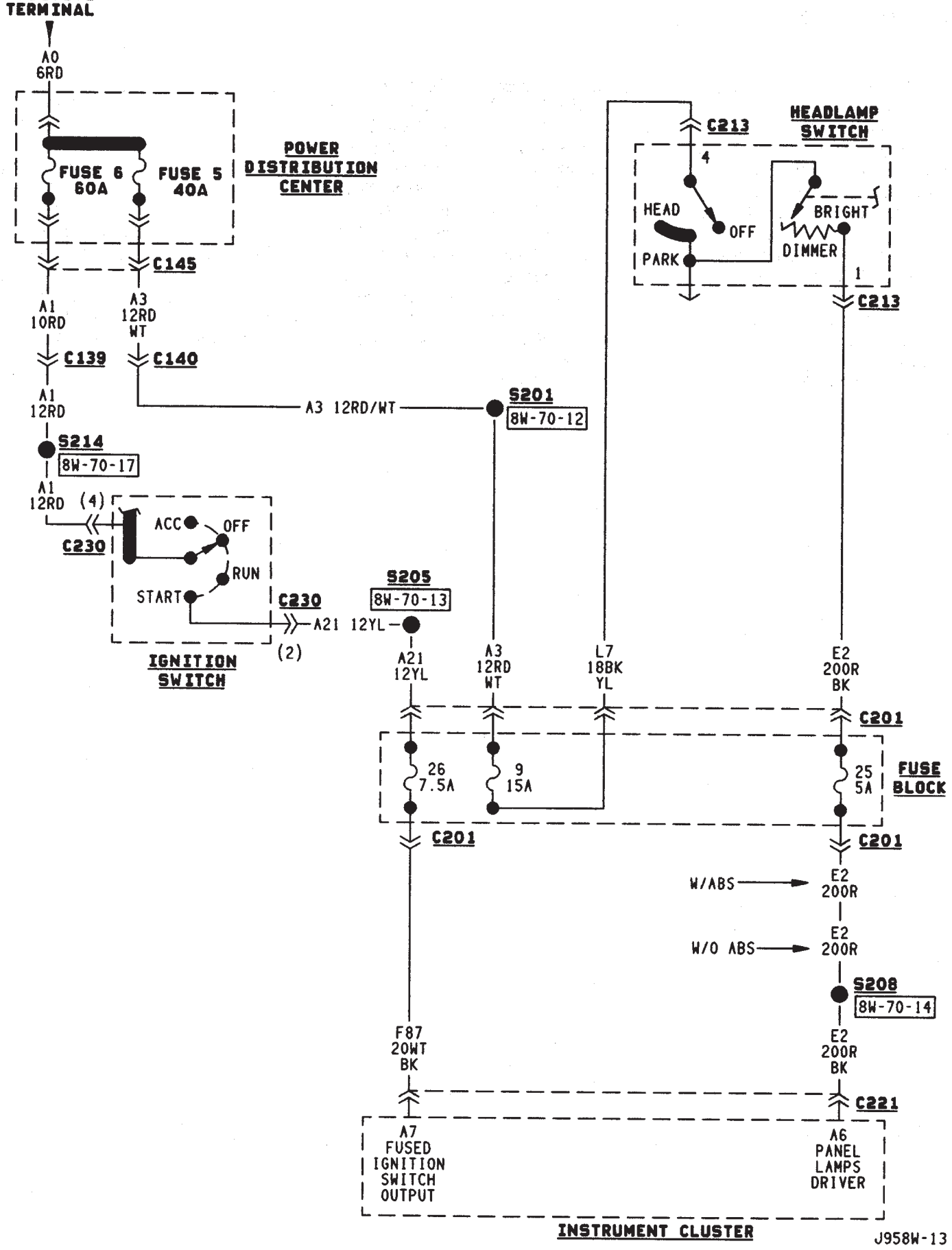
BATTERY POSITIVE TERMINAL
A0 6RD
FUSE 6 60A
FUSE 5 40A
POWER DISTRIBUTION CENTER
C145
A1 10RD
A3 12RD WT
C139
C140
A1 12RD
A3 12RD/WT
S201
8W-70-12
S214
8W-70-17
A1 12RD
(4)
C230
ACC
OFF
RUN
START
C230
(2)
IGNITION SWITCH
S205
8W-70-13
A21 12YL
C213
HEADLAMP SWITCH
4
HEAD
OFF
PARK
BRIGHT
DIMMER
1
C213
A21 12YL
A3 12RD WT
L7 18BK YL
E2 200R BK
C201
26 7.5A
9 15A
25 5A
FUSE BLOCK
C201
C201
W/ABS
E2 200R
W/O ABS
E2 200R
S208
8W-70-14
F87 20WT BK
E2 200R BK
C221
A7 FUSED IGNITION SWITCH OUTPUT
A6 PANEL LAMPS DRIVER
INSTRUMENT CLUSTER
J958W-13

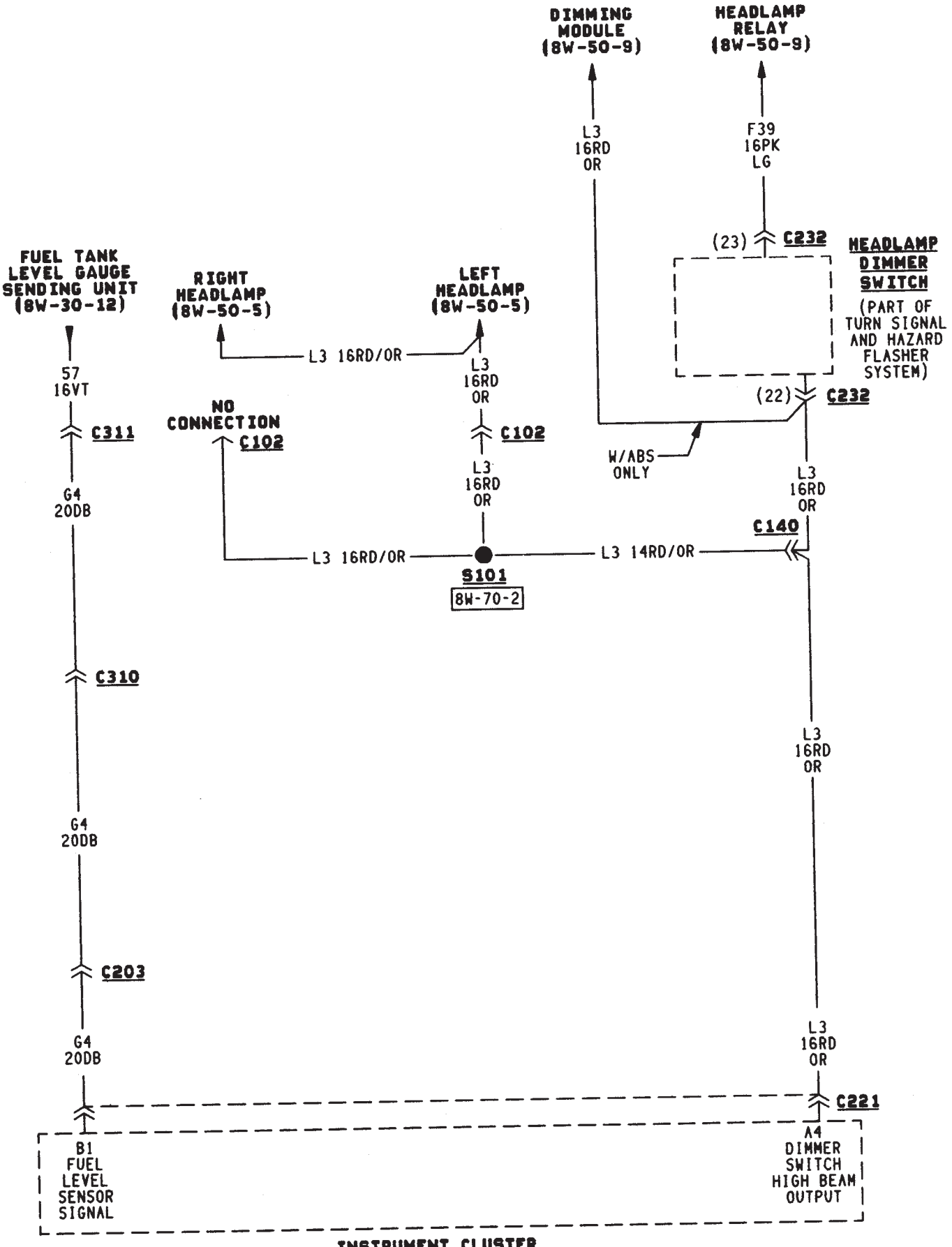
DIMMING MODULE (8W-50-9)
HEADLAMP RELAY (8W-50-9)
L3 16RD OR
F39 16PK LG
(23) C232
HEADLAMP DIMMER SWITCH
(PART OF TURN SIGNAL AND HAZARD FLASHER SYSTEM)
(22) C232
FUEL TANK LEVEL GAUGE SENDING UNIT (8W-30-12)
RIGHT HEADLAMP (8W-50-5)
LEFT HEADLAMP (8W-50-5)
L3 16RD/OR
57 16VT
C311
G4 20DB
NO CONNECTION
C102
L3 16RD OR
C102
W/ABS ONLY
L3 16RD OR
C140
L3 16RD/OR
L3 14RD/OR
S101
8W-70-2
C310
L3 16RD OR
G4 20DB
C203
G4 20DB
L3 16RD OR
C221
B1 FUEL LEVEL SENSOR SIGNAL
A4 DIMMER SWITCH HIGH BEAM OUTPUT
INSTRUMENT CLUSTER

J958W-13

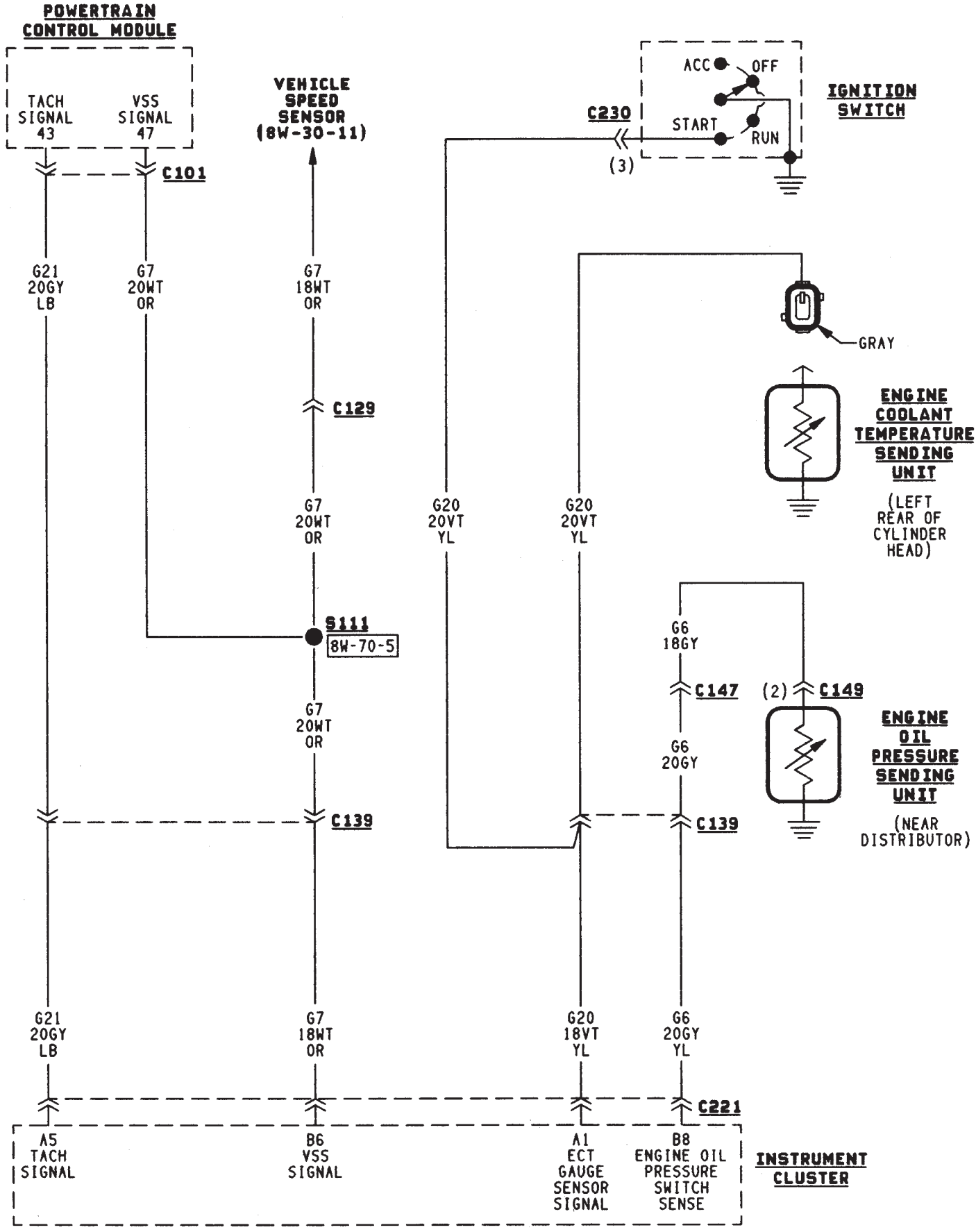
POWERTRAIN CONTROL MODULE
TACH SIGNAL 43
VSS SIGNAL 47
C101
VEHICLE SPEED SENSOR (8W-30-11)
C230
(3)
ACC
OFF
START
RUN
IGNITION SWITCH
G21 20GY LB
G7 20WT OR
G7 18WT OR
C129
G7 20WT OR
S111
8W-70-5
G7 20WT OR
C139
G20 20VT YL
G20 20VT YL
GRAY
ENGINE COOLANT TEMPERATURE SENDING UNIT
(LEFT REAR OF CYLINDER HEAD)
G6 18GY
C147
(2)
C149
G6 20GY
C139
ENGINE OIL PRESSURE SENDING UNIT
(NEAR DISTRIBUTOR)
G21 20GY LB
G7 18WT OR
G20 18VT YL
G6 20GY YL
C221
A5 TACH SIGNAL
B6 VSS SIGNAL
A1 ECT GAUGE SENSOR SIGNAL
B8 ENGINE OIL PRESSURE SWITCH SENSE
INSTRUMENT CLUSTER

J958W-13

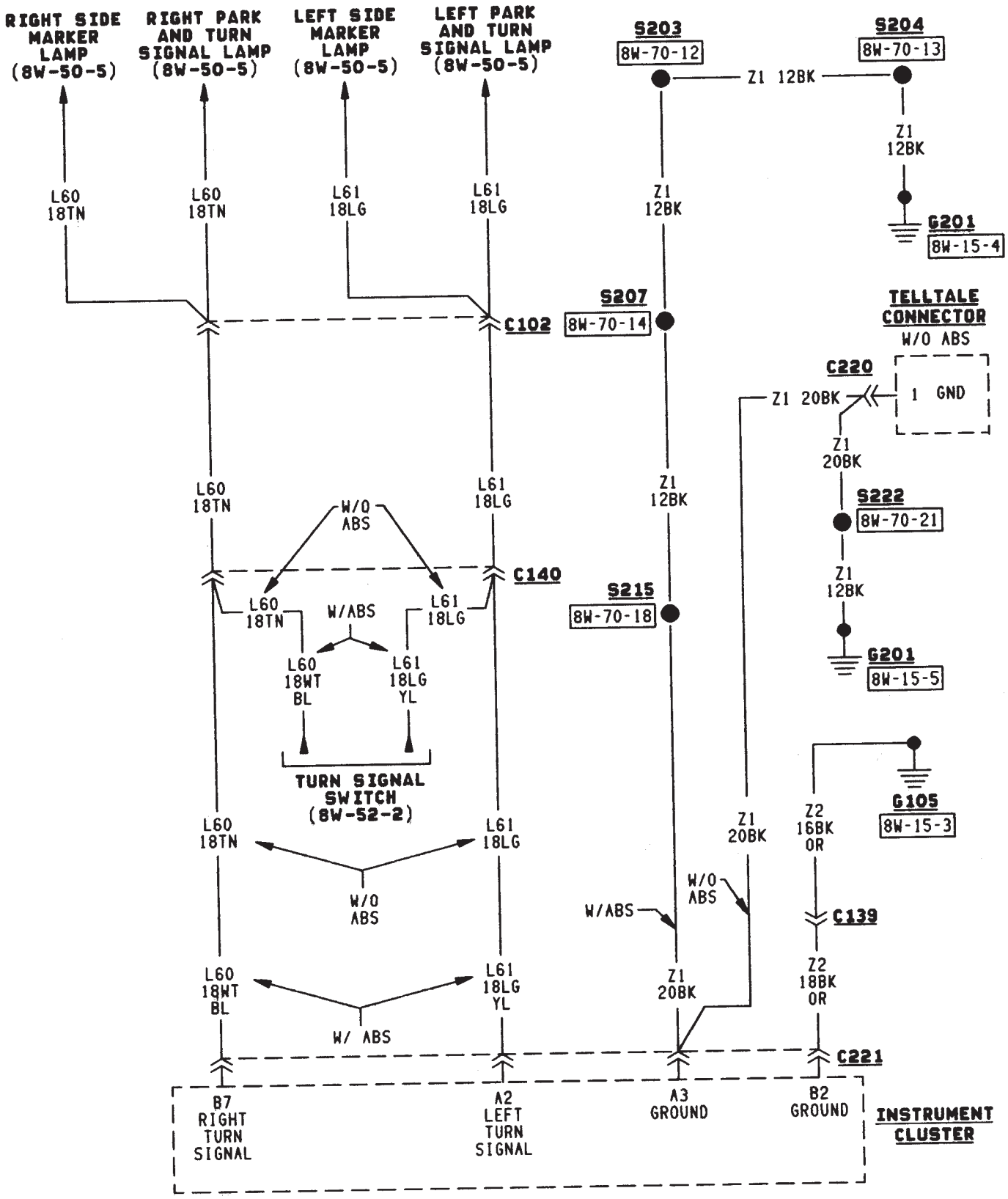
RIGHT SIDE MARKER LAMP (8W-50-5)
RIGHT PARK AND TURN SIGNAL LAMP (8W-50-5)
LEFT SIDE MARKER LAMP (8W-50-5)
LEFT PARK AND TURN SIGNAL LAMP (8W-50-5)
S203
8W-70-12
S204
8W-70-13
Z1 12BK
L60 18TN
L61 18LG
G201
8W-15-4
S207
8W-70-14
TELLTALE CONNECTOR
W/O ABS
C102
C220
1 GND
Z1 20BK
S222
8W-70-21
W/O ABS
C140
W/ABS
S215
8W-70-18
L60 18WT BL
L61 18LG YL
TURN SIGNAL SWITCH (8W-52-2)
G105
8W-15-3
Z2 16BK OR
C139
C221
B7 RIGHT TURN SIGNAL
A2 LEFT TURN SIGNAL
A3 GROUND
B2 GROUND
INSTRUMENT CLUSTER

J958W-13

TELLTALE CONNECTOR W/O ABS

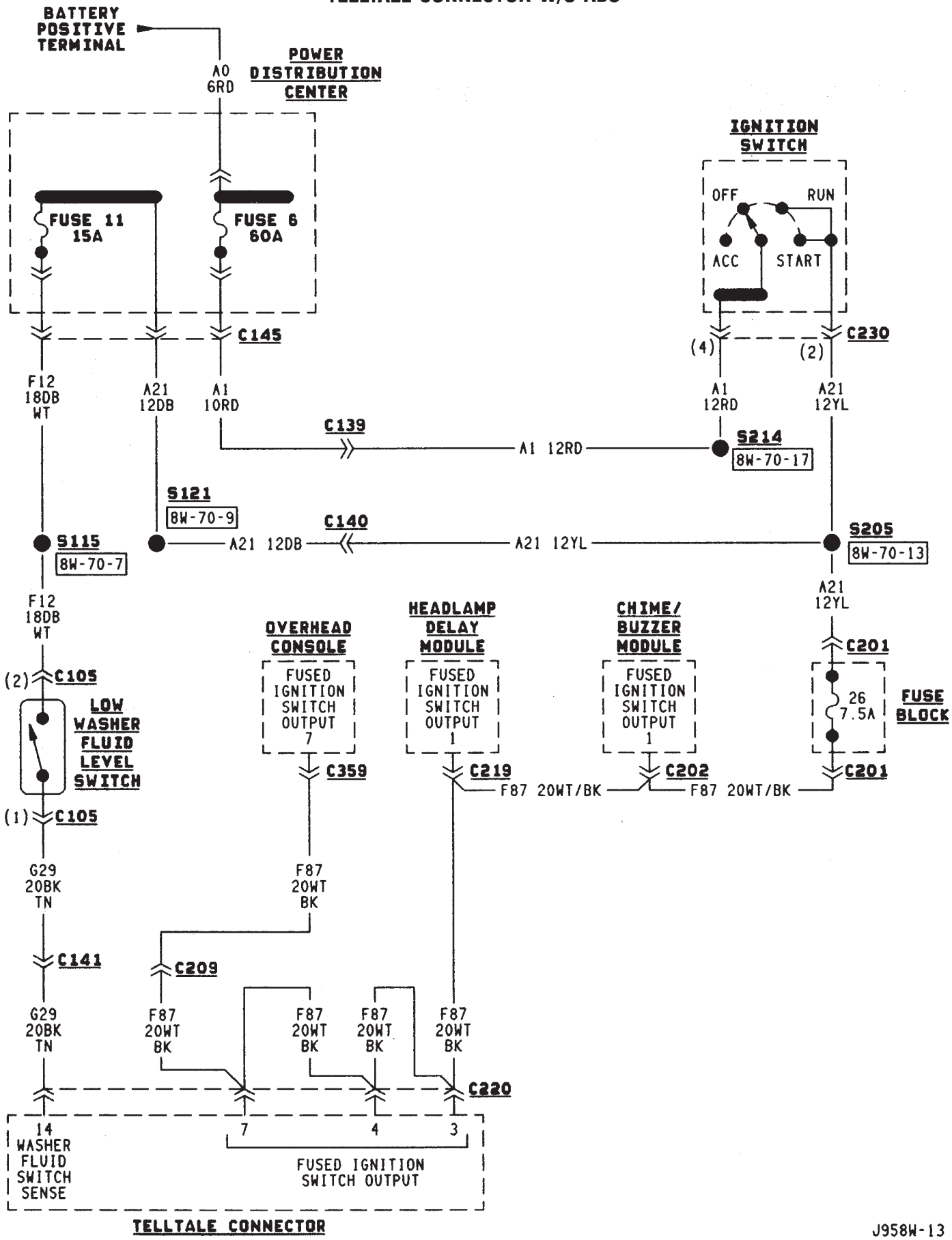

J958W-13

TELLTALE CONNECTOR W/O ABS

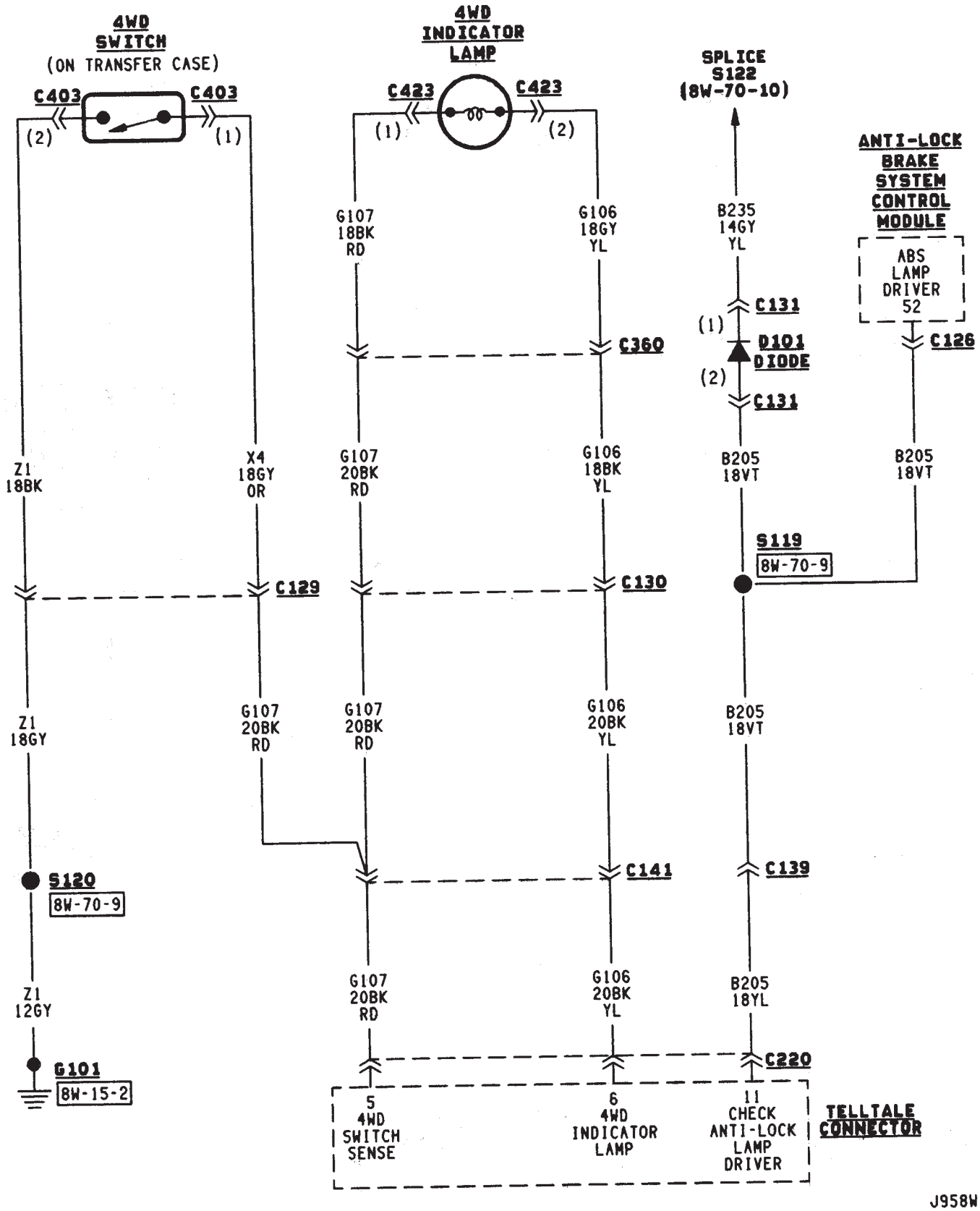

J958W-13

TELLTALE CONNECTOR W/ABS

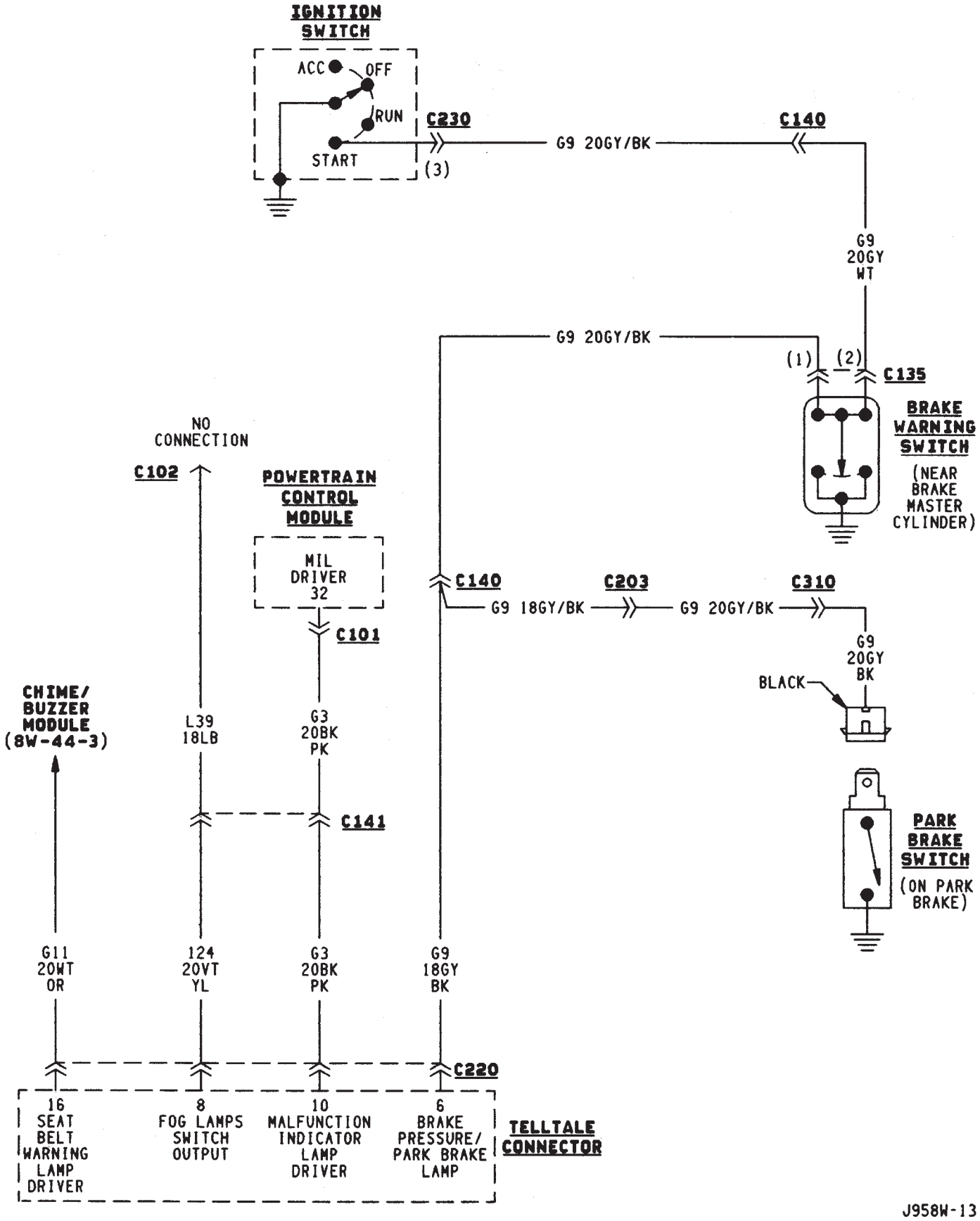

J958W-13

TELLTALE CONNECTOR W/ABS

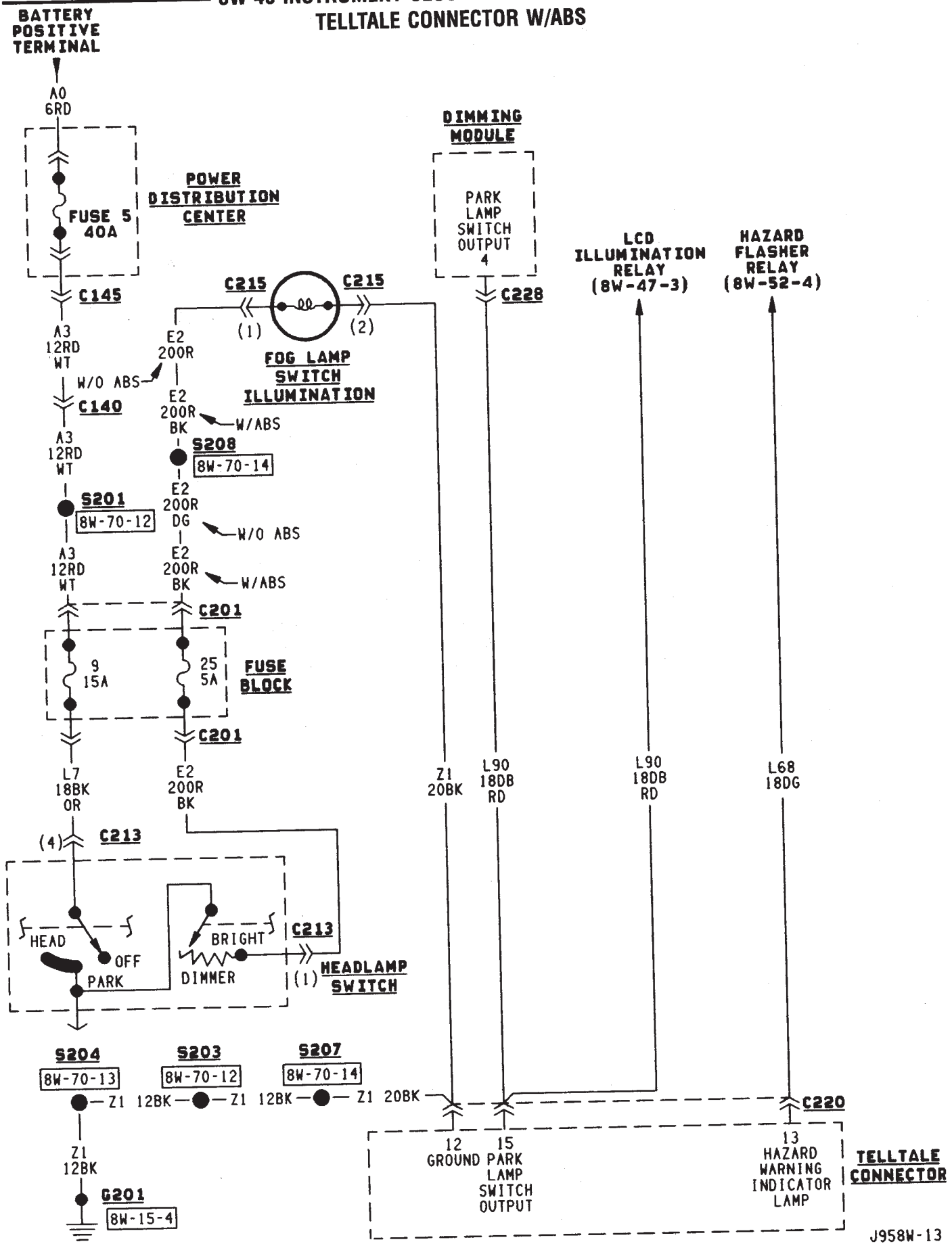

TELLTALE CONNECTOR W/O ABS

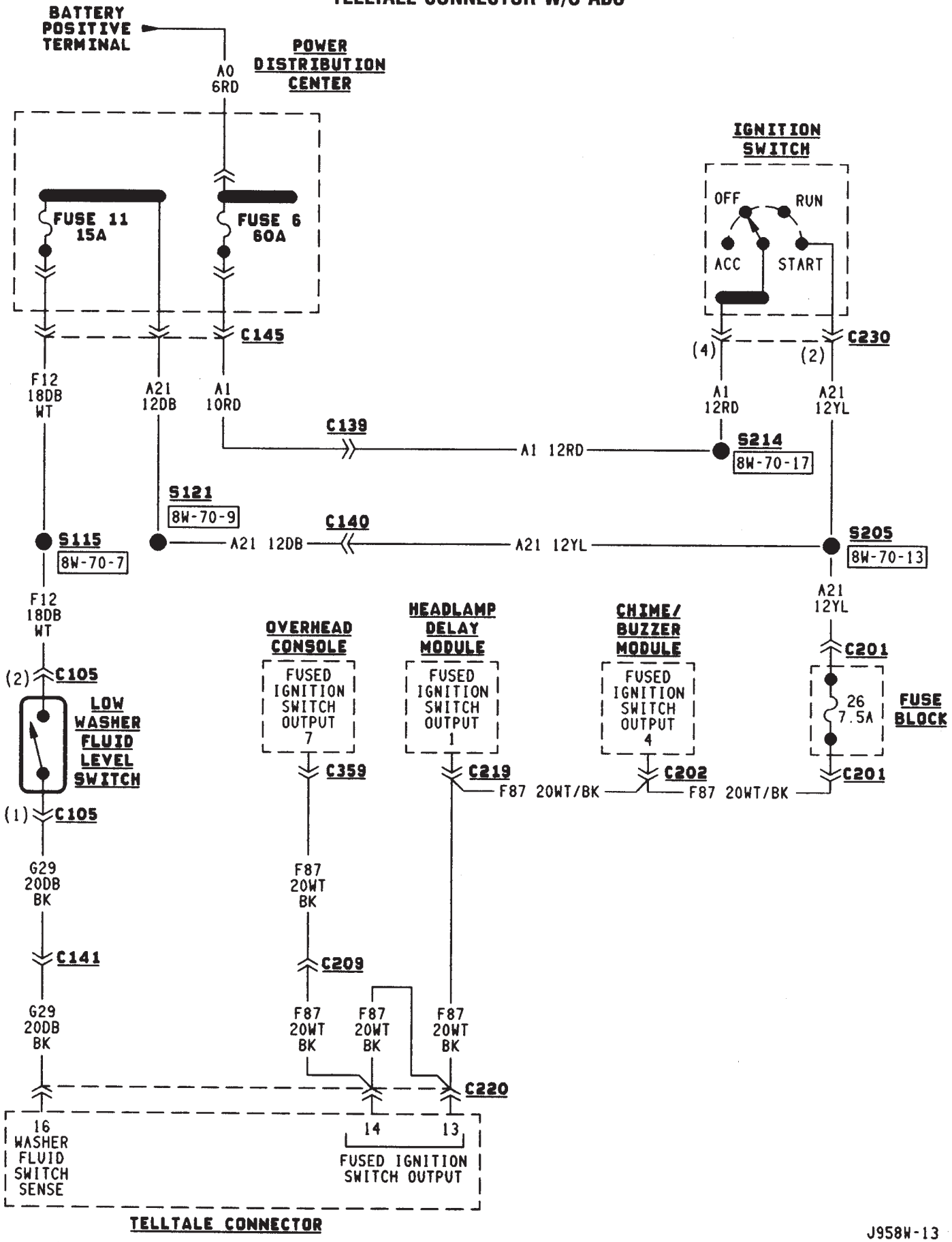

J958W-13

TELLTALE CONNECTOR W/O ABS

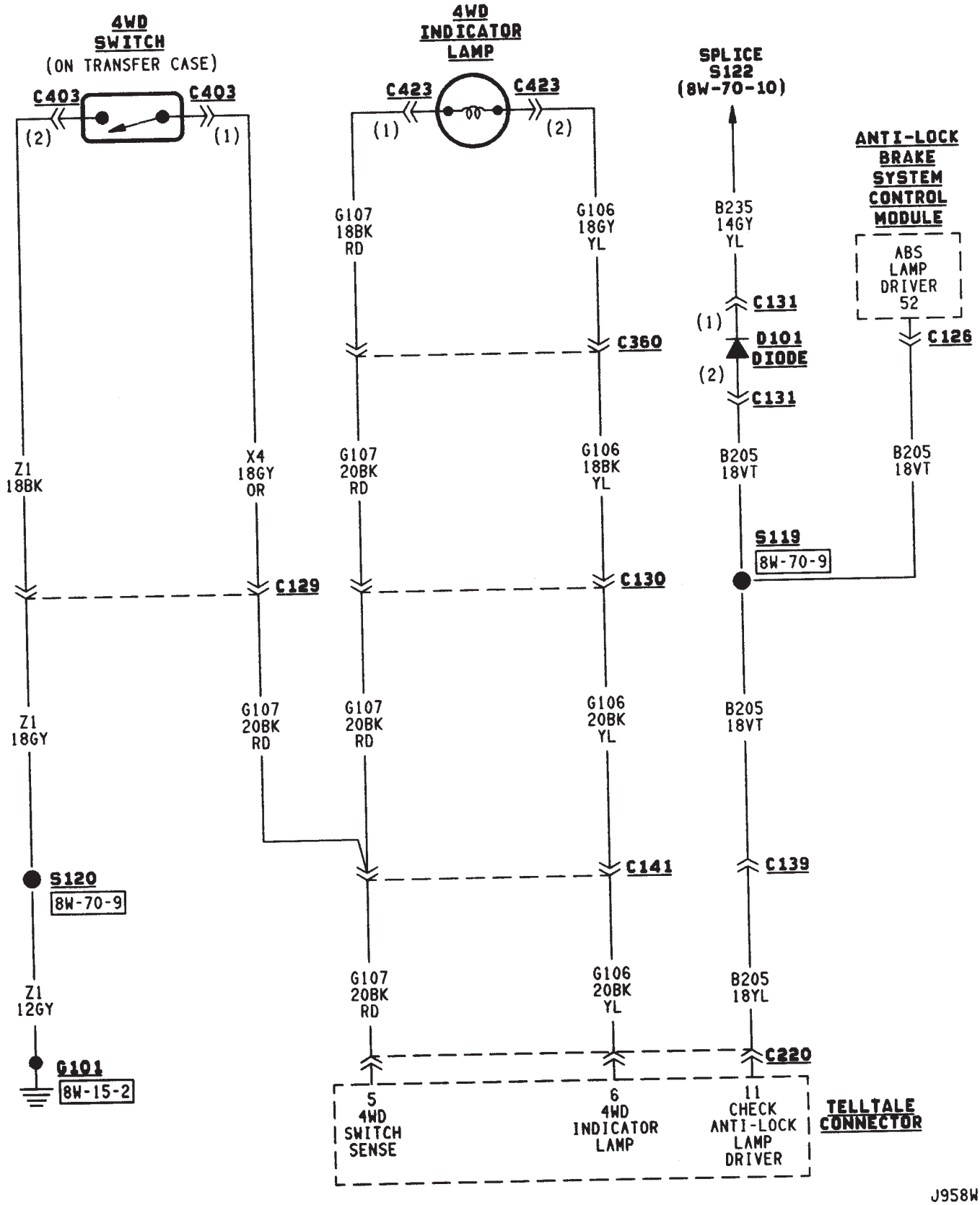

J958W-13

TELLTALE CONNECTOR W/O ABS

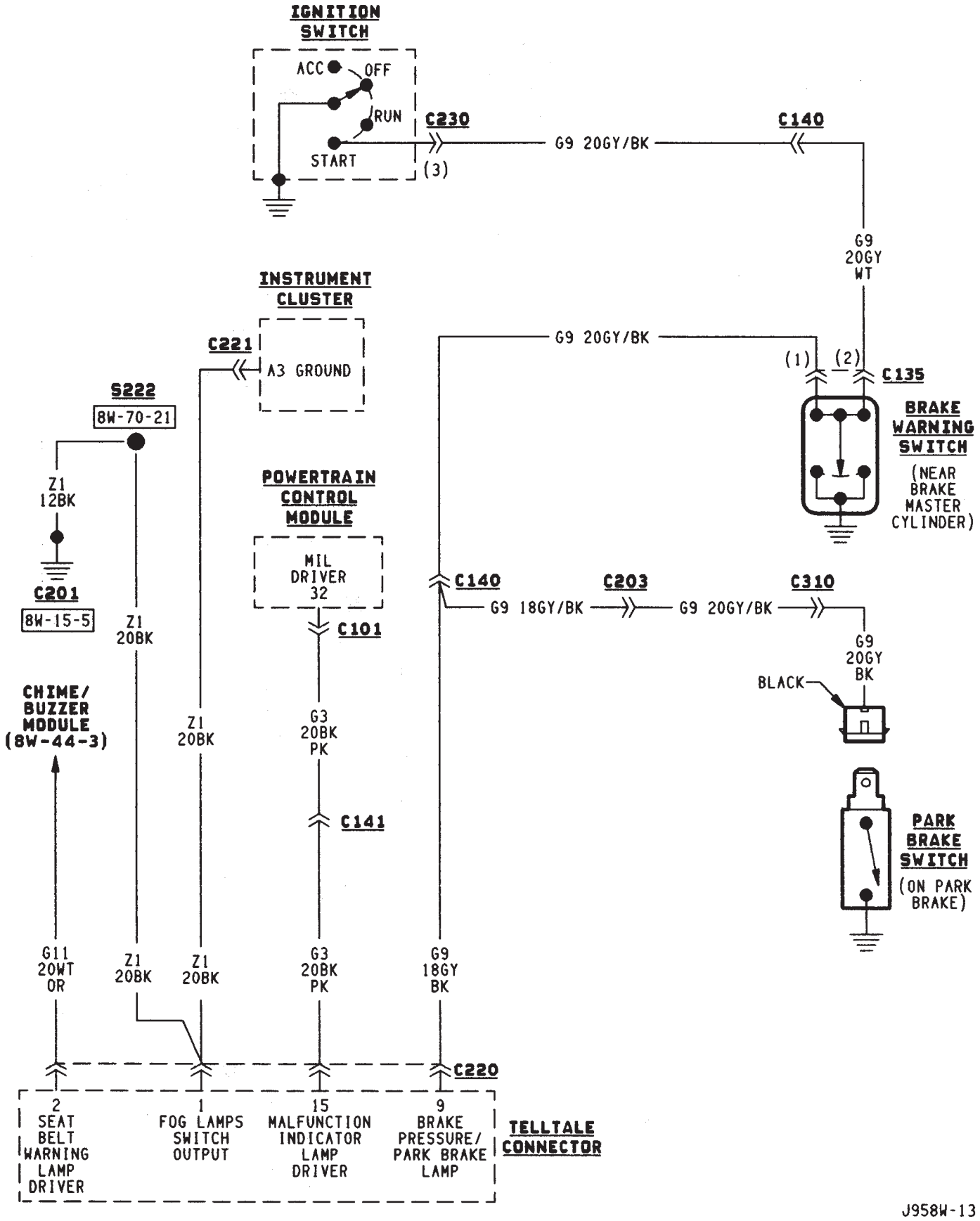

J958W-13

HORN/CIGAR LIGHTER

HORN

The horn system uses two switches and horn relay. The horn switches are on the steering wheel.

Circuit A7 from fuse 3 in the power distribution center (PDC) feeds a fuse block bus bar that powers circuit X4 through fuse 5 in the fuse block. Circuit X4 is HOT at all times and powers the coil and contact sides of the horn relay.

When the case grounded horn switch is depressed, circuit X3 provides ground for the coil side of the relay and the contacts close. When the contacts close, circuit X2 supplies voltage to the case grounded horns.

HELPFUL INFORMATION

- The horn switches are grounded to the steering wheel.
- Circuit X4 is double crimped at the coil side of the horn relay.
- Check fuse 3 in the PDC and fuse 5 in the fuse block.

CIGAR LIGHTER

In the ACCESSORY or RUN position, the ignition switch supplies voltage to fuse 13 in the fuse block on circuit A48. Fuse 13 feeds circuit F85 which connects to the cigar lighter. When the lighter is depressed, the contacts inside of the lighter element close and voltage flows to ground on circuit Z1.

HELPFUL INFORMATION

- In the ACCESSORY or RUN position, the ignition switch connects circuit A1 from fuse 6 in the PDC with circuit A48.

DIAGRAM INDEX

Component	Page
Cigar Lighter	8W-41-3
Fuse 3 (PDC)	8W-41-2
Fuse 6 (PDC)	8W-41-3
Fuse 5 (Fuse Block)	8W-41-2
Fuse 13 (Fuse Block)	8W-41-3
Horns	8W-41-2
Horn Relay	8W-41-2
Horn Switch	8W-41-2
Ignition Switch	8W-41-3

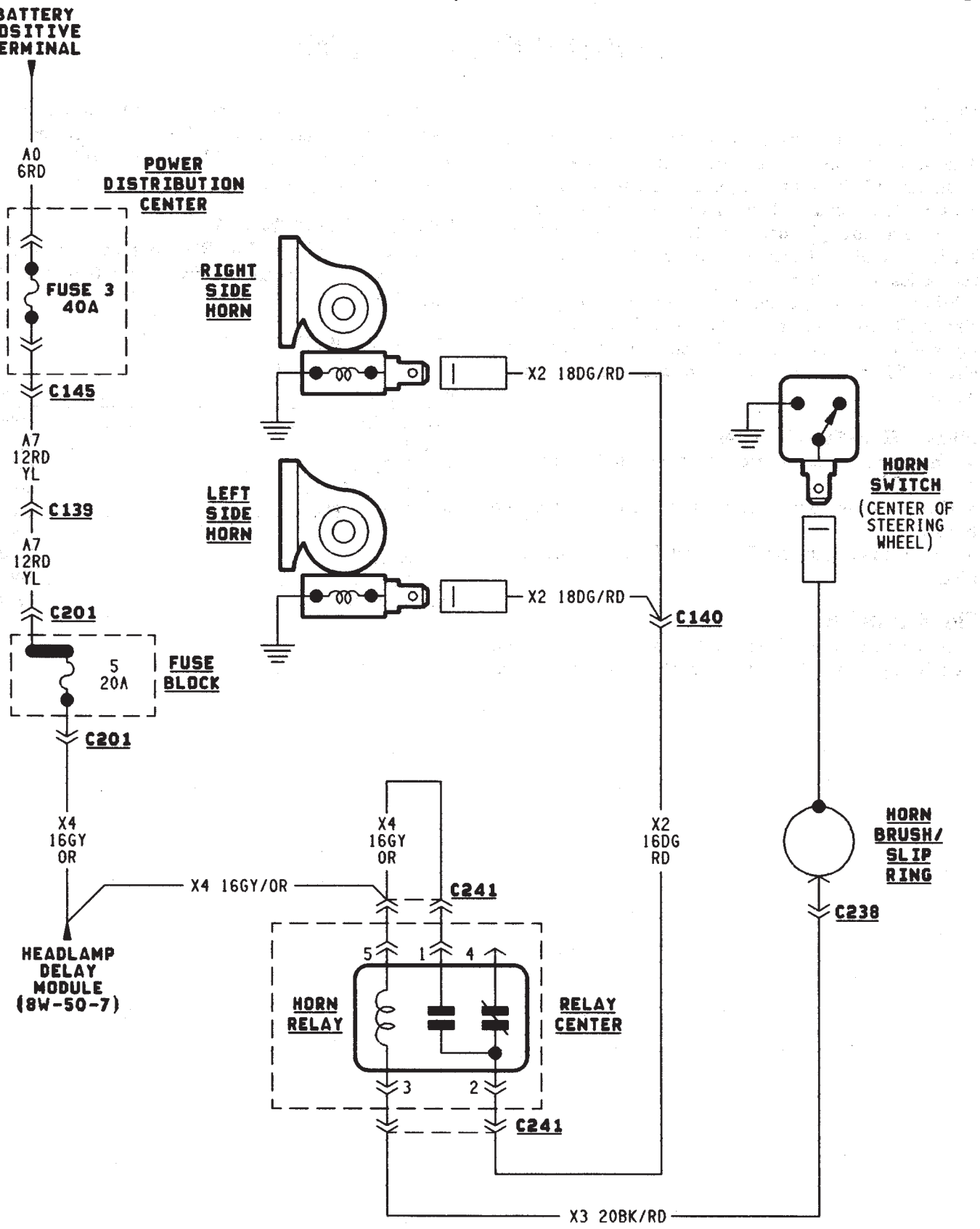
BATTERY POSITIVE TERMINAL
A0 6RD
POWER DISTRIBUTION CENTER
FUSE 3 40A
C145
A7 12RD YL
C139
A7 12RD YL
C201
5 20A
FUSE BLOCK
C201
RIGHT SIDE HORN
LEFT SIDE HORN
X2 18DG/RD
X2 18DG/RD
C140
HORN SWITCH (CENTER OF STEERING WHEEL)
HORN BRUSH/ SLIP RING
C238
X4 16GY OR
X4 16GY/OR
X4 16GY OR
C241
X2 16DG RD
HEADLAMP DELAY MODULE (8W-50-7)
5
1
4
HORN RELAY
RELAY CENTER
3
2
C241
X3 20BK/RD

J958W-13

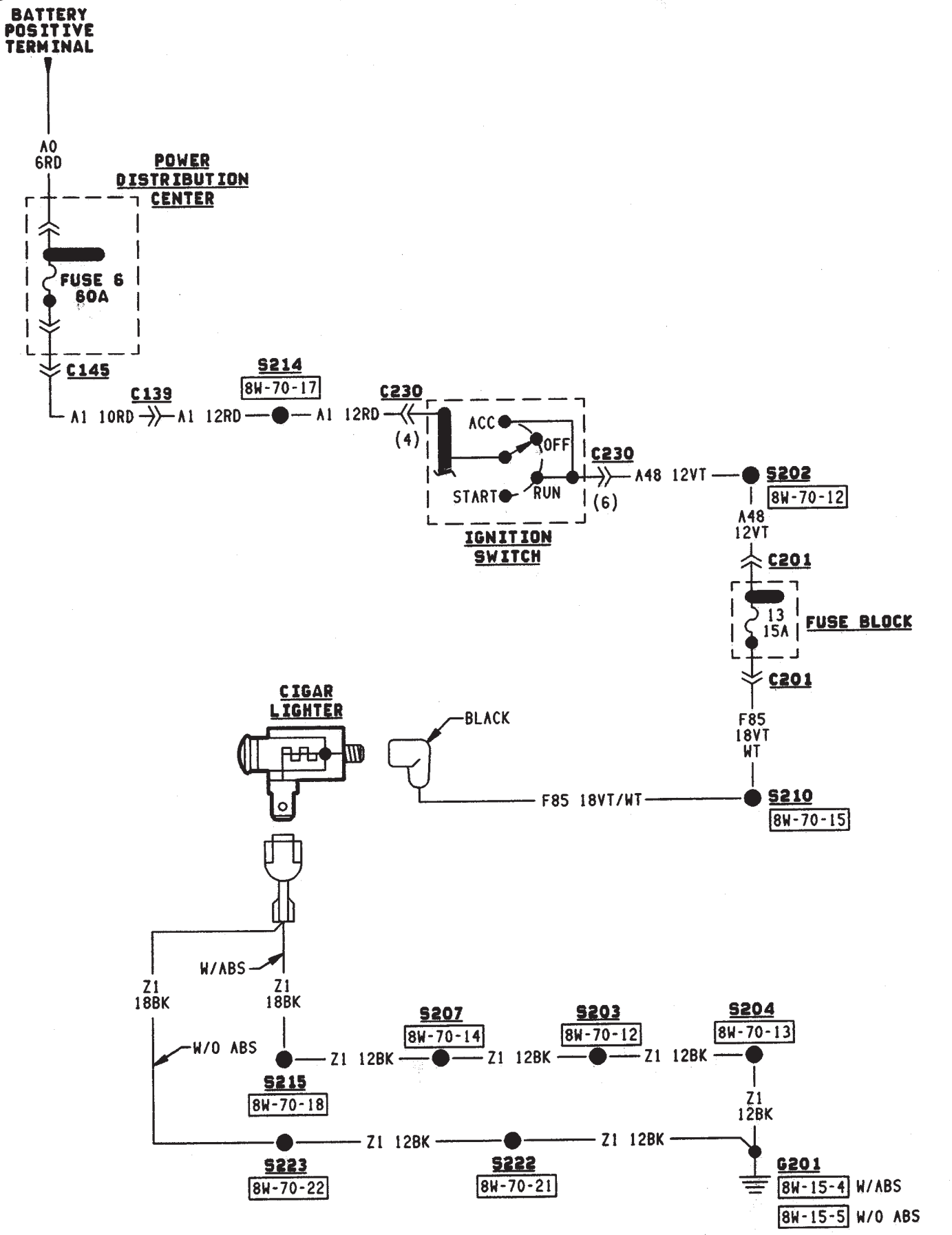
BATTERY POSITIVE TERMINAL
A0 6RD
POWER DISTRIBUTION CENTER
FUSE 6 60A
C145
C139
A1 10RD
A1 12RD
S214
8W-70-17
A1 12RD
C230
(4)
ACC
OFF
START
RUN
C230
(6)
IGNITION SWITCH
A48 12VT
S202
8W-70-12
A48 12VT
C201
13 15A
FUSE BLOCK
C201
F85 18VT WT
CIGAR LIGHTER
BLACK
F85 18VT/WT
S210
8W-70-15
W/ABS
Z1 18BK
Z1 18BK
W/O ABS
S207
8W-70-14
S203
8W-70-12
S204
8W-70-13
Z1 12BK
Z1 12BK
Z1 12BK
S215
8W-70-18
Z1 12BK
Z1 12BK
Z1 12BK
S223
8W-70-22
S222
8W-70-21
G201
8W-15-4 W/ABS
8W-15-5 W/O ABS

J958W-13

AIR CONDITIONING/HEATER

CONTENTS

	page		page
A/C-HEATER SYSTEM	1	HEATER SYSTEM	1

GENERAL INFORMATION

This section of the wiring diagrams is divided into two sub-sections; Heater, and A/C and Heater. When referring to the circuit descriptions or wiring diagrams, ensure that you use the correct sub-section.

HEATER SYSTEM

BLOWER MOTOR

In the RUN or ACCESSORY position, the ignition switch connects circuit A1 from fuse 6 in the PDC to circuit A48. Circuit A48 supplies battery voltage to fuse 4 in the fuse block. Fuse 4 supplies power to the heat mode switch on circuit C7.

Circuit C43 from the heat mode switch splices to supply voltage to the blower motor switch and the blower motor resistor block. The blower motor switch sets blower motor speed to HIGH, M1, M2, or LOW.

When the blower motor switch is in the LOW position, circuit C43 from the heat mode supplies voltage to the resistor block. Voltage does not pass through the blower motor switch in the LOW position.

In the M1 position, the blower motor switch supplies voltage to the resistor block on circuit C4. From circuit C4, voltage passes through three resistors in the resistor block to the blower motor on circuit C1.

In the M2 position, the blower motor supplies voltage to the resistor block on circuit C6. From circuit C6 voltage flows through two resistors to the blower motor on circuit C1.

In the HIGH position, the blower motor switch connects directly to the blower motor on circuit C1. Voltage does not pass through the resistor block in the HIGH position.

Circuit Z1 provides ground for the blower motor.

DIAGRAM INDEX

AC/HEATER SYSTEM

GENERAL INFORMATION

Several fuses supply power for the air conditioning/heater system. In the START or RUN positions, the ignition switch connects circuit A1 from fuse 6 in the Power Distribution Center (PDC) to circuit A21. Circuit A21 powers a bus bar in the PDC that feeds circuit F12 through fuse 11. Circuit F12 feeds the contact side of the A/C compressor clutch relay and the coil side of the radiator fan relay.

In the RUN or ACCESSORY position, the ignition switch connects circuit A1 from fuse 6 in the PDC to circuit A48. Circuit A48 supplies battery voltage to fuse 4 in the fuse block. Fuse 4 supplies power to the A/C-Heater control switch on circuit C7.

Fuse 15 in the PDC supplies battery voltage to the contact side of the radiator fan relay on circuit F141. Circuit A14 from fuse 2 in the PDC powers PDC fuse 15.

BLOWER MOTOR

In the RUN or ACCESSORY position, the ignition switch connects circuit A1 from fuse 6 in the PDC to circuit A48. Circuit A48 supplies battery voltage to

fuse 4 in the fuse block. Fuse 4 supplies power to the A/C-Heater control switch on circuit C7.

Circuit C43 from the A/C-heater switch splices to supply voltage to the blower motor switch and the blower motor resistor block. The blower motor switch sets blower motor speed to HIGH, M1, M2, or LOW.

When the blower motor switch is in the LOW position, circuit C43 from the A/C-Heater switch supplies voltage to the resistor block. Voltage does not pass through the blower motor switch in the LOW position

In the M1 position, the blower motor switch supplies voltage to the resistor block on circuit C4. From circuit C4, voltage passes through three resistors in the resistor block to the blower motor on circuit C1.

In the M2 position, the blower motor supplies voltage to the resistor block on circuit C6. From circuit C6 voltage flows through two resistors to the blower motor on circuit C1.

In the HIGH position, the blower motor switch connects directly to the blower motor on circuit C1. Voltage does not pass through the resistor block in the HIGH position.

Circuit Z1 provides ground for the blower motor.

AIR CONDITIONING OPERATION

When the A/C-heater control switch is moved to an A/C position or the defrost position, the Powertrain Control Module (PCM) receives the A/C select signal on circuit C90. Circuit C90 connects to cavity 28 of the PCM.

Circuit also C90 splices to the low pressure switch and to supply battery voltage to the coil side of the A/C compressor clutch relay. If the low pressure switch is closed, circuit C90 connects to circuit C21. Circuit C21 supplies battery voltage to the A/C cycling switch. Circuit C91 from the A/C cycling switch provides the A/C request signal to the PCM. Circuit C91 connects to cavity 27 of the PCM. Circuit Z1 provides ground for the A/C cycling switch.

After receiving the A/C request signal, the PCM supplies ground for the A/C compressor clutch relay on circuit C13. Circuit F12 from fuse 11 in the PDC supplies battery voltage to the contact side of the A/C compressor clutch relay. When the PCM grounds the relay, the contacts close and connect circuit F12 to circuit C3. Circuit C3 feeds the A/C compressor clutch.

Also after receiving the A/C request signal, the PCM supplies ground for the coil side of the radiator fan relay on circuit C27 (4.0L engine). Circuit C27 connects to cavity 31 of the PCM. Circuit F12 supplies battery voltage to the coil side of the relay.

When the PCM grounds the coil side of the radiator fan relay, the contacts close and connect circuit F141 from fuse 15 in the PDC to circuit C25. Circuit C25 feeds the radiator fan motor. Circuit Z1 provides ground for the motor.

HELPFUL INFORMATION

Circuit A14 from PDC fuse 2 powers circuit F141 through fuse 15 in the PDC.

RADIATOR FAN RELAY AND MOTOR

In the START or RUN positions, the ignition switch connects circuit A1 from fuse 6 in the Power Distribution Center (PDC) to circuit A21. Circuit A21 powers a bus bar in the PDC that feeds circuit F12 through fuse 11. Circuit F12 feeds the coil side of the radiator fan relay.

The PCM supplies ground for the coil side of the radiator fan relay on circuit C27. Circuit C27 connects to cavity 31 of the PCM.

When the PCM grounds the coil side of the radiator fan relay, the contacts close and connect circuit F141 from fuse 15 in the PDC to circuit C25. Circuit C25 feeds the radiator fan motor. Circuit Z1 provides ground for the radiator fan motor.

HELPFUL INFORMATION

Circuit A14 from PDC fuse 2 powers circuit F141 through fuse 15 in the PDC.

DIAGRAM INDEX

Component	Page
A/C Compressor Clutch	8W-42-4
A/C Compressor Clutch Relay	8W-42-4
A/C Cycling Switch	8W-42-4
A/C Low Pressure Switch	8W-42-4
A/C Mode Select Switch	8W-42-5
Blower Motor	8W-42-3
Blower Motor Switch	8W-42-3
Blower Motor Resistor	8W-42-3
Fuse 2 (PDC)	8W-42-5
Fuse 4 (Fuse Block)	8W-42-3, 5
Fuse 6 (PDC)	8W-42-3, 4, 5
Fuse 11 (PDC)	8W-42-4
Fuse 15 (PDC)	8W-42-5
Heater Mode Switch	8W-42-3
Ignition Switch	8W-42-3, 4, 5
Powertrain Control Module	8W-42-4
Radiator Fan Motor	8W-42-5
Radiator Fan Relay	8W-42-5

HEATER ONLY

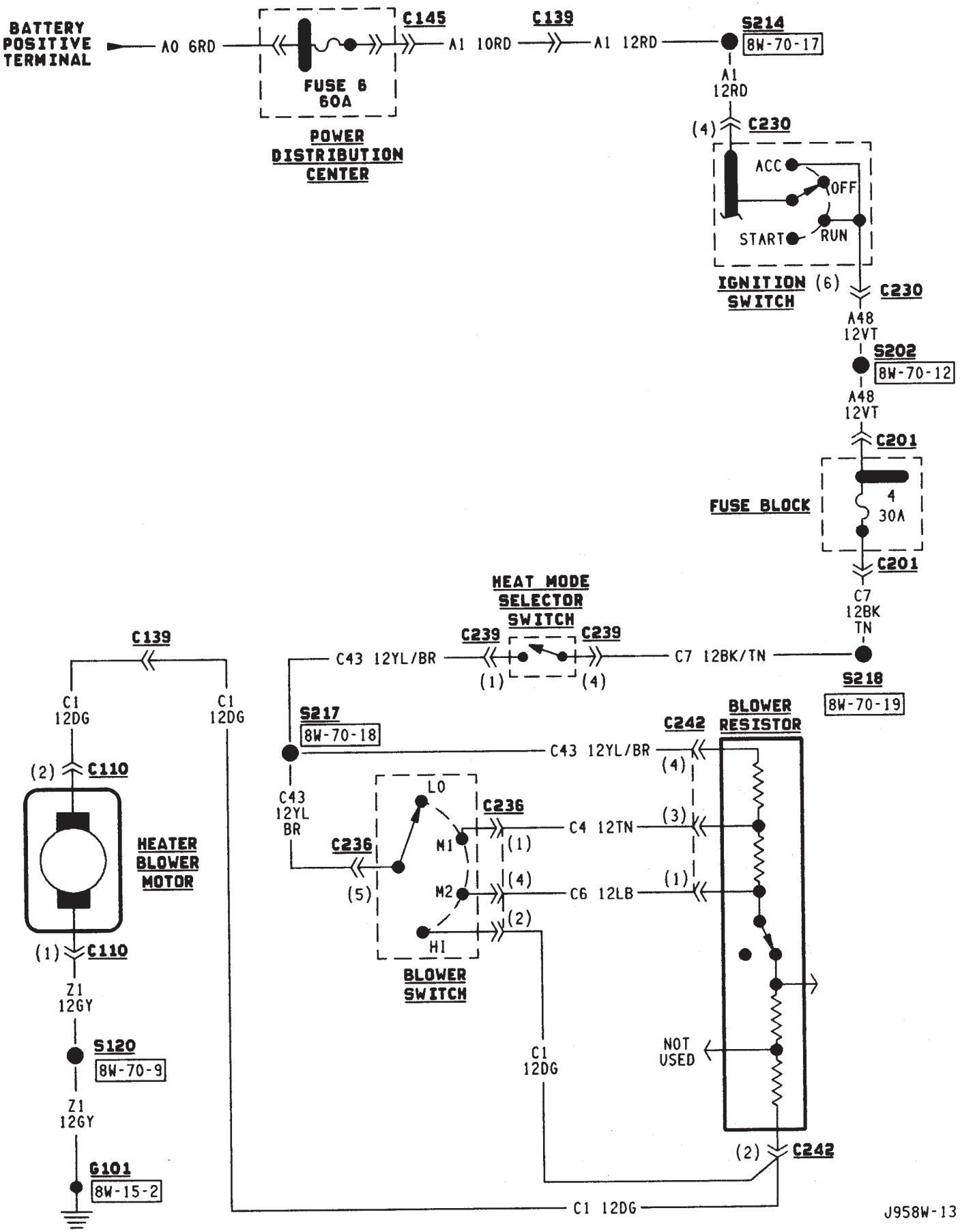
BATTERY POSITIVE TERMINAL
A0 6RD
C145
FUSE 6 60A
POWER DISTRIBUTION CENTER
C139
A1 10RD
A1 12RD
S214
8W-70-17
A1 12RD
(4) C230
ACC
OFF
START
RUN
IGNITION SWITCH
(6) C230
A48 12VT
S202
8W-70-12
A48 12VT
C201
FUSE BLOCK
4 30A
C201
C7 12BK TN
S218
8W-70-19
HEAT MODE SELECTOR SWITCH
C239
C239
C43 12YL/BR
C7 12BK/TN
(1)
(4)
C139
C1 12DG
C1 12DG
S217
8W-70-18
C43 12YL/BR
C242
BLOWER RESISTOR
(4)
(2) C110
C43 12YL BR
LO
C236
C4 12TN
(3)
C236
M1
(1)
(5)
M2
(4)
C6 12LB
(1)
HI
(2)
BLOWER SWITCH
HEATER BLOWER MOTOR
(1) C110
Z1 12GY
S120
8W-70-9
Z1 12GY
G101
8W-15-2
C1 12DG
NOT USED
(2) C242
C1 12DG
J958W-13

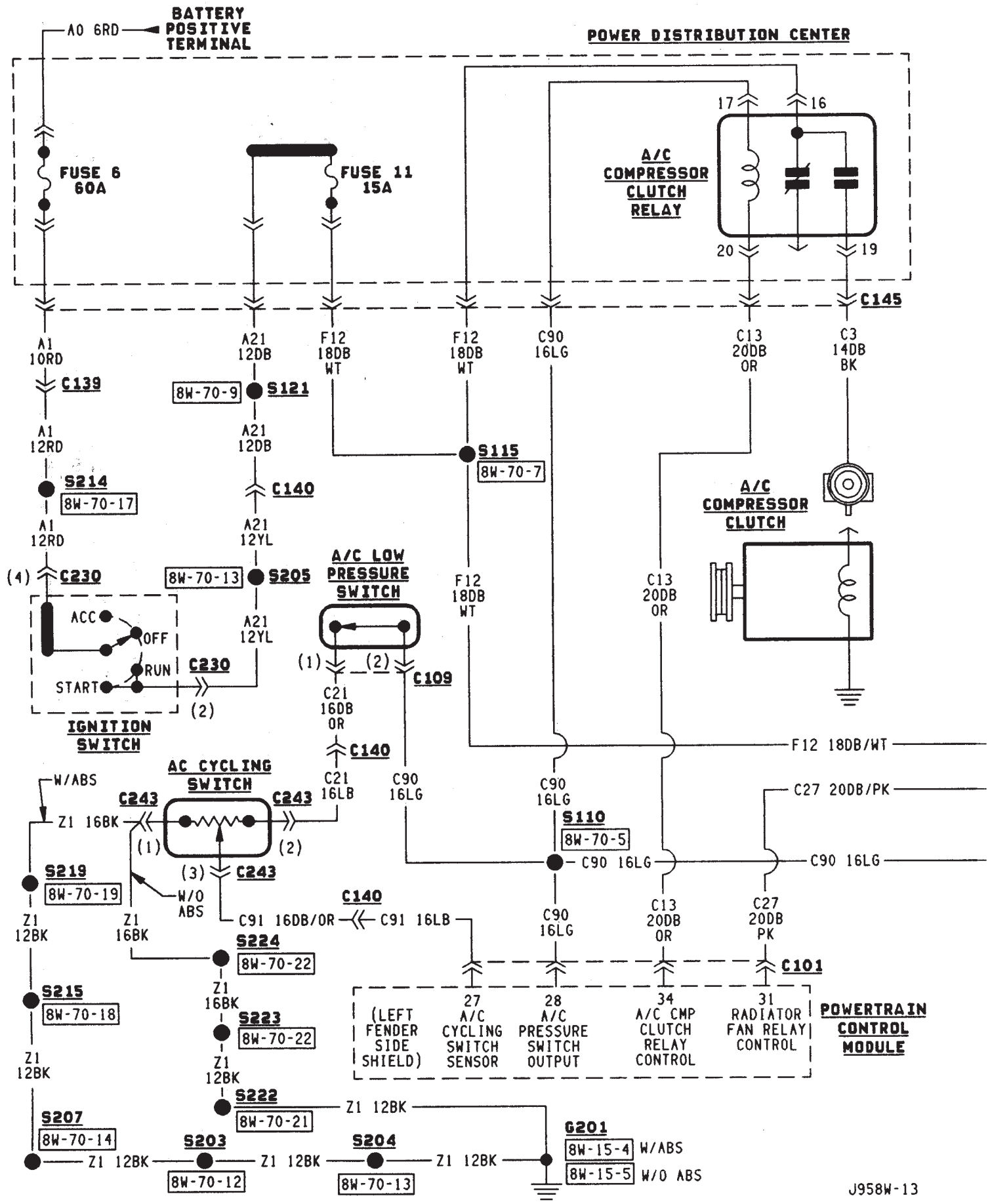
BATTERY POSITIVE TERMINAL
A0 6RD
POWER DISTRIBUTION CENTER
FUSE 6 60A
FUSE 11 15A
A/C COMPRESSOR CLUTCH RELAY
17
16
20
19
C145
A1 10RD
C139
A1 12RD
S214
8W-70-17
A1 12RD
(4) C230
A21 12DB
8W-70-9
S121
A21 12DB
C140
A21 12YL
8W-70-13
S205
A21 12YL
F12 18DB WT
S115
8W-70-7
F12 18DB WT
C90 16LG
C13 20DB OR
C3 14DB BK
A/C COMPRESSOR CLUTCH
A/C LOW PRESSURE SWITCH
ACC
OFF
RUN
START
C230
(2)
IGNITION SWITCH
(1)
(2)
C109
C21 16DB OR
C140
C21 16LB
C90 16LG
C13 20DB OR
F12 18DB/WT
C27 20DB/PK
W/ABS
AC CYCLING SWITCH
C243
C243
Z1 16BK
(1)
(2)
(3)
C243
S110
8W-70-5
C90 16LG
C90 16LG
S219
8W-70-19
Z1 12BK
W/O ABS
Z1 16BK
C91 16DB/OR
C140
C91 16LB
C90 16LG
C13 20DB OR
C27 20DB PK
S224
8W-70-22
Z1 16BK
C101
S215
8W-70-18
Z1 12BK
S223
8W-70-22
Z1 12BK
(LEFT FENDER SIDE SHIELD)
27 A/C CYCLING SWITCH SENSOR
28 A/C PRESSURE SWITCH OUTPUT
34 A/C CMP CLUTCH RELAY CONTROL
31 RADIATOR FAN RELAY CONTROL
POWERTRAIN CONTROL MODULE
S222
8W-70-21
Z1 12BK
S207
8W-70-14
Z1 12BK
S203
8W-70-12
Z1 12BK
S204
8W-70-13
Z1 12BK
G201
8W-15-4 W/ABS
8W-15-5 W/O ABS
J958W-13

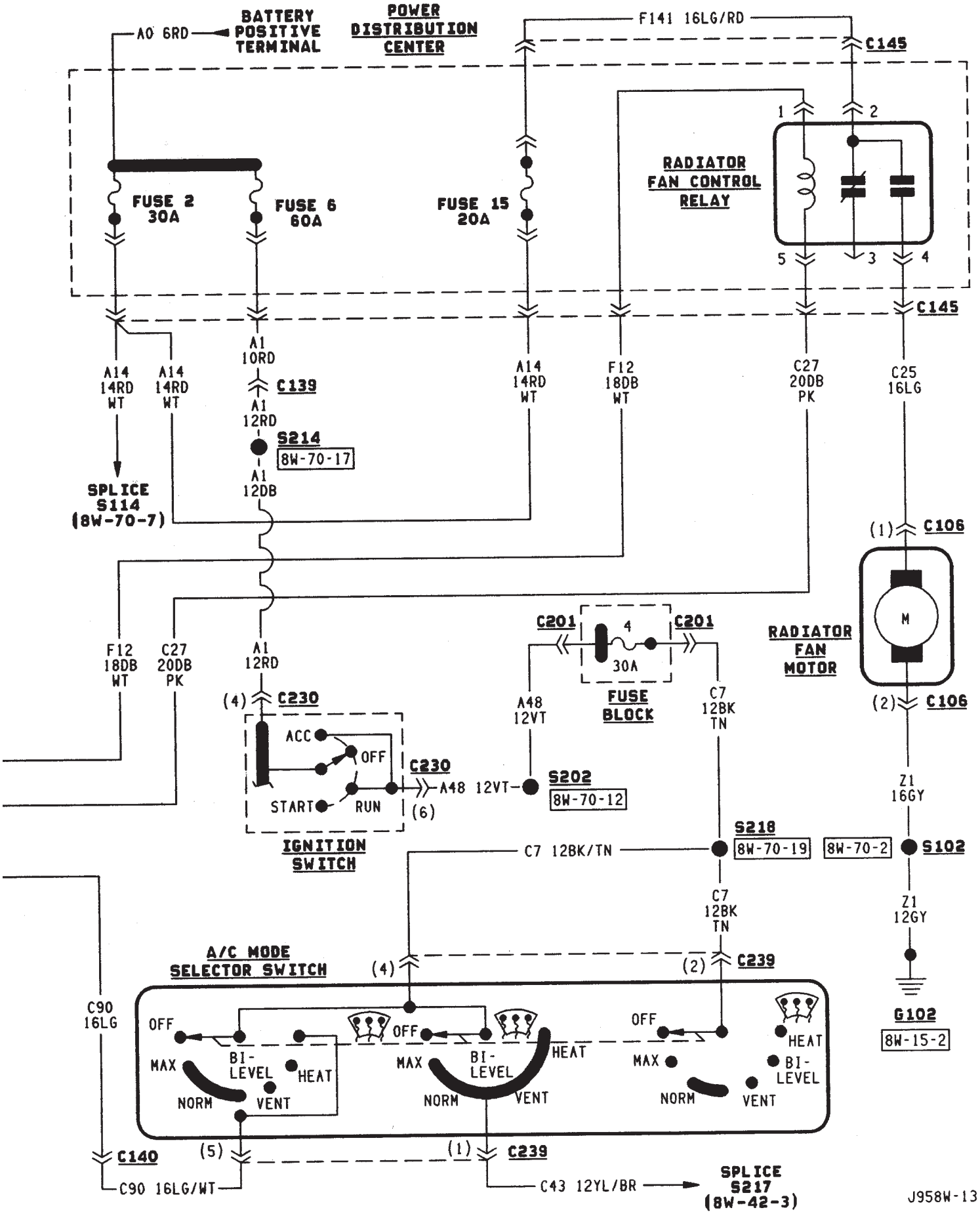
A0 6RD
BATTERY POSITIVE TERMINAL
POWER DISTRIBUTION CENTER
F141 16LG/RD
C145
FUSE 2 30A
FUSE 6 60A
FUSE 15 20A
RADIATOR FAN CONTROL RELAY
1
2
3
4
5
A14 14RD WT
A14 14RD WT
A1 10RD
C139
A1 12RD
S214
8W-70-17
A1 12DB
SPLICE S114 (8W-70-7)
A14 14RD WT
F12 18DB WT
C27 20DB PK
C25 16LG
C106
M
RADIATOR FAN MOTOR
F12 18DB WT
C27 20DB PK
A1 12RD
C230
C201
4
30A
FUSE BLOCK
A48 12VT
C7 12BK TN
ACC
OFF
START
RUN
(6)
S202
8W-70-12
IGNITION SWITCH
Z1 16GY
S218
8W-70-19
8W-70-2
S102
C7 12BK/TN
Z1 12GY
G102
8W-15-2
A/C MODE SELECTOR SWITCH
C239
C90 16LG
OFF
MAX
BI-LEVEL
HEAT
NORM
VENT
C140
C90 16LG/WT
C43 12YL/BR
SPLICE S217 (8W-42-3)
J958W-13

INTERIOR LIGHTING

INDEX

page

Cargo Lamp and Dome Lamp 1
Chime/Buzzer Module 2
Diagram Index 2
General Information 1
Glove Box Lamp 1
Ignition Switch Lamp 1
Instrument Panel Illumination Lamps 1
Reading Lamps 1
Underhood Lamp 1
Visor Vanity Mirror Lamps 1

GENERAL INFORMATION

Circuit M1 supplies power to the glove box lamp, dome lamp, reading lamps, cargo lamp and vanity lamps. Circuit M1 is protected by fuse 16 in the Power Distribution Center (PDC).

Circuit E2 supplies power for the instrument panel illumination lamps.

INSTRUMENT PANEL ILLUMINATION LAMPS

Circuit E2 from the headlamp switch splices to supply power to the following illumination lamps:

- Ash receiver lamp
- Cigar lighter lamp
- Transmission range indicator lamp
- Transfer case range indicator lamp
- A/C-Heater switch lamp
- Heated rear window switch lamp
- Rear wiper switch lamp
- Fog lamp switch lamp

Fuse 25 in the fuse block protects circuit E2. Circuit Z1 provides ground for all of the illumination lamps except for the cigar lighter lamp. The cigar lighter lamp is case grounded.

HELPFUL INFORMATION

Circuit E2 also supplies power to the radio, LCD relay and the illumination lamps in the instrument cluster.

IGNITION SWITCH LAMP

Circuit M50 supplies voltage to the ignition switch lamp. Circuit Z1 provides ground for the lamp.

GLOVE BOX LAMP

Circuit M1 from fuse 16 in the Power Distribution Center (PDC) powers the glove box lamp. A case grounded switch, in series after the lamp, closes when the glove box door is opened. The switch completes a path to ground on circuit Z1.

CARGO LAMP AND DOME LAMP

Circuit M1 from fuse 16 in the Power Distribution Center (PDC) supplies power to the cargo lamp and dome lamp. The M1 circuit is HOT at all times. The ground path for the lamp is provided in three different ways.

One way is through the door jamb switches. Circuit M2 connects to the door jamb switches to the dome lamp and cargo lamp. The switches are connected to ground circuit Z1. When a door is opened, the plunger in the switch closes, completing a path to ground.

The second way is through the liftgate switch. Circuit G71 connects to circuit M2 at the cargo lamp connector. Circuit G71 connects to the liftgate switch. The liftgate switch connects to ground circuit Z1. When the lift gate opens, the plunger in the switch closes, completing a path to ground.

The third ground path is through the headlamp switch. Circuit M2 is spliced in with the headlamp switch. When the operator turns the headlamp switch to the dome lamp ON position, a ground path is provided through the switch.

READING LAMPS

Circuit M1 from fuse 16 in the Power Distribution Center (PDC) supplies power to the reading lamps. Circuit M1 is HOT at all times. When the operator depresses the reading lamp, the reading lamp switch closes and supplies ground on circuit Z1.

VISOR VANITY MIRROR LAMPS

Circuit M1 from fuse 16 in the Power Distribution Center (PDC) supplies power to the vanity lamps. Circuit M1 is HOT at all times. When the vanity lamps switch closes, voltage flows to vanity mirror lamps. The vanity mirror is case grounded.

UNDERHOOD LAMP

Circuit A7 from fuse 16 in the Power Distribution Center (PDC) supplies battery voltage for the underhood lamp. A mercury switch, in series after the lamp, connects the lamp to ground on circuit Z1. When the hood is raised, mercury inside the switch moves to a position where it connects circuit M1 to ground circuit Z1, illuminating the lamp.

CHIME/BUZZER MODULE

The buzzer or optional chime module sounds an audible warning tone. The tone sounds for seat belt warning and when the ignition key is in the ignition switch while the drivers door is open. The tone also sounds when the ignition key is in the ON position while the drivers side seat belt is not buckled. Lastly, the tone sounds when the headlamps are ON when the ignition is OFF. Refer to Group 8U for system operation.

When the ignition switch is in the RUN or START position, fuse F87 from fuse 26 in the fuse block supplies power to the chime/buzzer module. Circuit A21 from the ignition switch supplies power to fuse 26.

Circuit L7 from fuse 9 in the fuse block also supplies power to the chime/buzzer module. Circuit A3 from fuse 5 in the Power Distribution Center (PDC) powers fuse 9.

When the parking lamps or headlamps are ON, the headlamp switch connects circuit G26 with the drivers side door jamb switch. Circuit G26 also connects to the key-in switch. Circuit M11 connects the key-in switch to the chime module and the headlamp switch.

If the headlamps are ON, and the drivers door opens, ground for the chime/buzzer is on circuit C26 from the headlamp switch through the door jamb switch to circuit Z1.

If the headlamps are OFF with the key in the ignition while the drivers side door is open, ground for the chime/buzzer is supplied through the key-in switch. The ground path is over circuit M11, through the closed key-in switch to circuit C26. From circuit C26, the ground path continues through the drivers door jamb switch to circuit Z1.

Circuit G11 from the buzzer powers the seat belt warning lamp in the instrument cluster. Circuit Z1 at the instrument cluster provides ground for the lamp.

Circuit G10 from the buzzer connects to the seat belt switch. When the seat belt switch closes a path to ground is completed on circuit Z1 and the tone sounds momentarily.

Circuit Z1 also grounds the chime buzzer module.

HELPFUL INFORMATION

Circuit F87 also powers the instrument cluster and the headlamp delay module.

DIAGRAM INDEX

Component	Page
Cargo Lamp	8W-44-6
Chime/Buzzer Module	8W-44-3
Courtesy Lamps	8W-44-5
Dome Lamp	8W-44-6
Door Jamb Switches	8W-44-7
Fuse 3 (PDC)	8W-44-6
Fuse 5 (PDC)	8W-44-5, 8
Fuse 6 (PDC)	8W-44-6
Fuse 9 (Fuse Block)	8W-44-3, 8
Fuse 16 (PDC)	8W-44-4, 6
Fuse 25 (Fuse Block)	8W-44-8
Fuse 26 (Fuse Block)	8W-44-3
Glove Box Lamp and Switch	8W-44-5
Headlamp Switch	8W-44-3, thru 8
Headlamp Delay Module	8W-44-3
Ignition Switch	8W-44-3
Instrument Cluster	8W-44-3, 9
Instrument Panel Illumination Lamps	8W-44-8, 9
Key-In Switch	8W-44-4
Liftgate Switch	8W-44-6
Reading Lamps	8W-44-6
Seat Belt Switch	8W-44-3
Telltale Connector (Instrument Cluster)	8W-44-3
Time Delay Relay	8W-44-4
Underhood Lamp	8W-44-4

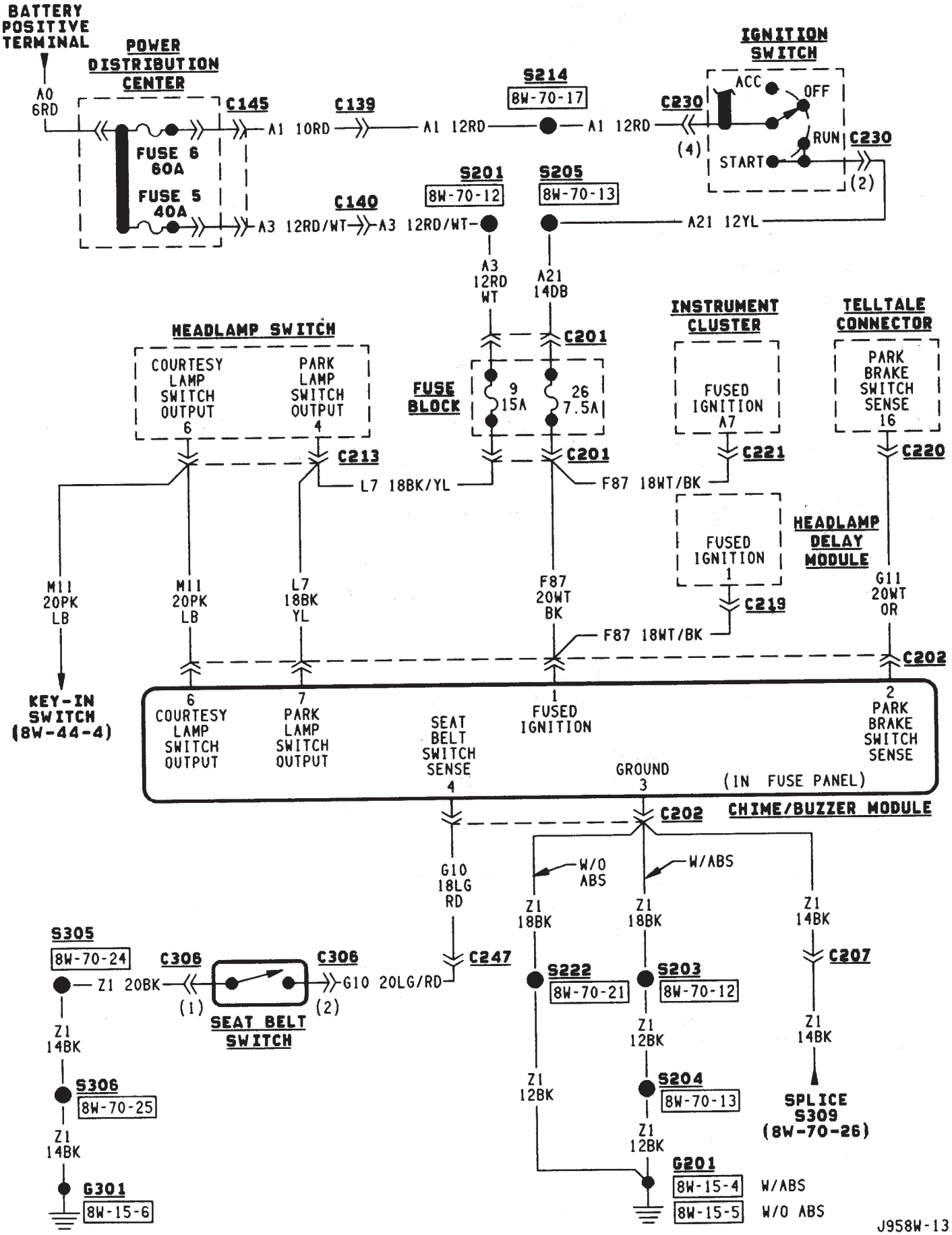
BATTERY POSITIVE TERMINAL
A0 6RD
POWER DISTRIBUTION CENTER
C145
FUSE 6 60A
FUSE 5 40A
A3 12RD/WT
C140
A3 12RD/WT
C139
A1 10RD
A1 12RD
S214
8W-70-17
A1 12RD
C230
IGNITION SWITCH
ACC
OFF
RUN
START
C230
(4)
(2)
A21 12YL
S201
8W-70-12
S205
8W-70-13
A3 12RD WT
A21 14DB
C201
HEADLAMP SWITCH
COURTESY LAMP SWITCH OUTPUT 6
PARK LAMP SWITCH OUTPUT 4
C213
FUSE BLOCK
9 15A
26 7.5A
C201
L7 18BK/YL
F87 18WT/BK
INSTRUMENT CLUSTER
FUSED IGNITION A7
C221
TELLTALE CONNECTOR
PARK BRAKE SWITCH SENSE 16
C220
FUSED IGNITION 1
C219
HEADLAMP DELAY MODULE
M11 20PK LB
M11 20PK LB
L7 18BK YL
F87 20WT BK
F87 18WT/BK
G11 20WT OR
C202
KEY-IN SWITCH (8W-44-4)
6 COURTESY LAMP SWITCH OUTPUT
7 PARK LAMP SWITCH OUTPUT
SEAT BELT SWITCH SENSE 4
1 FUSED IGNITION
GROUND 3
2 PARK BRAKE SWITCH SENSE
(IN FUSE PANEL)
C202
CHIME/BUZZER MODULE
G10 18LG RD
C247
W/O ABS
W/ABS
Z1 18BK
Z1 18BK
Z1 14BK
C207
S305
8W-70-24
C306
Z1 20BK
C306
G10 20LG/RD
(1)
(2)
SEAT BELT SWITCH
S222
8W-70-21
S203
8W-70-12
Z1 14BK
Z1 12BK
Z1 14BK
S306
8W-70-25
Z1 12BK
S204
8W-70-13
SPLICE S309 (8W-70-26)
Z1 14BK
Z1 12BK
G301
8W-15-6
G201
8W-15-4 W/ABS
8W-15-5 W/O ABS
J958W-13

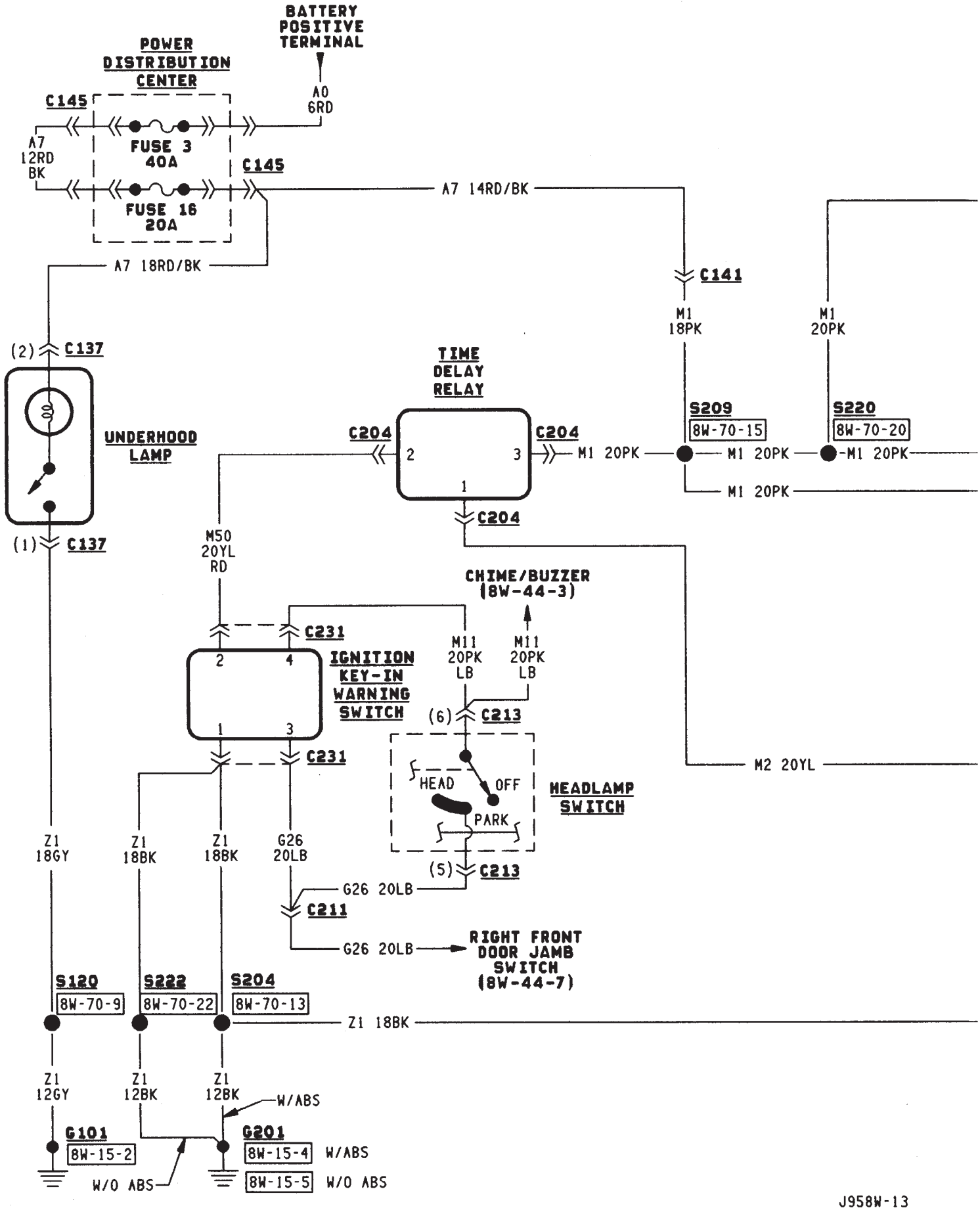
BATTERY POSITIVE TERMINAL
POWER DISTRIBUTION CENTER
C145
A0 6RD
A7 12RD BK
FUSE 3 40A
FUSE 16 20A
C145
A7 14RD/BK
A7 18RD/BK
C141
M1 18PK
M1 20PK
(2) C137
UNDERHOOD LAMP
(1) C137
TIME DELAY RELAY
C204
2
3
1
C204
C204
M1 20PK
S209
8W-70-15
S220
8W-70-20
M1 20PK
M1 20PK
M1 20PK
C204
M50 20YL RD
CHIME/BUZZER (8W-44-3)
C231
2
4
IGNITION KEY-IN WARNING SWITCH
1
3
C231
M11 20PK LB
M11 20PK LB
(6) C213
HEAD
OFF
PARK
HEADLAMP SWITCH
(5) C213
M2 20YL
Z1 18GY
Z1 18BK
Z1 18BK
G26 20LB
G26 20LB
C211
G26 20LB
RIGHT FRONT DOOR JAMB SWITCH (8W-44-7)
S120
8W-70-9
S222
8W-70-22
S204
8W-70-13
Z1 18BK
Z1 12GY
Z1 12BK
Z1 12BK
W/ABS
G101
8W-15-2
W/O ABS
G201
8W-15-4
W/ABS
8W-15-5
W/O ABS

J958W-13

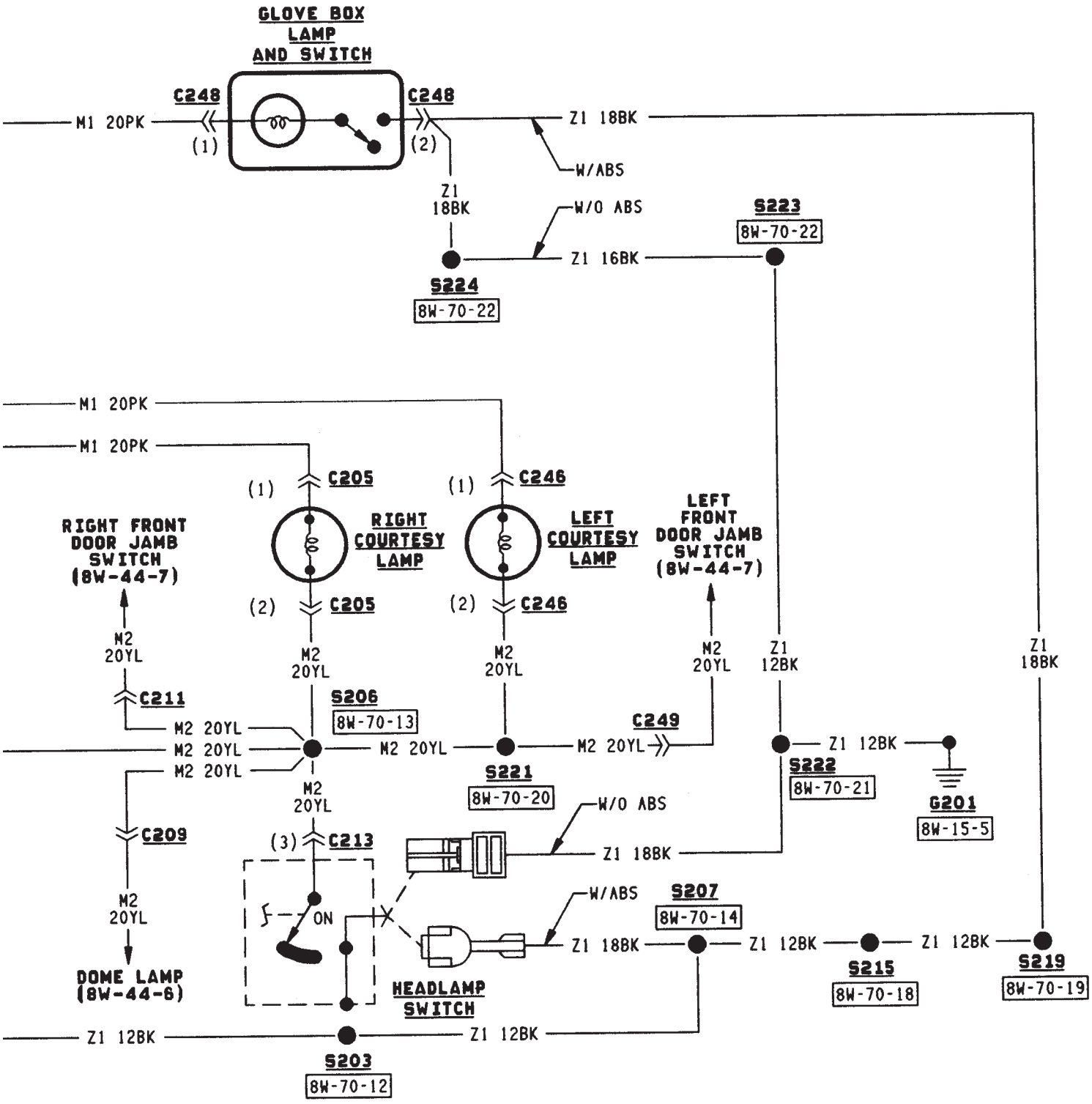
GLOVE BOX LAMP AND SWITCH
C248
C248
M1 20PK
(1)
(2)
Z1 18BK
W/ABS
Z1 18BK
W/O ABS
S223
8W-70-22
Z1 16BK
S224
8W-70-22
M1 20PK
M1 20PK
(1) C205
(1) C246
RIGHT FRONT DOOR JAMB SWITCH (8W-44-7)
RIGHT COURTESY LAMP
LEFT COURTESY LAMP
LEFT FRONT DOOR JAMB SWITCH (8W-44-7)
(2) C205
(2) C246
M2 20YL
M2 20YL
M2 20YL
M2 20YL
Z1 12BK
Z1 18BK
C211
S206
8W-70-13
M2 20YL
C249
M2 20YL
M2 20YL
M2 20YL
M2 20YL
S221
8W-70-20
Z1 12BK
S222
8W-70-21
G201
8W-15-5
M2 20YL
W/O ABS
C209
(3) C213
Z1 18BK
M2 20YL
W/ABS
S207
8W-70-14
ON
Z1 18BK
Z1 12BK
Z1 12BK
S215
8W-70-18
S219
8W-70-19
DOME LAMP (8W-44-6)
HEADLAMP SWITCH
Z1 12BK
Z1 12BK
S203
8W-70-12

J958W-13

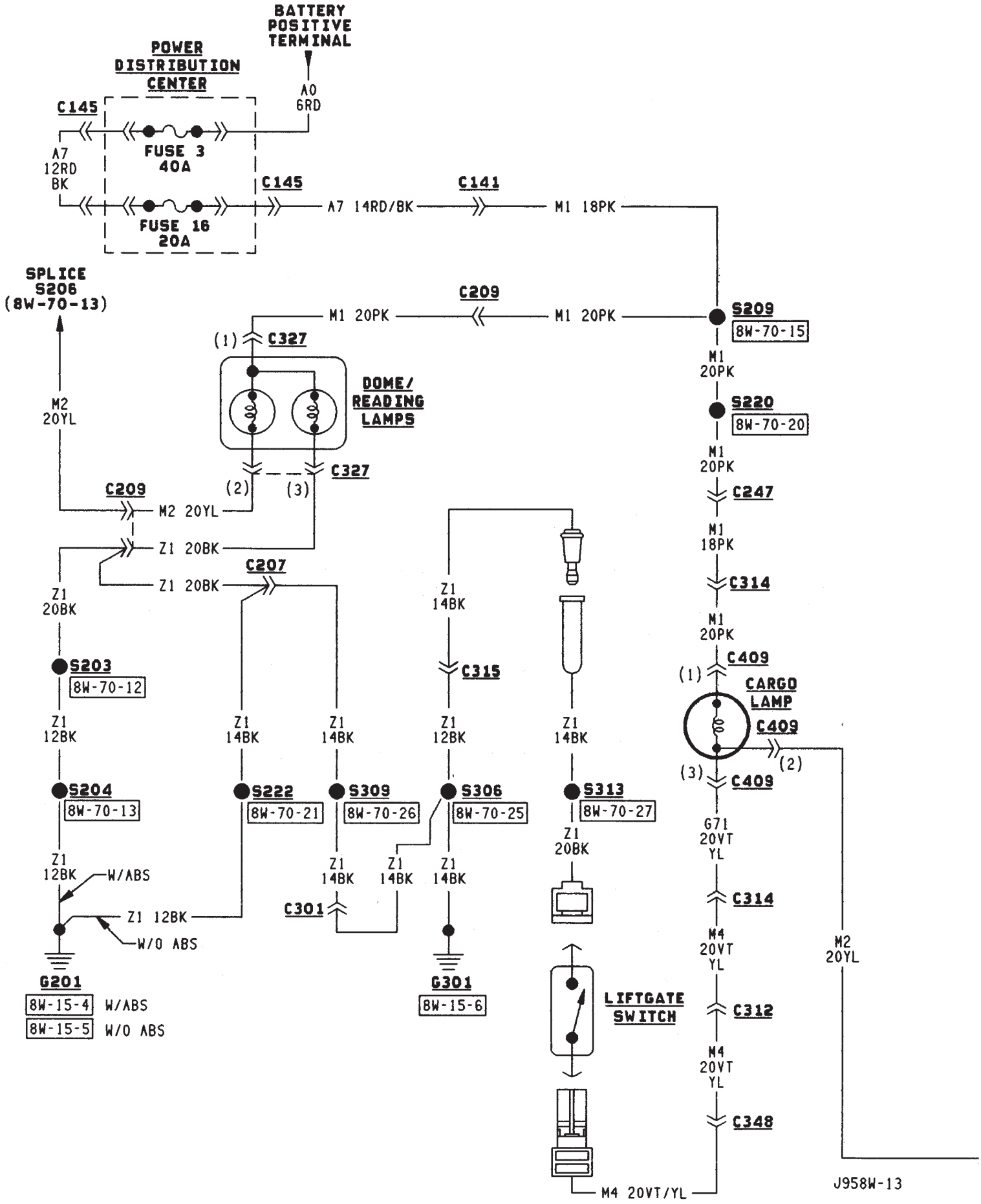
BATTERY POSITIVE TERMINAL
POWER DISTRIBUTION CENTER
A0 6RD
C145
FUSE 3 40A
A7 12RD BK
C145
FUSE 16 20A
A7 14RD/BK
C141
M1 18PK
SPLICE S206 (8W-70-13)
C209
M1 20PK
M1 20PK
S209
8W-70-15
(1) C327
DOME/ READING LAMPS
M1 20PK
S220
8W-70-20
M2 20YL
M1 20PK
C247
(2)
(3)
C327
C209
M2 20YL
M1 18PK
Z1 20BK
C314
C207
Z1 20BK
Z1 14BK
M1 20PK
Z1 20BK
C315
C409
(1)
CARGO LAMP
S203
8W-70-12
C409
(2)
(3)
C409
Z1 12BK
Z1 14BK
Z1 14BK
Z1 12BK
Z1 14BK
G71 20VT YL
S204
8W-70-13
S222
8W-70-21
S309
8W-70-26
S306
8W-70-25
S313
8W-70-27
Z1 20BK
Z1 12BK
W/ABS
Z1 14BK
Z1 14BK
Z1 14BK
C314
C301
Z1 12BK
W/O ABS
M4 20VT YL
M2 20YL
LIFTGATE SWITCH
C312
M4 20VT YL
C348
G201
8W-15-4 W/ABS
8W-15-5 W/O ABS
G301
8W-15-6
M4 20VT/YL
J958W-13

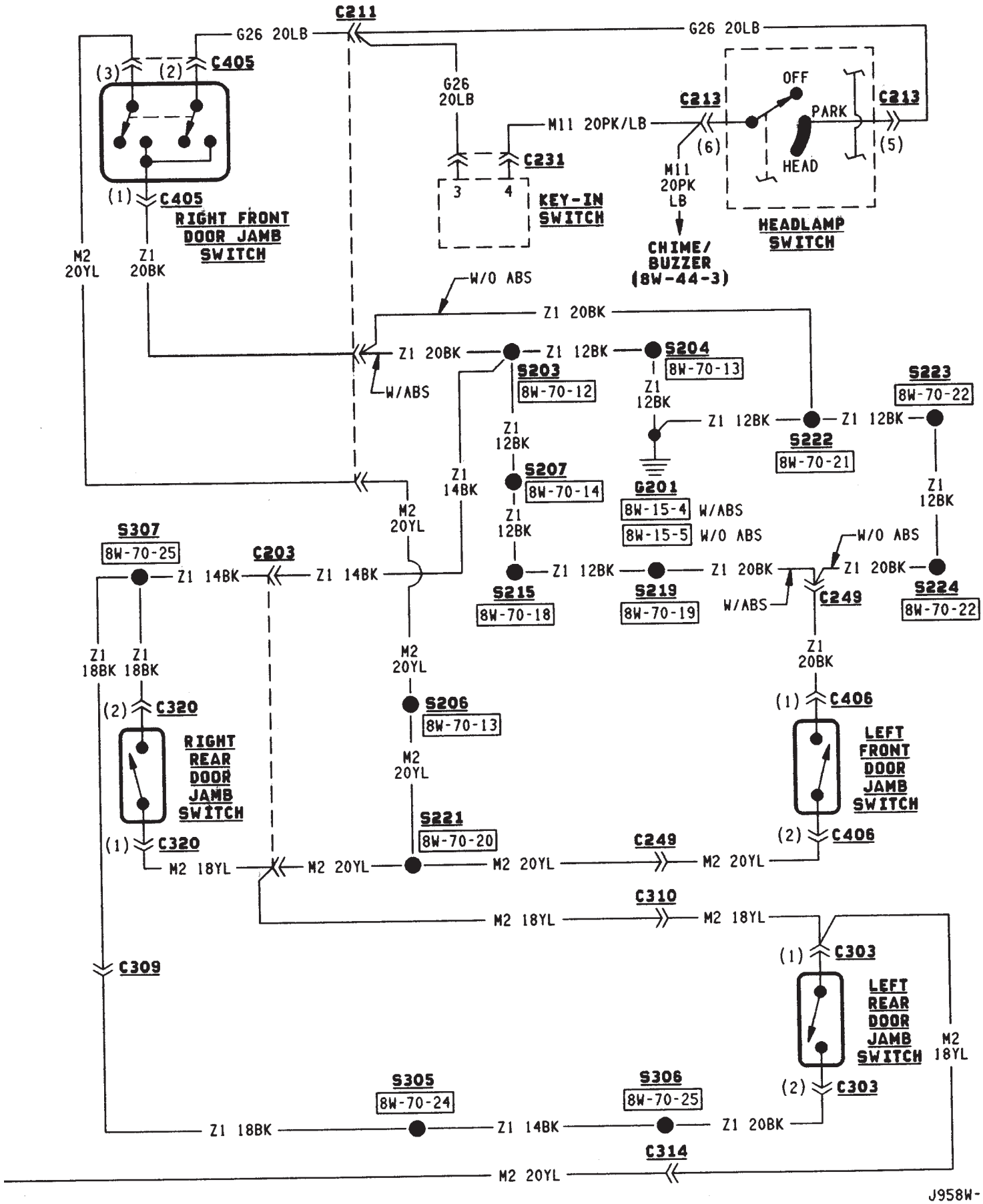
C211
G26 20LB
G26 20LB
C405
(3)
(2)
G26 20LB
C213
OFF
PARK
HEAD
C213
M11 20PK/LB
(6)
(5)
C231
3
4
KEY-IN SWITCH
M11 20PK LB
HEADLAMP SWITCH
(1) C405
RIGHT FRONT DOOR JAMB SWITCH
M2 20YL
Z1 20BK
CHIME/ BUZZER (8W-44-3)
W/O ABS
Z1 20BK
Z1 20BK
Z1 12BK
S204
8W-70-13
S203
8W-70-12
W/ABS
Z1 12BK
S223
8W-70-22
Z1 12BK
Z1 12BK
Z1 12BK
S222
8W-70-21
Z1 14BK
S207
8W-70-14
G201
8W-15-4 W/ABS
8W-15-5 W/O ABS
Z1 12BK
M2 20YL
Z1 12BK
S307
8W-70-25
C203
Z1 14BK
Z1 14BK
Z1 12BK
Z1 20BK
W/O ABS
Z1 20BK
S215
8W-70-18
S219
8W-70-19
W/ABS
C249
S224
8W-70-22
Z1 18BK
Z1 18BK
M2 20YL
Z1 20BK
(2) C320
S206
8W-70-13
(1) C406
RIGHT REAR DOOR JAMB SWITCH
M2 20YL
LEFT FRONT DOOR JAMB SWITCH
S221
8W-70-20
(1) C320
(2) C406
M2 18YL
M2 20YL
M2 20YL
C249
M2 20YL
C310
M2 18YL
M2 18YL
(1) C303
C309
LEFT REAR DOOR JAMB SWITCH
M2 18YL
S305
8W-70-24
S306
8W-70-25
(2) C303
Z1 18BK
Z1 14BK
Z1 20BK
C314
M2 20YL
J958W-13

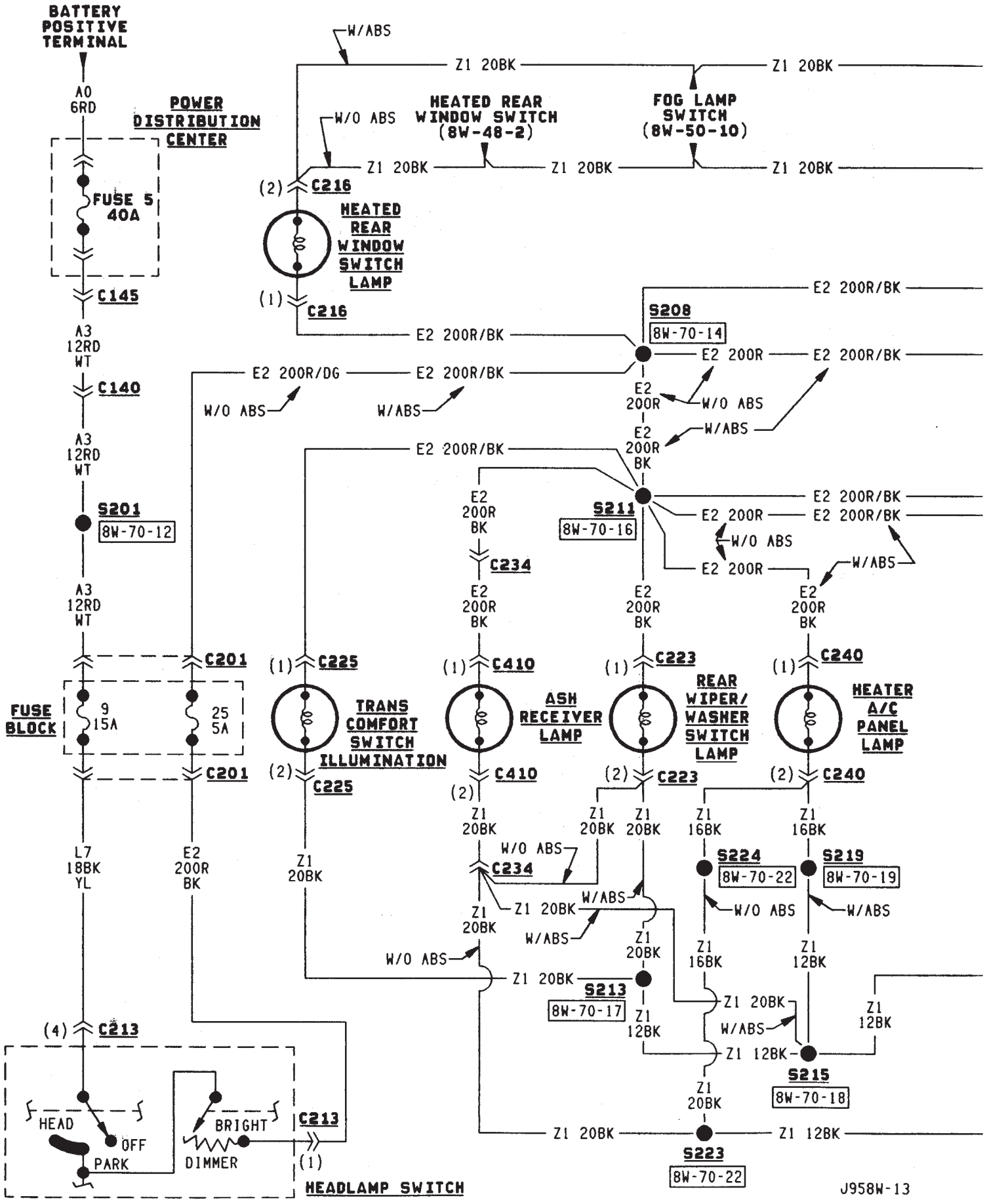
BATTERY POSITIVE TERMINAL
A0 6RD
POWER DISTRIBUTION CENTER
FUSE 5 40A
C145
A3 12RD WT
C140
A3 12RD WT
S201
8W-70-12
A3 12RD WT
C201
FUSE BLOCK
9 15A
25 5A
C201
L7 18BK YL
E2 200R BK
(4) C213
HEAD
OFF
PARK
BRIGHT
DIMMER
C213
(1)
HEADLAMP SWITCH
W/ABS
Z1 20BK
Z1 20BK
W/O ABS
HEATED REAR WINDOW SWITCH (8W-48-2)
FOG LAMP SWITCH (8W-50-10)
Z1 20BK
Z1 20BK
Z1 20BK
(2) C216
HEATED REAR WINDOW SWITCH LAMP
(1) C216
E2 200R/BK
S208
8W-70-14
E2 200R/BK
E2 200R
E2 200R/BK
E2 200R/DG
E2 200R/BK
W/O ABS
W/ABS
E2 200R
W/O ABS
W/ABS
E2 200R BK
E2 200R/BK
E2 200R/BK
S211
8W-70-16
E2 200R
E2 200R/BK
W/O ABS
E2 200R
W/ABS
E2 200R BK
C234
E2 200R BK
E2 200R BK
E2 200R BK
(1) C225
(1) C410
(1) C223
(1) C240
TRANS COMFORT SWITCH ILLUMINATION
ASH RECEIVER LAMP
REAR WIPER/ WASHER SWITCH LAMP
HEATER A/C PANEL LAMP
(2) C225
(2) C410
(2) C223
(2) C240
Z1 20BK
Z1 20BK
Z1 20BK
Z1 16BK
Z1 16BK
W/O ABS
C234
S224
8W-70-22
S219
8W-70-19
Z1 20BK
W/ABS
W/O ABS
W/ABS
Z1 20BK
W/ABS
Z1 20BK
Z1 16BK
Z1 12BK
W/O ABS
Z1 20BK
S213
8W-70-17
Z1 20BK
Z1 12BK
W/ABS
Z1 12BK
Z1 12BK
S215
8W-70-18
Z1 20BK
Z1 20BK
Z1 12BK
S223
8W-70-22
J958W-13

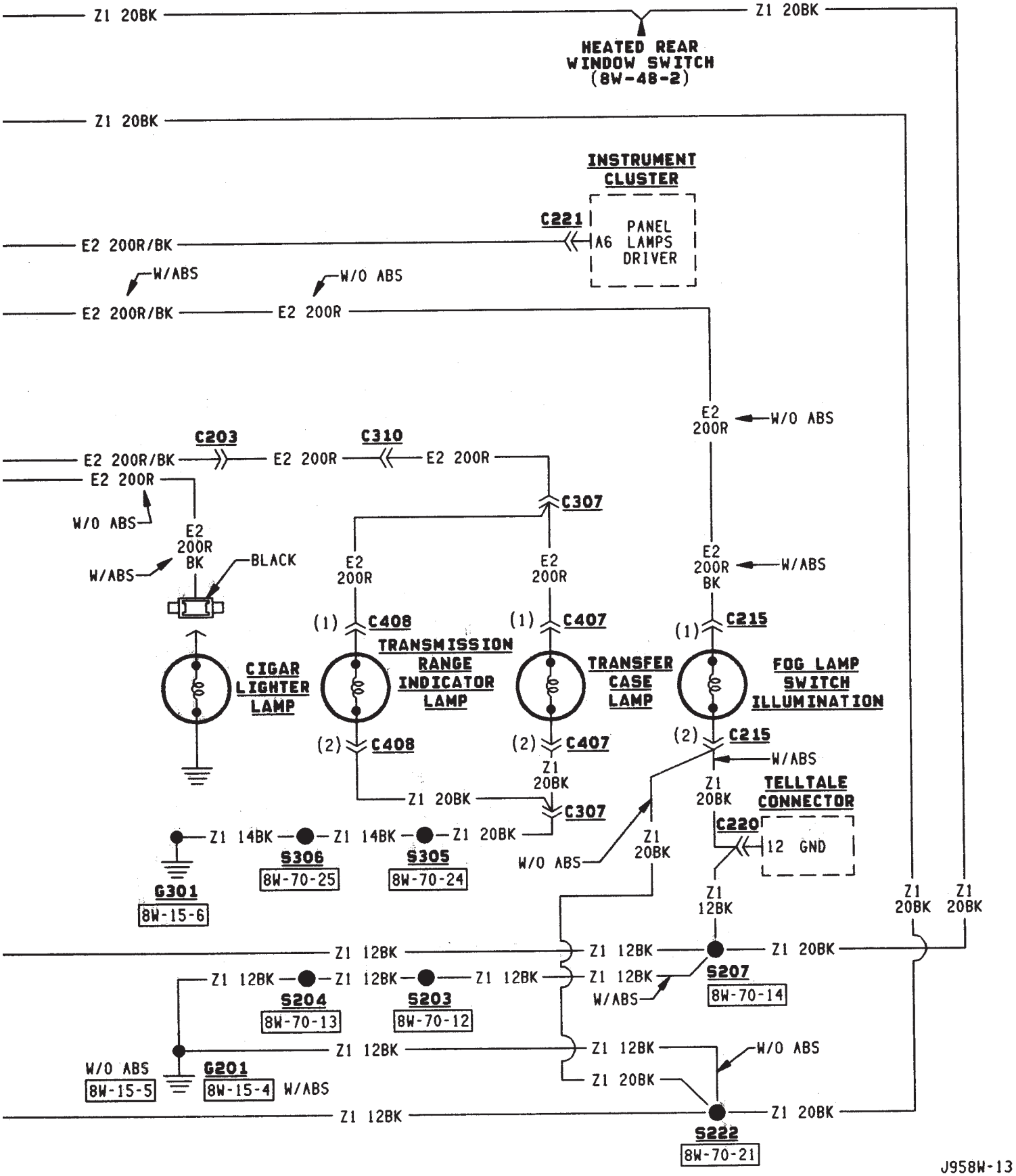
Z1 20BK
Z1 20BK
HEATED REAR WINDOW SWITCH (8W-48-2)
Z1 20BK
INSTRUMENT CLUSTER
C221
A6 PANEL LAMPS DRIVER
E2 200R/BK
W/ABS
W/O ABS
E2 200R/BK
E2 200R
E2 200R W/O ABS
C203
C310
E2 200R/BK
E2 200R
E2 200R
C307
W/O ABS
E2 200R BK
W/ABS
BLACK
E2 200R
E2 200R
E2 200R W/ABS
E2 200R BK
(1) C408
(1) C407
(1) C215
CIGAR LIGHTER LAMP
TRANSMISSION RANGE INDICATOR LAMP
TRANSFER CASE LAMP
FOG LAMP SWITCH ILLUMINATION
(2) C408
(2) C407
(2) C215
W/ABS
Z1 20BK
Z1 20BK
Z1 20BK
C307
TELLTALE CONNECTOR
C220
12 GND
Z1 14BK
Z1 14BK
Z1 20BK
S306
8W-70-25
S305
8W-70-24
W/O ABS
Z1 20BK
G301
8W-15-6
Z1 12BK
Z1 20BK
Z1 20BK
Z1 12BK
Z1 12BK
Z1 12BK
Z1 12BK
Z1 12BK
Z1 12BK
S207
8W-70-14
W/ABS
S204
8W-70-13
S203
8W-70-12
Z1 12BK
Z1 12BK
W/O ABS
Z1 20BK
W/O ABS
8W-15-5
G201
8W-15-4
W/ABS
Z1 12BK
Z1 20BK
S222
8W-70-21

J958W-13

RADIO

RADIO

When the ignition switch is in the ACCESSORY or RUN position, it connects circuit A1 from fuse 6 in the Power Distribution Center (PDC) to circuit A48. Circuit A48 powers circuit F85 through fuse 13 in the fuse block. Circuit F85 powers the radio.

Circuit Z1 provides ground for the radio. The antenna connects to the rear of the radio.

RADIO MEMORY

Circuit M1 from fuse 16 in the Power Distribution Center (PDC) supplies power for the radio memory.

Circuit A7 from fuse 3 in the PDC supplies voltage to fuse 16. Circuits A7 and M1 are HOT at all times.

RADIO ILLUMINATION

Circuit E2 supplies battery voltage to the radio illumination lamps when the headlamps or parking lamps are on and the dimmer switch is in the Low or On positions.

Circuit X5 supplies battery voltage for the radio clock and station frequency display. Circuit X5 originates at the radio illumination relay and is fed by either circuit F85 or circuit E2 depending on the switch position inside the relay.

When the headlamps and parking lamps are off, the radio illumination relay is in its normal At Rest position. In the At Rest position, the relay connects circuit F85 from fuse 13 in the fuse block to circuit X5.

When the headlamps or parking lamps are on, circuit L90 from the headlamp switch supplies battery voltage to the coil side of the radio illumination relay. Circuit Z1 provides ground for the coil side of the relay.

When voltage is present on circuit L90, the radio illumination relay switches from its At Rest position to connect circuit E2 to circuit X5.

HELPFUL INFORMATION

- Circuit A48 supplies voltage to fuse 13 in the fuse block for circuit F85 when the ignition switch is in the ACCESSORY or RUN positions. In these positions, the ignition switch connects circuit A1 from fuse 6 in the PDC to circuit A48.
- Circuit A3 from fuse 5 in the PDC supplies power to the fuse block for fuse 9. Fuse 9 protects circuit L7. When the headlamps or parking lamps are ON, the headlamp switch connects circuit L7 to circuit L90. When the adjustable dimmer switch is in the LOW to ON positions, it internally connects circuit L7 to circuit E2. Circuit E2 powers fuse 25 in the fuse block. Circuit E2 continues through fuse 25.

POWER ANTENNA

The Power Antenna Relay supplies power to raise and lower the antenna. Circuit F60 from fuse 7 in the fuse block powers the relay. Circuit Z1 provides ground for the relay.

When the radio is turned on, circuit X60 from the radio energizes the relay to raise the antenna.

SPEAKERS

Circuit X53 feeds the left front speakers. Circuit X55 is the return from the speakers to the radio.

Circuit X54 feeds the right front speakers. Circuit X56 is the return from the speakers to the radio.

Circuit X51 feeds the left rear speaker. Circuit X57 is the return from the speaker to the radio.

Circuit X52 feeds the right rear speaker. Circuit X58 is the return from the speaker to the radio.

DIAGRAM INDEX

Component	Page
Fuse 3 (PDC)	8W-47-2, 4
Fuse 5 (PDC)	8W-47-2, 4, 5
Fuse 6 (PDC)	8W-47-2, 4
Fuse 7 (PDC)	8W-47-2, 4
Fuse 9 (Fuse Block)	8W-47-2, 4, 5
Fuse 13 (Fuse Block)	8W-47-2, 4
Fuse 16 (PDC)	8W-47-2, 4
Fuse 25 (Fuse Block)	8W-47-2, 4
Headlamp Switch	8W-47-2, 4
Ignition Switch	8W-47-2
LCD Relay	8W-47-3, 5
Power Antenna	8W-47-6
Power Antenna Relay	8W-47-6
Radio	8W-47-2 thru 8
Speakers	8W-47-7, 8

W/ABS

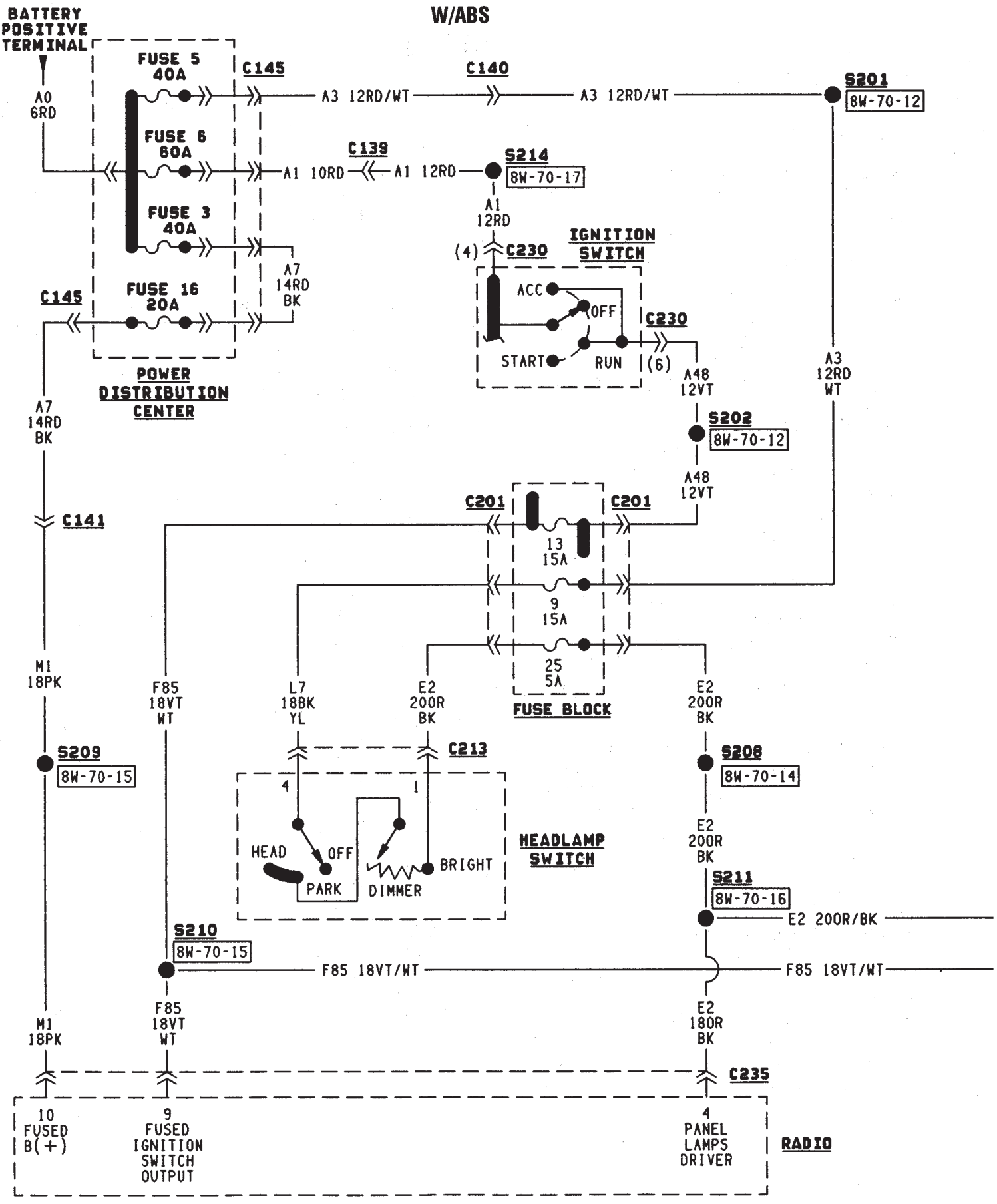

J958W-13

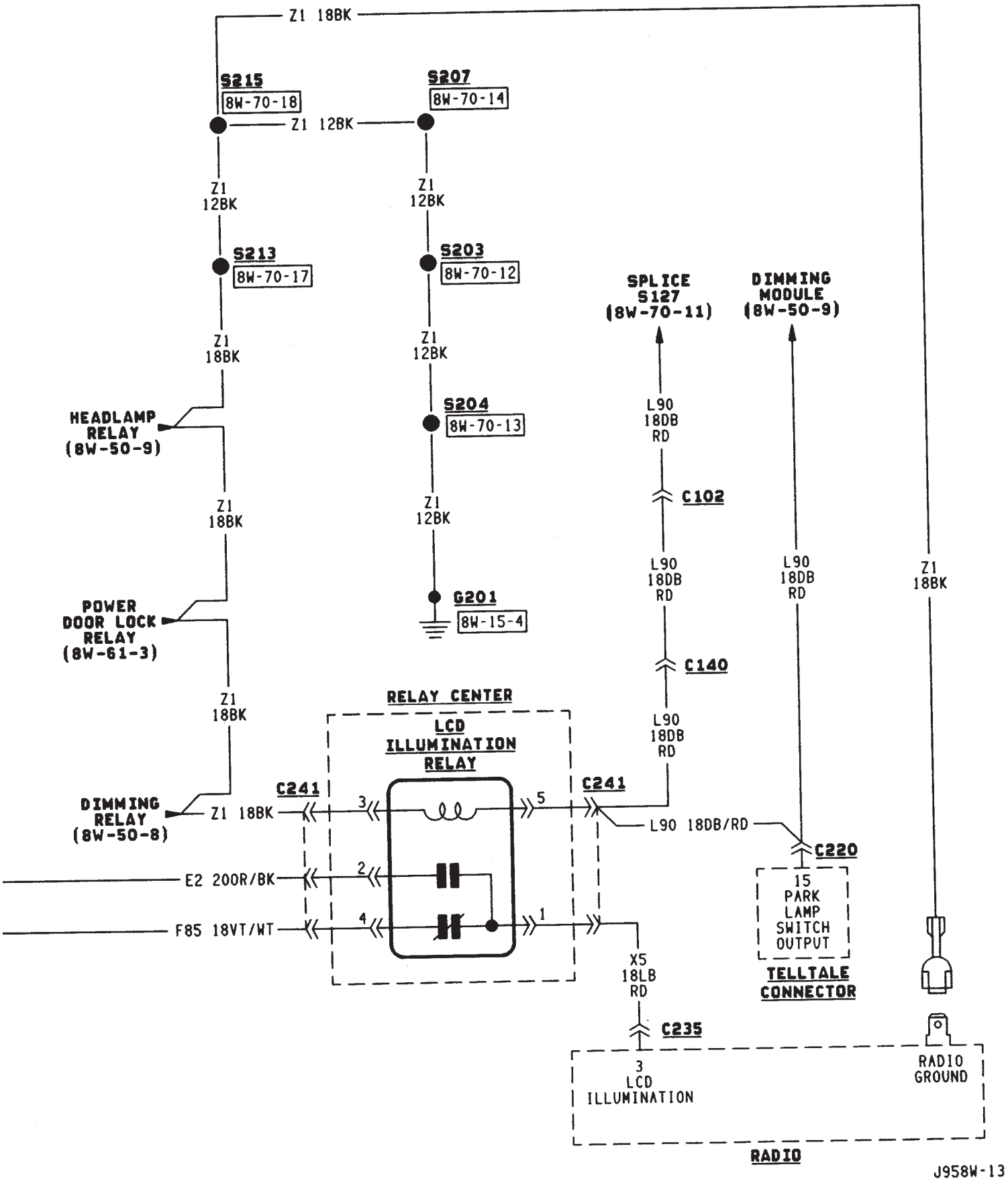
Z1 18BK
S215
8W-70-18
S207
8W-70-14
Z1 12BK
Z1 12BK
Z1 12BK
S213
8W-70-17
S203
8W-70-12
Z1 18BK
Z1 12BK
SPLICE S127 (8W-70-11)
DIMMING MODULE (8W-50-9)
HEADLAMP RELAY (8W-50-9)
S204
8W-70-13
L90 18DB RD
C102
Z1 18BK
Z1 12BK
L90 18DB RD
L90 18DB RD
Z1 18BK
G201
8W-15-4
C140
POWER DOOR LOCK RELAY (8W-61-3)
L90 18DB RD
Z1 18BK
RELAY CENTER
LCD ILLUMINATION RELAY
C241
C241
DIMMING RELAY (8W-50-8)
Z1 18BK
3
5
L90 18DB/RD
C220
E2 200R/BK
2
15 PARK LAMP SWITCH OUTPUT
TELLTALE CONNECTOR
F85 18VT/WT
4
1
X5 18LB RD
C235
RADIO GROUND
3 LCD ILLUMINATION
RADIO
J958W-13

W/O ABS

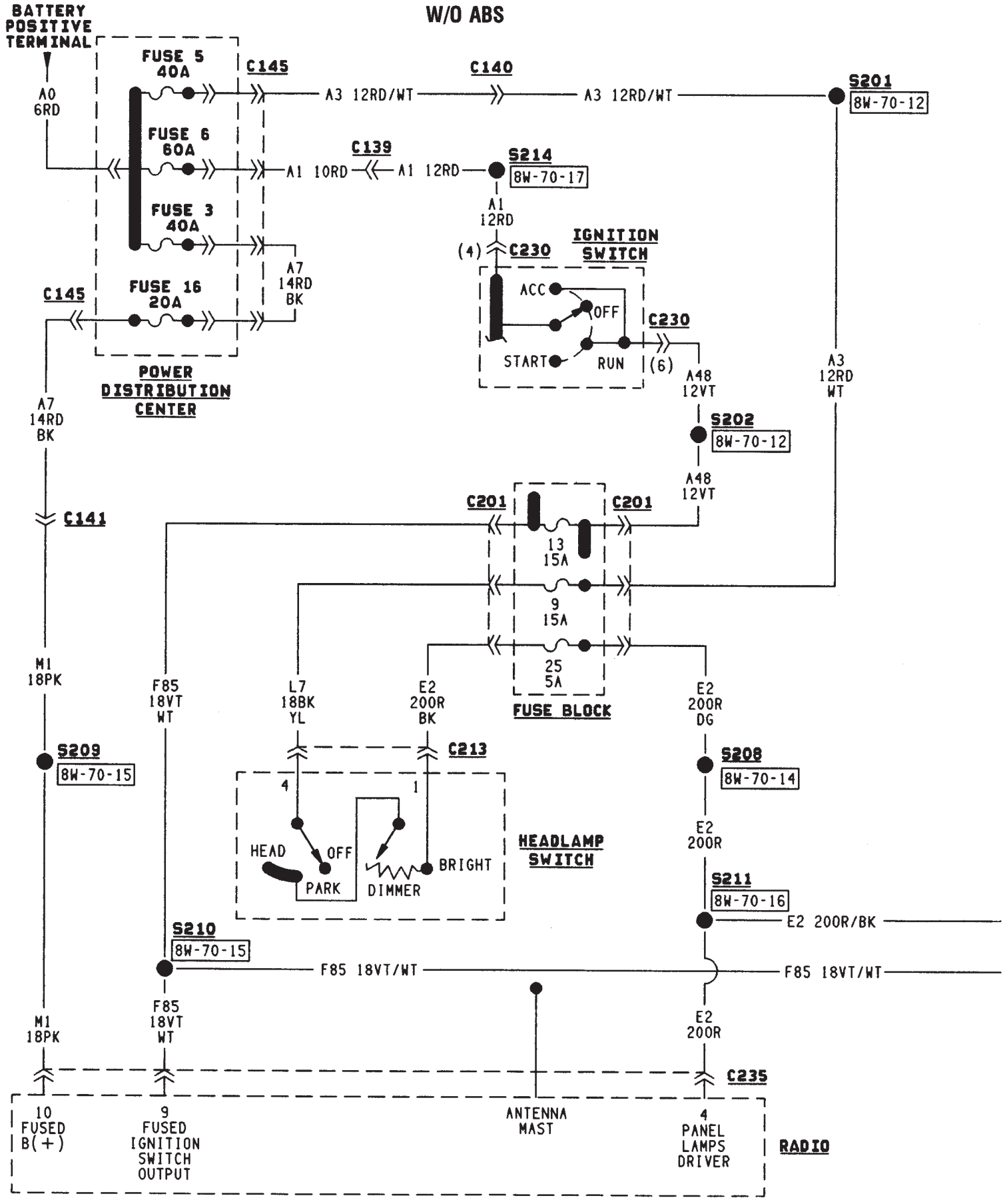

J958W-13

W/O ABS

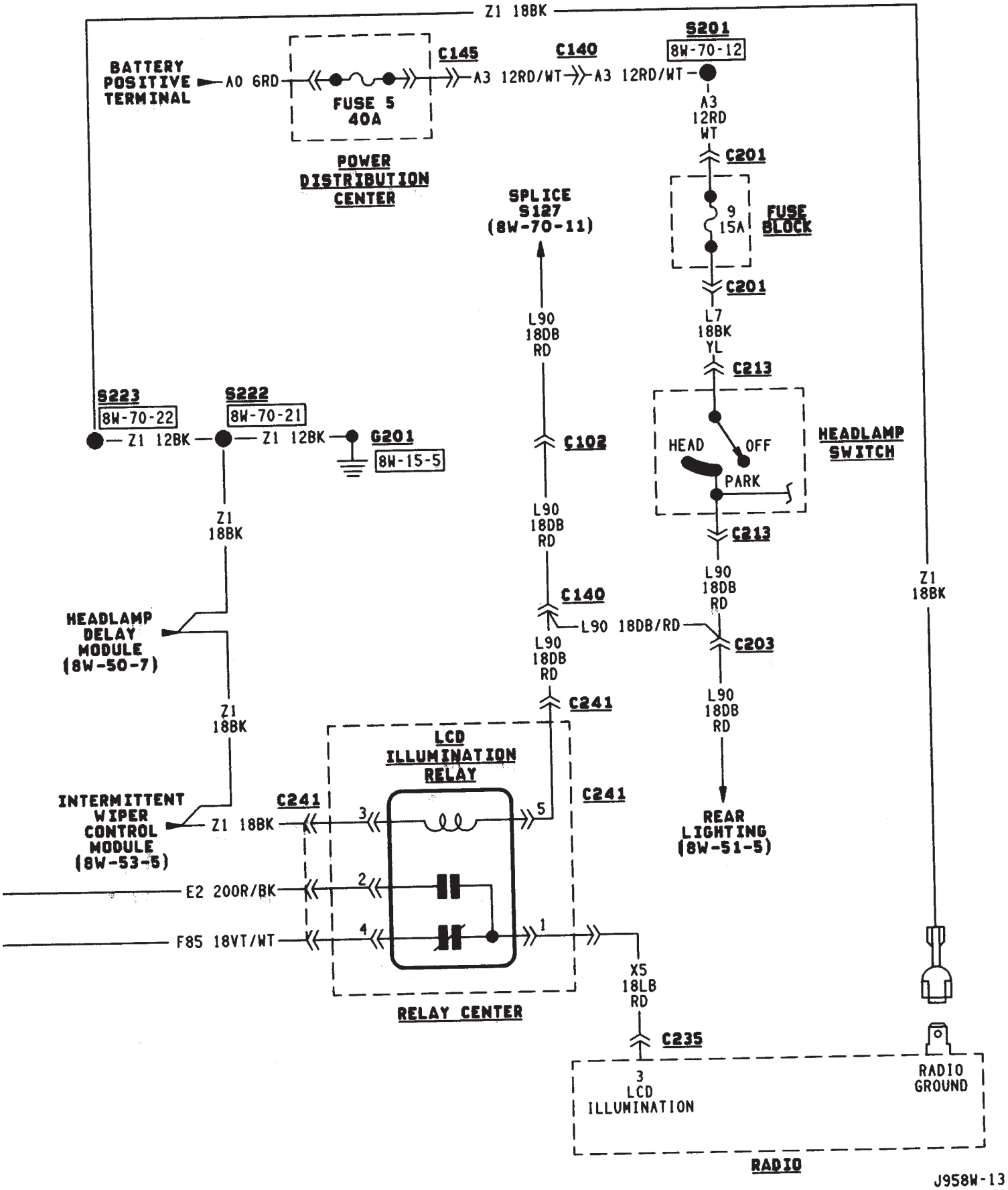

J958W-13

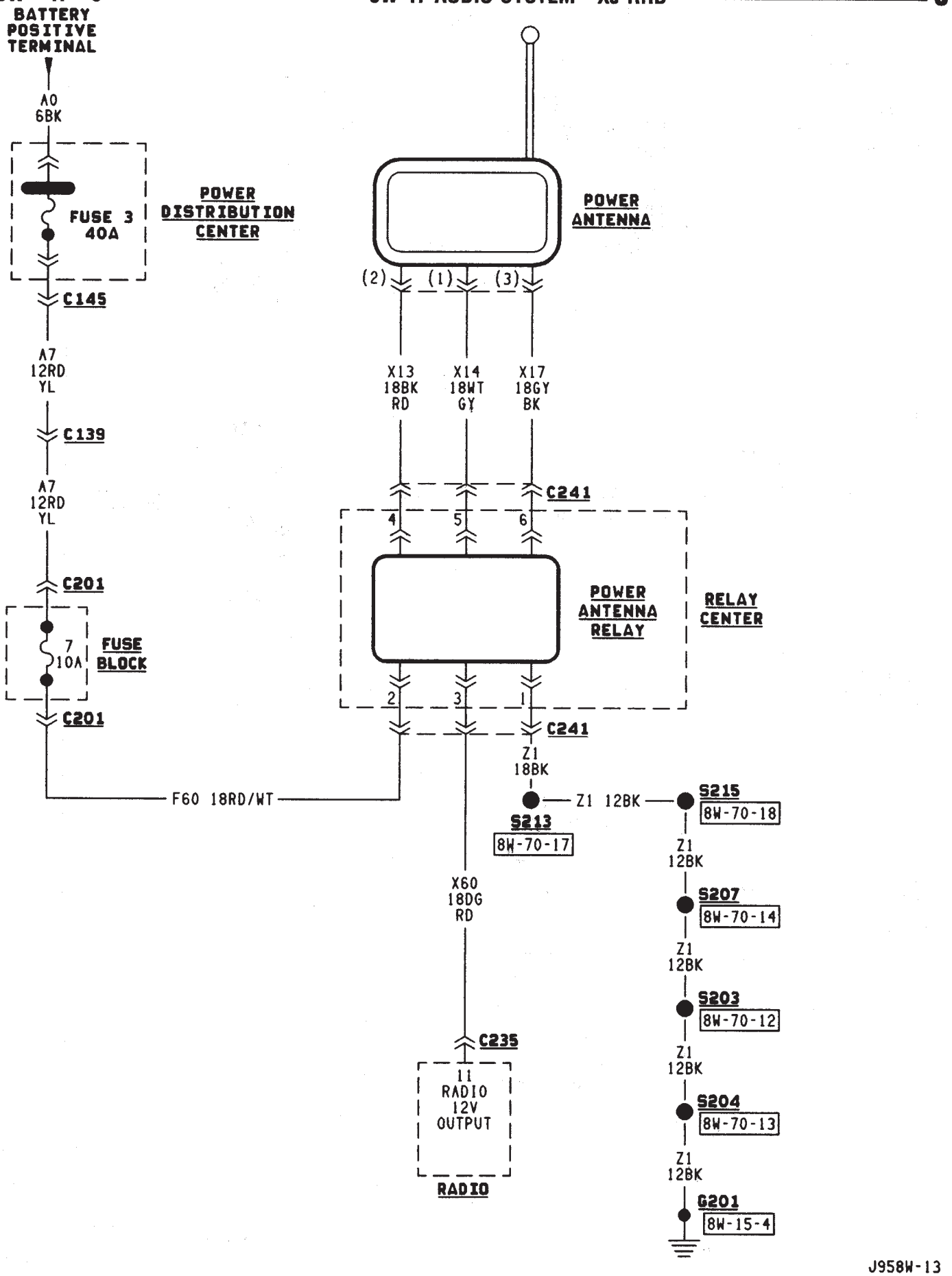
BATTERY POSITIVE TERMINAL
A0 6BK
FUSE 3 40A
POWER DISTRIBUTION CENTER
C145
A7 12RD YL
C139
A7 12RD YL
C201
7 10A
FUSE BLOCK
C201
F60 18RD/WT
POWER ANTENNA
(2) (1) (3)
X13 18BK RD
X14 18WT GY
X17 18GY BK
C241
4 5 6
POWER ANTENNA RELAY
RELAY CENTER
2 3 1
C241
Z1 18BK
Z1 12BK
S215
8W-70-18
S213
8W-70-17
Z1 12BK
S207
8W-70-14
Z1 12BK
S203
8W-70-12
Z1 12BK
S204
8W-70-13
Z1 12BK
G201
8W-15-4
X60 18DG RD
C235
11 RADIO 12V OUTPUT
RADIO

J958W-13

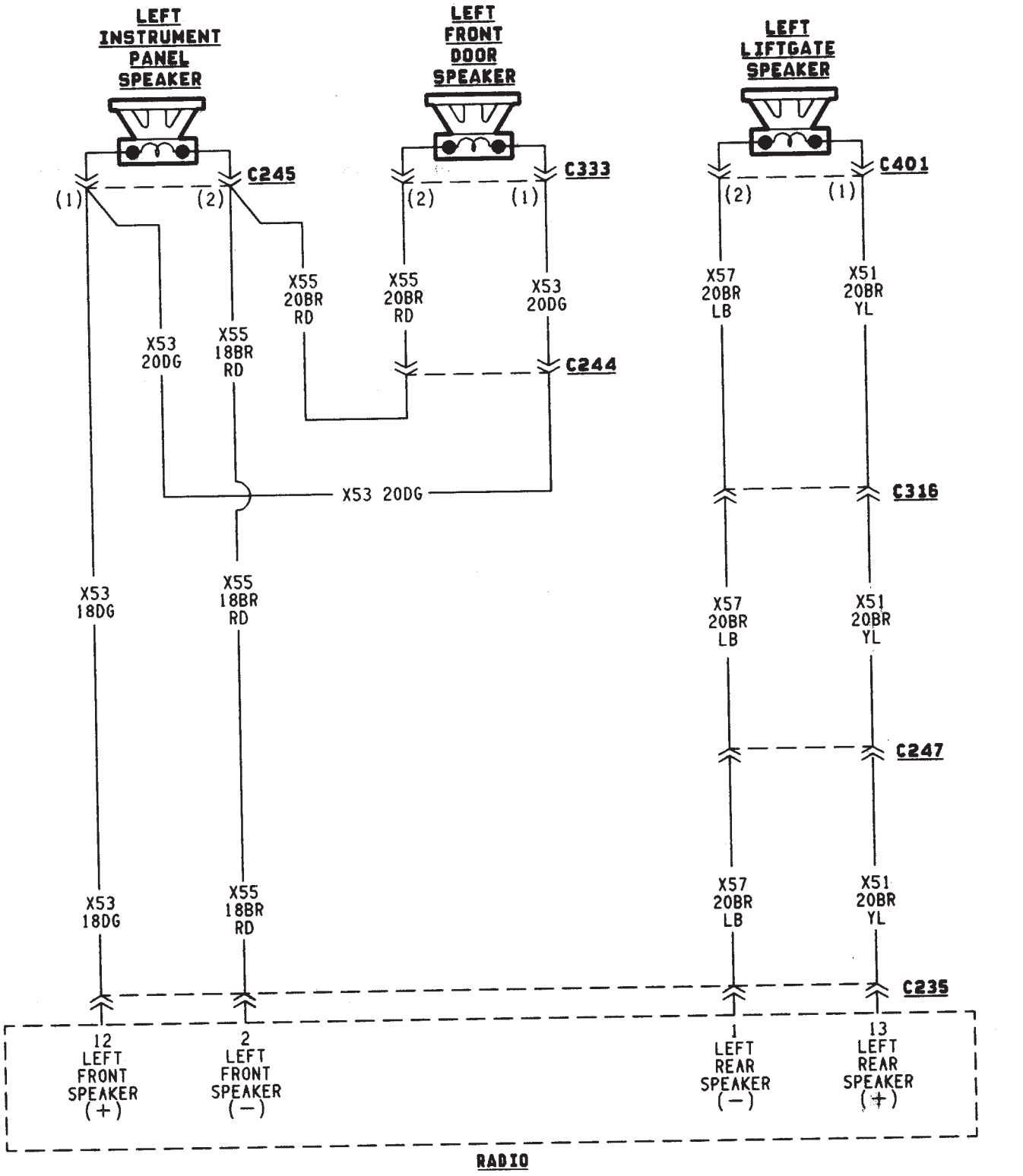
LEFT INSTRUMENT PANEL SPEAKER
LEFT FRONT DOOR SPEAKER
LEFT LIFTGATE SPEAKER
C245
C333
C401
(1)
(2)
(2)
(1)
(2)
(1)
X55 20BR RD
X55 20BR RD
X53 20DG
X57 20BR LB
X51 20BR YL
X53 20DG
X55 18BR RD
C244
X53 20DG
C316
X53 18DG
X55 18BR RD
X57 20BR LB
X51 20BR YL
C247
X53 18DG
X55 18BR RD
X57 20BR LB
X51 20BR YL
C235
12 LEFT FRONT SPEAKER (+)
2 LEFT FRONT SPEAKER (−)
1 LEFT REAR SPEAKER (−)
13 LEFT REAR SPEAKER (+)
RADIO

J958W-13

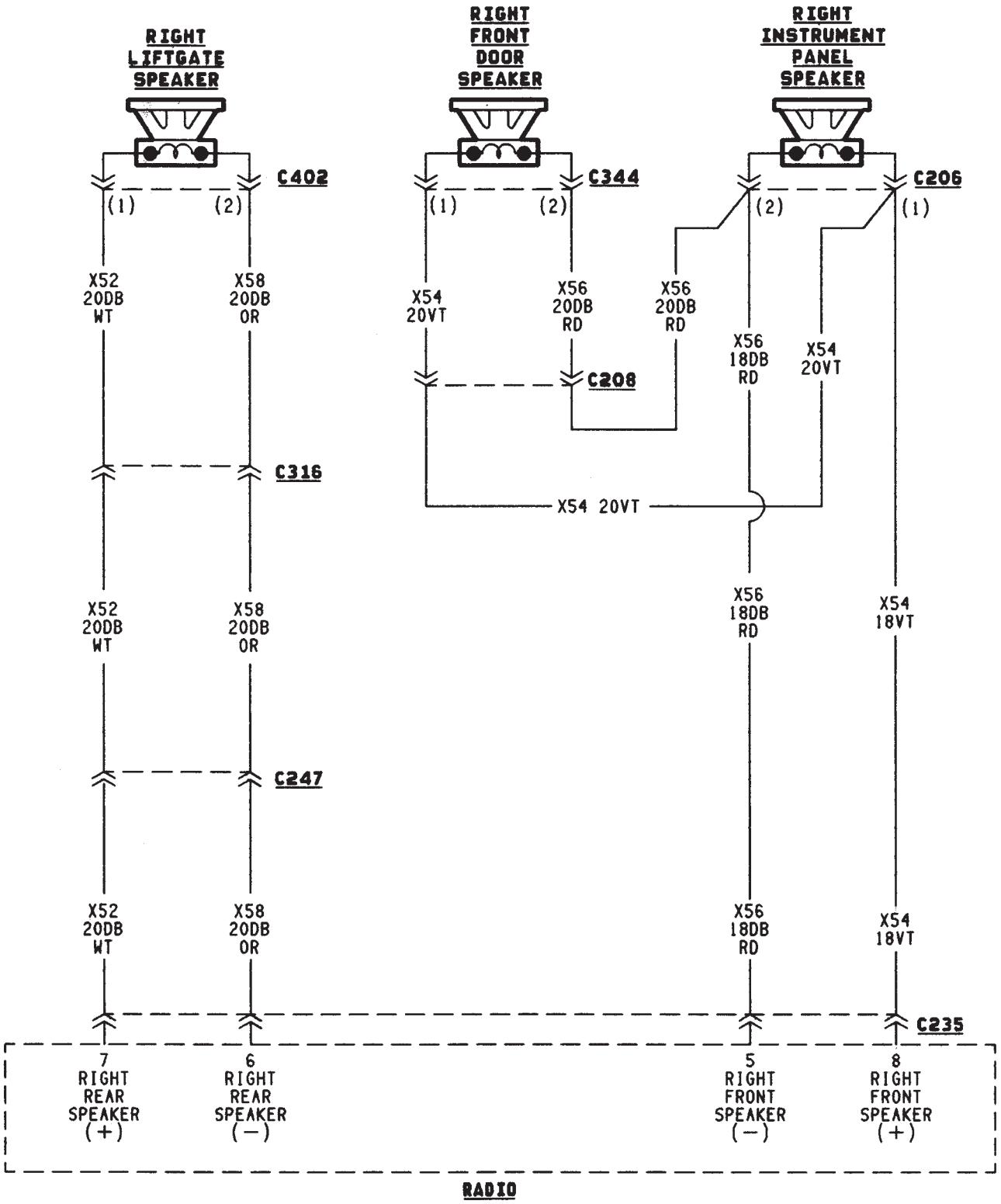
RIGHT LIFTGATE SPEAKER
RIGHT FRONT DOOR SPEAKER
RIGHT INSTRUMENT PANEL SPEAKER
C402
C344
C206
(1)
(2)
(1)
(2)
(2)
(1)
X52 20DB WT
X58 20DB OR
X54 20VT
X56 20DB RD
X56 20DB RD
X56 18DB RD
X54 20VT
C208
C316
X54 20VT
X52 20DB WT
X58 20DB OR
X56 18DB RD
X54 18VT
C247
X52 20DB WT
X58 20DB OR
X56 18DB RD
X54 18VT
C235
7 RIGHT REAR SPEAKER (+)
6 RIGHT REAR SPEAKER (−)
5 RIGHT FRONT SPEAKER (−)
8 RIGHT FRONT SPEAKER (+)
RADIO

J958W-13

HEATED REAR WINDOW

HEATED REAR WINDOW

The heated rear window relay supplies power to heated rear window grid. Circuit F83 from fuse 14 in the fuse block supplies power to the heated rear window relay when the ignition switch is in the ACCESSORY OR RUN positions.

When the operator depresses the heated rear window switch, the contacts inside the switch momentarily close and circuit C80 connects the switch to the relay. This causes the relay to change state and complete a circuit to energize the coil side of the relay and start the relay timer.

Circuit F82 from fuse 7 in the Power Distribution Center (PDC) supplies voltage to the coil and contact sides of the relay. Circuit Z1 provides ground for the relay.

When the heated rear window relay energizes, the contacts inside the relay close and connect circuit F82 to circuit C15. Circuit C15 splices to the power the heated rear window grid and the indicator lamp in the heated rear window switch. Circuit Z1 provides ground for the heated rear window grid.

HELPFUL INFORMATION

- When the ignition switch is in the ACCESSORY or RUN positions, it connects circuit A1 from fuse 11 in the power distribution center (PDC) to circuit A48.
- Check for broken grid lines on the window.
- Check for a broken bus bar or disconnected leads at the rear window.
- Check for a good ground.

DIAGRAM INDEX

Component	Page
Fuse 2 (Fuse Block)	8W-48-2
Fuse 6 (PDC)	8W-48-2
Fuse 7 (PDC)	8W-48-2
Fuse 14 (Fuse Block)	8W-48-2
Ignition Switch	8W-48-2
Heated Rear Window Grid	8W-48-3
Heated Rear Window Relay	8W-48-2
Heated Rear Window Switch	8W-48-2

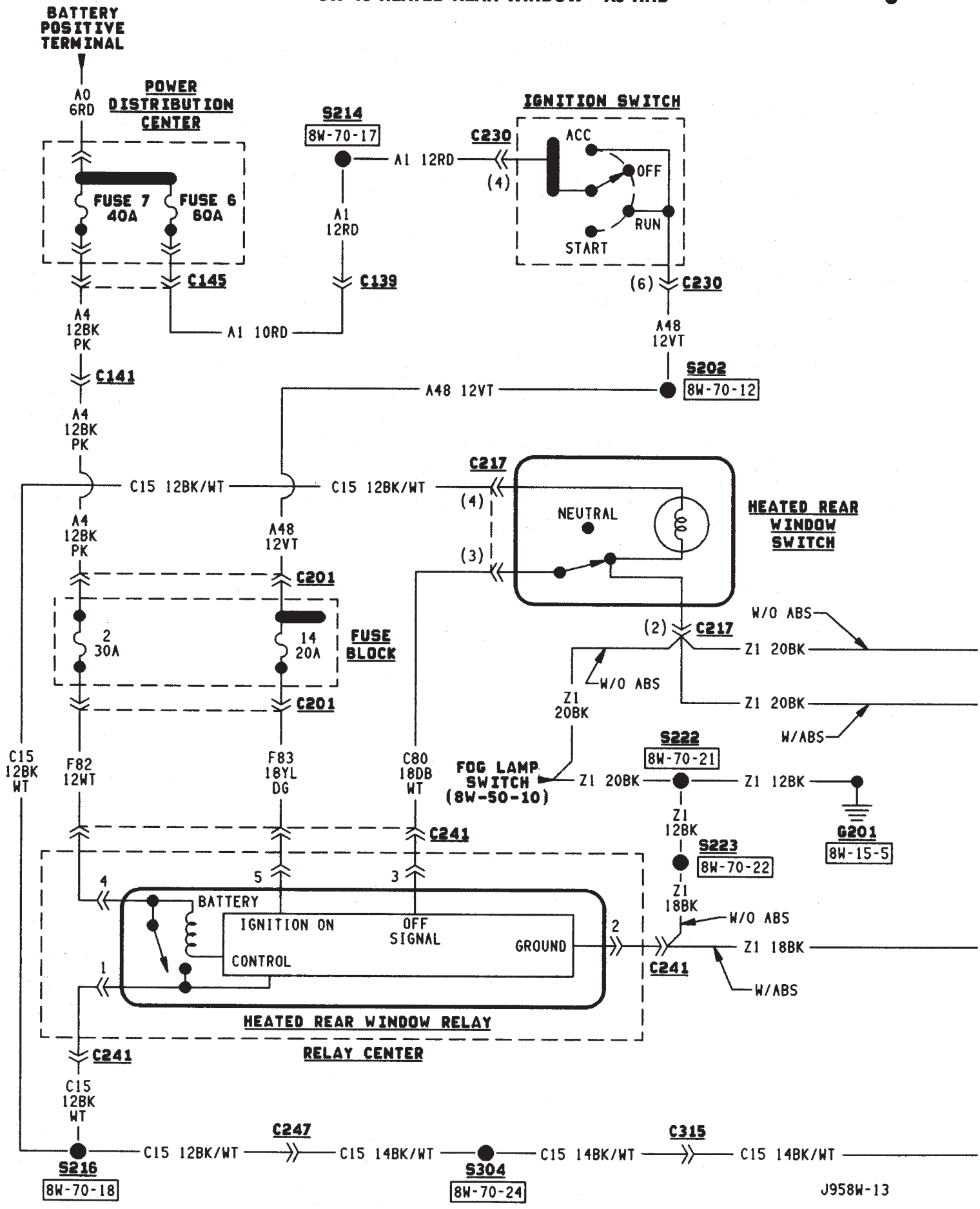
BATTERY POSITIVE TERMINAL
A0 6RD
POWER DISTRIBUTION CENTER
FUSE 7 40A
FUSE 6 60A
C145
A4 12BK PK
C141
A4 12BK PK
C15 12BK/WT
A4 12BK PK
C201
2 30A
14 20A
FUSE BLOCK
C201
C15 12BK WT
F82 12WT
F83 18YL DG
C80 18DB WT
C241
4
5
3
BATTERY
IGNITION ON
OFF SIGNAL
GROUND
CONTROL
1
2
HEATED REAR WINDOW RELAY
RELAY CENTER
C241
C15 12BK WT
S216
8W-70-18
C247
C15 12BK/WT
C15 14BK/WT
S304
8W-70-24
C315
C15 14BK/WT
C15 14BK/WT
S214
8W-70-17
A1 12RD
A1 12RD
A1 10RD
C139
C230
(4)
IGNITION SWITCH
ACC
OFF
RUN
START
(6)
C230
A48 12VT
S202
8W-70-12
A48 12VT
A48 12VT
C217
(4)
(3)
NEUTRAL
HEATED REAR WINDOW SWITCH
(2)
C217
W/O ABS
Z1 20BK
Z1 20BK
W/ABS
W/O ABS
Z1 20BK
FOG LAMP SWITCH (8W-50-10)
S222
8W-70-21
Z1 20BK
Z1 12BK
G201
8W-15-5
Z1 12BK
S223
8W-70-22
Z1 18BK
W/O ABS
Z1 18BK
C241
W/ABS
J958W-13

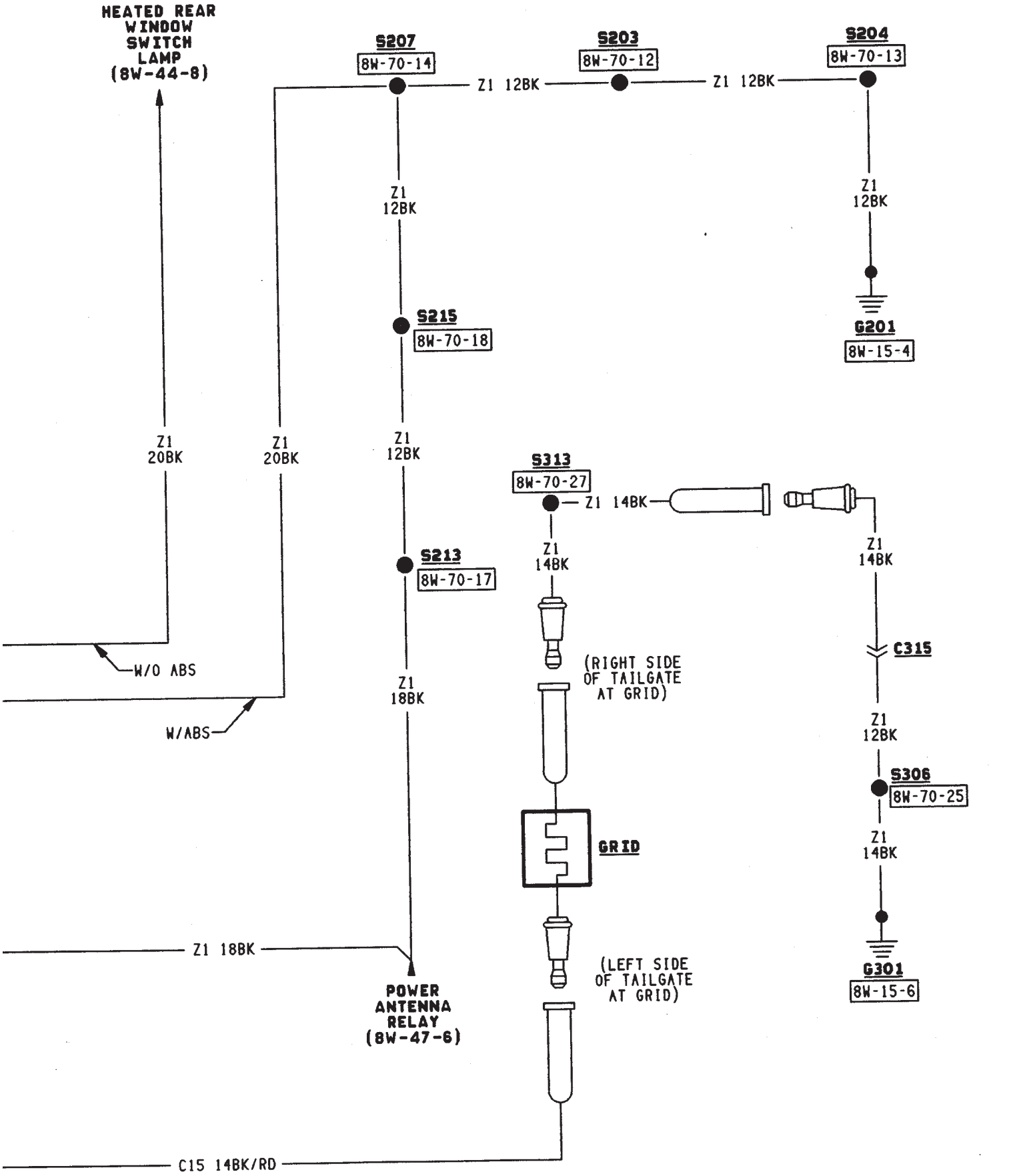
HEATED REAR WINDOW SWITCH LAMP (8W-44-8)
S207
8W-70-14
S203
8W-70-12
S204
8W-70-13
Z1 12BK
Z1 12BK
Z1 12BK
Z1 12BK
S215
8W-70-18
G201
8W-15-4
Z1 20BK
Z1 20BK
Z1 12BK
S313
8W-70-27
Z1 14BK
Z1 14BK
Z1 14BK
S213
8W-70-17
(RIGHT SIDE OF TAILGATE AT GRID)
C315
W/O ABS
W/ABS
Z1 18BK
Z1 12BK
S306
8W-70-25
GRID
Z1 14BK
Z1 18BK
(LEFT SIDE OF TAILGATE AT GRID)
G301
8W-15-6
POWER ANTENNA RELAY (8W-47-6)
C15 14BK/RD

J958W-13

OVERHEAD CONSOLE

OVERHEAD CONSOLE

When the ignition switch is in the START or RUN position, it connects circuit A1 from fuse 6 in the Power Distribution Center (PDC) to circuit A21. Circuit A21 supplies power to circuit F87 through fuse 26 in the fuse block. Circuit F87 supplies power to the overhead console.

When the headlamps or parking lamps are ON, circuits L90 and E2 provide voltage to the overhead console for illumination. Voltage on circuit L90 informs the overhead console that the headlamps or parking lamps are ON. Circuit E2 from the head lamp switch powers the illumination lamps in the overhead console. Circuit E2 also powers fuse 25 in the fuse block.

Circuits Z1 and Z2 provides ground for the overhead console. From circuit M2, the overhead console senses when one of the door jamb switches opens.

AMBIENT TEMPERATURE SENSOR

The ambient temperature sensor is a variable resistor. Circuit G31 supplies voltage from the overhead console to the sensor. Circuit G32 is the signal return from the sensor to the overhead console.

LAMPS

Circuit M1 supplies voltage for the case grounded reading lamps in the overhead console. Fuse 16 in the Power Distribution Center (PDC) supplies voltage to circuit M1 through circuit A7. Circuit A7 from fuse 3 in the PDC supplies voltage to fuse 16 in the PDC.

DIAGRAM INDEX

Component	Page
Ambient Temperature Sensor	8W-49-4
Chime/Buzzer Module	8W-49-2
Fuse 3 (PDC)	8W-49-2
Fuse 5 (PDC)	8W-49-3
Fuse 6 (PDC)	8W-49-2
Fuse 9 (Fuse Block)	8W-49-3
Fuse 16 (PDC)	8W-49-2
Fuse 26 (Fuse Block)	8W-49-2
Headlamp Delay Module	8W-49-2
Headlamp Switch	8W-49-3
Ignition Switch	8W-49-2
Instrument Cluster	8W-49-4
Overhead Console	8W-49-2, 3, 4
Telltale Connector (Instrument Cluster)	8W-49-2

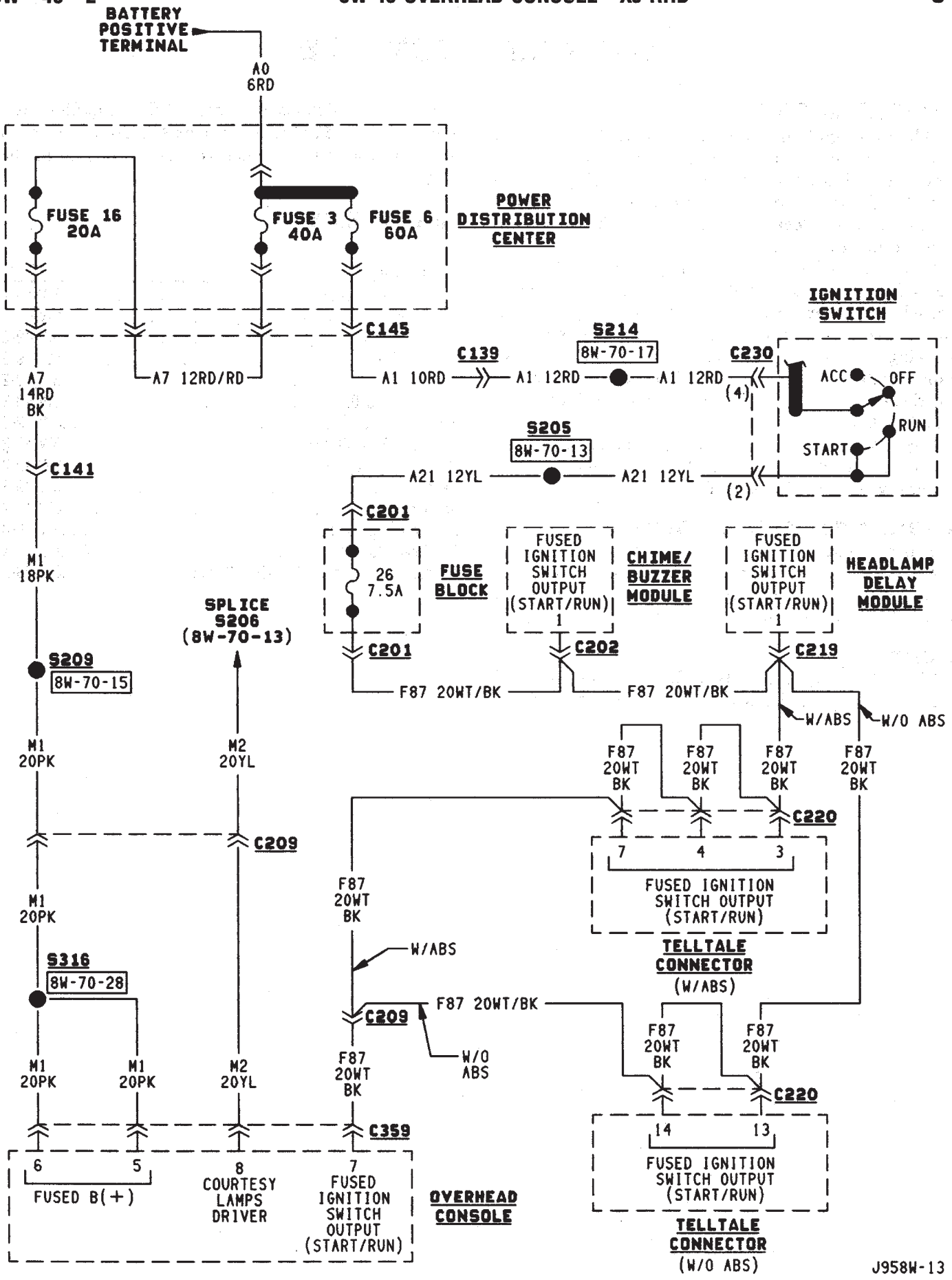
BATTERY POSITIVE TERMINAL
A0 6RD
FUSE 16 20A
FUSE 3 40A
FUSE 6 60A
POWER DISTRIBUTION CENTER
C145
A7 14RD BK
A7 12RD/RD
A1 10RD
C139
S214
8W-70-17
A1 12RD
A1 12RD
C230
(4)
IGNITION SWITCH
ACC
OFF
RUN
START
S205
8W-70-13
A21 12YL
A21 12YL
(2)
C141
C201
M1 18PK
26 7.5A
FUSE BLOCK
FUSED IGNITION SWITCH OUTPUT (START/RUN) 1
CHIME/ BUZZER MODULE
FUSED IGNITION SWITCH OUTPUT (START/RUN) 1
HEADLAMP DELAY MODULE
SPLICE S206 (8W-70-13)
S209
8W-70-15
C201
C202
C219
F87 20WT/BK
F87 20WT/BK
W/ABS
W/O ABS
M1 20PK
M2 20YL
F87 20WT BK
F87 20WT BK
F87 20WT BK
F87 20WT BK
C220
7
4
3
FUSED IGNITION SWITCH OUTPUT (START/RUN)
TELLTALE CONNECTOR (W/ABS)
C209
F87 20WT BK
W/ABS
S316
8W-70-28
F87 20WT/BK
C209
W/O ABS
M1 20PK
M1 20PK
M2 20YL
F87 20WT BK
F87 20WT BK
F87 20WT BK
C220
C359
14
13
6
5
8
7
FUSED B(+)
COURTESY LAMPS DRIVER
FUSED IGNITION SWITCH OUTPUT (START/RUN)
OVERHEAD CONSOLE
FUSED IGNITION SWITCH OUTPUT (START/RUN)
TELLTALE CONNECTOR (W/O ABS)
J958W-13

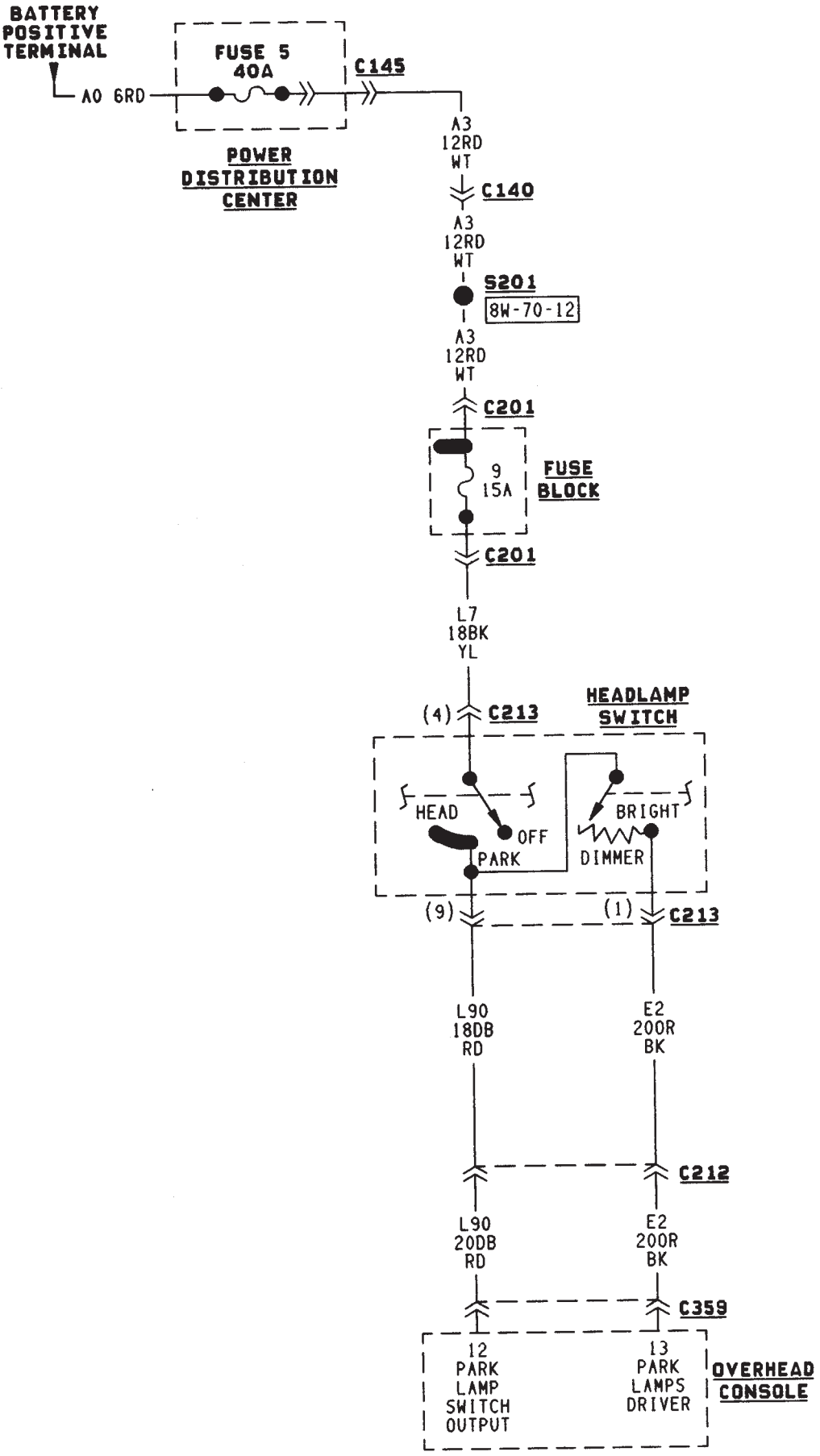
BATTERY POSITIVE TERMINAL
A0 6RD
FUSE 5 40A
C145
POWER DISTRIBUTION CENTER
A3 12RD WT
C140
A3 12RD WT
S201
8W-70-12
A3 12RD WT
C201
9 15A
FUSE BLOCK
C201
L7 18BK YL
(4) C213
HEADLAMP SWITCH
HEAD
OFF
PARK
BRIGHT
DIMMER
(9)
(1) C213
L90 18DB RD
E2 200R BK
C212
L90 20DB RD
E2 200R BK
C359
12 PARK LAMP SWITCH OUTPUT
13 PARK LAMPS DRIVER
OVERHEAD CONSOLE

J958W-13

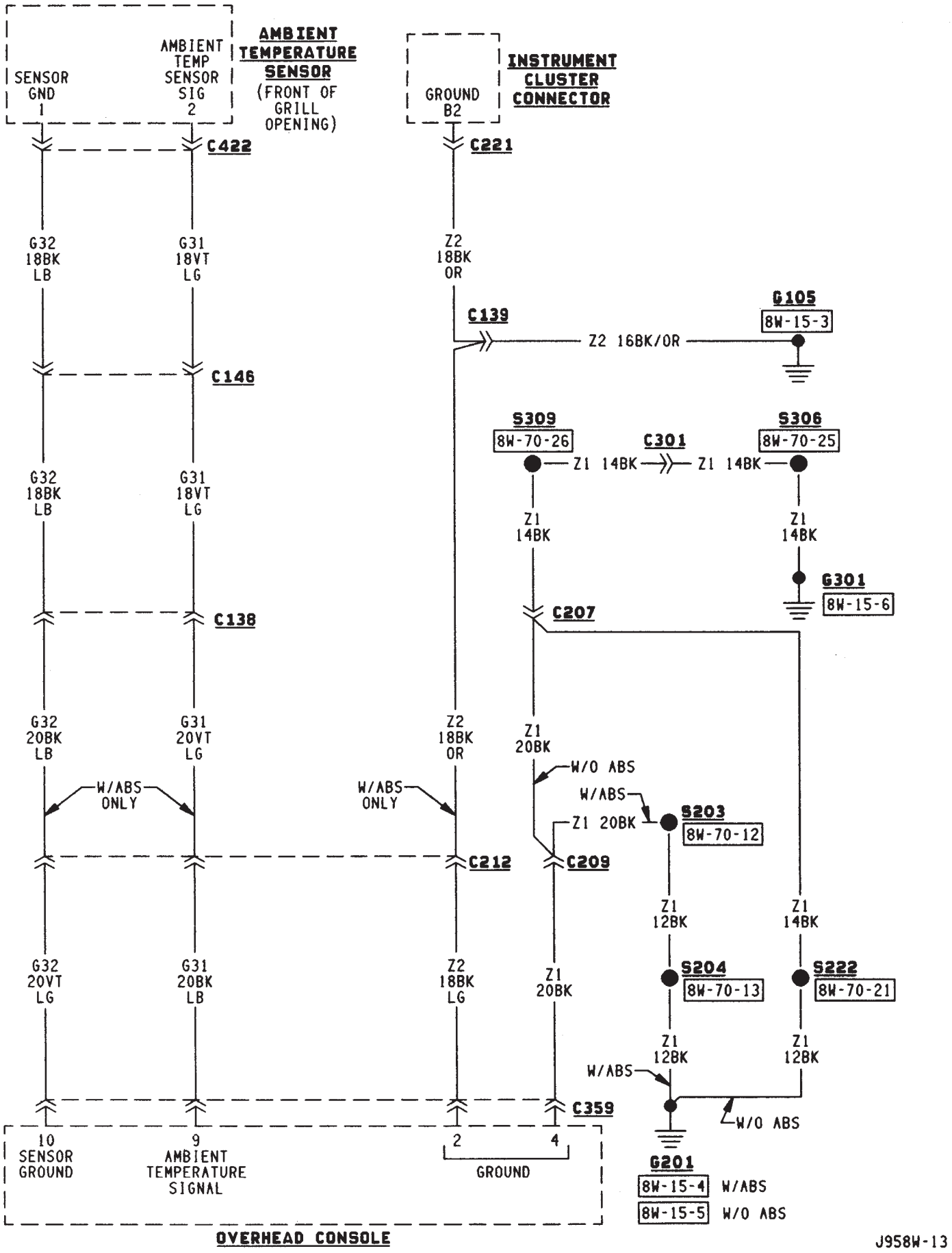
AMBIENT TEMPERATURE SENSOR
(FRONT OF GRILL OPENING)
SENSOR GND 1
AMBIENT TEMP SENSOR SIG 2
INSTRUMENT CLUSTER CONNECTOR
GROUND B2
C422
C221
G32 18BK LB
G31 18VT LG
Z2 18BK OR
C139
G105
8W-15-3
Z2 16BK/OR
C146
S309
8W-70-26
C301
S306
8W-70-25
Z1 14BK
Z1 14BK
Z1 14BK
Z1 14BK
G301
8W-15-6
C138
C207
G32 20BK LB
G31 20VT LG
Z2 18BK OR
Z1 20BK
W/O ABS
W/ABS ONLY
W/ABS ONLY
W/ABS
S203
8W-70-12
Z1 20BK
C212
C209
Z1 12BK
Z1 14BK
G32 20VT LG
G31 20BK LB
Z2 18BK LG
Z1 20BK
S204
8W-70-13
S222
8W-70-21
Z1 12BK
Z1 12BK
W/ABS
W/O ABS
C359
G201
8W-15-4 W/ABS
8W-15-5 W/O ABS
10 SENSOR GROUND
9 AMBIENT TEMPERATURE SIGNAL
2
4
GROUND
OVERHEAD CONSOLE

J958W-13

FRONT LIGHTING

INDEX

page

Diagram Index 3
Dimming Module 1
Fog Lamps 2
Headlamp Delay Module 1
Headlamp Relay 1
Headlamps 1
Parking Lamps 2

HEADLAMPS

The headlamp switch has three positions: ON, PARK (parking lamps) and OFF. Circuit A3 from fuse 12 in the PDC connects to the headlamp switch and feeds circuit L7 through fuse 9 in the fuse block. Circuit L7 connects to the headlamp switch.

Circuit A3 also splices to feed circuit L11 through fuse 10 in the fuse block. Circuit L11 connects to the dimmer switch circuitry in the multi-function switch.

The headlamp switch has an internal circuit breaker that connects circuit A3 to circuit F34. Circuit F34 connects to the headlamp relay.

HEADLAMP RELAY

When the headlamp switch is in the ON position it connects circuit A3 from fuse 5 in the Power Distribution Center (PDC) to circuit F34. Circuit A3 is HOT at all times.

Circuit F34 supplies battery voltage to the coil and contact sides of the headlamp relay. Circuit Z1 supplies ground for the relay. When voltage is present on circuit F34, the relay contacts close and connect circuit F39 to circuit F34.

Circuit F39 powers the headlamps through the dimmer switch circuitry in the multi-function switch.

HEADLAMP SWITCH IN OFF OR PARKING LAMP POSITION

Circuit L11 connects to the dimmer switch portion of the multi-function switch. Circuit L11 supplies power for the high beams on circuit L3 when the operator flashes the headlamps with the turn signal stalk of the multi-function switch.

HEADLAMP SWITCH IN ON POSITION

When the headlamp switch is in the ON position, circuit A3 from fuse 12 in the Power Distribution Center (PDC) connects to circuit F34. Circuit F34 connects to circuit F39 through the headlamp relay. Circuit F39 feeds circuit L4 through the headlamp dimmer switch circuitry in the multi-function switch. Circuit L4 powers the low beam of the headlamps.

When the operator selects high beam operation with the turn signal stalk of the multi-function switch, circuit L11 connects to the L3 circuit. Circuit L3 powers high beam operation.

HEADLAMP GROUND

Circuit Z1 provides ground for both the right and left headlamps. Circuit Z1 also supplies ground the fog lamps, if equipped.

HELPFUL INFORMATION

- Check fuse 5 in the PDC.
- The headlamp switch has an internal circuit breaker.
- Circuit L7 is double crimped at the headlamp switch and branches to the chime module.

HEADLAMP DELAY MODULE

When the operator turns off the ignition switch and the headlamp switch, the headlamp delay module powers the headlamps for approximately 45 seconds.

When the ignition switch is in the RUN position, circuit A21 powers circuit F87 through fuse 17 in the fuse block. Circuit F87 supplies the IGNITION ON/OFF signal to the headlamp delay module. Circuit Z1 provides ground for the module.

When the headlamp delay module activates, it connects circuit X4 from fuse 5 in the fuse block to circuit F34. Circuit F34 connects to the circuit F39 through the headlamp relay. Circuit F39 powers the headlamps through the headlamp dimmer switch circuit L4.

HELPFUL INFORMATION

Circuit A7 from fuse 3 in the PDC supplies voltage to the fuse block bus bar that powers circuit X4 through the fuse in cavity 5.

DIMMING MODULE

Some vehicles are equipped with a dimming module. The module is powered by the dimming relay.

In the RUN position, the ignition switch connects circuit A1 from fuse 6 in the Power Distribution Center (PDC) to circuit A38. Circuit A38 powers circuit L170 through fuse 20 in the fuse block. Circuit L170 supplies power to the dimming relay.

When the headlamps are ON, circuit L90 from the headlamp switch energizes the dimming relay. When

energized, the relay supplies power to the dimming module on a branch of circuit A38. Circuit Z1 provides ground for the dimming relay.

The dimming module connects to the headlamp dimmer switch on circuits L3 and L4.

PARKING LAMPS

Circuit A3 from fuse 5 in the Power Distribution Center (PDC) connects to a bus bar in the fuse block which feeds circuit L7. Fuse 9 in the fuse block protects circuit L7.

The headlamp switch has three positions: ON, PARK (parking lamps) and OFF, plus a dimmer switch. When the headlamp switch is in the PARK or ON position, the switch connects circuit L7 to circuit L90. From the headlamp switch, circuit L90 branches to power the front parking lamps and rear tail lamps, side marker lamps, and rear license plate lamps.

GROUND CIRCUIT

Circuit Z1 provides a ground for the parking lamps and side marker lamps. The Z1 circuit also provide ground for the headlamps.

HELPFUL INFORMATION

- Check fuse 5 in PDC.
- Check fuse 9 in the fuse block.
- When the headlamp switch is in the PARK or ON position, the dimmer circuit, L7, also connects to circuit E2. Circuit E2 continues through fuse 25 in the fuse block. Circuit E2 powers the illumination lamps.

FOG LAMPS

The fog lamps are controlled by the fog lamp switch and fog lamp relay. The fog lamps operate only when the headlamp switch is in the ON position, and the operator has selected low-beam operation. When the headlamps are in high-beam operation, the fog lamps will not operate.

Circuit F39 from fuse 13 in the Power Distribution Center (PDC) supplies voltage to the contact side of the park lamp relay.

When the fog lamp switch closes, it connects circuit F34 from the headlamp relay to L35. Circuit L35 supplies power to the coil side of the fog lamp relay and energizes the relay. Ground for the coil side of the fog lamp relay is provided on circuit Z1.

When fog lamp relay energizes, it connects circuit F39 to circuit 117. Circuit 117 supplies power to the fog lamps. Circuit Z1 provides ground for the fog lamps.

If the high beam lamps are ON, the dimmer switch does not power circuit L4 and the fog lamp relay opens. When the relay opens, battery voltage is removed from the fog lamps.

DIAGRAM INDEX

Component	Page
Chime/Buzzer Module	8W-50-6
Dimming Module	8W-50-9
Dimming Relay	8W-50-8
Fog Lamp Relay	8W-50-10
Fog Lamp Switch	8W-50-10
Fuse 5 (Fuse Block)	8W-50-7
Fuse 5 (PDC)	8W-50-4, 8
Fuse 6 (PDC)	8W-50-6, 8
Fuse 7 (PDC)	8W-50-10
Fuse 9 (Fuse Block)	8W-50-4
Fuse 10 (Fuse Block)	8W-50-7
Fuse 11 (Fuse Block)	8W-50-8
Fuse 13 (PDC)	8W-50-10
Fuse 20 (Fuse Block)	8W-50-8
Fuse 26 (Fuse Block)	8W-50-6
Headlamp Delay Module	8W-50-7
Headlamp Dimmer Switch	8W-50-4, 7
Headlamp Switch	8W-50-4, 7, 9
Headlamp Relay	8W-50-9
Ignition Switch	8W-50-6, 8
Instrument Cluster	8W-50-5
Left Fog Lamp	8W-50-10
Left Headlamp	8W-50-5
Left Marker Lamp	8W-50-5
Left Tail, Stop and Turn Signal Lamp	8W-50-5
Overhead Console	8W-50-4, 8
Right Fog Lamp	8W-50-10
Right Headlamp	8W-50-5
Right Tail, Stop and Turn Signal Lamp	8W-50-5
Telltale Connector (Instrument Cluster)	8W-50-9

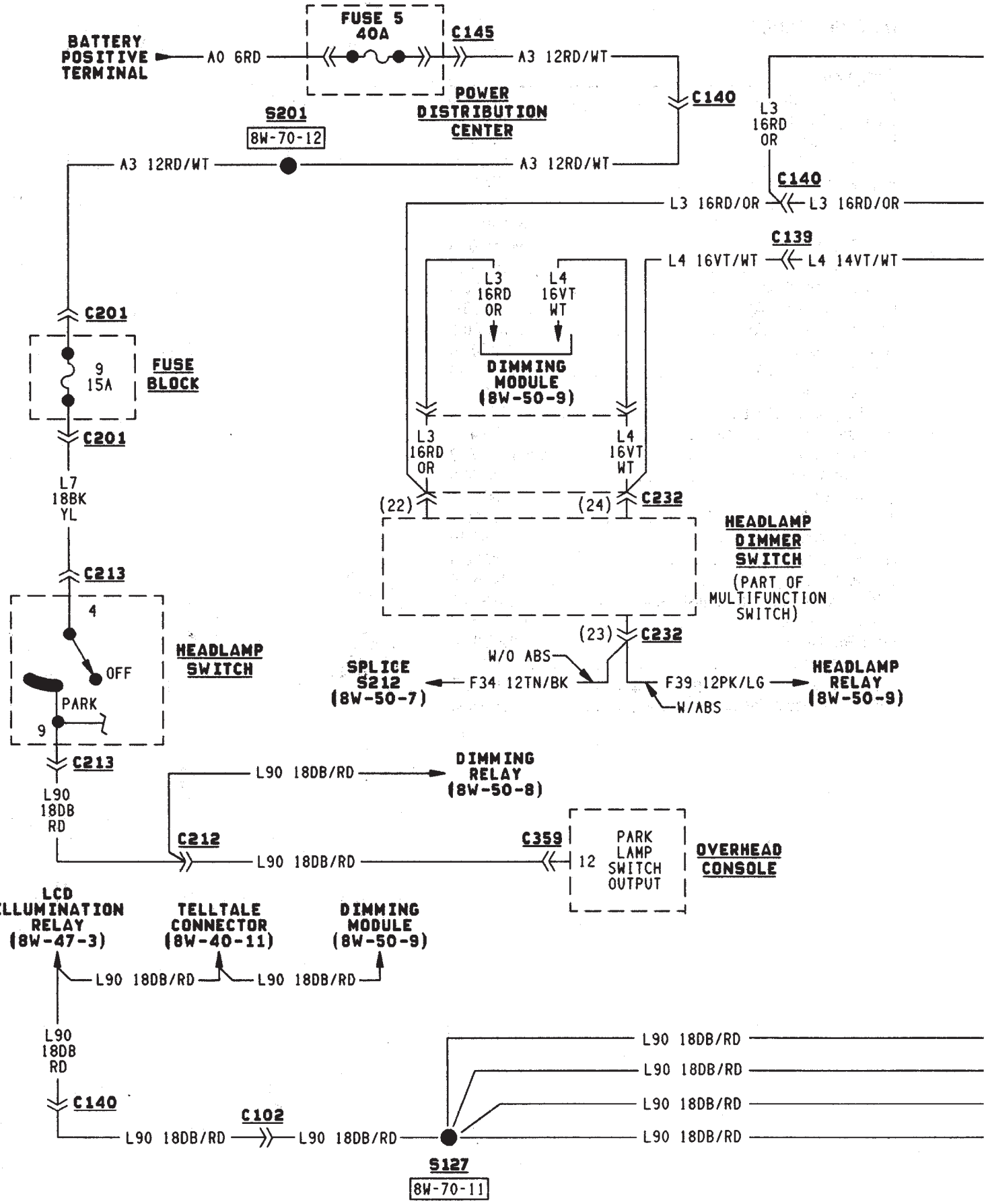
BATTERY POSITIVE TERMINAL
A0 6RD
FUSE 5 40A
C145
A3 12RD/WT
POWER DISTRIBUTION CENTER
C140
S201
8W-70-12
A3 12RD/WT
A3 12RD/WT
L3 16RD OR
C140
L3 16RD/OR
L3 16RD/OR
C139
L4 16VT/WT
L4 14VT/WT
L3 16RD OR
L4 16VT WT
DIMMING MODULE (8W-50-9)
C201
9 15A
FUSE BLOCK
C201
L7 18BK YL
L3 16RD OR
L4 16VT WT
(22)
(24)
C232
HEADLAMP DIMMER SWITCH
(PART OF MULTIFUNCTION SWITCH)
C213
4
OFF
PARK
9
HEADLAMP SWITCH
(23)
C232
W/O ABS
SPLICE S212 (8W-50-7)
F34 12TN/BK
F39 12PK/LG
HEADLAMP RELAY (8W-50-9)
W/ABS
C213
L90 18DB RD
L90 18DB/RD
DIMMING RELAY (8W-50-8)
C212
C359
12
PARK LAMP SWITCH OUTPUT
OVERHEAD CONSOLE
L90 18DB/RD
LCD ILLUMINATION RELAY (8W-47-3)
TELLTALE CONNECTOR (8W-40-11)
DIMMING MODULE (8W-50-9)
L90 18DB/RD
L90 18DB/RD
L90 18DB RD
C140
C102
L90 18DB/RD
L90 18DB/RD
L90 18DB/RD
L90 18DB/RD
L90 18DB/RD
S127
8W-70-11

J958W-13

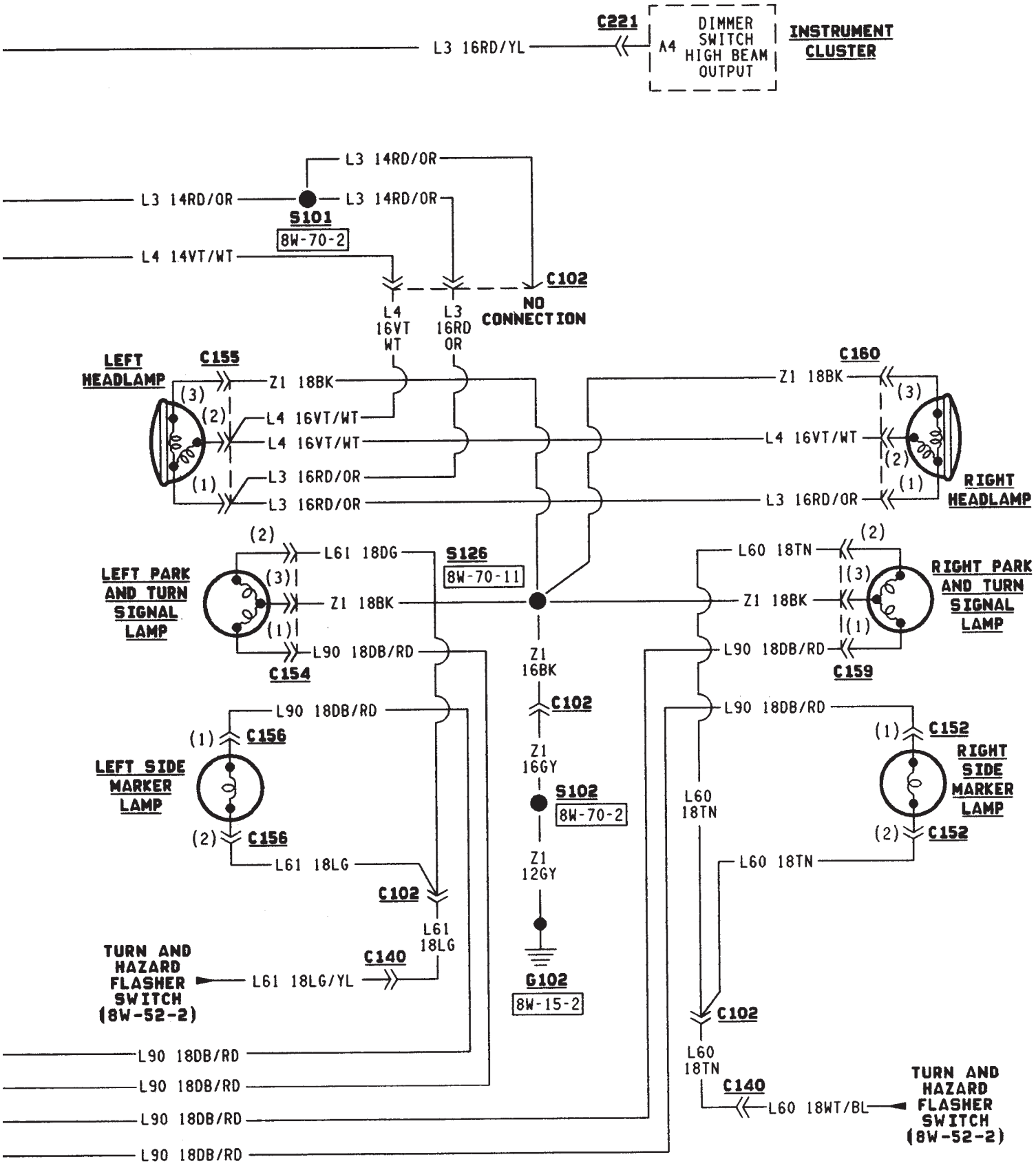
C221
A4 DIMMER SWITCH HIGH BEAM OUTPUT
INSTRUMENT CLUSTER
L3 16RD/YL
L3 14RD/OR
S101
8W-70-2
L4 14VT/WT
C102
NO CONNECTION
L4 16VT WT
L3 16RD OR
LEFT HEADLAMP
C155
Z1 18BK
L4 16VT/WT
L3 16RD/OR
C160
RIGHT HEADLAMP
LEFT PARK AND TURN SIGNAL LAMP
L61 18DG
S126
8W-70-11
L90 18DB/RD
C154
Z1 16BK
C102
Z1 16GY
S102
8W-70-2
Z1 12GY
G102
8W-15-2
L60 18TN
RIGHT PARK AND TURN SIGNAL LAMP
C159
LEFT SIDE MARKER LAMP
C156
L61 18LG
C102
L61 18LG
TURN AND HAZARD FLASHER SWITCH (8W-52-2)
C140
L61 18LG/YL
RIGHT SIDE MARKER LAMP
C152
L60 18TN
C102
L60 18TN
C140
L60 18WT/BL
TURN AND HAZARD FLASHER SWITCH (8W-52-2)

J958W-13

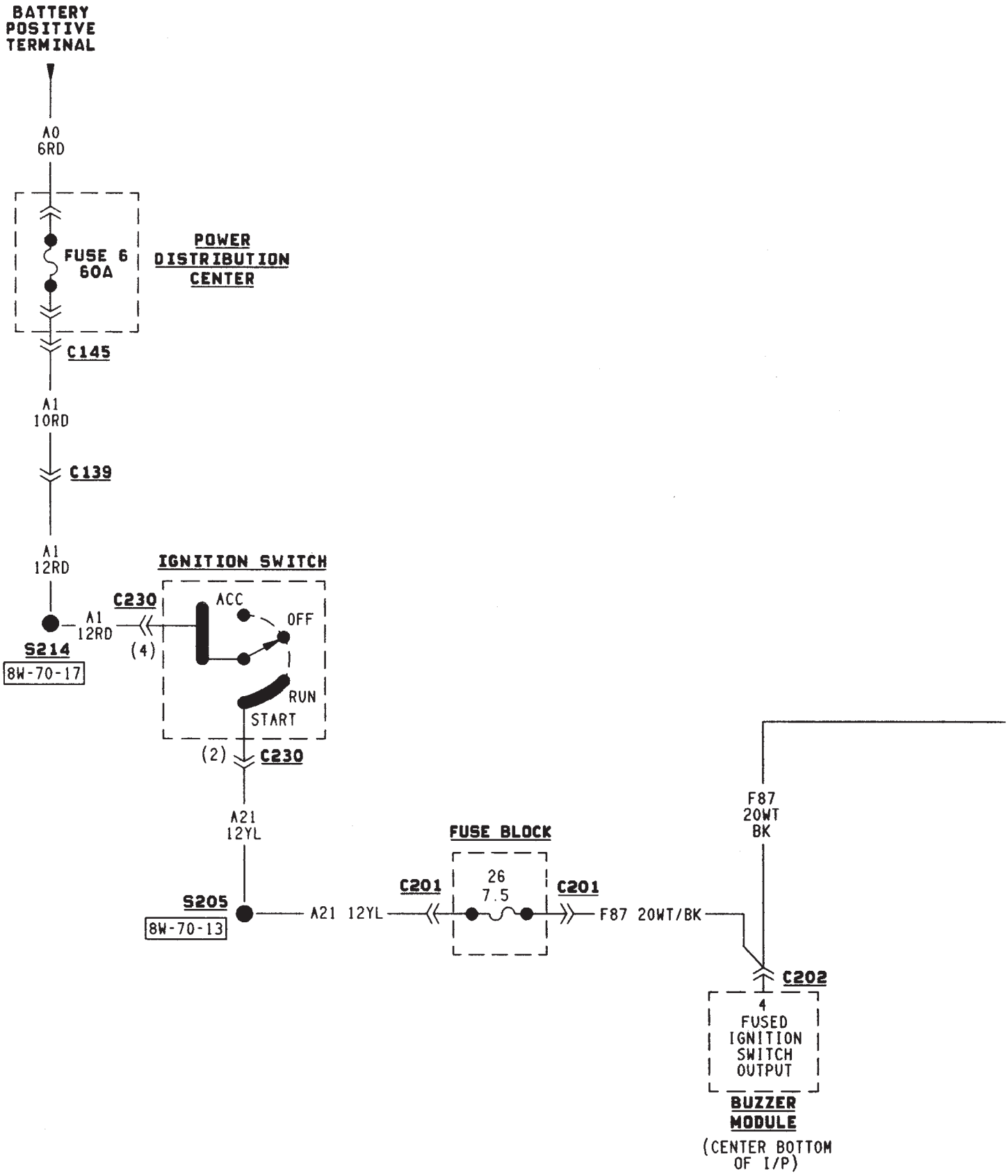
BATTERY POSITIVE TERMINAL
A0 6RD
FUSE 6 60A
POWER DISTRIBUTION CENTER
C145
A1 10RD
C139
A1 12RD
IGNITION SWITCH
C230
ACC
OFF
A1 12RD
(4)
S214
8W-70-17
RUN
START
(2)
C230
A21 12YL
S205
8W-70-13
A21 12YL
FUSE BLOCK
C201
26 7.5
C201
F87 20WT/BK
F87 20WT BK
C202
4
FUSED IGNITION SWITCH OUTPUT
BUZZER MODULE
(CENTER BOTTOM OF I/P)

J958W-7

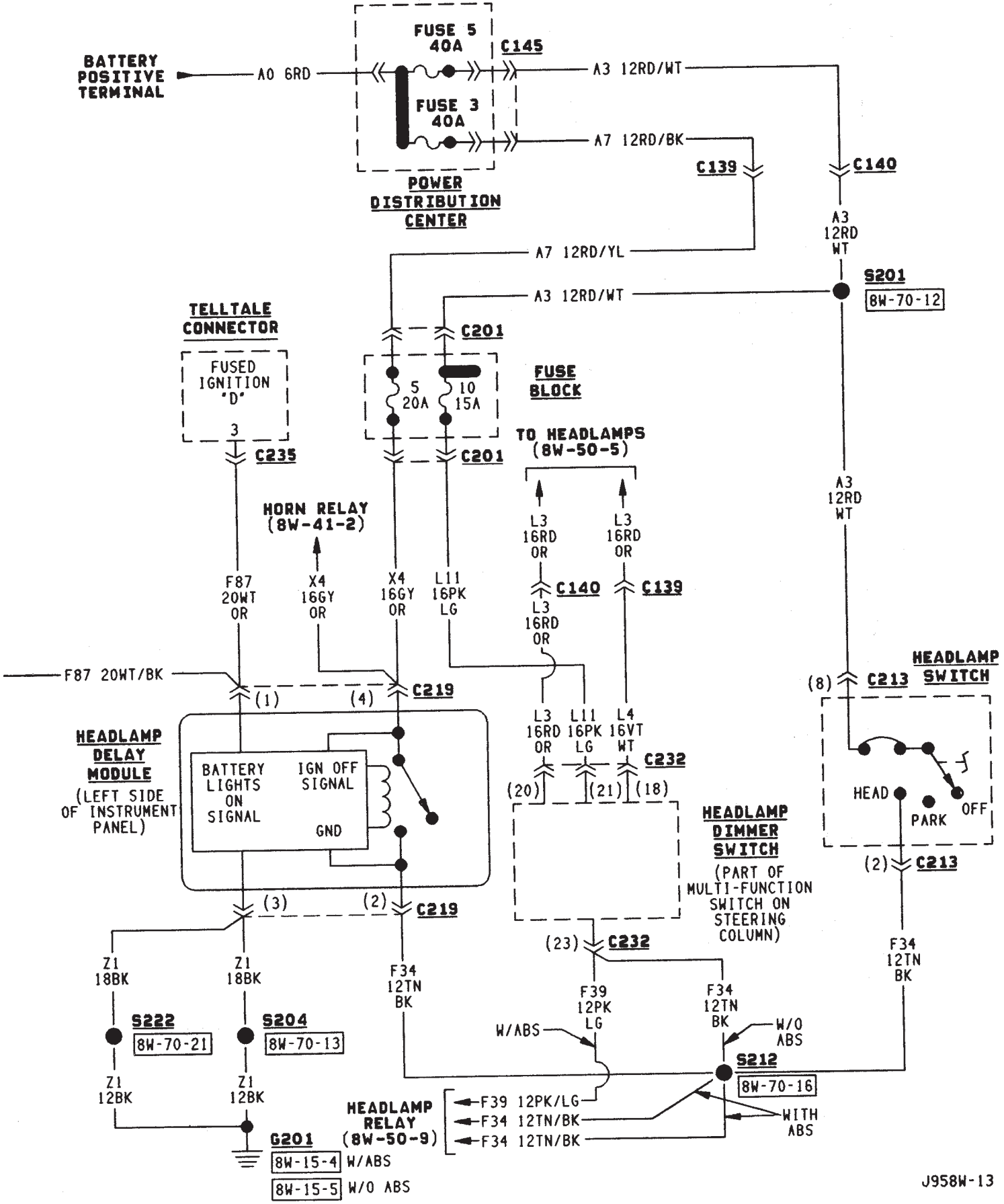
BATTERY POSITIVE TERMINAL
A0 6RD
FUSE 5 40A
FUSE 3 40A
C145
A3 12RD/WT
A7 12RD/BK
POWER DISTRIBUTION CENTER
C139
C140
A7 12RD/YL
A3 12RD WT
S201
8W-70-12
A3 12RD/WT
TELLTALE CONNECTOR
FUSED IGNITION "D"
3
C235
C201
5 20A
10 15A
FUSE BLOCK
TO HEADLAMPS (8W-50-5)
HORN RELAY (8W-41-2)
L3 16RD OR
F87 20WT OR
X4 16GY OR
X4 16GY OR
L11 16PK LG
C140
C139
L3 16RD OR
F87 20WT/BK
(1)
(4)
C219
HEADLAMP SWITCH
(8)
C213
HEADLAMP DELAY MODULE
(LEFT SIDE OF INSTRUMENT PANEL)
BATTERY LIGHTS ON SIGNAL
IGN OFF SIGNAL
GND
L3 16RD OR
L11 16PK LG
L4 16VT WT
C232
(20)
(21)
(18)
HEAD
PARK
OFF
(2)
C213
HEADLAMP DIMMER SWITCH
(PART OF MULTI-FUNCTION SWITCH ON STEERING COLUMN)
(3)
(2)
C219
(23)
C232
Z1 18BK
Z1 18BK
F34 12TN BK
F39 12PK LG
F34 12TN BK
F34 12TN BK
W/ABS
W/O ABS
S222
8W-70-21
S204
8W-70-13
S212
8W-70-16
Z1 12BK
Z1 12BK
HEADLAMP RELAY (8W-50-9)
F39 12PK/LG
F34 12TN/BK
F34 12TN/BK
WITH ABS
G201
8W-15-4 W/ABS
8W-15-5 W/O ABS
J958W-13

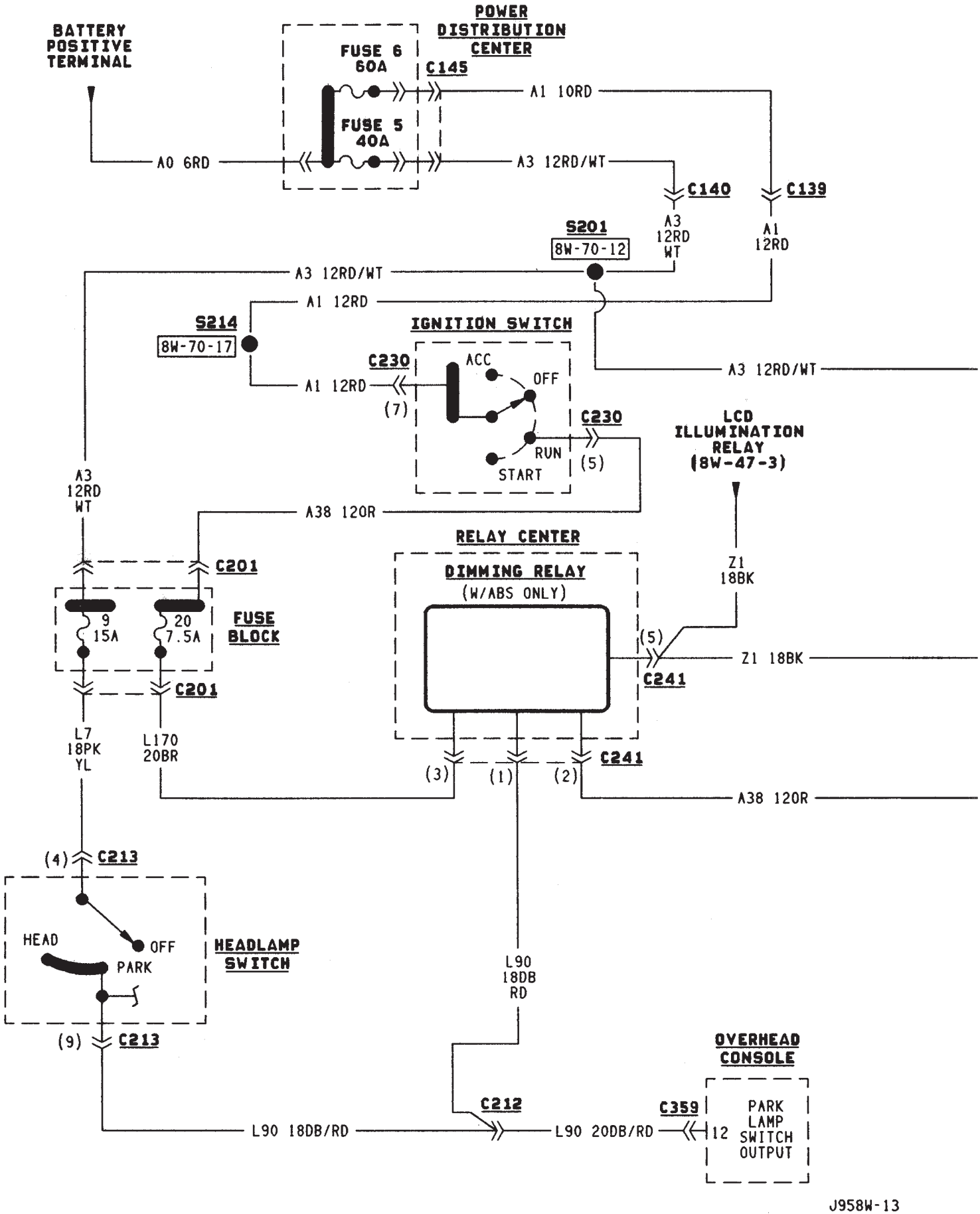
BATTERY POSITIVE TERMINAL
POWER DISTRIBUTION CENTER
FUSE 6 60A
FUSE 5 40A
C145
A0 6RD
A1 10RD
A3 12RD/WT
C140
C139
A3 12RD WT
A1 12RD
S201
8W-70-12
A3 12RD/WT
A1 12RD
S214
8W-70-17
IGNITION SWITCH
C230
ACC
OFF
RUN
START
(7)
(5)
A3 12RD/WT
LCD ILLUMINATION RELAY (8W-47-3)
A3 12RD WT
A38 12OR
C201
FUSE BLOCK
9 15A
20 7.5A
RELAY CENTER
DIMMING RELAY
(W/ABS ONLY)
Z1 18BK
(5)
Z1 18BK
C241
L7 18PK YL
L170 20BR
(3)
(1)
(2)
C241
A38 12OR
(4)
C213
HEAD
OFF
PARK
HEADLAMP SWITCH
L90 18DB RD
(9)
C213
OVERHEAD CONSOLE
C212
C359
12
PARK LAMP SWITCH OUTPUT
L90 18DB/RD
L90 20DB/RD
J958W-13

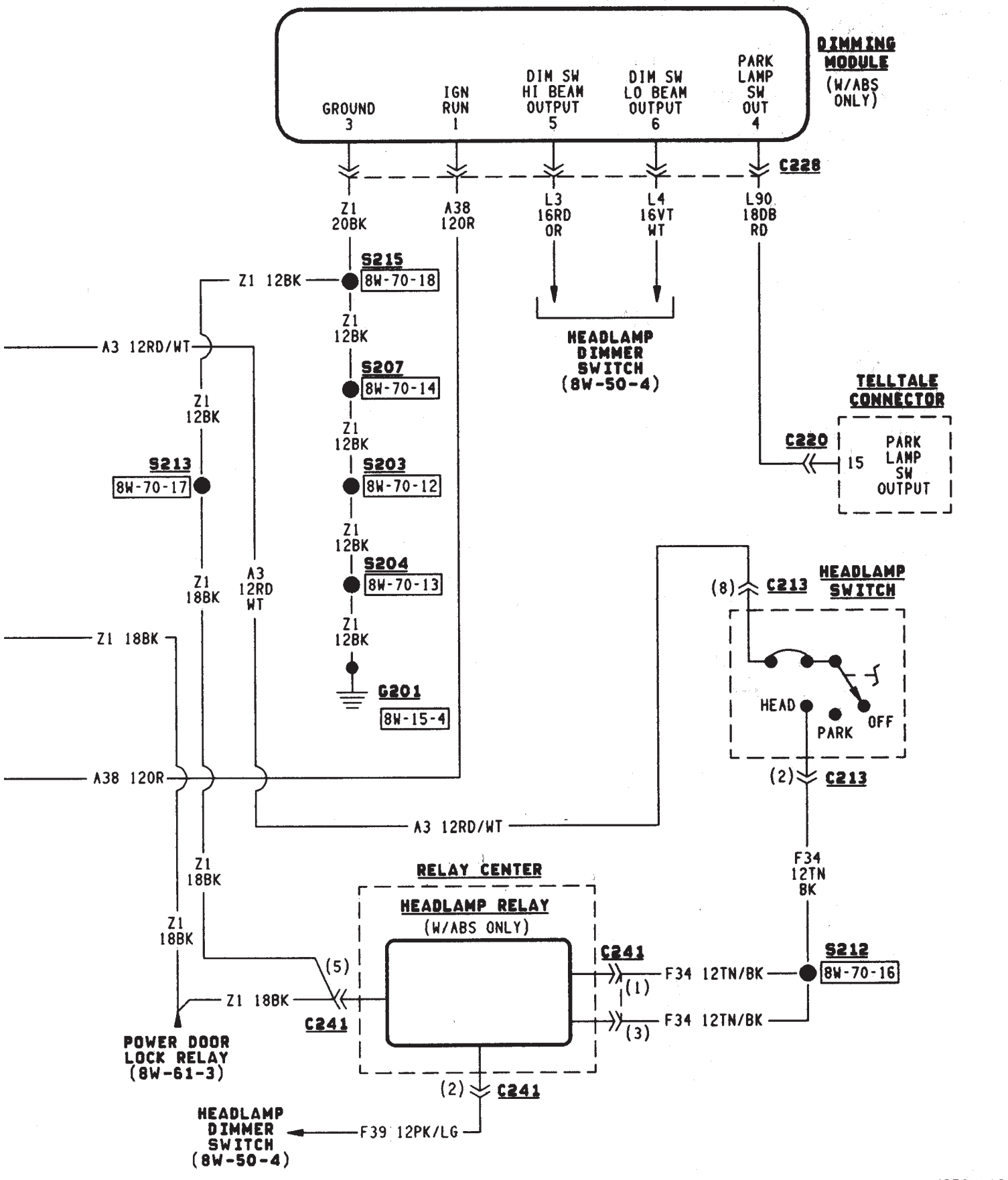
DIMMING MODULE
(W/ABS ONLY)
GROUND 3
IGN RUN 1
DIM SW HI BEAM OUTPUT 5
DIM SW LO BEAM OUTPUT 6
PARK LAMP SW OUT 4
C228
Z1 20BK
A38 120R
L3 16RD OR
L4 16VT WT
L90 18DB RD
S215
8W-70-18
Z1 12BK
HEADLAMP DIMMER SWITCH (8W-50-4)
TELLTALE CONNECTOR
C220
15 PARK LAMP SW OUTPUT
A3 12RD/WT
S207
8W-70-14
S213
8W-70-17
S203
8W-70-12
S204
8W-70-13
G201
8W-15-4
Z1 18BK
A3 12RD WT
(8) C213
HEADLAMP SWITCH
HEAD
PARK
OFF
(2) C213
A38 120R
A3 12RD/WT
F34 12TN BK
RELAY CENTER
HEADLAMP RELAY
(W/ABS ONLY)
C241
(5)
(1)
(3)
F34 12TN/BK
S212
8W-70-16
POWER DOOR LOCK RELAY (8W-61-3)
(2) C241
HEADLAMP DIMMER SWITCH (8W-50-4)
F39 12PK/LG

J958W-13

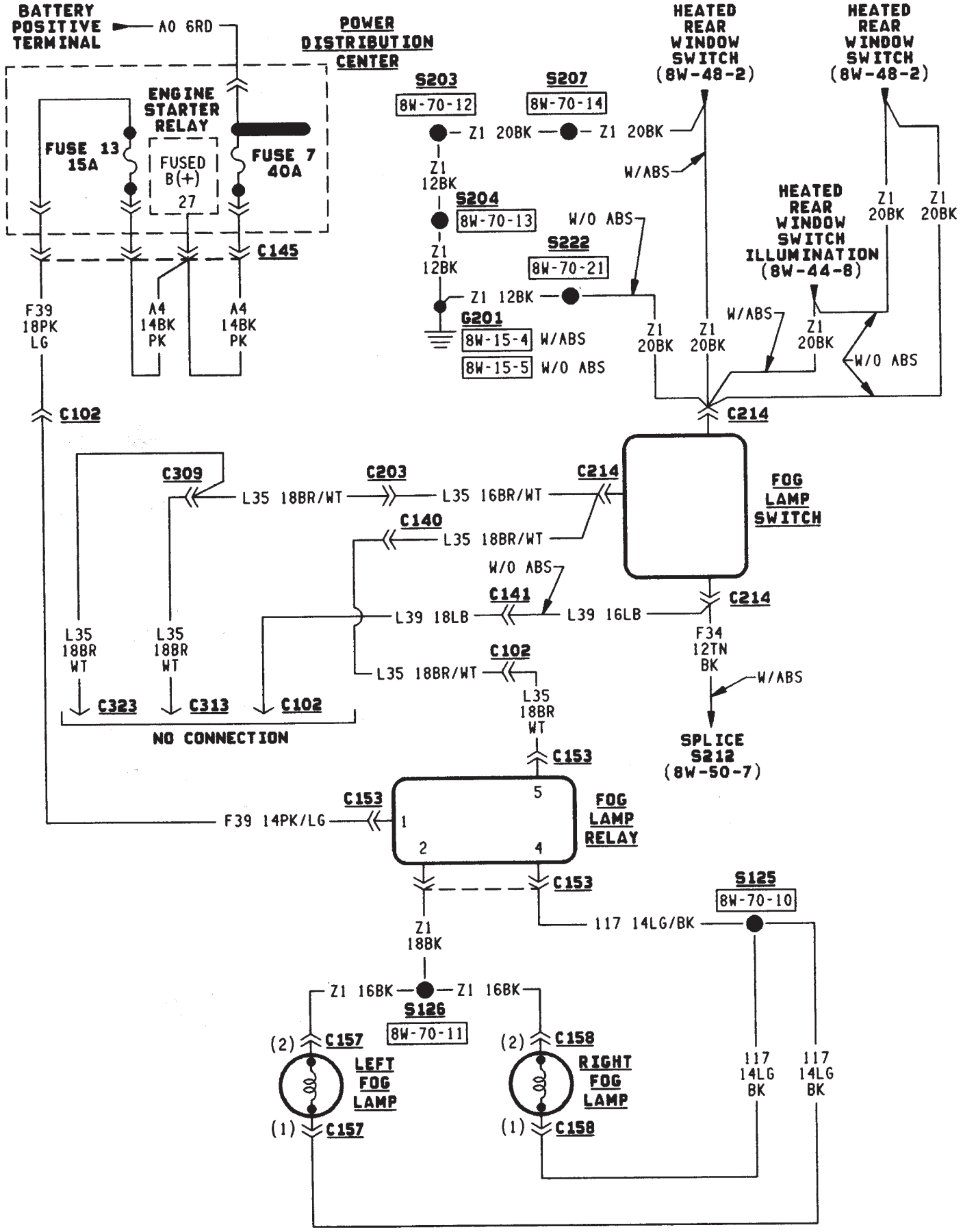
BATTERY POSITIVE TERMINAL
A0 6RD
POWER DISTRIBUTION CENTER
ENGINE STARTER RELAY
FUSE 13 15A
FUSED B(+) 27
FUSE 7 40A
C145
F39 18PK LG
A4 14BK PK
A4 14BK PK
C102
S203
8W-70-12
S207
8W-70-14
HEATED REAR WINDOW SWITCH (8W-48-2)
HEATED REAR WINDOW SWITCH (8W-48-2)
Z1 20BK
Z1 20BK
W/ABS
Z1 12BK
S204
8W-70-13
W/O ABS
S222
8W-70-21
Z1 12BK
G201
8W-15-4 W/ABS
8W-15-5 W/O ABS
HEATED REAR WINDOW SWITCH ILLUMINATION (8W-44-8)
Z1 20BK
Z1 20BK
Z1 20BK
Z1 20BK
Z1 20BK
W/ABS
W/O ABS
C214
C309
C203
C214
L35 18BR/WT
L35 16BR/WT
FOG LAMP SWITCH
C140
L35 18BR/WT
W/O ABS
C141
L39 18LB
L39 16LB
C214
L35 18BR WT
L35 18BR WT
F34 12TN BK
W/ABS
C102
L35 18BR/WT
L35 18BR WT
C323
C313
C102
NO CONNECTION
SPLICE S212 (8W-50-7)
C153
5
C153
F39 14PK/LG
1
FOG LAMP RELAY
2
4
C153
S125
8W-70-10
117 14LG/BK
Z1 18BK
Z1 16BK
Z1 16BK
S126
8W-70-11
(2) C157
(2) C158
LEFT FOG LAMP
RIGHT FOG LAMP
117 14LG BK
117 14LG BK
(1) C157
(1) C158

J958W-13

REAR LIGHTING

TAIL LAMPS AND REAR LICENSE PLATE LAMPS

Circuit A3 from fuse 5 in the Power Distribution Center (PDC) connects to a bus bar in the fuse block which feeds circuit L7. Fuse 9 in the fuse block protects circuit L7.

The headlamp switch has three positions: ON, PARK (parking lamps) and OFF, plus a dimmer switch. When the headlamp switch is in the PARK or ON position, the switch connects circuit L7 to circuit L90. From the headlamp switch, circuit L90 branches to power the front parking lamps and rear tail lamps, side marker lamps, and rear license plate lamps.

GROUND CIRCUIT

Circuit Z1 provides a ground for the parking lamps, tail lamps, and rear license plate lamps.

HELPFUL INFORMATION

- Check fuse 5 in PDC.
- Check fuse 9 in the fuse block.
- When the headlamp switch is in the PARK or ON position, circuit L7 also connects to circuit E2. Circuit E2 continues through fuse 25 in the fuse block. Circuit E2 powers the illumination lamps.

STOP LAMPS AND CHMSL LAMPS

Circuit L9 from fuse 4 in the Power Distribution Center (PDC) connects to the stop lamp switch. When the operator depresses the brake pedal, the stop lamp switch closes and connects circuit L9 to circuit L50. Circuit L50 connects to the stop lamps and center high mounted stop lamps (CHMSL). Circuit Z1 provides a ground for the stop lamps.

HELPFUL INFORMATION

- Check fuses 13 in the PDC.
- Check for continuity across the stop lamp switch when it is closed.

BACK-UP LAMPS

In the START or RUN position, the ignition switch connects circuit A1 from fuse 6 in the Power Distribution Center (PDC) to circuit A21. Circuit A21 feeds a bus bar in the PDC that powers circuit F12 through fuse 11.

Circuit F12 supplies power to the back-up lamp switch. On automatic transmission equipped vehicles, the back-up lamp switch is part of an assembly that includes the PARK/NEUTRAL position switch. When the operator puts the transmission in REVERSE, the back-up lamp switch connects circuit F12 to circuit L10. Circuit L10 feeds the back-up lamps. Circuit Z1 provides ground for the back-up lamps.

HELPFUL INFORMATION

- Check fuses 6 and 11 in the PDC.
- Check for continuity across the back-up lamp switch when it is closed.

DIAGRAM INDEX

Component	Page
Center High Mounted Stop Lamps (CHMSL)	8W-51-3
Fuse 4 (PDC)	8W-51-3
Fuse 5 (PDC)	8W-51-2
Fuse 6 (Fuse Block)	8W-51-2
Fuse 6 (PDC)	8W-51-2
Fuse 9 (Fuse Block)	8W-51-2
Headlamp Switch	8W-51-2
Ignition Switch	8W-51-2
Left Back-Up Lamp	8W-51-4
Left Side Marker Lamp	8W-51-4
Left Tail/Stop Lamp	8W-51-4
Left Turn Signal Lamp	8W-51-4
License Plate Lamp	8W-51-3
Park/Neutral Position Switch	8W-51-2
Right Back-Up Lamp	8W-51-5
Right Side Marker Lamp	8W-51-5
Right Tail/Stop Lamp	8W-51-4
Right Turn Signal Lamp	8W-51-5
Stop Lamp Switch	8W-51-3

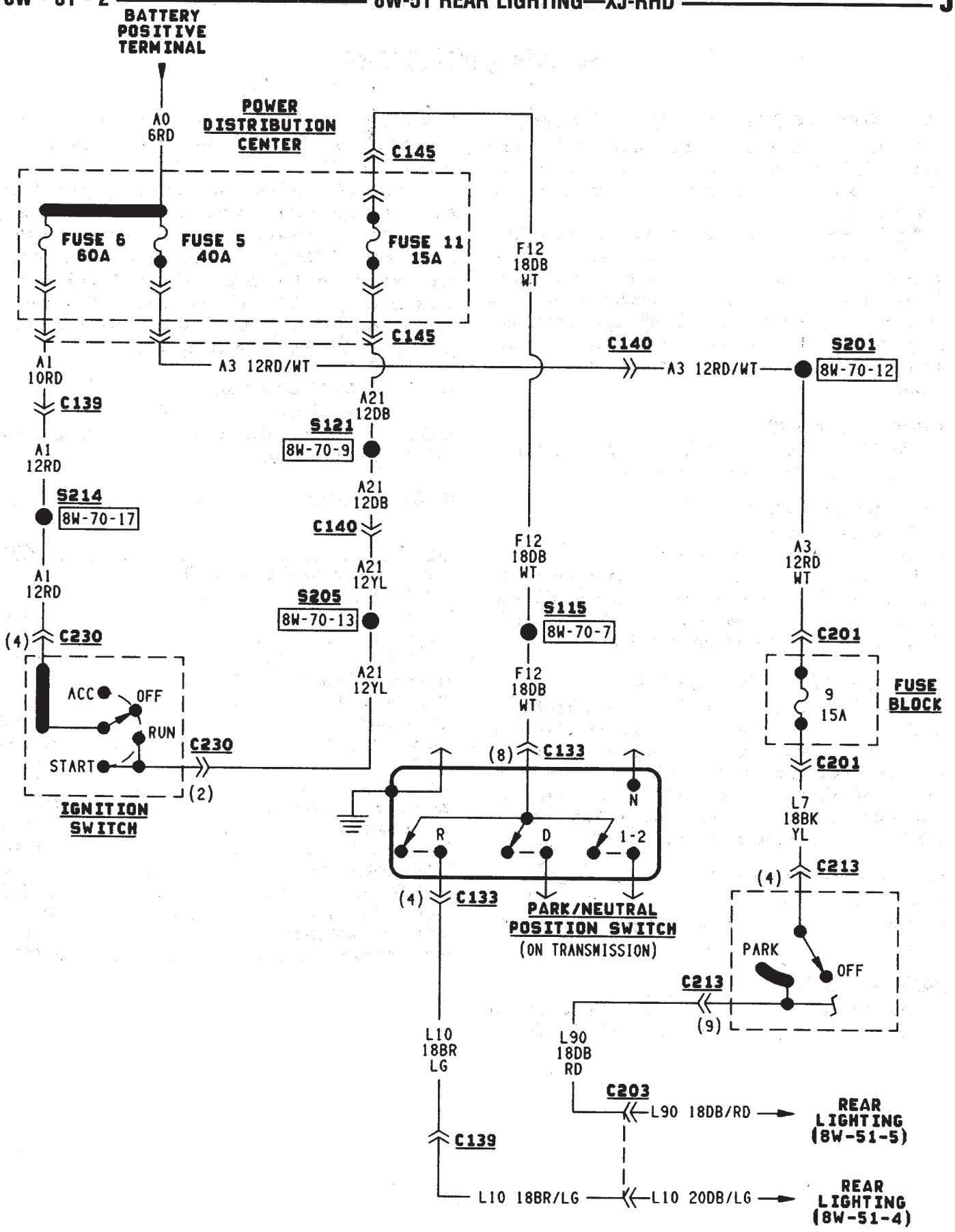
BATTERY POSITIVE TERMINAL
A0 6RD
POWER DISTRIBUTION CENTER
C145
FUSE 6 60A
FUSE 5 40A
FUSE 11 15A
F12 18DB WT
C145
C140
S201
8W-70-12
A1 10RD
A3 12RD/WT
A3 12RD/WT
C139
A21 12DB
S121
8W-70-9
A1 12RD
A21 12DB
S214
8W-70-17
C140
A1 12RD
A21 12YL
S205
8W-70-13
F12 18DB WT
S115
8W-70-7
A3 12RD WT
C201
(4) C230
A21 12YL
F12 18DB WT
9 15A
FUSE BLOCK
ACC
OFF
RUN
START
C230
(2)
IGNITION SWITCH
(8) C133
N
R
D
1-2
C201
L7 18BK YL
(4) C133
PARK/NEUTRAL POSITION SWITCH
(ON TRANSMISSION)
(4) C213
PARK
OFF
C213
(9)
L10 18BR LG
L90 18DB RD
C203
L90 18DB/RD
REAR LIGHTING (8W-51-5)
C139
L10 18BR/LG
L10 20DB/LG
REAR LIGHTING (8W-51-4)

J958W-13

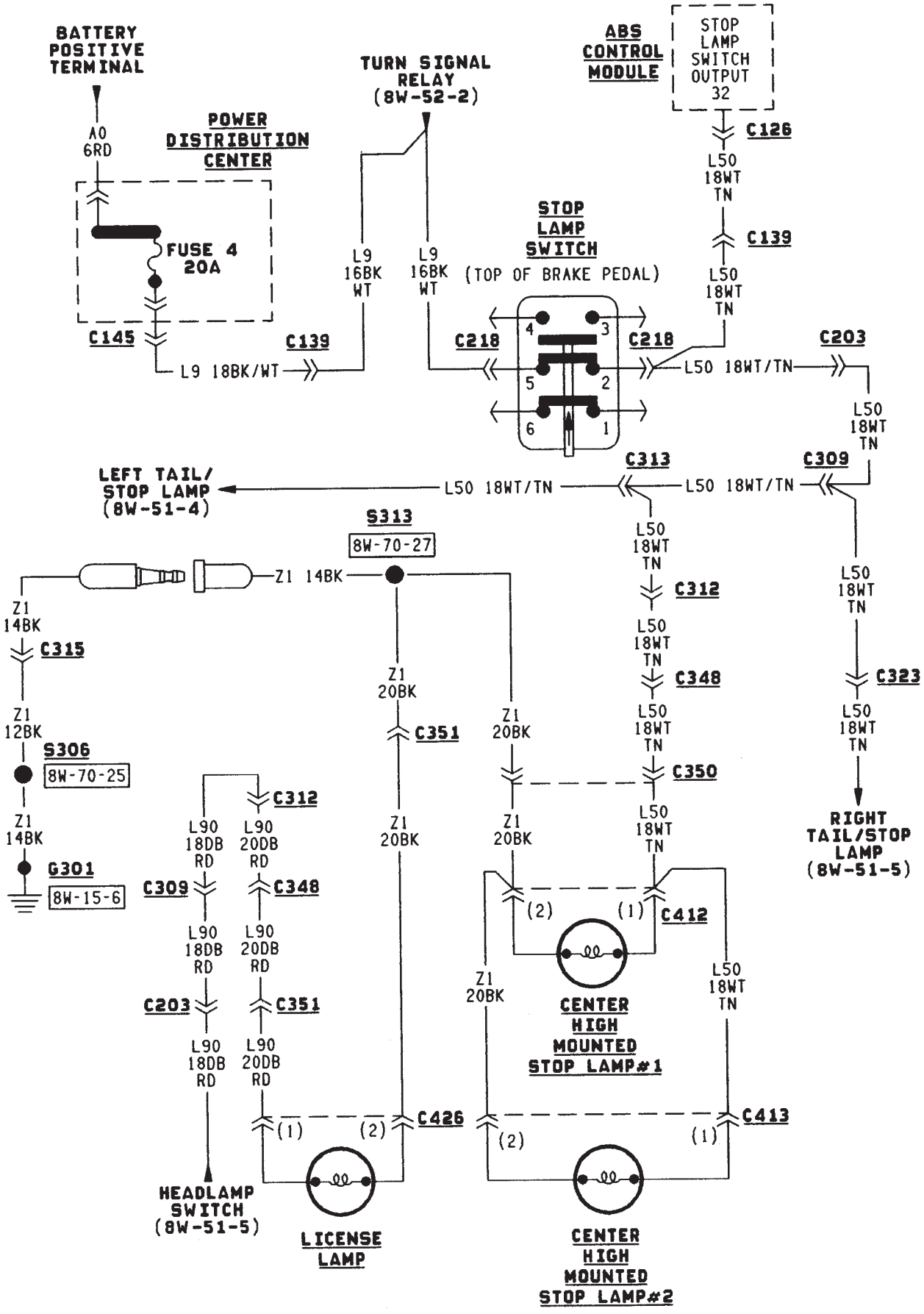
BATTERY POSITIVE TERMINAL
A0 6RD
POWER DISTRIBUTION CENTER
FUSE 4 20A
C145
L9 18BK/WT
C139
L9 16BK WT
L9 16BK WT
TURN SIGNAL RELAY (8W-52-2)
ABS CONTROL MODULE
STOP LAMP SWITCH OUTPUT 32
C126
L50 18WT TN
C139
L50 18WT TN
STOP LAMP SWITCH (TOP OF BRAKE PEDAL)
C218
C218
4
3
5
2
6
1
L50 18WT/TN
C203
L50 18WT TN
C313
C309
LEFT TAIL/ STOP LAMP (8W-51-4)
L50 18WT/TN
L50 18WT/TN
S313
8W-70-27
Z1 14BK
L50 18WT TN
C312
L50 18WT TN
C348
L50 18WT TN
C323
L50 18WT TN
RIGHT TAIL/STOP LAMP (8W-51-5)
Z1 14BK
C315
Z1 12BK
S306
8W-70-25
Z1 14BK
G301
8W-15-6
Z1 20BK
C351
Z1 20BK
C350
L50 18WT TN
C312
L90 18DB RD
L90 20DB RD
C309
C348
L90 18DB RD
L90 20DB RD
C203
C351
L90 18DB RD
L90 20DB RD
Z1 20BK
Z1 20BK
(2)
(1)
C412
CENTER HIGH MOUNTED STOP LAMP#1
Z1 20BK
L50 18WT TN
(1)
(2)
C426
(2)
(1)
C413
HEADLAMP SWITCH (8W-51-5)
LICENSE LAMP
CENTER HIGH MOUNTED STOP LAMP#2

J958W-13

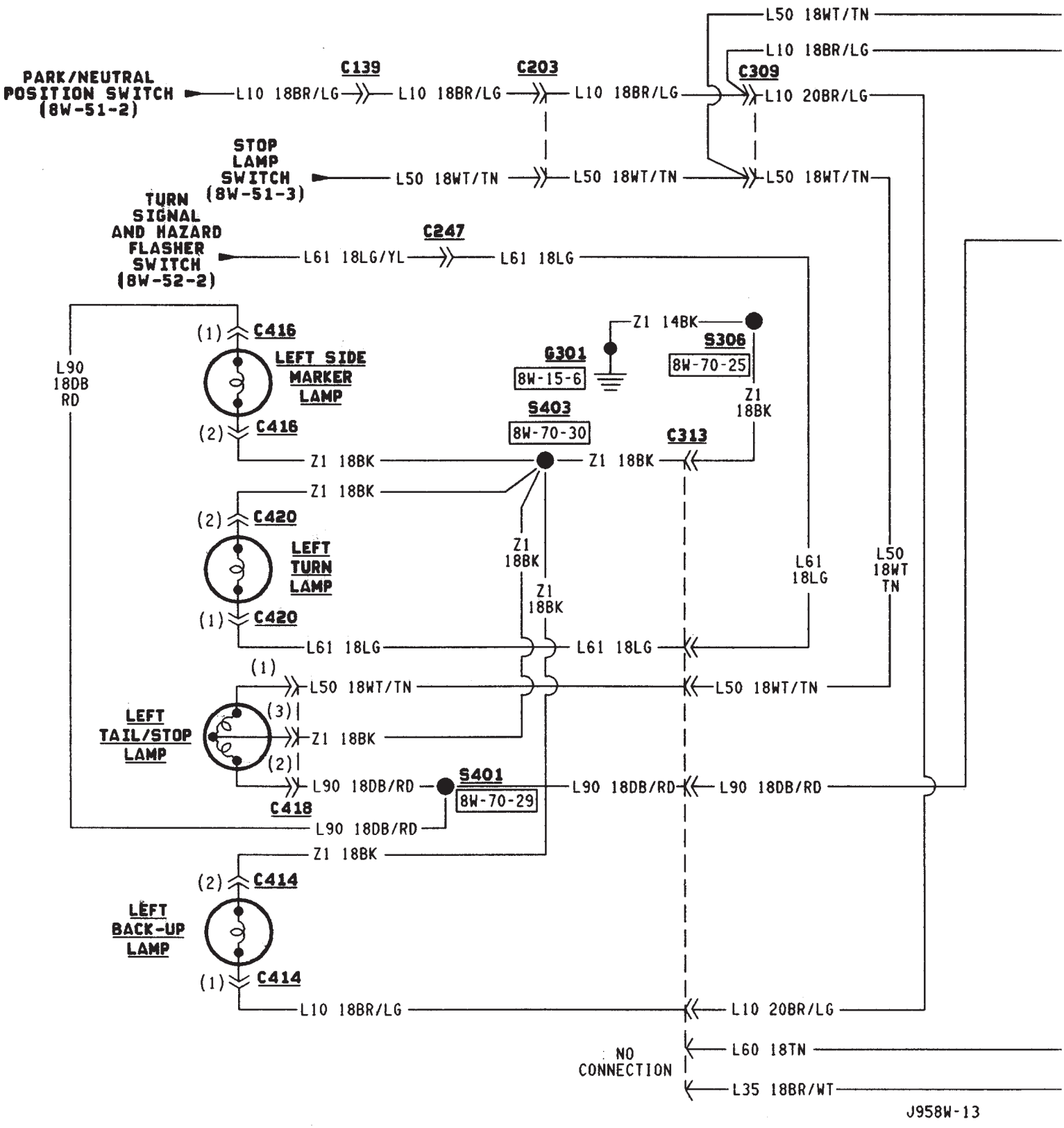
L50 18WT/TN
L10 18BR/LG
PARK/NEUTRAL POSITION SWITCH (8W-51-2)
C139
C203
C309
L10 18BR/LG
L10 18BR/LG
L10 18BR/LG
L10 20BR/LG
STOP LAMP SWITCH (8W-51-3)
L50 18WT/TN
L50 18WT/TN
L50 18WT/TN
TURN SIGNAL AND HAZARD FLASHER SWITCH (8W-52-2)
C247
L61 18LG/YL
L61 18LG
Z1 14BK
S306
8W-70-25
G301
8W-15-6
Z1 18BK
S403
8W-70-30
C313
C416
LEFT SIDE MARKER LAMP
L90 18DB RD
Z1 18BK
Z1 18BK
Z1 18BK
C420
LEFT TURN LAMP
Z1 18BK
Z1 18BK
L61 18LG
L50 18WT TN
L61 18LG
L61 18LG
L50 18WT/TN
L50 18WT/TN
LEFT TAIL/STOP LAMP
Z1 18BK
L90 18DB/RD
S401
8W-70-29
L90 18DB/RD
L90 18DB/RD
L90 18DB/RD
C418
L90 18DB/RD
Z1 18BK
C414
LEFT BACK-UP LAMP
C414
L10 18BR/LG
L10 20BR/LG
NO CONNECTION
L60 18TN
L35 18BR/WT
J958W-13

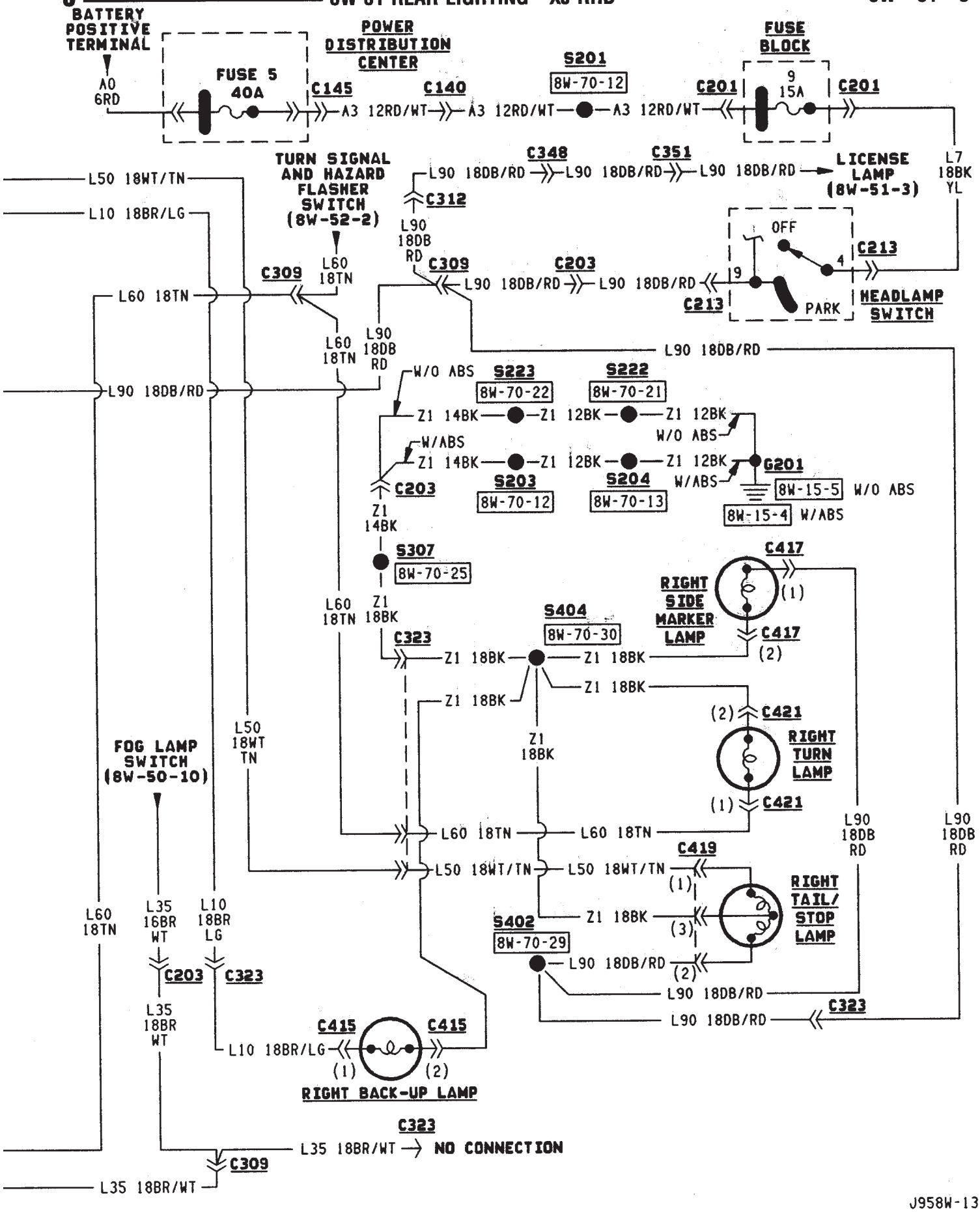
BATTERY POSITIVE TERMINAL
A0 6RD
FUSE 5 40A
POWER DISTRIBUTION CENTER
C145
C140
A3 12RD/WT
S201
8W-70-12
FUSE BLOCK
C201
9 15A
LICENSE LAMP (8W-51-3)
L7 18BK YL
C348
C351
L90 18DB/RD
TURN SIGNAL AND HAZARD FLASHER SWITCH (8W-52-2)
C312
L50 18WT/TN
L10 18BR/LG
L60 18TN
C309
C203
OFF
PARK
C213
HEADLAMP SWITCH
L90 18DB/RD
W/O ABS
W/ABS
S223
8W-70-22
S222
8W-70-21
Z1 14BK
Z1 12BK
G201
8W-15-5
8W-15-4
S203
8W-70-12
S204
8W-70-13
Z1 14BK
S307
8W-70-25
Z1 18BK
C323
S404
8W-70-30
C417
RIGHT SIDE MARKER LAMP
C421
RIGHT TURN LAMP
L50 18WT TN
FOG LAMP SWITCH (8W-50-10)
L35 16BR WT
L10 18BR LG
L35 18BR WT
C419
RIGHT TAIL/ STOP LAMP
S402
8W-70-29
C415
L10 18BR/LG
RIGHT BACK-UP LAMP
L35 18BR/WT
NO CONNECTION

J958W-13

TURN SIGNALS

TURN SIGNAL RELAY

In the RUN position, the ignition switch connects circuit A1 from fuse 6 in the Power Distribution Center (PDC) to circuit A21. Circuit A21 connects to the turn signal relay.

Circuit L9 from fuse 4 in the PDC supplies battery voltage to the relay. Circuit Z1 provides ground for the relay.

Circuit L5 from the relay connects to the multi-function switch to supply power to the turn signals. The multi-function switch supplies voltage to the turn signals and side marker lamps on circuits L60 and L61.

Circuit L12 from the relay connects to the multi-function switch and the hazard flasher relay.

TURN SIGNALS

When the operator selects the right turn signal, the multi-function switch connects power from circuit L5 to circuit L60. Circuit L60 feeds the right front and right rear turn signal lamp. Circuit L60 also splices to power the right turn signal indicator lamp on the instrument cluster.

When the operator selects the right turn signal, the multi-function switch connects power from circuit L5 to circuit L61. Circuit L61 feeds the left front and left rear turn signal lamp. Circuit L61 also splices to power the left turn signal indicator lamp on the instrument cluster.

Circuit Z1 provides ground for the turn signal lamps.

HELPFUL INFORMATION

- The turn signal lamps are the same lamps used for the hazard flasher.
- Check fuse 6 in the PDC.

HAZARD FLASHERS

When the operator selects the hazard flashers, the multi-function switch connects circuit L12 from the hazard flasher relay to circuits L60 and L61.

Circuit L60 feeds the right front and right rear turn signal lamp. Circuit L60 also splices to power the right turn signal indicator lamp on the instrument cluster.

Circuit L61 feeds the left front and left rear turn signal lamp. Circuit L61 also splices to power the left turn signal indicator lamp on the instrument cluster.

Circuit Z1 provides ground for the hazard flasher lamps.

HELPFUL INFORMATION

- The hazard flasher lamps are the same lamps used for the turn signals.

DIAGRAM INDEX

Component	Page
ABS Control Module	8W-52-3
Flasher Relay	8W-52-2
Fuse 4 (PDC)	8W-52-2
Fuse 6 (PDC)	8W-52-2
Ignition Switch	8W-52-2
Instrument Cluster	8W-52-2
Powertrain Control Module	8W-52-3
Stop Lamp Switch	8W-52-3
Transmission Control Module	8W-52-3
Telltale Connector (Instrument Cluster)	8W-52-4
Turn Signal Relay	8W-52-4
Turn Signal Switch	8W-52-2

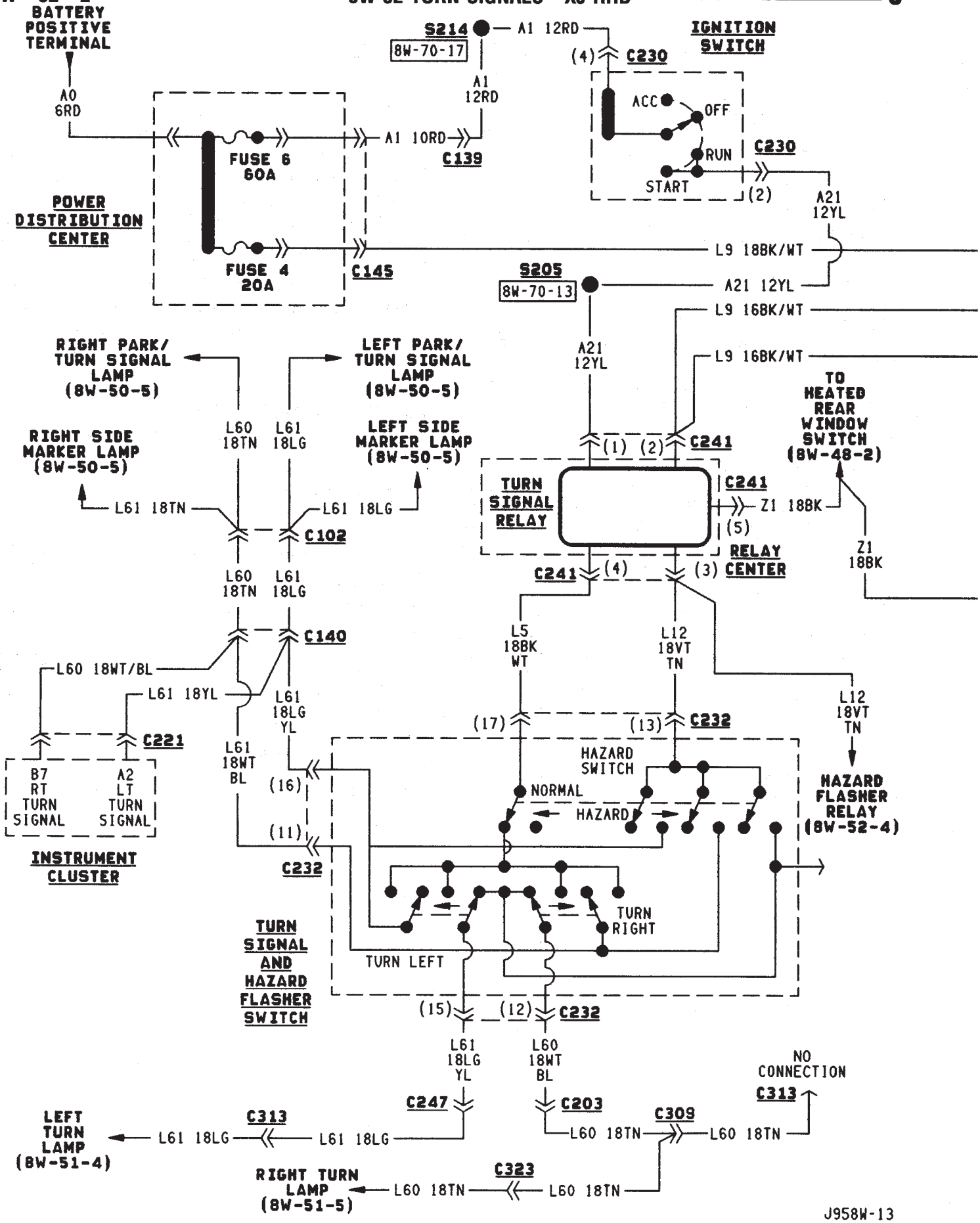
BATTERY POSITIVE TERMINAL
A0 6RD
POWER DISTRIBUTION CENTER
FUSE 6 60A
FUSE 4 20A
C145
A1 10RD
C139
S214
8W-70-17
A1 12RD
A1 12RD
IGNITION SWITCH
(4) C230
ACC
OFF
RUN
START
C230
(2)
A21 12YL
L9 18BK/WT
S205
8W-70-13
A21 12YL
L9 16BK/WT
A21 12YL
L9 16BK/WT
TO HEATED REAR WINDOW SWITCH (8W-48-2)
RIGHT PARK/ TURN SIGNAL LAMP (8W-50-5)
LEFT PARK/ TURN SIGNAL LAMP (8W-50-5)
RIGHT SIDE MARKER LAMP (8W-50-5)
LEFT SIDE MARKER LAMP (8W-50-5)
L60 18TN
L61 18LG
L61 18TN
L61 18LG
C102
(1) (2) C241
TURN SIGNAL RELAY
C241
Z1 18BK
(5)
RELAY CENTER
Z1 18BK
C241 (4) (3)
L60 18TN
L61 18LG
C140
L5 18BK WT
L12 18VT TN
L60 18WT/BL
L61 18YL
L61 18LG YL
L12 18VT TN
(17) (13) C232
C221
B7 RT TURN SIGNAL
A2 LT TURN SIGNAL
INSTRUMENT CLUSTER
L61 18WT BL
(16)
(11)
C232
HAZARD SWITCH
NORMAL
HAZARD
HAZARD FLASHER RELAY (8W-52-4)
TURN SIGNAL AND HAZARD FLASHER SWITCH
TURN RIGHT
TURN LEFT
(15) (12) C232
L61 18LG YL
L60 18WT BL
NO CONNECTION
C313
C247
C203
C309
LEFT TURN LAMP (8W-51-4)
C313
L61 18LG
L61 18LG
L60 18TN
L60 18TN
C323
RIGHT TURN LAMP (8W-51-5)
L60 18TN
L60 18TN
J958W-13

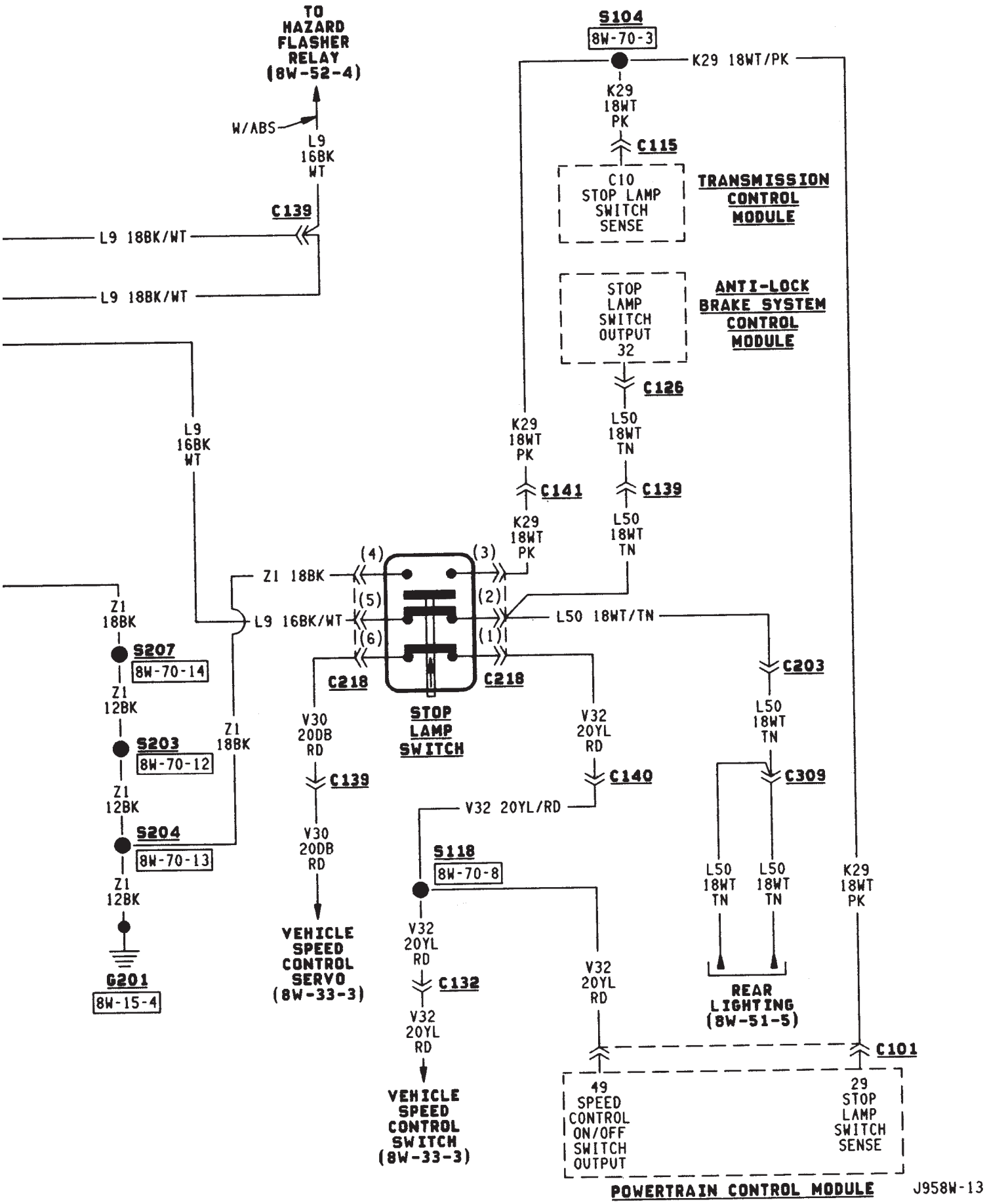
TO HAZARD FLASHER RELAY (8W-52-4)
W/ABS
L9 16BK WT
C139
L9 18BK/WT
L9 18BK/WT
S104
8W-70-3
K29 18WT/PK
K29 18WT PK
C115
C10 STOP LAMP SWITCH SENSE
TRANSMISSION CONTROL MODULE
STOP LAMP SWITCH OUTPUT 32
ANTI-LOCK BRAKE SYSTEM CONTROL MODULE
C126
L50 18WT TN
K29 18WT PK
C141
C139
L50 18WT TN
K29 18WT PK
L9 16BK WT
Z1 18BK
L9 16BK/WT
L50 18WT/TN
(4)
(3)
(5)
(2)
(6)
(1)
C218
C218
STOP LAMP SWITCH
C203
L50 18WT TN
C309
Z1 18BK
S207
8W-70-14
Z1 12BK
S203
8W-70-12
Z1 12BK
S204
8W-70-13
Z1 12BK
Z1 18BK
V30 20DB RD
C139
V30 20DB RD
V32 20YL RD
C140
V32 20YL/RD
S118
8W-70-8
L50 18WT TN
L50 18WT TN
K29 18WT PK
G201
8W-15-4
VEHICLE SPEED CONTROL SERVO (8W-33-3)
V32 20YL RD
C132
V32 20YL RD
V32 20YL RD
REAR LIGHTING (8W-51-5)
C101
VEHICLE SPEED CONTROL SWITCH (8W-33-3)
49 SPEED CONTROL ON/OFF SWITCH OUTPUT
29 STOP LAMP SWITCH SENSE
POWERTRAIN CONTROL MODULE
J958W-13

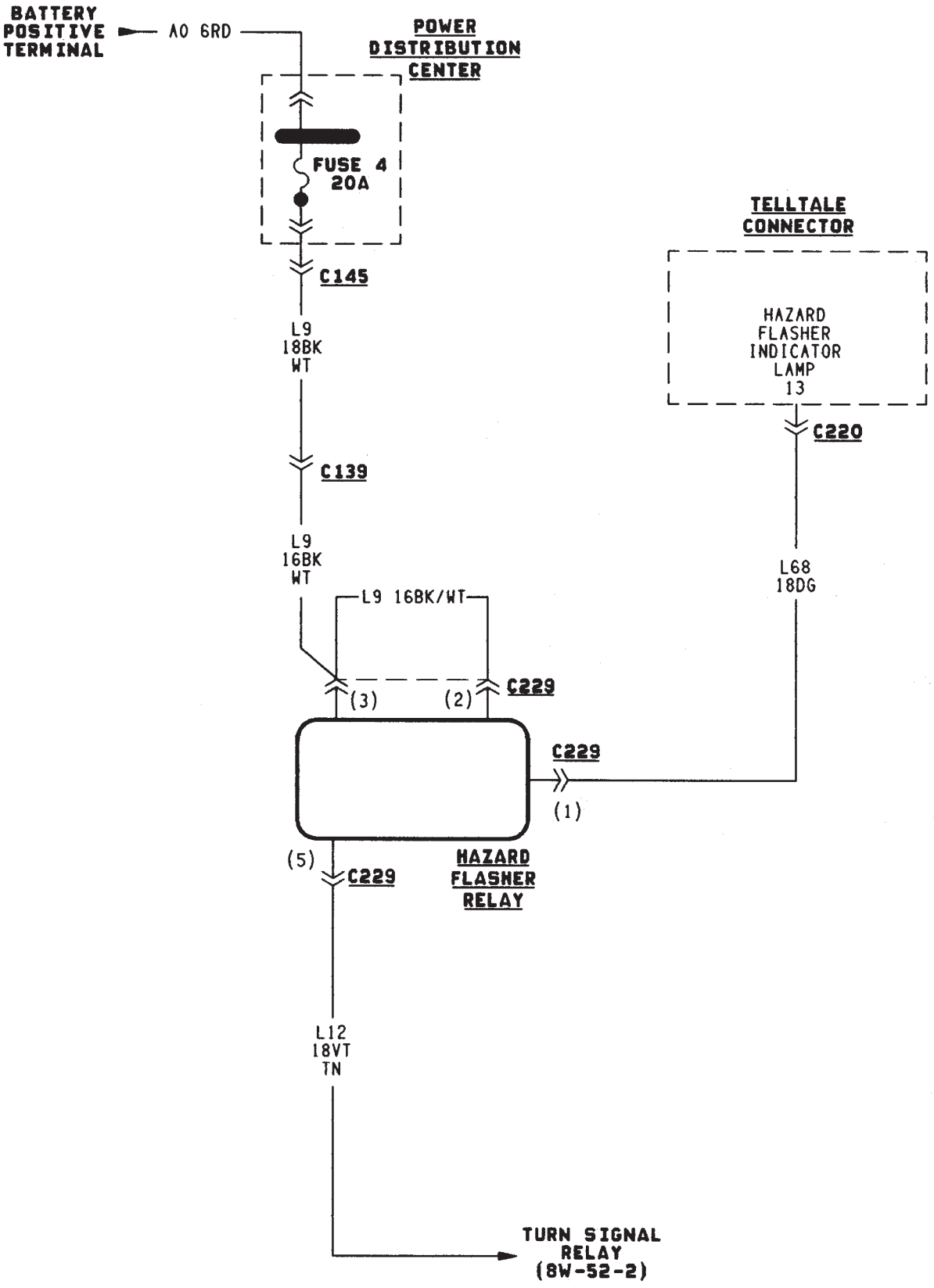
BATTERY POSITIVE TERMINAL
A0 6RD
POWER DISTRIBUTION CENTER
FUSE 4 20A
C145
L9 18BK WT
C139
L9 16BK WT
L9 16BK/WT
(3)
(2)
C229
C229
(1)
(5)
C229
HAZARD FLASHER RELAY
L12 18VT TN
TURN SIGNAL RELAY (8W-52-2)
TELLTALE CONNECTOR
HAZARD FLASHER INDICATOR LAMP 13
C220
L68 18DG

J958W-13

WIPERS

INDEX

page

Diagram Index 2
Intermittent Wipers 1
Rear Wiper System 1
Standard Wipers 1

STANDARD WIPERS

The standard wiper system operates at either LOW or HIGH speeds. In the ACCESSORY or RUN position, the ignition switch connects circuit A1 from fuse 6 in the PDC with circuit A48. Circuit A48 supplies voltage to circuit F86 through fuse 3 in the fuse block.

Circuit F86 is double crimped at the wiper switch. The F86 branch from the wiper switch supplies power to the park switch in the wiper motor. Circuit Z1 from the wiper motor provides ground for the wiper motor and switch.

When the operator moves the wiper switch to the LOW position, battery voltage passes through the switch to circuit V3. Circuit V3 feeds the wiper motor low speed brushes. If the operator selects wiper HIGH speed operation, the wiper switch passes current to circuit V4. Circuit V4 feeds the wiper motor high speed brushes.

As the windshield wiper motor turns, the park switch, internal to the motor, moves from its DOWN position to the UP position. When the wiper switch is turned OFF, the V55 circuit prevents the wipers from stopping in any position but park.

The windshield washer uses a pump motor located inside the windshield washer fluid reservoir. When the washer switch is pressed, power is supplied through the wiper switch to the pump motor on circuit V10. Circuit Z1 provide ground for the pump motor.

INTERMITTENT WIPERS

A circuit breaker powers the standard wiper system. The intermittent wiper system operates at either LOW or HIGH or DELAY speeds.

In the ACCESSORY or RUN position, the ignition switch connects circuit A1 from fuse 6 in the PDC with circuit A48. Circuit A48 supplies voltage to circuit F86 through the circuit breaker in cavity 3 of the fuse block.

Circuit F86 is double crimped at the circuit breaker and supplies power to the wiper switch and the park switch in the wiper motor. Circuit Z1 from the wiper motor provides ground for the wiper motor and switch.

When the operator moves the wiper switch to the LOW position, battery voltage passes through the switch to circuit V3. Circuit V3 feeds the wiper motor low speed brushes. If the operator selects wiper HIGH speed operation, the wiper switch passes current to circuit V4. Circuit V4 feeds the wiper motor high speed brushes.

The DELAY portion of the wiper switch contains a variable resistor. The variable resistor connects to the intermittent wiper module through the wiper switch harness. The amount of delay selected by the operator determines the voltage drop through the resistor and the voltage level received by the intermittent wiper module.

After the intermittent wiper control module determines the amount of delay selected, it cycles the wipers by periodically energizing circuit V3. Circuit V3 powers the wiper motor low speed brushes.

As the windshield wiper motor turns, the park switch, internal to the motor, moves from its DOWN position to the UP position. When the wiper switch is turned OFF, the V55 circuit prevents the wipers from stopping in any position but park.

The windshield washer uses a pump motor located inside the windshield washer fluid reservoir. When the washer switch is pressed, power is supplied through the wiper switch to the pump motor on circuit V10. Circuit Z1 provides ground for the pump motor.

REAR WIPER SYSTEM

In the RUN position, the ignition switch connects circuit A1 from fuse 6 in the PDC with circuit A38. Circuit A38 connects to a fuse block bus bar that powers circuit V15 through the fuse in cavity 19. Circuit V15 supplies power to the rear wiper switch.

In the WIPE or WASH positions, the rear wiper switch supplies voltage to the wiper motor on circuit V13. Circuit Z1 provides ground for the wiper motor.

The rear windshield washer uses a pump motor located inside the windshield washer fluid reservoir. When the rear wiper switch is pressed, power is supplied through the wiper switch to the rear wiper and the pump motor on circuit V20. Circuit Z1 provides ground for the pump motor.

As the rear wiper motor turns, the park switch, internal to the motor, moves from the RUN position to the PARK position. When the wiper switch is turned OFF, the F20 circuit prevents the wipers from stopping in any position but park.

DIAGRAM INDEX

Component	Page
Front Wiper Motor	8W-53-3, 4
Front Washer Pump Motor	8W-53-3, 5
Fuse 3 (Fuse Block)	8W-53-3, 4
Fuse 6 (PDC)	8W-53-3, 4, 6
Fuse 19 (Fuse Block)	8W-53-6
Ignition Switch	8W-53-3, 4, 6
Intermittent Wiper Module	8W-53-5
Rear Washer Pump Motor	8W-53-6
Rear Wiper Motor	8W-53-6
Rear Wiper Switch	8W-53-6
Wiper Switch (Intermittent Wipers)	8W-53-5
Wiper Switch (Standard Wipers)	8W-53-3

STANDARD

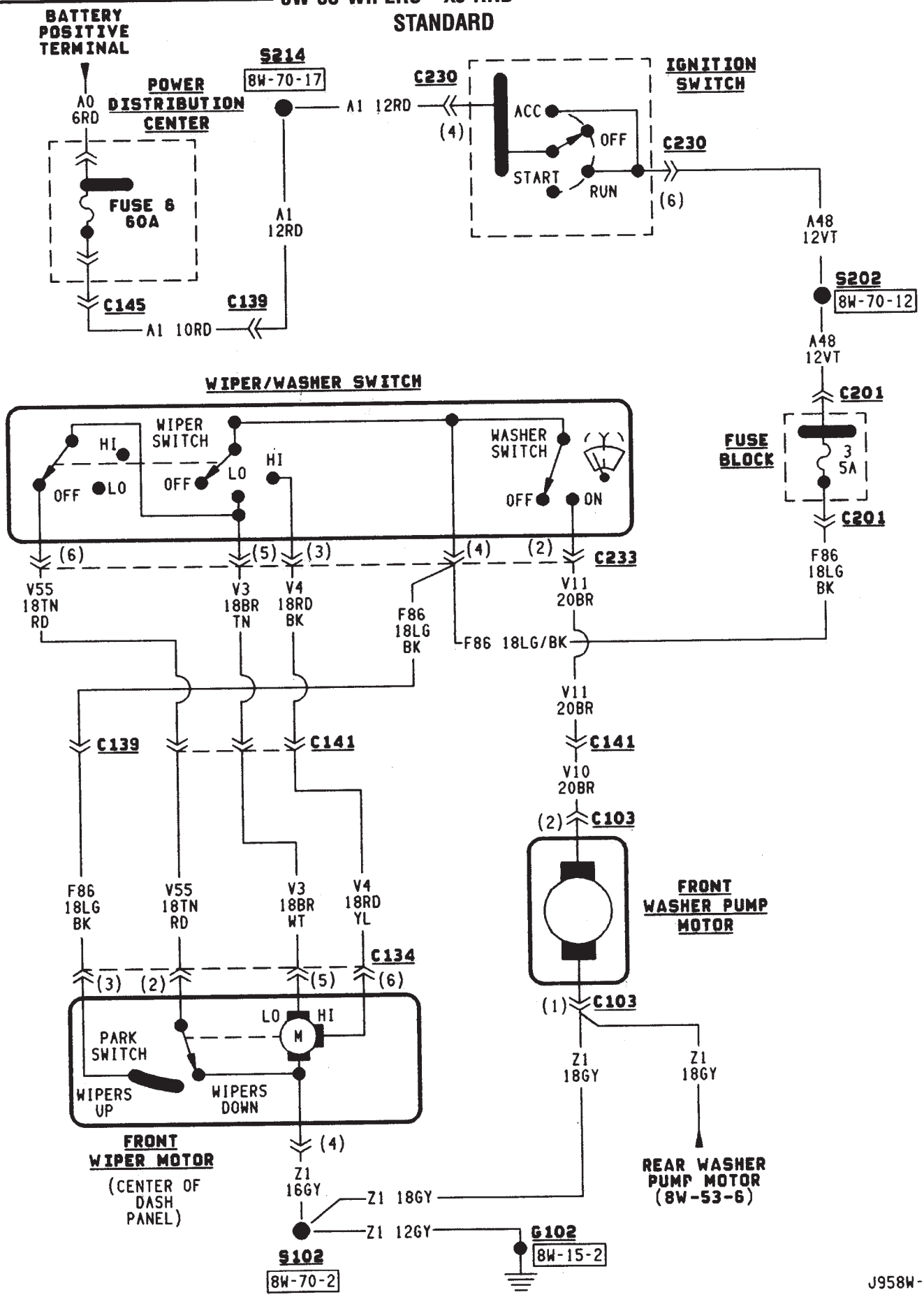

J958W-13

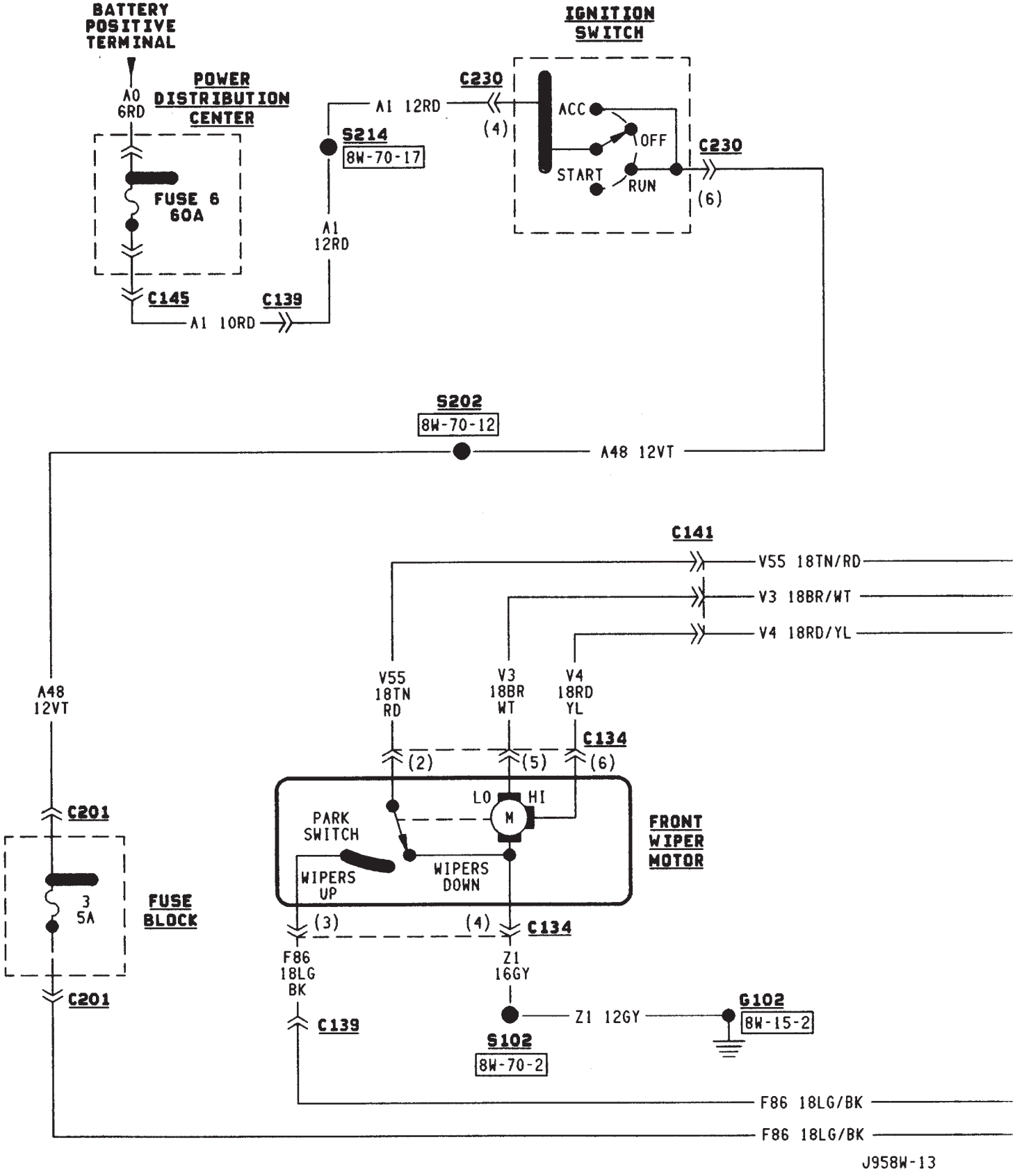
BATTERY POSITIVE TERMINAL
A0 6RD
POWER DISTRIBUTION CENTER
FUSE 6 60A
C145
A1 10RD
C139
A1 12RD
S214
8W-70-17
A1 12RD
C230
(4)
IGNITION SWITCH
ACC
OFF
START
RUN
C230
(6)
S202
8W-70-12
A48 12VT
A48 12VT
C201
3 5A
FUSE BLOCK
C201
C141
V55 18TN/RD
V3 18BR/WT
V4 18RD/YL
V55 18TN RD
V3 18BR WT
V4 18RD YL
C134
(2)
(5)
(6)
LO
HI
M
PARK SWITCH
WIPERS UP
WIPERS DOWN
FRONT WIPER MOTOR
(3)
(4)
C134
F86 18LG BK
C139
Z1 16GY
S102
8W-70-2
Z1 12GY
G102
8W-15-2
F86 18LG/BK
F86 18LG/BK
J958W-13

INTERMITTENT

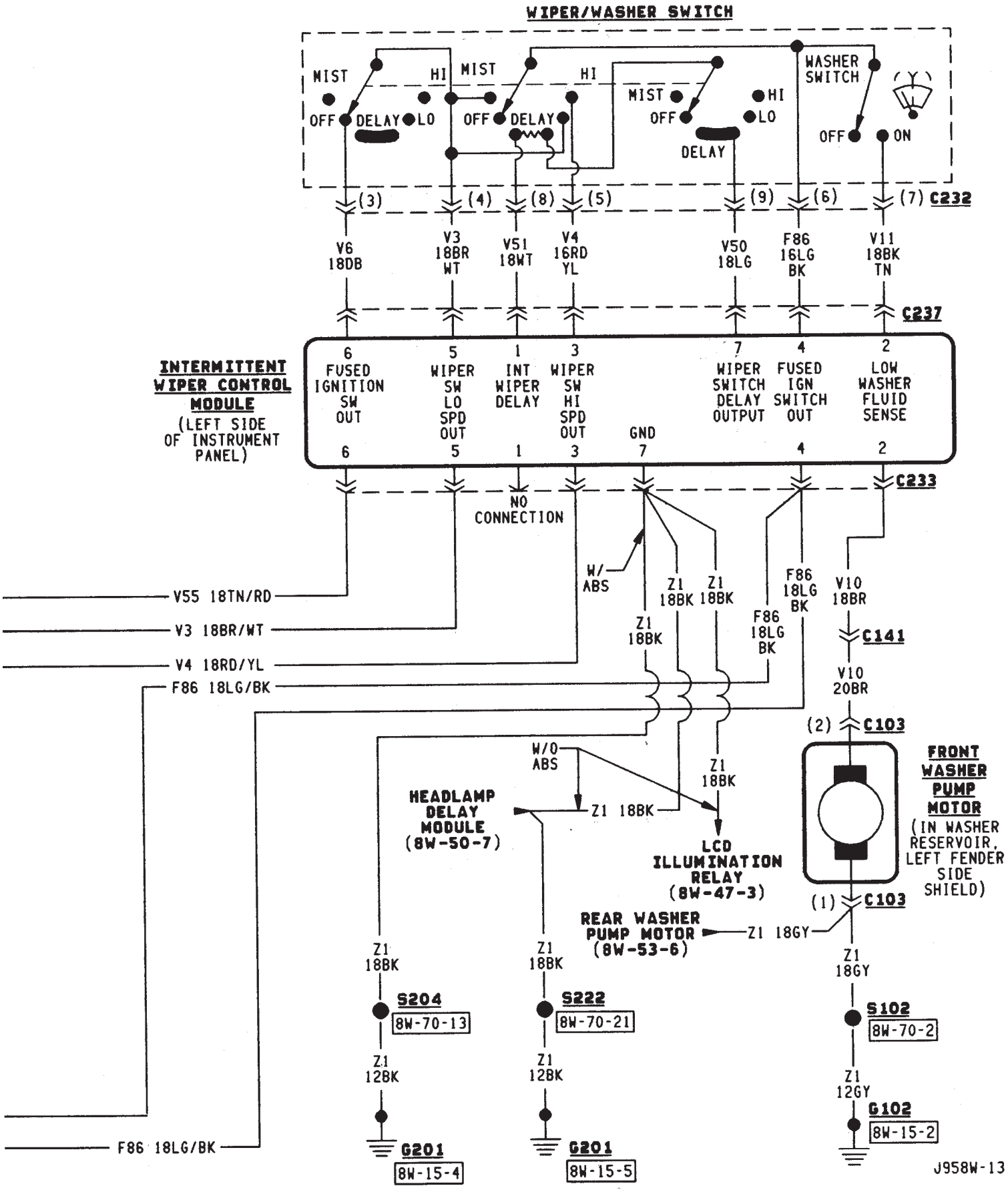

REAR

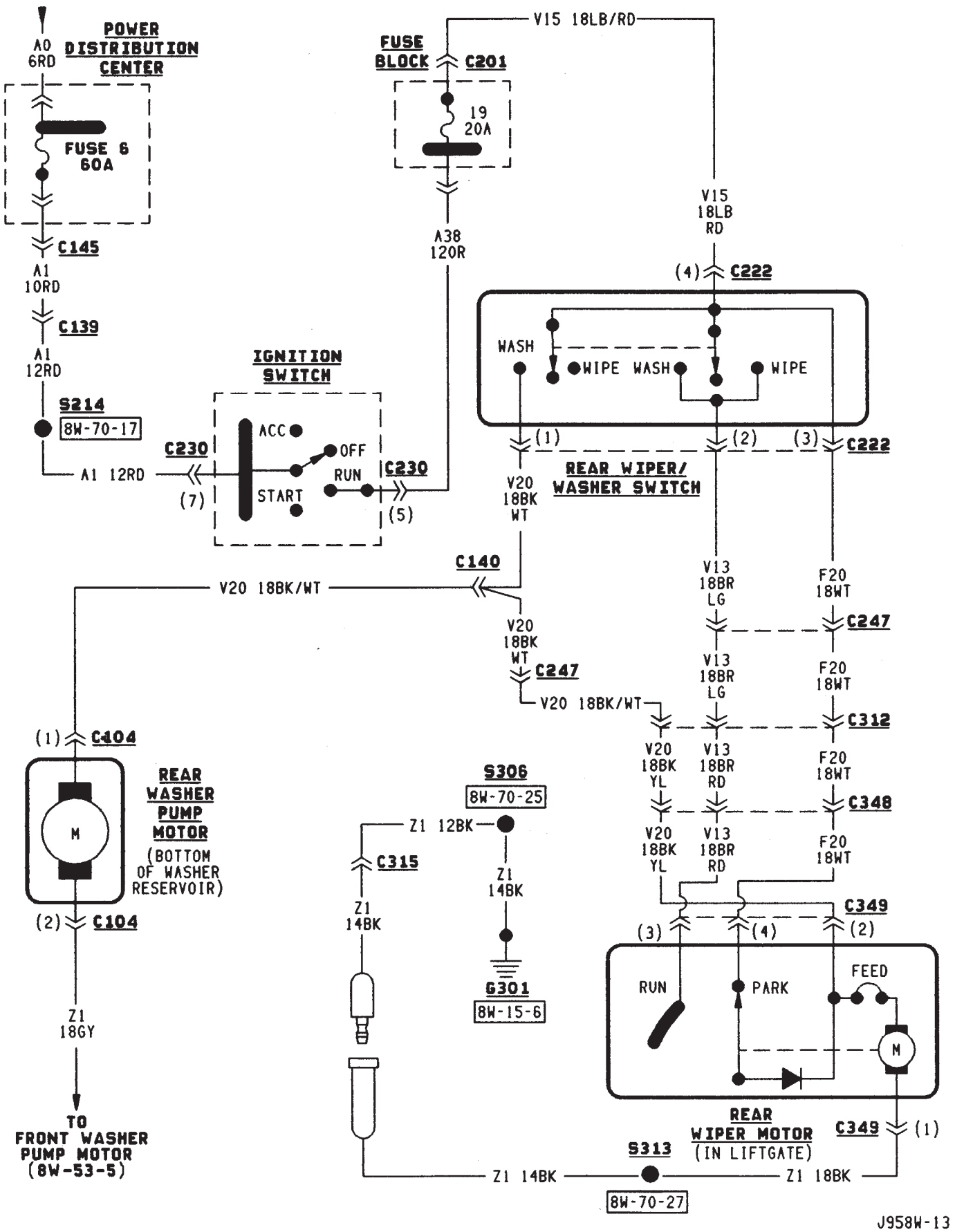

J958W-13

TRAILER TOW

TRAILER TOW

The factory installed trailer tow system in this vehicle uses three relays and a circuit breaker along with the trailer tow wiring connector located below the rear bumper.

Battery voltage for the trailer tow circuit breaker and relays is supplied on circuit A11. This circuit is HOT at all times and connects to the power accessory tap in the fuse block. An in line 10 amp circuit protected breaker protects circuit A11 and the trailer tow circuits. The trailer tow circuit breaker is located in the left rear quarter panel.

STOP LAMP RELAY

Power for the coil side of the stop lamp relay is supplied by circuit L50. This circuit connects to the stop lamps. Ground for the coil side is supplied on circuit Z1.

When the operator depresses the brake pedal, voltage flows through the coil of the relay to ground causing the contacts in the relay to close connecting circuits A11 and 95.

Circuit 95 connects to the left and right turn signal relays. Voltage flows through the closed contacts in the relays to the trailer tow connector.

RIGHT TURN RELAY

Power for the coil side of the right turn relay is supplied by circuit L60. This circuit connects to the right side turn signal lamps. Ground for the coil side of the relay is supplied on circuit Z1.

When the operator turns the right turn signal ON, power flows through the coil in the relay to ground causing the contacts in the relay to switch from there normally CLOSED position to connect circuits 94 and L60.

Circuit 94 is the feed for the contact side of the relay. Circuit L60 connects from the relay to the trailer tow connector.

Circuit 94 is fed power through the normally CLOSED side of the stop lamp relay and circuit A11. The A11 circuit is HOT at all times and protected by a 10 amp circuit breaker located in the left rear quarter panel.

LEFT TURN RELAY

Power for the coil side of the left turn relay is supplied by circuit L61. This circuit connects to the left side turn signal lamps. Ground for the coil side of the relay is supplied on circuit Z1.

When the operator turns the left turn signal ON, power flows through the coil in the relay to ground causing the contacts in the relay to switch from there normally CLOSED position to connect circuits 94 and L61.

Circuit 94 is the feed for the contact side of the relay. Circuit L61 connects from the relay to the trailer tow connector.

Circuit 94 is fed power through the normally CLOSED side of the stop lamp relay and circuit A11. The A11 circuit is HOT at all times and protected by a 10 amp circuit breaker located in the right rear quarter panel.

HELPFUL INFORMATION

- Check the In-Line circuit breaker

DIAGRAM INDEX

Component	Page
Circuit Breaker (In-Line)	8W-54-4
Electric Brake Provision	8W-54-2
Fuse 1 (Fuse Block)	8W-54-4
Fuse 3 (PDC)	8W-54-4
Left Turn Signal Relay	8W-54-3
Left Back-Up Lamp	8W-54-2
Left Side Marker Lamp	8W-54-2
Left Tail/Stop Lamp	8W-54-2
Left Turn Signal Lamp	8W-54-2
Right Turn Signal Relay	8W-54-3
Stop Lamp Relay	8W-54-3
Trailer Tow Connector	8W-54-2

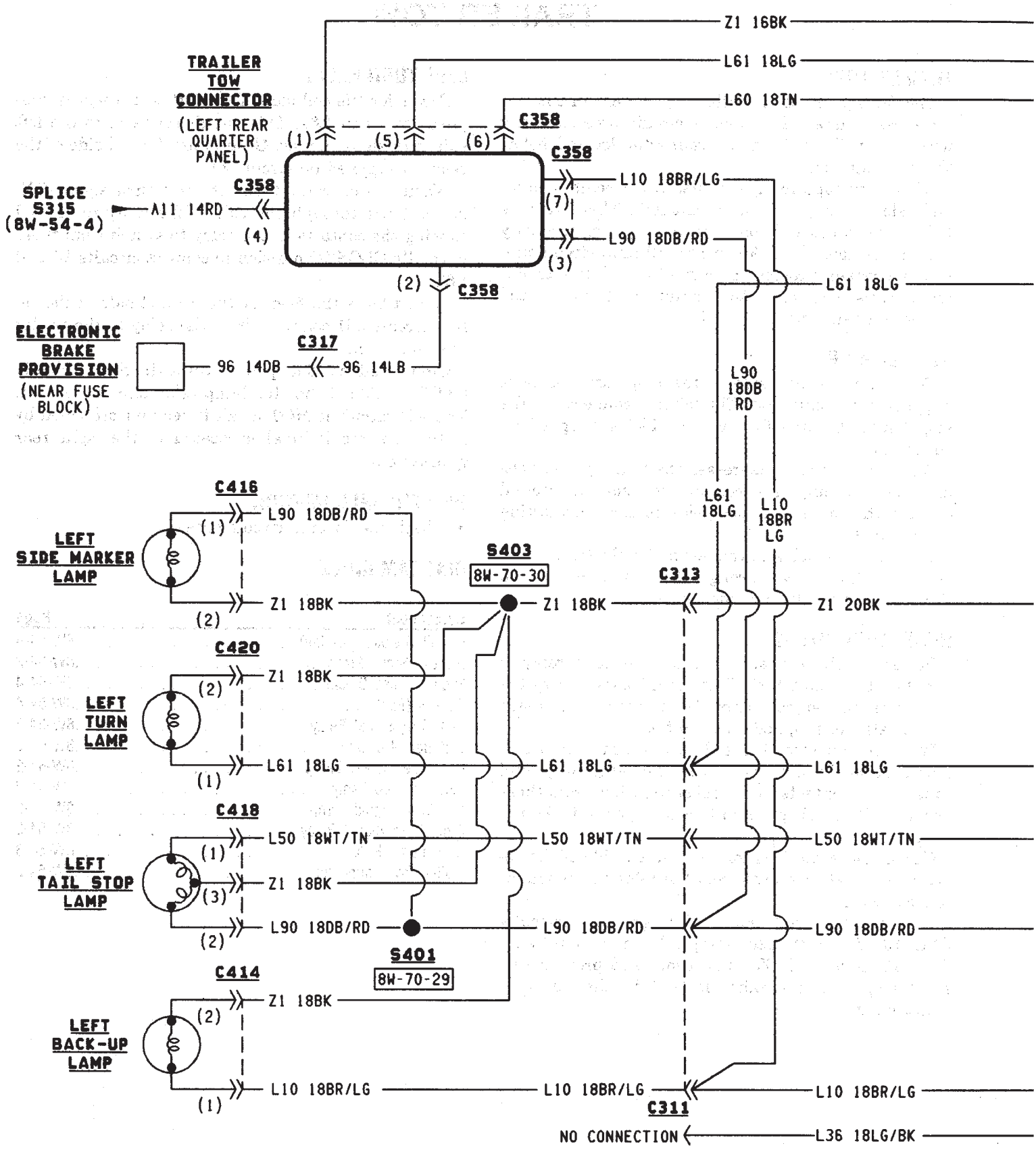
Z1 16BK
L61 18LG
L60 18TN
TRAILER TOW CONNECTOR
(LEFT REAR QUARTER PANEL)
C358
(1)
(5)
(6)
C358
L10 18BR/LG
(7)
L90 18DB/RD
(3)
SPLICE S315 (8W-54-4)
A11 14RD
C358
(4)
(2)
C358
L61 18LG
ELECTRONIC BRAKE PROVISION
(NEAR FUSE BLOCK)
C317
96 14DB
96 14LB
L90 18DB RD
L61 18LG
L10 18BR LG
C416
L90 18DB/RD
(1)
LEFT SIDE MARKER LAMP
S403
8W-70-30
C313
Z1 18BK
Z1 18BK
Z1 20BK
(2)
C420
Z1 18BK
(2)
LEFT TURN LAMP
L61 18LG
L61 18LG
L61 18LG
(1)
C418
L50 18WT/TN
L50 18WT/TN
L50 18WT/TN
(1)
LEFT TAIL STOP LAMP
Z1 18BK
(3)
L90 18DB/RD
L90 18DB/RD
L90 18DB/RD
(2)
S401
8W-70-29
C414
Z1 18BK
(2)
LEFT BACK-UP LAMP
L10 18BR/LG
L10 18BR/LG
L10 18BR/LG
(1)
C311
NO CONNECTION
L36 18LG/BK

J958W-13

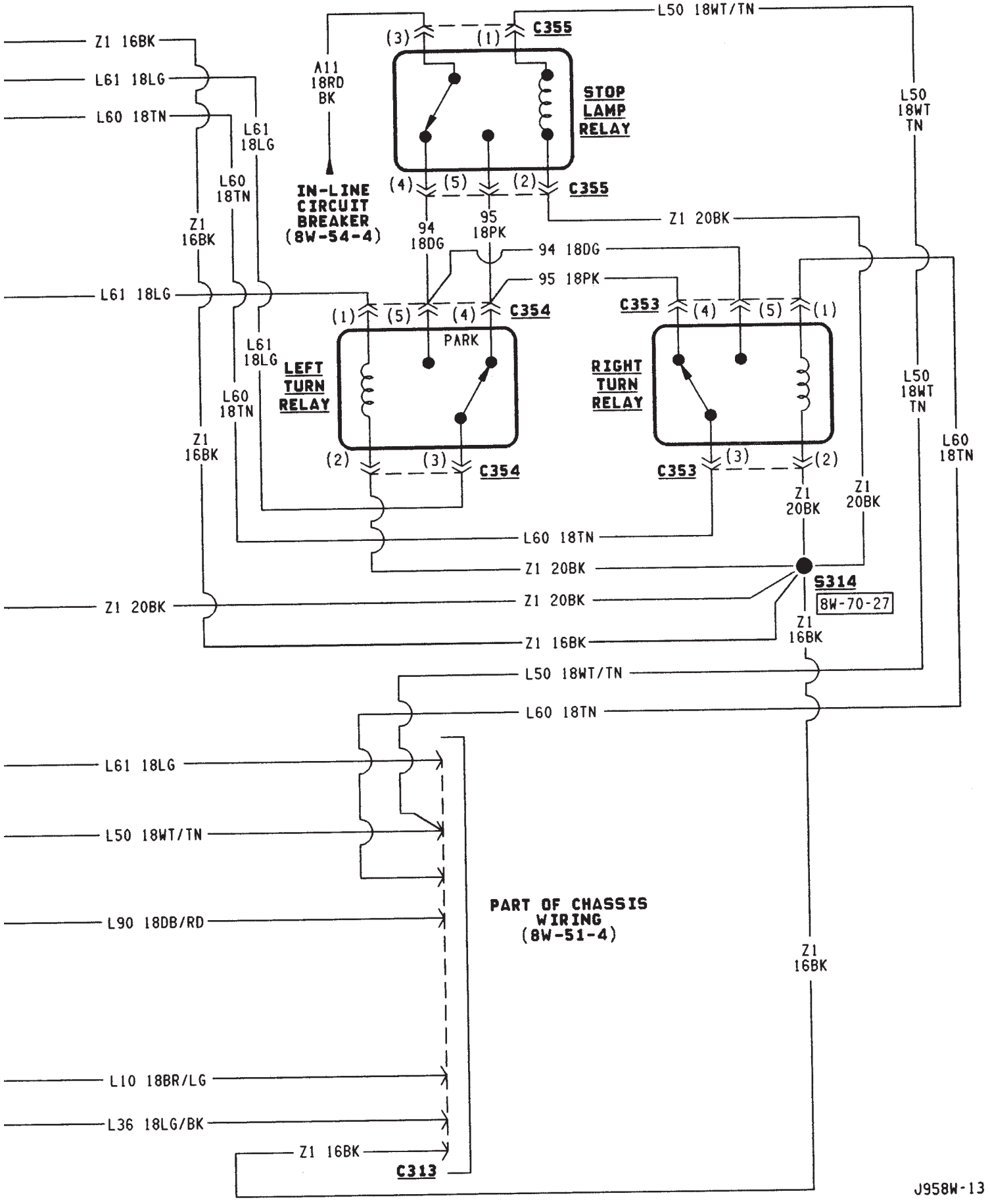
Z1 16BK
L61 18LG
L60 18TN
A11 18RD BK
IN-LINE CIRCUIT BREAKER (8W-54-4)
L61 18LG
L60 18TN
Z1 16BK
L50 18WT/TN
C355
(3)
(1)
STOP LAMP RELAY
(4)
(5)
(2)
C355
94 18DG
95 18PK
Z1 20BK
L50 18WT TN
94 18DG
95 18PK
L61 18LG
C354
(1)
(5)
(4)
PARK
LEFT TURN RELAY
C353
(4)
(5)
(1)
RIGHT TURN RELAY
L61 18LG
L60 18TN
Z1 16BK
L50 18WT TN
L60 18TN
C354
(2)
(3)
C353
(3)
(2)
Z1 20BK
Z1 20BK
L60 18TN
Z1 20BK
S314
8W-70-27
Z1 20BK
Z1 20BK
Z1 16BK
Z1 16BK
L50 18WT/TN
L60 18TN
L61 18LG
L50 18WT/TN
L90 18DB/RD
PART OF CHASSIS WIRING (8W-51-4)
Z1 16BK
L10 18BR/LG
L36 18LG/BK
Z1 16BK
C313
J958W-13

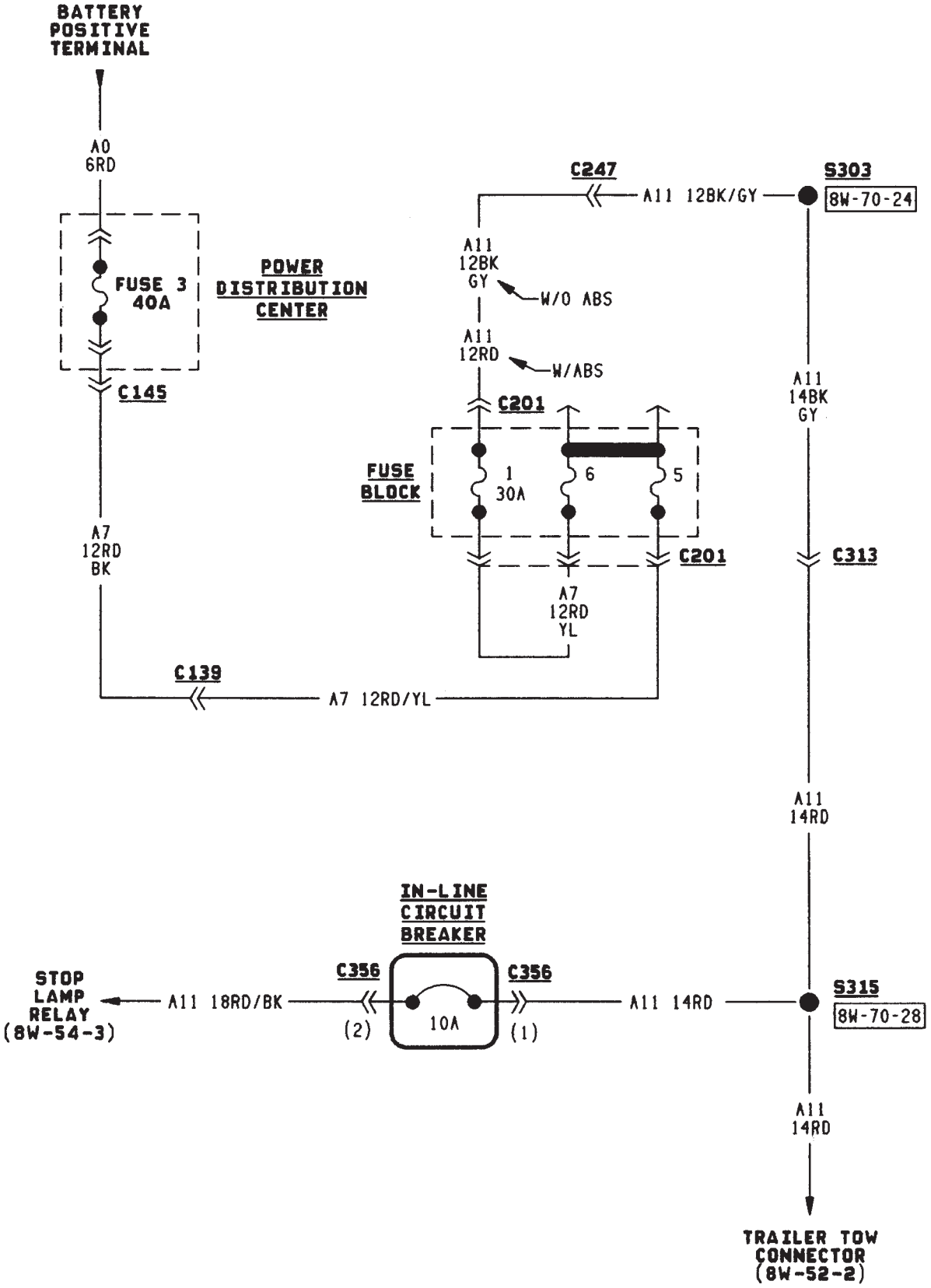
BATTERY POSITIVE TERMINAL
A0 6RD
FUSE 3 40A
POWER DISTRIBUTION CENTER
C145
A7 12RD BK
C139
A7 12RD/YL
C247
A11 12BK/GY
S303
8W-70-24
A11 12BK GY
W/O ABS
A11 12RD
W/ABS
C201
FUSE BLOCK
1 30A
6
5
C201
A7 12RD YL
A11 14BK GY
C313
A11 14RD
IN-LINE CIRCUIT BREAKER
C356
C356
10A
(2)
(1)
STOP LAMP RELAY (8W-54-3)
A11 18RD/BK
A11 14RD
S315
8W-70-28
A11 14RD
TRAILER TOW CONNECTOR (8W-52-2)

J958W-13

POWER WINDOWS

INDEX

page

Diagram Index 2
Helpful Information 2
Power Windows 1

POWER WINDOWS

When the ignition switch is in the ACCESSORY or RUN position, it connects circuit A1 from fuse 6 in the Power Distribution Center (PDC) to circuit A48. Circuit A48 powers circuit F81 through fuse 12 in the fuse block. Circuit F81 supplies voltage to the power window system.

Circuit F81 connects to the master window switch. Circuit Z1 provides ground for the power windows.

A LOCK-OUT feature is provided on the driver's door window switch. When this feature is engaged the other windows in the system will not operate.

RIGHT FRONT WINDOW OPERATION

When the operator selects window DOWN operation power is supplied on the F81 circuit through the switch to circuit Q12. Circuit Q12 goes from the switch to the power window motor. Ground for the motor is supplied on the Q22 circuit back to the switch. A bus bar, internal to the switch, connects the Q22 circuit to the Z1 circuit.

For window UP operation the circuits are reversed. Circuit Q22 is the feed, and circuit Q12 is the ground.

LEFT FRONT WINDOW OPERATION

When the DRIVER selects window DOWN operation, power is supplied on the F81 circuit through the switch to circuit Q26.

Circuit Q26 goes from the drivers door switch to the left front door switch. Power is passed through this switch to circuit Q21. The Q21 circuit then goes to the right front window motor.

Ground for the window motor is supplied on the Q11 circuit back to the right door switch. Circuity internal to the switch then passes the ground to circuit Q16. Circuit Q16 goes from the right front door switch to the master switch. A bus bar, internal to the switch, connects the Q16 circuit to the Z1 circuit.

For window UP operation the circuits are reversed. Circuits Q16 and Q11 are the feeds, and circuits Q21 and Q26 are the grounds.

If the switch is being operated from the PASSENGER'S front door, and the operator is requesting window DOWN operation, power is supplied on the Q1 circuit from the driver's master switch circuit through the switch to the Q21 circuit.

Ground for the motor is supplied on the Q11 circuit through the switch and back to the master switch on circuit Q16. A bus bar, internal to the switch, connects the Q16 circuit to the Z1 circuit.

For window UP operation, the circuits are reversed. Circuit Q11 is the power and circuit Q21 is the ground.

LEFT REAR WINDOW

When the DRIVER selects window DOWN operation power is supplied on the F81 circuit through the switch to circuit Q17.

Circuit Q17 goes from the drivers door switch to the left rear door power window switch. Power is passed through the switch to circuit Q22. The Q22 circuit then goes to the left rear window motor.

Ground for the window motor is supplied on the Q12 circuit back to the left rear door switch. Circuity internal to the switch then passes the ground to circuit Q27. Circuit Q27 goes from the left rear door switch to the master switch. A bus bar, internal to the switch, connects the Q27 circuit to the Z1 circuit.

For window UP operation the circuits are reversed. Circuits Q27 and Q12 are the feeds, and circuits Q22 and Q17 are the grounds.

If the switch is being operated from the LEFT REAR door, and the operator is requesting window DOWN operation, power is supplied on the Q1 circuit from the driver's master switch circuit through the switch to the Q22 circuit.

Ground for the motor is supplied on the Q12 circuit through the switch and to circuit Q27. Circuit Q27 connects to the master window switch. A bus bar, internal to the switch, connects the Q27 circuit to the Z1 circuit.

For window UP operation, the circuits are reversed. Circuit Q12 is the power and circuits Q22, and Q17 are the grounds.

RIGHT REAR WINDOW

When the DRIVER selects window DOWN operation, power is supplied on the F81 circuit through the switch to circuit Q18.

Circuit Q18 goes from the drivers door switch to the right rear door window switch connector. Power is passed through this switch to circuit Q22. The Q22 circuit then goes to the right rear window motor.

Ground for the window motor is supplied on the Q12 circuit back to the right rear door switch. Circuity internal to the switch then passes the ground to circuit Q28. Circuit Q28 goes from the right rear door switch to the master switch. A bus bar, internal to the switch, connects the Q28 circuit to the Z1 circuit.

For window UP operation the circuits are reversed. Circuits Q28 and Q12 are the feeds, and circuits Q22, Q33 and Q18 are the grounds.

If the switch is being operated from the RIGHT REAR door, and the operator is requesting window DOWN operation, power is supplied on the Q1 circuit from the driver's master switch circuit through the switch to the Q22 circuit.

Ground for the motor is supplied on the Q12 circuit through the switch and back to the master switch on circuit Q28. A bus bar, internal to the switch, connects the Q28 circuit to the Z1 circuit.

For window UP operation, the circuits are reversed. Circuit Q12 is the power and circuits Q22 and Q18 are the ground.

HELPFUL INFORMATION

Refer to the appropriate group of the Service Manual for test procedures.

DIAGRAM INDEX

Component	Page
Fuse 6 (PDC)	8W-60-3
Fuse 12 (Fuse Block)	8W-60-3
Ignition Switch	8W-60-3
Power Window Door Switches	8W-60-4
Power Window Master Switch	8W-60-3
Power Window Motors	8W-60-4

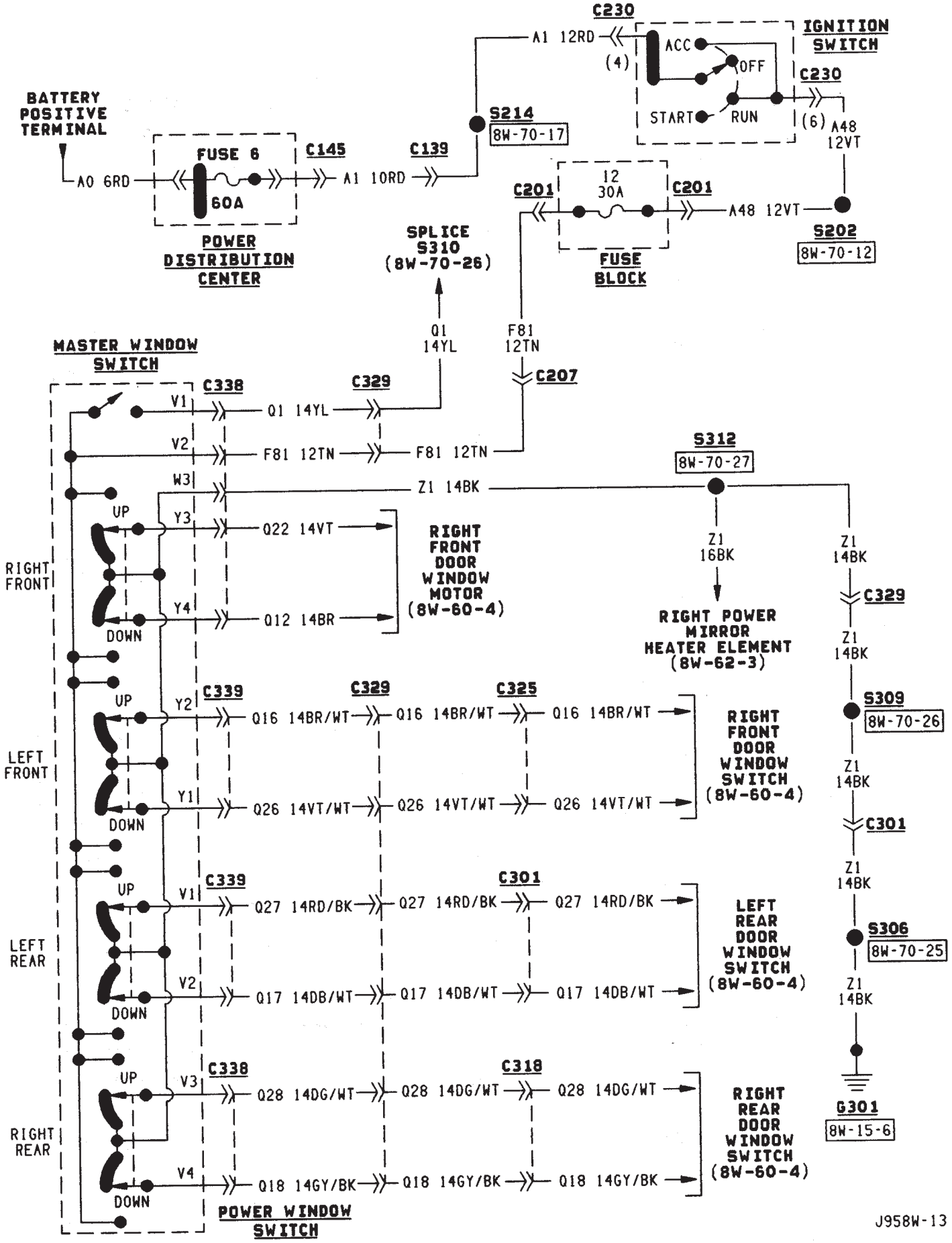
C230
A1 12RD
(4)
ACC
OFF
START
RUN
IGNITION SWITCH
C230
(6) A48 12VT
BATTERY POSITIVE TERMINAL
A0 6RD
FUSE 6
60A
C145
C139
A1 10RD
S214
8W-70-17
POWER DISTRIBUTION CENTER
SPLICE S310 (8W-70-26)
C201
12 30A
C201
A48 12VT
S202
8W-70-12
FUSE BLOCK
Q1 14YL
F81 12TN
C207
MASTER WINDOW SWITCH
C338
C329
V1
Q1 14YL
V2
F81 12TN
F81 12TN
S312
8W-70-27
W3
Z1 14BK
UP
Y3
Q22 14VT
RIGHT FRONT
DOWN
Y4
Q12 14BR
RIGHT FRONT DOOR WINDOW MOTOR (8W-60-4)
Z1 16BK
RIGHT POWER MIRROR HEATER ELEMENT (8W-62-3)
Z1 14BK
C329
Z1 14BK
S309
8W-70-26
Z1 14BK
C301
Z1 14BK
S306
8W-70-25
Z1 14BK
G301
8W-15-6
C339
C329
C325
UP
Y2
Q16 14BR/WT
Q16 14BR/WT
Q16 14BR/WT
LEFT FRONT
DOWN
Y1
Q26 14VT/WT
Q26 14VT/WT
Q26 14VT/WT
RIGHT FRONT DOOR WINDOW SWITCH (8W-60-4)
C339
C301
UP
V1
Q27 14RD/BK
Q27 14RD/BK
Q27 14RD/BK
LEFT REAR
DOWN
V2
Q17 14DB/WT
Q17 14DB/WT
Q17 14DB/WT
LEFT REAR DOOR WINDOW SWITCH (8W-60-4)
C338
C318
UP
V3
Q28 14DG/WT
Q28 14DG/WT
Q28 14DG/WT
RIGHT REAR
DOWN
V4
Q18 14GY/BK
Q18 14GY/BK
Q18 14GY/BK
RIGHT REAR DOOR WINDOW SWITCH (8W-60-4)
POWER WINDOW SWITCH
J958W-13

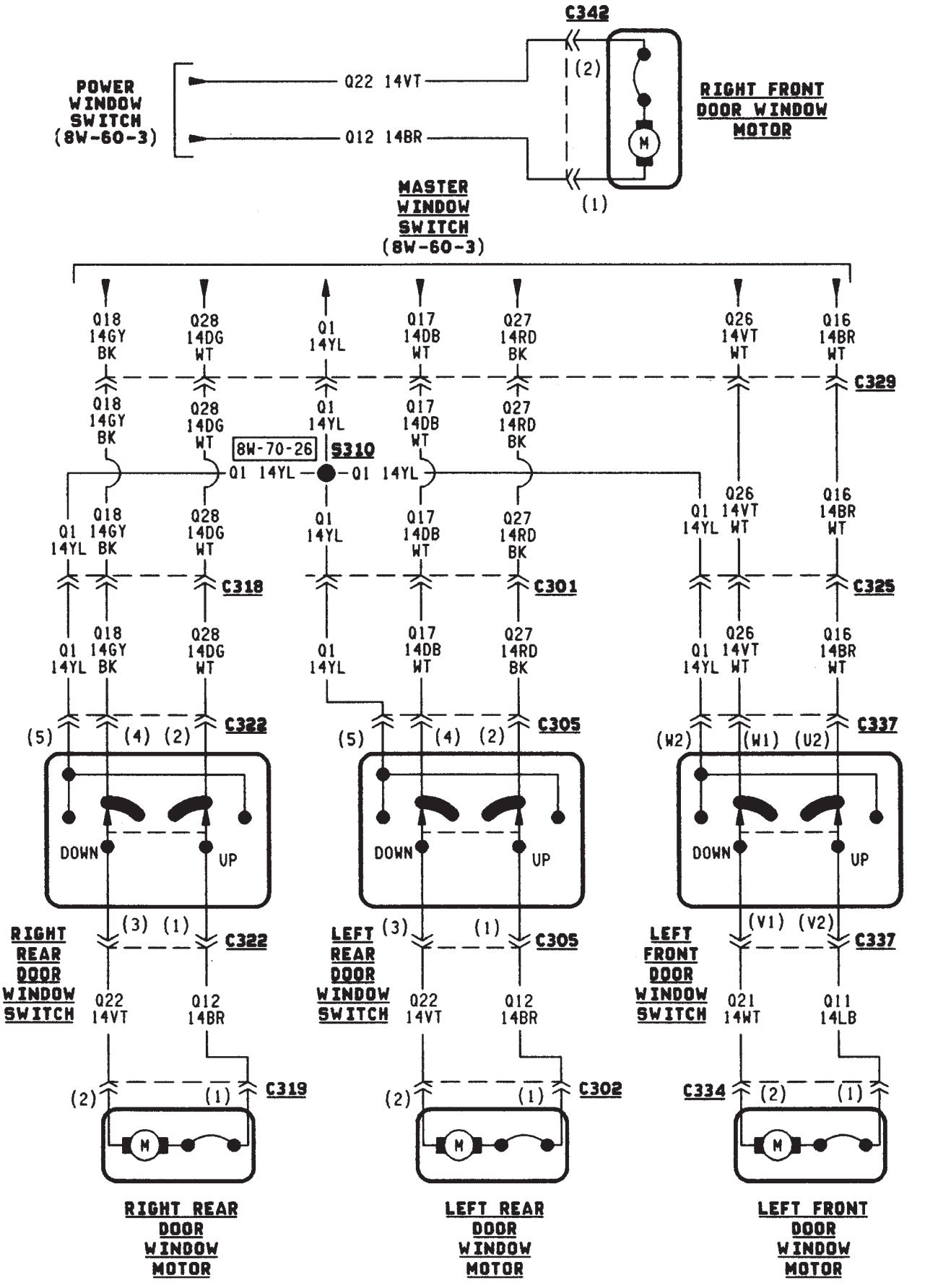
C342
POWER WINDOW SWITCH (8W-60-3)
Q22 14VT
Q12 14BR
(2)
(1)
RIGHT FRONT DOOR WINDOW MOTOR
MASTER WINDOW SWITCH (8W-60-3)
Q18 14GY BK
Q28 14DG WT
Q1 14YL
Q17 14DB WT
Q27 14RD BK
Q26 14VT WT
Q16 14BR WT
C329
8W-70-26
S310
C318
C301
C325
C322
C305
C337
(5)
(4)
(2)
(W2)
(W1)
(U2)
DOWN
UP
RIGHT REAR DOOR WINDOW SWITCH
LEFT REAR DOOR WINDOW SWITCH
LEFT FRONT DOOR WINDOW SWITCH
(3)
(1)
(V1)
(V2)
Q22 14VT
Q12 14BR
Q21 14WT
Q11 14LB
C319
C302
C334
M
RIGHT REAR DOOR WINDOW MOTOR
LEFT REAR DOOR WINDOW MOTOR
LEFT FRONT DOOR WINDOW MOTOR

J958W-13

POWER DOOR LOCKS

POWER DOOR LOCKS

Two relays provide power for the power door lock motors. The Unlock relay provides power for the unlock circuits while the Lock relay powers the lock circuits. Either power door lock switch can operate the Unlock and Lock relays.

LOCK RELAY

Circuit A7 from fuse 3 in the Power Distribution Center (PDC) powers circuits P37 and P38 through fuse 6 in the fuse block. When either power door lock switch is put in the LOCK position, the switch connects circuit P38 to circuit P35. Circuit P35 supplies power to the coil side of the lock relay, causing the relay contacts to close. Circuit Z1 provides ground for the coil side of the lock relay.

When the lock relay contacts close, they connect battery voltage from circuit P37 to circuit P2. Circuit P2 then supplies battery voltage to the power door lock motors to LOCK the doors.

When the power doors LOCK, ground for the motors is on circuit P34 through the normally closed contacts in the door unlock relay to ground on circuit Z1.

UNLOCK RELAY

Circuit A7 from fuse 3 in the Power Distribution Center (PDC) powers circuits P37 and P38 through fuse 6 in the fuse block. When either power door lock switch is put in the UNLOCK position, the switch connects circuit P38 to circuit P36. Circuit P36 supplies power to the coil side of the unlock relay, causing the relay contacts to close. Circuit Z1 provides ground for the coil side of the unlock relay.

When the unlock relay contacts close, they connect battery voltage from circuit P37 to circuit P34. Circuit P34 then supplies battery voltage to the power door lock motors to UNLOCK the doors.

When the power doors UNLOCK, ground for the motors is on circuit P2 through the normally closed contacts in the door lock relay to ground on circuit Z1.

DIAGRAM INDEX

Component	Page
Fuse 3 (PDC)	8W-61-2
Fuse 6 (Fuse Block)	8W-61-2
Liftgate Lock Motor	8W-61-3
Power Door Lock Motors	8W-61-3
Power Door Lock Relay	8W-61-2
Power Door Lock Switches	8W-61-2
Power Door Unlock Relay	8W-61-2

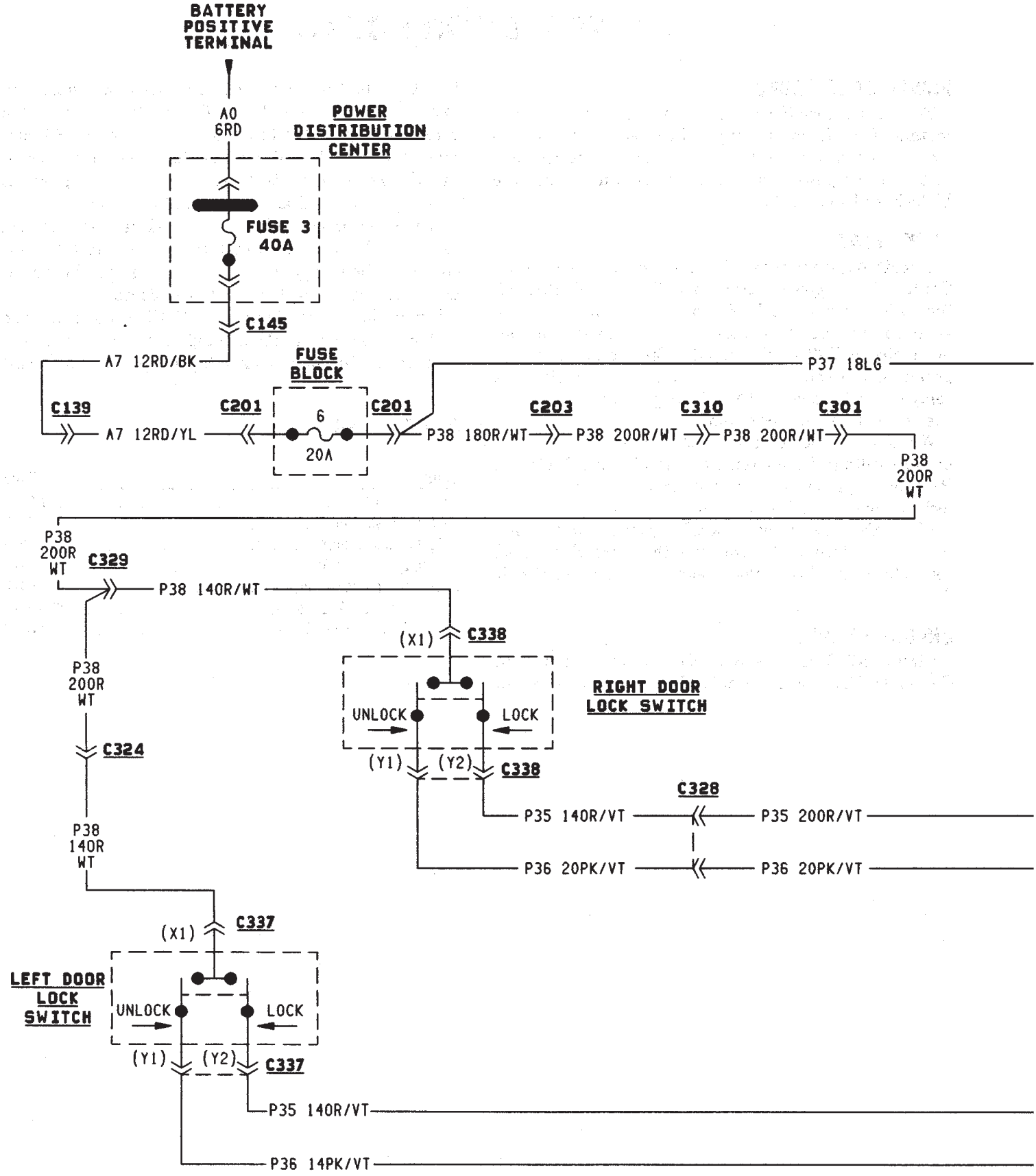
BATTERY POSITIVE TERMINAL
A0 6RD
POWER DISTRIBUTION CENTER
FUSE 3 40A
C145
A7 12RD/BK
FUSE BLOCK
P37 18LG
C139
C201
6
20A
C201
C203
C310
C301
A7 12RD/YL
P38 180R/WT
P38 200R/WT
P38 200R/WT
P38 200R WT
P38 200R WT
C329
P38 140R/WT
(X1)
C338
P38 200R WT
UNLOCK
LOCK
RIGHT DOOR LOCK SWITCH
C324
(Y1)
(Y2)
C338
C328
P35 140R/VT
P35 200R/VT
P38 140R WT
P36 20PK/VT
P36 20PK/VT
(X1)
C337
LEFT DOOR LOCK SWITCH
UNLOCK
LOCK
(Y1)
(Y2)
C337
P35 140R/VT
P36 14PK/VT

J958W-13

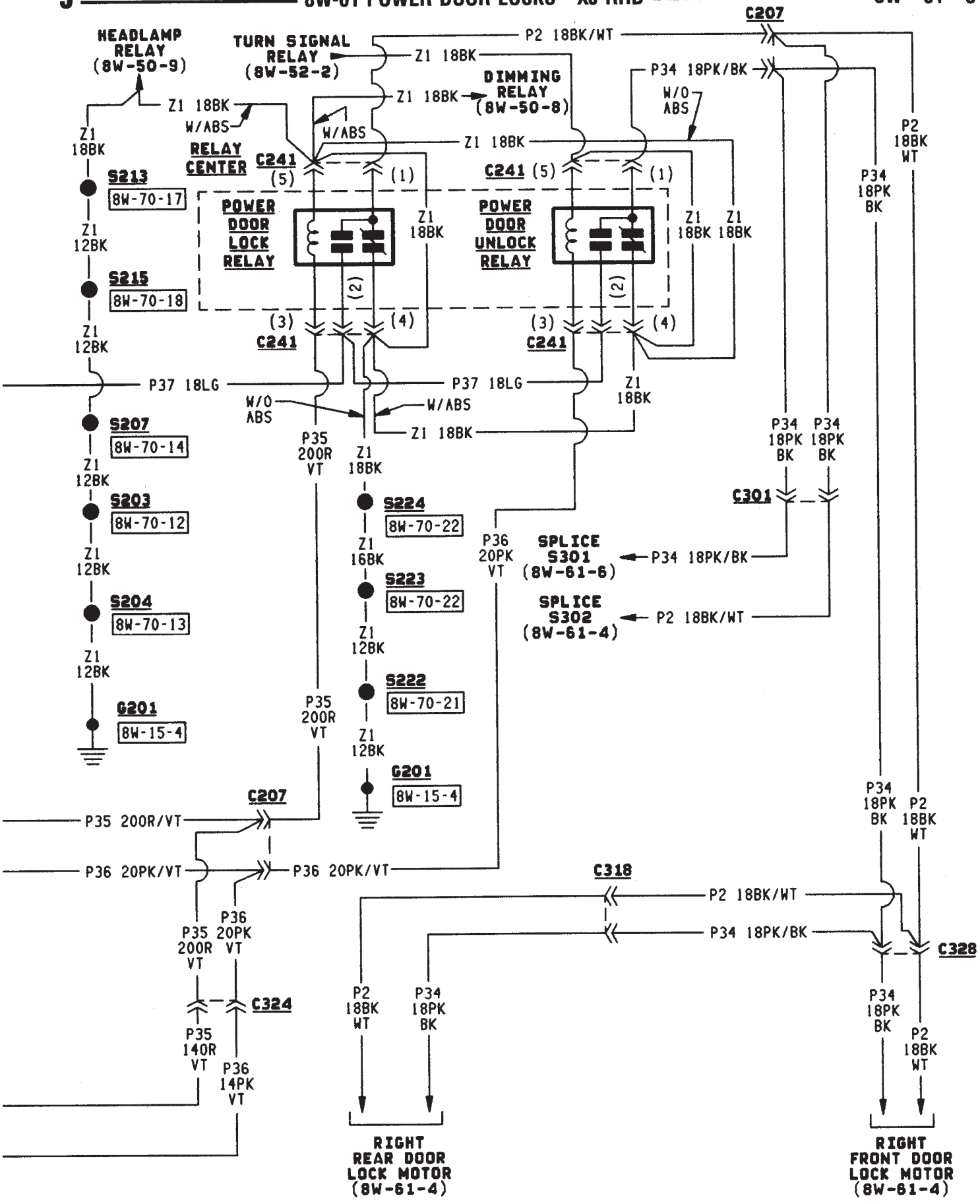
HEADLAMP RELAY (8W-50-9)
TURN SIGNAL RELAY (8W-52-2)
DIMMING RELAY (8W-50-8)
RELAY CENTER
C241
POWER DOOR LOCK RELAY
POWER DOOR UNLOCK RELAY
C207
C301
C318
C324
C328
S213
S215
S207
S203
S204
G201
S224
S223
S222
SPLICE S301 (8W-61-6)
SPLICE S302 (8W-61-4)
P2 18BK/WT
P34 18PK/BK
P37 18LG
P35 200R/VT
P36 20PK/VT
P35 200R VT
P36 20PK VT
P35 140R VT
P36 14PK VT
P2 18BK WT
P34 18PK BK
Z1 18BK
Z1 12BK
Z1 16BK
W/ABS
W/O ABS
RIGHT REAR DOOR LOCK MOTOR (8W-61-4)
RIGHT FRONT DOOR LOCK MOTOR (8W-61-4)
J958W-13

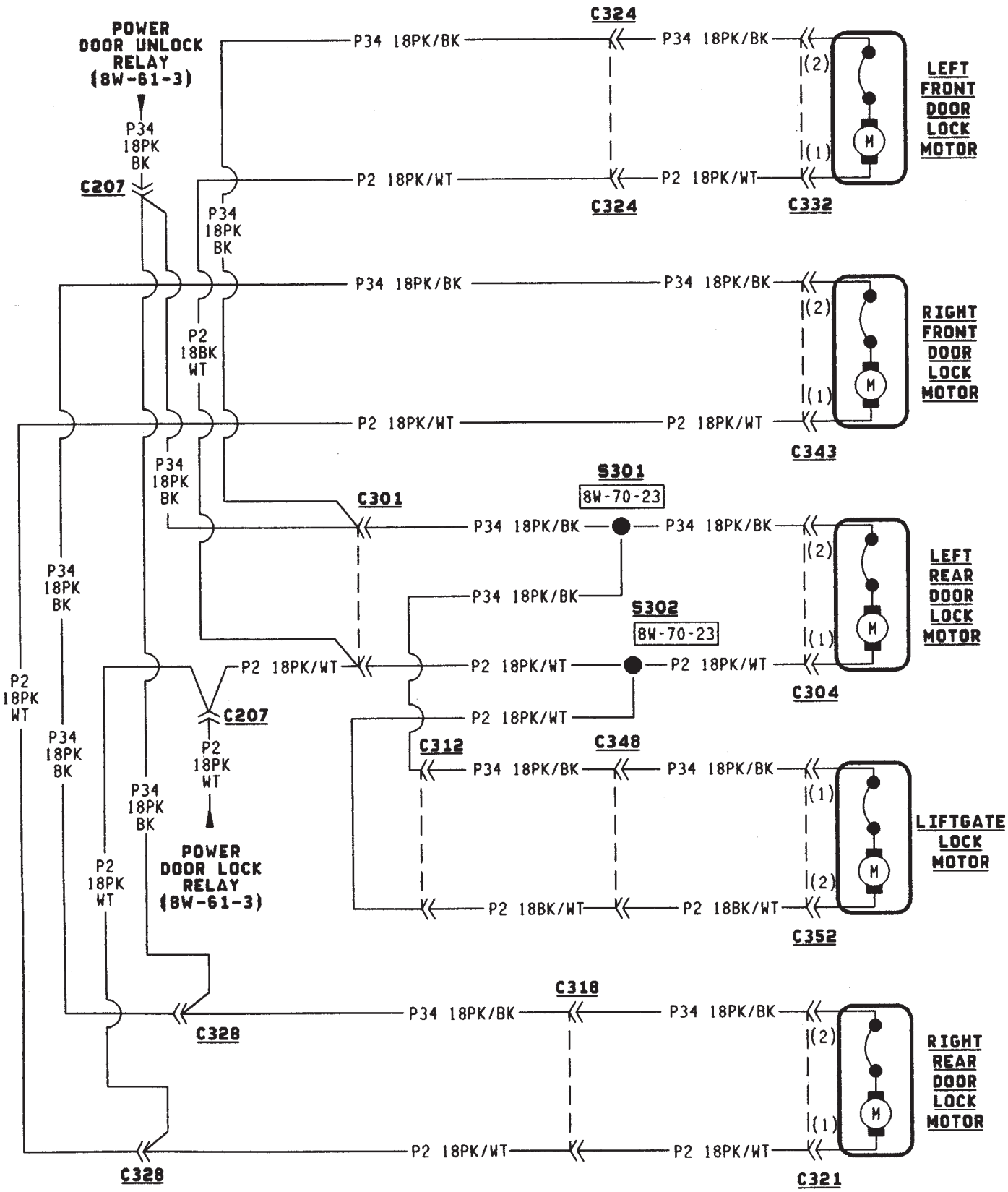
POWER DOOR UNLOCK RELAY (8W-61-3)
P34 18PK BK
C207
P34 18PK BK
P2 18BK WT
P34 18PK BK
P2 18PK WT
C207
P2 18PK WT
POWER DOOR LOCK RELAY (8W-61-3)
P34 18PK BK
P2 18PK WT
C328
C328
C324
P34 18PK/BK
P34 18PK/BK
P2 18PK/WT
P2 18PK/WT
C324
C332
LEFT FRONT DOOR LOCK MOTOR
P34 18PK/BK
P34 18PK/BK
RIGHT FRONT DOOR LOCK MOTOR
P2 18PK/WT
P2 18PK/WT
C343
C301
S301
8W-70-23
P34 18PK/BK
P34 18PK/BK
LEFT REAR DOOR LOCK MOTOR
P34 18PK/BK
S302
8W-70-23
P2 18PK/WT
P2 18PK/WT
P2 18PK/WT
C304
P2 18PK/WT
C312
C348
P34 18PK/BK
P34 18PK/BK
LIFTGATE LOCK MOTOR
P2 18BK/WT
P2 18BK/WT
C352
C318
P34 18PK/BK
P34 18PK/BK
RIGHT REAR DOOR LOCK MOTOR
P2 18PK/WT
P2 18PK/WT
C321
M
(1)
(2)

J958W-13

POWER MIRRORS

INDEX

page

Diagram Index 1
Heater Elements 1
Power Mirrors 1

POWER MIRRORS

Four switches operates the left and right power mirrors. One switch selects right or left mirror. Each mirror has two motors; a LEFT/RIGHT motor and a UP/DOWN motor. The motors switch polarity to allow mirror adjustment.

Circuit A7 from fuse 13 in the Power Distribution Center (PDC) supplies battery voltage to fuse 8 in the fuse block. Fuse 8 supplies voltage to circuit P60. Circuit P60 powers the power mirror switch. Circuit Z1 connects to the power mirror switch and supplies ground for the power mirror system.

RIGHT POWER MIRROR OPERATION

In the right position, the power mirror switch supplies power to the right mirror LEFT/RIGHT motor on circuit P79 when a rightward adjustment is made. Circuit P77 provides the ground path the for rightward adjustments.

When the operator makes leftward adjustment, polarity reverses. For leftward adjustments, the switch supplies battery voltage to the right mirror LEFT/RIGHT motor on circuit P77. Circuit P79 supplies ground for leftward adjustments.

During upward adjustments, the switch supplies voltage to the right mirror UP/DOWN motor on circuit P79. Circuit P80 supplies ground during upward adjustments.

For downward adjustments, the polarity is reversed, the switch powers the right mirror UP/DOWN motor on circuit P80. Circuit P79 supplies the ground path.

LEFT POWER MIRROR OPERATION

In the left position, the power mirror switch supplies power to the left mirror LEFT/RIGHT motor on circuit P79 when a rightward adjustment is made. Circuit P81 provides the ground path the for rightward adjustments.

When the operator makes leftward adjustment, polarity reverses. For leftward adjustments, the switch supplies battery voltage the left mirror LEFT/RIGHT motor on circuit P81. Circuit P79 supplies ground for leftward adjustments.

During upward adjustments, the switch supplies voltage to the left mirror UP/DOWN motor on circuit P79. Circuit P78 supplies ground during upward adjustments.

For downward adjustments, the polarity is reversed, the switch powers the left mirror UP/DOWN motor on circuit P78. Circuit P79 supplies the ground path.

HELPFUL INFORMATION

- Check fuse 3 in the PDC and fuse 8 in the fuse block in the PDC

HEATER ELEMENTS

The heated rear window relay powers the heater elements in power mirrors. When the relay energizes, it supplies power to the heater elements on circuit C15. Circuit Z1 provides ground for the power mirror heater elements.

HELPFUL INFORMATION

- Circuit F82 from fuse 2 in the fuse block powers circuit C15 when the heated rear window relay energizes.
- Circuit A4 from fuse 7 in the Power Distribution Center (PDC) supplies battery voltage to the fuse block for fuse 2 and circuit F85.
- Check fuse 2 in the fuse block.
- Check fuse 7 in the PDC.

DIAGRAM INDEX

Component	Page
Fuse 1 (Fuse Block)	8W-63-2
Fuse 3 (PDC)	8W-63-2
Power Seat	8W-63-2
Power Seat Switch	8W-63-2
Fuse 2 (Fuse Block)	8W-62-3
Fuse 3 (PDC)	8W-62-2
Fuse 7 (Fuse Block)	8W-62-2
Fuse 7 (PDC)	8W-62-3
Fuse 8 (Fuse Block)	8W-62-2
Fuse 16 (PDC)	8W-62-2
Heated Rear Window Relay	8W-62-3
Power Mirrors	8W-62-2
Power Mirror Heater Elements	8W-62-3
Power Mirror Switch	8W-62-2

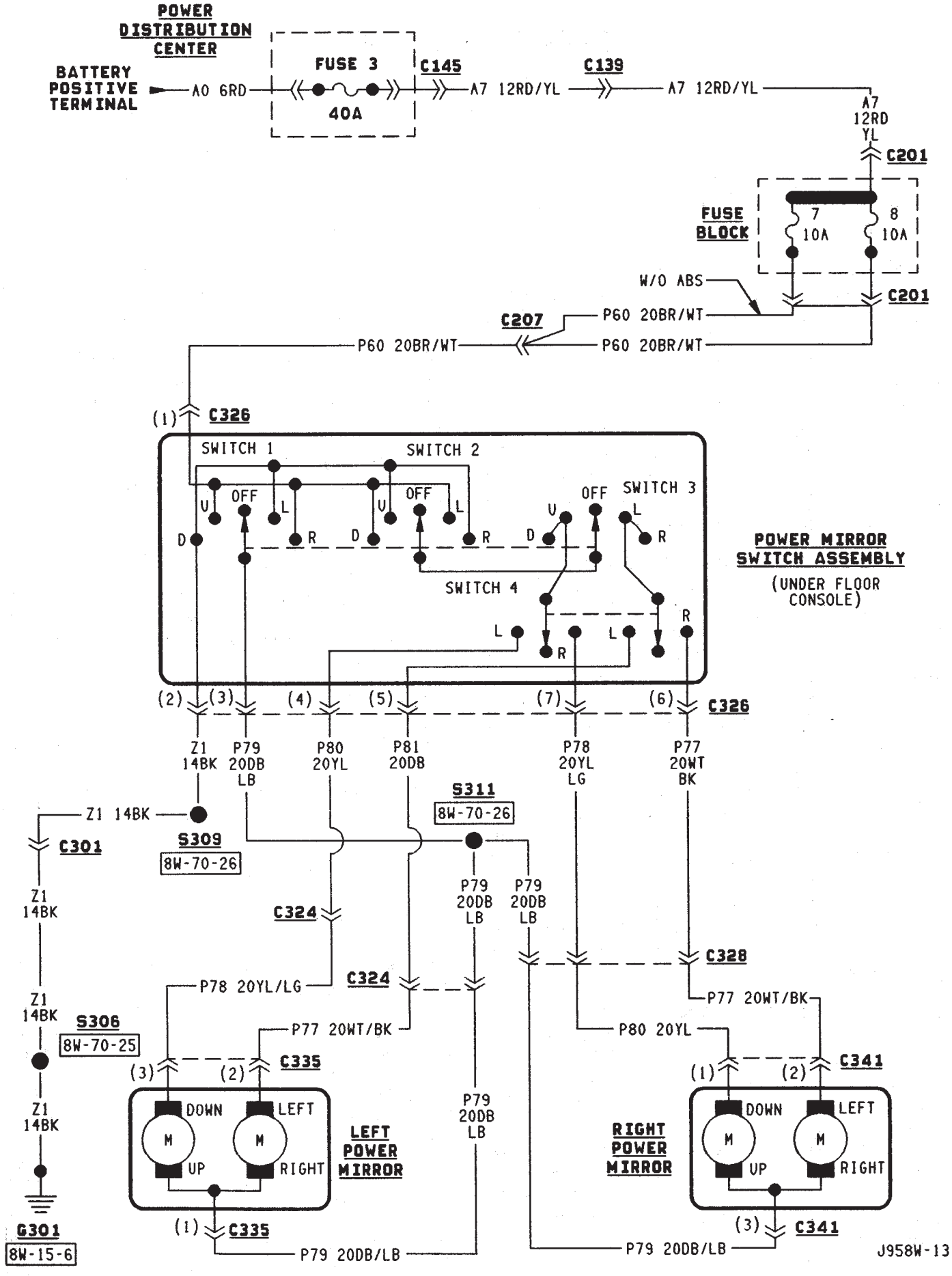
POWER DISTRIBUTION CENTER
BATTERY POSITIVE TERMINAL
A0 6RD
FUSE 3
40A
C145
A7 12RD/YL
C139
A7 12RD/YL
A7 12RD YL
C201
FUSE BLOCK
7 10A
8 10A
W/O ABS
C201
C207
P60 20BR/WT
P60 20BR/WT
P60 20BR/WT
(1) C326
SWITCH 1
SWITCH 2
SWITCH 3
SWITCH 4
U
OFF
L
D
R
POWER MIRROR SWITCH ASSEMBLY
(UNDER FLOOR CONSOLE)
(2) (3) (4) (5) (7) (6) C326
Z1 14BK
P79 20DB LB
P80 20YL
P81 20DB
P78 20YL LG
P77 20WT BK
Z1 14BK
S309
8W-70-26
S311
8W-70-26
C301
Z1 14BK
C324
P79 20DB LB
P79 20DB LB
C328
P78 20YL/LG
C324
P77 20WT/BK
Z1 14BK
S306
8W-70-25
P77 20WT/BK
P80 20YL
(3) (2) C335
(1) (2) C341
Z1 14BK
DOWN
LEFT
M
UP
RIGHT
LEFT POWER MIRROR
P79 20DB LB
RIGHT POWER MIRROR
G301
8W-15-6
(1) C335
P79 20DB/LB
(3) C341
P79 20DB/LB
J958W-13

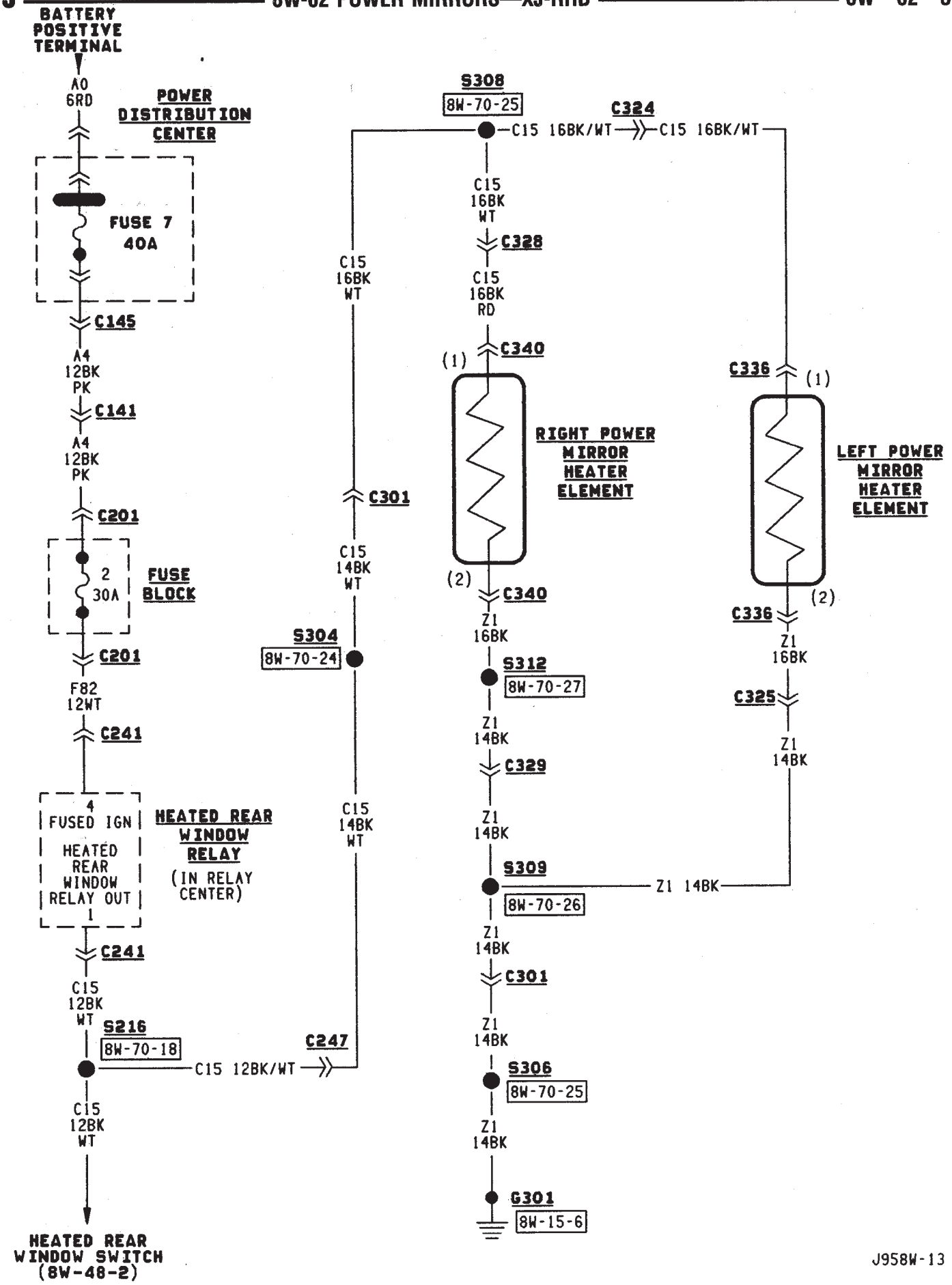
BATTERY POSITIVE TERMINAL
A0 6RD
POWER DISTRIBUTION CENTER
FUSE 7 40A
C145
A4 12BK PK
C141
A4 12BK PK
C201
2 30A
FUSE BLOCK
C201
F82 12WT
C241
4 FUSED IGN
HEATED REAR WINDOW RELAY OUT
1
HEATED REAR WINDOW RELAY
(IN RELAY CENTER)
C241
C15 12BK WT
S216
8W-70-18
C15 12BK/WT
C15 12BK WT
HEATED REAR WINDOW SWITCH (8W-48-2)
C247
C15 14BK WT
S304
8W-70-24
C15 14BK WT
C301
C15 16BK WT
S308
8W-70-25
C15 16BK/WT
C324
C15 16BK/WT
C15 16BK WT
C328
C15 16BK RD
C340
(1)
RIGHT POWER MIRROR HEATER ELEMENT
(2)
C340
Z1 16BK
S312
8W-70-27
Z1 14BK
C329
Z1 14BK
S309
8W-70-26
Z1 14BK
C301
Z1 14BK
S306
8W-70-25
Z1 14BK
G301
8W-15-6
C336
(1)
LEFT POWER MIRROR HEATER ELEMENT
(2)
C336
Z1 16BK
C325
Z1 14BK
Z1 14BK

J958W-13

POWER SEAT

POWER SEAT

Battery voltage for the power seat system is supplied by circuit A11 from fuse 1 in the fuse block. Circuit A11 is HOT at all times and supplies battery voltage to the power seat switch.

A BUS bar internal to the power seat switch connects the power from circuit A11 to the switches. Grounding for the seat system is supplied on circuit Z1.

The motors located under the seat are protected by circuit breakers wired in with the motors. Each motor has its own circuit breaker.

When the operator selects the FRONT VERTICAL UP function, power is passed on the A11 circuit through the closed contacts in the switch to the S5 circuit. The S5 circuit connects to the motor. Ground is provided on the S6 circuit back to the switch. A ground BUS bar internal to the switch then connects to the Z1 circuit.

For FRONT VERTICAL DOWN function the circuits are reversed. S6 is the feed and S5 is the ground.

When the operator selects the SEAT FORWARD function, power is passed on the A11 circuit through the closed contacts in the switch to the S3 circuit. The S3 circuit connects to the motor. Ground is provided on the S4 circuit back to the switch. A ground BUS bar internal to the switch then connects to the Z1 circuit.

For SEAT REARWARD function the circuits are reversed. S4 is the feed and S3 is the ground.

When the operator selects the REAR VERTICAL UP function, power is passed on the A11 circuit through the closed contacts in the switch to the S1 circuit. The S1 circuit connects to the motor. Ground is provided on the S2 circuit back to the switch. A ground BUS bar internal to the switch then connects to the Z1 circuit.

For REAR VERTICAL DOWN function the circuits are reversed. S2 is the feed and S1 is the ground.

When the operator selects the SEAT UP function power is passed on the A11 circuit through the closed contacts in the switch to the S1 and S5 circuits. The S1 circuit connects to the rear UP/DOWN motor, and S5 connects to the front UP/DOWN motor. Ground is provided on the S2 and S6 circuits back to the switch. A ground BUS bar internal to the switch then connects to the Z1 circuit.

For SEAT DOWN function the circuits are reversed. S2 and S6 circuits are the feeds and S1 and S5 are the grounds.

DIAGRAM INDEX

Component	Page
Fuse 1 (Fuse Block)	8W-63-2
Fuse 3 (PDC)	8W-63-2
Power Seat	8W-63-2
Power Seat Switch	8W-63-2

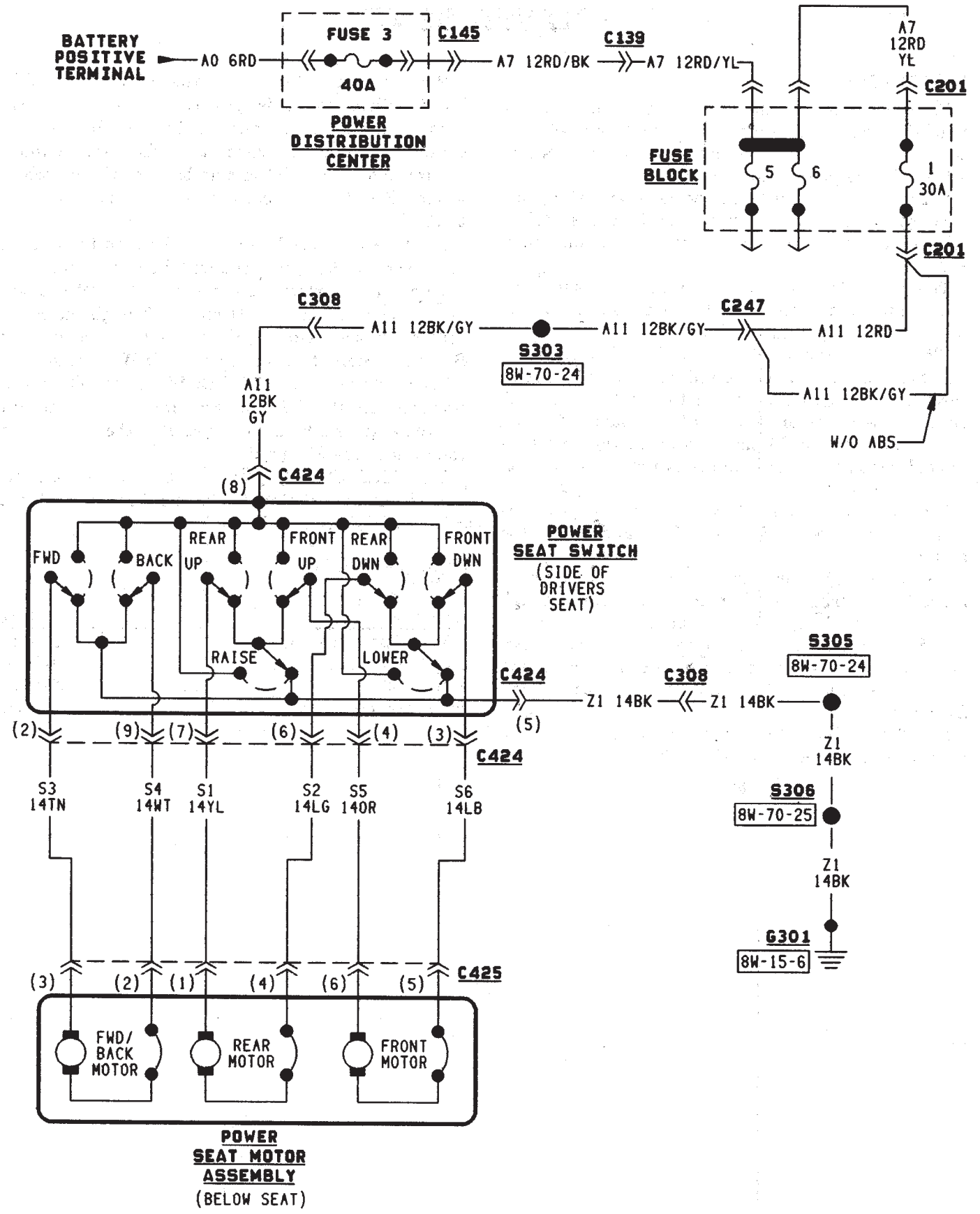
BATTERY POSITIVE TERMINAL
A0 6RD
FUSE 3
40A
C145
POWER DISTRIBUTION CENTER
C139
A7 12RD/BK
A7 12RD/YL
A7 12RD YL
C201
FUSE BLOCK
5
6
1 30A
C201
C308
A11 12BK/GY
S303
8W-70-24
A11 12BK/GY
C247
A11 12RD
A11 12BK/GY
W/O ABS
A11 12BK GY
C424
(8)
FWD
BACK
REAR UP
FRONT UP
REAR DWN
FRONT DWN
RAISE
LOWER
POWER SEAT SWITCH
(SIDE OF DRIVERS SEAT)
C424
(5)
Z1 14BK
C308
Z1 14BK
S305
8W-70-24
Z1 14BK
S306
8W-70-25
Z1 14BK
G301
8W-15-6
(2)
(9)
(7)
(6)
(4)
(3)
C424
S3 14TN
S4 14WT
S1 14YL
S2 14LG
S5 14OR
S6 14LB
(3)
(2)
(1)
(4)
(6)
(5)
C425
FWD/ BACK MOTOR
REAR MOTOR
FRONT MOTOR
POWER SEAT MOTOR ASSEMBLY
(BELOW SEAT)

J958W-13

SPLICE INFORMATION

GENERAL INFORMATION

This section identifies all splices in the wiring diagrams. It also shows the splices in their entirety. All circuits that are part of the splices are shown, and the systems they affect are referenced. For viewing the location of each splice in the vehicle, refer to Section 8W-95.

SPLICE INDEX

Component	Page
S101	8W-70-2
S102	8W-70-2
S103	8W-70-3
S104	8W-70-3
S105	8W-70-3
S106	8W-70-4
S107	8W-70-4
S108	8W-70-4
S109	8W-70-5
S110	8W-70-5
S111	8W-70-5
S112	8W-70-6
S113	8W-70-6
S114	8W-70-7
S115	8W-70-7
S116	8W-70-8
S117	8W-70-8
S118	8W-70-8
S119	8W-70-9
S120	8W-70-9
S121	8W-70-9
S122	8W-70-10
S123	8W-70-10
S124	8W-70-10
S125	8W-70-10
S126	8W-70-11
S127	8W-70-11
S201	8W-70-12
S202	8W-70-12
S203	8W-70-12
S204	8W-70-13
S205	8W-70-13
S206	8W-70-13
S207	8W-70-14
S208	8W-70-14
S209	8W-70-15
S210	8W-70-15
S211	8W-70-16
S212	8W-70-16
S213	8W-70-17
S214	8W-70-17
S215	8W-70-18
S216	8W-70-18
S217	8W-70-18
S218	8W-70-19
S219	8W-70-19
S220	8W-70-20
S221	8W-70-20
S222	8W-70-21
S223	8W-70-22
S224	8W-70-22
S301	8W-70-23
S302	8W-70-23
S303	8W-70-24
S304	8W-70-24
S305	8W-70-24
S306	8W-70-25
S307	8W-70-25
S308	8W-70-25
S309	8W-70-26
S310	8W-70-26
S311	8W-70-26
S312	8W-70-27
S313	8W-70-27
S314	8W-70-27
S315	8W-70-28
S316	8W-70-28
S401	8W-70-29
S402	8W-70-29
S403	8W-70-30
S404	8W-70-30

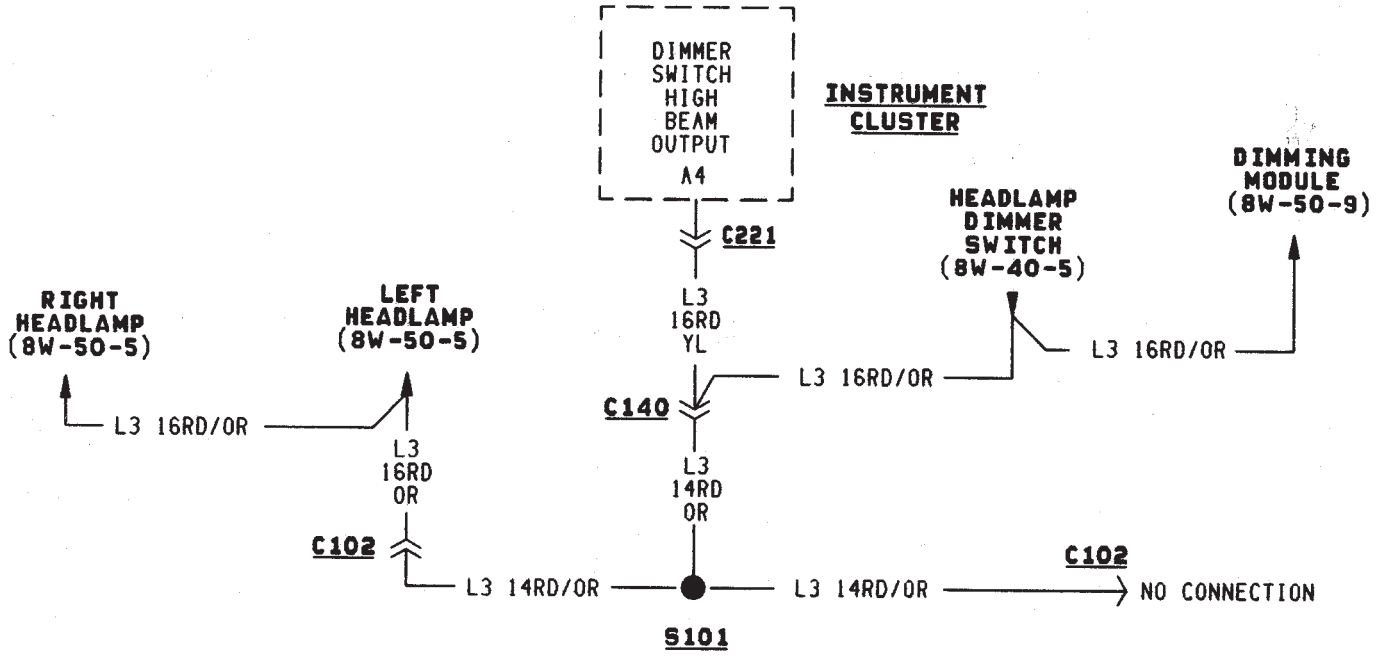
DIMMER SWITCH HIGH BEAM OUTPUT A4
INSTRUMENT CLUSTER
C221
L3 16RD YL
HEADLAMP DIMMER SWITCH (8W-40-5)
DIMMING MODULE (8W-50-9)
L3 16RD/OR
RIGHT HEADLAMP (8W-50-5)
LEFT HEADLAMP (8W-50-5)
L3 16RD/OR
C140
L3 16RD/OR
L3 16RD OR
L3 14RD OR
C102
L3 14RD/OR
L3 14RD/OR
C102
NO CONNECTION
S101

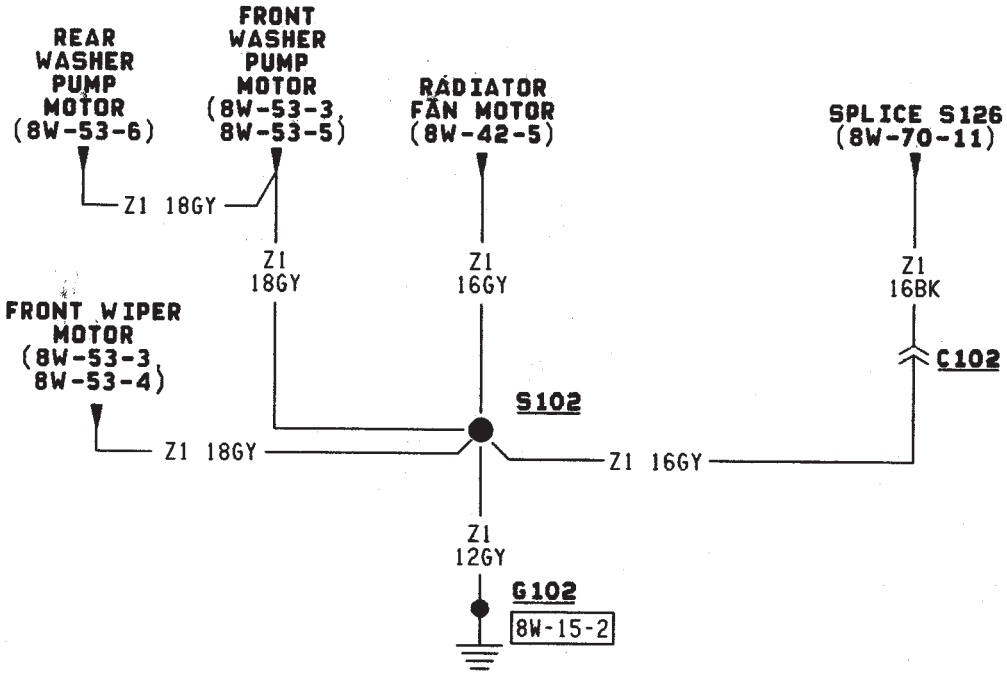
REAR WASHER PUMP MOTOR (8W-53-6)
FRONT WASHER PUMP MOTOR (8W-53-3, 8W-53-5)
RADIATOR FAN MOTOR (8W-42-5)
SPLICE S126 (8W-70-11)
Z1 18GY
Z1 18GY
Z1 16GY
Z1 16BK
C102
FRONT WIPER MOTOR (8W-53-3, 8W-53-4)
S102
Z1 18GY
Z1 16GY
Z1 12GY
G102
8W-15-2

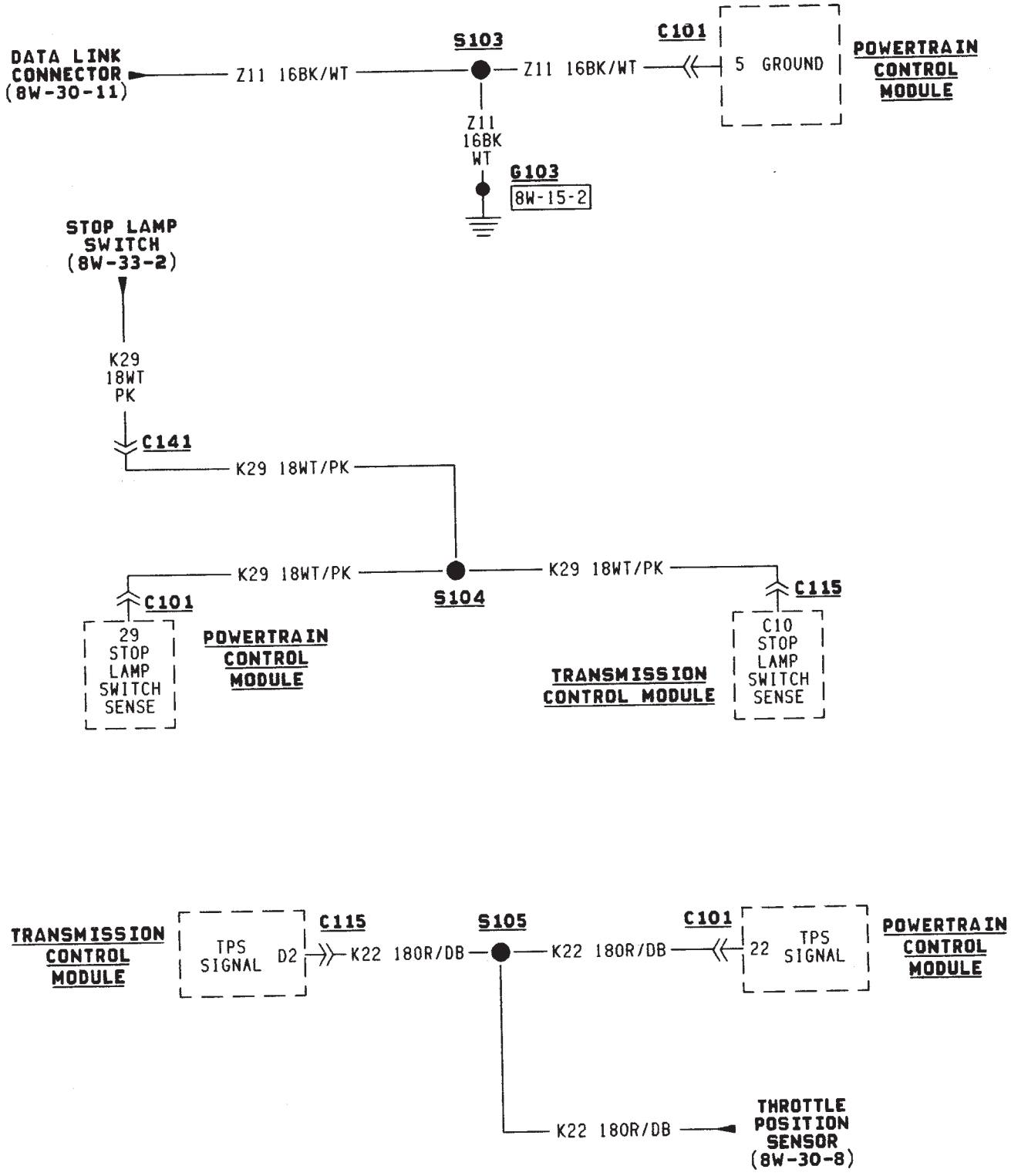
DATA LINK CONNECTOR (8W-30-11)
Z11 16BK/WT
S103
Z11 16BK/WT
C101
5 GROUND
POWERTRAIN CONTROL MODULE
Z11 16BK WT
G103
8W-15-2
STOP LAMP SWITCH (8W-33-2)
K29 18WT PK
C141
K29 18WT/PK
K29 18WT/PK
S104
K29 18WT/PK
C101
29 STOP LAMP SWITCH SENSE
POWERTRAIN CONTROL MODULE
C115
C10 STOP LAMP SWITCH SENSE
TRANSMISSION CONTROL MODULE
TRANSMISSION CONTROL MODULE
TPS SIGNAL D2
C115
K22 180R/DB
S105
K22 180R/DB
C101
22 TPS SIGNAL
POWERTRAIN CONTROL MODULE
K22 180R/DB
THROTTLE POSITION SENSOR (8W-30-8)

J958W-13

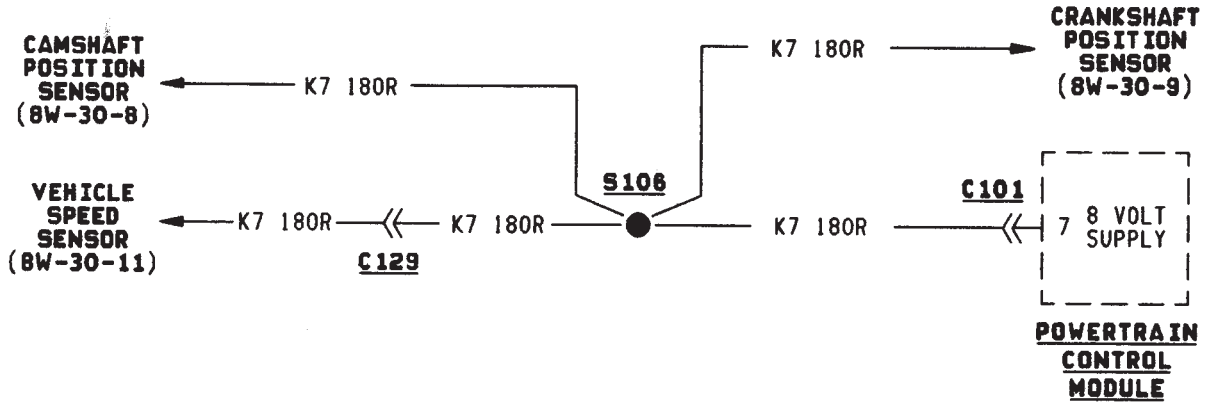
CAMSHAFT POSITION SENSOR (8W-30-8)
K7 180R
K7 180R
CRANKSHAFT POSITION SENSOR (8W-30-9)
VEHICLE SPEED SENSOR (8W-30-11)
K7 180R
K7 180R
C129
S106
K7 180R
C101
7 8 VOLT SUPPLY
POWERTRAIN CONTROL MODULE

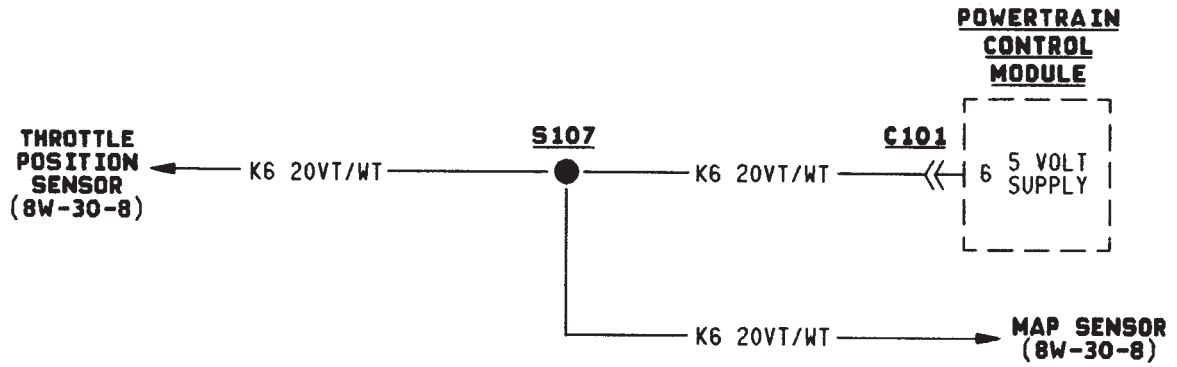
POWERTRAIN CONTROL MODULE
THROTTLE POSITION SENSOR (8W-30-8)
K6 20VT/WT
S107
K6 20VT/WT
C101
6 5 VOLT SUPPLY
K6 20VT/WT
MAP SENSOR (8W-30-8)

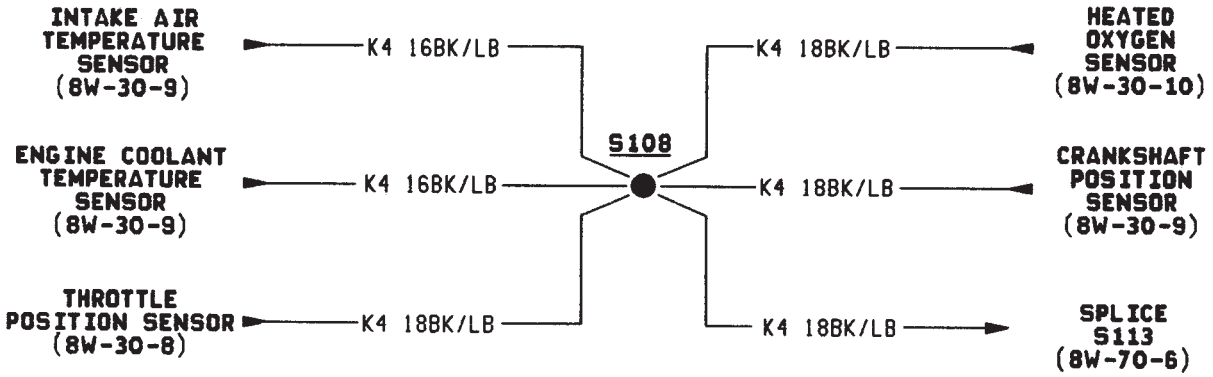
INTAKE AIR TEMPERATURE SENSOR (8W-30-9)
K4 16BK/LB
K4 18BK/LB
HEATED OXYGEN SENSOR (8W-30-10)
S108
ENGINE COOLANT TEMPERATURE SENSOR (8W-30-9)
K4 16BK/LB
K4 18BK/LB
CRANKSHAFT POSITION SENSOR (8W-30-9)
THROTTLE POSITION SENSOR (8W-30-8)
K4 18BK/LB
K4 18BK/LB
SPLICE S113 (8W-70-6)

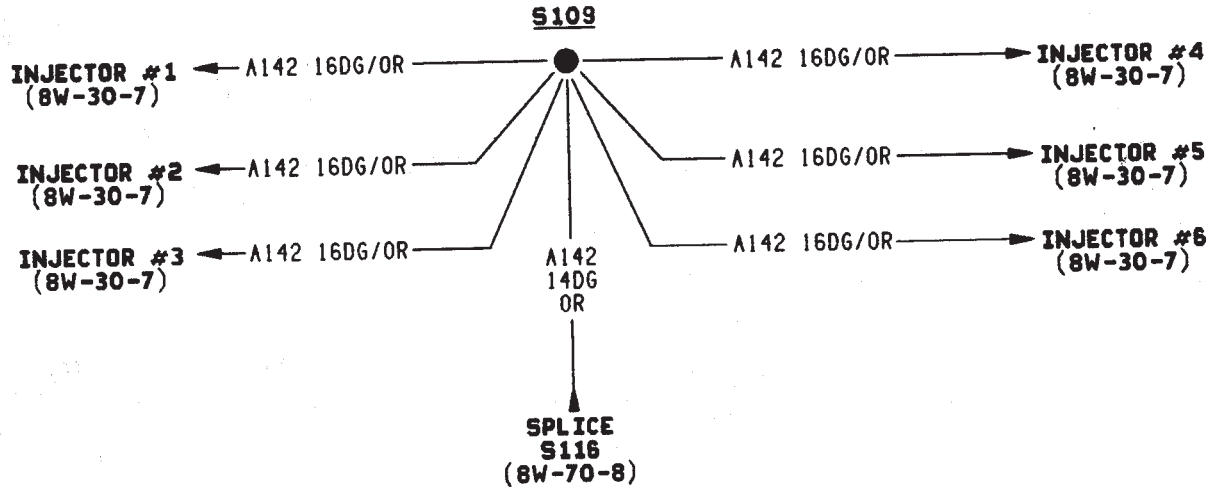
S109
INJECTOR #1 (8W-30-7)
A142 16DG/OR
INJECTOR #2 (8W-30-7)
A142 16DG/OR
INJECTOR #3 (8W-30-7)
A142 16DG/OR
A142 16DG/OR
INJECTOR #4 (8W-30-7)
A142 16DG/OR
INJECTOR #5 (8W-30-7)
A142 16DG/OR
INJECTOR #6 (8W-30-7)
A142 14DG OR
SPLICE S116 (8W-70-8)

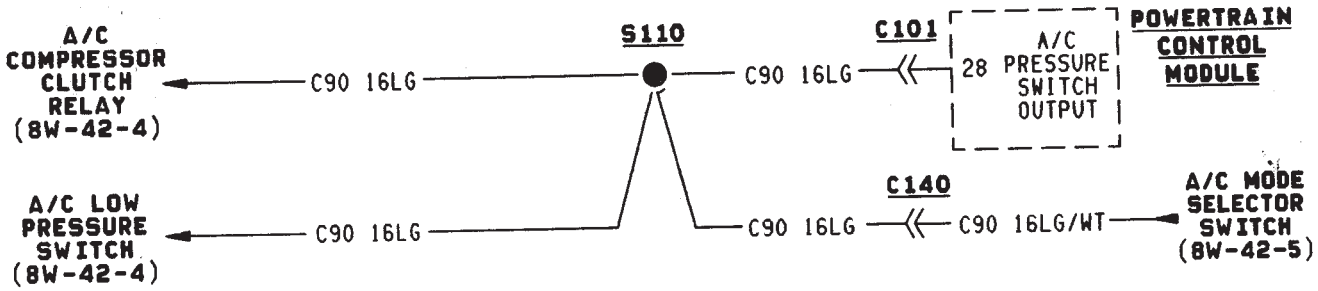
A/C COMPRESSOR CLUTCH RELAY (8W-42-4)
C90 16LG
S110
C90 16LG
C101
28 A/C PRESSURE SWITCH OUTPUT
POWERTRAIN CONTROL MODULE
A/C LOW PRESSURE SWITCH (8W-42-4)
C90 16LG
C90 16LG
C140
C90 16LG/WT
A/C MODE SELECTOR SWITCH (8W-42-5)

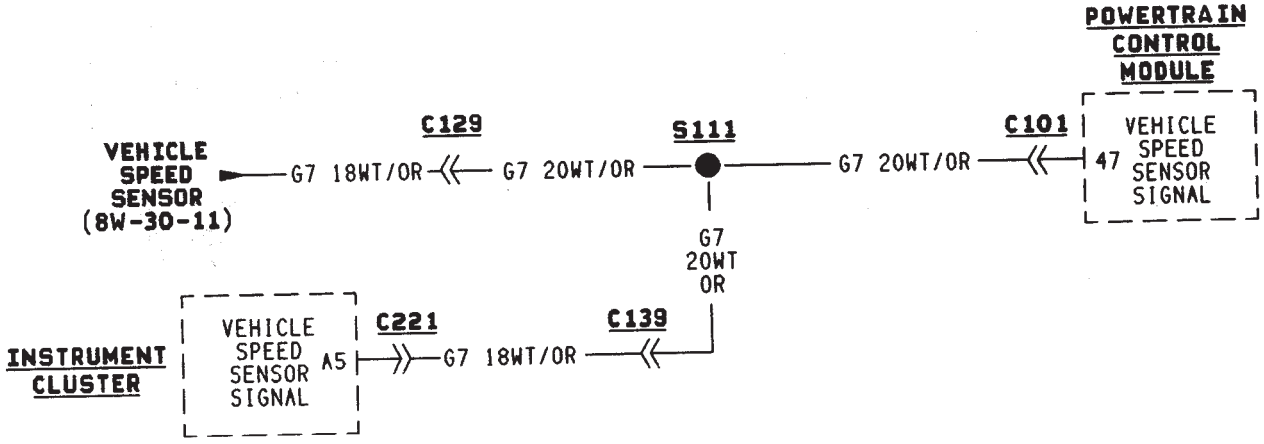
POWERTRAIN CONTROL MODULE
VEHICLE SPEED SENSOR (8W-30-11)
C129
G7 18WT/OR
G7 20WT/OR
S111
G7 20WT/OR
C101
47 VEHICLE SPEED SENSOR SIGNAL
G7 20WT OR
INSTRUMENT CLUSTER
VEHICLE SPEED SENSOR SIGNAL
A5
C221
G7 18WT/OR
C139

J958W-13

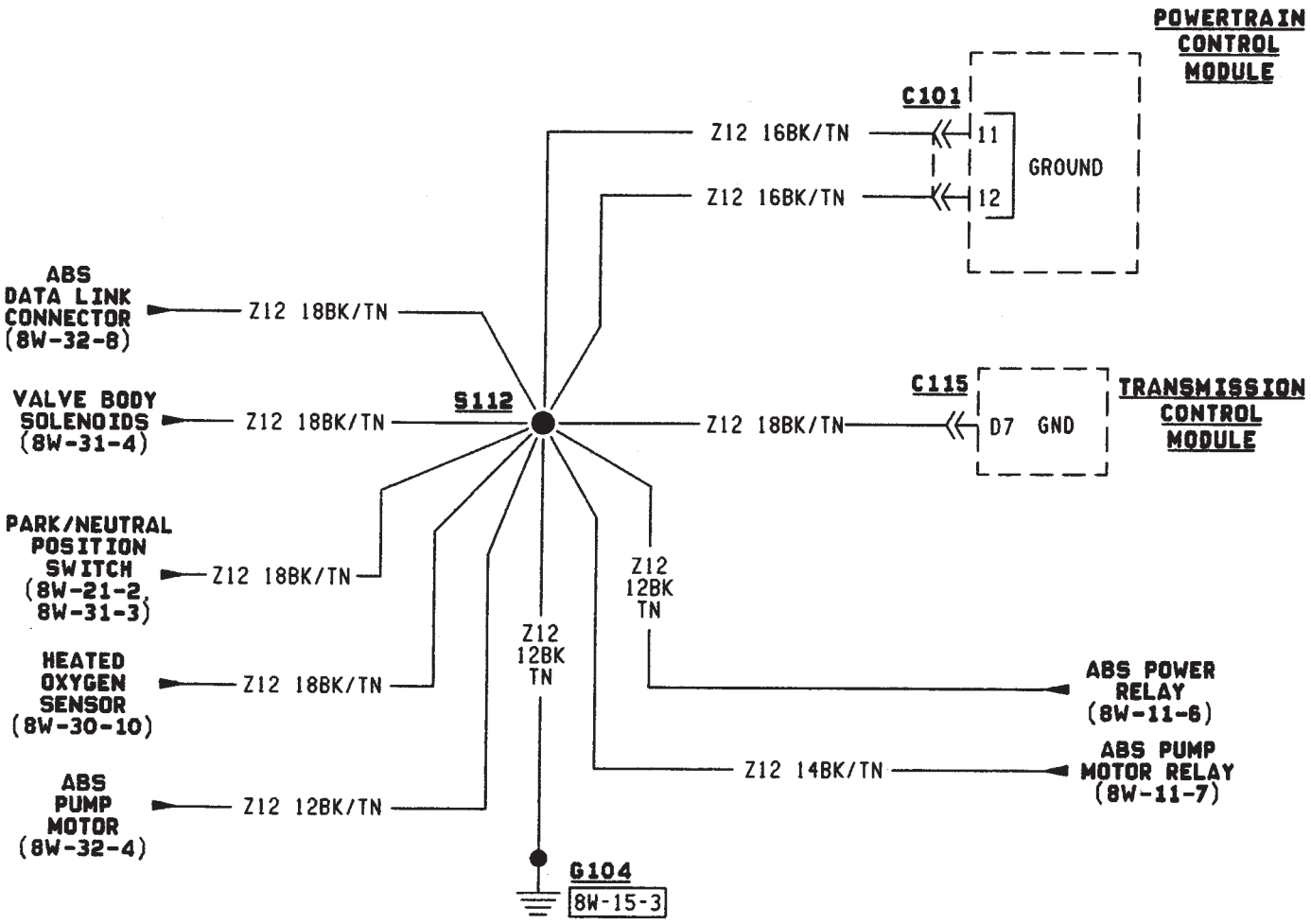
POWERTRAIN CONTROL MODULE
C101
Z12 16BK/TN
11
GROUND
Z12 16BK/TN
12
ABS DATA LINK CONNECTOR (8W-32-8)
Z12 18BK/TN
VALVE BODY SOLENOIDS (8W-31-4)
Z12 18BK/TN
S112
C115
D7 GND
TRANSMISSION CONTROL MODULE
Z12 18BK/TN
PARK/NEUTRAL POSITION SWITCH (8W-21-2, 8W-31-3)
Z12 18BK/TN
HEATED OXYGEN SENSOR (8W-30-10)
Z12 18BK/TN
ABS PUMP MOTOR (8W-32-4)
Z12 12BK/TN
Z12 12BK TN
Z12 12BK TN
ABS POWER RELAY (8W-11-6)
Z12 14BK/TN
ABS PUMP MOTOR RELAY (8W-11-7)
G104
8W-15-3

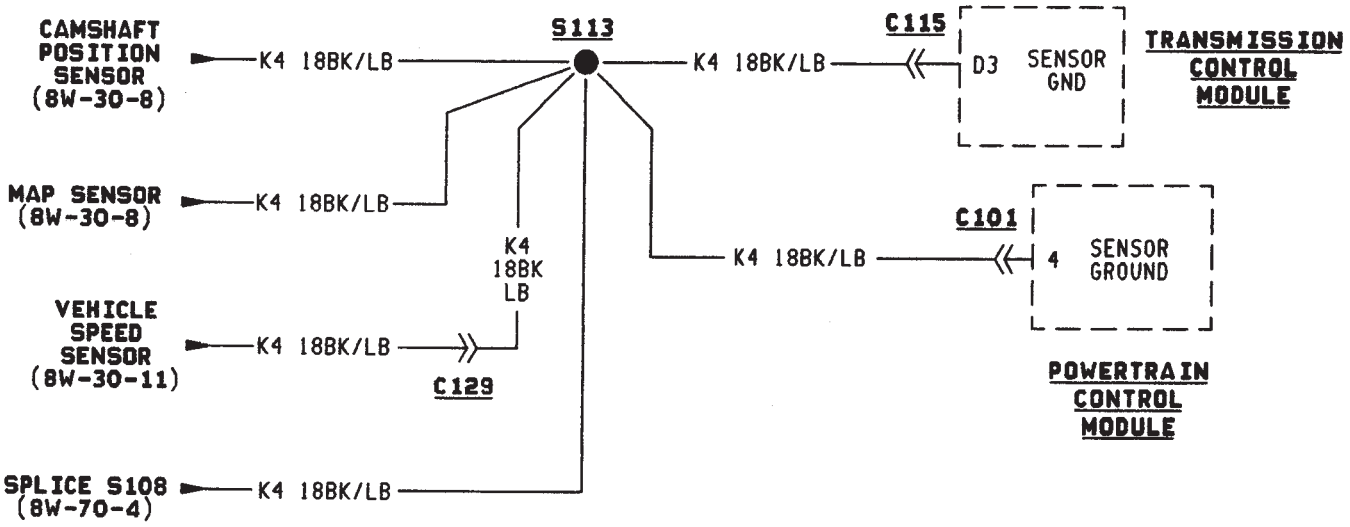
CAMSHAFT POSITION SENSOR (8W-30-8)
K4 18BK/LB
S113
K4 18BK/LB
C115
D3 SENSOR GND
TRANSMISSION CONTROL MODULE
MAP SENSOR (8W-30-8)
K4 18BK/LB
K4 18BK LB
C101
4 SENSOR GROUND
K4 18BK/LB
VEHICLE SPEED SENSOR (8W-30-11)
K4 18BK/LB
C129
POWERTRAIN CONTROL MODULE
SPLICE S108 (8W-70-4)
K4 18BK/LB

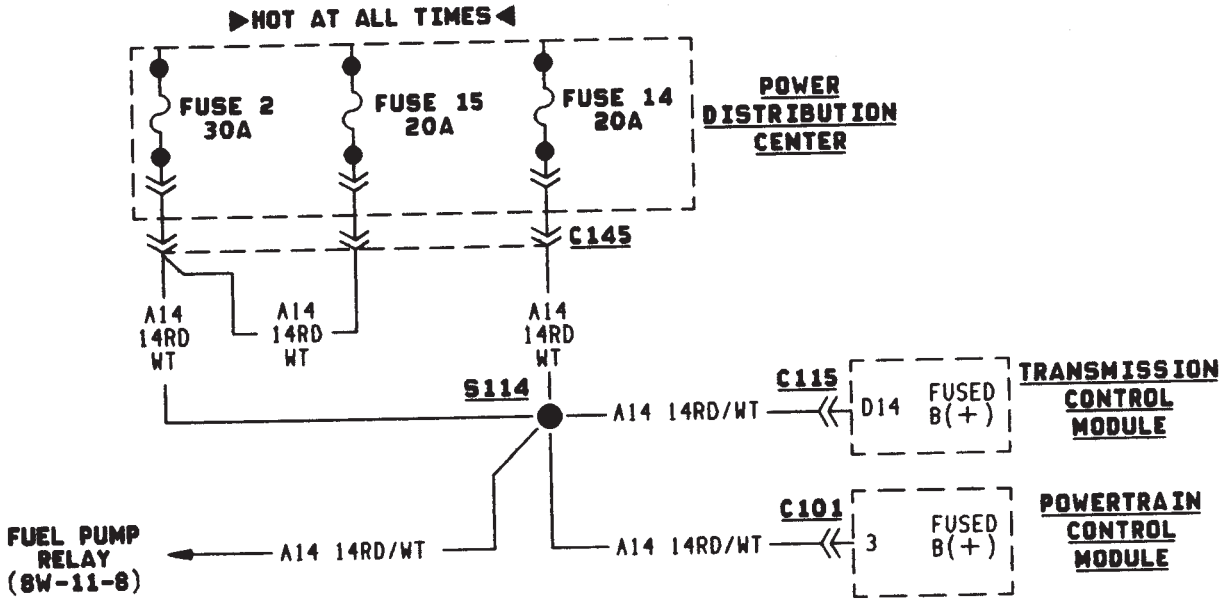
▶HOT AT ALL TIMES◀
FUSE 2
30A
FUSE 15
20A
FUSE 14
20A
POWER
DISTRIBUTION
CENTER
C145
A14
14RD
WT
A14
14RD
WT
A14
14RD
WT
S114
C115
D14
FUSED
B(+)
TRANSMISSION
CONTROL
MODULE
A14 14RD/WT
FUEL PUMP
RELAY
(8W-11-8)
A14 14RD/WT
A14 14RD/WT
C101
3
FUSED
B(+)
POWERTRAIN
CONTROL
MODULE

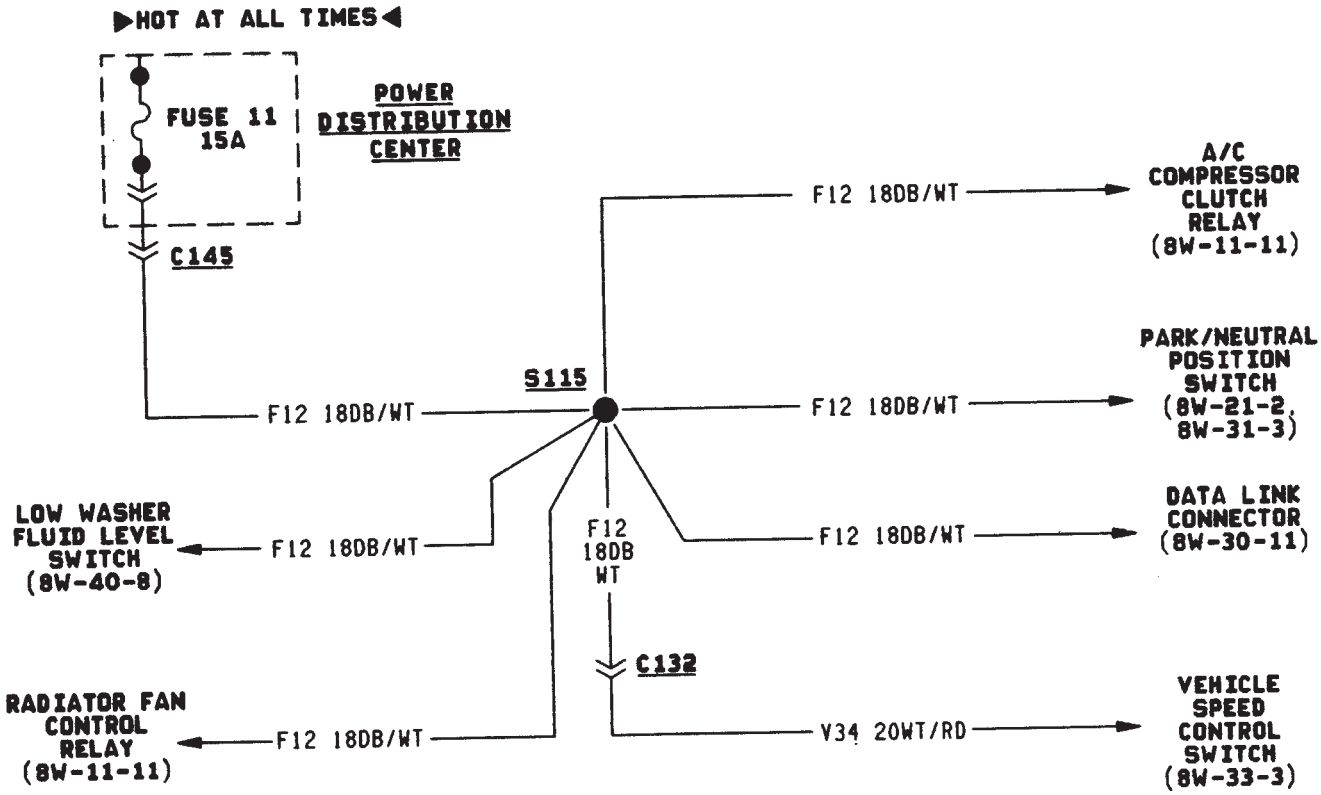
▶HOT AT ALL TIMES◀
FUSE 11
15A
POWER
DISTRIBUTION
CENTER
C145
F12 18DB/WT
A/C
COMPRESSOR
CLUTCH
RELAY
(8W-11-11)
S115
F12 18DB/WT
F12 18DB/WT
PARK/NEUTRAL
POSITION
SWITCH
(8W-21-2,
8W-31-3)
LOW WASHER
FLUID LEVEL
SWITCH
(8W-40-8)
F12 18DB/WT
F12
18DB
WT
F12 18DB/WT
DATA LINK
CONNECTOR
(8W-30-11)
C132
RADIATOR FAN
CONTROL
RELAY
(8W-11-11)
F12 18DB/WT
V34 20WT/RD
VEHICLE
SPEED
CONTROL
SWITCH
(8W-33-3)

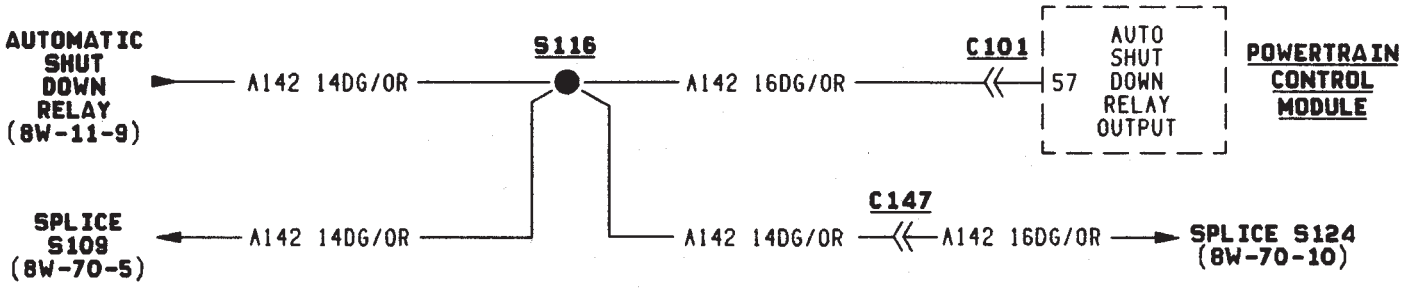
AUTOMATIC SHUT DOWN RELAY (8W-11-9)
A142 14DG/OR
S116
A142 16DG/OR
C101
57
AUTO SHUT DOWN RELAY OUTPUT
POWERTRAIN CONTROL MODULE
SPLICE S109 (8W-70-5)
A142 14DG/OR
C147
A142 14DG/OR
A142 16DG/OR
SPLICE S124 (8W-70-10)

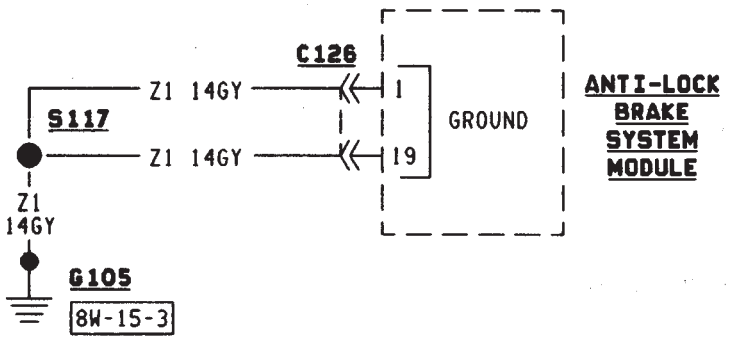
C126
Z1 14GY
1
GROUND
ANTI-LOCK BRAKE SYSTEM MODULE
S117
Z1 14GY
19
Z1 14GY
G105
8W-15-3

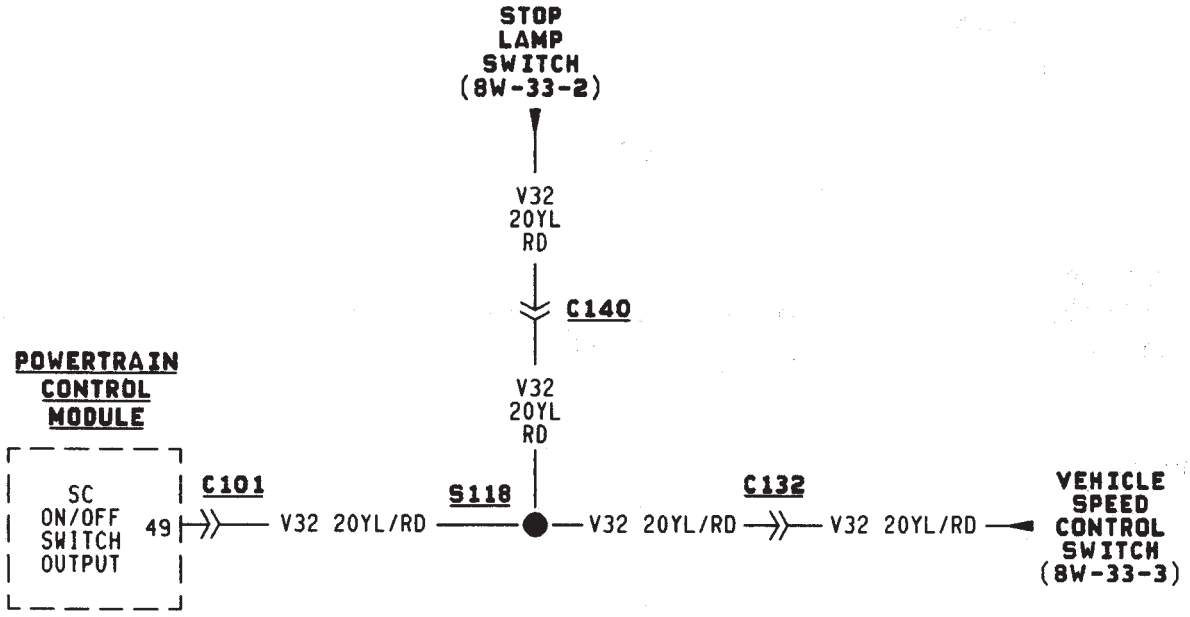
STOP LAMP SWITCH (8W-33-2)
V32 20YL RD
C140
V32 20YL RD
POWERTRAIN CONTROL MODULE
SC ON/OFF SWITCH OUTPUT
49
C101
V32 20YL/RD
S118
V32 20YL/RD
C132
V32 20YL/RD
VEHICLE SPEED CONTROL SWITCH (8W-33-3)

J958W-13

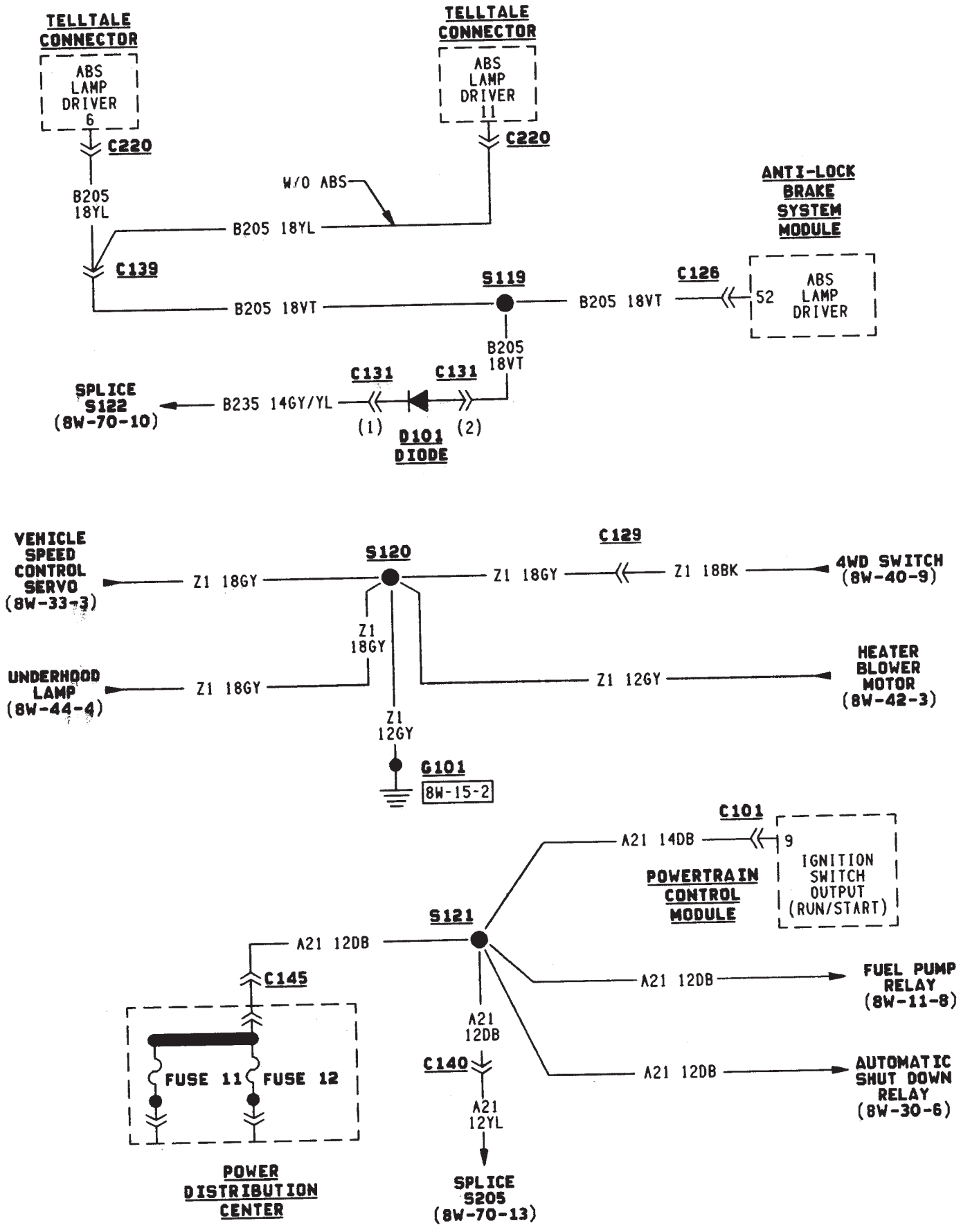
TELLTALE CONNECTOR
ABS LAMP DRIVER 6
C220
B205 18YL
C139
B205 18VT
W/O ABS
TELLTALE CONNECTOR
ABS LAMP DRIVER 11
C220
B205 18YL
ANTI-LOCK BRAKE SYSTEM MODULE
C126
52 ABS LAMP DRIVER
S119
B205 18VT
B205 18VT
C131
C131
SPLICE S122 (8W-70-10)
B235 14GY/YL
(1)
D101 DIODE
(2)
VEHICLE SPEED CONTROL SERVO (8W-33-3)
Z1 18GY
S120
Z1 18GY
C129
Z1 18BK
4WD SWITCH (8W-40-9)
Z1 18GY
UNDERHOOD LAMP (8W-44-4)
Z1 18GY
Z1 12GY
HEATER BLOWER MOTOR (8W-42-3)
Z1 12GY
G101
8W-15-2
C101
A21 14DB
9
IGNITION SWITCH OUTPUT (RUN/START)
POWERTRAIN CONTROL MODULE
S121
A21 12DB
C145
FUSE 11
FUSE 12
POWER DISTRIBUTION CENTER
A21 12DB
FUEL PUMP RELAY (8W-11-8)
A21 12DB
C140
A21 12YL
SPLICE S205 (8W-70-13)
A21 12DB
AUTOMATIC SHUT DOWN RELAY (8W-30-6)

J958W-13

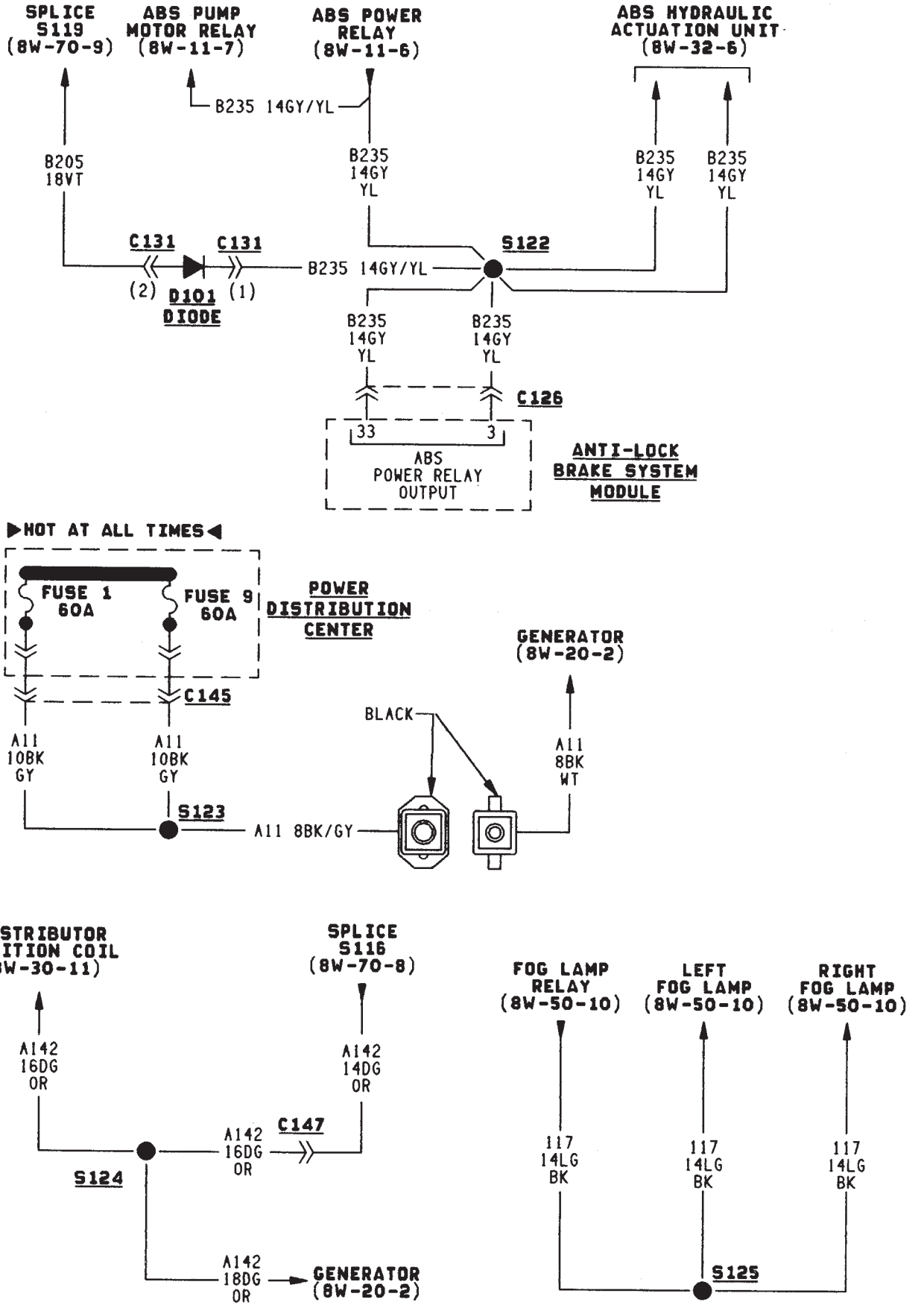
SPLICE S119 (8W-70-9)
ABS PUMP MOTOR RELAY (8W-11-7)
ABS POWER RELAY (8W-11-6)
ABS HYDRAULIC ACTUATION UNIT (8W-32-6)
B235 14GY/YL
B205 18VT
B235 14GY YL
B235 14GY YL
B235 14GY YL
C131
C131
S122
B235 14GY/YL
(2)
D101 DIODE
(1)
B235 14GY YL
B235 14GY YL
C126
33
3
ABS POWER RELAY OUTPUT
ANTI-LOCK BRAKE SYSTEM MODULE
▶HOT AT ALL TIMES◀
FUSE 1 60A
FUSE 9 60A
POWER DISTRIBUTION CENTER
GENERATOR (8W-20-2)
C145
BLACK
A11 10BK GY
A11 10BK GY
A11 8BK WT
S123
A11 8BK/GY
DISTRIBUTOR IGNITION COIL (8W-30-11)
SPLICE S116 (8W-70-8)
FOG LAMP RELAY (8W-50-10)
LEFT FOG LAMP (8W-50-10)
RIGHT FOG LAMP (8W-50-10)
A142 16DG OR
A142 14DG OR
C147
A142 16DG OR
S124
117 14LG BK
117 14LG BK
117 14LG BK
S125
A142 18DG OR
GENERATOR (8W-20-2)

J958W-13

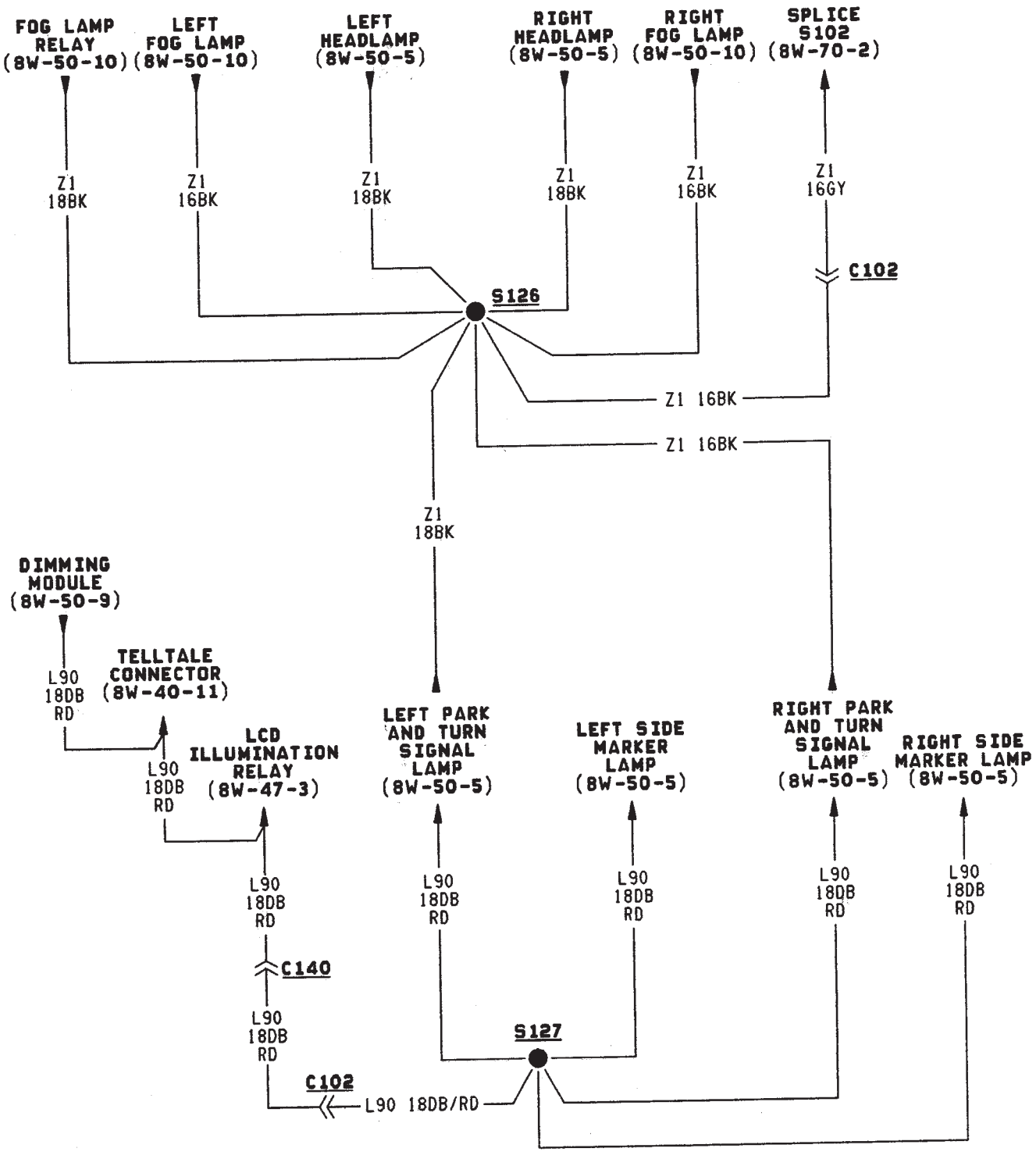
FOG LAMP RELAY (8W-50-10)
LEFT FOG LAMP (8W-50-10)
LEFT HEADLAMP (8W-50-5)
RIGHT HEADLAMP (8W-50-5)
RIGHT FOG LAMP (8W-50-10)
SPLICE S102 (8W-70-2)
Z1 18BK
Z1 16BK
Z1 18BK
Z1 18BK
Z1 16BK
Z1 16GY
C102
S126
Z1 16BK
Z1 16BK
Z1 18BK
DIMMING MODULE (8W-50-9)
L90 18DB RD
TELLTALE CONNECTOR (8W-40-11)
L90 18DB RD
LCD ILLUMINATION RELAY (8W-47-3)
LEFT PARK AND TURN SIGNAL LAMP (8W-50-5)
LEFT SIDE MARKER LAMP (8W-50-5)
RIGHT PARK AND TURN SIGNAL LAMP (8W-50-5)
RIGHT SIDE MARKER LAMP (8W-50-5)
L90 18DB RD
L90 18DB RD
L90 18DB RD
L90 18DB RD
L90 18DB RD
C140
L90 18DB RD
S127
C102
L90 18DB/RD

J958W-13

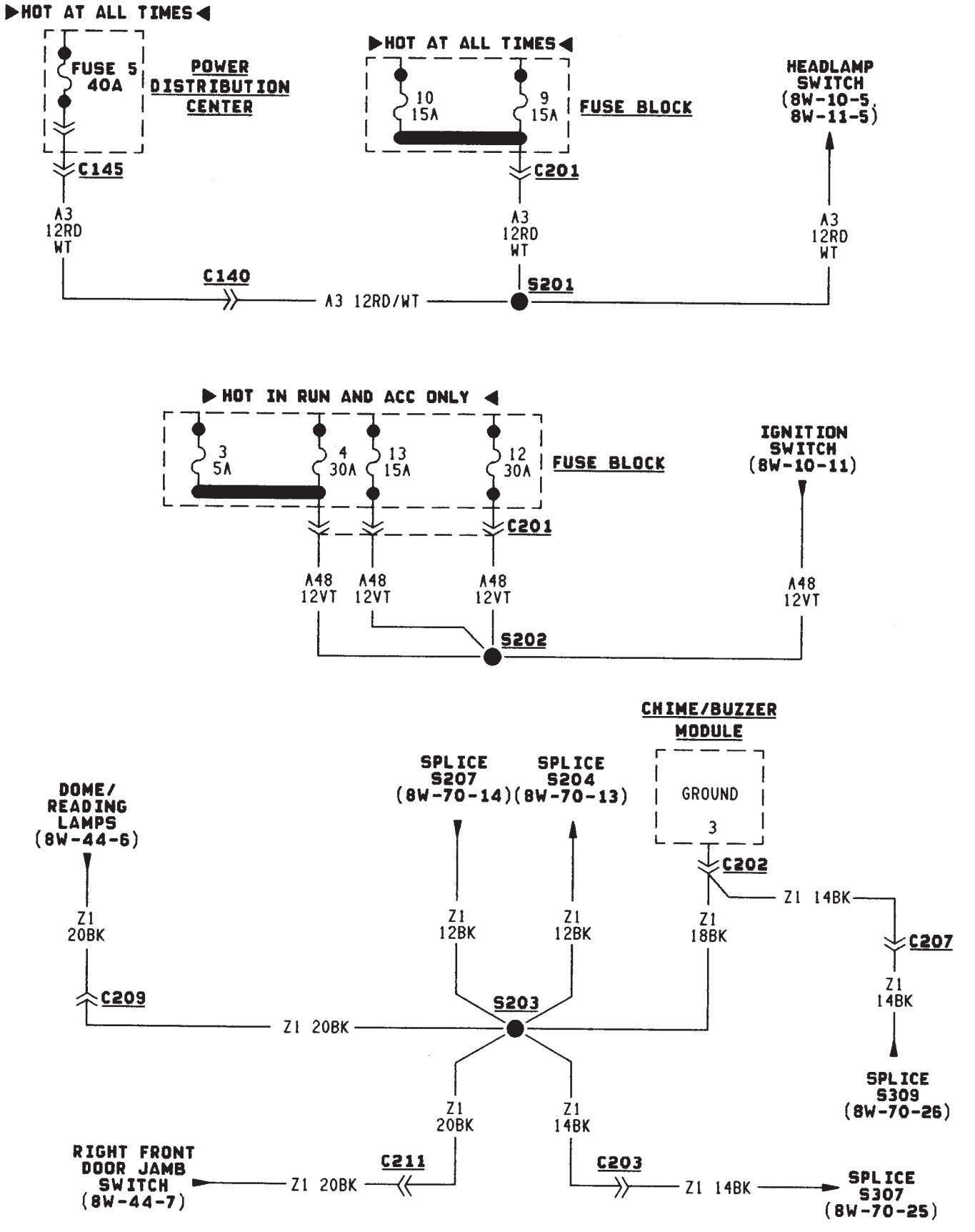
▶HOT AT ALL TIMES◀
FUSE 5
40A
POWER
DISTRIBUTION
CENTER
C145
A3
12RD
WT
▶HOT AT ALL TIMES◀
10
15A
9
15A
FUSE BLOCK
C201
A3
12RD
WT
HEADLAMP
SWITCH
(8W-10-5,
8W-11-5)
A3
12RD
WT
C140
A3 12RD/WT
S201
▶HOT IN RUN AND ACC ONLY◀
3
5A
4
30A
13
15A
12
30A
FUSE BLOCK
C201
IGNITION
SWITCH
(8W-10-11)
A48
12VT
A48
12VT
A48
12VT
A48
12VT
S202
CHIME/BUZZER
MODULE
GROUND
3
C202
SPLICE
S207
(8W-70-14)
SPLICE
S204
(8W-70-13)
DOME/
READING
LAMPS
(8W-44-6)
Z1
20BK
Z1
12BK
Z1
12BK
Z1
18BK
Z1 14BK
C207
Z1
14BK
C209
S203
Z1 20BK
SPLICE
S309
(8W-70-26)
Z1
20BK
Z1
14BK
RIGHT FRONT
DOOR JAMB
SWITCH
(8W-44-7)
Z1 20BK
C211
C203
Z1 14BK
SPLICE
S307
(8W-70-25)

J958W-13

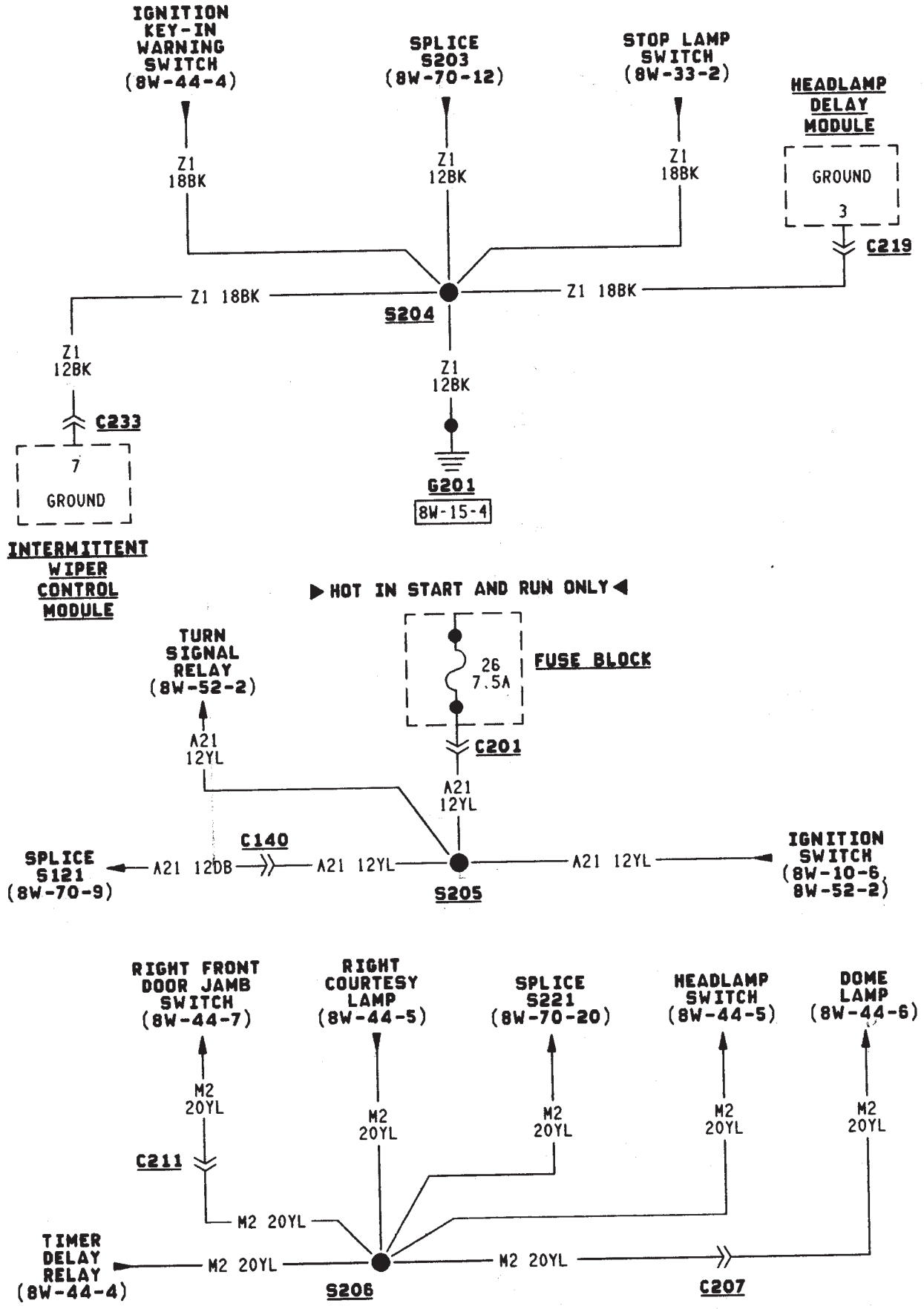
IGNITION KEY-IN WARNING SWITCH (8W-44-4)
SPLICE S203 (8W-70-12)
STOP LAMP SWITCH (8W-33-2)
HEADLAMP DELAY MODULE
GROUND
3
C219
Z1 18BK
Z1 12BK
Z1 18BK
Z1 18BK
S204
Z1 12BK
Z1 12BK
C233
7
GROUND
G201
8W-15-4
INTERMITTENT WIPER CONTROL MODULE
▶ HOT IN START AND RUN ONLY ◀
TURN SIGNAL RELAY (8W-52-2)
26 7.5A
FUSE BLOCK
C201
A21 12YL
A21 12YL
C140
SPLICE S121 (8W-70-9)
A21 12DB
A21 12YL
A21 12YL
S205
IGNITION SWITCH (8W-10-6, 8W-52-2)
RIGHT FRONT DOOR JAMB SWITCH (8W-44-7)
RIGHT COURTESY LAMP (8W-44-5)
SPLICE S221 (8W-70-20)
HEADLAMP SWITCH (8W-44-5)
DOME LAMP (8W-44-6)
M2 20YL
M2 20YL
M2 20YL
M2 20YL
M2 20YL
C211
M2 20YL
TIMER DELAY RELAY (8W-44-4)
M2 20YL
M2 20YL
S206
C207

J958W-13

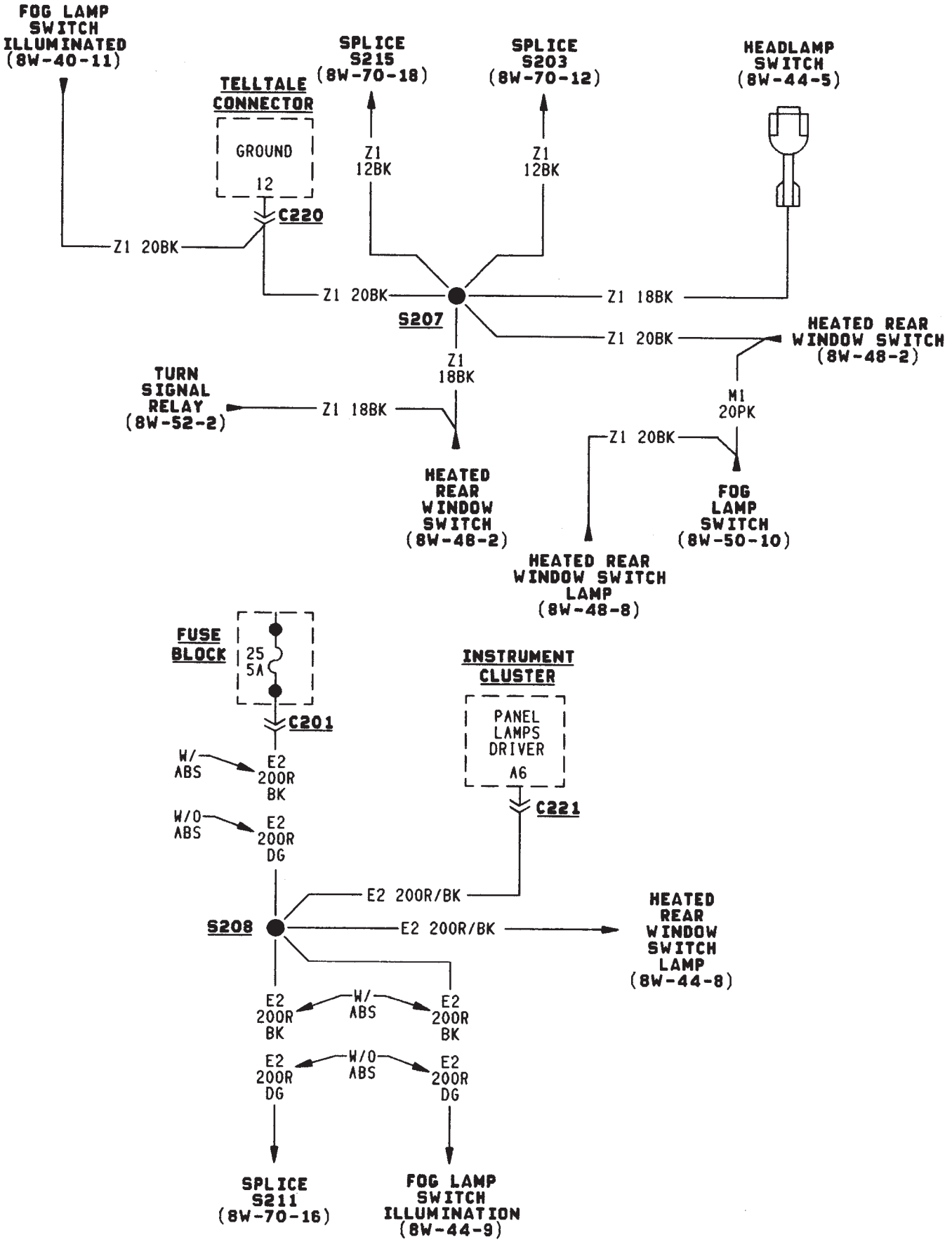
FOG LAMP SWITCH ILLUMINATED (8W-40-11)
TELLTALE CONNECTOR
GROUND
12
C220
Z1 20BK
SPLICE S215 (8W-70-18)
SPLICE S203 (8W-70-12)
Z1 12BK
Z1 12BK
HEADLAMP SWITCH (8W-44-5)
Z1 20BK
Z1 18BK
S207
Z1 20BK
HEATED REAR WINDOW SWITCH (8W-48-2)
Z1 18BK
TURN SIGNAL RELAY (8W-52-2)
Z1 18BK
M1 20PK
Z1 20BK
HEATED REAR WINDOW SWITCH (8W-48-2)
FOG LAMP SWITCH (8W-50-10)
HEATED REAR WINDOW SWITCH LAMP (8W-48-8)
FUSE BLOCK
25 5A
C201
W/ ABS
E2 200R BK
W/O ABS
E2 200R DG
INSTRUMENT CLUSTER
PANEL LAMPS DRIVER
A6
C221
E2 200R/BK
S208
E2 200R/BK
HEATED REAR WINDOW SWITCH LAMP (8W-44-8)
E2 200R BK
W/ ABS
E2 200R BK
E2 200R DG
W/O ABS
E2 200R DG
SPLICE S211 (8W-70-16)
FOG LAMP SWITCH ILLUMINATION (8W-44-9)

J958W-13

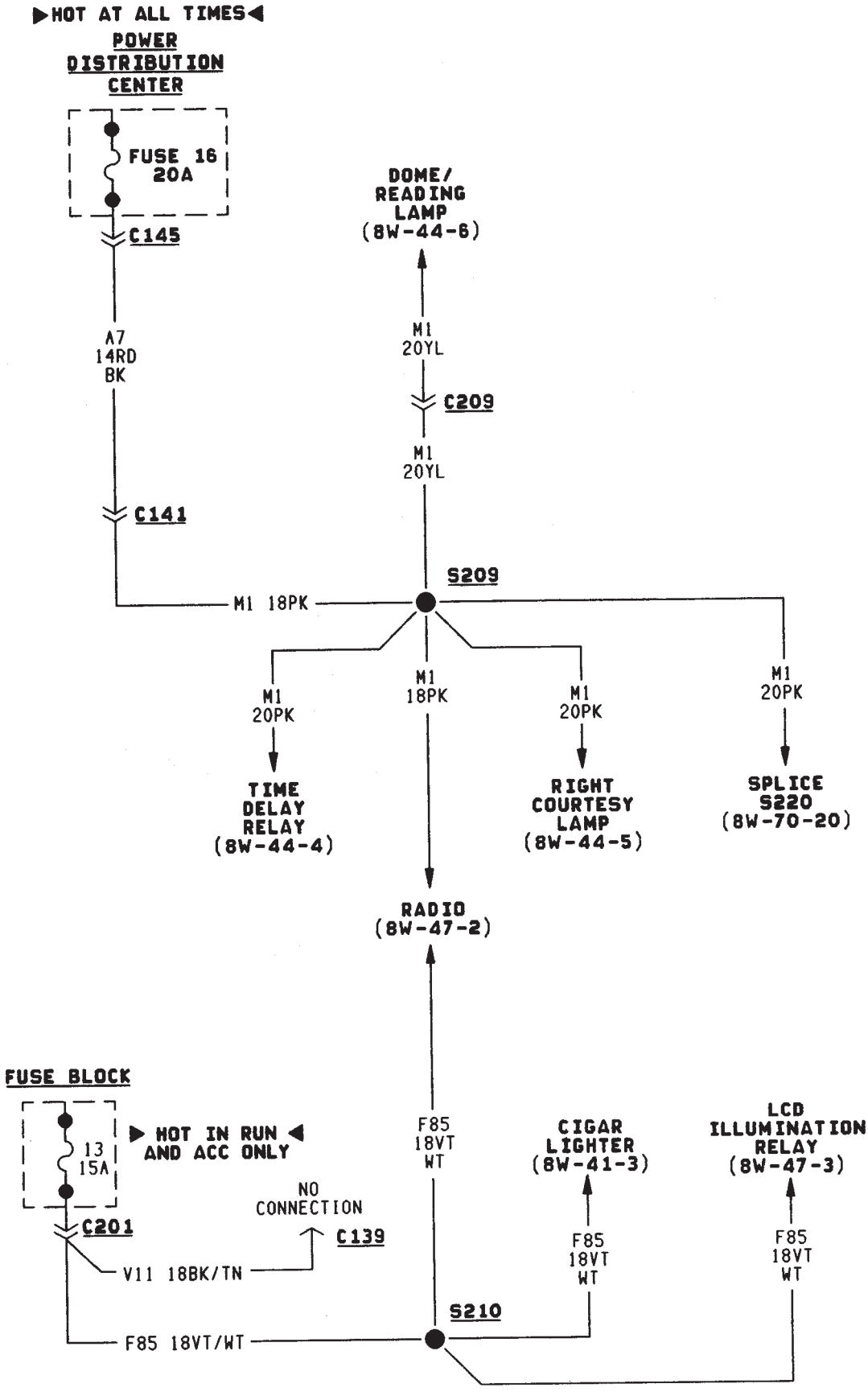
▶HOT AT ALL TIMES◀
POWER DISTRIBUTION CENTER
FUSE 16 20A
C145
A7 14RD BK
C141
DOME/ READING LAMP (8W-44-6)
M1 20YL
C209
M1 20YL
S209
M1 18PK
M1 20PK
TIME DELAY RELAY (8W-44-4)
M1 18PK
M1 20PK
RIGHT COURTESY LAMP (8W-44-5)
M1 20PK
SPLICE S220 (8W-70-20)
RADIO (8W-47-2)
FUSE BLOCK
13 15A
▶HOT IN RUN AND ACC ONLY◀
C201
V11 18BK/TN
NO CONNECTION
C139
F85 18VT WT
CIGAR LIGHTER (8W-41-3)
F85 18VT WT
LCD ILLUMINATION RELAY (8W-47-3)
F85 18VT WT
S210
F85 18VT/WT

J958W-13

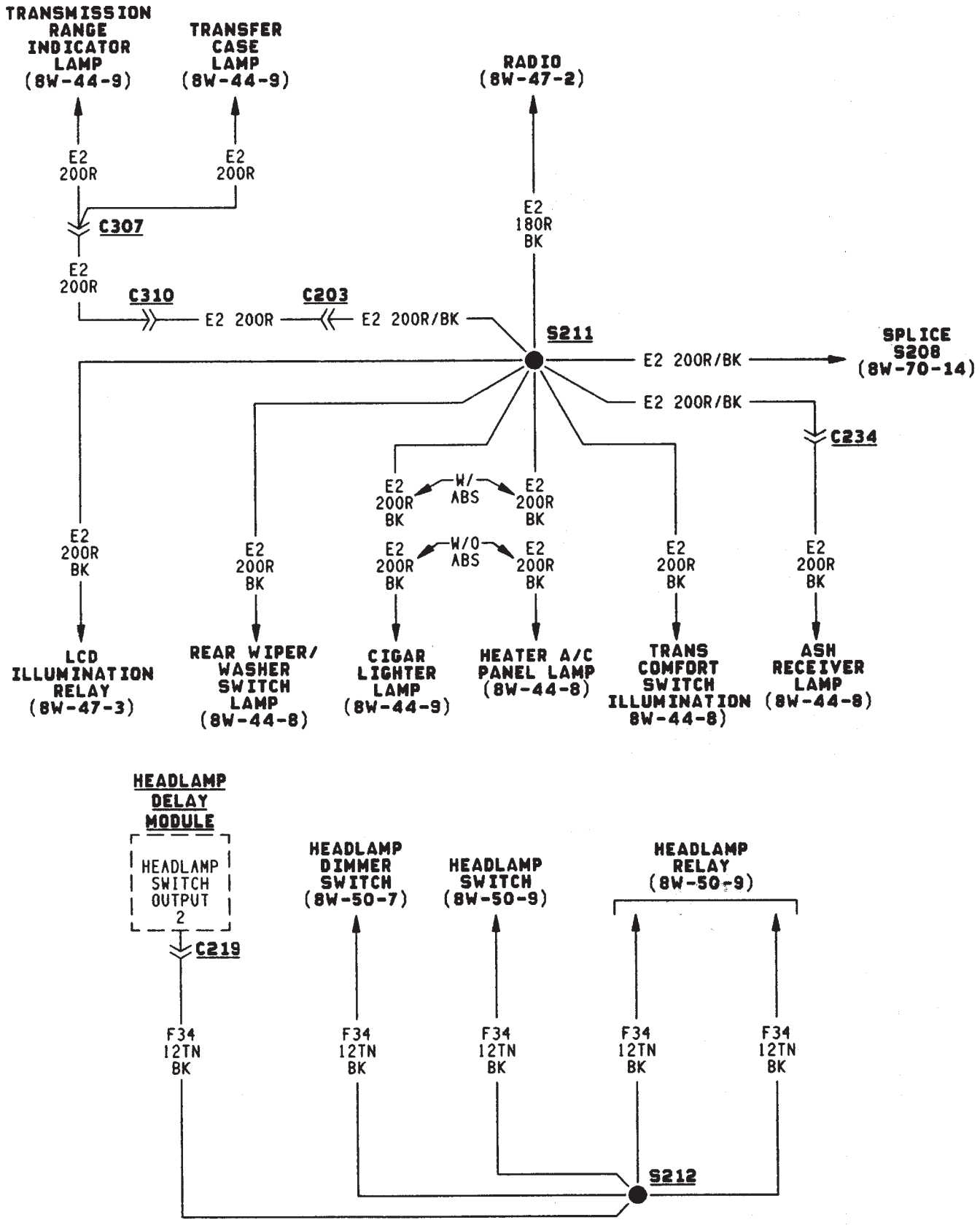
TRANSMISSION RANGE INDICATOR LAMP (8W-44-9)
TRANSFER CASE LAMP (8W-44-9)
RADIO (8W-47-2)
E2 200R
E2 200R
E2 180R BK
C307
E2 200R
C310
E2 200R
C203
E2 200R/BK
S211
SPLICE S208 (8W-70-14)
E2 200R/BK
E2 200R/BK
C234
E2 200R BK
W/ ABS
E2 200R BK
E2 200R BK
W/O ABS
E2 200R BK
E2 200R BK
E2 200R BK
E2 200R BK
LCD ILLUMINATION RELAY (8W-47-3)
E2 200R BK
REAR WIPER/ WASHER SWITCH LAMP (8W-44-8)
E2 200R BK
CIGAR LIGHTER LAMP (8W-44-9)
E2 200R BK
HEATER A/C PANEL LAMP (8W-44-8)
E2 200R BK
TRANS COMFORT SWITCH ILLUMINATION 8W-44-8)
E2 200R BK
ASH RECEIVER LAMP (8W-44-8)
HEADLAMP DELAY MODULE
HEADLAMP SWITCH OUTPUT 2
C219
HEADLAMP DIMMER SWITCH (8W-50-7)
HEADLAMP SWITCH (8W-50-9)
HEADLAMP RELAY (8W-50-9)
F34 12TN BK
F34 12TN BK
F34 12TN BK
F34 12TN BK
F34 12TN BK
S212

J958W-13

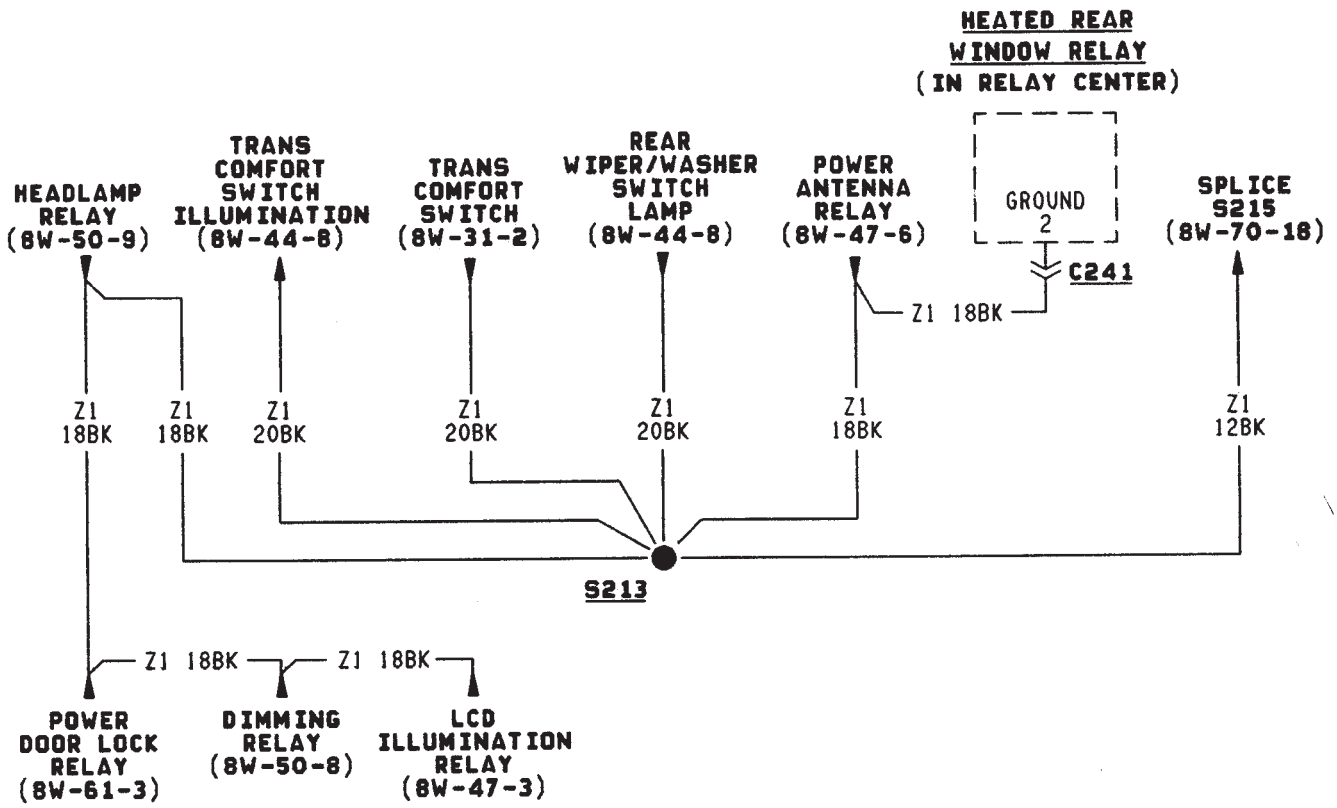
HEATED REAR WINDOW RELAY (IN RELAY CENTER)
HEADLAMP RELAY (8W-50-9)
TRANS COMFORT SWITCH ILLUMINATION (8W-44-8)
TRANS COMFORT SWITCH (8W-31-2)
REAR WIPER/WASHER SWITCH LAMP (8W-44-8)
POWER ANTENNA RELAY (8W-47-6)
GROUND 2
SPLICE S215 (8W-70-18)
C241
Z1 18BK
Z1 18BK
Z1 18BK
Z1 20BK
Z1 20BK
Z1 20BK
Z1 18BK
Z1 12BK
S213
Z1 18BK
Z1 18BK
POWER DOOR LOCK RELAY (8W-61-3)
DIMMING RELAY (8W-50-8)
LCD ILLUMINATION RELAY (8W-47-3)

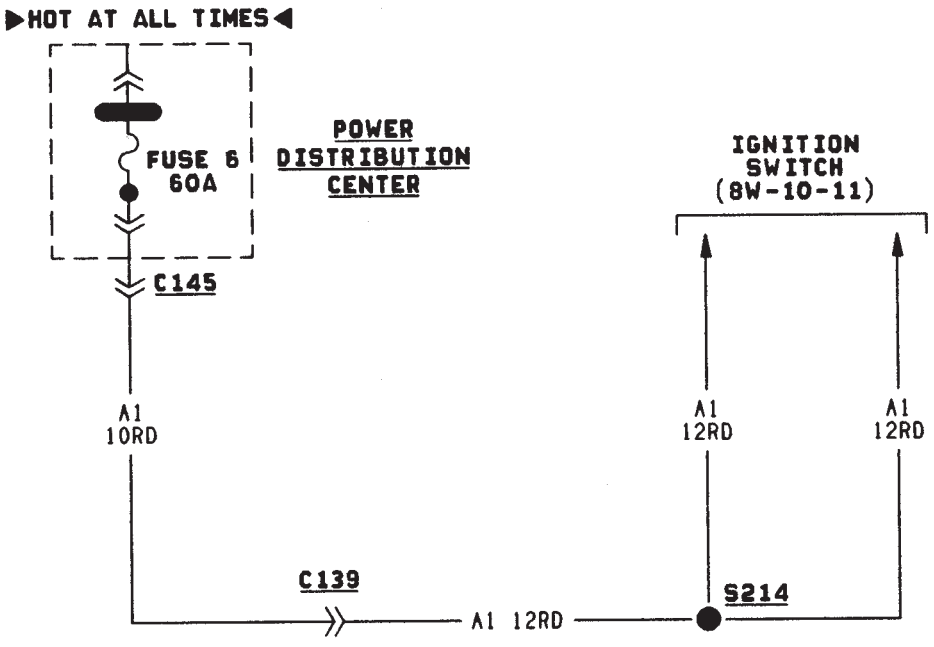
▶HOT AT ALL TIMES◀
FUSE 6 60A
POWER DISTRIBUTION CENTER
C145
A1 10RD
IGNITION SWITCH (8W-10-11)
A1 12RD
A1 12RD
C139
A1 12RD
S214

J958W-13

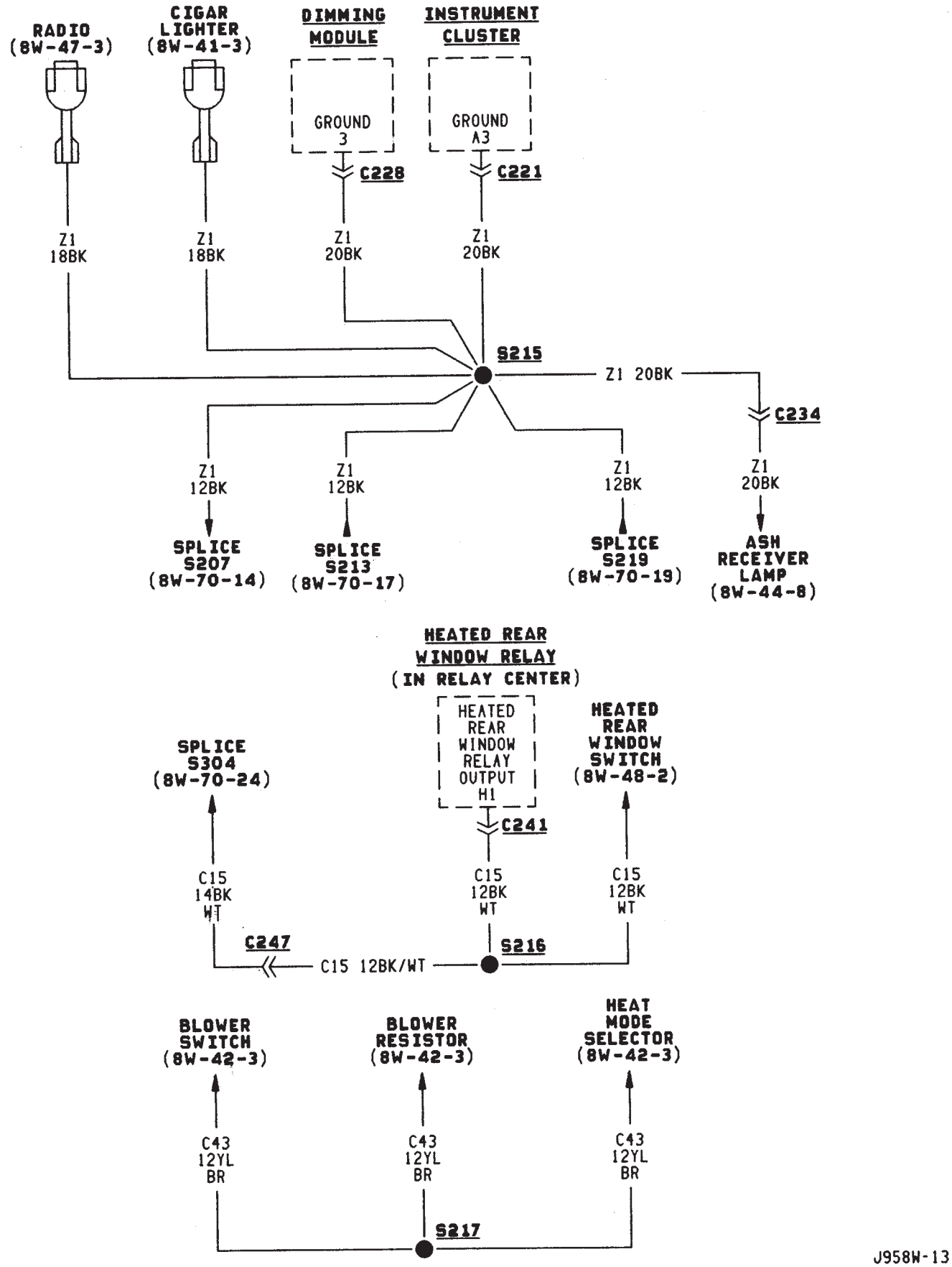
RADIO
(8W-47-3)
CIGAR LIGHTER
(8W-41-3)
DIMMING MODULE
GROUND 3
C228
INSTRUMENT CLUSTER
GROUND A3
C221
Z1 18BK
Z1 18BK
Z1 20BK
Z1 20BK
S215
Z1 20BK
C234
Z1 12BK
Z1 12BK
Z1 12BK
Z1 20BK
SPLICE S207 (8W-70-14)
SPLICE S213 (8W-70-17)
SPLICE S219 (8W-70-19)
ASH RECEIVER LAMP (8W-44-8)
HEATED REAR WINDOW RELAY
(IN RELAY CENTER)
HEATED REAR WINDOW RELAY OUTPUT H1
C241
HEATED REAR WINDOW SWITCH (8W-48-2)
SPLICE S304 (8W-70-24)
C15 14BK WT
C15 12BK WT
C15 12BK WT
C247
C15 12BK/WT
S216
BLOWER SWITCH (8W-42-3)
BLOWER RESISTOR (8W-42-3)
HEAT MODE SELECTOR (8W-42-3)
C43 12YL BR
C43 12YL BR
C43 12YL BR
S217

J958W-13

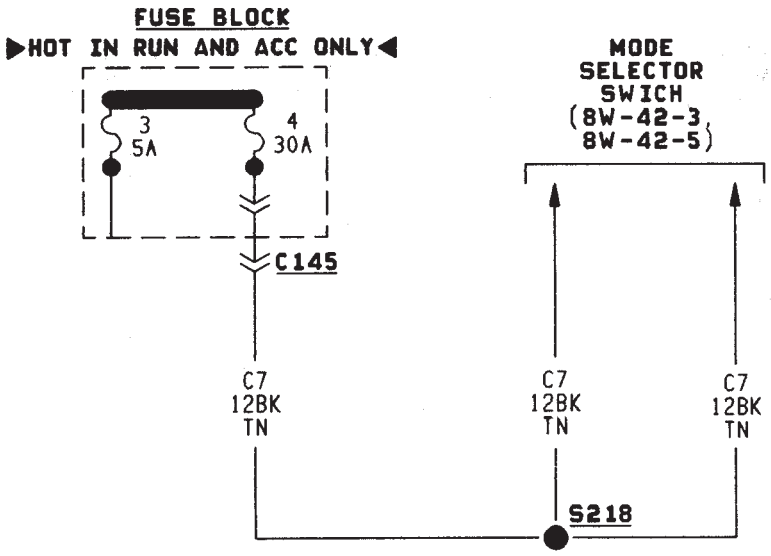
FUSE BLOCK
▶HOT IN RUN AND ACC ONLY◀
3
5A
4
30A
C145
C7
12BK
TN
MODE
SELECTOR
SWICH
(8W-42-3,
8W-42-5)
C7
12BK
TN
C7
12BK
TN
S218

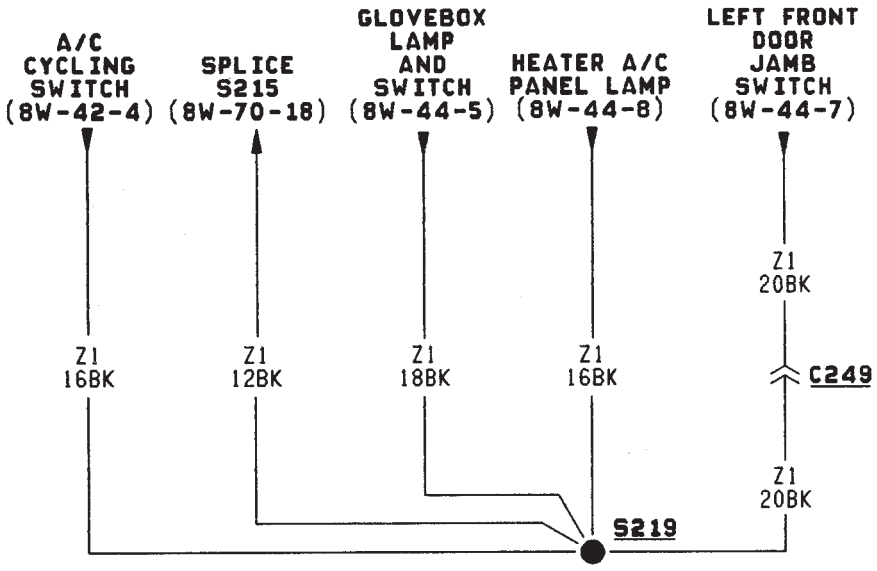
A/C
CYCLING
SWITCH
(8W-42-4)
SPLICE
S215
(8W-70-18)
GLOVEBOX
LAMP
AND
SWITCH
(8W-44-5)
HEATER A/C
PANEL LAMP
(8W-44-8)
LEFT FRONT
DOOR
JAMB
SWITCH
(8W-44-7)
Z1
16BK
Z1
12BK
Z1
18BK
Z1
16BK
Z1
20BK
C249
Z1
20BK
S219

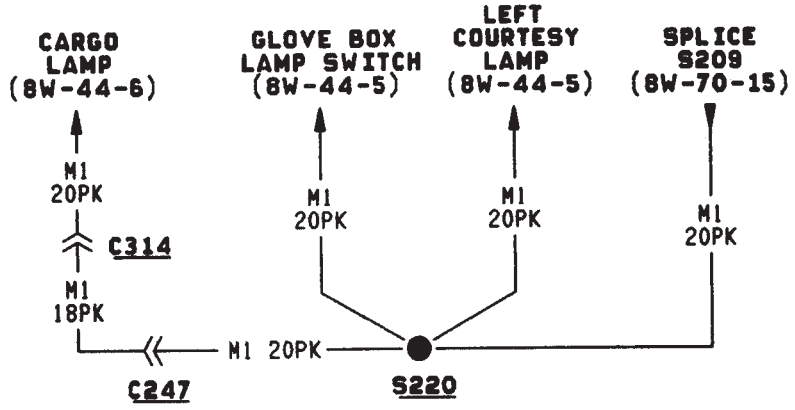
CARGO LAMP (8W-44-6)
GLOVE BOX LAMP SWITCH (8W-44-5)
LEFT COURTESY LAMP (8W-44-5)
SPLICE S209 (8W-70-15)
M1 20PK
C314
M1 18PK
M1 20PK
C247
S220

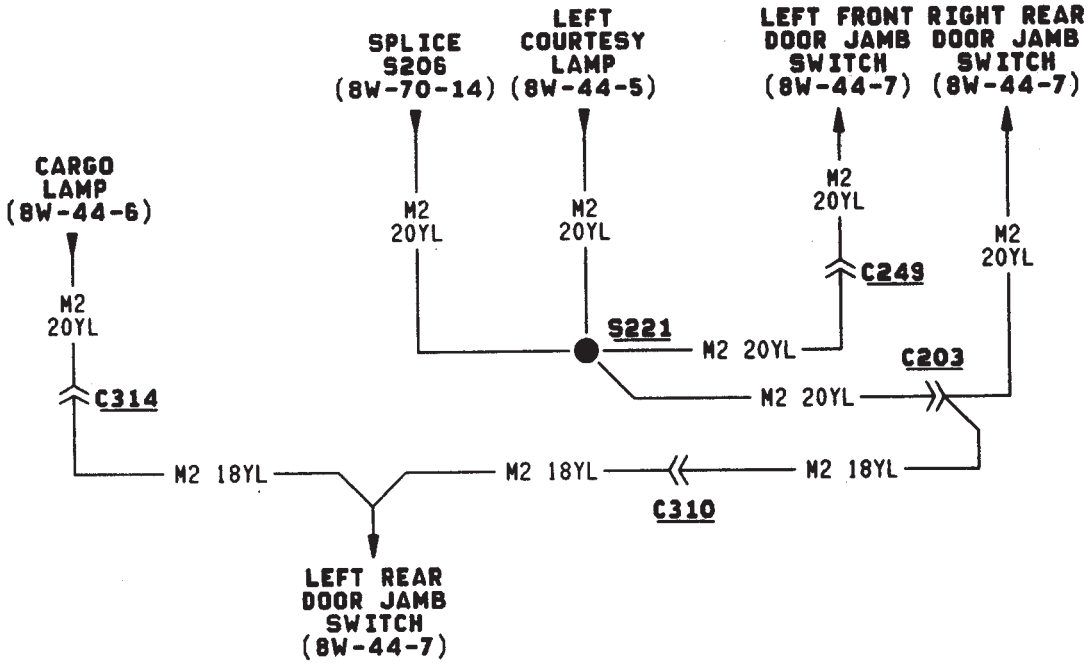
SPLICE S206 (8W-70-14)
LEFT COURTESY LAMP (8W-44-5)
LEFT FRONT DOOR JAMB SWITCH (8W-44-7)
RIGHT REAR DOOR JAMB SWITCH (8W-44-7)
CARGO LAMP (8W-44-6)
M2 20YL
C314
C249
S221
C203
C310
M2 18YL
LEFT REAR DOOR JAMB SWITCH (8W-44-7)

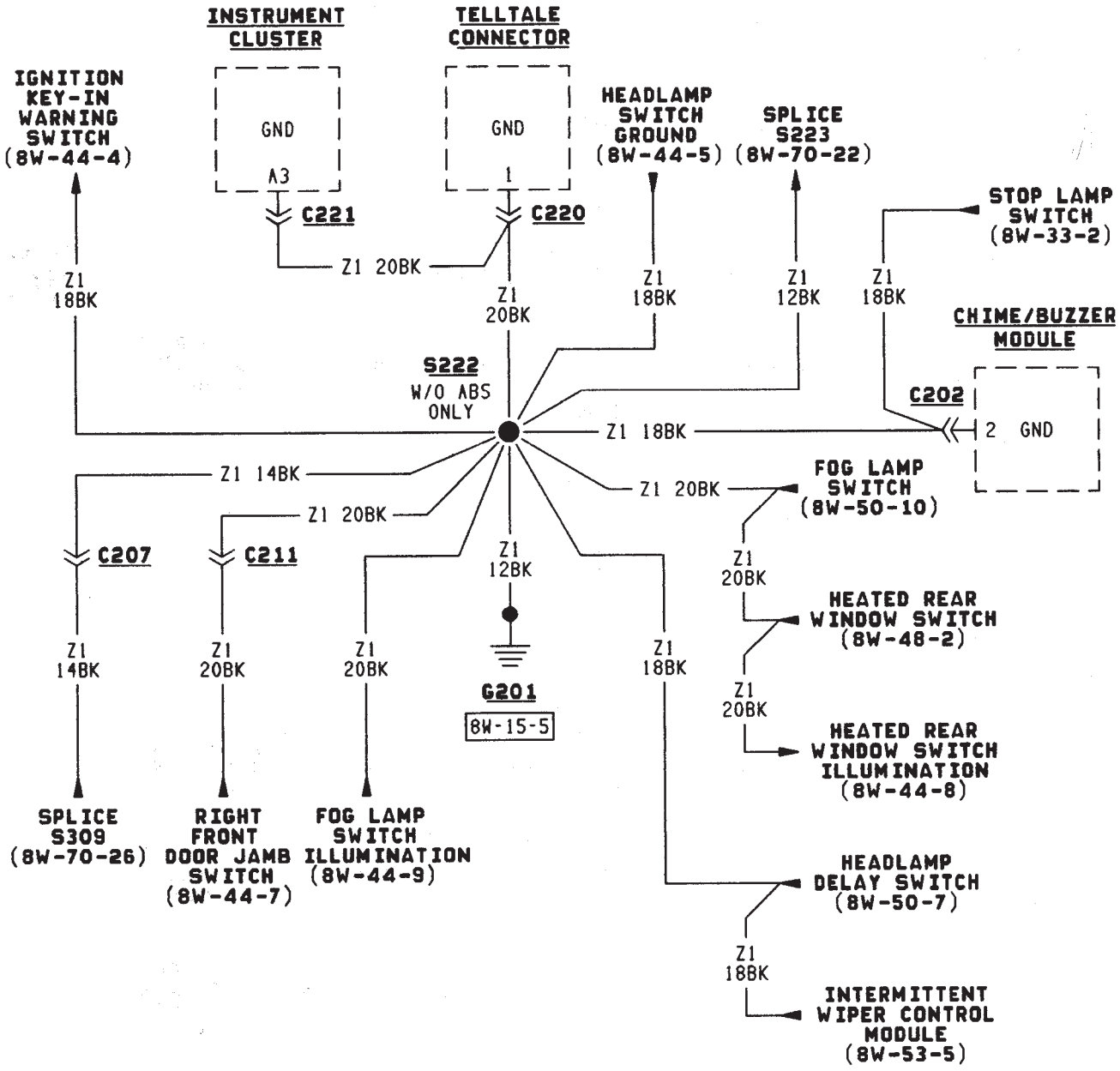
INSTRUMENT CLUSTER
TELLTALE CONNECTOR
IGNITION KEY-IN WARNING SWITCH (8W-44-4)
GND
A3
GND
1
HEADLAMP SWITCH GROUND (8W-44-5)
SPLICE S223 (8W-70-22)
STOP LAMP SWITCH (8W-33-2)
C221
C220
Z1 20BK
Z1 18BK
Z1 20BK
Z1 18BK
Z1 12BK
Z1 18BK
CHIME/BUZZER MODULE
S222
W/O ABS ONLY
C202
2 GND
Z1 18BK
Z1 14BK
Z1 20BK
Z1 20BK
FOG LAMP SWITCH (8W-50-10)
C207
C211
Z1 12BK
Z1 20BK
HEATED REAR WINDOW SWITCH (8W-48-2)
Z1 14BK
Z1 20BK
Z1 20BK
Z1 18BK
Z1 20BK
G201
8W-15-5
HEATED REAR WINDOW SWITCH ILLUMINATION (8W-44-8)
SPLICE S309 (8W-70-26)
RIGHT FRONT DOOR JAMB SWITCH (8W-44-7)
FOG LAMP SWITCH ILLUMINATION (8W-44-9)
HEADLAMP DELAY SWITCH (8W-50-7)
Z1 18BK
INTERMITTENT WIPER CONTROL MODULE (8W-53-5)

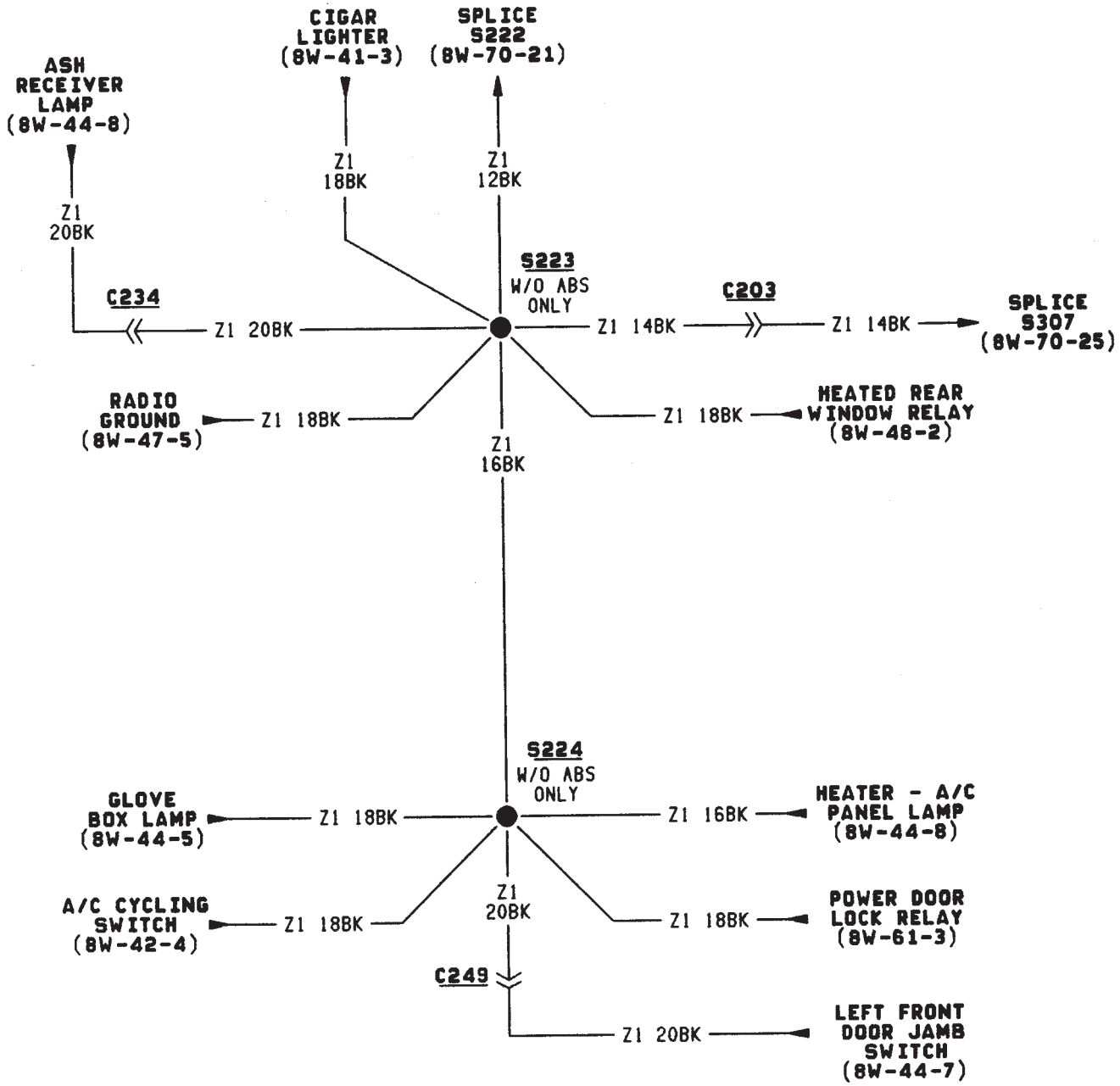
CIGAR LIGHTER (8W-41-3)
SPLICE S222 (8W-70-21)
ASH RECEIVER LAMP (8W-44-8)
Z1 18BK
Z1 12BK
Z1 20BK
S223
W/O ABS ONLY
C234
C203
Z1 20BK
Z1 14BK
Z1 14BK
SPLICE S307 (8W-70-25)
RADIO GROUND (8W-47-5)
Z1 18BK
Z1 18BK
HEATED REAR WINDOW RELAY (8W-48-2)
Z1 16BK
S224
W/O ABS ONLY
GLOVE BOX LAMP (8W-44-5)
Z1 18BK
Z1 16BK
HEATER - A/C PANEL LAMP (8W-44-8)
A/C CYCLING SWITCH (8W-42-4)
Z1 18BK
Z1 20BK
Z1 18BK
POWER DOOR LOCK RELAY (8W-61-3)
C249
Z1 20BK
LEFT FRONT DOOR JAMB SWITCH (8W-44-7)

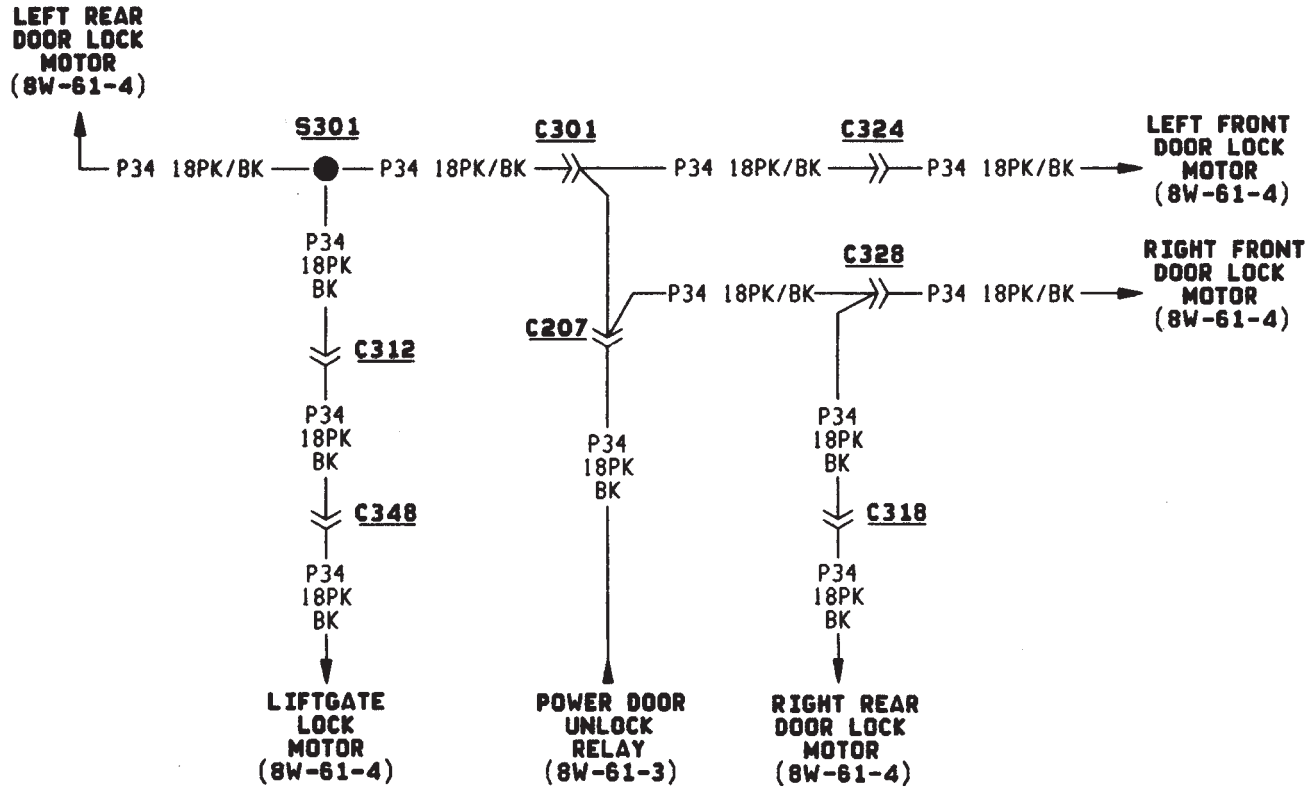
LEFT REAR DOOR LOCK MOTOR (8W-61-4)
S301
C301
C324
LEFT FRONT DOOR LOCK MOTOR (8W-61-4)
P34 18PK/BK
P34 18PK/BK
P34 18PK/BK
P34 18PK/BK
P34 18PK/BK
C328
RIGHT FRONT DOOR LOCK MOTOR (8W-61-4)
P34 18PK/BK
P34 18PK/BK
C207
C312
P34 18PK BK
P34 18PK BK
P34 18PK BK
C348
C318
P34 18PK BK
P34 18PK BK
P34 18PK BK
LIFTGATE LOCK MOTOR (8W-61-4)
POWER DOOR UNLOCK RELAY (8W-61-3)
RIGHT REAR DOOR LOCK MOTOR (8W-61-4)

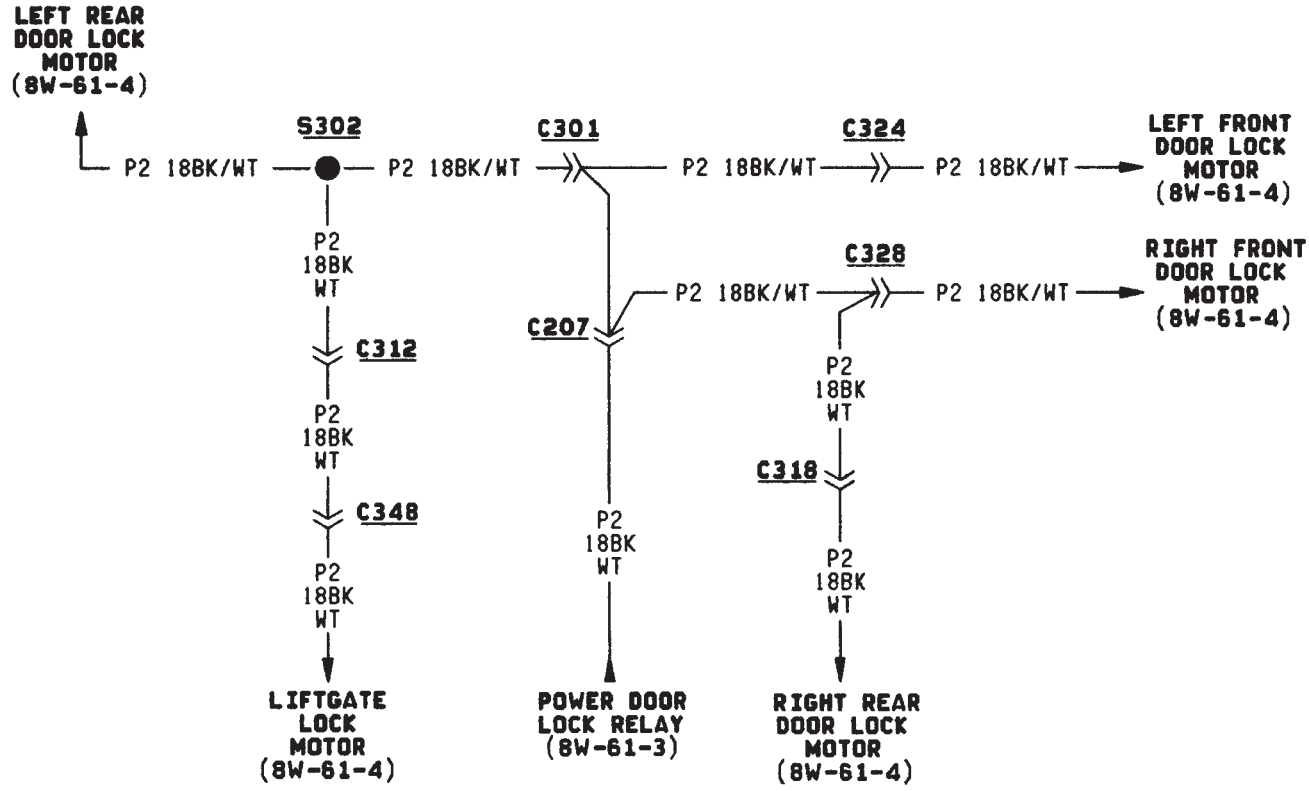
LEFT REAR DOOR LOCK MOTOR (8W-61-4)
S302
C301
C324
LEFT FRONT DOOR LOCK MOTOR (8W-61-4)
P2 18BK/WT
P2 18BK/WT
P2 18BK/WT
P2 18BK/WT
P2 18BK/WT
C328
RIGHT FRONT DOOR LOCK MOTOR (8W-61-4)
P2 18BK/WT
P2 18BK/WT
C207
C312
P2 18BK WT
P2 18BK WT
P2 18BK WT
C348
C318
P2 18BK WT
P2 18BK WT
P2 18BK WT
LIFTGATE LOCK MOTOR (8W-61-4)
POWER DOOR LOCK RELAY (8W-61-3)
RIGHT REAR DOOR LOCK MOTOR (8W-61-4)

J958W-13

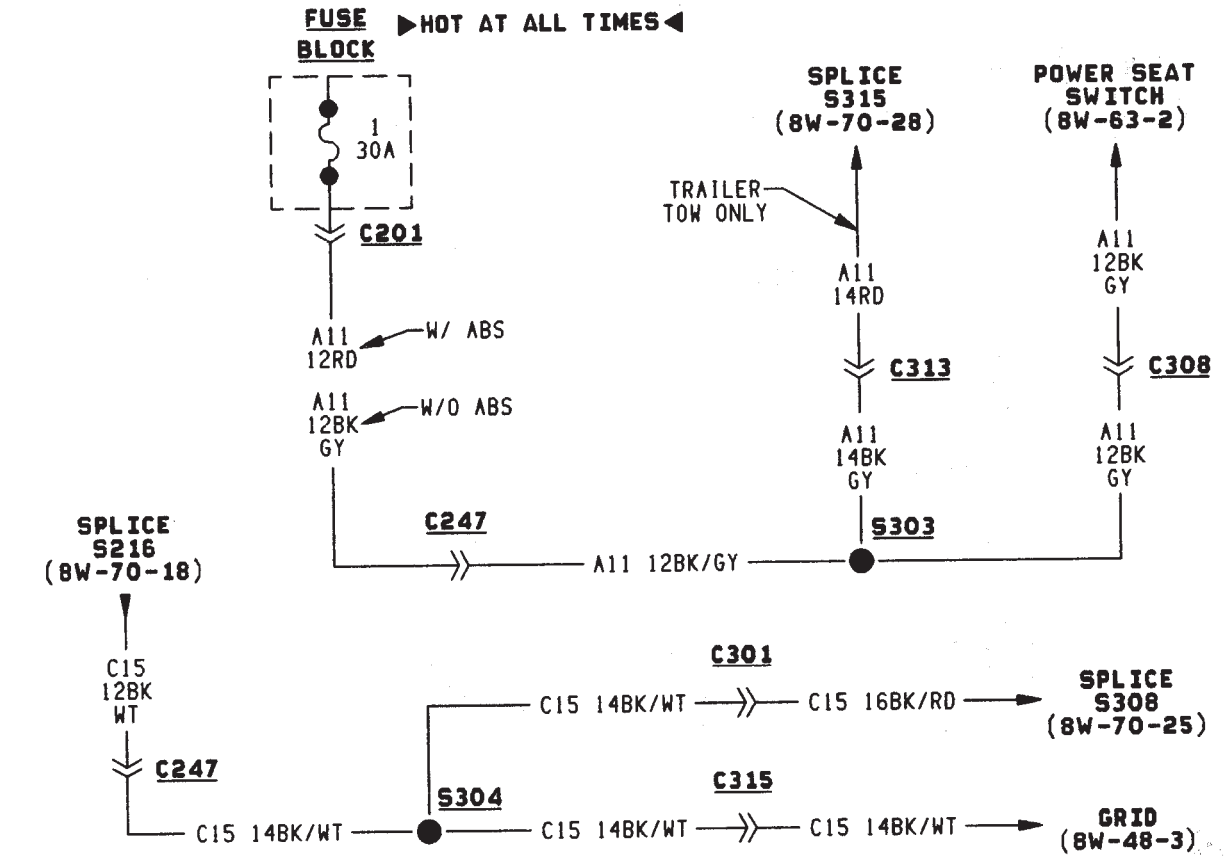
FUSE BLOCK
▶HOT AT ALL TIMES◀
1
30A
C201
A11
12RD
W/ ABS
A11
12BK
GY
W/O ABS
SPLICE
S315
(8W-70-28)
TRAILER
TOW ONLY
A11
14RD
C313
A11
14BK
GY
POWER SEAT
SWITCH
(8W-63-2)
A11
12BK
GY
C308
A11
12BK
GY
SPLICE
S216
(8W-70-18)
C247
A11 12BK/GY
S303
C15
12BK
WT
C247
C301
C15 14BK/WT
C15 16BK/RD
SPLICE
S308
(8W-70-25)
S304
C315
C15 14BK/WT
C15 14BK/WT
C15 14BK/WT
GRID
(8W-48-3)

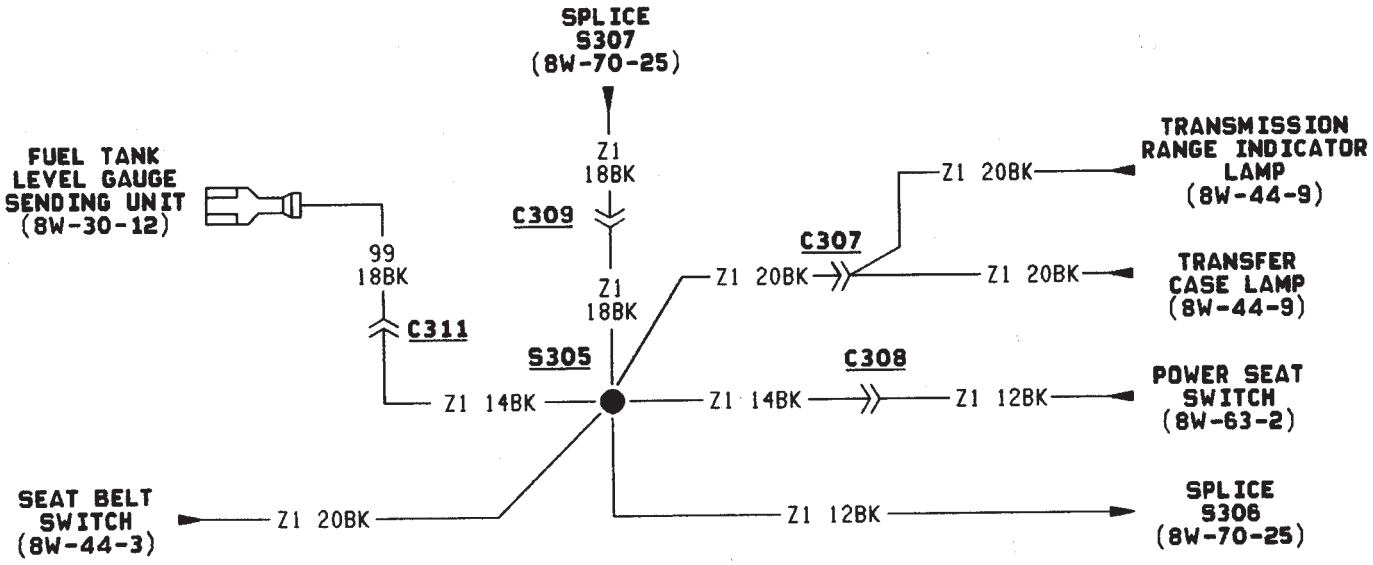
SPLICE
S307
(8W-70-25)
FUEL TANK
LEVEL GAUGE
SENDING UNIT
(8W-30-12)
Z1
18BK
C309
99
18BK
C311
Z1
18BK
S305
Z1 14BK
Z1 20BK
C307
Z1 20BK
Z1 20BK
TRANSMISSION
RANGE INDICATOR
LAMP
(8W-44-9)
TRANSFER
CASE LAMP
(8W-44-9)
C308
Z1 14BK
Z1 14BK
Z1 12BK
POWER SEAT
SWITCH
(8W-63-2)
SEAT BELT
SWITCH
(8W-44-3)
Z1 20BK
Z1 12BK
SPLICE
S306
(8W-70-25)

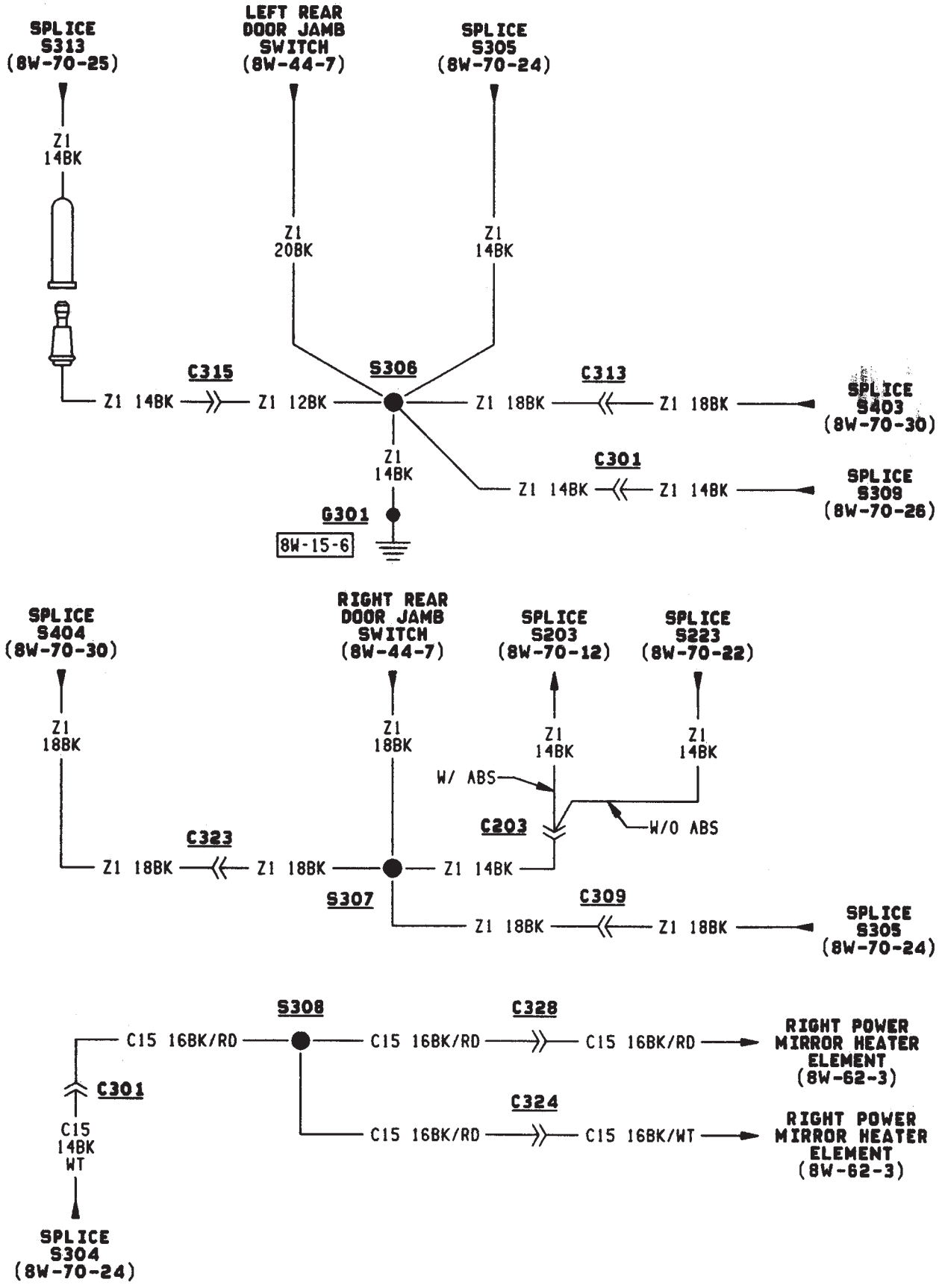
SPLICE S313 (8W-70-25)
Z1 14BK
LEFT REAR DOOR JAMB SWITCH (8W-44-7)
Z1 20BK
SPLICE S305 (8W-70-24)
Z1 14BK
C315
Z1 14BK
Z1 12BK
S306
Z1 18BK
C313
Z1 18BK
SPLICE S403 (8W-70-30)
Z1 14BK
G301
8W-15-6
C301
Z1 14BK
Z1 14BK
SPLICE S309 (8W-70-26)
SPLICE S404 (8W-70-30)
Z1 18BK
RIGHT REAR DOOR JAMB SWITCH (8W-44-7)
Z1 18BK
SPLICE S203 (8W-70-12)
Z1 14BK
SPLICE S223 (8W-70-22)
Z1 14BK
W/ ABS
W/O ABS
C203
C323
Z1 18BK
Z1 18BK
Z1 14BK
S307
C309
Z1 18BK
Z1 18BK
SPLICE S305 (8W-70-24)
S308
C328
C15 16BK/RD
C15 16BK/RD
C15 16BK/RD
RIGHT POWER MIRROR HEATER ELEMENT (8W-62-3)
C301
C15 14BK WT
C324
C15 16BK/RD
C15 16BK/WT
RIGHT POWER MIRROR HEATER ELEMENT (8W-62-3)
SPLICE S304 (8W-70-24)

J958W-13

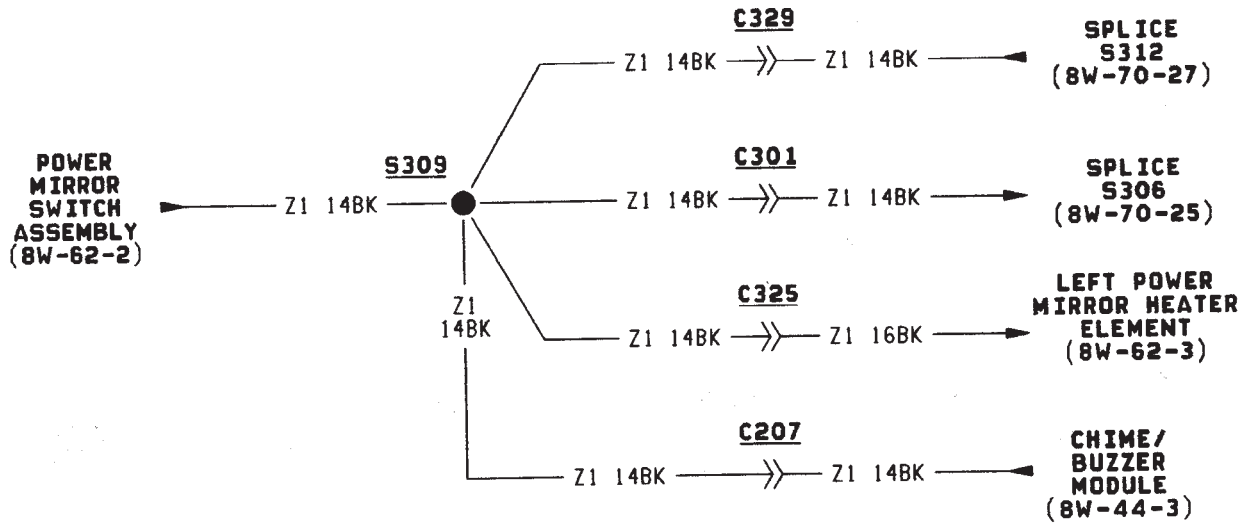
POWER MIRROR SWITCH ASSEMBLY (8W-62-2)
Z1 14BK
S309
C329
Z1 14BK
Z1 14BK
SPLICE S312 (8W-70-27)
C301
Z1 14BK
Z1 14BK
SPLICE S306 (8W-70-25)
Z1 14BK
C325
Z1 14BK
Z1 16BK
LEFT POWER MIRROR HEATER ELEMENT (8W-62-3)
C207
Z1 14BK
Z1 14BK
CHIME/ BUZZER MODULE (8W-44-3)

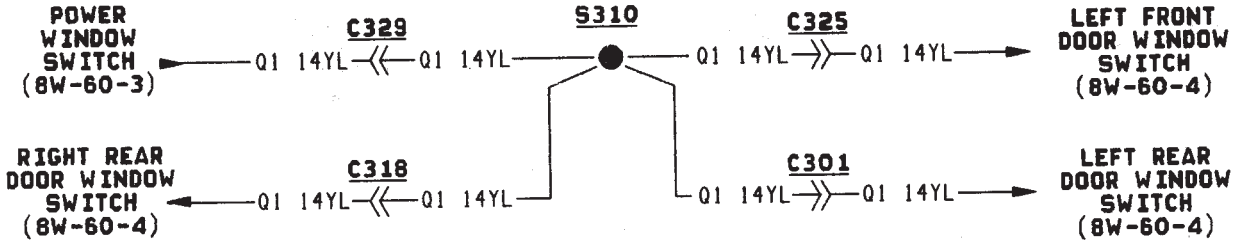
POWER WINDOW SWITCH (8W-60-3)
Q1 14YL
C329
Q1 14YL
S310
C325
Q1 14YL
Q1 14YL
LEFT FRONT DOOR WINDOW SWITCH (8W-60-4)
RIGHT REAR DOOR WINDOW SWITCH (8W-60-4)
Q1 14YL
C318
Q1 14YL
C301
Q1 14YL
Q1 14YL
LEFT REAR DOOR WINDOW SWITCH (8W-60-4)

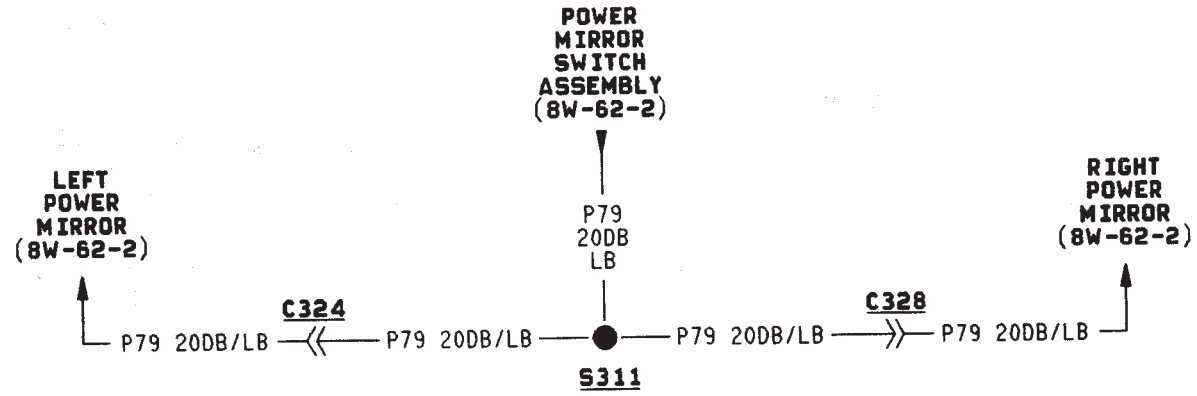
POWER MIRROR SWITCH ASSEMBLY (8W-62-2)
P79 20DB LB
LEFT POWER MIRROR (8W-62-2)
RIGHT POWER MIRROR (8W-62-2)
C324
P79 20DB/LB
P79 20DB/LB
P79 20DB/LB
C328
P79 20DB/LB
S311

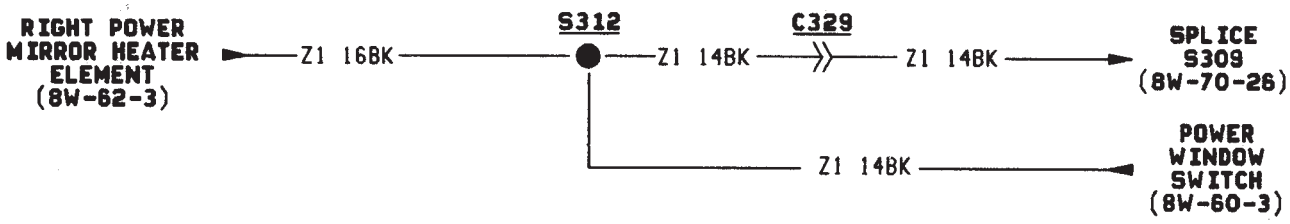
RIGHT POWER MIRROR HEATER ELEMENT (8W-62-3)
Z1 16BK
S312
Z1 14BK
C329
Z1 14BK
SPLICE S309 (8W-70-26)
Z1 14BK
POWER WINDOW SWITCH (8W-60-3)

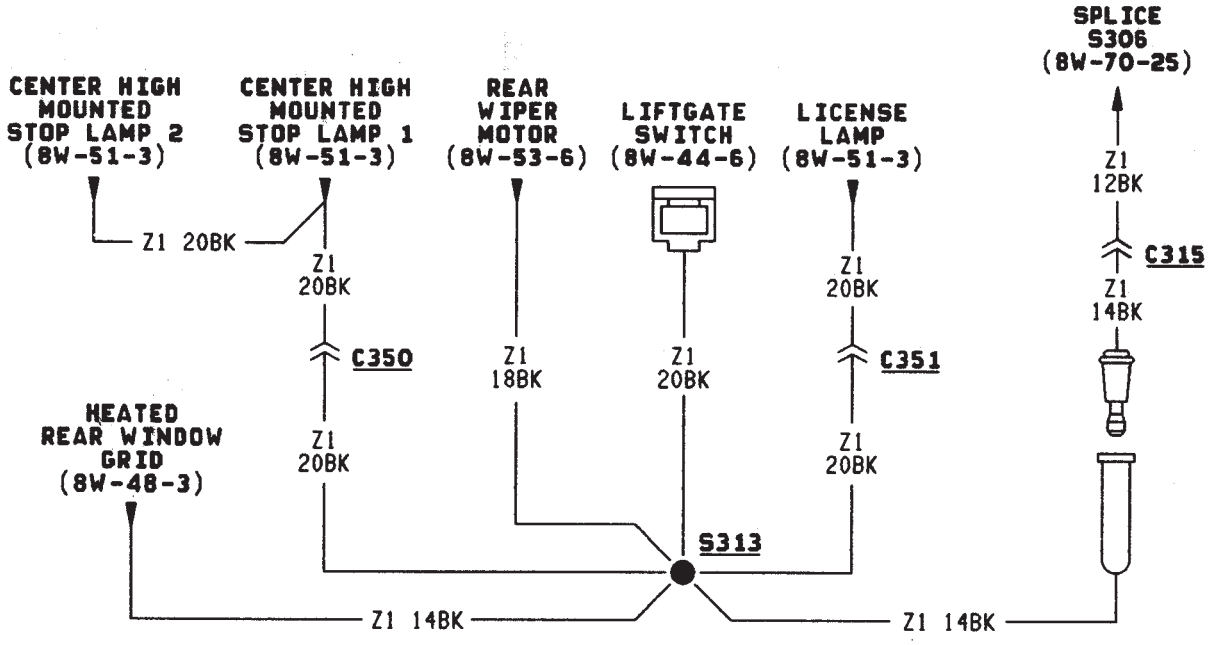
CENTER HIGH MOUNTED STOP LAMP 2 (8W-51-3)
CENTER HIGH MOUNTED STOP LAMP 1 (8W-51-3)
REAR WIPER MOTOR (8W-53-6)
LIFTGATE SWITCH (8W-44-6)
LICENSE LAMP (8W-51-3)
SPLICE S306 (8W-70-25)
Z1 20BK
Z1 20BK
C350
Z1 18BK
Z1 20BK
Z1 20BK
C351
Z1 12BK
C315
Z1 14BK
HEATED REAR WINDOW GRID (8W-48-3)
Z1 20BK
Z1 20BK
S313
Z1 14BK
Z1 14BK

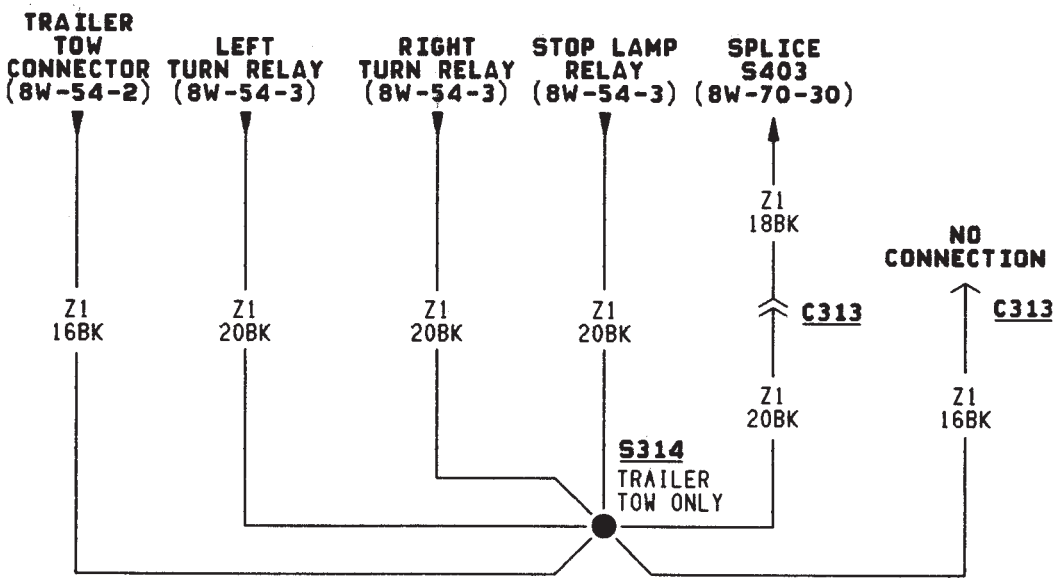
TRAILER TOW CONNECTOR (8W-54-2)
LEFT TURN RELAY (8W-54-3)
RIGHT TURN RELAY (8W-54-3)
STOP LAMP RELAY (8W-54-3)
SPLICE S403 (8W-70-30)
Z1 16BK
Z1 20BK
Z1 20BK
Z1 20BK
Z1 18BK
C313
Z1 20BK
NO CONNECTION
C313
Z1 16BK
S314
TRAILER TOW ONLY

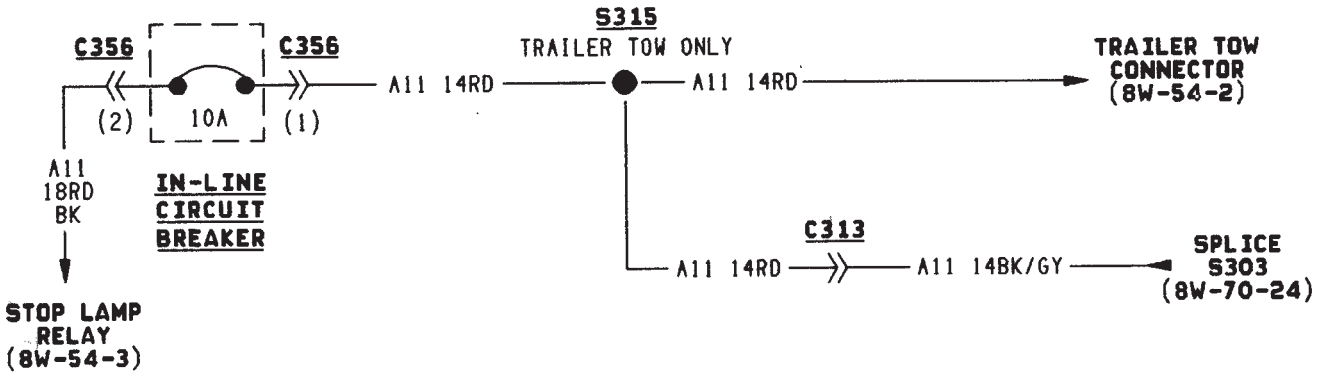
C356
C356
(2)
10A
(1)
A11 14RD
S315
TRAILER TOW ONLY
A11 14RD
TRAILER TOW CONNECTOR (8W-54-2)
A11 18RD BK
IN-LINE CIRCUIT BREAKER
C313
A11 14RD
A11 14BK/GY
SPLICE S303 (8W-70-24)
STOP LAMP RELAY (8W-54-3)

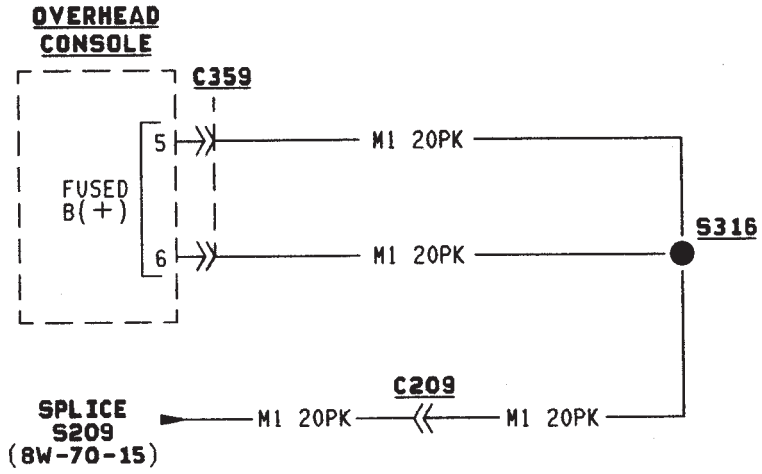
OVERHEAD CONSOLE
C359
5
6
FUSED B(+)
M1 20PK
M1 20PK
S316
C209
SPLICE S209 (8W-70-15)
M1 20PK
M1 20PK

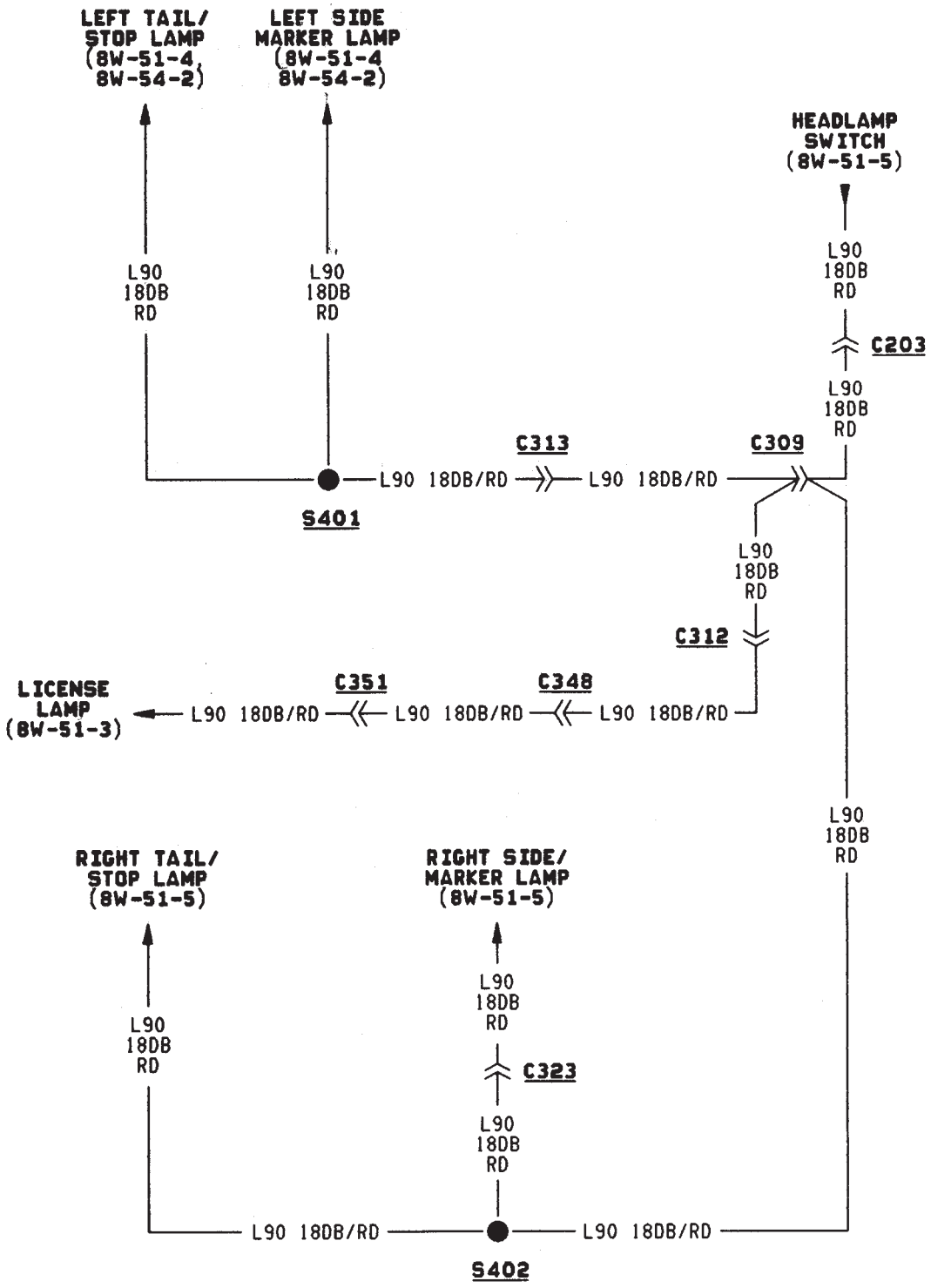
LEFT TAIL/
STOP LAMP
(8W-51-4,
8W-54-2)
LEFT SIDE
MARKER LAMP
(8W-51-4
8W-54-2)
HEADLAMP
SWITCH
(8W-51-5)
L90
18DB
RD
C203
C313
C309
L90 18DB/RD
S401
C312
C351
C348
LICENSE
LAMP
(8W-51-3)
RIGHT TAIL/
STOP LAMP
(8W-51-5)
RIGHT SIDE/
MARKER LAMP
(8W-51-5)
C323
S402

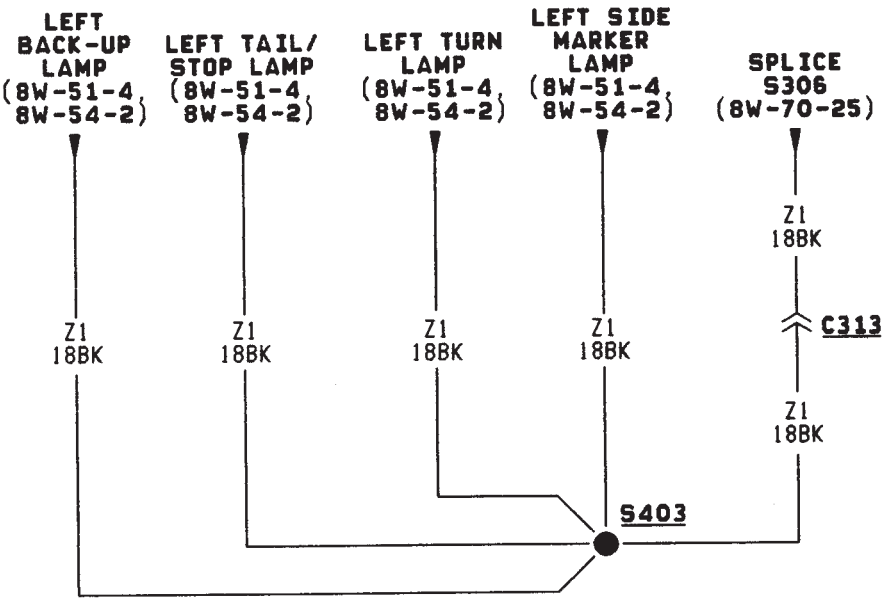
LEFT BACK-UP LAMP (8W-51-4, 8W-54-2)
LEFT TAIL/ STOP LAMP (8W-51-4, 8W-54-2)
LEFT TURN LAMP (8W-51-4, 8W-54-2)
LEFT SIDE MARKER LAMP (8W-51-4, 8W-54-2)
SPLICE S306 (8W-70-25)
Z1 18BK
Z1 18BK
Z1 18BK
Z1 18BK
Z1 18BK
C313
Z1 18BK
S403

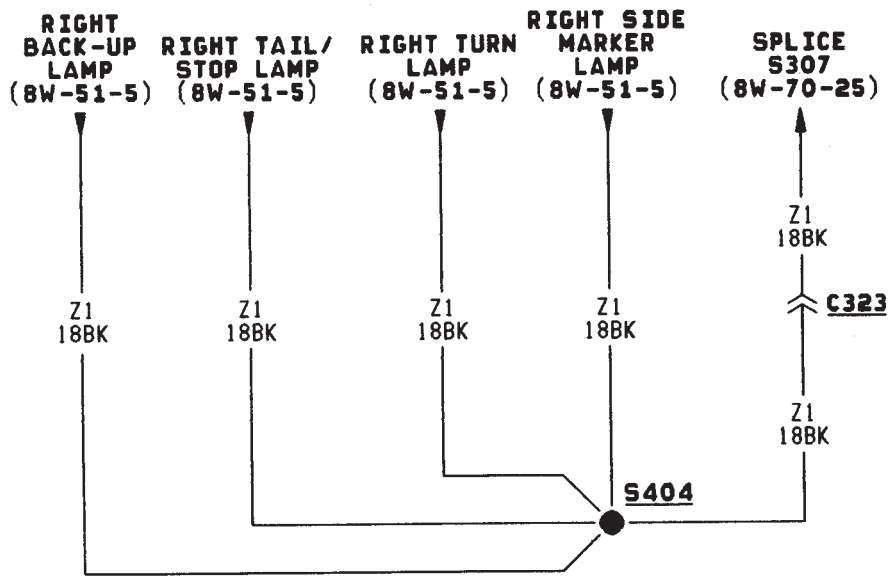
RIGHT BACK-UP LAMP (8W-51-5)
RIGHT TAIL/ STOP LAMP (8W-51-5)
RIGHT TURN LAMP (8W-51-5)
RIGHT SIDE MARKER LAMP (8W-51-5)
SPLICE S307 (8W-70-25)
Z1 18BK
Z1 18BK
Z1 18BK
Z1 18BK
Z1 18BK
C323
Z1 18BK
S404

CONNECTOR PIN OUTS

GENERAL INFORMATION

The pages referenced in this section show the connector, the circuits in the connector, and the pin that circuit occupies. Individual connector numbers are referenced on diagram pages throughout Group 8W.

CONNECTOR LOCATIONS

Component	Page
C101	8W-80-3
C102	8W-80-4
C103	8W-80-4
C104	8W-80-4
C105	8W-80-4
C106	8W-80-5
C107	8W-80-5
C108	8W-80-5
C109	8W-80-5
C110	8W-80-6
C111	8W-80-6
C112	8W-80-6
C113	8W-80-6
C114	8W-80-6
C115	8W-80-7
C116	8W-80-8
C117	8W-80-8
C118	8W-80-8
C119	8W-80-8
C120	8W-80-9
C121	8W-80-9
C122	8W-80-9
C123	8W-80-9
C124	8W-80-10
C125	8W-80-10
C126	8W-80-11
C127	8W-80-12
C128	8W-80-12
C129	8W-80-12
C130	8W-80-12
C131	8W-80-13
C132	8W-80-13
C133	8W-80-13
C134	8W-80-13
C135	8W-80-14
C136	8W-80-14
C137	8W-80-14
C138	8W-80-14
C139	8W-80-15
C140	8W-80-15
C141	8W-80-16
C142	8W-80-16
C143	8W-80-16
C144	8W-80-17
C145	8W-80-17
C146	8W-80-17
C147	8W-80-17
C148	8W-80-18
C149	8W-80-18
C150	8W-80-18
C151	8W-80-18
C152	8W-80-19
C153	8W-80-19
C154	8W-80-19
C155	8W-80-19
C156	8W-80-20
C157	8W-80-20
C158	8W-80-20
C159	8W-80-20
C160	8W-80-21
C201	8W-80-21
C202	8W-80-21
C203	8W-80-21
C204	8W-80-22
C205	8W-80-22
C206	8W-80-22
C207	8W-80-22
C208	8W-80-23
C209	8W-80-23
C210	8W-80-23
C211	8W-80-23
C212	8W-80-24
C213	8W-80-24
C214	8W-80-24
C215	8W-80-24
C216	8W-80-25
C217	8W-80-25
C218	8W-80-25
C219	8W-80-25
C220	8W-80-26
C221	8W-80-27
C222	8W-80-27
C223	8W-80-27
C224	8W-80-28
C225	8W-80-28
C228	8W-80-28
C229	8W-80-28
C230	8W-80-29
C231	8W-80-29
C232	8W-80-29
C233	8W-80-30
C234	8W-80-30
C235	8W-80-30
C236	8W-80-31

Component	Page
C237	8W-80-31
C238	8W-80-31
C239	8W-80-31
C240	8W-80-32
C241	8W-80-32
C242	8W-80-32
C243	8W-80-32
C244	8W-80-32
C245	8W-80-33
C246	8W-80-33
C247	8W-80-33
C248	8W-80-33
C249	8W-80-34
C301	8W-80-34
C302	8W-80-34
C303	8W-80-34
C304	8W-80-35
C305	8W-80-35
C306	8W-80-35
C307	8W-80-35
C308	8W-80-35
C309	8W-80-36
C310	8W-80-36
C311	8W-80-36
C312	8W-80-36
C313	8W-80-37
C314	8W-80-37
C315	8W-80-37
C316	8W-80-37
C317	8W-80-38
C318	8W-80-38
C319	8W-80-38
C320	8W-80-38
C321	8W-80-39
C322	8W-80-39
C323	8W-80-39
C324	8W-80-40
C325	8W-80-40
C326	8W-80-40
C327	8W-80-40
C328	8W-80-41
C329	8W-80-41
C330	8W-80-41
C331	8W-80-42
C332	8W-80-42
C333	8W-80-42
C334	8W-80-42
C335	8W-80-43
C336	8W-80-43
C337	8W-80-43
C338	8W-80-44
C339	8W-80-44
C340	8W-80-45
C341	8W-80-45
C342	8W-80-45
C343	8W-80-45
C344	8W-80-46
C345	8W-80-46
C346	8W-80-46
C347	8W-80-46
C348	8W-80-47
C349	8W-80-47
C350	8W-80-47
C351	8W-80-47
C352	8W-80-47
C353	8W-80-48
C354	8W-80-48
C355	8W-80-48
C356	8W-80-48
C358	8W-80-49
C359	8W-80-49
C360	8W-80-49
C401	8W-80-50
C402	8W-80-50
C403	8W-80-50
C404	8W-80-50
C405	8W-80-51
C406	8W-80-51
C407	8W-80-51
C408	8W-80-51
C409	8W-80-51
C410	8W-80-52
C411	8W-80-52
C412	8W-80-52
C413	8W-80-52
C414	8W-80-53
C415	8W-80-53
C416	8W-80-53
C417	8W-80-53
C418	8W-80-53
C419	8W-80-54
C420	8W-80-54
C421	8W-80-54
C422	8W-80-54
C423	8W-80-55
C424	8W-80-55
C425	8W-80-55
C426	8W-80-55

C101

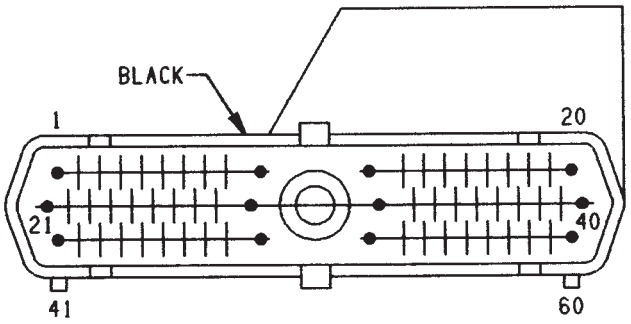

POWERTRAIN CONTROL MODULE

	CAV	CIRCUIT	FUNCTION
	1	K1 20DG/RD	MAP SENSOR SIGNAL
	2	K2 16TN/BK	ENGINE COOLANT TEMP SENSOR SIGNAL
	3	A14 14RD/WT	FUSED B(+)
	4	K4 18BK/LB	SENSOR GROUND
	5	Z11 16BK/WT	GROUND
	6	K6 20VT/WT	5—VOLT SUPPLY
	7	K7 18OR	8—VOLT SUPPLY
	8	—	—
	9	A21 14DB	IGN SWITCH OUTPUT (RUN/START)
	10	—	—
	11	Z12 16BK/TN	GROUND
	12	Z12 16BK/TN	GROUND
	13	K14 18LB/BR	INJECTOR #4 DRIVER
	14	K13 18YL/WT	INJECTOR #3 DRIVER
	15	K12 18TN	INJECTOR #2 DRIVER
	16	K11 18WT/DB	INJECTOR #1 DRIVER
	17	—	—
	18	—	—
	19	K19 18GY	IGNITION COIL #1 DRIVER
	20	K20 18DG	GENERATOR FIELD DRIVER
	21	K21 16BK/RD	INTAKE AIR TEMP SENSOR SIGNAL
	22	K22 18OR/DB	THROTTLE POSITION SENSOR SIGNAL
	23	—	—
	24	K24 18GY/BK	CRANKSHAFT POSITION SENSOR SIGNAL
	25	D21 20PK	SCI TRANSMIT
*	26	D1 20VT/BR	CCD BUS (+)
	27	C91 16LB	A/C CYCLING SWITCH SENSE
	28	C90 16LG	A/C PRESSURE SWITCH OUTPUT
	29	K29 18WT/PK	STOP LAMP SWITCH SENSE
	30	T41 18BR/YL	PARK/NEUTRAL POSITION SWITCH SENSE
	31	C27 20DB/PK	RADIATOR FAN RLY CONTROL
	32	G3 20BK/PK	MALFUNCTION INDICATOR LAMP DRIVER
	33	V36 20TN/RD	VEH SPEED CONTROL VACUUM SOL CONTROL
	34	C13 20DB/OR	A/C COMPRESSOR CLUTCH RELAY CONTROL
	35	—	—
	36	—	—
	37	—	—
	38	K15 18PK/BK	INJECTOR #5 DRIVER
	39	K39 18GY/RD	IDLE AIR CONTROL MOTOR #1 DRIVER
	40	K40 18BR/WT	IDLE AIR CONTROL MOTOR #3 DRIVER
	41	K41 18BK/DG	HEATED OXYGEN SENSOR SIGNAL
	42	—	—
	43	G21 20GY/LB	TACHOMETER SIGNAL
	44	K44 18TN/YL	CAMSHAFT POSITION SENSOR SIGNAL
	45	D20 20LG	SCI RECEIVE
*	46	D2 20WT/BK	CCD BUS (—)
	47	G7 20WT/OR	VEH SPEED SENSOR SIGNAL
	48	V31 20BR/RD	VEH SPEED CNTRL COAST/SET SW SENSE
	49	V32 20YL/RD	VEH SPEED CNTRL ON/OFF SW SENSE
	50	V33 20WT/LG	VEH SPEED CNTRL RESUME SW SENSE
	51	K51 20DB/YL	AUTOMATIC SHUT DOWN RELAY CONTROL
	52	—	—
	53	V35 20LG/RD	VEH SPEED CNTRL VENT SOLENOID CNTRL
	54	—	—
	55	—	—
	56	—	—
	57	A142 16DG/OR	AUTOMATIC SHUT DOWN RELAY OUTPUT
	58	K16 18LG/BK	INJECTOR #6 DRIVER
	59	K59 18VT/BK	IDLE AIR CONTROL MOTOR #4 DRIVER
	60	K60 18YL/BK	IDLE AIR CONTROL MOTOR #2 DRIVER

* — INDICATES TWISTED PAIR D1 & D2

C102

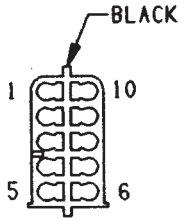

CAV	CIRCUIT
1	L3 14RD/OR
2	L3 14RD/OR
3	L61 18LG
4	L90 18DB/RD
5	Z1 16GY
6	L35 18BR/WT
7	L39 18LB
8	L60 18TN
9	L4 14VT/WT
10	F39 18PK/LG

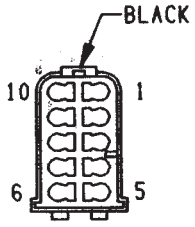

CAV	CIRCUIT
1	—
2	L3 16RD/OR
3	L61 18LG
3	L61 18LG
4	L90 18DB/RD
5	Z1 16BK
6	L35 18BR/WT
7	—
8	L60 18TN
8	L60 18TN
9	L4 16VT/WT
10	F39 14PK/LG

C103

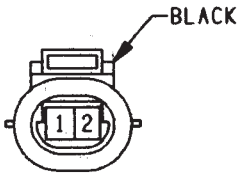

FRONT WASHER PUMP MOTOR

CAV	CIRCUIT	FUNCTION
1	Z1 18GY	GROUND
1	Z1 18GY	GROUND
2	V10 20BR	WINDSHIELD WASHER SWITCH OUTPUT

C104

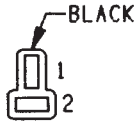

REAR WASHER PUMP MOTOR

CAV	CIRCUIT	FUNCTION
1	V20 18BK/WT	REAR WASHER PUMP MOTOR CONTROL
2	Z1 18GY	GROUND

C105

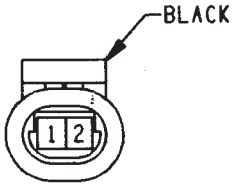

LOW WASHER FLUID LEVEL SWITCH

CAV	CIRCUIT	FUNCTION
1	G29 20BK/TN	WASHER FLUID SWITCH SENSE
2	F12 18DB/WT	FUSED IGNITION SWITCH OUTPUT

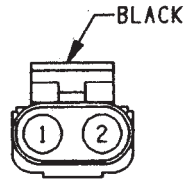

RADIATOR FAN MOTOR

C106

CAV	CIRCUIT	FUNCTION
1	C25 16LG	RADIATOR FAN RELAY OUTPUT
2	Z1 16GY	GROUND

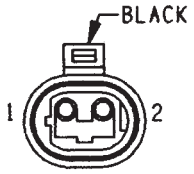

LEFT FRONT WHEEL SPEED SENSOR

C107

	CAV	CIRCUIT	FUNCTION
*	1	B9 18RD	LEFT FRONT WHEEL SPEED SENSOR (+)
*	2	B8 18RD/DB	LEFT FRONT WHEEL SPEED SENSOR (−)

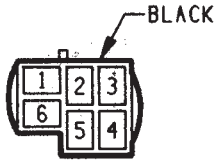

DATA LINK CONNECTOR

C108

CAV	CIRCUIT	FUNCTION
1	—	—
2	D20 20LG	SCI RECEIVE
3	—	—
4	F12 18DB/WT	FUSED IGNITION SWITCH OUTPUT
5	D21 20PK	SCI TRANSMIT
6	Z11 16BK/WT	GROUND

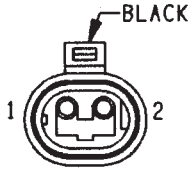

A/C LOW PRESSURE SWITCH

C109

CAV	CIRCUIT	FUNCTION
1	C21 16DB/OR	A/C SWITCH SENSE
2	C90 16LG	A/C PRESSURE SWITCH OUTPUT

* - INDICATES TWISTED PAIR

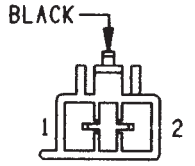

A/C AND HEATER BLOWER MOTOR

C110

CAV	CIRCUIT	FUNCTION
1	Z1 12GY	GROUND
2	C1 12DG	FUSED IGNITION SWITCH OUTPUT

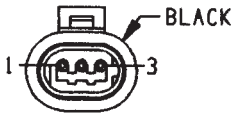

CRANKSHAFT POSITION SENSOR

C111

CAV	CIRCUIT	FUNCTION
1	K24 18GY/BK	CRANKSHAFT POSITION SENSOR SIGNAL
2	K4 18BK/LB	SENSOR GROUND
3	K7 18OR	8—VOLT SUPPLY

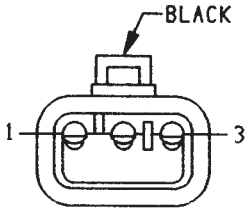

THROTTLE POSITION SENSOR

C112

CAV	CIRCUIT	FUNCTION
1	K4 18BK/LB	SENSOR GROUND
2	K22 18OR/DB	THROTTLE POSITION SENSOR SIGNAL
3	K6 20VT/WT	5—VOLT SUPPLY

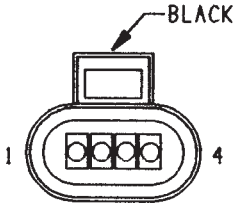

IDLE AIR CONTROL MOTOR

C113

CAV	CIRCUIT	FUNCTION
1	K39 18GY/RD	IDLE AIR CONTROL MOTOR DRIVER # 1
2	K60 18YL/BK	IDLE AIR CONTROL MOTOR DRIVER # 2
3	K40 18BR/WT	IDLE AIR CONTROL MOTOR DRIVER # 3
4	K59 18VT/BK	IDLE AIR CONTROL MOTOR DRIVER # 4

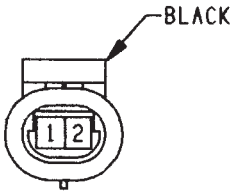

INTAKE AIR TEMPERATURE SENSOR

C114

CAV	CIRCUIT	FUNCTION
1	K21 16BK/RD	INTAKE AIR TEMPERATURE SENSOR SIGNAL
2	K4 16BK/LB	SENSOR GROUND

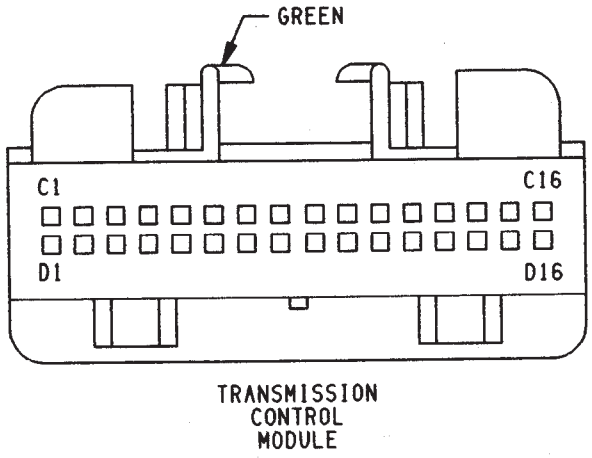

TRANSMISSION
CONTROL
MODULE

C115

CAV	CIRCUIT	FUNCTION
C1	—	—
C2	—	—
C3	T505 18TN/BK	TRANS OUTPUT SPEED SENSOR
C4	T137 16YL/BK	TRANS DATA LINK CONNECTOR
C5	—	—
C6	—	—
C7	—	—
C8	T506 18LG/BK	1-2 GEAR INPUT
C9	T507 18GY/BK	DRIVE GEAR INPUT
C10	K29 18WT/PK	STOP LAMP SWITCH SENSE
C11	T177 18TN	TRANS SWITCH POWER MODE
C12	—	—
C13	—	—
C14	T508 18WT/BK	SOLENOID S3 CONTROL
C15	T509 18VT/WT	SOLENOID S2 CONTROL
C16	T510 18DB/WT	SOLENOID S1 CONTROL
D1	—	—
D2	K22 18OR/DB	THROTTLE POS SENSOR SIGNAL
D3	K4 18BK/LB	SENSOR GROUND
D4	—	—
D5	—	—
D6	—	—
D7	Z12 18BK/TN	GROUND
D8	—	—
D9	—	—
D10	—	—
D11	—	—
D12	—	—
D13	—	—
D14	A14 14RD/WT	FUSED B(+)
D15	—	—
D16	T17 18YL	FUSED B(+)

C116

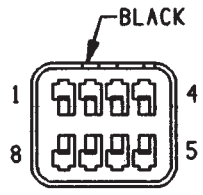

CAV	CIRCUIT
1	B1 18YL/DB
2	B517 18PK/OR
3	B516 18TN/WT
4	B515 18YL/WT
5	——
6	B4 18LG
7	B3 18LG/DB
8	B2 18YL

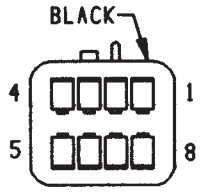

CAV	CIRCUIT
1	B1 18YL/DB
2	B517 18PK/OR
3	B516 18TN/WT
4	B515 18YL/VT
5	——
6	B4 18LG
7	B3 18LG/DB
8	B2 18YL

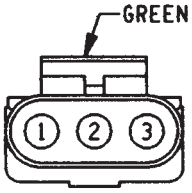

MAP SENSOR

C117

CAV	CIRCUIT	FUNCTION
1	K4 18BK/LB	SENSOR GROUND
2	K1 20DG/RD	MAP SENSOR SIGNAL
3	K6 20VT/WT	5—VOLT SUPPLY

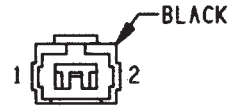

INJECTOR #6

C118

CAV	CIRCUIT	FUNCTION
1	K16 18LG/BK	INJECTOR #6 DRIVER
2	A142 16DG/OR	AUTOMATIC SHUT DOWN RELAY OUTPUT

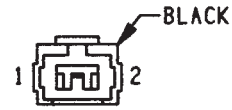

INJECTOR #5

C119

CAV	CIRCUIT	FUNCTION
1	K15 18PK/BK	INJECTOR #5 DRIVER
2	A142 16DG/OR	AUTOMATIC SHUT DOWN RELAY OUTPUT

C120

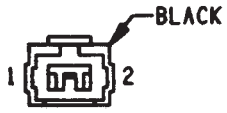

INJECTOR # 4

CAV	CIRCUIT	FUNCTION
1	K14 18LB/BR	INJECTOR # 4 DRIVER
2	A142 16DG/OR	AUTOMATIC SHUT DOWN RELAY OUTPUT

C121

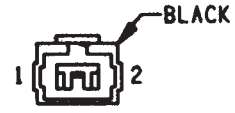

INJECTOR # 3

CAV	CIRCUIT	FUNCTION
1	K13 18YL/WT	INJECTOR # 3 DRIVER
2	A142 16DG/OR	AUTOMATIC SHUT DOWN RELAY OUTPUT

C122

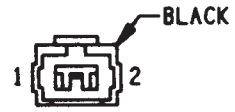

INJECTOR # 2

CAV	CIRCUIT	FUNCTION
1	K12 18TN	INJECTOR # 2 DRIVER
2	A142 16DG/OR	AUTOMATIC SHUT DOWN RELAY OUTPUT

C123

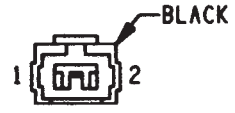

INJECTOR # 1

CAV	CIRCUIT	FUNCTION
1	K11 18WT/DB	INJECTOR # 1 DRIVER
2	A142 16DG/OR	AUTOMATIC SHUT DOWN RELAY OUTPUT

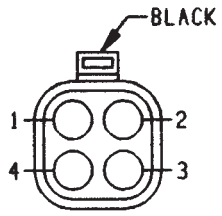

HEATED
OXYGEN
SENSOR

C124

CAV	CIRCUIT	FUNCTION
1	K4 18BK/LB	SENSOR GROUND
2	K41 18BK/DG	HEATED OXYGEN SENSOR SIGNAL
3	Z12 18BK/TN	GROUND
4	A141 14DG/WT	FUEL PUMP RELAY OUTPUT

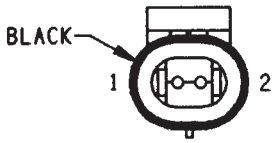

ENGINE COOLANT
TEMPERATURE SENSOR

C125

CAV	CIRCUIT	FUNCTION
1	K2 16TN/BK	ENGINE COOLANT TEMP SENSOR SIGNAL
2	K4 16BK/LB	SENSOR GROUND

C126

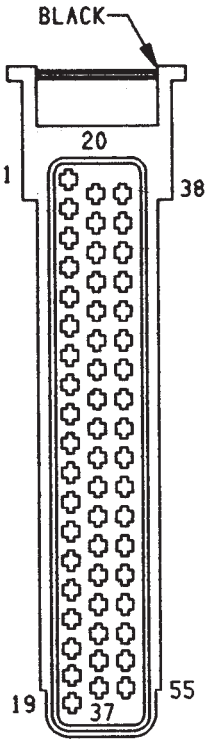

ANTI-LOCK
BRAKE SYSTEM
(ABS) CONTROL MODULE

	CAV	CIRCUIT	FUNCTION
	1	Z1 14GY	GROUND
	2	B243 16DG/BK	LEFT FRONT DUMP VALVE CONTROL
	3	B235 14GY/YL	ABS POWER RELAY OUTPUT
	4	—	—
	5	—	—
	6	—	—
	7	—	—
	8	—	—
	9	—	—
	10	—	—
	11	—	—
	12	—	—
	13	—	—
	14	—	—
	15	B116 18GY	PUMP/MOTOR RELAY CONTROL
	16	B210 18RD/BK	PEDAL TRAVEL SENSOR JUMPER
	17	—	—
	18	—	—
	19	Z1 14GY	GROUND
	20	B245 16WT/LG	LEFT FRONT ISOLATION VALVE CONTROL
	21	B248 16DG/WT	RIGHT FRONT DUMP VALVE CONTROL
	22	—	—
*	23	D1 18VT/BR	CCD BUS (+)
	24	—	—
	25	B515 18YL/VT	G-SENSOR #1 SENSE
	26	B517 18PK/OR	G-SENSOR GROUND
*	27	B1 18YL/DB	RIGHT REAR WHEEL SPEED SENSOR (−)
*	28	B3 18LG/DB	LEFT REAR WHEEL SPEED SENSOR (−)
*	29	B6 18WT/DB	RIGHT FRONT WHEEL SPEED SENSOR (−)
*	30	B8 18RD/DB	LEFT FRONT WHEEL SPEED SENSOR (−)
*	31	B219 18DB	PUMP/MOTOR SPEED SENSOR (−)
	32	L50 18WT/TN	STOP LAMP SWITCH OUTPUT
	33	B235 14GY/YL	ABS POWER RELAY OUTPUT
	34	B207 18PK	ABS POWER RELAY CONTROL
	35	—	—
	36	B254 16DG/OR	REAR DUMP VALVE CONTROL
	37	—	—
	38	B249 16WT/TN	RIGHT FRONT ISOLATION VALVE CONTROL
	39	—	—
	40	—	—
	41	B210 18RD/BK	PEDAL TRAVEL SENSOR JUMPER
*	42	D2 18WT/BK	CCD BUS (−)
	43	B516 18TN/WT	G-SENSOR #2 SENSE
	44	—	—
*	45	B2 18YL	RIGHT REAR WHEEL SPEED SENSOR (+)
*	46	B4 18LG	LEFT REAR WHEEL SPEED SENSOR (+)
*	47	B7 18WT	RIGHT FRONT WHEEL SPEED SENSOR (+)
*	48	B9 18RD	LEFT FRONT WHEEL SPEED SENSOR (+)
*	49	B220 18TN	PUMP/MOTOR SPEED SENSOR (+)
	50	—	—
	51	—	—
	52	B205 18VT	ABS LAMP DRIVER
	53	B236 18LG/YL	FUSED IGNITION SWITCH OUTPUT
	54	B251 16WT/BK	REAR INLET VALVE CONTROL
	55	—	—

*—INDICATES TWISTED PAIRS (B1 & B2, B3 & B4, B6 & B7, B8 & B9, D1 & D2)

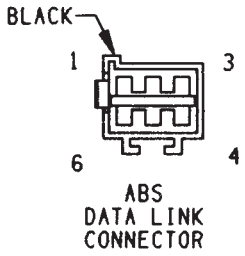

ABS
DATA LINK
CONNECTOR

C127

	CAV	CIRCUIT	FUNCTION
*	1	D2 18WT/BK	CCD BUS (−)
**	1	D2 20WT/BK	CCD BUS (−)
	2	F39 18PK/LG	FUSED B (+)
	3	—	—
*	4	D1 18VT/BR	CCD BUS (+)
**	4	D1 20VT/BR	CCD BUS (+)
	5	T137 16YL/BK	AUTO TRANS DATA LINK
	6	Z12 18BK/TN	GROUND

* AND ** -INDICATES TWISTED PAIRS

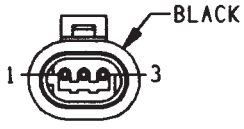

CAMSHAFT
POSITION
SENSOR

C128

CAV	CIRCUIT	FUNCTION
1	K44 18TN/YL	CAMSHAFT POSITION SENSOR SIGNAL
2	K4 18BK/LB	SENSOR GROUND
3	K7 18OR	8—VOLT SUPPLY

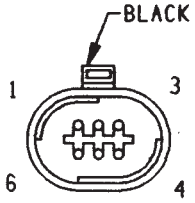

C129

CAV	CIRCUIT
1	G107 20BK/RD
2	K4 18BK/LB
3	G7 20WT/OR
4	Z1 18GY
5	—
6	K7 18OR

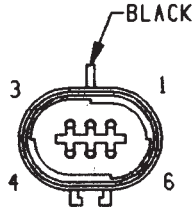

CAV	CIRCUIT
1	X4 18GY/ORRD
2	K4 18BK/LB
3	G7 18WT/OR
4	Z1 18GY
5	—
6	K7 18OR

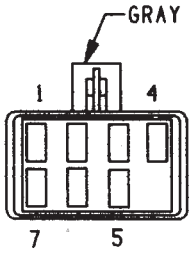

VALVE BODY
SOLENOIDS

C130

CAV	CIRCUIT	FUNCTION
1	G107 20BK/RD	4WD SENSE
2	T510 18DB/WT	SOLENOID S1 CONTROL
3	T509 18VT/WT	SOLENOID S2 CONTROL
4	T508 18WT/BK	SOLENOID S3 CONTROL
5	T505 18TN/BK	TRANSMISSION OUTPUT SPEED SENSOR
6	Z12 18BK/TN	GROUND
7	G106 20BK/YL	4WD INDICATOR LAMP

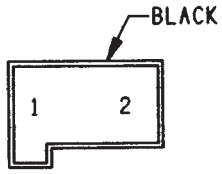

DIODE

C131

CAV	CIRCUIT	FUNCTION
1	B235 14GY/YL	ABS POWER RELAY OUTPUT
2	B205 18VT	ABS LAMP DRIVER

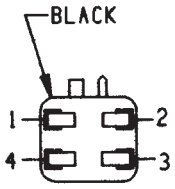

C132

CAV	CIRCUIT
1	V33 20WT/LG
2	V32 20YL/RD
3	V31 20BR/RD
4	F12 18DB/WT

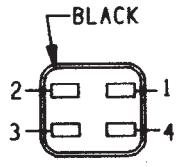

CAV	CIRCUIT
1	V33 20WT/LG
2	V32 20YL/RD
3	V31 20BR/RD
4	V34 20WT/RD

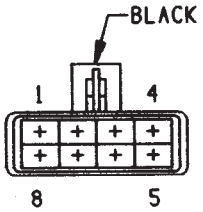

PARK/NEUTRAL POSITION SWITCH

C133

CAV	CIRCUIT	FUNCTION
1	T506 18LG/BK	1-2 GEAR INPUT
2	T507 18GY/BK	DRIVE GEAR INPUT
3	—	—
4	L10 18BR/LG	BACK-UP LAMP SWITCH OUTPUT
5	—	—
6	Z12 18BK/TN	GROUND
7	T41 18BR/YL	PARK/NEUTRAL POSITION SWITCH SENSE
8	F12 18DB/WT	FUSED IGNITION SWITCH OUTPUT

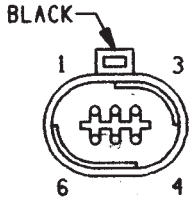

FRONT WIPER MOTOR

C134

CAV	CIRCUIT	FUNCTION
1	—	—
2	V55 18TN/RD	WIPER PARK SWITCH SENSE
3	F86 18LG/BK	FUSED IGNITION SWITCH OUTPUT
4	Z1 16GY	GROUND
5	V3 18BR/WT	WIPER SWITCH LOW SPEED OUTPUT
6	V4 18RD/YL	WIPER SWITCH HIGH SPEED OUTPUT

C135

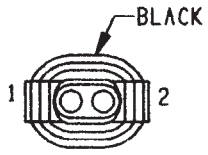

BRAKE
WARNING SWITCH

CAV	CIRCUIT	FUNCTION
1	G9 20GY/BK	BRAKE WARNING LAMP DRIVER
2	G9 20GY/WT	BRAKE WARNING LAMP DRIVER

C136

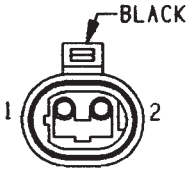

RIGHT FRONT
WHEEL SPEED
SENSOR

	CAV	CIRCUIT	FUNCTION
*	1	B7 18WT	RIGHT FRONT WHEEL SPEED SENSOR (+)
*	2	B6 18WT/DB	RIGHT FRONT WHEEL SPEED SENSOR (−)

C137

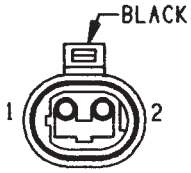

UNDERHOOD
LAMP

CAV	CIRCUIT	FUNCTION
1	Z1 18GY	GROUND
2	A7 18RD/BK	FUSED B(+)

C138

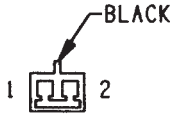

CAV	CIRCUIT
1	G31 18VT/LG
2	G32 18BK/LB

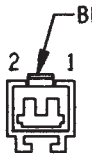

CAV	CIRCUIT
1	G31 20VT/LG
2	G32 20BK/LB

* - INDICATES TWISTED PAIR

C139

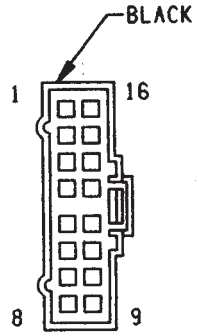

CAV	CIRCUIT
1	C1 12DG
2	G21 20GY/LB
3	L10 18BR/LG
4	F86 18LG/BK
5	G6 20GY/YL
6	G20 18VT/YL
6	G20 20VT/YL
7	L50 18WT/TN
8	A7 12RD/YL
9	B205 18YL
10	L4 16VT/WT
11	G7 18WT/OR
12	Z2 18BK/OR
12	Z2 18BK/OR
13	V30 20DB/RD
14	V11 18BK/TN
15	L9 16BK/WT
15	L9 16BK/WT
16	A1 12RD

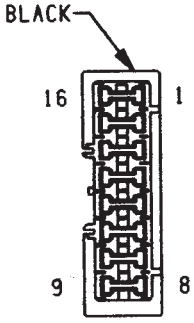

CAV	CIRCUIT
1	C1 12DG
2	G21 20GY/LB
3	L10 18BR/LG
4	F86 18LG/BK
5	G6 20GY
6	G20 20VT/YL
7	L50 18WT/TN
8	A7 12RD/BK
9	B205 18VT
10	L4 14VT/WT
11	G7 20WT/OR
12	Z2 16BK/OR
13	V30 20DB/RD
14	—
15	L9 18BK/WT
16	A1 10RD

C140

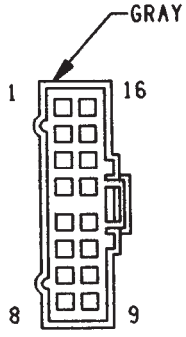

CAV	CIRCUIT	
1	G9 18GY/BK	
1	G9 18GY/BK	
2	V20 18BK//WT	
2	V20 18BK//WT	
3	L90 18DB/RD	
3	L90 18DB/RD	W/O ABS
4	L35 16BR/WT	W/O ABS
4	—	W/ABS
5	C21 16LB	
6	C90 16LG/WT	
7	C91 16DB/OR	
8	A21 12YL	
9	L3 16RD/OR	
9	L3 16RD/OR	
10	B236 18LB/YL	
11	G9 20GY/BK	
12	X2 16DG/RD	
13	V32 20YL/RD	
14	L61 18LG/YL	W/ABS
14	L61 18LG/YL	W/ABS
14	L61 18LG	W/O ABS
14	L61 18LG	W/O ABS
15	L60 18WT/BL	W/ABS
15	L60 18WT/BL	W/ABS
15	L60 18TN	W/O ABS
15	L60 18TN	W/O ABS
16	A3 12RD/WT	

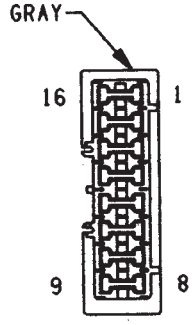

CAV	CIRCUIT
1	G9 20GY/BK
2	V20 18BK/WT
3	L90 18DB/RD
4	L35 18BR/WT
5	C21 16DB/OR
6	C90 16LG
7	C91 16LB
8	A21 12DB
9	L3 14RD/OR
10	B236 18LG/YL
10	B236 18LG/YL
11	G9 20GY/WT
12	X2 18DG/RD
12	X2 18DG/RD
13	V32 20YL/RD
14	L61 18LG
15	L60 18TN
16	A3 12RD/WT

C141

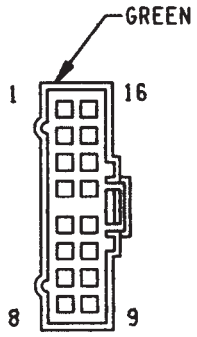

CAV	CIRCUIT	
1	V55 18TN/RD	
2	T177 20TN	
3	G107 20BK/RD	
4	G106 20BK/YL	
5	V10 18BR	
6	V3 18BR/WT	
7	V4 18RD/YL	
8	124 20VT/YL	W/ABS
8	L39 16LB	W/O ABS
9	T17 20YL	
10	A241 14DB/TN	
11	125 20TN/OR	W/ABS
11	G3 20BK/PK	W/O ABS
12	K29 18WT/PK	
13	M1 18PK	
14	G29 20BK/TN	
15	A41 14YL/WT	
16	A4 12BK/PK	

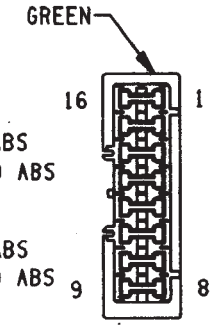

CAV	CIRCUIT
1	V55 18TN/RD
2	T177 18TN
3	G107 20BK/RD
3	G107 20BK/RD
4	G106 20BK/YL
5	V10 20BR
6	V3 18BR/WT
7	V4 18RD/YL
8	L39 18LB
9	T17 18YL
10	A141 14DG/WT
11	G3 20BK/PK
12	K29 18WT/PK
13	A7 14RD/BK
14	G29 20BK/TN
15	A41 14YL
16	A4 12BK/PK

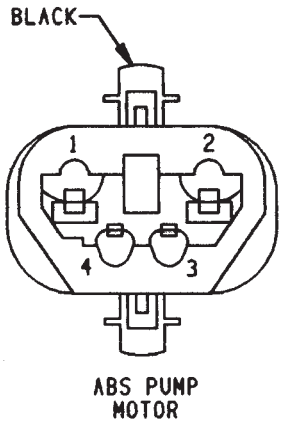

ABS PUMP MOTOR

C142

	CAV	CIRCUIT	FUNCTION
	1	B233 12TN/BK	PUMP/MOTOR RELAY OUTPUT
	2	Z12 12BK/TN	GROUND
*	3	B219 18DB	PUMP/MOTOR SPEED SENSOR (−)
*	4	B220 18TN	PUMP/MOTOR SPEED SENSOR (+)

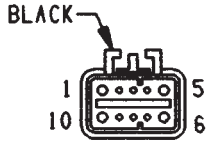

ABS HYDRAULIC ACTUATION UNIT

C143

CAV	CIRCUIT	FUNCTION
1	—	—
2	B245 16WT/LG	LEFT FRONT ISOLATION VALVE CONTROL
3	B249 16WT/TN	RIGHT FRONT ISOLATION VALVE CONTROL
4	B251 16WT/BK	REAR INLET VALVE CONTROL
5	B235 14GY/YL	ABS POWER RELAY OUTPUT
6	—	—
7	B254 16DG/OR	REAR DUMP VALVE CONTROL
8	B248 16DG/WT	RIGHT FRONT DUMP VALVE CONTROL
9	B243 16DG/BK	LEFT FRONT DUMP VALVE CONTROL
10	B235 14GY/YL	ABS POWER RELAY OUTPUT

* — INDICATES TWISTED PAIR (B219 & B220)

C144

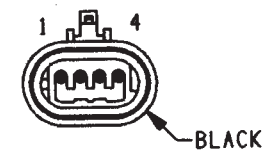

VEHICLE SPEED
CONTROL SERVO

CAV	CIRCUIT	FUNCTION
1	Z1 18GY	GROUND
2	V30 20DB/RD	VEH SPEED CONTROL BRAKE SW OUTPUT
3	V35 20LG/RD	VEHICLE SPEED CTRL VENT SOL CONTROL
4	V36 20TN/RD	VEHICLE SPEED CTRL VACUUM SOL CONTROL

C145
POWER DISTRIBUTION CENTER
(8W-11-2)

C146

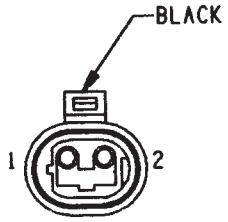

CAV	CIRCUIT
1	G32 18BK/LB
2	G31 18VT/LG

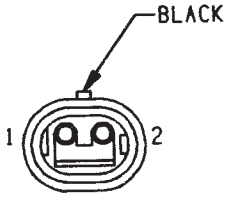

CAV	CIRCUIT
1	G32 18BK/LB
2	G31 18VT/LG

C147

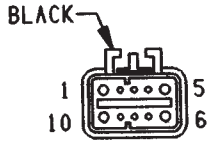

CAV	CIRCUIT
1	—
2	—
3	—
4	K19 18BK/GY
5	—
6	—
7	G6 20GY
8	—
9	K20 18DG
10	A142 14DG/OR

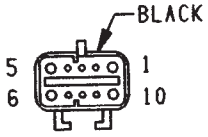

CAV	CIRCUIT
1	—
2	—
3	—
4	K19 18BK/GY
5	—
6	—
7	G6 18GY
8	—
9	K20 18DG
10	A142 16DG/OR

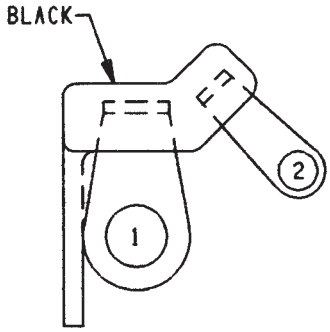

ENGINE STARTER MOTOR

C148

CAV	CIRCUIT	FUNCTION
1	A0 6RD	B (+)
2	T40 14LG/BK	ENGINE STARTER MOTOR RELAY OUTPUT

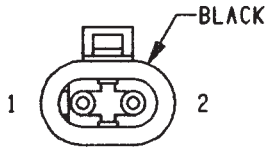

ENGINE OIL PRESSURE SENDING UNIT

C149

CAV	CIRCUIT	FUNCTION
1	—	—
2	G6 18GY	ENGINE OIL PRESSURE SWITCH SENSE

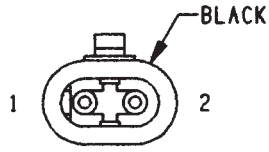

DISTRIBUTOR IGNITION COIL

C150

CAV	CIRCUIT	FUNCTION
1	A142 16DG/OR	AUTOMATIC SHUT DOWN RELAY OUTPUT
2	K19 18BK/GY	IGNITION COIL #1 DRIVER

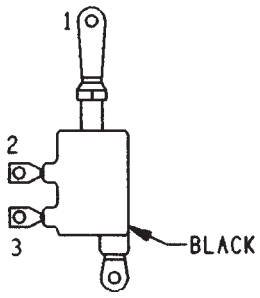

GENERATOR

C151

CAV	CIRCUIT	FUNCTION
1	Z0 8BK	GROUND
2	A142 18DG/OR	AUTOMATIC SHUT DOWN RELAY OUTPUT
3	K20 18DG	GENERATOR FIELD DRIVER

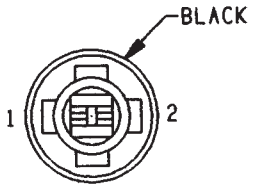

RIGHT SIDE
MARKER LAMP

C152

CAV	CIRCUIT	FUNCTION
1	L90 18DB/RD	PARK LAMP SWITCH OUTPUT
2	L60 18TN	RIGHT TURN SIGNAL

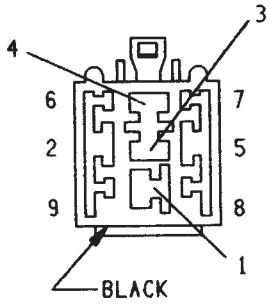

FOG LAMP
RELAY

C153

CAV	CIRCUIT	FUNCTION
1	F39 14PK/LG	FUSED B (+)
2	Z1 18BK	GROUND
3	—	—
4	117 14LG/BK	FOG LAMP SWITCH OUTPUT
5	L35 18BR/WT	PARK LAMP RELAY CONTROL
6	—	—
7	—	—
8	—	—
9	—	—

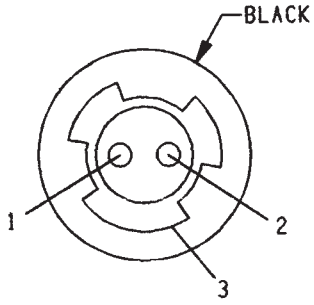

LEFT PARK AND
TURN SIGNAL LAMP

C154

CAV	CIRCUIT	FUNCTION
1	L90 18DB/RD	PARK LAMP SWITCH OUTPUT
2	L61 18LG	LEFT TURN SIGNAL
3	Z1 18BK	GROUND

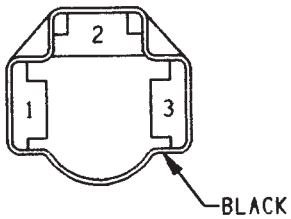

LEFT
HEADLAMP

C155

CAV	CIRCUIT	FUNCTION
1	L3 16RD/OR	DIMMER SWITCH HIGH BEAM OUTPUT
1	L3 16RD/OR	DIMMER SWITCH HIGH BEAM OUTPUT
2	L4 16VT/WT	DIMMER SWITCH LOW BEAM OUTPUT
2	L4 16VT/WT	DIMMER SWITCH LOW BEAM OUTPUT
3	Z1 18BK	GROUND

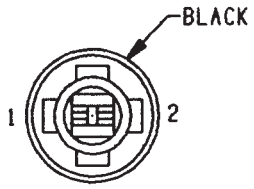

LEFT SIDE
MARKER LAMP

C156

CAV	CIRCUIT	FUNCTION
1	L90 18DB/RD	PARK LAMP SWITCH OUTPUT
2	L61 18LG	LEFT TURN SIGNAL

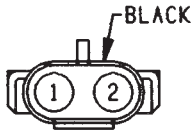

LEFT
FOG LAMP

C157

CAV	CIRCUIT	FUNCTION
1	117 14LG/BK	FOG LAMP RELAY OUTPUT
2	Z1 16BK	GROUND

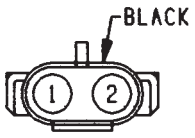

RIGHT
FOG LAMP

C158

CAV	CIRCUIT	FUNCTION
1	117 14LG/BK	FOG LAMP RELAY OUTPUT
2	Z1 16BK	GROUND

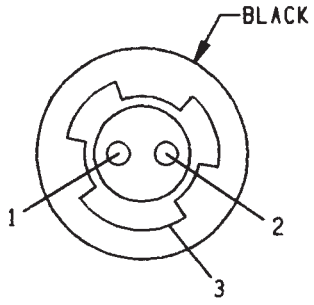

RIGHT PARK AND
TURN SIGNAL LAMP

C159

CAV	CIRCUIT	FUNCTION
1	L90 18DB/RD	PARK LAMP SWITCH OUTPUT
2	L60 18TN	RIGHT TURN SIGNAL
3	Z1 18BK	GROUND

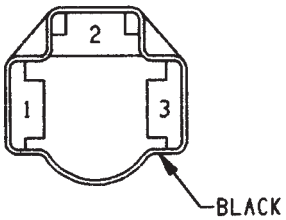

RIGHT
HEADLAMP

C160

CAV	CIRCUIT	FUNCTION
1	L3 16RD/OR	DIMMER SWITCH HIGH BEAM OUTPUT
2	L4 16VT/WT	DIMMER SWITCH LOW BEAM OUTPUT
3	Z1 18BK	GROUND

C201

FUSE BLOCK
(8W-10-2)

C202

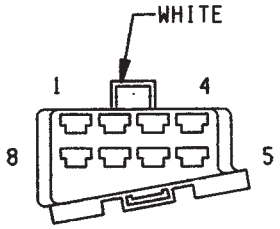

CHIME/BUZZER
MODULE

CAV	CIRCUIT	FUNCTION
1	F87 20WT/BK	FUSED IGNITION SWITCH OUTPUT
1	F87 20WT/BK	FUSED IGNITION SWITCH OUTPUT
2	G11 20WT/OR	PARK BRAKE SWITCH SENSE
3	Z1 14BK	GROUND
3	Z1 18BK	GROUND
4	G10 18LG/RD	SEAT BELT SWITCH SENSE
5	—	—
6	M11 20PK/LB	COURTESY LAMP SWITCH OUTPUT
7	L7 18BK/YL	FUSED B(+)
8	—	—

C203

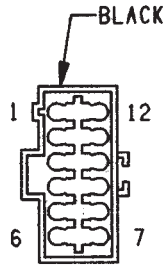

CAV	CIRCUIT
1	L60 18TN
2	L90 18DB/RD
3	L10 18BR/LG
4	M2 18YL
4	M2 18YL
5	L35 18BR/WT
6	L50 18WT/TN
7	G9 20GY/BK
8	P38 200R/WT
9	A241 14DG/TN
10	G4 20DB
11	Z1 14BK
12	E2 200R

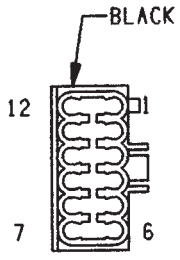

CAV	CIRCUIT	
1	L60 18WT/BL	W/ABS
1	L60 18TN	W/O ABS
2	L90 18DB/RD	
2	L90 18DB/RD	W/O ABS
3	L10 18BR/LG	
4	M2 20YL	
5	L35 16BR/WT	
6	L50 18WT/TN	
7	G9 18GY/BK	
8	P38 180G/TN	
9	A241 14DG/TN	
10	G4 20DB	
11	Z1 14BK	
12	E2 200R/BK	

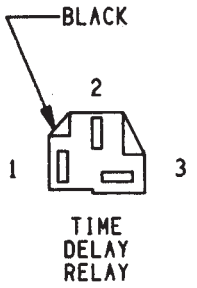

TIME DELAY RELAY

C204

CAV	CIRCUIT	FUNCTION
1	M2 20YL	PANEL LAMPS DRIVER
2	M50 20YL/RD	KEY-IN LAMP DRIVER
3	M1 20PK	FUSED B(+)

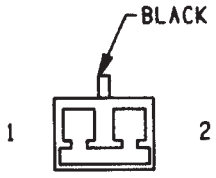

RIGHT COURTESY LAMP

C205

CAV	CIRCUIT	FUNCTION
1	M1 20PK	FUSED B(+)
2	M2 20YL	COURTESY LAMP DRIVER

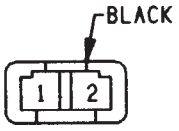

RIGHT INSTRUMENT PANEL SPEAKER

C206

CAV	CIRCUIT	FUNCTION
1	X54 20VT	RIGHT FRONT SPEAKER (+)
1	X54 18VT	RIGHT FRONT SPEAKER (+)
2	X56 20DB/RD	RIGHT FRONT SPEAKER (–)
2	X56 18DB/RD	RIGHT FRONT SPEAKER (–)

C207

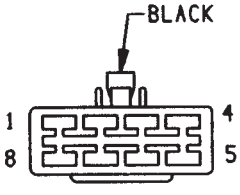

CAV	CIRCUIT
1	P36 20PK/VT
2	P35 200R/VT
3	P34 18PK/BK
4	P2 18BK/WT
5	F81 12TN
6	P60 20BR/WT
7	Z1 14BK
7	Z1 20BK
8	—

W/O ABS

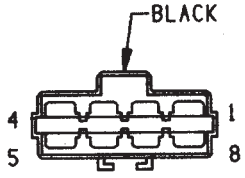

CAV	CIRCUIT
1	P36 20PK/VT
1	P36 20PK/VT
2	P35 200R/VT
2	P35 200R/VT
3	P34 18PK/BK
3	P34 18PK/BK
4	P2 18BK/WT
4	P2 18BK/WT
5	F81 12TN
6	P60 20BR/WT
7	Z1 14BK
8	—

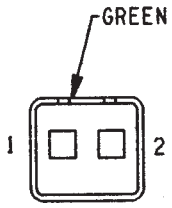

CAV	CIRCUIT
1	X56 20DB/RD
2	X54 20VT

C208

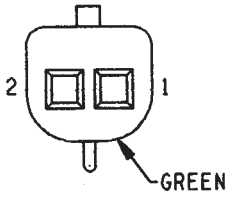

CAV	CIRCUIT
1	X56 20DB/RD
2	X54 20VT

C209

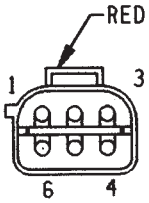

CAV	CIRCUIT
1	—
2	F87 20WT/BK
3	—
4	Z1 20BK
5	M1 20PK
6	M2 20YL

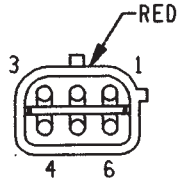

CAV	CIRCUIT
1	—
2	—
3	—
4	Z1 20BK
5	M1 20PK
6	M2 20YL

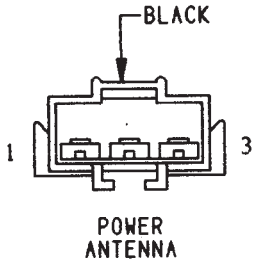

C210

CAV	CIRCUIT	FUNCTION
1	X14 18WT/GY	POWER ANTENNA DOWN
2	X13 18BK/RD	POWER ANTENNA UP
3	X17 18GY/BK	GROUND

C211

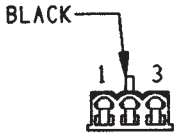

CAV	CIRCUIT
1	Z1 20BK
2	G26 20LB
2	G26 20LB
3	M2 20YL



CAV	CIRCUIT
1	Z1 20BK
2	G26 20LB
3	M2 20YL

C212

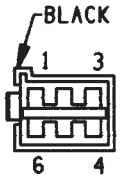

CAV	CIRCUIT
1	G32 20BK/LB
2	L90 18DB/RD
2	L90 18DB/RD
3	E2 200R/BK
4	G31 20VT/LG
5	Z2 18BK/OR
6	—

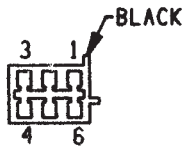

CAV	CIRCUIT
1	G32 20VT/LG
2	L90 20DB/RD
3	E2 200R/BK
4	G31 20BK/LB
5	Z2 20BK/LG
6	—

C213

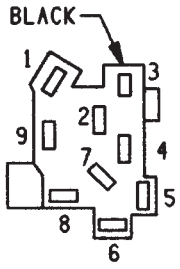

HEADLAMP SWITCH

CAV	CIRCUIT	FUNCTION
1	E2 200R/BK	FUSED PANEL LAMPS DIMMER SW SIGNAL
1	E2 200R/BK	FUSED PANEL LAMPS DIMMER SW SIGNAL
2	F34 12TN/BK	FUSED B(+)
3	M2 20YL	COURTESY LAMP DRIVER
4	L7 18BK/YL	FUSED B(+)
4	L7 18BK/YL	FUSED B(+)
5	G26 20LB	KEY—IN IGNITION SWITCH SENSE
6	M11 20PK/LB	COURTESY LAMP SWITCH OUTPUT
6	M11 20PK/LB	COURTESY LAMP SWITCH OUTPUT
7	—	—
8	A3 12RD/WT	FUSED B(+)
9	L90 18DB/RD	PARK LAMP SWITCH OUTPUT
9	L90 18DB/RD	PARK LAMP SWITCH OUTPUT

C214

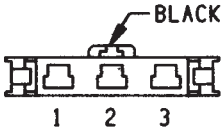

FOG LAMP SWITCH

CAV	CIRCUIT	FUNCTION	
1	Z1 20BK	GROUND	
1	Z1 20BK	GROUND	W/ABS
2	F34 12TN/BK	FUSED B(+)	
3	L35 16BR/WT	FOG LAMP SWITCH CONTROL	

CAV	CIRCUIT	FUNCTION	
1	L39 16LB	FOG LAMP SWITCH OUTPUT	
2	L35 16BR/WT	FOG LAMP SWITCH CONTROL	W/O ABS
3	Z1 20BK	GROUND	
3	Z1 20BK	GROUND	

C215

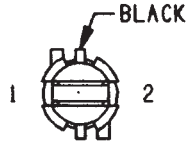

FOG LAMP ILLUMINATION

CAV	CIRCUIT	FUNCTION
1	E2 200R/BK	PANEL LAMPS DRIVER
2	Z1 20BK	GROUND

J958W-13

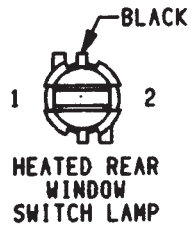

HEATED REAR WINDOW SWITCH LAMP

C216

CAV	CIRCUIT	FUNCTION
1	E2 200R/BK	PANEL LAMPS DRIVER
2	Z1 20BK	GROUND

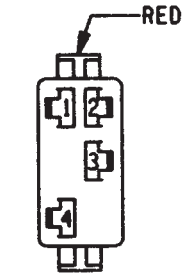

HEATED REAR WINDOW SWITCH

C217

CAV	CIRCUIT	FUNCTION
1	—	—
2	Z1 20BK	GROUND
2	Z1 20BK	GROUND
3	C80 18DB/WT	HEATED REAR WINDOW RELAY CONTROL
4	C15 12BK/WT	HEATED REAR WINDOW RELAY OUTPUT

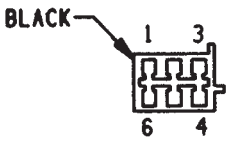

STOP LAMP SWITCH

C218

CAV	CIRCUIT	FUNCTION
1	V32 20YL/RD	VEH SPEED CONTROL ON/OFF SW SENSE
2	L50 18WT/TN	STOP LAMP SWITCH OUTPUT
2	L50 18WT/TN	STOP LAMP SWITCH OUTPUT
3	K29 18WT/PK	BRAKE SWITCH SENSE
4	Z1 18BK	GROUND
5	L9 16PK/BK	FUSED B(+)
6	V30 20DB/RD	VEH SPEED CONTROL BRAKE SW OUTPUT

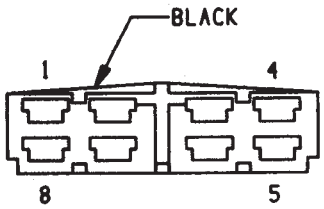

HEADLAMP DELAY MODULE

C219

CAV	CIRCUIT	FUNCTION
1	F87 20WT/BK	FUSED IGNITION SWITCH OUTPUT
1	F87 20WT/BK	FUSED IGNITION SWITCH OUTPUT
2	F34 12TN/BK	HEADLAMP SWITCH OUTPUT
3	Z1 18BK	GROUND
3	Z1 18BK	GROUND (W/O ABS)
4	X4 16GY/OR	FUSED B(+)
4	X4 16GY/OR	FUSED B(+)
5	—	—
6	—	—
7	—	—
8	—	—

C220

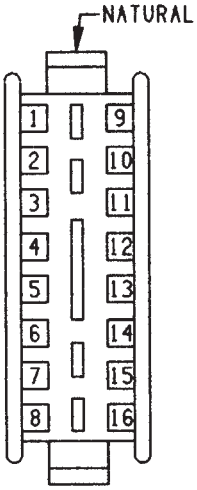

TELLTALE CONNECTOR

WITH ABS

CAV	CIRCUIT	FUNCTION
1	G107 20BK/RD	4WD SWITCH OUTPUT
2	—	—
3	F87 20WT/BK	FUSED IGNITION SWITCH OUTPUT
3	F87 20WT/BK	FUSED IGNITION SWITCH OUTPUT
4	F87 20WT/BK	FUSED IGNITION SWITCH OUTPUT
4	F87 20WT/BK	FUSED IGNITION SWITCH OUTPUT
5	G106 20BK/YL	4WD INDICATOR LAMP
6	G9 18GY/BK	BRAKE WARNING LAMP DRIVER
7	F87 20WT/BK	FUSED IGNITION SWITCH OUTPUT
7	F87 20WT/BK	FUSED IGNITION SWITCH OUTPUT
8	124 20VT/YL	FOG LAMPS SWITCH OUTPUT
9	B205 18YL	ABS LAMP DRIVER
10	125 20TN/OR	MALFUNCTION INDICATOR LAMP DRIVER
11	—	—
12	Z1 20BK	GROUND
12	Z1 20BK	GROUND
13	L68 18DG	HAZARD WARNING INDICATOR LAMP
14	G29 20BK/TN	WASHER FLUID SWITCH SENSE
15	L90 18DB/RD	PARK LAMP SWITCH OUTPUT
15	L90 18DB/RD	PARK LAMP SWITCH OUTPUT
16	G11 20WT/OR	SEAT BELT WARNING LAMP DRIVER

WITHOUT ABS

CAV	CIRCUIT	FUNCTION
1	Z1 20BK	GROUND
1	Z1 20BK	GROUND
2	G11 20WT/OR	SEAT BELT WARNING LAMP DRIVER
3	—	—
4	—	—
5	G107 20BK/RD	4WD SWITCH OUTPUT
6	G106 20BK/YL	4WD INDICATOR LAMP
7	—	—
8	—	—
9	G9 18GY/BK	BRAKE WARNING LAMP DRIVER
10	—	—
11	B205 18YL	ABS LAMP DRIVER
10	—	—
11	—	—
12	—	—
13	F87 20WT/BK	FUSED IGNITION SWITCH OUTPUT
13	F87 20WT/BK	FUSED IGNITION SWITCH OUTPUT
14	F87 20WT/BK	FUSED IGNITION SWITCH OUTPUT
14	F87 20WT/BK	FUSED IGNITION SWITCH OUTPUT
15	G3 20BK/PK	MALFUNCTION INDICATOR LAMP DRIVER
16	G29 20BK/TN	WASHER FLUID SWITCH SENSE

C221

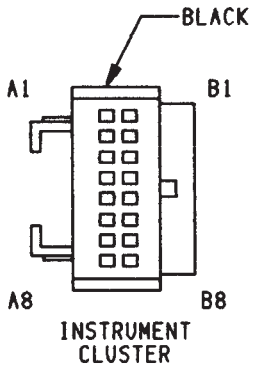

INSTRUMENT CLUSTER

CAV	CIRCUIT	FUNCTION
A1	G20 18VT/YL	ECT GAUGE SENSOR SIGNAL
A2	L61 18LG/YL	LEFT TURN SIGNAL (W/ABS)
A2	L61 18LG	LEFT TURN SIGNAL (W/O ABS)
A3	Z1 20BK	GROUND
A4	L3 16RD/OR	DIMMER SWITCH HIGH BEAM OUTPUT
A5	G21 20GY/LB	TACHOMETER SIGNAL
A6	E2 200R/BK	PANEL LAMPS DRIVER
A7	F87 20WT/BK	FUSED IGNITION SWITCH OUTPUT
A8	—	—
B1	G4 20DB	FUEL LEVEL SENSOR SIGNAL
B2	Z2 18BK/OR	GROUND
B3	—	—
B4	—	—
B5	—	—
B6	G7 18WT/OR	VEHICLE SPEED SENSOR SIGNAL
B7	L60 18WT/BL	RIGHT TURN SIGNAL (W/ABS)
B7	L60 18TN	RIGHT TURN SIGNAL (W/O ABS)
B8	G6 20GY/YL	ENGINE OIL PRESSURE SWITCH SENSE

C222

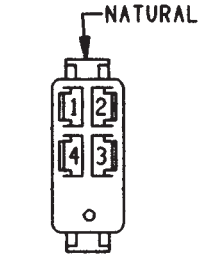

REAR WIPER/WASHER SWITCH

CAV	CIRCUIT	FUNCTION
1	V20 18BK/WT	REAR WASHER PUMP MOTOR CONTROL
2	V13 18BR/LG	REAR WASHER RUN
3	F20 18WT	FUSED IGNITION SWITCH OUTPUT
4	V15 18LB/RD	WINDSHIELD WASHER RELAY CONTROL

C223

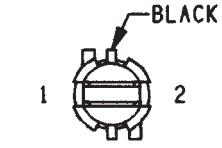

REAR WIPER/WASHER SWITCH LAMP

CAV	CIRCUIT	FUNCTION
1	E2 200R/BK	PANEL LAMPS DRIVER
2	Z1 20BK	GROUND

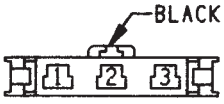

TRANS
COMFORT
SWITCH

C224

CAV	CIRCUIT	FUNCTION
1	Z1 20BK	GROUND
2	T17 20YL	FUSED IGNITION SWITCH OUTPUT
3	T177 20TN	TRANS SWITCH POWER MODE

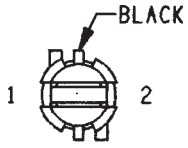

TRANS
COMFORT
SWITCH
LAMP

C225

CAV	CIRCUIT	FUNCTION
1	E2 200R/BK	PANEL LAMPS DRIVER
2	Z1 20BK	GROUND

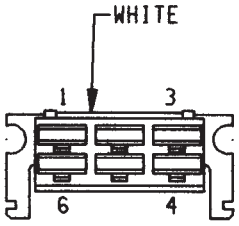

DIMMING
MODULE

C228

CAV	CIRCUIT	FUNCTION
1	A38 120R	IGNITION SWITCH OUTPUT (RUN)
2	—	—
3	Z1 20BK	GROUND
4	L90 18DB/RD	PARK LAMP SWITCH OUTPUT
5	L3 16RD/OR	DIMMER SWITCH HIGH BEAM OUTPUT
6	L4 16VT/WT	DIMMER SWITCH LOW BEAM OUTPUT

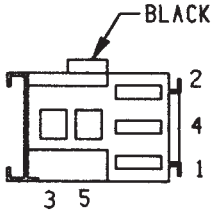

HAZARD
FLASHER
RELAY

C229

CAV	CIRCUIT	FUNCTION
1	L68 18DG	HAZARD WARNING INDICATOR LAMP
2	L9 16BK/WT	FUSED B(+)
3	L9 16BK/WT	FUSED B(+)
3	L9 16BK/WT	FUSED B(+)
4	—	—
5	L12 18VT/TN	HAZARD FLASHER SELECT SIGNAL

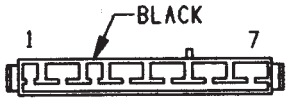

IGNITION SWITCH

C230

CAV	CIRCUIT	FUNCTION
1	A41 14YL/WT	IGNITION SWITCH OUTPUT (START)
2	A21 12YL	IGNITION SWITCH OUTPUT (RUN/START)
3	G9 20GY/BK	BRAKE WARNING LAMP DRIVER
3	G20 20VT/OR	ECT GAUGE SENSOR SIGNAL
4	A1 12RD	FUSED B(+)
5	A38 12OR	IGNITION SWITCH OUTPUT (RUN)
6	A48 12VT	IGNITION SWITCH OUTPUT (RUN/ACC)
7	A1 12RD	FUSED B(+)

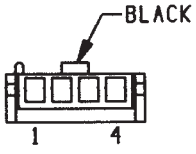

IGNITION KEY-IN WARNING SWITCH

C231

CAV	CIRCUIT	FUNCTION
1	Z1 18BK	GROUND
2	M50 20YL/RD	KEY—IN LAMP DRIVER
3	G26 20LB	KEY—IN IGNITION SWITCH SENSE
4	M11 20PK/LB	COURTESY LAMP SWITCH OUTPUT

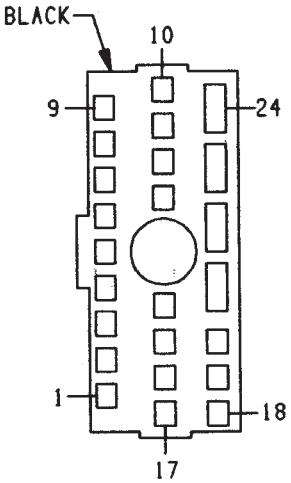

MULTI-FUNCTION SWITCH

C232

CAV	CIRCUIT	FUNCTION
1	—	—
2	—	—
3	V6 18DB	FUSED IGNITION SWITCH OUTPUT
4	V3 18BR/WT	WIPER SWITCH LOW SPEED OUTPUT
5	V4 16RD/YL	WIPER SWITCH HIGH SPEED OUTPUT
6	F86 16LG/BK	FUSED IGNITION SWITCH OUTPUT
7	V11 18BK/TN	LOW WASHER FLUID SENSE
8	V51 18WT	INTERMITTENT WIPER DELAY
9	V50 18LG	WIPER SWITCH DELAY OUTPUT
10	—	—
11	L60 18WT/BL	RIGHT TURN SIGNAL (W/ABS)
11	L60 18TN	RIGHT TURN SIGNAL (W/O ABS)
12	L60 18WT/BL	RIGHT TURN SIGNAL (W/ABS)
12	L60 18TN	RIGHT TURN SIGNAL (W/O ABS)
13	L12 18VT/TN	HAZARD FLASHER OUTPUT
14	—	—
15	L61 18LG/YL	LEFT TURN SIGNAL (W/ABS)
15	L61 18LG	LEFT TURN SIGNAL (W/O ABS)
16	L61 18LG/YL	LEFT TURN SIGNAL (W/ABS)
16	L61 18LG	LEFT TURN SIGNAL (W/O ABS)
17	L5 18BK/WT	COMBINATION FLASHER OUTPUT (TURN SIGNALS)
18	—	—
19	—	—
20	—	—
21	L11 16PK/LG	COMBINATION FLASHER OUTPUT (HAZARD)
22	L3 16RD/OR	DIMMER SWITCH HIGH BEAM OUTPUT
22	L3 16RD/OR	DIMMER SWITCH HIGH BEAM OUTPUT
23	F39 12PK/LG	FUSED B(+)
24	L4 16VT/WT	DIMMER SWITCH LOW BEAM OUTPUT
24	L4 16VT/WT	DIMMER SWITCH LOW BEAM OUTPUT

C233

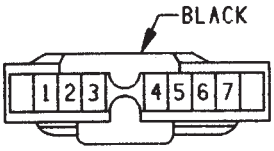

WIPER/WASHER SWITCH
(STANDARD)
OR
INTERMITTENT WIPER
CONTROL MODULE
(INTERMITTENT)

CAV	CIRCUIT	FUNCTION
1	——	——
2	V10 18BR	WINDSHIELD WASHER SWITCH OUTPUT
3	V4 18RD/YL	WIPER SWITCH HIGH SPEED OUTPUT
4	F86 18LG/BK	FUSED IGNITION SWITCH OUTPUT
4	F86 18LG/BK	FUSED IGNITION SWITCH OUTPUT
5	V3 18BR/WT	WIPER SWITCH LOW SPEED OUTPUT
6	V55 18TN/RD	WIPER PARK SWITCH SENSE
7	Z1 18BK	GROUND
7	Z1 18BK	GROUND (W/O ABS)

C234



CAV	CIRCUIT
1	Z1 20BK
1	Z1 20BK
2	E2 200R/BK

W/O ABS

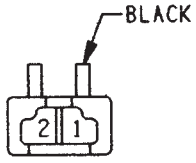

CAV	CIRCUIT
1	Z1 20BK
2	E2 200R/BK

C235

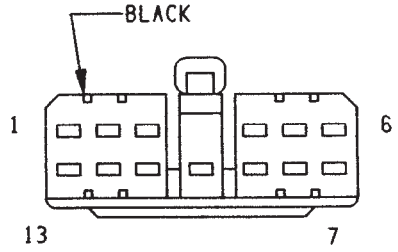

RADIO

CAV	CIRCUIT	FUNCTION
1	X57 20BR/LB	LEFT REAR SPEAKER (–)
2	X55 18BR/RD	LEFT FRONT SPEAKER (–)
3	X5 18LB/RD	RADIO DISPLAY OUTPUT
4	E2 180R/BK	PANEL LAMPS DRIVER
5	X56 18DB/RD	RIGHT FRONT SPEAKER (–)
6	X58 20DB/OR	RIGHT REAR SPEAKER (–)
7	X52 20DB/WT	RIGHT REAR SPEAKER (+)
8	X54 18VT	RIGHT FRONT SPEAKER (+)
9	F85 18VT/WT	FUSED IGNITION SWITCH OUTPUT
10	M1 18PK	FUSED B(+)
11	X60 18DG/RD	RADIO 12-VOLT OUTPUT
12	X53 18DG	LEFT FRONT SPEAKER (+)
13	X51 20BR/YL	LEFT REAR SPEAKER (+)

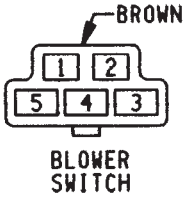

BLOWER SWITCH

C236

CAV	CIRCUIT	FUNCTION
1	C4 12TN	LOW MOTOR BLOWER DRIVER
2	C1 12DG	FUSED IGNITION SWITCH OUTPUT
3	—	—
4	C6 12LB	M2 BLOWER MOTOR DRIVER
5	C43 12YL/BR	FUSED/IGNITION SWITCH OUTPUT(ACC/RUN)

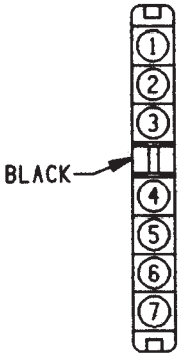

INTERMITTENT WIPER CONTROL MODULE

C237

CAV	CIRCUIT	FUNCTION
1	V51 18WT	INTERMITTENT WIPER DELAY
2	V11 18BK/TN	LOW WASHER FLUID SENSE
3	V4 16RD/YL	WIPER SWITCH HIGH SPEED OUTPUT
4	F86 16LG/BK	FUSED IGNITION SWITCH OUTPUT
5	V3 18BR/WT	WIPER SWITCH LOW SPEED OUTPUT
6	V6 18DB	FUSED IGNITION SWITCH OUTPUT
7	V50 18LG	WIPER SWITCH DELAY OUTPUT

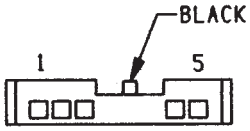

VEHICLE SPEED CONTROL SWITCH

C238

CAV	CIRCUIT	FUNCTION
1	X3 20BK/RD	HORN RELAY CONTROL
2	V33 20WT/LG	VEH SPEED CNTRL RESUME SW SENSE
3	V34 20WT/RD	VEH SPEED CONTROL SWITCH FEED
4	V31 20BR/RD	VEH SPEED CONTROL COAST/SET SW SENSE
5	V32 20YL/RD	VEH SPEED CONTROL ON/OFF SW SENSE

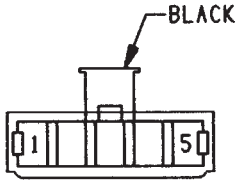

MODE SELECTOR SWITCH

C239

CAV	CIRCUIT	FUNCTION
1	C43 12YL/BR	FUSED IGNITION SWITCH OUTPUT (ACC/RUN)
2	C7 12BK/TN	HIGH BLOWER MOTOR DRIVER
3	—	—
4	C7 12BK/TN	HIGH BLOWER MOTOR DRIVER
5	C90 16LG/WT	A/C PRESSURE SWITCH OUTPUT

C240

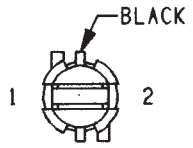

HEATER-A/C
PANEL LAMP

CAV	CIRCUIT	FUNCTION
1	E2 200R/BK	PANEL LAMPS DRIVER
2	Z1 16BK	GROUND

C241
RELAY CENTER
(8W-11-15)

C242

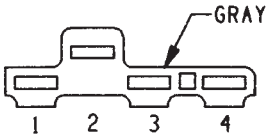

BLOWER
RESISTOR

CAV	CIRCUIT	FUNCTION
1	C6 12LB	M2 BLOWER MOTOR DRIVER
2	C1 12DG	FUSED IGNITION SWITCH OUTPUT
2	C1 12DG	FUSED IGNITION SWITCH OUTPUT
3	C4 12TN	LOW BLOWER MOTOR OUTPUT
4	C43 12YL/BR	FUSED IGNITION SWITCH OUTPUT (ACC/RUN)

C243

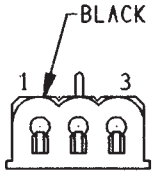

A/C
CYCLING SWITCH

CAV	CIRCUIT	FUNCTION
1	Z1 16BK	GROUND
2	C21 16LB	A/C SWITCH SENSE
3	C91 16DB/OR	A/C SWITCH SENSE

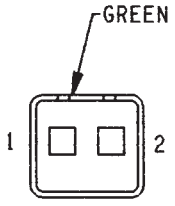

CAV	CIRCUIT
1	X53 20DG
2	X55 20BR/RD

C244

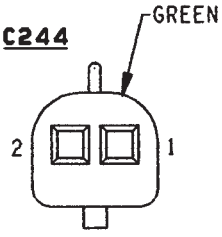

CAV	CIRCUIT
1	X53 20DG
2	X55 20BR/RD

C245

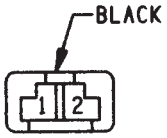

LEFT INSTRUMENT PANEL SPEAKER

CAV	CIRCUIT	FUNCTION
1	X53 20DG	LEFT FRONT SPEAKER (+)
1	X53 18DG	LEFT FRONT SPEAKER (+)
2	X55 20BR/RD	LEFT FRONT SPEAKER (−)
2	X55 18BR/RD	LEFT FRONT SPEAKER (−)

C246



LEFT COURTESY LAMP

CAV	CIRCUIT	FUNCTION
1	M1 20PK	FUSED B (+)
2	M2 20YL	COURTESY LAMP DRIVER

C247

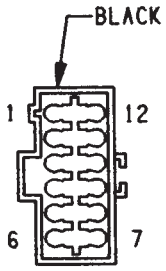

CAV	CIRCUIT
1	X51 20BR/YL
2	X52 20DB/WT
3	X57 20BR/LB
4	X58 20DB/OR
5	A11 12BK/GY
6	L61 18LG
7	M1 18PK
8	C15 14BK/WT
9	F20 18WT
10	V13 18BR/LG
11	V20 18BK/WT
12	G10 20LG/RD

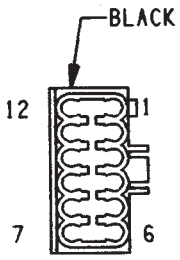

CAV	CIRCUIT
1	X51 20BR/YL
2	X52 20DB/WT
3	X57 20BR/LB
4	X58 20DB/OR
5	A11 12RD
6	L61 18LG/YL
7	M1 20PK
8	C15 12BK/WT
9	F20 18WT
10	V13 18BR/LG
11	V20 18BK/WT
12	G10 18LG/RD

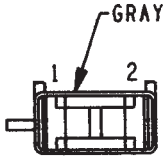

GLOVE BOX LAMP AND SWITCH

C248

CAV	CIRCUIT	FUNCTION
1	M1 20PK	FUSED B (+)
2	Z1 18BK	GROUND

C249

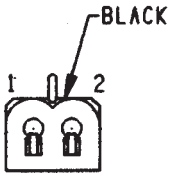

CAV	CIRCUIT
1	Z1 20BK
2	M2 20YL

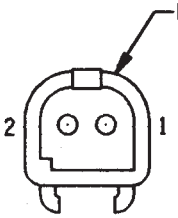

CAV	CIRCUIT
1	Z1 20BK
2	M2 20YL

C301

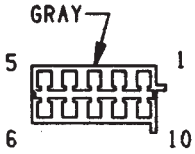

CAV	CIRCUIT
1	P2 18BK/WT
1	P2 18BK/WT
2	Q17 14RD/BK
3	Q17 14DB/WT
4	—
5	P38 200R/WT
6	P34 18PK/BK
6	P34 18PK/BK
7	Z1 14BK
8	Q1 14YL
9	—
10	C15 16BK/WT

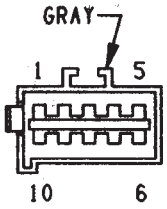

CAV	CIRCUIT	
1	P2 18BK/WT	
1	P2 18BK/WT	2 DR
2	Q27 14RD/BK	4 DR
3	Q17 14DB/WT	4 DR
4	—	
5	P38 200R/WT	
6	P34 18PK/BK	
6	P34 18PK/BK	2 DR
7	Z1 14BK	
8	Q1 14YL	4 DR
9	—	
10	C15 14BK/WT	

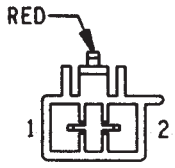

LEFT REAR DOOR WINDOW MOTOR

C302

CAV	CIRCUIT	FUNCTION
1	Q12 14BR	LT RR P/W UP/DOWN CONTROL
2	Q22 14VT	LT RR P/W UP/DOWN CONTROL

C303

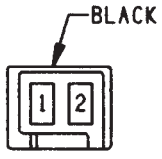

LEFT REAR DOOR JAMB SWITCH

CAV	CIRCUIT	FUNCTION
1	M2 20YL	COURTESY LAMPS DRIVER
1	M2 18YL	COURTESY LAMPS DRIVER
2	Z1 20BK	GROUND

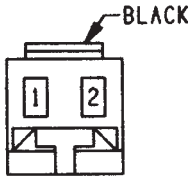

LEFT REAR DOOR LOCK MOTOR

C304

CAV	CIRCUIT	FUNCTION
1	P2 18BK/WT	DOOR LOCK RELAY OUTPUT
2	P34 18PK/BK	DOOR UNLOCK DRIVER

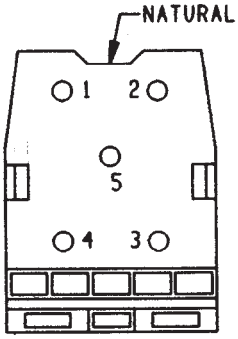

LEFT REAR DOOR WINDOW SWITCH

C305

CAV	CIRCUIT	FUNCTION
1	Q12 14BR	LT RR P/W UP/DOWN CONTROL
2	Q27 14RD/BK	LT RR P/W UP/DOWN CONTROL
3	Q22 14VT	LT RR P/W UP/DOWN CONTROL
4	Q17 14DB/WT	LT RR P/W UP/DOWN CONTROL
5	Q1 14YL	POWER WINDOW MASTER SWITCH OUTPUT

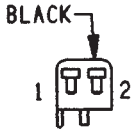

SEAT BELT SWITCH

C306

CAV	CIRCUIT	FUNCTION
1	Z1 20BK	GROUND
2	G10 20LG/RD	SEAT BELT SWITCH SENSE

C307

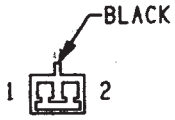

CAV	CIRCUIT
1	E2 200R
2	Z1 20BK

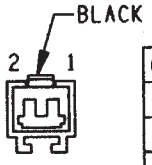

CAV	CIRCUIT
1	E2 200R
1	E2 200R
2	Z1 20BK
2	Z1 20BK

C308

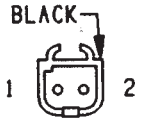

CAV	CIRCUIT
1	Z1 14BK
2	A11 12BK/GY

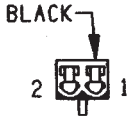

CAV	CIRCUIT
1	Z1 14BK
2	A11 12BK/GY

C309

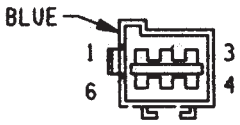

CAV	CIRCUIT
1	L60 18TN
2	Z1 18BK
3	L35 18BR/WT
4	L10 20BR/LG
5	L90 18DB/RD
5	L90 18DB/RD
6	L50 18WT/TN

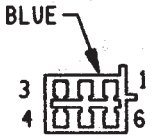

CAV	CIRCUIT
1	L60 18TN
1	L60 18TN
2	Z1 18BK
3	L35 18BR/WT
3	L35 18BR/WT
4	L10 18BR/LG
4	L10 18BR/LG
5	L90 18DB/RD
5	L90 18DB/RD
6	L50 18WT/TN
6	L50 18WT/TN

C310

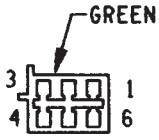

CAV	CIRCUIT
1	M2 18YL
2	E2 20OR
3	G4 20DB
4	G9 20GY/BK
5	P38 20OR/WT
6	A241 14DG/TN

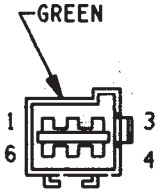

CAV	CIRCUIT
1	M2 18YL
2	E2 20OR
3	G4 20DB
4	G9 20GY/BK
5	P38 20OR/WT
6	A241 14DG/TN

C311

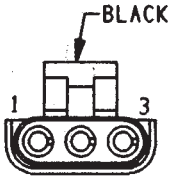

CAV	CIRCUIT
1	Z1 14BK
2	G4 20DB
3	A241 14DG/TN

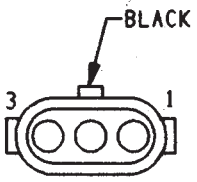

CAV	CIRCUIT
1	99 18BK
2	57 16VT
2	F9 140R

C312

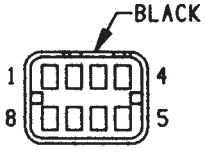

CAV	CIRCUIT
1	P2 18BK/WT
2	P34 18PK/BK
3	M4 20VT/YL
4	L50 18WT/TN
5	V13 18BR/LG
6	F20 18WT
7	V20 18BK/WT
8	L90 18DB/RD

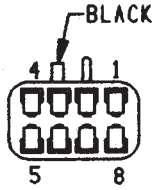

CAV	CIRCUIT
1	P2 18BK/WT
2	P34 18PK/BK
3	M4 20VT/YL
4	L50 18WT/TN
5	V13 18BR/RD
6	F20 18WT
7	V20 18BK/YL
8	L90 20DB/RD

C313

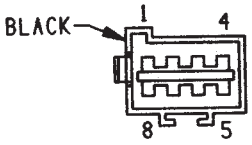

CAV	CIRCUIT
1	L10 18BR/LG
2	L61 18LG
3	Z1 16BK
4	L36 18LG/BK
5	L90 18DB/RD
6	L50 18WT/TN
6	L50 18WT/TN
7	A11 14RD
8	L60 18TN

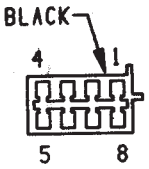

CAV	CIRCUIT
1	L10 20BR/LG
2	L61 18LG
3	Z1 18BK
4	L35 18BR/WT
5	L90 18DB/RD
6	L50 18WT/TN
6	L50 18WT/TN
7	A11 14BK/GY
8	L60 18TN

(TRAILER TOW HARNESS ONLY)

CAV	CIRCUIT
1	L10 18BR/LG
1	L10 18BR/LG
2	L61 18LG
2	L61 18LG
3	Z1 20BK
4	L36 18LG/BK
5	L90 18DB/RD
5	L90 18DB/RD
6	L50 18WT/TN
7	—
8	—

C314

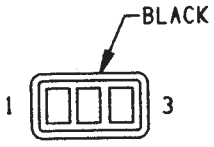

CAV	CIRCUIT
1	M1 18PK
2	M2 18YL
3	M4 20VT/YL

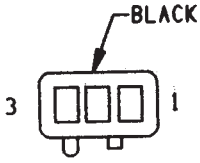

CAV	CIRCUIT
1	M1 20PK
2	M2 20YL
3	G71 20VT/YL

C315

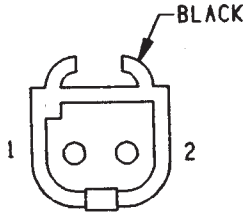

CAV	CIRCUIT
1	Z1 12BK
2	C15 14BK/WT

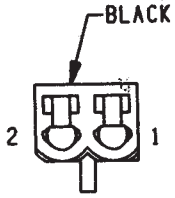

CAV	CIRCUIT
1	Z1 14BK
2	C15 14BK/RD

C316

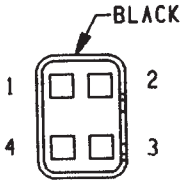

CAV	CIRCUIT
1	X58 20DB/OR
2	X52 20DB/WT
3	X57 20BR/LB
4	X51 20BR/YL

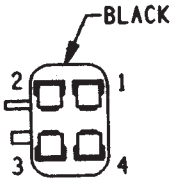

CAV	CIRCUIT
1	X58 20DB/OR
2	X52 20DB/WT
3	X57 20BR/LB
4	X51 20BR/YL

C317

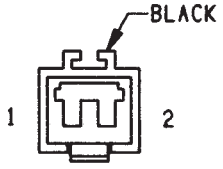

CAV	CIRCUIT
1	96 14DB
2	—

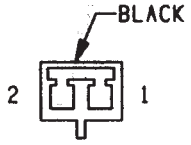

CAV	CIRCUIT
1	96 14LB
2	—

C318

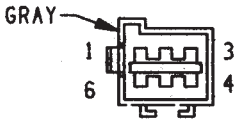

CAV	CIRCUIT
1	——
2	P34 18PK/BK
3	P2 18BK/WT
4	Q18 14GY/BK
5	Q28 14DG/WT
6	Q1 14YL

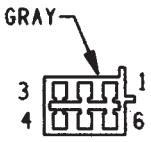

CAV	CIRCUIT
1	——
2	P34 18PK/BK
3	P2 18BK/WT
4	Q18 14GY/BK
5	Q28 14DG/WT
6	Q1 14YL

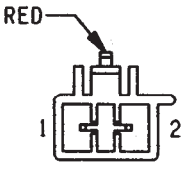

RIGHT REAR DOOR WINDOW MOTOR

C319

CAV	CIRCUIT	FUNCTION
1	Q12 14BR	RT RR P/W UP/DOWN CONTROL
2	Q22 14VT	RT RR P/W UP/DOWN CONTROL

C320

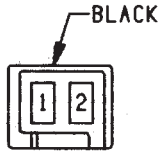

RIGHT REAR DOOR JAMB SWITCH

CAV	CIRCUIT	FUNCTION
1	M2 18YL	COURTESY LAMPS DRIVER
2	Z1 18BK	GROUND

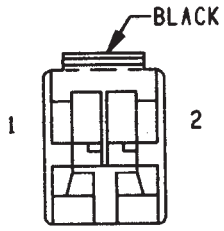

RIGHT REAR DOOR LOCK MOTOR

C321

CAV	CIRCUIT	FUNCTION
1	P2 18BK/WT	DOOR LOCK RELAY OUTPUT
2	P34 18PK/BK	DOOR UNLOCK DRIVER

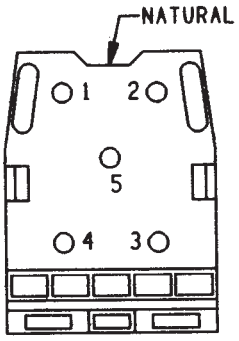

RIGHT REAR DOOR WINDOW SWITCH

C322

CAV	CIRCUIT	FUNCTION
1	Q12 14BR	RT RR P/W UP/DOWN CONTROL
2	Q28 14DG/WT	RT RR P/W UP/DOWN CONTROL
3	Q22 14VT	RT RR P/W UP/DOWN CONTROL
4	Q18 14GY/BK	RT RR P/W UP/DOWN CONTROL
5	Q1 14YL	POWER WINDOW MASTER SWITCH OUTPUT

C323

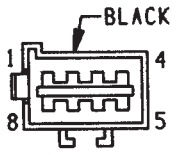

CAV	CIRCUIT
1	L10 18BR/LG
2	L60 18TN
3	Z1 18BK
4	—
5	L90 18DB/RD
6	L50 18WT/TN
7	—
8	—

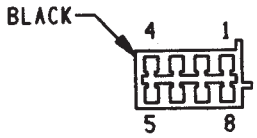

CAV	CIRCUIT
1	L10 18BR/LG
2	L60 18TN
3	Z1 18BK
4	L35 18BR/WT
5	L90 18DB/RD
6	L50 18WT/TN
7	—
8	—

C324

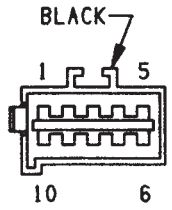

CAV	CIRCUIT
1	P34 18PK/BK
2	P2 18BK/WT
3	P36 20PK/VT
4	P35 20OR/VT
5	P38 20OR/WT
6	—
7	P80 20YL
8	P81 20DB
9	P79 20DB/LB
10	C15 16BK/WT

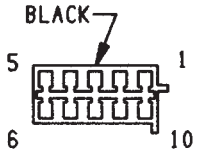

CAV	CIRCUIT
1	P34 18PK/BK
2	P2 18BK/WT
3	P36 14PK/VT
4	P35 14OR/VT
5	P38 14OR/WT
6	—
7	P78 20YL/LG
8	P77 20WT/BK
9	P79 20DB/LB
10	C15 16BK/WT

C325

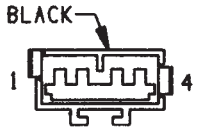

CAV	CIRCUIT
1	Q1 14YL
2	Q16 14BR/WT
3	Q26 14VT/WT
4	Z1 14BK

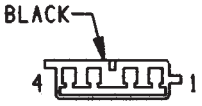

CAV	CIRCUIT
1	Q1 14YL
2	Q16 14BR/WT
3	Q26 14VT/WT
4	Z1 16BK

C326

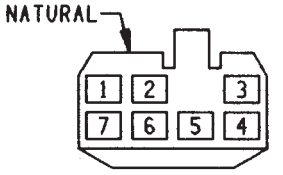

POWER MIRROR SWITCH ASSEMBLY

CAV	CIRCUIT	FUNCTION
1	P60 20BR/WT	FUSED B(+)
2	Z1 14BK	GROUND
3	P79 20DB/LB	RETURN
4	P80 20YL	UP/DOWN MOTOR—LEFT
5	P81 20DB	RIGHT/LEFT MOTOR—LEFT
6	P77 20WT/BK	RIGHT/LEFT MOTOR—RIGHT
7	P78 20YL/LG	UP/DOWN MOTOR—RIGHT

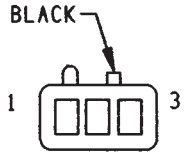

DOME/READING LAMPS

C327

CAV	CIRCUIT	FUNCTION
1	M1 20PK	FUSED B(+)
2	M2 20YL	COURTESY LAMP SWITCH OUTPUT
3	Z1 20BK	GROUND

C328

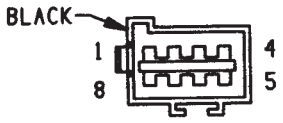

CAV	CIRCUIT
1	P2 18BK/WT
1	P2 18BK/WT
2	P35 200R/VT
2	P35 200R/VT
3	P77 20WT/BK
4	P79 20DB/LB
5	P34 18PK/BK
5	P34 18PK/BK
6	P36 20PK/VT
6	P36 20PK/VT
7	P78 20YL/LG
8	C15 16BK/WT

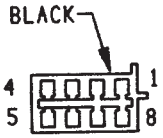

CAV	CIRCUIT
1	P2 18BK/WT
2	P35 140R/VT
3	P77 20WT/BK
4	P79 20DB/LB
5	P34 18PK/BK
6	P36 14PK/VT
7	P80 20YL
8	C15 16BK/RD

C329

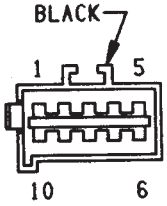

CAV	CIRCUIT
1	Q18 14GY/BK
2	Q1 14YL
3	F81 12TN
4	Q26 14VT/WT
5	Q16 14BR/WT
6	Q17 14DB/WT
7	Q28 14DG/WT
8	Q27 14RD/BK
9	P38 200R/WT
9	P38 200R/WT
10	Z1 14BK

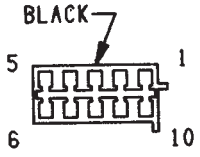

CAV	CIRCUIT
1	Q18 14GY/BK
2	Q1 14YL
3	F81 12TN
4	Q26 14VT/WT
5	Q16 14BR/WT
6	Q17 14DB/WT
7	Q28 14DG/WT
8	Q27 14RD/BK
9	P38 140R/WT
10	Z1 14BK

C330

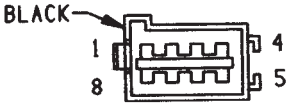

CAV	CIRCUIT
1	P35 200R/VT
1	P35 200R/VT
2	—
3	P77 20WT/BK
4	P79 20DB/LB
5	P2 18BK/WT
6	P34 18PK/BK
7	—
8	P36 20PK/VT
8	P36 20PK/VT

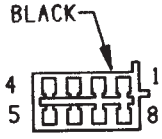

CAV	CIRCUIT
1	P35 140R/VT
2	—
3	P77 20WT/BK
4	P79 20DB/LB
5	P2 18BK/WT
6	P34 18PK/BK
7	—
8	P36 14PK/VT

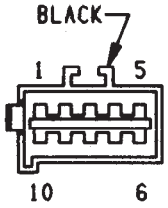

C331

CAV	CIRCUIT
1	Q1 14YL
2	—
3	F81 12TN
4	Q26 14VT/WT
5	Q16 14BR/WT
6	P38 200R/WT
6	P38 200R/WT
7	Z1 14BK
8	P78 20YL/LG
9	—
10	C15 16BK/WT

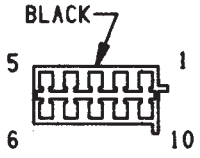

CAV	CIRCUIT
1	Q1 14YL
2	—
3	F81 12TN
4	Q26 14VT/WT
5	Q16 14BR/WT
6	P38 140R/WT
7	Z1 14BK
8	P80 20YL
9	—
10	C15 16BK/WT

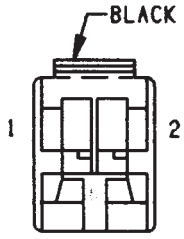

LEFT FRONT DOOR LOCK MOTOR

C332

CAV	CIRCUIT	FUNCTION
1	P2 18BK/WT	DOOR LOCK RELAY OUTPUT
2	P34 18PK/BK	DOOR UNLOCK DRIVER

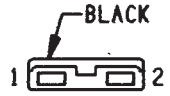

LEFT FRONT DOOR SPEAKER

C333

CAV	CIRCUIT	FUNCTION
1	X53 20DG	LEFT FRONT SPEAKER (+)
2	X55 20BR/RD	LEFT FRONT SPEAKER (−)

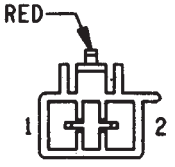

LEFT FRONT DOOR WINDOW MOTOR

C334

CAV	CIRCUIT	FUNCTION
1	Q11 14LB	LT FRONT P/W UP/DOWN CONTROL
2	Q21 14WT	LT FRONT P/W UP/DOWN CONTROL

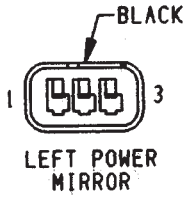

LEFT POWER MIRROR

C335

CAV	CIRCUIT	FUNCTION
1	P79 20DB/LB	GROUND
2	P77 20WT/BK	RIGHT/LEFT MOTOR—LEFT
3	P78 20YL/LG	UP/DOWN MOTOR—LEFT

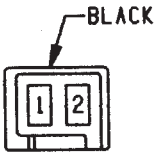

LEFT POWER MIRROR HEATER ELEMENT

C336

CAV	CIRCUIT	FUNCTION
1	C15 16BK/WT	HEATED REAR WINDOW RELAY OUTPUT
2	Z1 16BK	GROUND

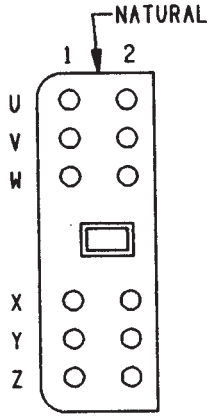

LEFT FRONT DOOR LOCK SWITCH

C337

CAV	CIRCUIT	FUNCTION
U1	—	—
U2	Q16 14BR/WT	MASTER SWITCH—MOTOR UP
V1	Q21 14WT	LT FT P/W UP/DOWN CONTROL
V2	Q11 14LB	LT FT P/W UP/DOWN CONTROL
W1	Q26 14VT/WT	MASTER SWITCH—MOTOR DOWN
W2	Q1 14YL	MASTER SWITCH FEED
X1	P38 14OR/WT	DOOR LOCK RELAY CONTROL
X2	—	—
Y1	P36 14PK/VT	DOOR LOCK SWITCH OUTPUT (UNLOCK)
Y2	P35 14OR/VT	DOOR LOCK SWITCH OUTPUT (LOCK)
Z1	—	—
Z2	—	—

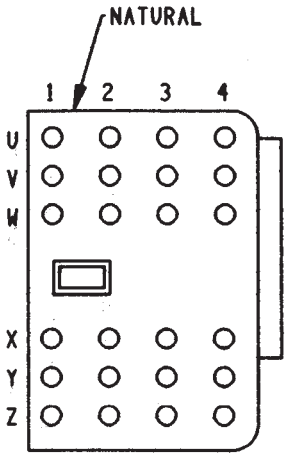

RIGHT
FRONT DOOR
LOCK
SWITCH

C338

CAV	CIRCUIT	FUNCTION
U1	—	—
U2	—	—
U3	—	—
U4	—	—
V1	Q1 14YL	MASTER SWITCH OUTPUT
V2	F81 12TN	FUSED IGNITION SWITCH OUTPUT
V3	Q26 14VT/WT	POWER WINDOW MASTER SWITCH-MOTOR UP (2-DOOR ONLY)
V3	Q28 14DG/WT	RIGHT REAR P/W UP/DOWN CONTROL (4-DOOR ONLY)
V4	Q16 14BR/WT	POWER WINDOW MASTER SWITCH-MOTOR DOWN (2-DOOR ONLY)
V4	Q18 14GY/BR	RIGHT REAR P/W UP/DOWN CONTROL (4-DOOR ONLY)
W1	—	—
W2	—	—
W3	Z1 14PK	GROUND
W4	—	—
X1	P38 14OR/WT	DOOR LOCK RELAY CONTROL
X2	—	—
X3	—	—
X4		
Y1	P36 14PK/VT	DOOR LOCK SWITCH OUTPUT (UNLOCK)
Y2	P35 14OR/VT	DOOR LOCK SWITCH OUTPUT (LOCK)
Y3	Q22 14VT	RIGHT FRONT P/W UP/DOWN CONTROL
Y4	Q12 14BR	RIGHT FRONT P/W UP/DOWN CONTROL
Z1	—	—
Z2	—	—
Z3	—	—
Z4	—	—

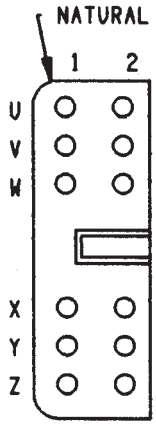

RIGHT
WINDOW SWITCH

C339

CAV	CIRCUIT	FUNCTION
U1	—	—
U2	—	—
V1	Q27 14RD/BK	RIGHT REAR P/W UP/DOWN CONTROL
V2	Q17 14DB/WT	RIGHT REAR P/W UP/DOWN CONTROL
W1	—	—
W2	—	—
X1	—	—
X2	—	—
Y1	Q26 14VT/WT	POWER WINDOW MASTER SWITCH-MOTOR UP
Y2	Q16 14BR/WT	POWER WINDOW MASTER SWITCH-MOTOR DOWN
Z1	—	—
Z2	—	—

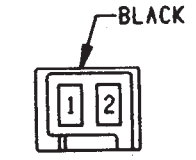

RIGHT POWER MIRROR HEATER ELEMENT

C340

CAV	CIRCUIT	FUNCTION
1	C15 16BK/RD	HEATED REAR WINDOW RELAY OUTPUT
2	Z1 16BK	GROUND

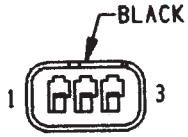

RIGHT POWER MIRROR

C341

CAV	CIRCUIT	FUNCTION
1	P80 20YL	UP/DOWN MOTOR-RIGHT
2	P77 20WT/BK	RIGHT/LEFT MOTOR-RIGHT
3	P79 20DB/LB	GROUND

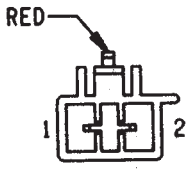

RIGHT FRONT DOOR WINDOW MOTOR

C342

CAV	CIRCUIT	FUNCTION
1	Q12 14BR	RT FT P/W UP/DOWN CONTROL
2	Q22 14VT	RT FT P/W UP/DOWN CONTROL

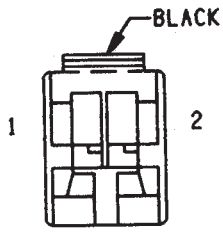

RIGHT FRONT DOOR LOCK MOTOR

C343

CAV	CIRCUIT	FUNCTION
1	P2 18BK/WT	DOOR LOCK RELAY OUTPUT
2	P34 18PK/BK	DOOR UNLOCK DRIVER

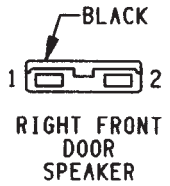

RIGHT FRONT DOOR SPEAKER

C344

CAV	CIRCUIT	FUNCTION
1	X54 20VT	RIGHT FRONT SPEAKER (+)
2	X56 20DB/RD	RIGHT FRONT SPEAKER (–)

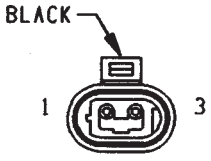

G-SENSOR

C345

CAV	CIRCUIT	FUNCTION
1	B516 18TN/WT	G-SENSOR # 2 SENSE
2	B515 18YL/VT	G-SENSOR # 1 SENSE
3	B517 18PK/OR	G-SENSOR GROUND

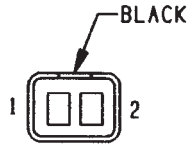

RIGHT REAR WHEEL SPEED SENSOR

C346

CAV	CIRCUIT	FUNCTION
1	B1 18YL/DB	RIGHT REAR WHEEL SPEED SENSOR (–)
2	B2 18YL	RIGHT REAR WHEEL SPEED SENSOR (+)

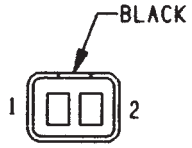

LEFT REAR WHEEL SPEED SENSOR

C347

CAV	CIRCUIT	FUNCTION
1	B4 18LG	LEFT REAR WHEEL SPEED SENSOR (+)
2	B3 18LG/DB	LEFT REAR WHEEL SPEED SENSOR (–)

C348

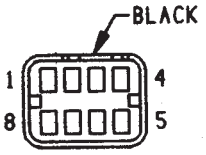

CAV	CIRCUIT
1	M4 20VT/YL
2	L50 18WT/TN
3	P2 18BK/WT
4	P34 18PK/BK
5	V13 18BR/RD
6	F20 18WT
7	V20 18BK/YL
8	L90 18DB/RD

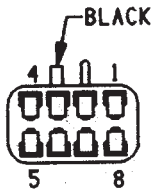

CAV	CIRCUIT
1	M4 20VT/YL
2	L50 18WT/TN
3	P2 18BK/WT
4	P34 18PK/BK
5	V13 18BR/RD
6	F20 18WT
7	V20 18BK/YL
8	L90 20DB/RD

C349

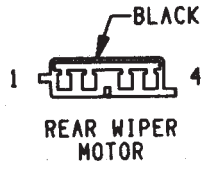

CAV	CIRCUIT	FUNCTION
1	Z1 18BK	GROUND
2	V20 18BK/YL	REAR WASHER PUMP MOTOR CONTROL
3	V13 18BR/RD	REAR WIPER SWITCH OUTPUT
4	F20 18WT	FUSED IGNITION SWITCH OUTPUT

C350

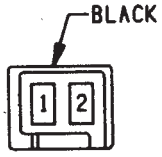

CAV	CIRCUIT
1	L50 18WT/TN
2	Z1 20BK

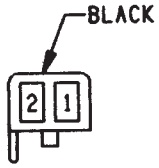

CAV	CIRCUIT
1	L50 18WT/TN
2	Z1 20BK

C351

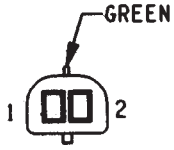

CAV	CIRCUIT
1	L90 20DB/RD
2	Z1 20BK



CAV	CIRCUIT
1	L90 20DB/RD
2	Z1 20BK

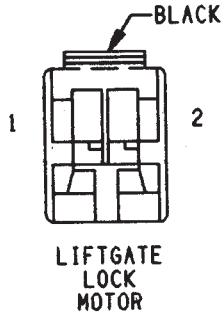

C352

CAV	CIRCUIT	FUNCTION
1	P34 18PK/BK	DOOR UNLOCK DRIVER
2	P2 18BK/WT	DOOR LOCK RELAY OUTPUT

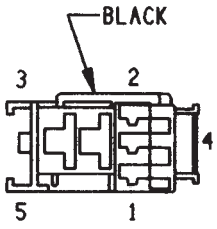

RIGHT TURN RELAY

C353

CAV	CIRCUIT	FUNCTION
1	L60 18TN	RIGHT TURN SIGNAL
2	Z1 20BK	GROUND
3	L60 18TN	RIGHT TURN SIGNAL
4	95 18PK	STOP LAMP RELAY OUTPUT
5	94 18DG	STOP LAMP RELAY OUTPUT

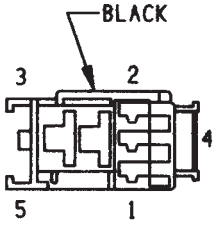

LEFT TURN RELAY

C354

CAV	CIRCUIT	FUNCTION
1	L61 18LG	LEFT TURN SIGNAL
2	Z1 20BK	GROUND
3	L61 18LG	LEFT TURN SIGNAL
4	95 18PK	STOP LAMP RELAY OUTPUT
4	95 18PK	STOP LAMP RELAY OUTPUT
5	94 18DG	STOP LAMP RELAY OUTPUT
5	94 18DG	STOP LAMP RELAY OUTPUT

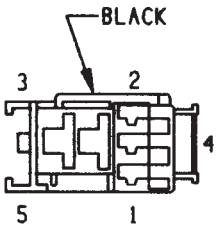

STOP LAMP RELAY

C355

CAV	CIRCUIT	FUNCTION
1	L50 18WT/TN	STOP LAMP SWITCH OUTPUT
2	Z1 20BK	GROUND
3	A11 18RD/BK	GENERATOR OUTPUT
4	94 18DG	STOP LAMP RELAY OUTPUT
5	95 18PK	STOP LAMP RELAY OUTPUT

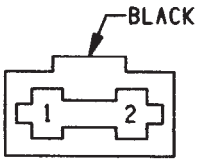

IN-INE CIRCUIT BREAKER

C356

CAV	CIRCUIT	FUNCTION
1	A11 14RD	GENERATOR OUTPUT
2	A11 18RD/BK	GENERATOR OUTPUT

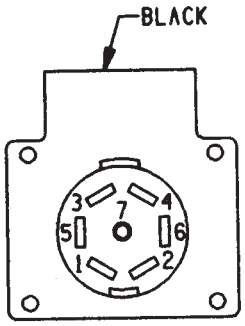

TRAILER TOW CONNECTOR

C358

CAV	CIRCUIT	FUNCTION
1	Z1 16BK	GROUND
2	96 14LB	ELECTRIC BRAKE FEED
3	L90 18DB/RD	PARK LAMP SWITCH OUTPUT
4	A11 14RD	GENERATOR OUTPUT
5	L61 18LG	LEFT TURN SIGNAL
6	L60 18TN	RIGHT TURN SIGNAL
7	L10 18BR/LG	BACK-UP LAMP SWITCH OUTPUT

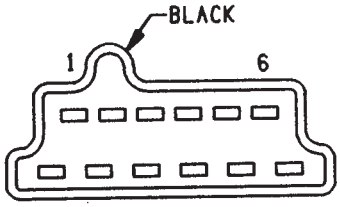

OVERHEAD CONSOLE

C359

CAV	CIRCUIT	FUNCTION
1	—	—
2	Z2 20BK/LG	GROUND
3	—	—
4	Z1 20BK	GROUND
5	M1 20PK	FUSED B(+)
6	M1 20PK	FUSED B(+)
7	F87 20WT/BK	FUSED IGNITION SWITCH OUTPUT
8	M2 20YL	COURTESY LAMP SWITCH OUTPUT
9	G31 20BK/LB	AMBIENT AIR TEMP SENSOR SIGNAL
10	G32 20VT/LG	SENSOR GROUND
11	—	—
12	L90 20DB/RD	PARK LAMP SWITCH OUTPUT
13	E2 20OR/BK	PANEL LAMPS DRIVER

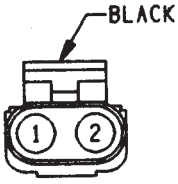

C360

CAV	CIRCUIT
1	G107 18BK/RD
2	G106 18GY/YL

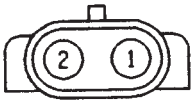

CAV	CIRCUIT
1	G107 20BK/RD
2	G106 20GY/YL

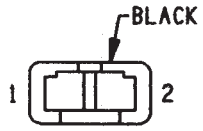

LEFT LIFTGATE SPEAKER

C401

CAV	CIRCUIT	FUNCTION
1	X51 20BR/YL	LEFT REAR SPEAKER (+)
2	X57 20BR/LB	LEFT REAR SPEAKER (—)

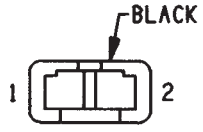

RIGHT LIFTGATE SPEAKER

C402

CAV	CIRCUIT	FUNCTION
1	X52 20DB/WT	RIGHT REAR SPEAKER (+)
2	X58 20DB/OR	RIGHT REAR SPEAKER (—)

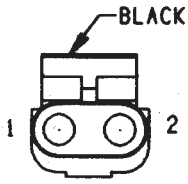

4WD SWITCH

C403

CAV	CIRCUIT	FUNCTION
1	X4 18GY/OR	4WD SWITCH OUTPUT
2	Z1 18BK	GROUND

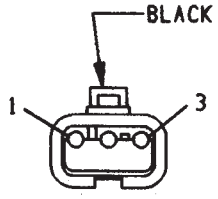

VEHICLE SPEED SENSOR

C404

CAV	CIRCUIT	FUNCTION
1	G7 18WT/OR	VEHICLE SPEED SENSOR SIGNAL
2	K4 18BK/LB	SENSOR GROUND
3	K7 18OR	8-VOLT SUPPLY

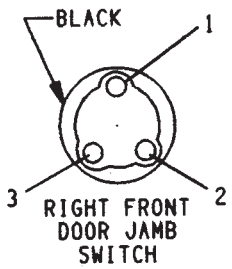

RIGHT FRONT DOOR JAMB SWITCH

C405

CAV	CIRCUIT	FUNCTION
1	Z1 20BK	GROUND
2	G26 20LB	KEY-IN IGNITION SWITCH SENSE
3	M2 20YL	COURTESY LAMPS DRIVER

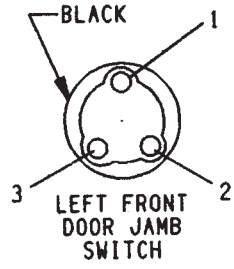

LEFT FRONT DOOR JAMB SWITCH

C406

CAV	CIRCUIT	FUNCTION
1	Z1 20BK	GROUND
2	M2 20YL	COURTESY LAMPS DRIVER
3	—	—

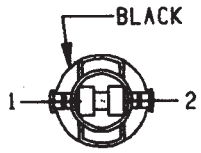

TRANSFER CASE LAMP

C407

CAV	CIRCUIT	FUNCTION
1	E2 200R	PANEL LAMPS DRIVER
2	Z1 20BK	GROUND

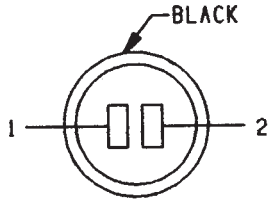

TRANSMISSION RANGE INDICATOR LAMP

C408

CAV	CIRCUIT	FUNCTION
1	E2 200R	PANEL LAMPS DRIVER
2	Z1 20BK	GROUND

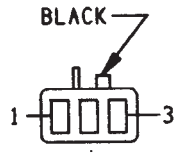

CARGO LAMP

C409

CAV	CIRCUIT	FUNCTION
1	M1 20PK	FUSED B (+)
2	M2 20YL	COURTESY LAMPS DRIVER
3	G71 20VT/YL	LIFTGATE LATCH SWITCH SENSE

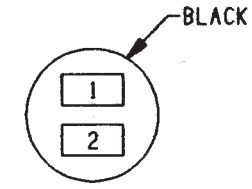

ASH RECEIVER LAMP

C410

CAV	CIRCUIT	FUNCTION
1	E2 200R/BK	PANEL LAMPS DRIVER
2	Z1 20BK	GROUND

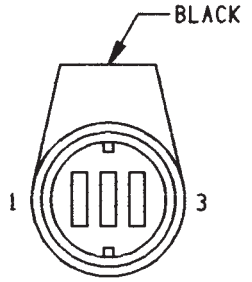

FUEL TANK LEVEL GAUGE SENDING UNIT

C411

CAV	CIRCUIT	FUNCTION
1	F9 140R	FUEL PUMP RELAY OUTPUT
2	—	—
3	57 16VT	FUEL LEVEL SENSOR SIGNAL

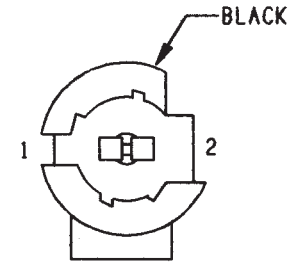

CENTER HIGH MOUNTED STOP LAMP 1

C412

CAV	CIRCUIT	FUNCTION
1	L50 18WT/TN	STOP LAMP SWITCH OUTPUT
2	Z1 18BK	GROUND

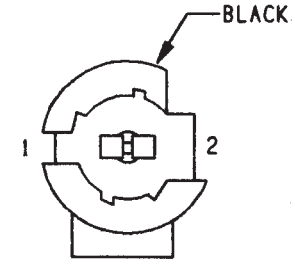

CENTER HIGH MOUNTED STOP LAMP 2

C413

CAV	CIRCUIT	FUNCTION
1	L50 18WT/TN	STOP LAMP SWITCH OUTPUT
1	L50 18WT/TN	STOP LAMP SWITCH OUTPUT
2	Z1 20BK	GROUND
2	Z1 18BK	GROUND

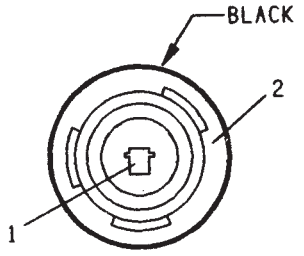

LEFT BACK-UP LAMP

C414

CAV	CIRCUIT	FUNCTION
1	L10 18BR/LG	BACK-UP LAMP SWITCH OUTPUT
2	Z1 18BK	GROUND

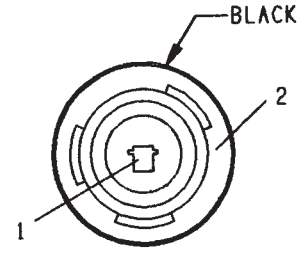

RIGHT BACK-UP LAMP

C415

CAV	CIRCUIT	FUNCTION
1	L10 18BR/LG	BACK-UP LAMP SWITCH OUTPUT
2	Z1 18BK	GROUND

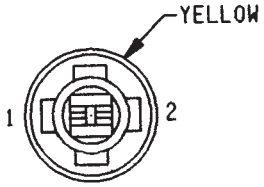

LEFT SIDE MARKER LAMP

C416

CAV	CIRCUIT	FUNCTION
1	L90 18DB/RD	PARK LAMP SWITCH OUTPUT
2	Z1 18BK	GROUND

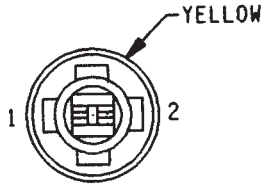

RIGHT SIDE MARKER LAMP

C417

CAV	CIRCUIT	FUNCTION
1	L90 18DB/RD	PARK LAMP SWITCH OUTPUT
2	Z1 18BK	GROUND

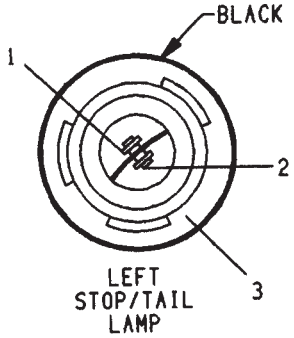

LEFT STOP/TAIL LAMP

C418

CAV	CIRCUIT	FUNCTION
1	L50 18WT/TN	STOP LAMP SWITCH OUTPUT
2	L90 18DB/RD	PARK LAMP SWITCH OUTPUT
3	Z1 18BK	GROUND

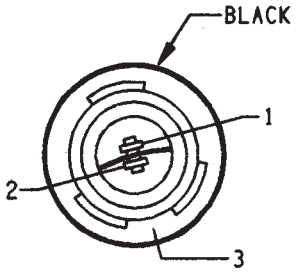

RIGHT STOP/TAIL LAMP

C419

CAV	CIRCUIT	FUNCTION
1	L50 18WT/TN	STOP LAMP SWITCH OUTPUT
2	L90 18DB/RD	PARK LAMP SWITCH OUTPUT
3	Z1 18BK	GROUND

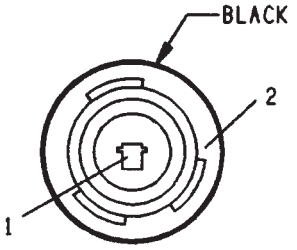

LEFT TURN LAMP

C420

CAV	CIRCUIT	FUNCTION
1	L61 18LG	LEFT TURN SIGNAL
2	Z1 18BK	GROUND

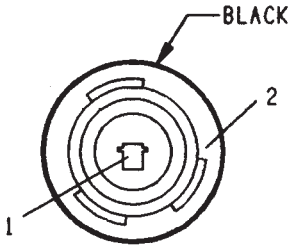

RIGHT TURN LAMP

C421

CAV	CIRCUIT	FUNCTION
1	L60 18TN	RIGHT TURN SIGNAL
2	Z1 18BK	GROUND

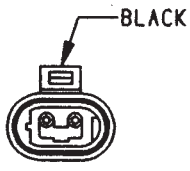

AMBIENT AIR TEMPERATURE SENSOR

C422

CAV	CIRCUIT	FUNCTION
1	G32 18BK/LB	SENSOR GROUND
2	G31 18VT/LG	AMBIENT AIR TEMPERATURE SENSOR SIGNAL

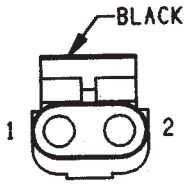

4WD INDICATOR LAMP

C423

CAV	CIRCUIT	FUNCTION
1	G107 18BK/RD	4WD SWITCH OUTPUT
2	G106 18GY/YL	4WD INDICATOR LAMP

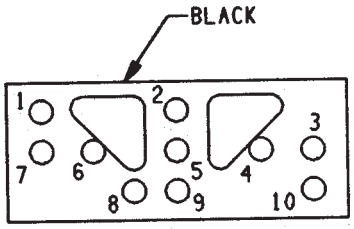

LEFT POWER SEAT SWITCH

C424

CAV	CIRCUIT	FUNCTION
1	—	—
2	S3 14TN	POWER SEAT SWITCH OUTPUT-FORWARD
3	S1 14YL	POWER SEAT SWITCH OUTPUT-RAISE REAR
4	S2 14LG	POWER SEAT SWITCH OUTPUT-LOWER REAR
5	Z1 14BK	GROUND
6	S5 140R	POWER SEAT SWITCH OUTPUT-RAISE FRONT
7	S6 14LB	POWER SEAT SWITCH OUTPUT-LOWER FRONT
8	A11 14RD	FUSED B(+)
9	S4 14WT	POWER SEAT SWITCH OUTPUT-REARWARD
10	—	—

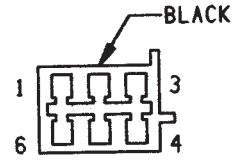

LEFT POWER SEAT MOTOR ASSEMBLY

C425

CAV	CIRCUIT	FUNCTION
1	S1 14YL	POWER SEAT SWITCH OUTPUT-RAISE REAR
2	S4 14WT	POWER SEAT SWITCH OUTPUT-REARWARD
3	S3 14TN	POWER SEAT SWITCH OUTPUT-FORWARD
4	S5 140R	POWER SEAT SWITCH OUTPUT-RAISE FRONT
5	S6 14LB	POWER SEAT SWITCH OUTPUT-LOWER FRONT
6	S2 14LG	POWER SEAT SWITCH OUTPUT-LOWER REAR

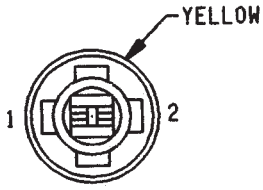

LICENSE LAMP

C426

CAV	CIRCUIT	FUNCTION
1	L90 20DB/RD	PARK LAMP SWITCH OUTPUT
2	Z1 20BK	GROUND

CONNECTOR LOCATIONS

GENERAL INFORMATION

This section provides illustrations identifying component and connector locations in the vehicle. A connector index is provided. Use the wiring diagrams in each section for connector number identification. Refer to the index for the proper figure number.

CONNECTOR LOCATIONS

Connector #	Color	Location	Fig.
C101	BK	Front Left of Engine Compartment	2
C102	BK	In Front of Washer Fluid Reservoir	2
C103	BK	Bottom of Washer Fluid Reservoir	2
C104	BK	Bottom of Washer Fluid Reservoir	2
C105	BK	Top of Washer Fluid Reservoir	2
C106	BK	Top of Radiator Fan Housing	2
C107	BK	Left Fender Side Shield	2
C108	BK	Left Fender Side Shield	2
C109	BK	Near Air Cleaner	2
C110	BK	Left Corner of Engine Compartment	2
C111	BK	Rear of Intake Manifold	4
C112	BK	On Throttle Body	4
C113	BK	On Throttle Body	4
C114	BK	Rear of Intake Manifold	4
C115	GN	Lower Right of I.P.	
C116	BK	Near ABS Control Module	
C117	GN	Center of Dash Panel	2
C118	BK	Injector No. 6	4
C119	BK	Injector No. 5	4
C120	BK	Injector No. 4	4
C121	BK	Injector No. 3	4
C122	BK	Injector No. 2	4
C123	BK	Injector No. 1	4
C124	BK	On Engine, Behind Power Steering Pump	4
C125	BK	On Thermostat Housing	4
C126	BK	On ABS Control Module	7
C127	BK	Near ABS Control Module	7
C128	BK	Near Distributor	4
C129	BK	Near Center of Dash Panel	3
C130	GY	Near Center of Dash Panel	3
C131	BK	Near Left Kick Panel	
C132	BK	On Steering Column	6
C133	BK	Near Center of Dash Panel	3
C134	BK	Center of Dash Panel	3
C135	BK	Below Brake Master Cylinder	3
C136	BK	Right Corner of Engine Compartment	3
C137	BK	Right Side of Hood	3
C138	BK	Near ABS Control Module	
C139	BK	Near ABS Control Module	7
C140	GY	Near ABS Control Module	7
C141	GN	Near ABS Control Module	7
C142	BK	Right Fender Side Shield	3
C143	BK	Right Fender Side Shield	3
C144	BK	Right Fender Side Shield	3
C145	BK	Right Fender Side Shield	3
C146	BK	Below Battery	3
C147	BK	Rear of Battery	5
C148	BK	At Starter Motor	4
C149	BK	Right Side of Engine Near Distributor	4
C150	BK	Rear of Generator	4
C151	BK	Rear of Generator	5
C152	BK	Behind Lens	1
C153	BK	Left Rear of Radiator Closure Panel	1
C154	BK	Behind Lens	1
C155	BK	Behind Lens	1
C156	BK	Behind Lens	1
C157	BK	Center of Grille Opening	1
C158	BK	Center of Grille Opening	1
C159	BK	Behind Lens	1
C160	BK	Behind Lens	1
C201	GY	Center Bottom of I.P.	8
C202	WT	Center Bottom of I.P.	8
C203	BK	Behind Right Kick Panel	12
C204	BK	Right Side of I.P.	
C205	BK	Left Rear of I.P.	8
C206	BK	Left Rear of I.P.	8
C207	BK	Near Right Kick Panel	7
C208	GN	Near Right Kick Panel	7
C209	RD	Behind Right Kick Panel	12
C210	BK	Behind Fender Side Shield	
C211	BK	Near Right Kick Panel	7
C212	BK	Near Right Kick Panel	
C213	BK	Rear of Headlamp Switch	10
C214	BK	Rear of I.P., Right of Steering Column	9
C215	BK	Rear of I.P., Right of Steering Column	9
C216	BK	Rear of I.P., Right of Steering Column	9
C217	RD	Rear of I.P., Right of Steering Column	9
C218	BK	Below Stop Lamp Switch	7
C219	BK	Rear of I.P., Right of Steering Column	9
C220	NAT	Rear of I.P. Cluster	10
C221	BK	Rear of I.P. Cluster	10
C222	NAT	Rear of I.P., Left of Steering Column	9
C223	BK	Rear of I.P., Left of Steering Column	9
C224	BK	Rear of I.P., Left of Steering Column	9
C225	BK	Rear of I.P., Left of Steering Column	9
C226	BK	On Steering Column	6
C227	BK	Near ABS Control Module	7
C228	WT	Center of I.P.	
C229	BK	Center of I.P.	
C230	BK	On Steering Column	6
C231	BK	On Steering Column	6
C232	BK	On Steering Column	6
C233	BK	Center Bottom of I.P.	8
C234	BK	Rear of I.P., Above Ash Receiver	8
C235	BK	Rear of Radio	9
C236	BR	Rear of A/C-Heater Controls	10
C237	BK	Center Bottom of I.P.	8
C238	BK	Near ABS Control Module	7

Connector #	Color	Location	Fig.
C239	BK	Rear of A/C-Heater Controls	10
C240	BK	Rear of A/C-Heater Controls	10
C241	BK	Center Bottom of I.P.	8
C242	GY	Lower Left of I.P.	7
C243	BK	Lower Left of I.P.	7
C244	GN	Near Left Kick Panel	7
C245	BK	Right Rear of I.P.	8
C246	BK	Right Rear of I.P.	8
C247	BK	Near Left Kick Panel	7
C248	GN	Glove Box	10
C249	BK	Near Left Kick Panel	7
C301	GY	Behind Left Kick Panel	
C302	RD	In Left Rear Door	13
C303	BK	In Left Rear Door	13
C304	BK	In Left Rear Door	13
C305	NAT	In Left Rear Door	13
C306	BK	Near Right Seat Belt Anchor	
C307	BK	Near Floor Console	
C308	BK	Below Seat	
C309	BL	Below Right Rear Seat	
C310	GN	Below Right Rear Seat	
C311	BK	Above Fuel Tank	19
C312	BK	In Liftgate	18
C313	BK	Left Rear Quarter Panel	15
C314	BK	Under Left Rear of Roof Liner	15
C315	BK	In Liftgate	18
C316	BK	Left Rear Quarter Panel	15
C317	BK	Left Rear Quarter Panel	15
C318	BK	Below Right Rear Seat	13
C319	RD	In Right Rear Door	13
C320	BK	In Right Rear Door	13
C321	BK	In Right Rear Door	13
C322	NAT	In Right Rear Door	13
C323	BK	Right Rear Quarter Panel	15
C324	BK	Behind Left Kick Panel	12
C325	BK	Behind Left Kick Panel	12
C326	NAT	In Floor Console	19
C327	BK	Behind Dome Lamp	11
C328	BK	Behind Right Kick Panel	12
C329	BK	Behind Right Kick Panel	12
C330	BK	Behind Right Kick Panel	12
C331	BK	Behind Right Kick Panel	12
C332	BK	In Left Door	12
C333	BK	In Left Door	12
C334	RD	In Left Door	12
C335	BK	In Left Door	12
C336	BK	In Left Door	12
C337	NAT	In Left Door	12
C338	NAT	In Right Door	12
C339	NAT	In Right Door	12
C340	BK	In Right Door	12
C341	BK	In Right Door	12
C342	RD	In Right Door	12
C343	BK	In Right Door	12
C344	BK	In Right Door	12
C345	BK	Below Left Rear Seat	14
C346	BK	Below Left Rear Seat	14
C347	BK	Below Left Rear Seat	14
C348	BK	In Liftgate	18
C349	BK	In Liftgate	18
C350	BK	In Liftgate	17
C351	GN	In Liftgate	18
C352	BK	In Liftgate	18
C353	BK	Right Rear Quarter Panel	15
C354	BK	Right Rear Quarter Panel	15
C355	BK	Right Rear Quarter Panel	15
C356	BK	Right Rear Quarter Panel	15
C357	BK	Left Rear Quarter Panel	
C358	BK	Left Rear Quarter Panel	16
C359	BK	Behind Overhead Console	11
C401	BK	Behind Sound Bar	15
C402	BK	Behind Sound Bar	15
C403	BK	Rear of Transfer Case	20
C404	BK	Rear of Transmission (2WD)	20
C404	BK	Rear of Transfer Case (4WD)	20
C405	BK	In Right Front Door	
C406	BK	In Right Front Door	
C407	BK	In Floor Console	
C408	BK	Below Floor Console	19
C409	BK	Behind Sound Bar	15
C410	BK	Center of I.P.	
C411	BK	At Fuel Tank	19
C412	BK	Behind Lens	17
C413	BK	Behind Lens	17
C414	BK	Behind Lens	
C415	BK	Behind Lens	
C416	BK	Behind Lens	
C417	BK	Behind Lens	
C418	BK	Behind Lens	
C419	BK	Behind Lens	
C420	BK	Behind Lens	
C421	BK	Behind Lens	
C422	BK	Right Fender Side Shield	
C423	BK	On I.P., Behind Lamp	
G101		Left Fender Side Shield	2
G102		Left Fender Side Shield	2
G103		Right Rear of Engine	4
G104		Right Rear of Engine	4
G105		Right Rear of Engine	4
G106		Right side of Engine, Below Ignition Coil	5
G107		Right side of Engine, Below Ignition Coil	5
G108		Right Fender Side Shield, Near Battery	5
G201		Below Headlamp Switch	
G301		Left Rear Quarter Panel	15

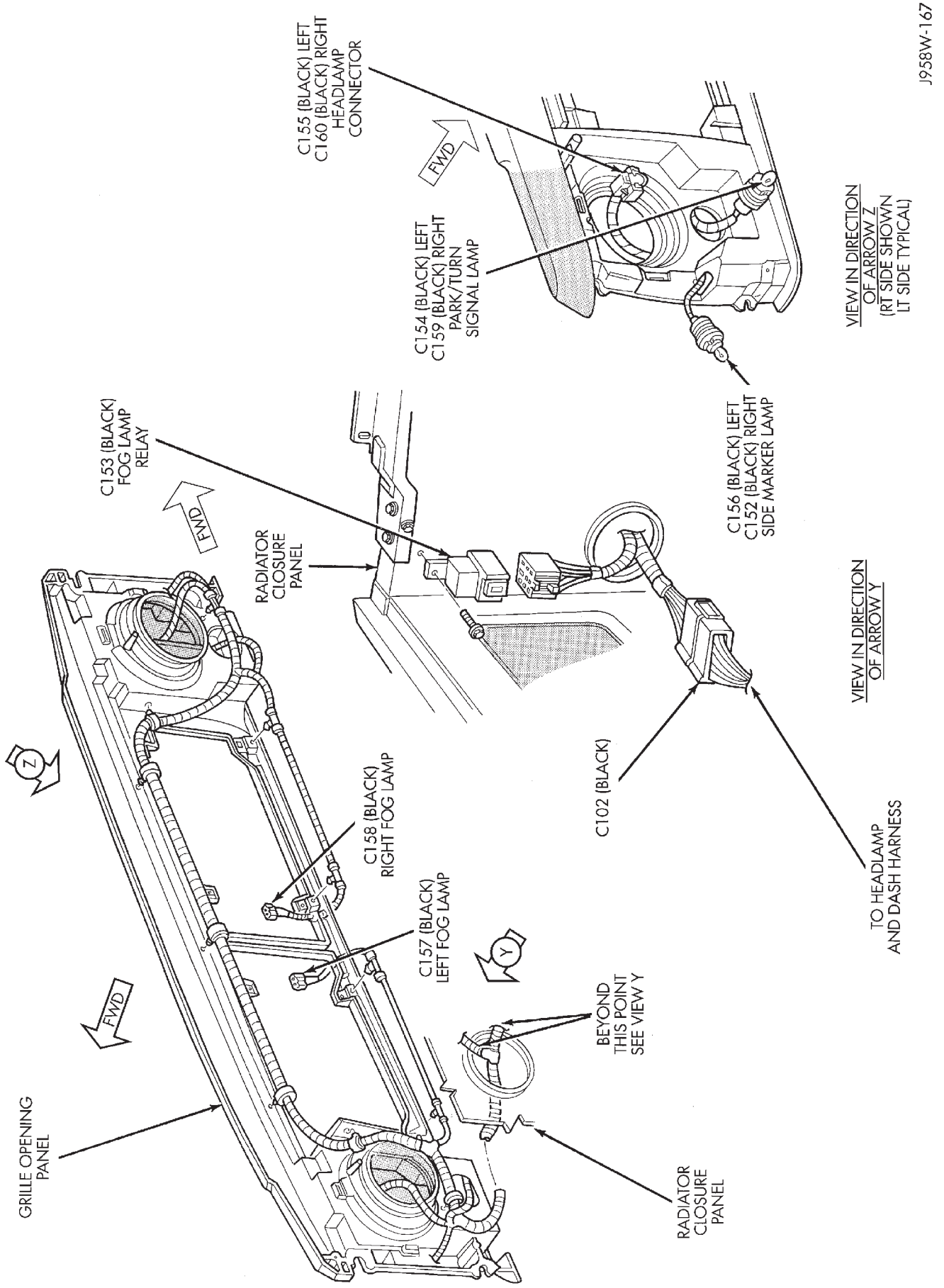

Fig. 1 Front End Lighting Connectors

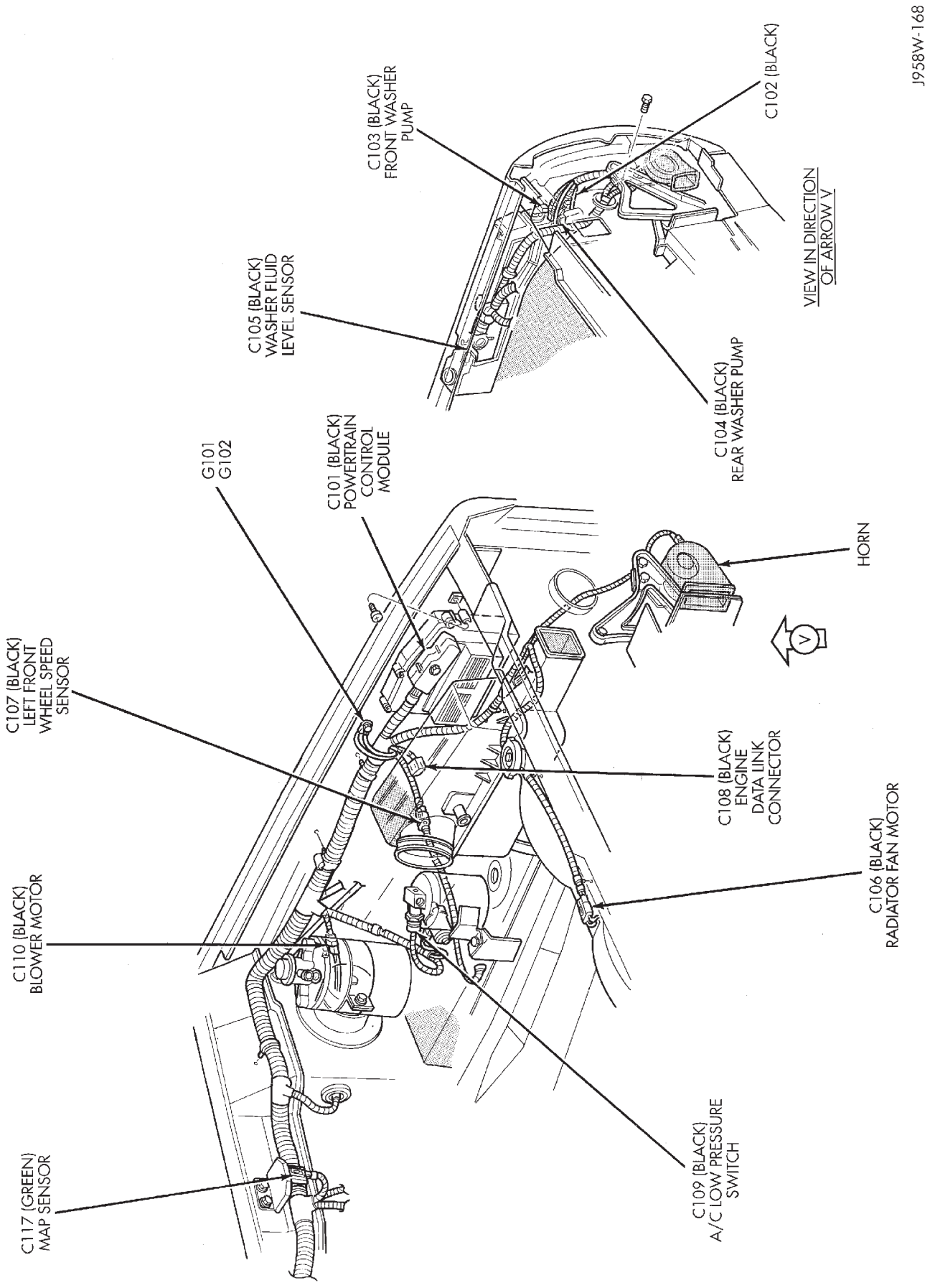

Fig. 2 Engine Compartment Wiring Connectors—Right Side

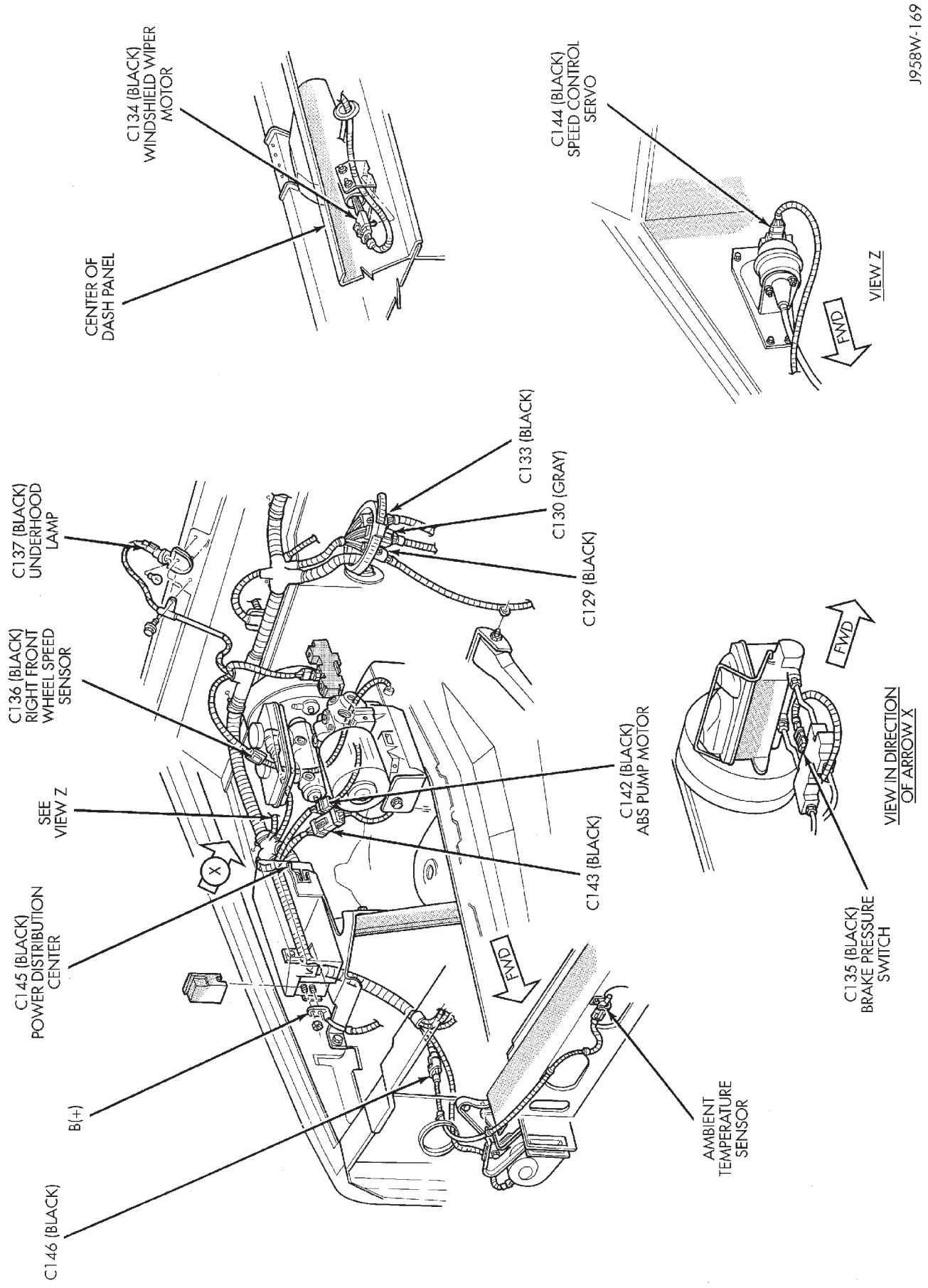

Fig. 3 Engine Compartment Wiring Connectors—Left Side

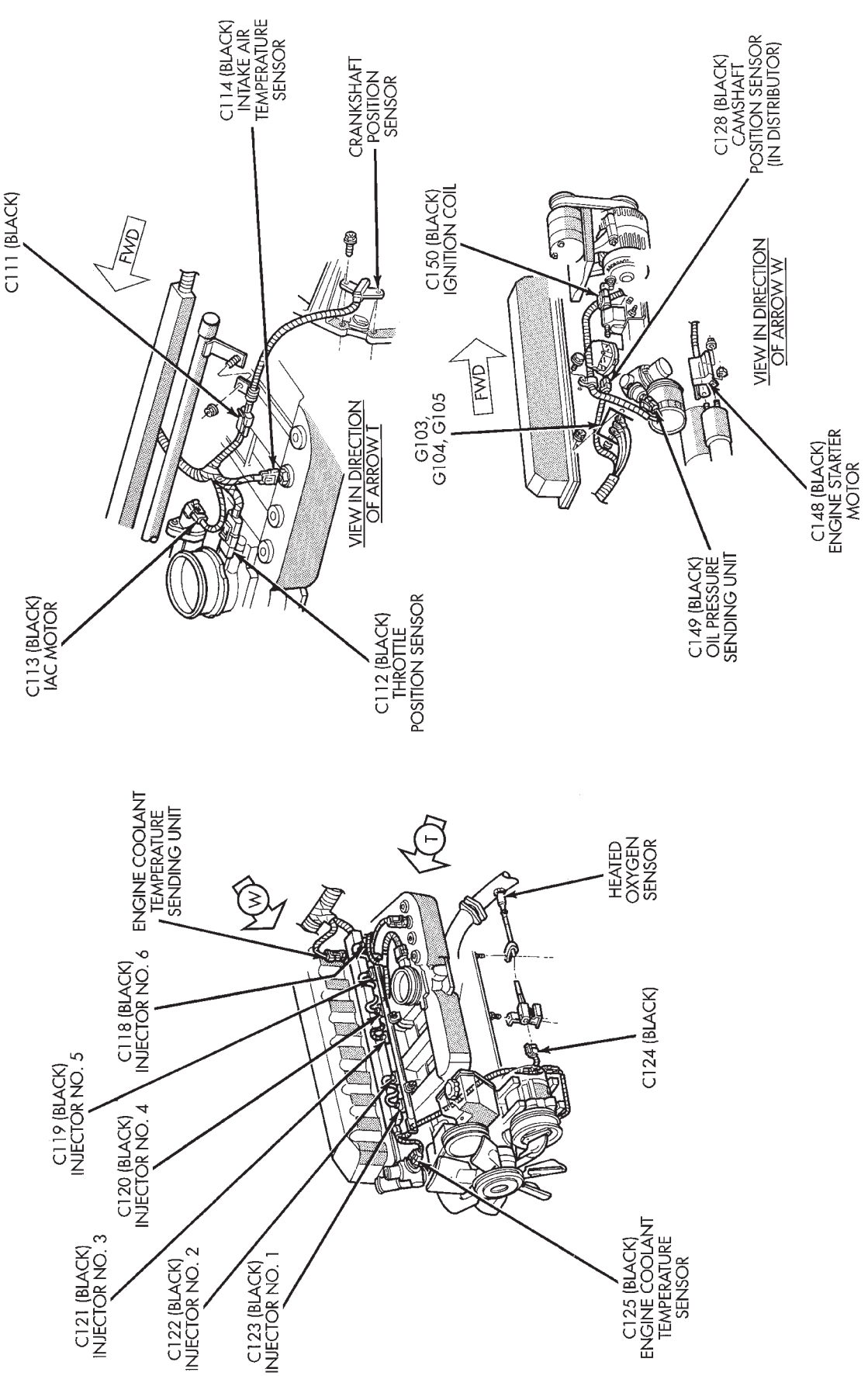

Fig. 4 Engine Wiring Connectors

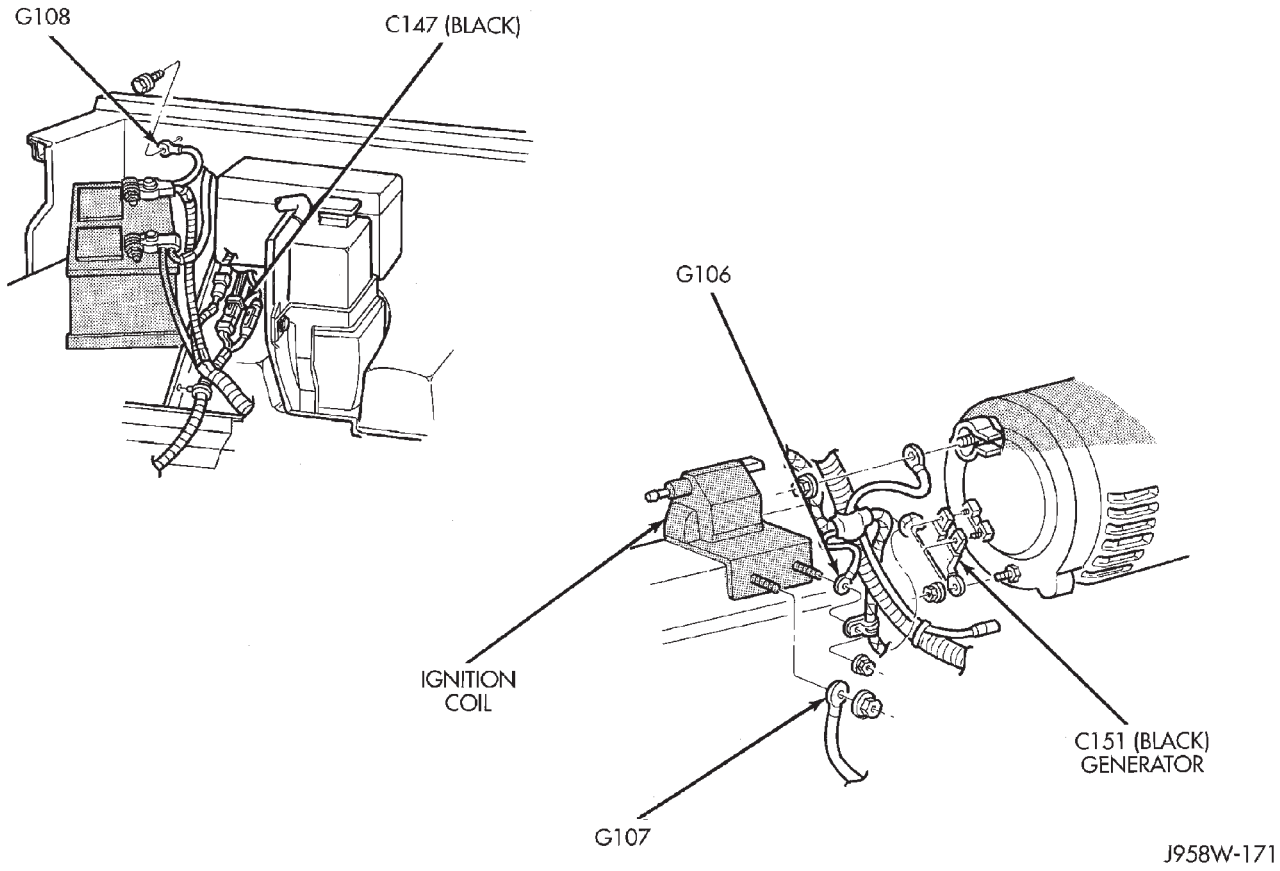

Fig. 5 Battery and Generator Wiring

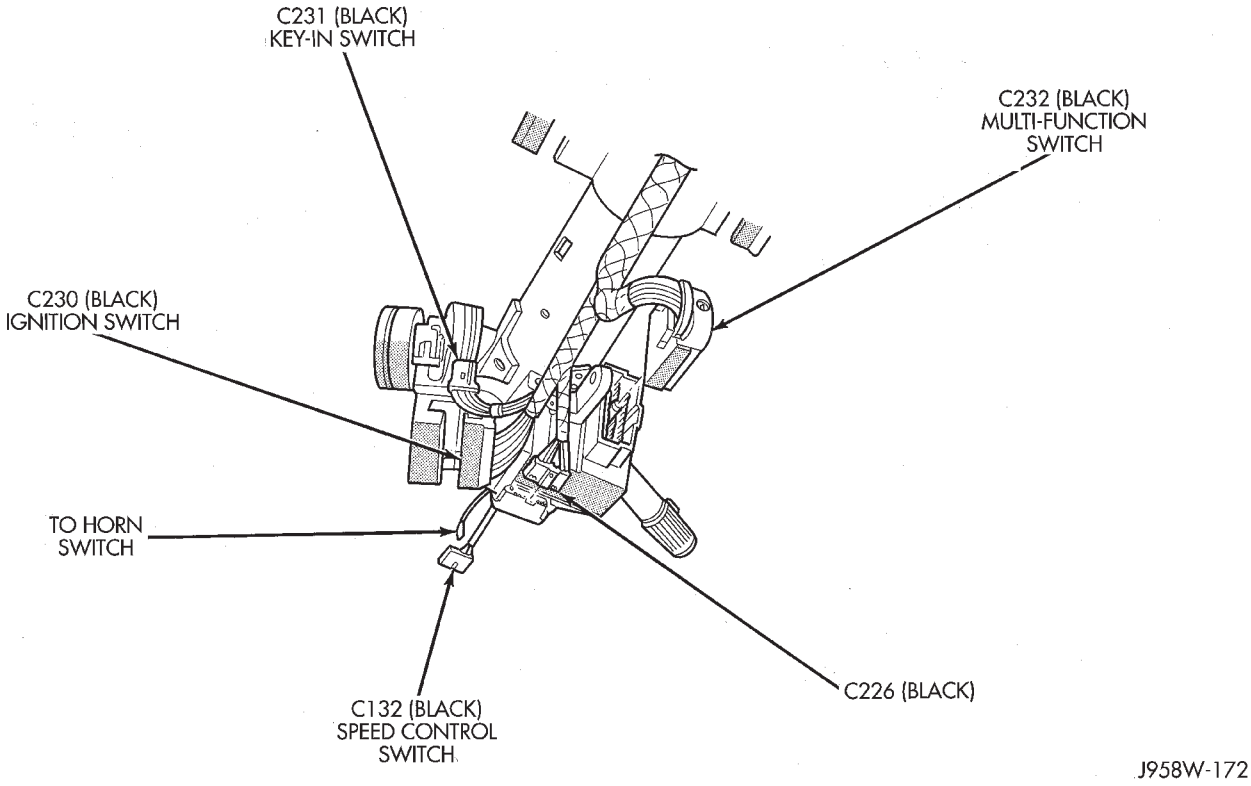

Fig. 6 Steering Column Wiring Connectors

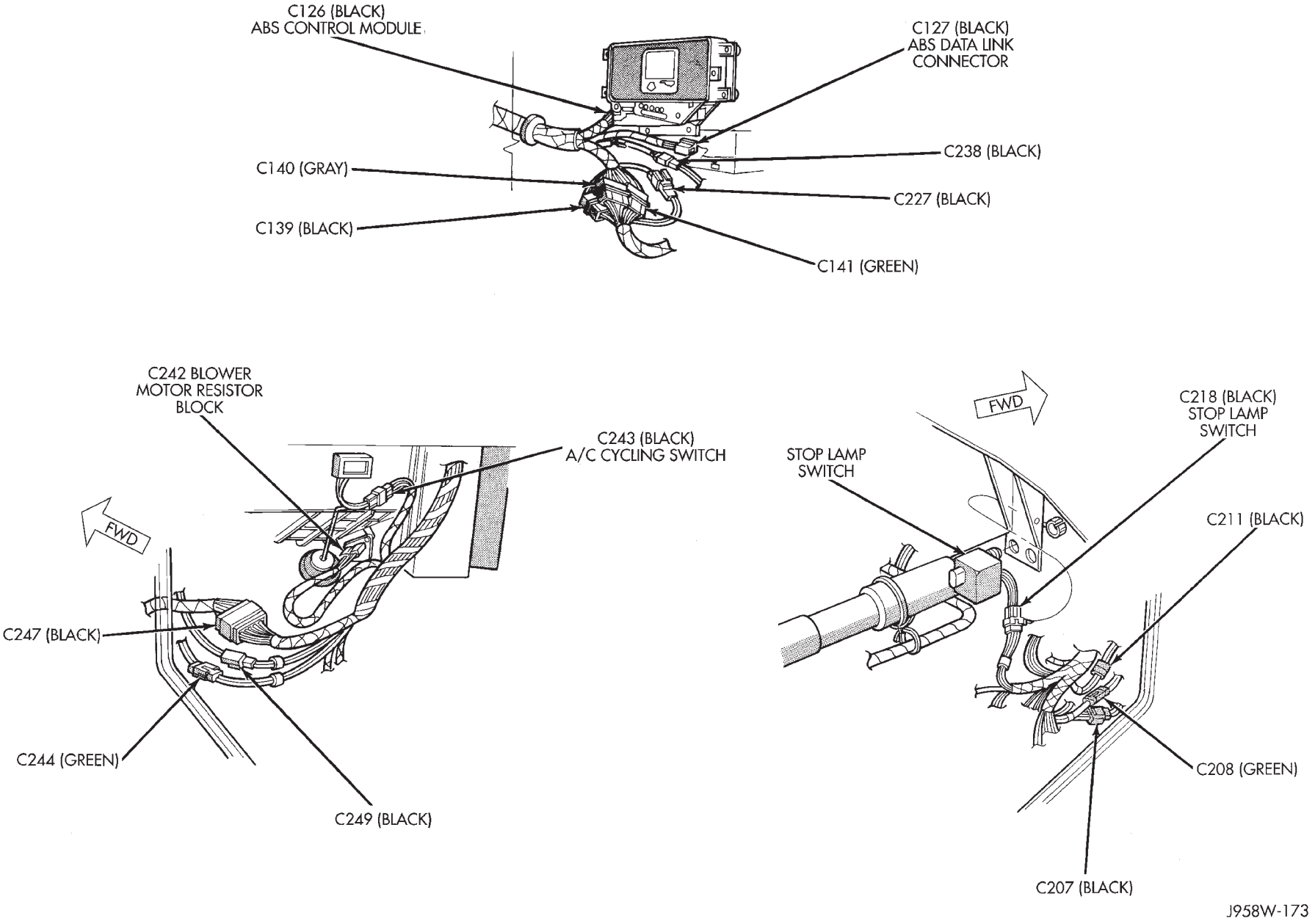

Fig. 7 ABS Control Module

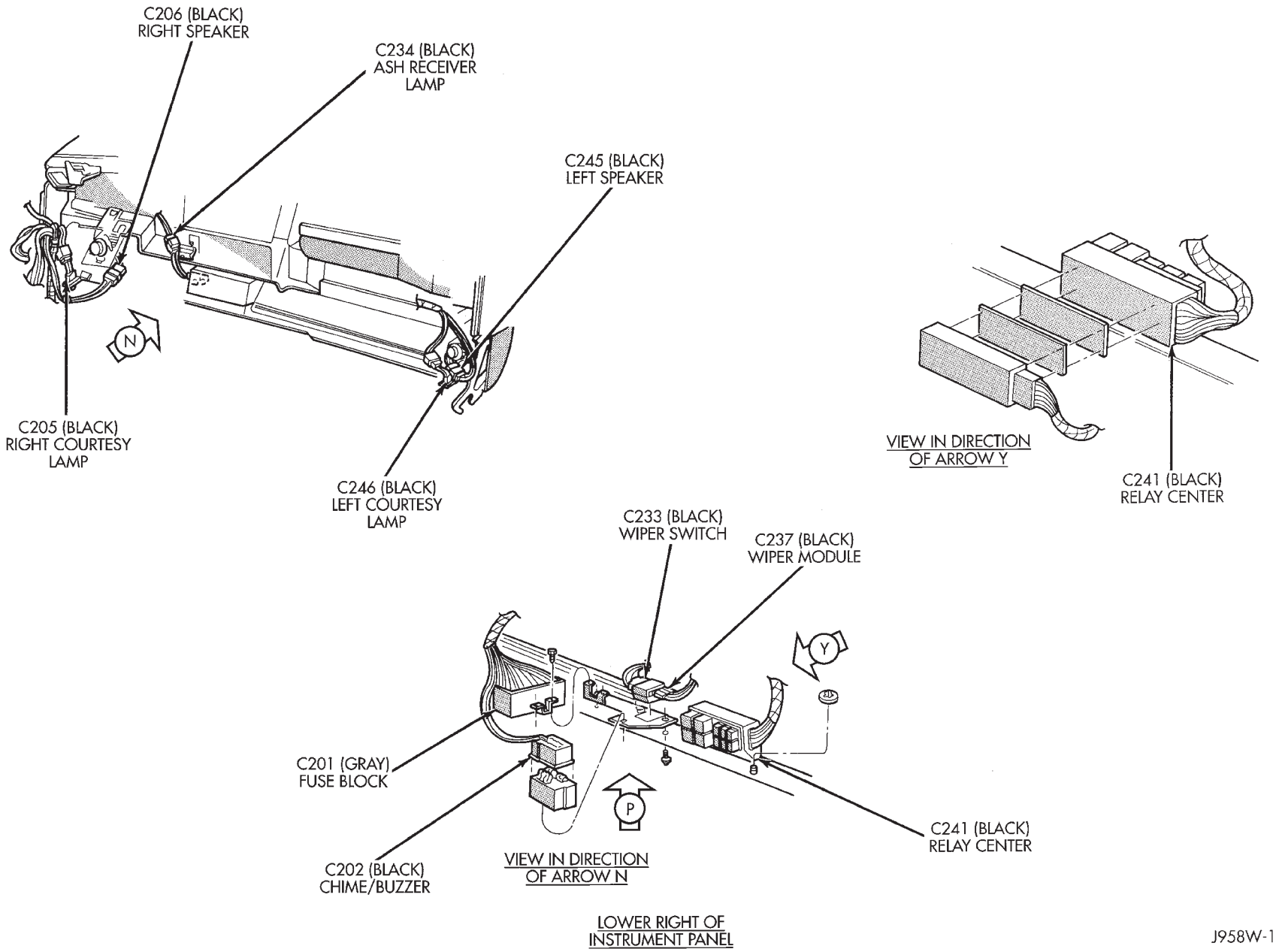

Fig. 8 Fuse Block and Relay Center

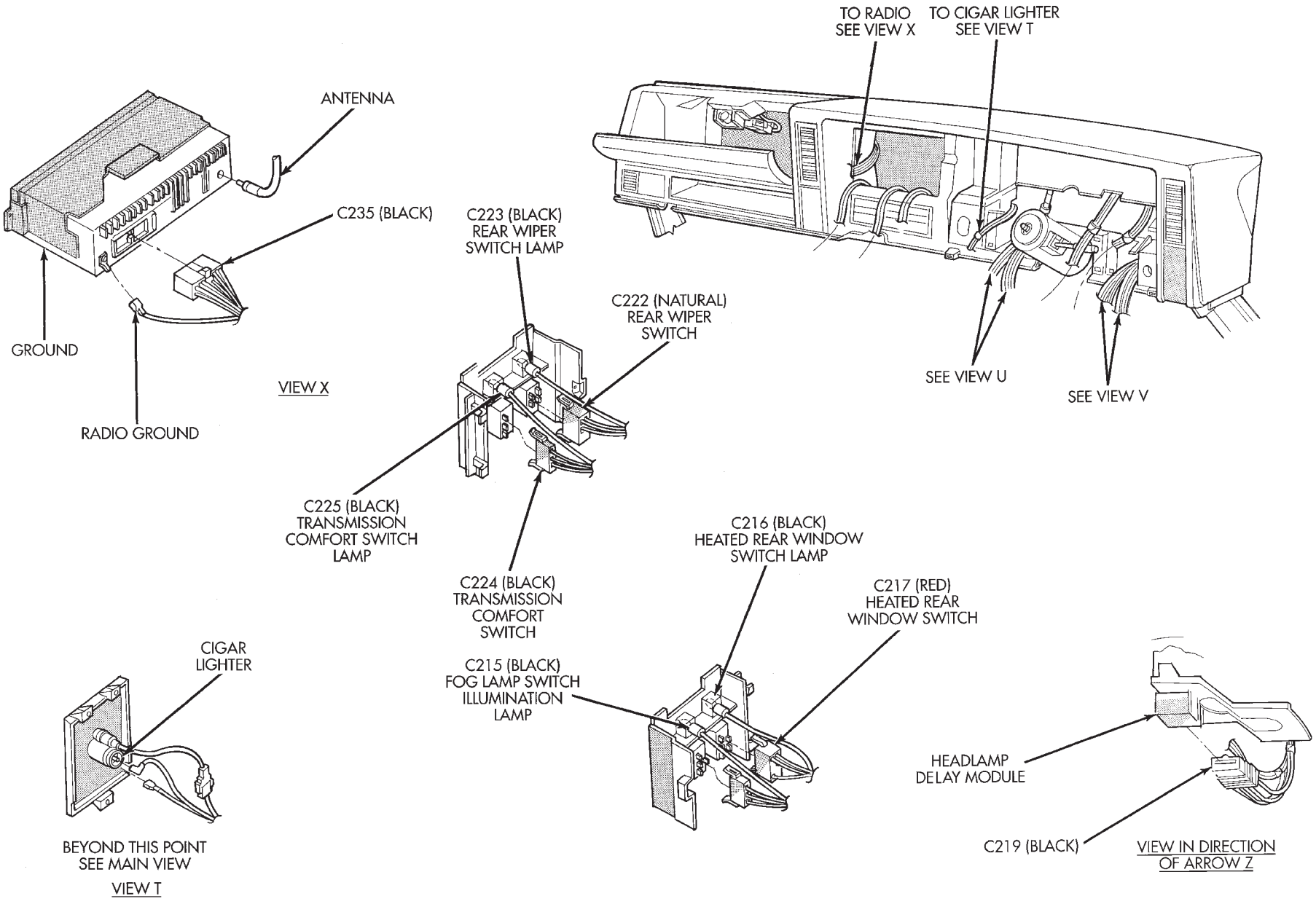

Fig. 9 Instrument Panel Wiring Connectors

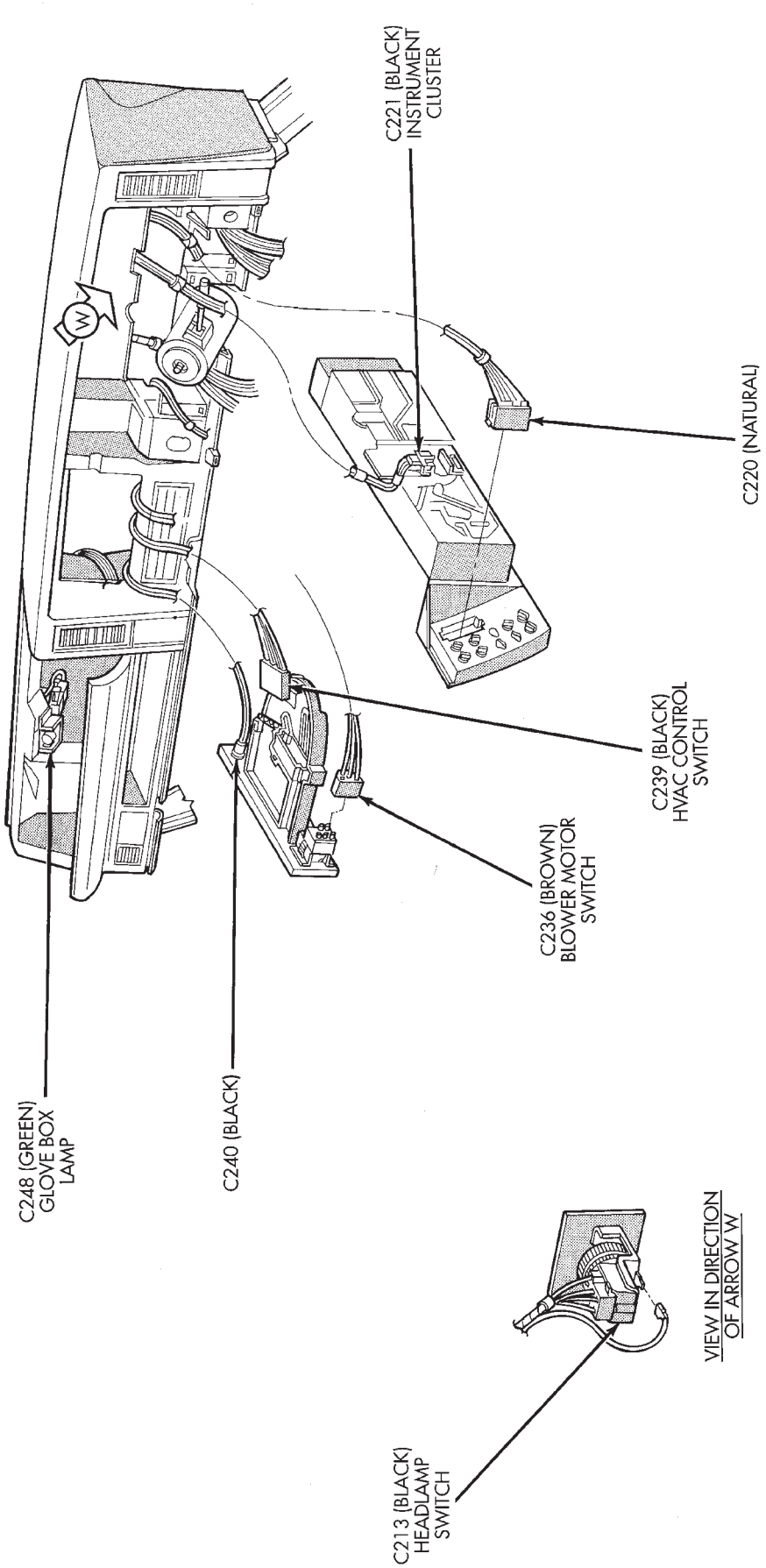

Fig. 10 Instrument Cluster Connectors

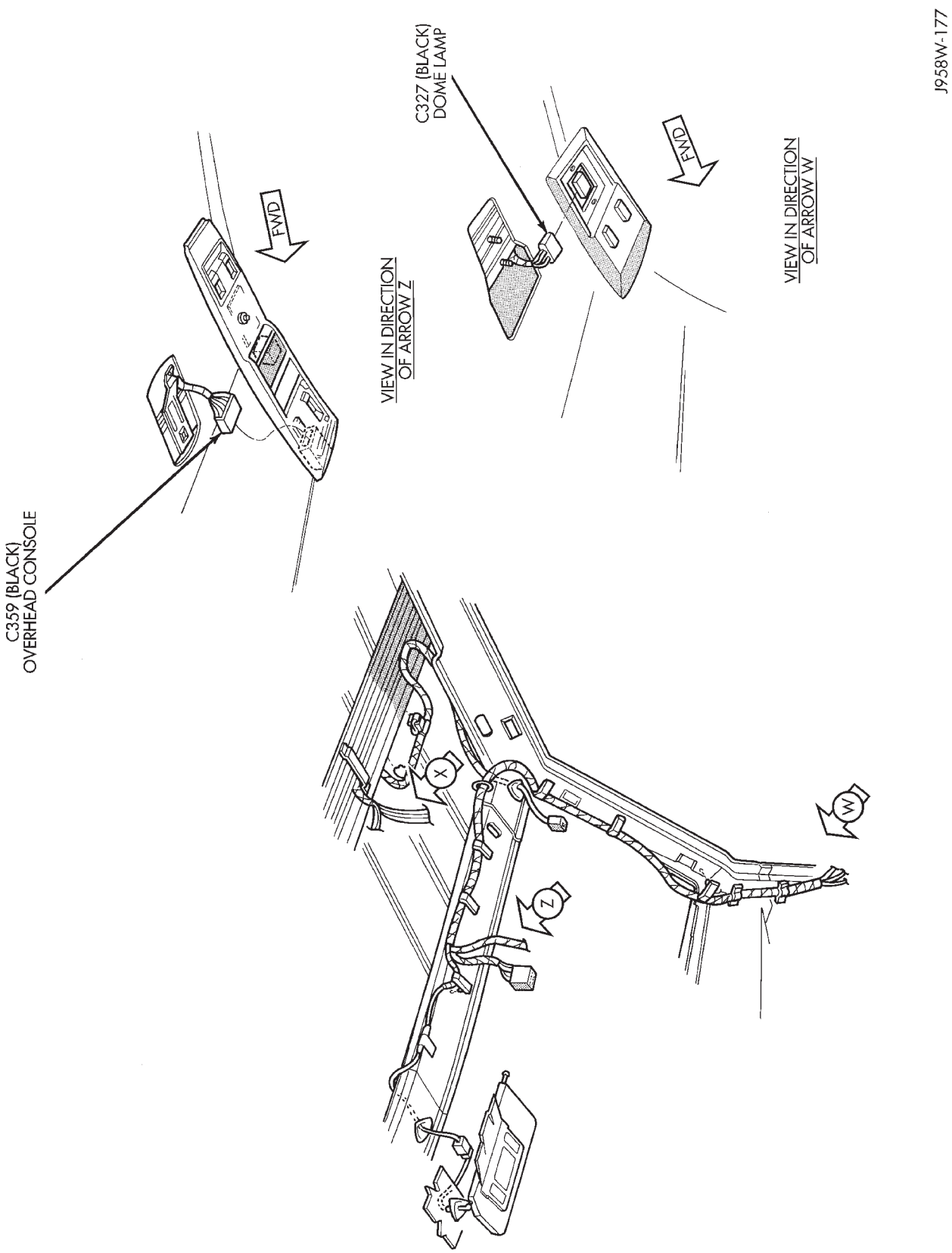

Fig. 11 Overhead Console

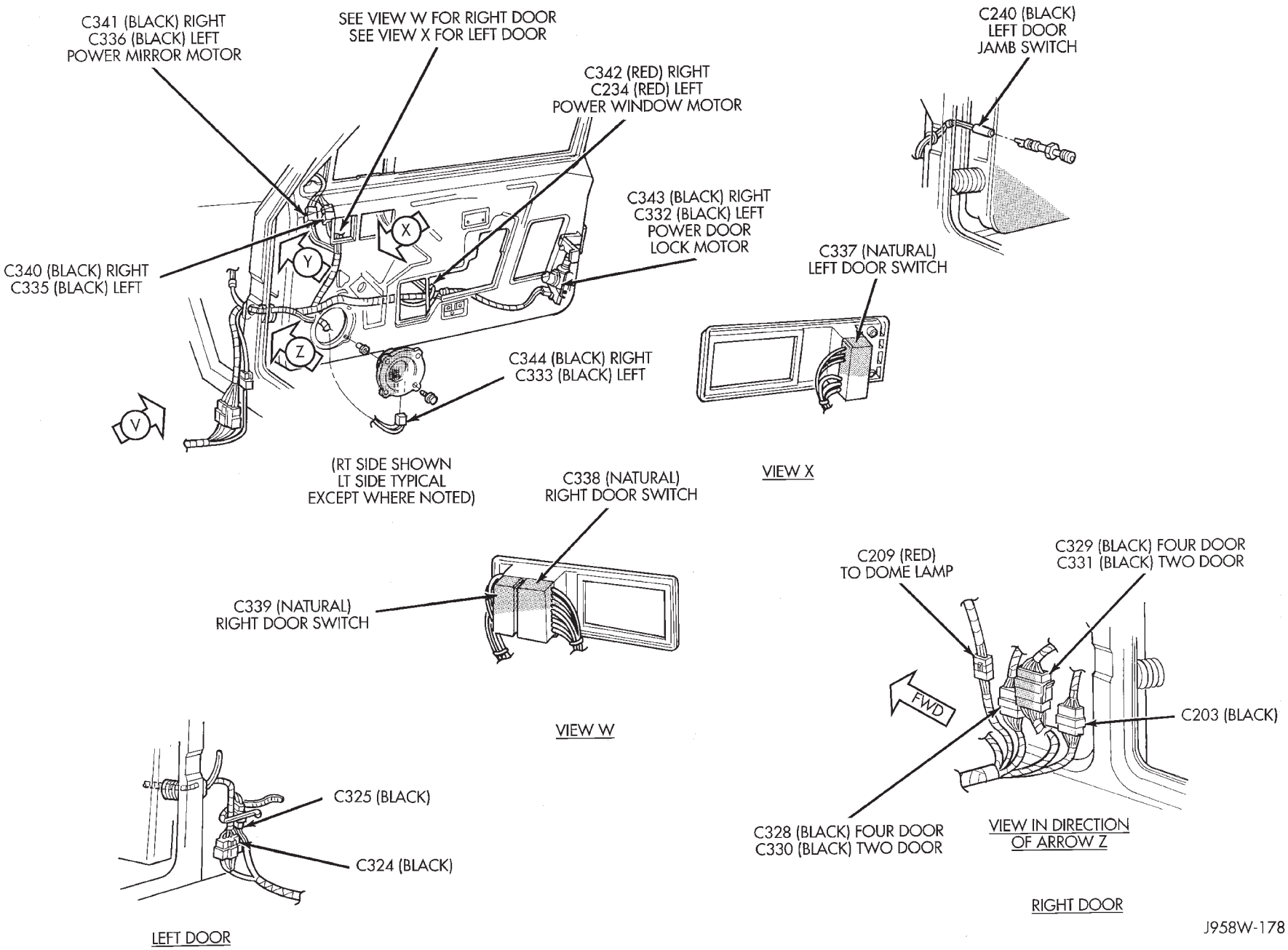

Fig. 12 Front Door Wiring Connectors

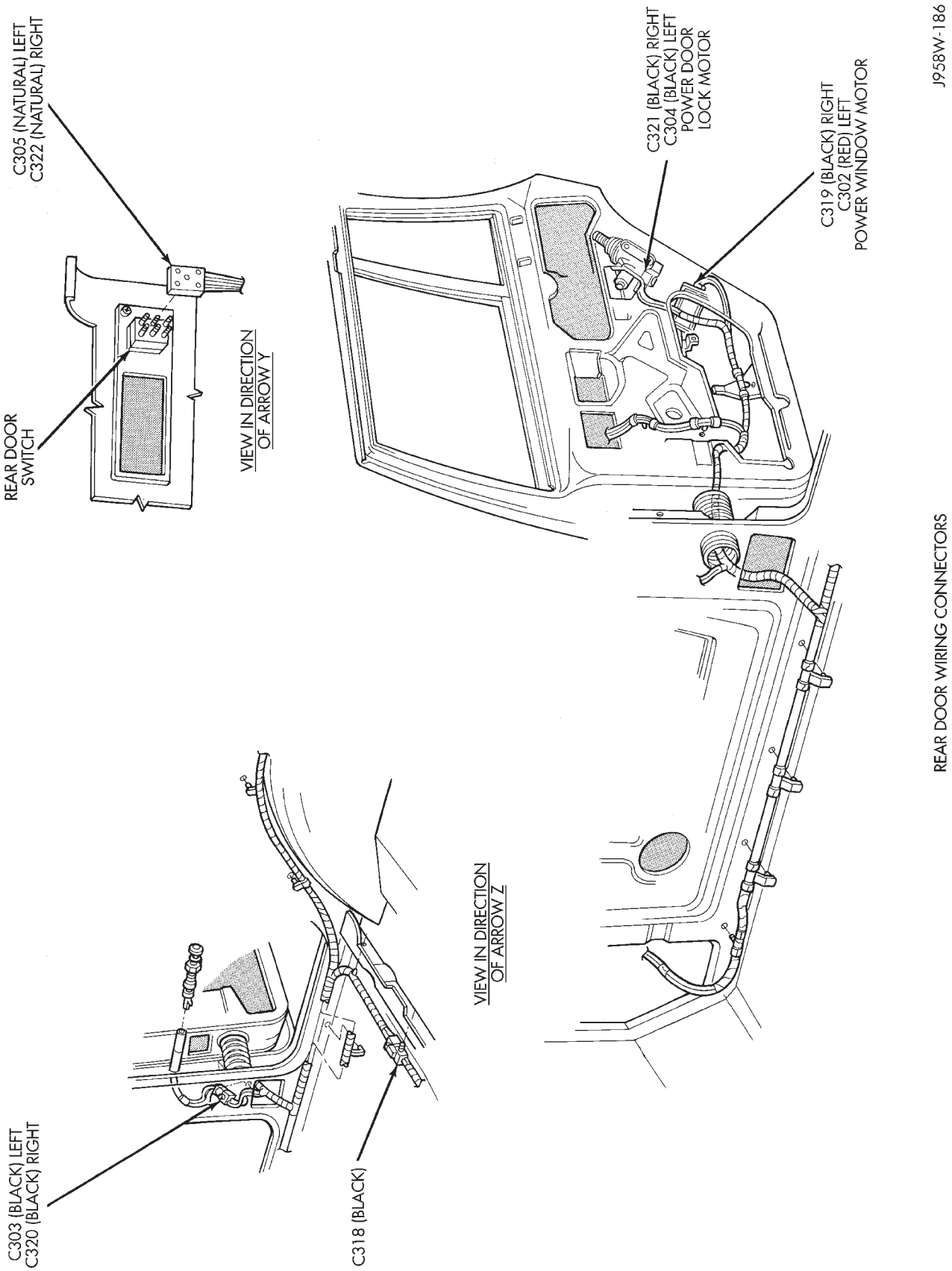

Fig. 13 Rear Door Wiring Connectors

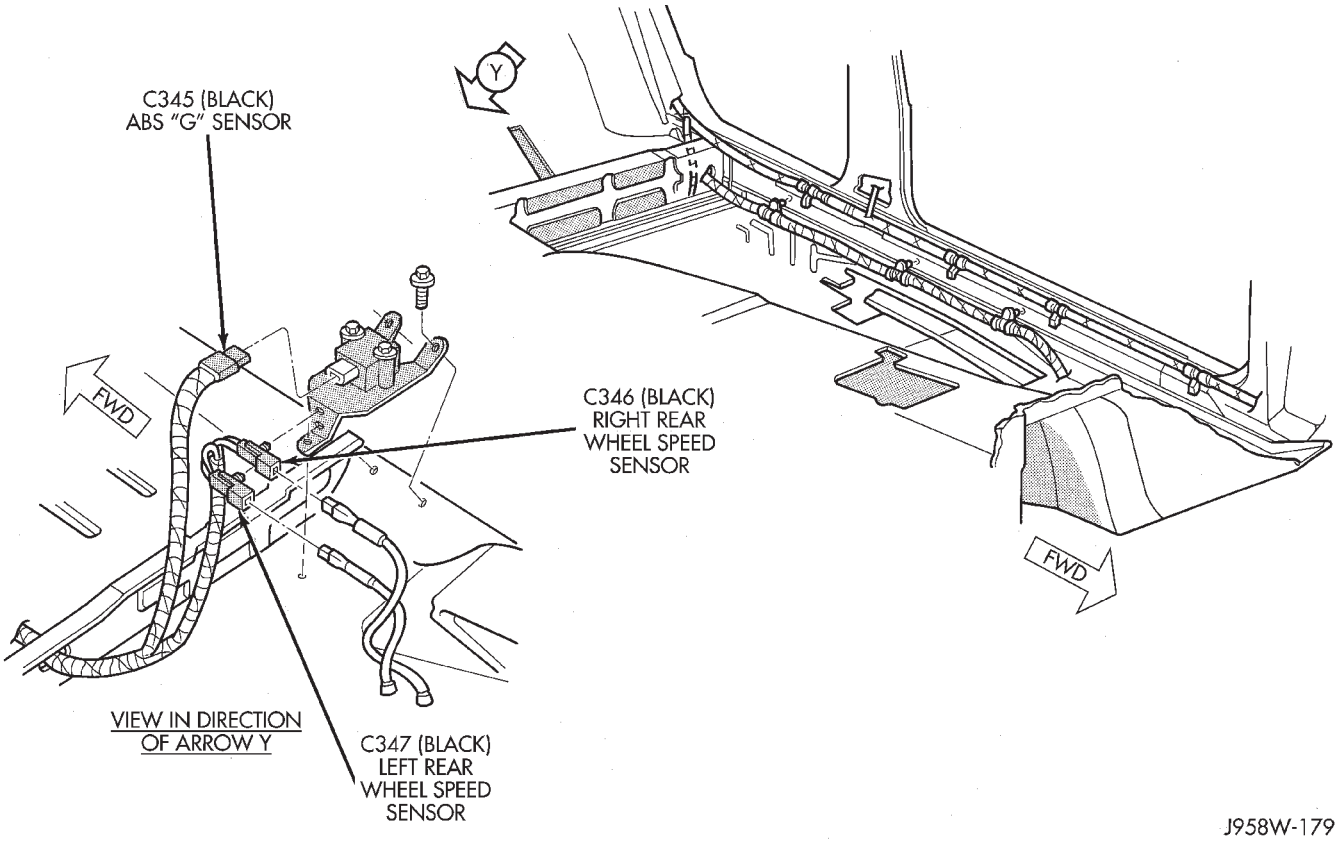

Fig. 14 ABS Wheel Speed Sensor Connectors

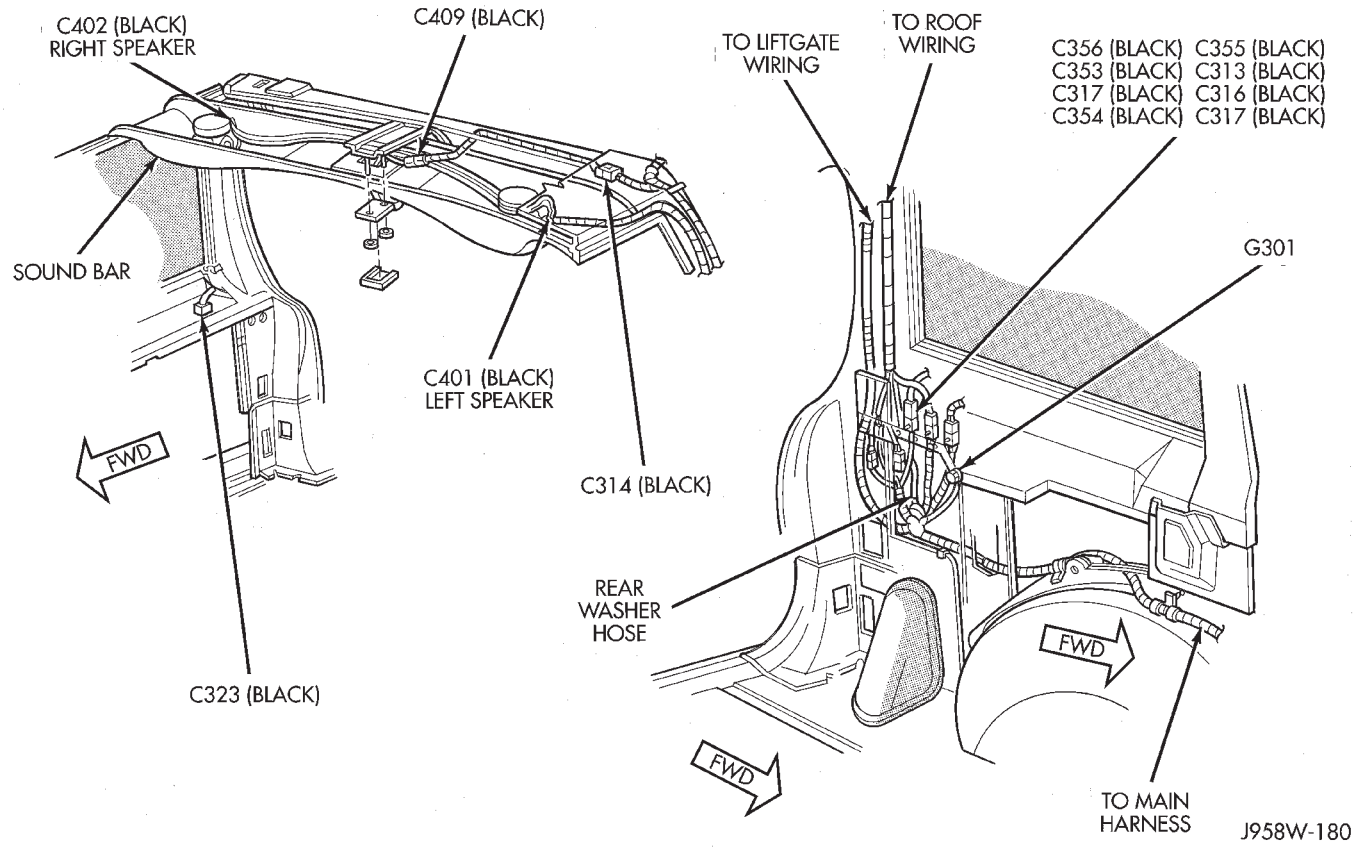

Fig. 15 Rear Wiring Connectors

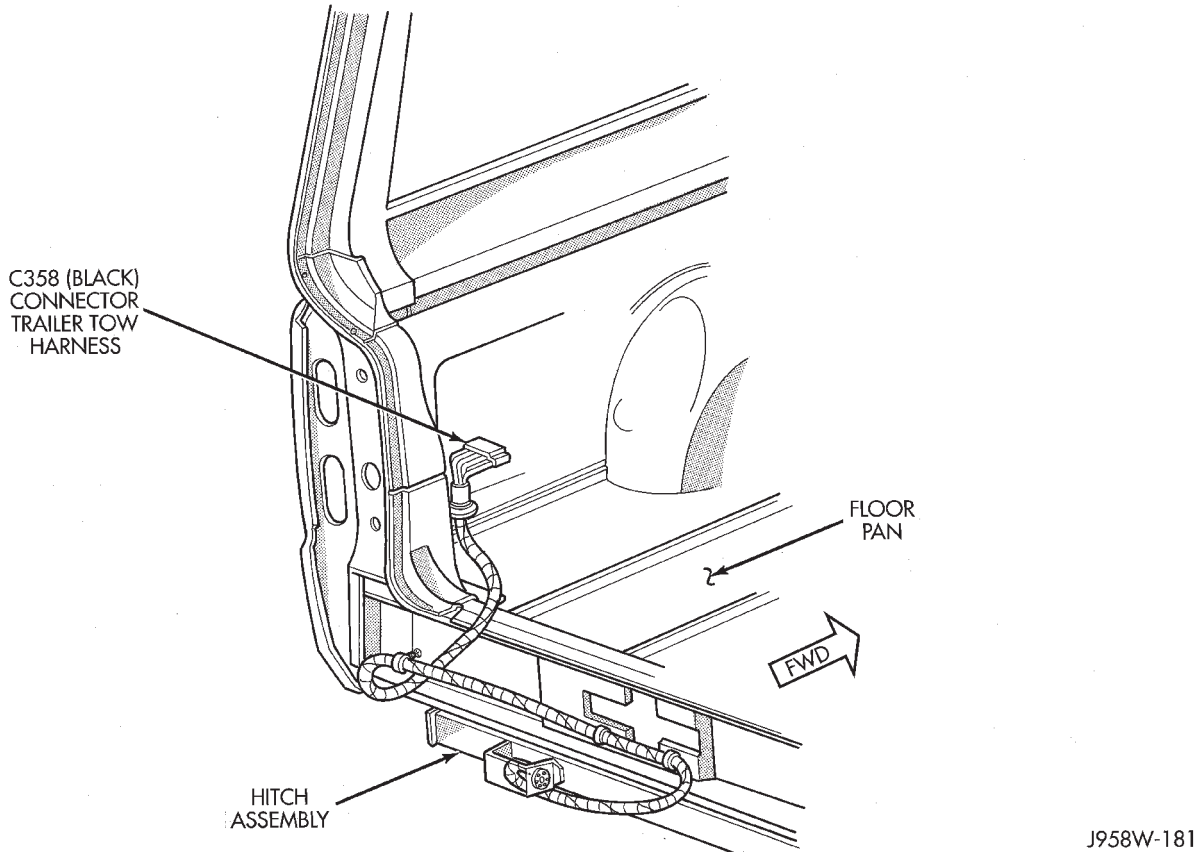

Fig. 16 Trailer Tow Wiring Connector

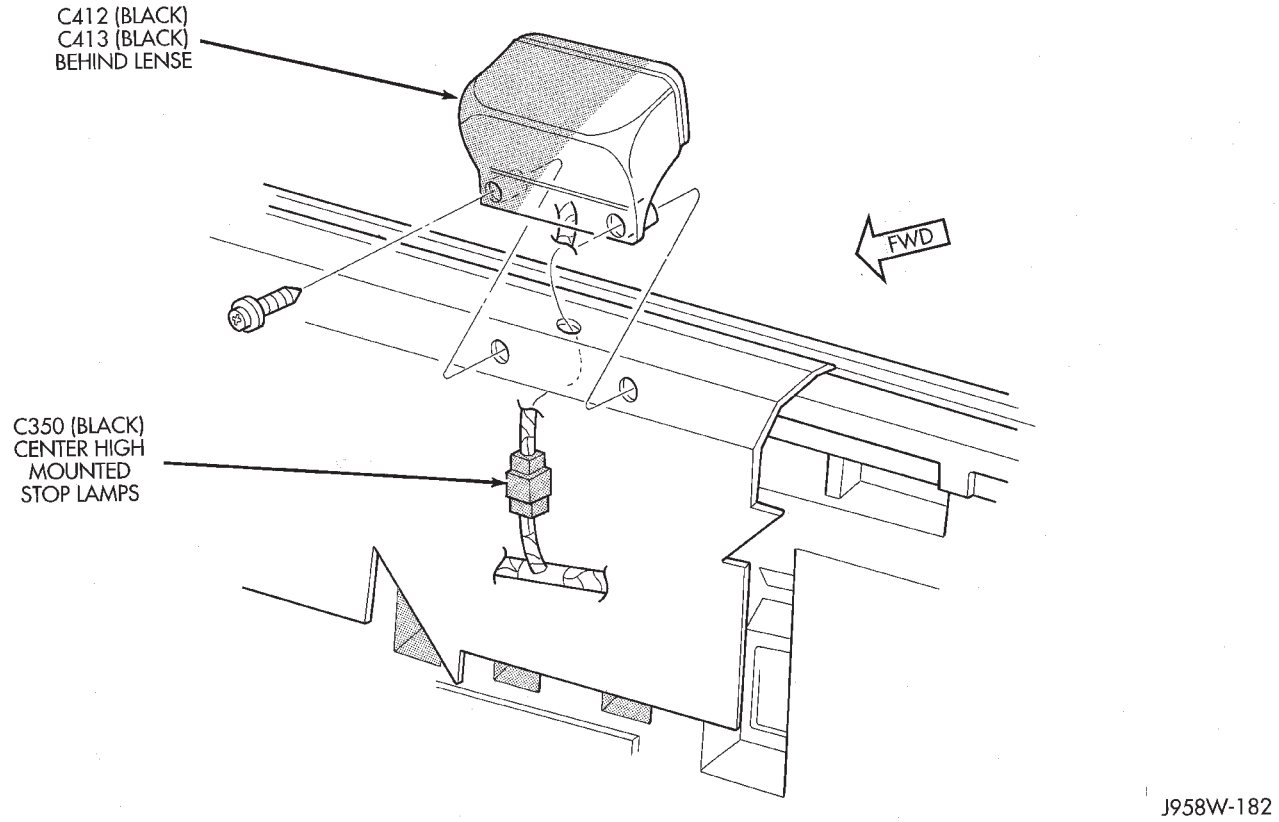

Fig. 17 Center High Mounted Stop Lamps

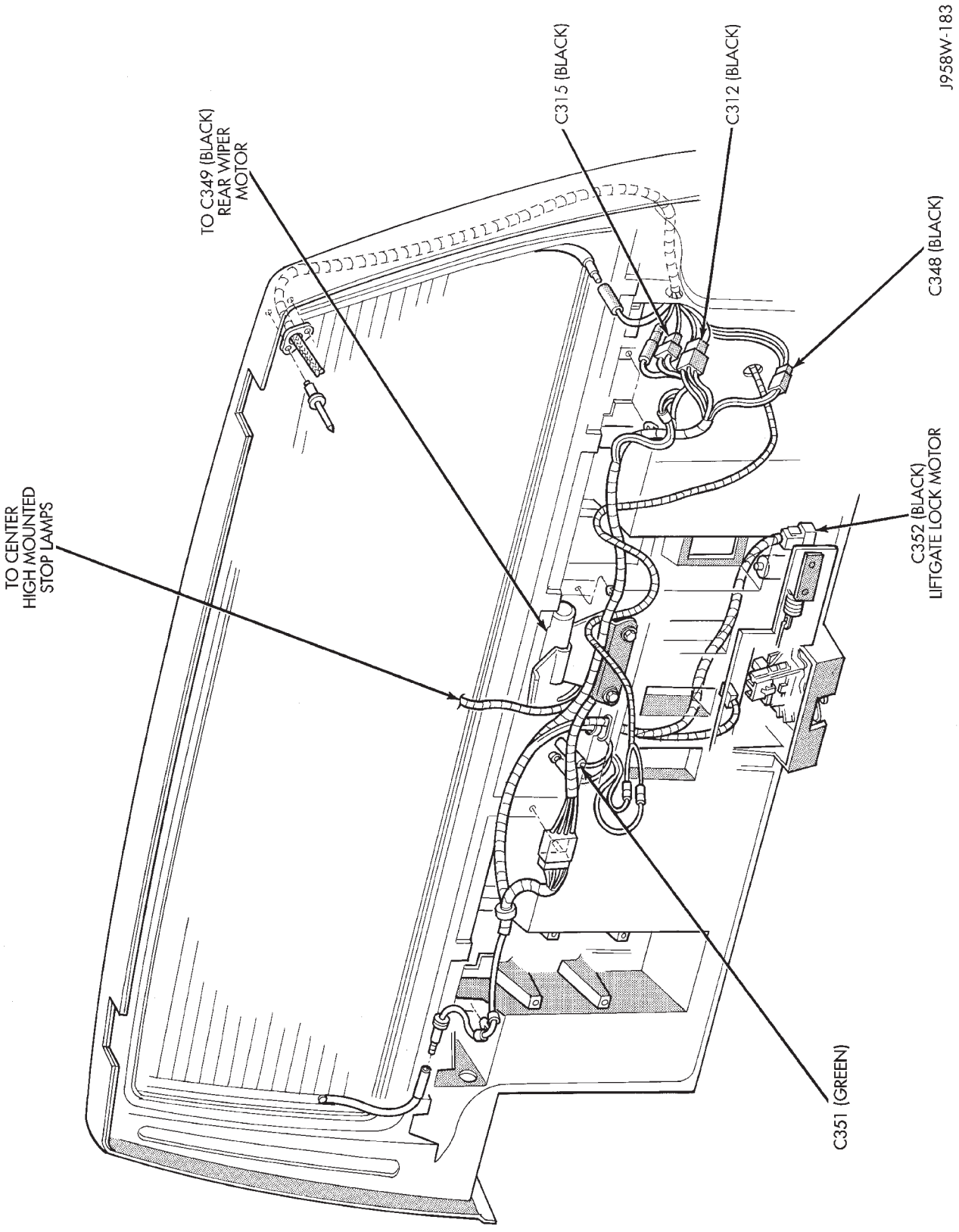

Fig. 18 Liftgate Wiring Connectors

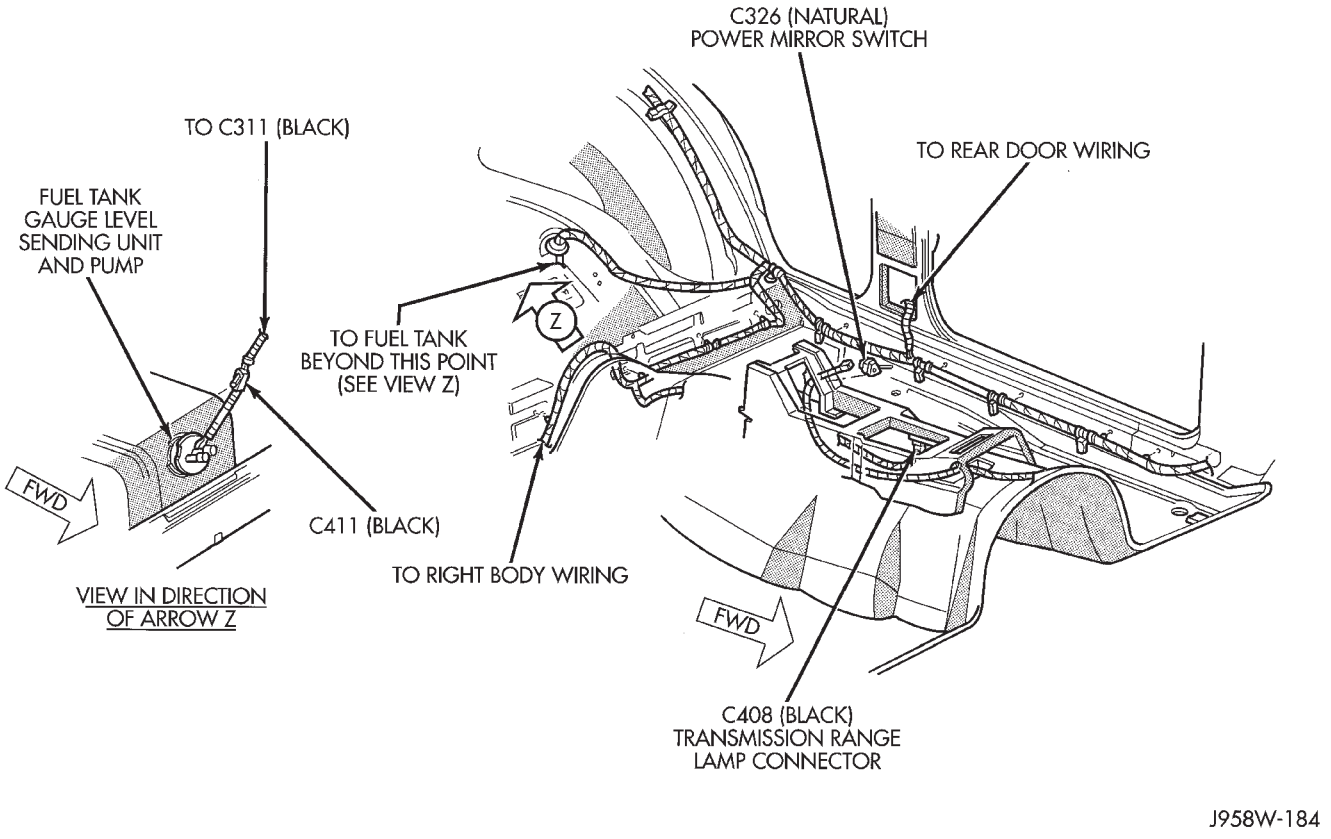

Fig. 19 Floor Console Wiring Connectors

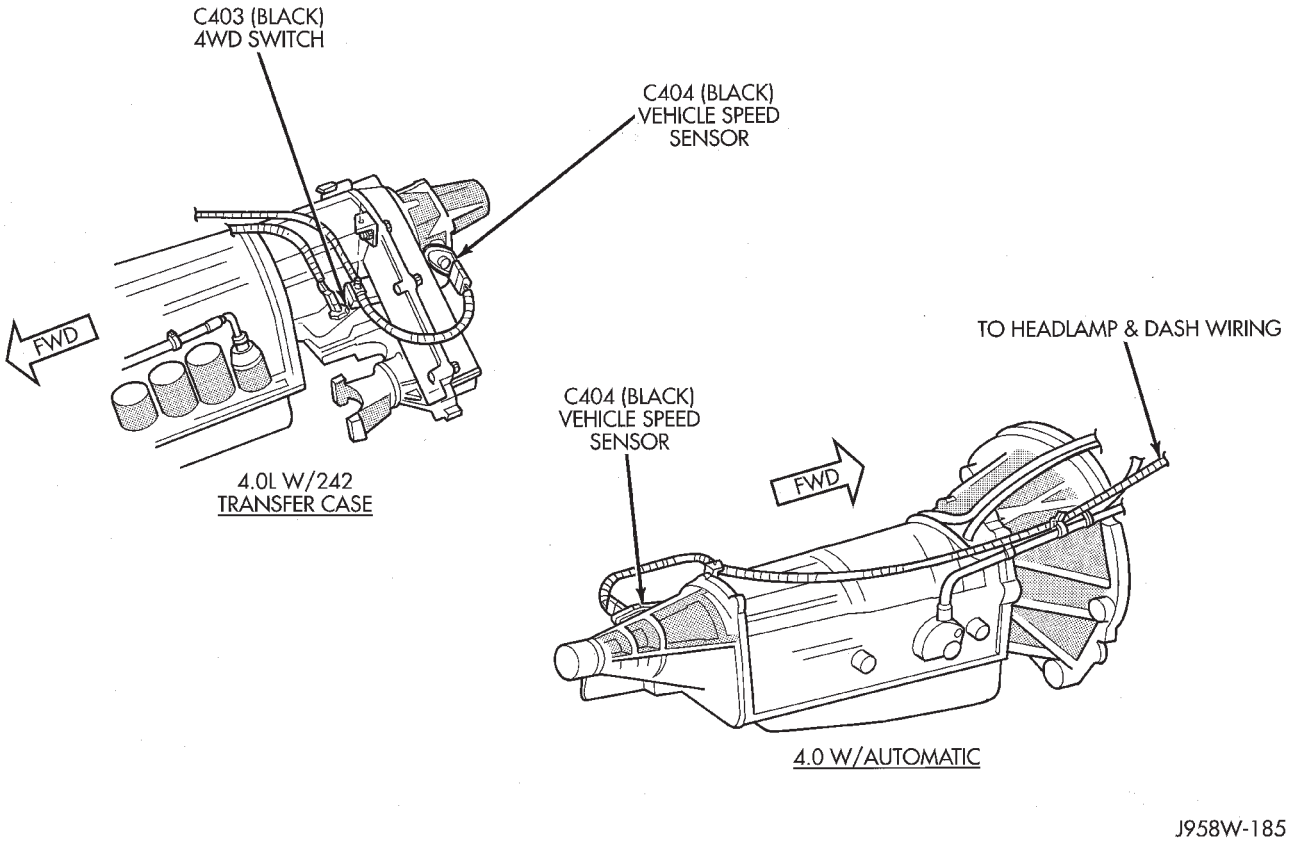

Fig. 20 Transmission Wiring Connectors

SPLICE LOCATIONS

GENERAL INFORMATION

This section provides illustrations identifying the general location of the splices in this vehicle. A splice index is provided. Use the wiring diagrams in each section for splice number identification. Refer to the index for the proper splice number.

SPLICE LOCATIONS

Splice Number	Locations	Fig.
S101	In T/O for Horn and Radiator Fan Motor	2
S102	Before T/O for A/C Low Pressure Switch	2
S103	Before T/O for A/C Low Pressure Switch	2
S104	After T/O for A/C Low Pressure Switch	2
S105	After T/O for A/C Low Pressure Switch	2
S106	Before T/O for MAP Sensor	2
S107	Before T/O for MAP Sensor	2
S108	Before T/O for Injector No. 4	4
S109	Before T/O for Injector No. 6	4
S110	After T/O for MAP Sensor	2
S111	After T/O for MAP Sensor	2
S112	After T/O for Injectors	3
S113	After T/O for Injectors	3
S114	Before T/O for Brake Warning Switch	3
S115	Before T/O for Brake Warning Switch	3
S116	Before T/O for Brake Warning Switch	3
S117	In T/O for Dash Connectors, Before Grommet	3
S118	In T/O for Dash Connectors, Before Grommet	3
S119	In T/O for ABS Control Module, After Grommet	5
S120	After T/O for Underhood Lamp	3
S121	Before T/O for PDC	3
S122	Before T/O for PDC	3
S123	Before T/O for Ambient Air Temperature Sensor	3
S124	Near T/O for Ignition Coil and Generator	4
S125	After T/O for Left Fog Lamp	1
S126	Near Clip for Middle of Gille Opening	1
S127	Before T/O for Right Fog Lamp	1
S201	Before T/O for Right Door Speaker (With ABS)	6
S201	Before T/O for Right Door Speaker (Without ABS)	6
S202	Before T/O for Right Door Speaker (With ABS)	6
S202	Before T/O for Right Door Speaker (Without ABS)	6
S203	After T/O for Right Door Jamb Switch (With ABS)	6
S204	Before T/O for Stop Lamp Switch (With ABS)	6
S205	Before T/O for Stop Lamp Switch (With ABS)	6
S205	Before T/O for Stop Lamp Switch (Without ABS)	6
S206	Before T/O for Stop Lamp Switch (With ABS)	6
S206	After T/O for Heated Rear Window Switch and Fog Lamp Switch (Without ABS)	6
S207	Before T/O for Headlamp Switch (With ABS)	6
S208	In T/O for Heated Rear Window Switch and Fog Lamp Switch (With ABS)	6
S208	Before T/O for Headlamp Switch (Without ABS)	6
S209	After T/O for Heated Rear Window Switch and Fog Lamp Switch (With ABS)	6
S209	After T/O for Right Door Jamb Switch (Without ABS)	6
S210	After T/O for Heated Rear Window Switch and Fog Lamp Switch (With ABS)	6
S210	Before T/O for Headlamp Switch (Without ABS)	6
S211	After T/O for Antenna (With ABS)	6
S211	After T/O for A/C-Heater Mode Switch (Without ABS)	6
S212	In T/O for Relay Center (With ABS)	6
S212	In T/O for Relay Center (Without ABS)	6
S213	In T/O for Relay Center (With ABS)	6
S214	After T/O for Wiper Switch (With ABS)	6
S214	After T/O for A/C-Heater Mode Switch (Without ABS)	6
S215	After T/O for A/C-Heater Blower Motor Switch (With ABS)	6
S216	After T/O for A/C-Heater Mode Switch (With ABS)	6
S216	After T/O for A/C-Heater Blower Motor Switch (Without ABS)	6
S217	After T/O for A/C-Heater Mode Switch (With ABS)	6
S217	After T/O for A/C-Heater Mode Switch (Without ABS)	6
S218	After T/O for A/C-Heater Mode Switch (With ABS)	6
S218	In T/O for Relay Center (Without ABS)	6
S219	After T/O for Glove Box (With ABS)	6
S220	After T/O for A/C-Heater Mode Switch (With ABS)	6
S220	After T/O for A/C-Heater Mode Switch (Without ABS)	6
S221	After T/O for Blower Motor Resistor Block (With ABS)	6
S222	Before T/O for Stop Lamp Switch (Without ABS)	6
S223	After T/O for Heated Rear Window Switch and Fog Lamp Switch (Without ABS)	6
S224	After T/O for Glove Box (Without ABS)	6
S301	Bottom of Left Front Door Opening	9
S302	Bottom of Left Front Door Opening	9
S303	Bottom of Left Front Door Opening	9
S304	Bottom of Left Front Door Opening	9

Splice Number	Locations	Fig.
S305	In T/O for Fuel Tank Module	9
S306	On Left Rear Wheel Well	9
S307	Before T/O for Right Rear Door Switch	9
S308	After T/O for Left Front Door Harness Connectors	7
S309	After T/O for Left Front Door Harness Connectors	7
S310	After T/O for Left Front Door Harness Connectors	7
S311	In T/O for Electric Mirror Switch	7
S312	After Right Front Door Grommet, Before Power Mirror T/O	8
S313	In Liftgate	12
S314	Left Rear Quarter Panel, Near Trailer Tow Harness Connector	11
S315	Left Rear Quarter Panel, Near Trailer Tow Harness Connector	11
S316	Behind Left Front of Roof Liner	10
S401	In Left Tail Lamp Harness	Not Shown
S402	In Right Tail Lamp Harness	Not Shown
S403	In Left Tail Lamp Harness	Not Shown
S404	In Right Tail Lamp Harness	Not Shown

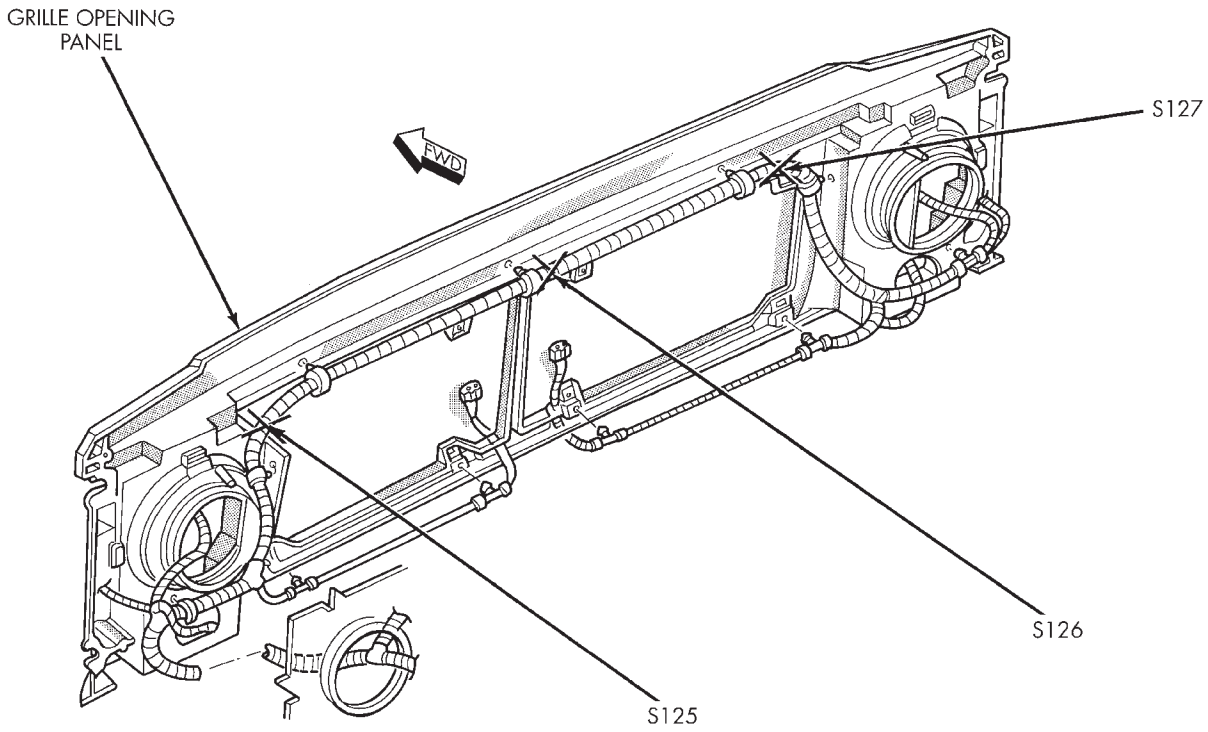

Fig. 1 Front End Lighting Splices XJ-RHD

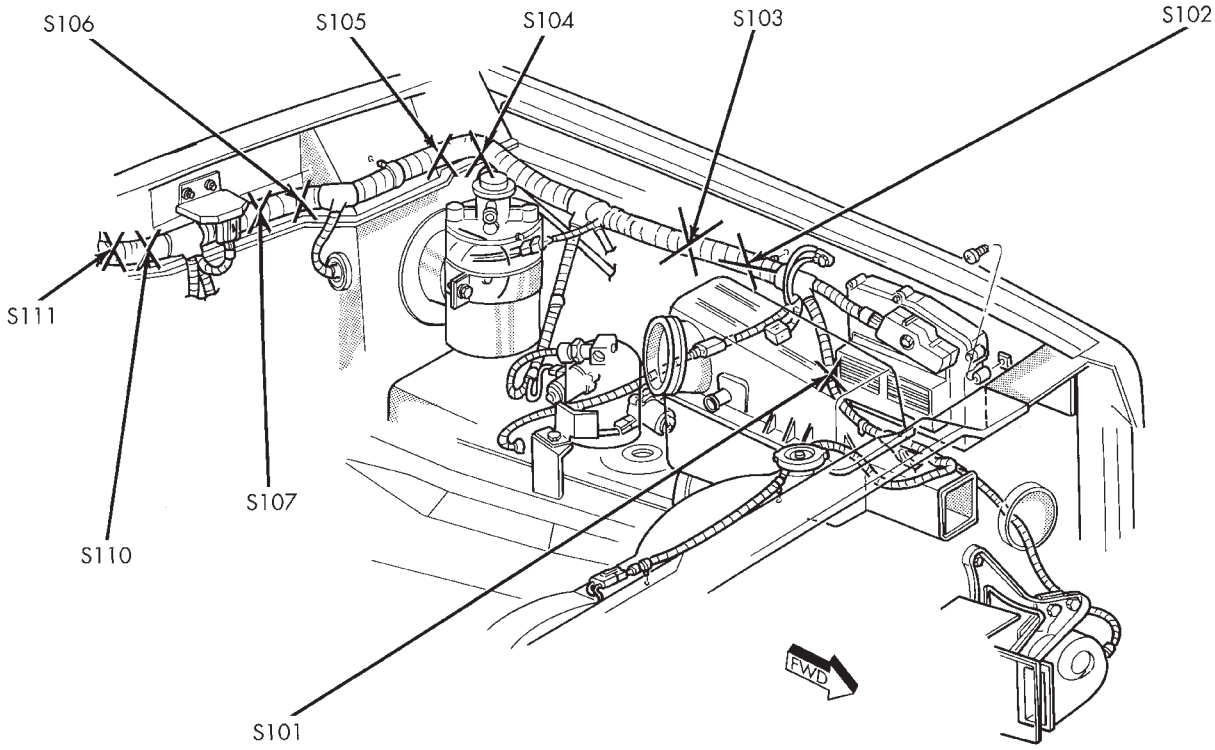

Fig. 2 Engine Compartment Splices, Left Side XJ-RHD

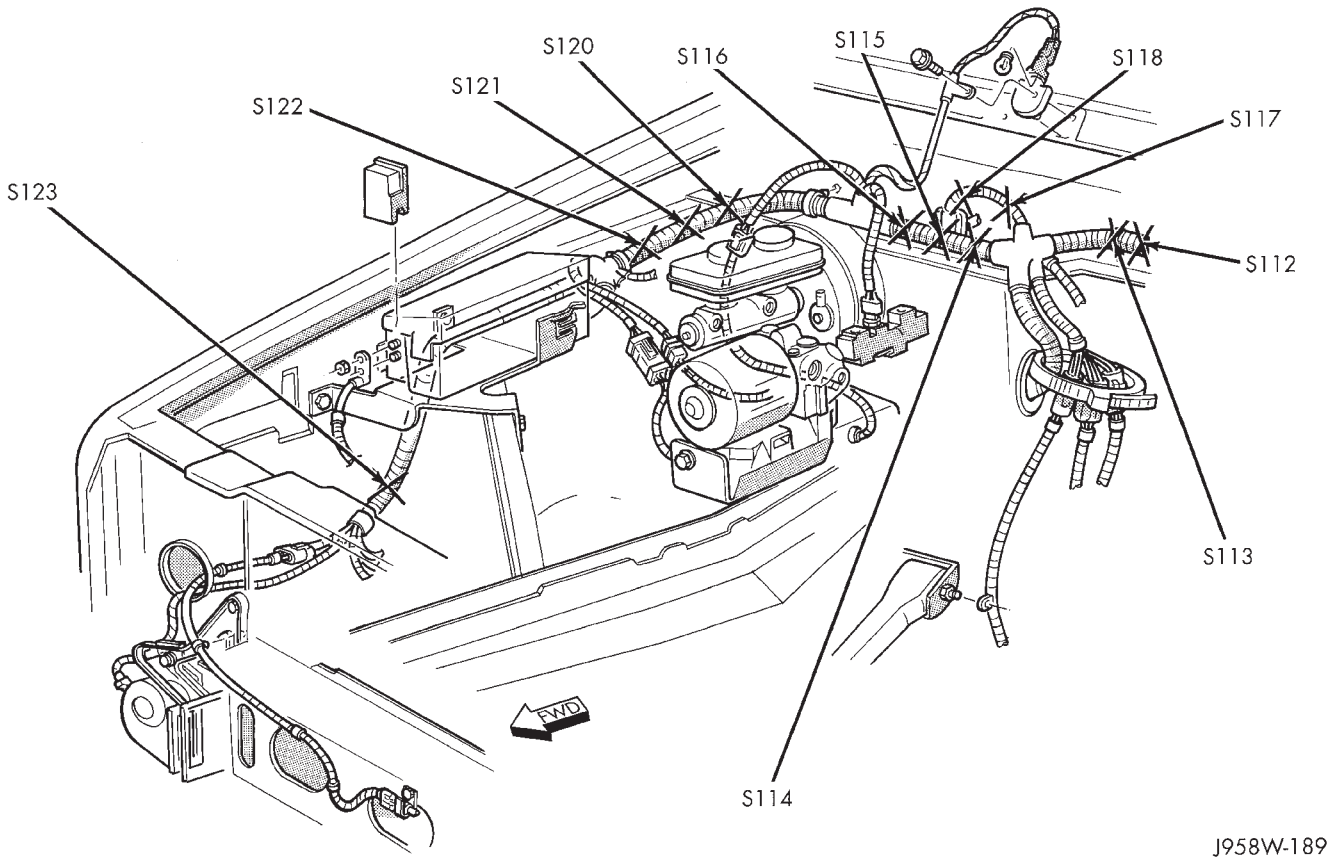

Fig. 3 Engine Compartment Splices, Right Side XJ-RHD

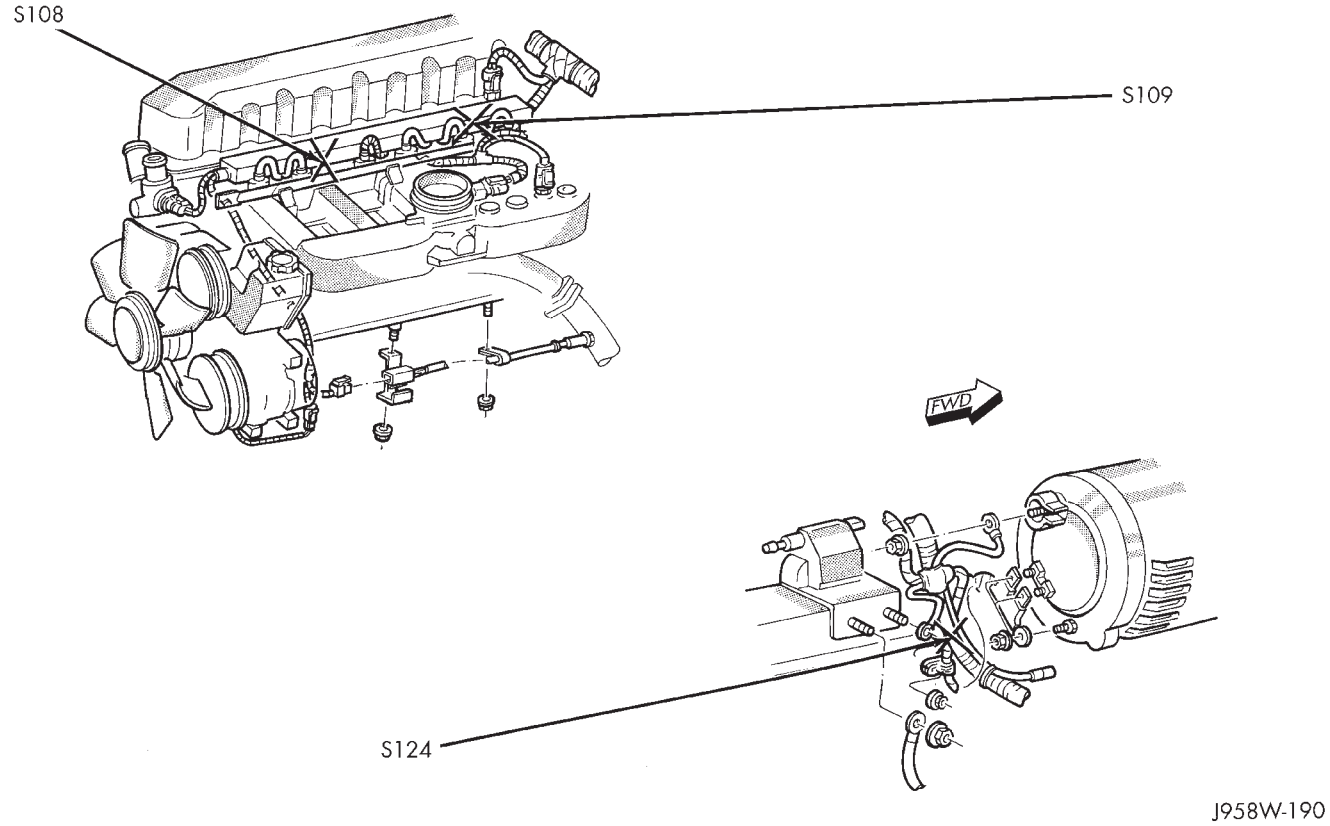

Fig. 4 Engine Splices XJ-RHD

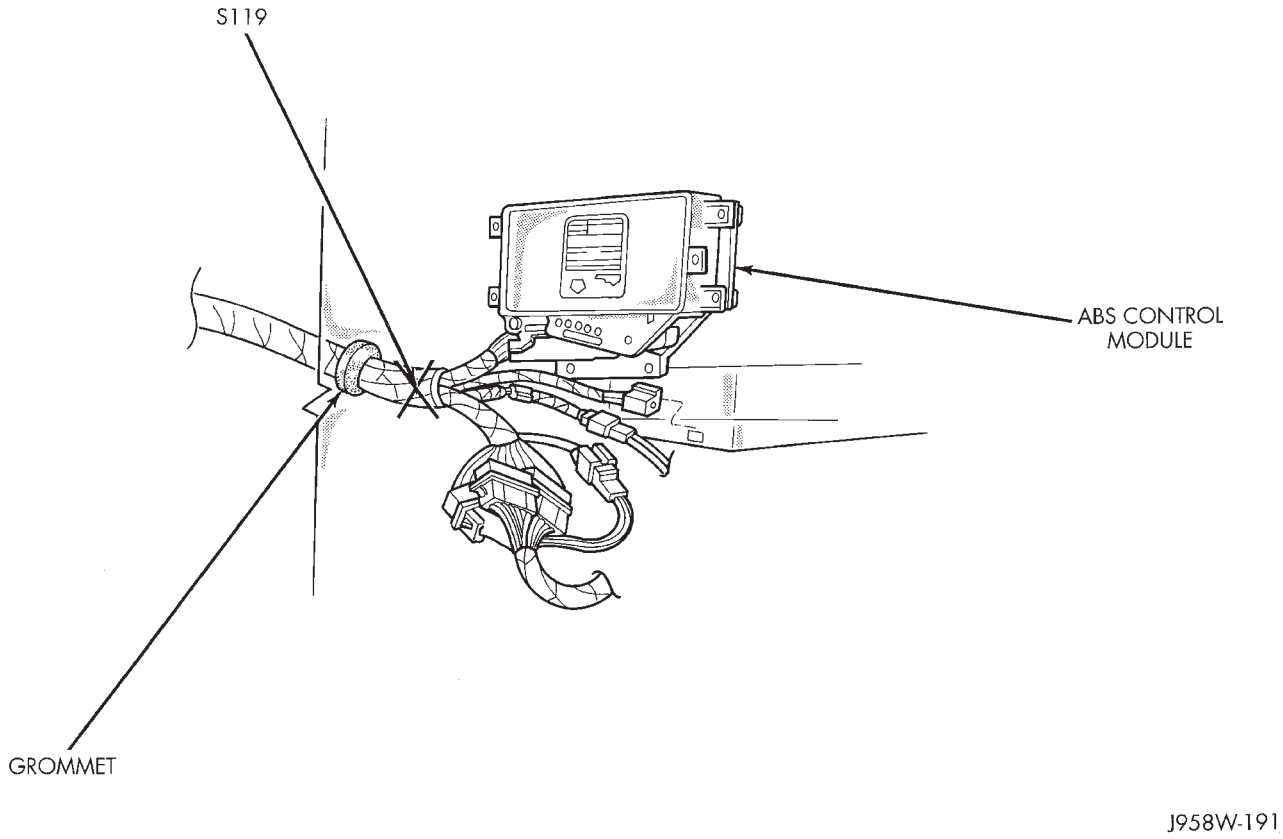

Fig. 5 ABS Control Module XJ-RHD

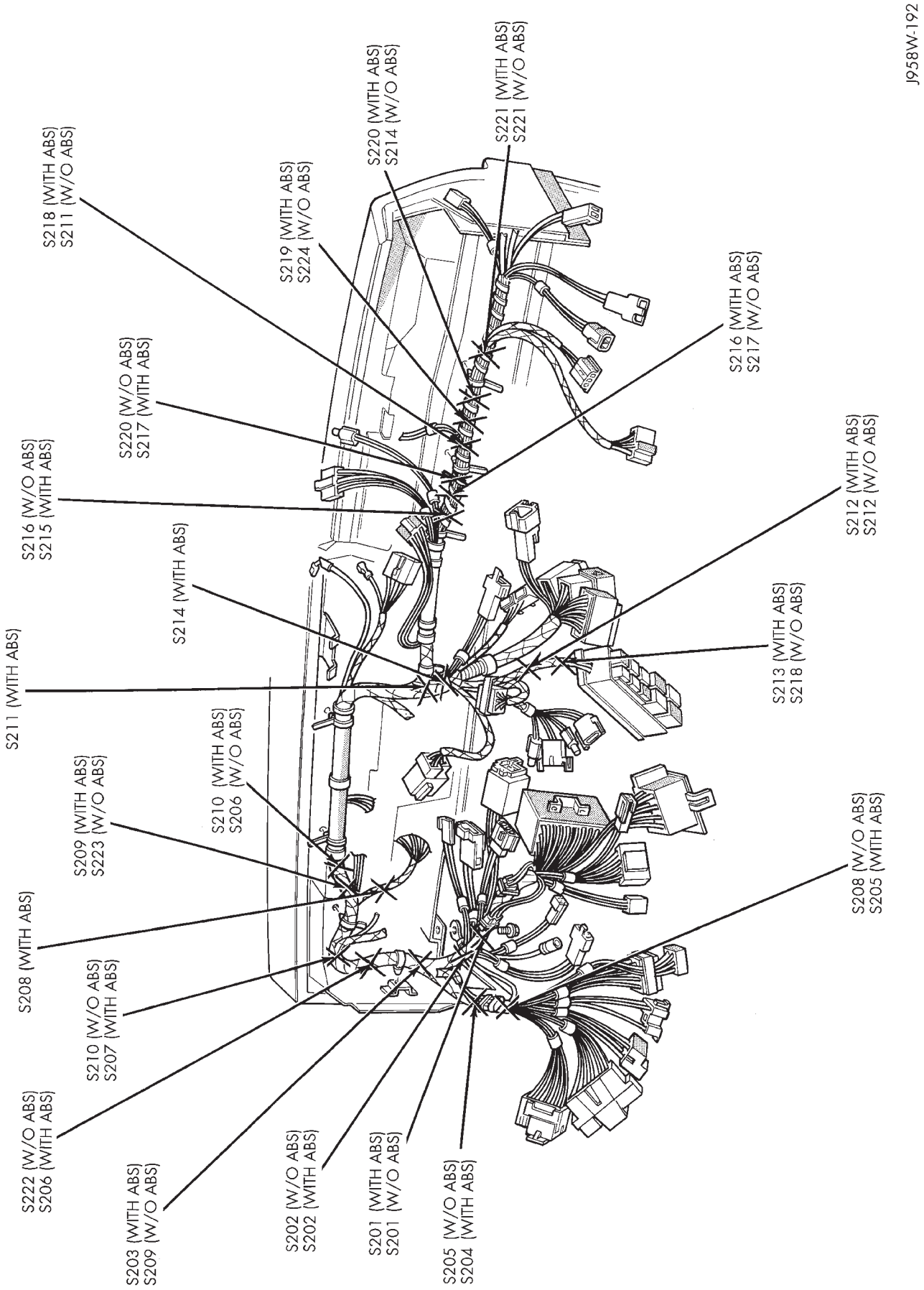

Fig. 6 Instrument Panel Splices XJ-RHD

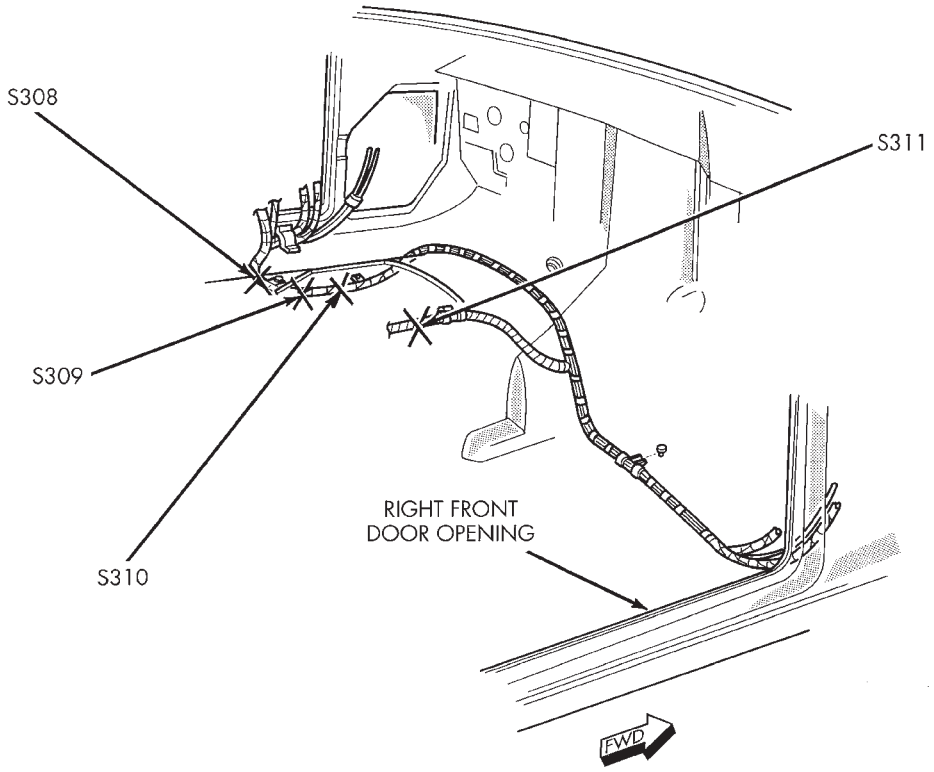

J958W-193

Fig. 7 Crossbody Harness Splices XJ-RHD

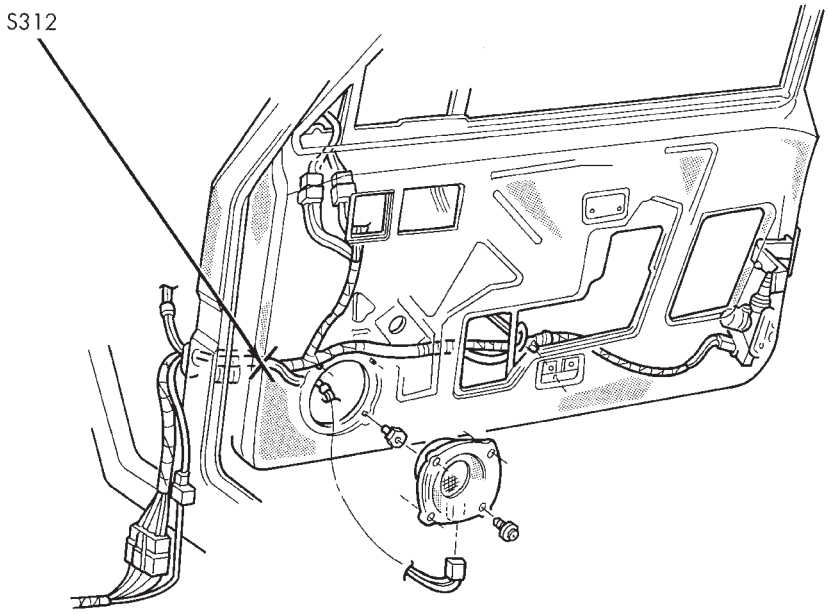

J958W-194

Fig. 8 Right Front Door XJ-RHD

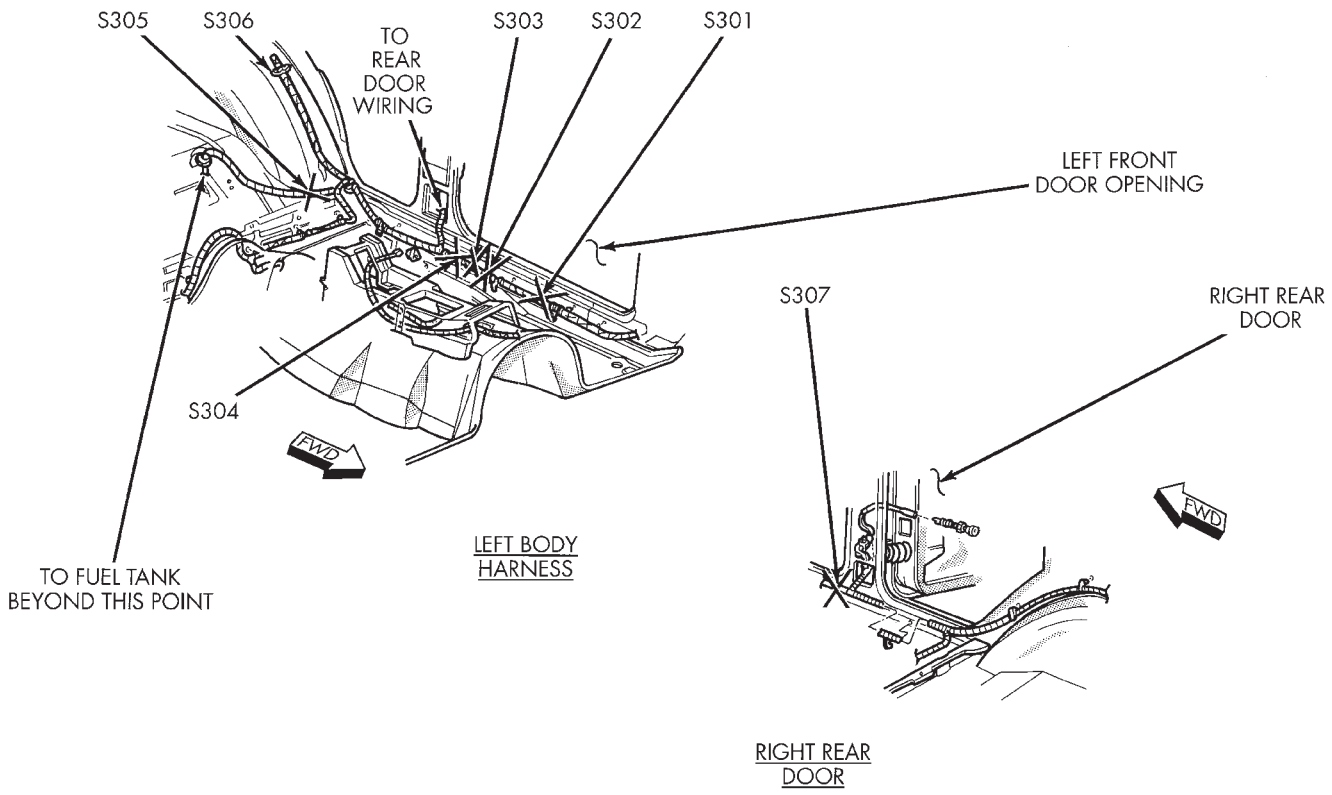

Fig. 9 Left Body Harness and Right Rear Door Splices XJ-RHD

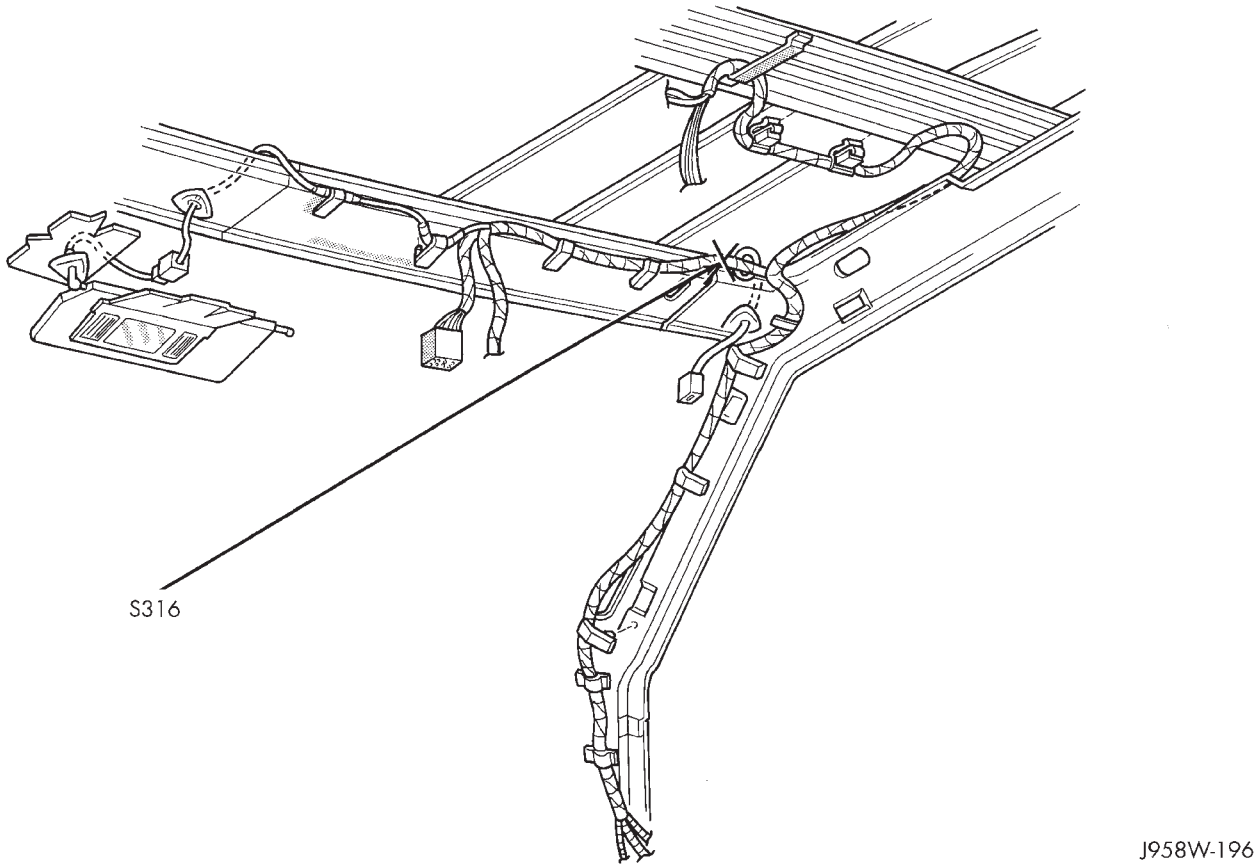

Fig. 10 Overhead Console XJ-RHD

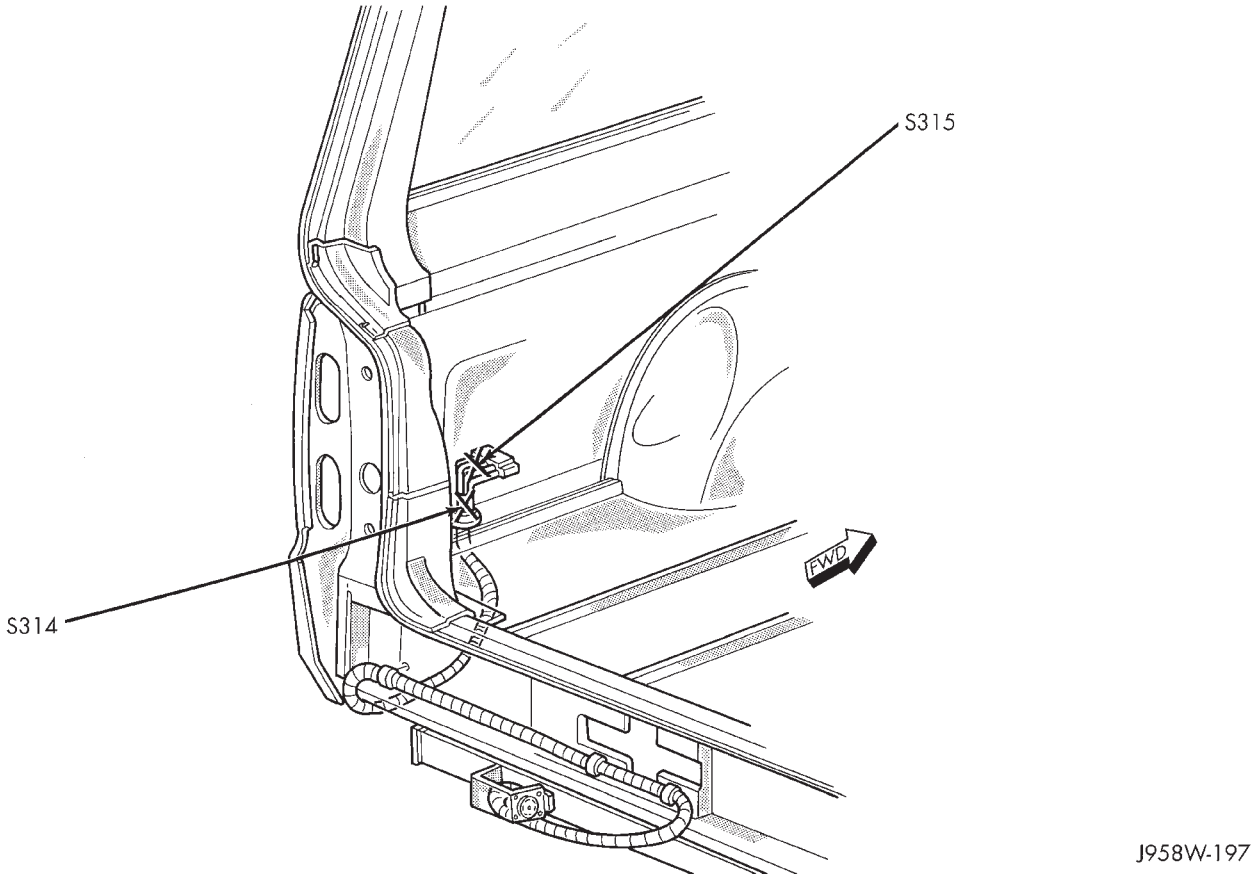

Fig. 11 Trailer Tow Splices XJ-RHD

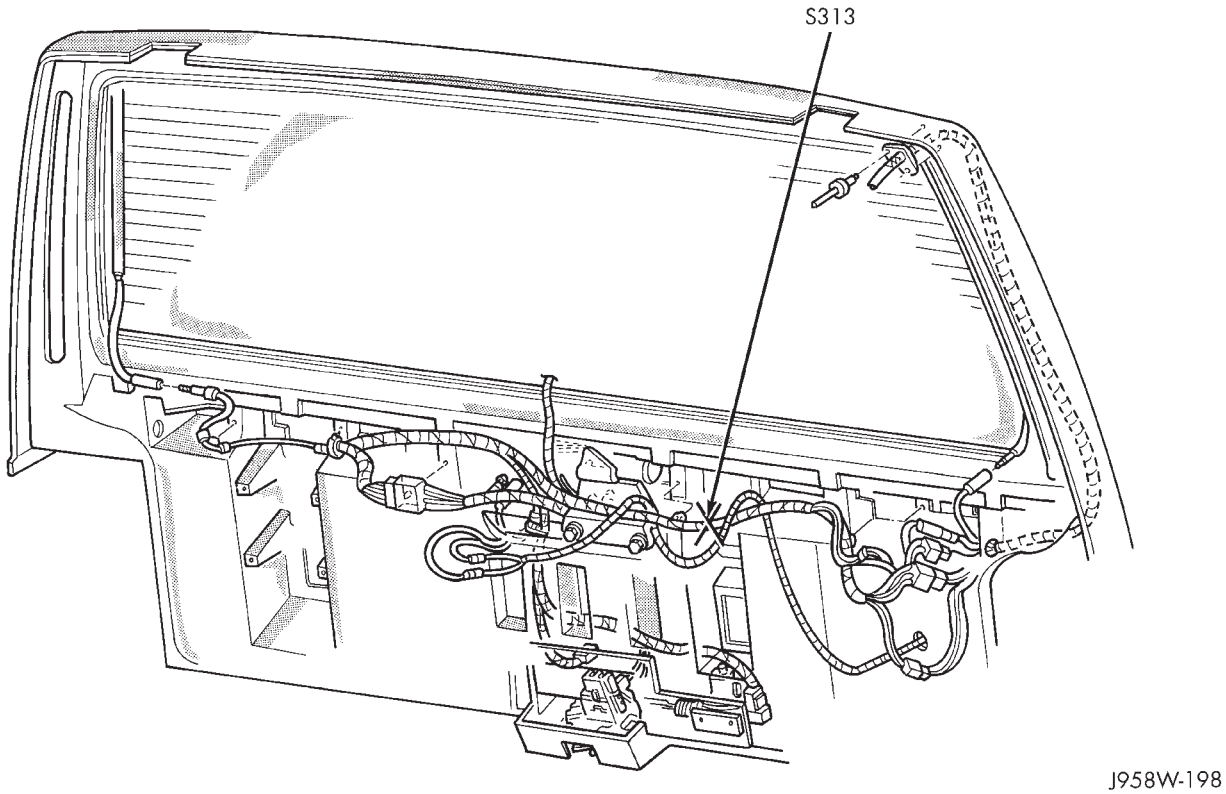

Fig. 12 Liftgate Splices XJ-RHD

WIRING DIAGRAMS

CONTENTS

page

8W-01 GENERAL INFORMATION—WIRING DIAGRAMS 8W-01-1
8W-10 FUSE/FUSE BLOCK 8W-10-1
8W-11 POWER DISTRIBUTION 8W-11-1
8W-15 GROUND DISTRIBUTION 8W-15-1
8W-20 CHARGING SYSTEM 8W-20-1
8W-21 STARTING SYSTEM 8W-21-1
8W-30 FUEL/IGNITION 8W-30-1
8W-31 TRANSMISSION CONTROLS 8W-31-1
8W-32 ANTI-LOCK BRAKES 8W-32-1
8W-40 INSTRUMENT CLUSTER 8W-40-1
8W-41 HORN/CIGAR LIGHTER 8W-41-1

page

8W-42 AIR CONDITIONING/HEATER 8W-42-1
8W-44 INTERIOR LIGHTING 8W-44-1
8W-47 AUDIO SYSTEM 8W-47-1
8W-48 HEATED REAR WINDOW 8W-48-1
8W-50 FRONT LIGHTING 8W-50-1
8W-51 REAR LIGHTING 8W-51-1
8W-52 TURN SIGNALS 8W-52-1
8W-53 WIPERS 8W-53-1
8W-70 SPLICE INFORMATION 8W-70-1
8W-80 CONNECTOR PIN OUTS 8W-80-1
8W-90 CONNECTOR LOCATIONS 8W-90-1
8W-95 SPLICE LOCATIONS 8W-95-1

HOW TO USE THIS GROUP

The purpose of this group is to show the electrical circuits in a clear, simple fashion and to make troubleshooting easier. Components that work together are shown together. All electrical components used in a specific system are shown on one diagram. The feed for a system is shown at the top of the page. All wires, connectors, splices, and components are shown in the flow of current to the bottom of the page. Wiring which is not part of the circuit represented is referenced to another page/section, where the complete circuit is shown. In addition, all switches, components, and modules are shown in the **at rest position with the doors closed and the key removed from the ignition.**

If a component is part of several different circuits, it is shown in the diagram for each. For example, the headlamp switch is the main part of the exterior lighting, but it also affects the interior lighting and the chime warning system.

It is important to realize that no attempt is made on the diagrams to represent components and wiring as they appear on the vehicle. For example, a short piece of wire is treated the same as a long one. In addition, switches and other components are shown as simply as possible, with regard to function only.

The wiring diagram show circuits for all wheel-bases. If there is a difference in systems or components between wheel-bases, an identifier is placed next to the component.

SECTION IDENTIFICATION

Sections in Group 8W are organized by sub-systems. The sections contain circuit operation descriptions, helpful information, and system diagrams. The intention is to organize information by system, consistently from year to year.

CONNECTOR LOCATIONS

Section 8W-90 contains Connector Location illustrations. The illustrations contain the connector number and component identification. Connector Location charts in Section 8W-90 reference the illustration number for components and connectors.

Section 8W-80 shows each connector and the circuits involved with that connector. The connectors are identified using the number on the Diagram pages.

SPLICE LOCATIONS

Splice Location charts in Section 8W-70 show the entire splice, and provide references to other sections the splice serves.

Section 8W-95 contains illustrations that show the general location of the splices in each harness. The illustrations show the splice by number, and provide a written location.

FUSE/FUSE BLOCK

GENERAL INFORMATION

This section covers the Fuse Block and all circuits involved with it. For additional information on system operation, refer to the appropriate section of the wiring diagrams.

DIAGRAM INDEX

Component	Page
Circuit Breaker (Fuse Block Cavity 11)	8W-10-8
Combination Buzzer	8W-10-6
Fuse 1 (Fuse Block)	8W-10-9
Fuse 3 (PDC)	8W-10-4
Fuse 3 (Fuse Block)	8W-10-5
Fuse 4 (Fuse Block)	8W-10-6, 8
Fuse 4 (PDC)	8W-10-8
Fuse 5 (Fuse Block)	8W-10-6
Fuse 6 (Fuse Block)	8W-10-5
Fuse 7 (Fuse Block)	8W-10-8
Fuse 8 (Fuse Block)	8W-10-4
Fuse 9 (Fuse Block)	8W-10-6
Fuse 10 (Fuse Block)	8W-10-5
Fuse 12 (Fuse Block)	8W-10-9
Fuse 13 (PDC)	8W-10-9
Fuse Block	8W-10-3
Gauge Package	8W-10-5, 7
Headlamp Switch	8W-10-4
Ignition Switch	8W-10-6, 8
Instrument Cluster	8W-10-5, 7
Panel Lamp Dimmer Switch	8W-10-5

FUSE NUMBER	AMPS	COLOR	DESCRIPTIONS	SHEET
1	20	YELLOW	REAR WIPERS	8W-10-9
2	——	——	——	
3	15	LT BLUE	STOP LAMPS & BUZZER	8W-10-5
4	15	LT BLUE	TURN SIGNAL LAMPS	8W-10-8
5	10	RED	ASD & FUEL PUMP RELAYS	8W-10-6
6	25	NATURAL	HEATED REAR WINDOW	8W-10-5
7	20	YELLOW	CIGAR LIGHTER & ACCESSORIES	8W-10-8
8	20	YELLOW	RUNNING LAMPS	8W-10-4
9	15	LT BLUE	BUZZER, GAUGES & WARNING LIGHTS & RELAYS & BACKUP LAMPS	8W-10-6
10	5	TAN	PANEL ILLUMINATION LAMPS	8W-10-5
11	5.3 C/B	GOLD	FRONT WIPERS & WASHERS	8W-10-8
12	25	NATURAL	HEATER & A/C	8W-10-9

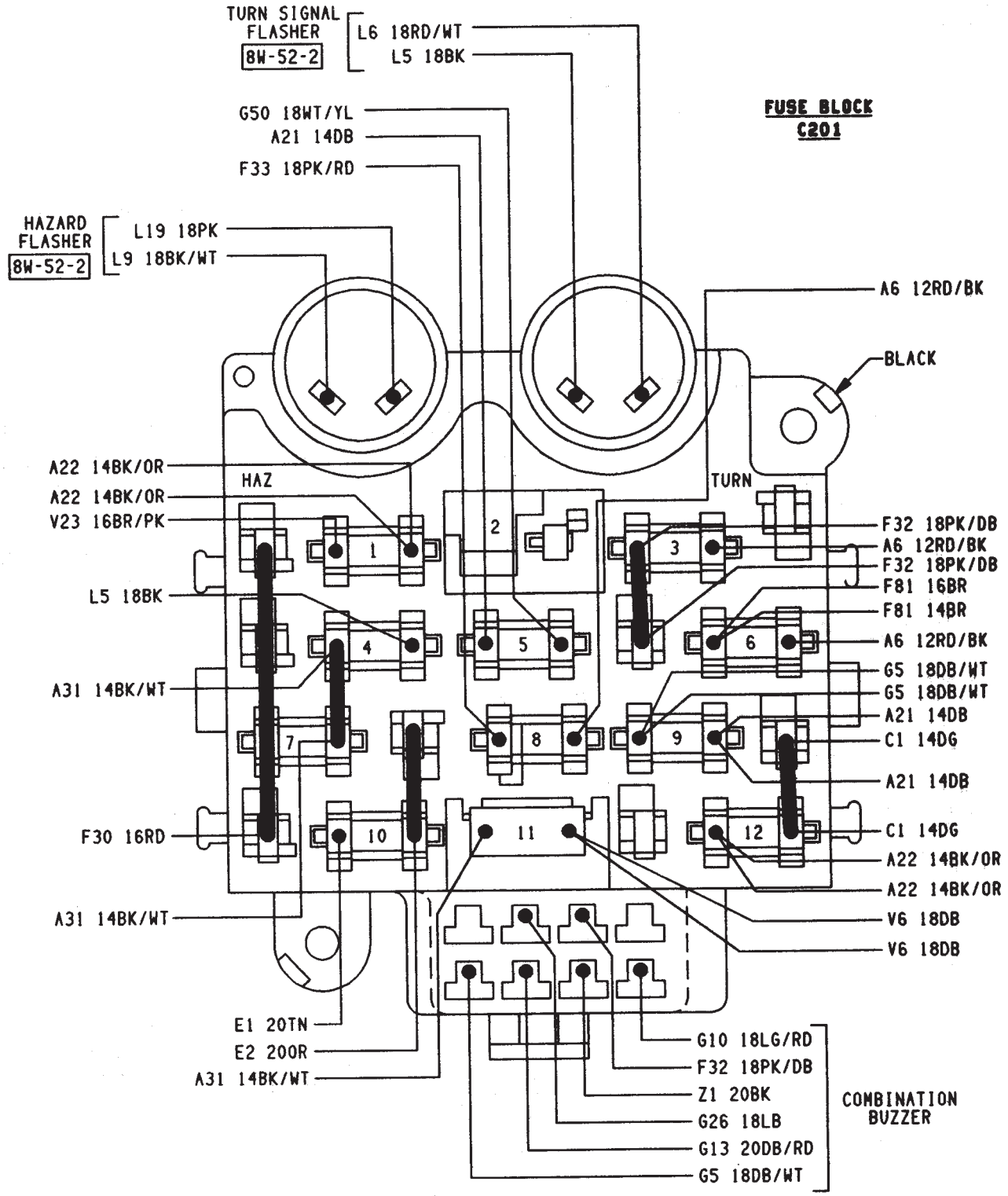
TURN SIGNAL FLASHER
8W-52-2
L6 18RD/WT
L5 18BK
G50 18WT/YL
A21 14DB
F33 18PK/RD
FUSE BLOCK
C201
HAZARD FLASHER
8W-52-2
L19 18PK
L9 18BK/WT
A6 12RD/BK
BLACK
A22 14BK/OR
A22 14BK/OR
V23 16BR/PK
HAZ
TURN
F32 18PK/DB
A6 12RD/BK
F32 18PK/DB
F81 16BR
F81 14BR
L5 18BK
A6 12RD/BK
G5 18DB/WT
G5 18DB/WT
A31 14BK/WT
A21 14DB
C1 14DG
A21 14DB
F30 16RD
C1 14DG
A22 14BK/OR
A22 14BK/OR
A31 14BK/WT
V6 18DB
V6 18DB
E1 20TN
E2 20OR
A31 14BK/WT
G10 18LG/RD
F32 18PK/DB
Z1 20BK
G26 18LB
G13 20DB/RD
G5 18DB/WT
COMBINATION BUZZER
1
2
3
4
5
6
7
8
9
10
11
12

J958W-5

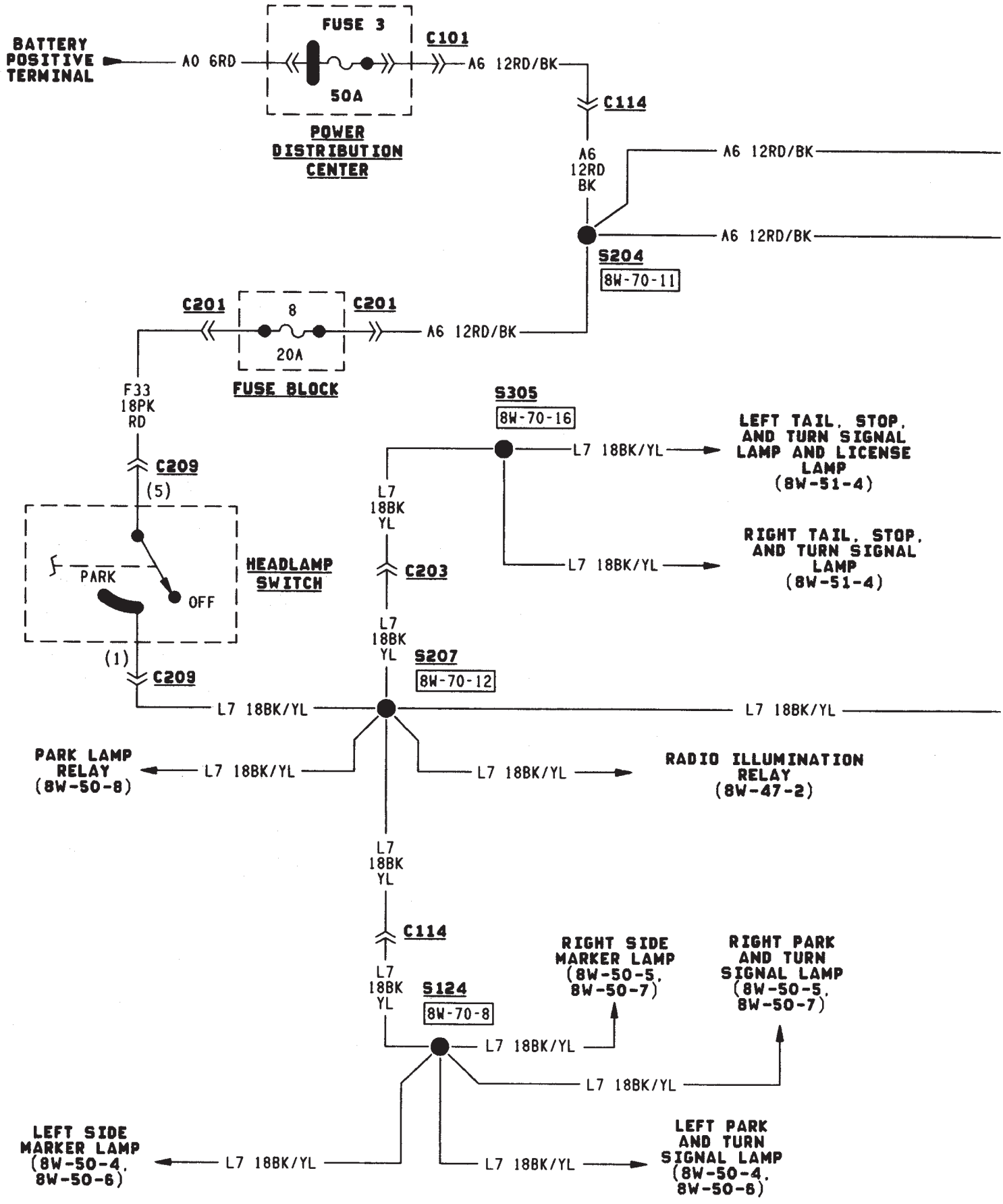
BATTERY POSITIVE TERMINAL
A0 6RD
FUSE 3
50A
C101
A6 12RD/BK
POWER DISTRIBUTION CENTER
C114
A6 12RD BK
A6 12RD/BK
A6 12RD/BK
S204
8W-70-11
C201
8
20A
C201
A6 12RD/BK
FUSE BLOCK
F33 18PK RD
C209
(5)
PARK
OFF
HEADLAMP SWITCH
(1)
C209
S305
8W-70-16
L7 18BK/YL
LEFT TAIL, STOP, AND TURN SIGNAL LAMP AND LICENSE LAMP (8W-51-4)
L7 18BK YL
C203
L7 18BK/YL
RIGHT TAIL, STOP, AND TURN SIGNAL LAMP (8W-51-4)
L7 18BK YL
S207
8W-70-12
L7 18BK/YL
L7 18BK/YL
PARK LAMP RELAY (8W-50-8)
L7 18BK/YL
L7 18BK/YL
RADIO ILLUMINATION RELAY (8W-47-2)
L7 18BK YL
C114
L7 18BK YL
S124
8W-70-8
RIGHT SIDE MARKER LAMP (8W-50-5, 8W-50-7)
RIGHT PARK AND TURN SIGNAL LAMP (8W-50-5, 8W-50-7)
L7 18BK/YL
L7 18BK/YL
LEFT SIDE MARKER LAMP (8W-50-4, 8W-50-6)
L7 18BK/YL
L7 18BK/YL
LEFT PARK AND TURN SIGNAL LAMP (8W-50-4, 8W-50-6)
J958W-5

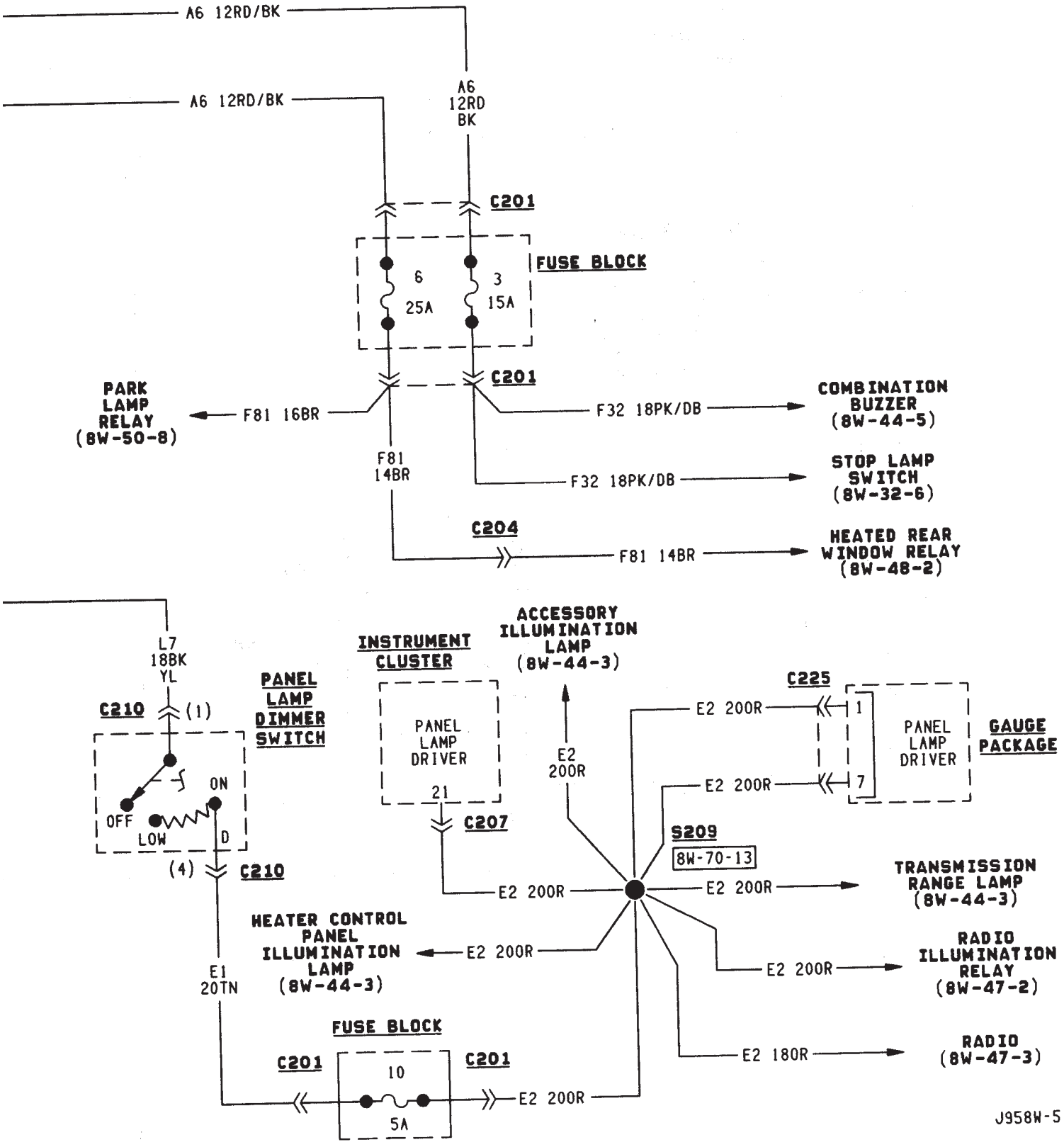
A6 12RD/BK
A6 12RD/BK
A6 12RD BK
C201
FUSE BLOCK
6 25A
3 15A
C201
PARK LAMP RELAY (8W-50-8)
F81 16BR
F32 18PK/DB
COMBINATION BUZZER (8W-44-5)
F81 14BR
F32 18PK/DB
STOP LAMP SWITCH (8W-32-6)
C204
F81 14BR
HEATED REAR WINDOW RELAY (8W-48-2)
L7 18BK YL
C210
(1)
PANEL LAMP DIMMER SWITCH
ON
OFF
LOW
D
(4)
C210
E1 20TN
INSTRUMENT CLUSTER
PANEL LAMP DRIVER
21
C207
ACCESSORY ILLUMINATION LAMP (8W-44-3)
E2 200R
C225
1
7
PANEL LAMP DRIVER
GAUGE PACKAGE
E2 200R
E2 200R
S209
8W-70-13
E2 200R
E2 200R
TRANSMISSION RANGE LAMP (8W-44-3)
HEATER CONTROL PANEL ILLUMINATION LAMP (8W-44-3)
E2 200R
E2 200R
RADIO ILLUMINATION RELAY (8W-47-2)
E2 180R
RADIO (8W-47-3)
FUSE BLOCK
C201
C201
10
5A
E2 200R
J958W-5

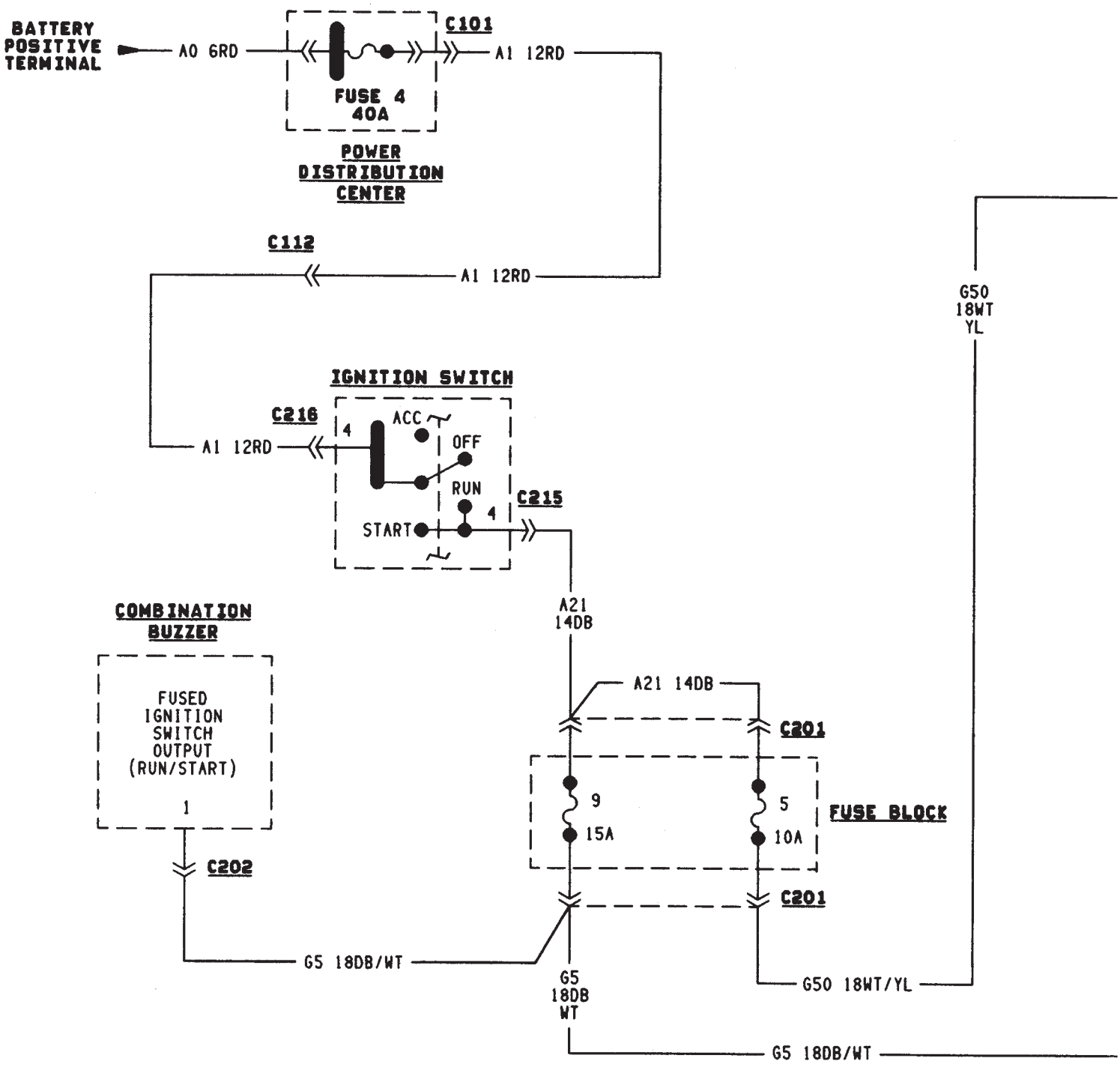
BATTERY POSITIVE TERMINAL
A0 6RD
C101
FUSE 4 40A
A1 12RD
POWER DISTRIBUTION CENTER
C112
A1 12RD
G50 18WT YL
IGNITION SWITCH
C216
4
ACC
OFF
RUN
START
4
C215
A1 12RD
COMBINATION BUZZER
FUSED IGNITION SWITCH OUTPUT (RUN/START)
1
A21 14DB
A21 14DB
C201
9
15A
5
10A
FUSE BLOCK
C202
C201
G5 18DB/WT
G5 18DB WT
G50 18WT/YL
G5 18DB/WT

J958W-5

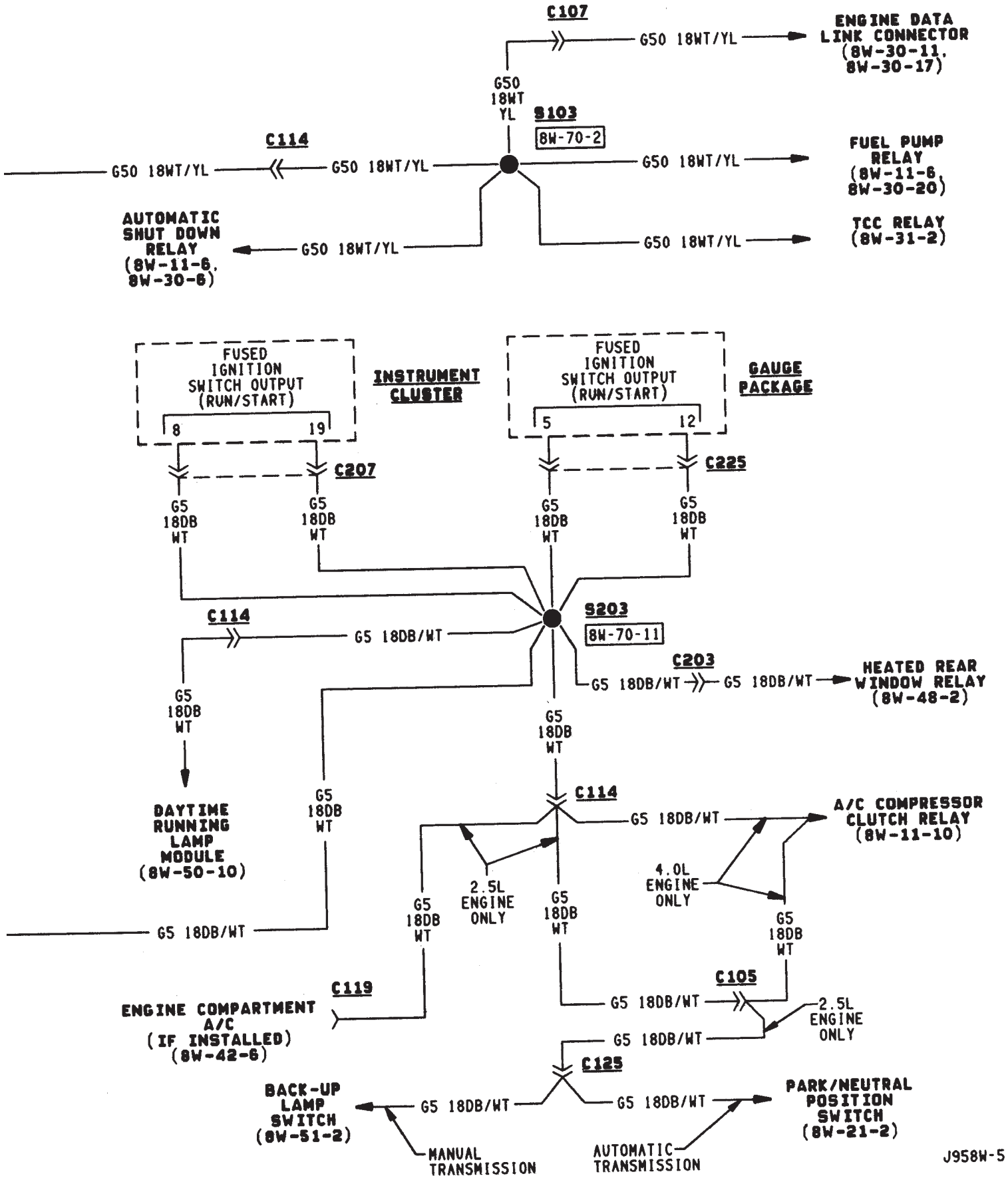
C107
G50 18WT/YL
ENGINE DATA LINK CONNECTOR (8W-30-11, 8W-30-17)
G50 18WT YL
S103
8W-70-2
C114
G50 18WT/YL
G50 18WT/YL
G50 18WT/YL
FUEL PUMP RELAY (8W-11-6, 8W-30-20)
AUTOMATIC SHUT DOWN RELAY (8W-11-6, 8W-30-6)
G50 18WT/YL
G50 18WT/YL
TCC RELAY (8W-31-2)
FUSED IGNITION SWITCH OUTPUT (RUN/START)
8
19
INSTRUMENT CLUSTER
FUSED IGNITION SWITCH OUTPUT (RUN/START)
5
12
GAUGE PACKAGE
C207
C225
G5 18DB WT
G5 18DB WT
G5 18DB WT
G5 18DB WT
C114
G5 18DB/WT
S203
8W-70-11
C203
G5 18DB/WT
G5 18DB/WT
HEATED REAR WINDOW RELAY (8W-48-2)
G5 18DB WT
G5 18DB WT
DAYTIME RUNNING LAMP MODULE (8W-50-10)
G5 18DB WT
C114
G5 18DB/WT
A/C COMPRESSOR CLUTCH RELAY (8W-11-10)
G5 18DB/WT
G5 18DB WT
2.5L ENGINE ONLY
G5 18DB WT
4.0L ENGINE ONLY
G5 18DB WT
C105
C119
ENGINE COMPARTMENT A/C (IF INSTALLED) (8W-42-6)
G5 18DB/WT
G5 18DB/WT
2.5L ENGINE ONLY
G5 18DB/WT
C125
BACK-UP LAMP SWITCH (8W-51-2)
G5 18DB/WT
G5 18DB/WT
PARK/NEUTRAL POSITION SWITCH (8W-21-2)
MANUAL TRANSMISSION
AUTOMATIC TRANSMISSION
J958W-5

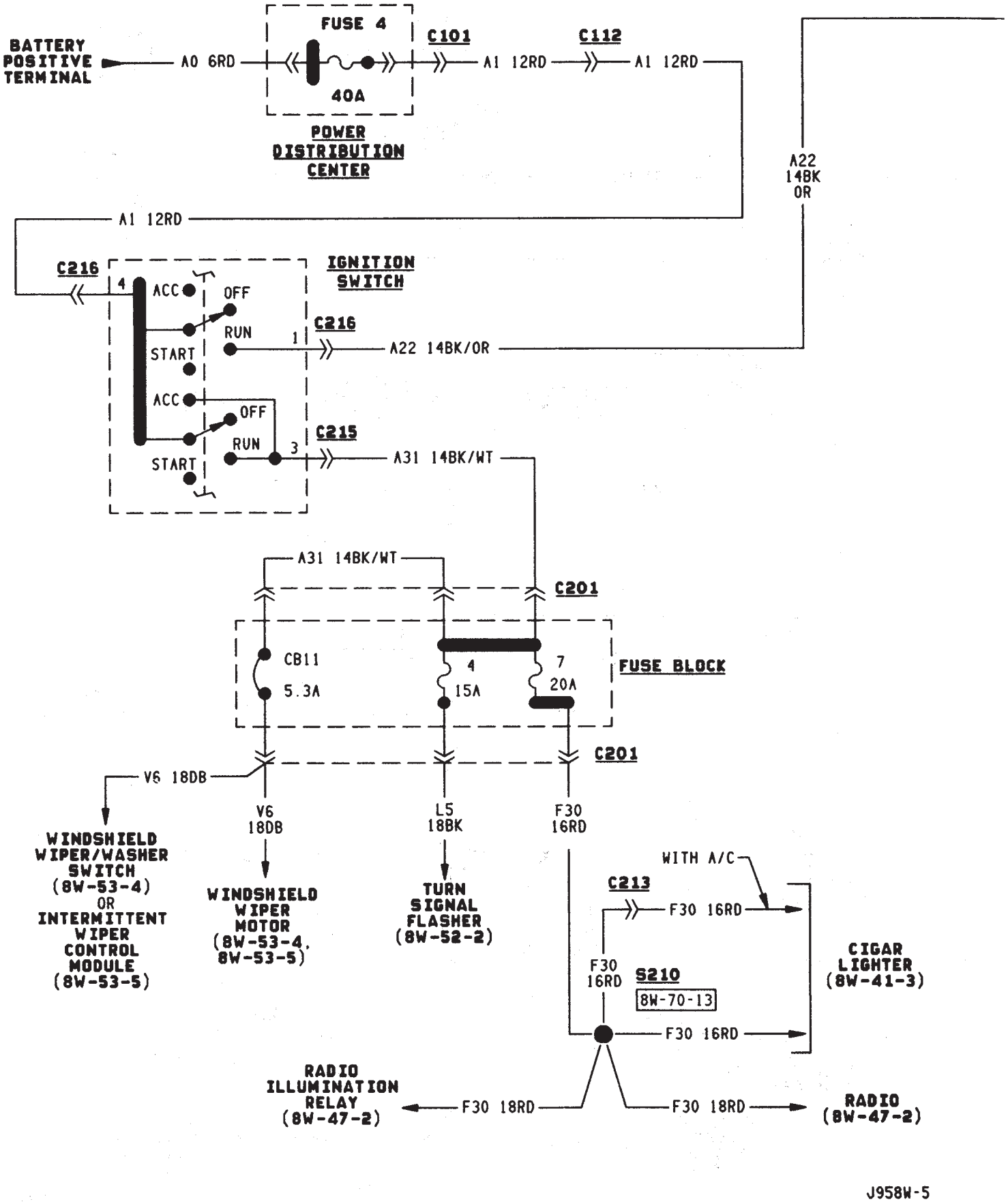
BATTERY POSITIVE TERMINAL
A0 6RD
FUSE 4
40A
C101
A1 12RD
C112
A1 12RD
POWER DISTRIBUTION CENTER
A22 14BK OR
A1 12RD
C216
IGNITION SWITCH
4
ACC
OFF
RUN
START
ACC
OFF
RUN
START
C216
1
A22 14BK/OR
C215
3
A31 14BK/WT
A31 14BK/WT
C201
CB11
5.3A
4
15A
7
20A
FUSE BLOCK
C201
V6 18DB
V6 18DB
L5 18BK
F30 16RD
WINDSHIELD WIPER/WASHER SWITCH (8W-53-4) OR INTERMITTENT WIPER CONTROL MODULE (8W-53-5)
WINDSHIELD WIPER MOTOR (8W-53-4, 8W-53-5)
TURN SIGNAL FLASHER (8W-52-2)
WITH A/C
C213
F30 16RD
F30 16RD
S210
8W-70-13
F30 16RD
CIGAR LIGHTER (8W-41-3)
RADIO ILLUMINATION RELAY (8W-47-2)
F30 18RD
F30 18RD
RADIO (8W-47-2)

J958W-5

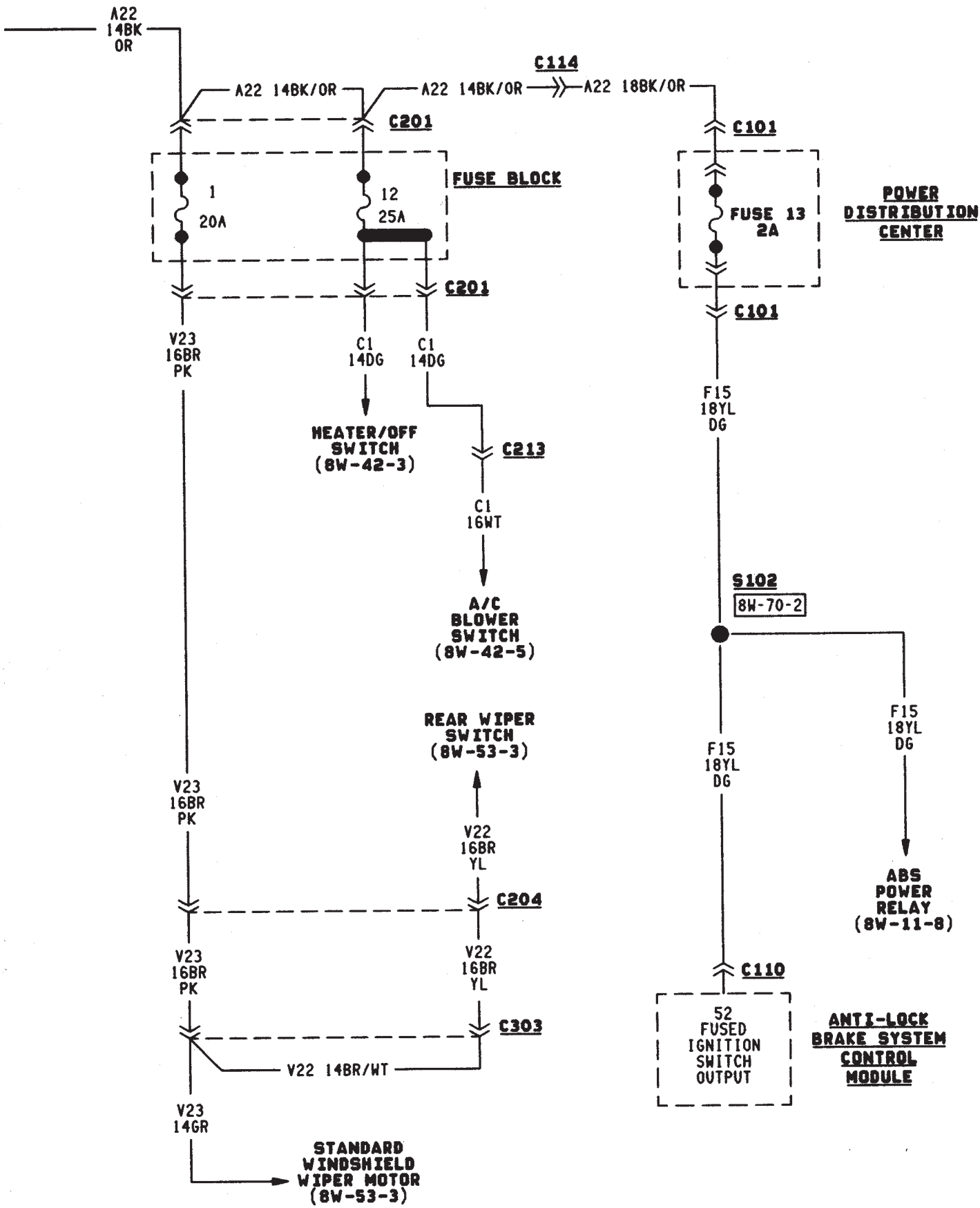
A22
14BK
OR
C114
A22 14BK/OR
A22 14BK/OR
A22 18BK/OR
C201
C101
FUSE BLOCK
1
20A
12
25A
FUSE 13
2A
POWER
DISTRIBUTION
CENTER
C201
C101
V23
16BR
PK
C1
14DG
C1
14DG
F15
18YL
DG
HEATER/OFF
SWITCH
(8W-42-3)
C213
C1
16WT
A/C
BLOWER
SWITCH
(8W-42-5)
S102
8W-70-2
REAR WIPER
SWITCH
(8W-53-3)
V23
16BR
PK
V22
16BR
YL
F15
18YL
DG
F15
18YL
DG
C204
ABS
POWER
RELAY
(8W-11-8)
V23
16BR
PK
V22
16BR
YL
C110
C303
52
FUSED
IGNITION
SWITCH
OUTPUT
ANTI-LOCK
BRAKE SYSTEM
CONTROL
MODULE
V22 14BR/WT
V23
14GR
STANDARD
WINDSHIELD
WIPER MOTOR
(8W-53-3)

J958W-5

POWER DISTRIBUTION

GENERAL INFORMATION

This section covers the Power Distribution Center (PDC) and all circuits involved with it. For additional information on system operation refer to the appropriate section of the wiring diagrams.

DIAGRAM INDEX

Component	Page
A/C Compressor Clutch Relay	8W-11-3, 10
ABS Pump Motor Relay	8W-11-3, 9
ABS Control Module	8W-11-8, 9
ABS Power Relay	8W-11-3, 8
Automatic Shut Down Relay	8W-11-3, 6
Engine Starter Motor Relay	8W-11-3, 4
Fuel Pump Relay	8W-11-3, 6
Fuse 1 (Fuse Block)	8W-11-8
Fuse 1 (PDC)	8W-11-6
Fuse 2 (PDC)	8W-11-7
Fuse 3 (PDC)	8W-11-7
Fuse 4 (PDC)	8W-11-4, 8, 10
Fuse 5 (Fuse Block)	8W-11-6
Fuse 5 (PDC)	8W-11-7
Fuse 6 (PDC)	8W-11-7
Fuse 7 (PDC)	8W-11-7
Fuse 8 (PDC)	8W-11-5
Fuse 9 (Fuse Block)	8W-11-10
Fuse 9 (PDC)	8W-11-9
Fuse 10 (PDC)	8W-11-8
Fuse 11 (PDC)	8W-11-5
Fuse 12 (Fuse Block)	8W-11-8
Fuse 12 (PDC)	8W-11-5
Headlamp Switch	8W-11-7
Horn Relay	8W-11-3, 5
Ignition Switch	8W-11-4, 8, 10
Power Distribution Center	8W-11-2
Powertrain Control Module	8W-11-4, 6, 10

POWER DISTRIBUTION CENTER
C101

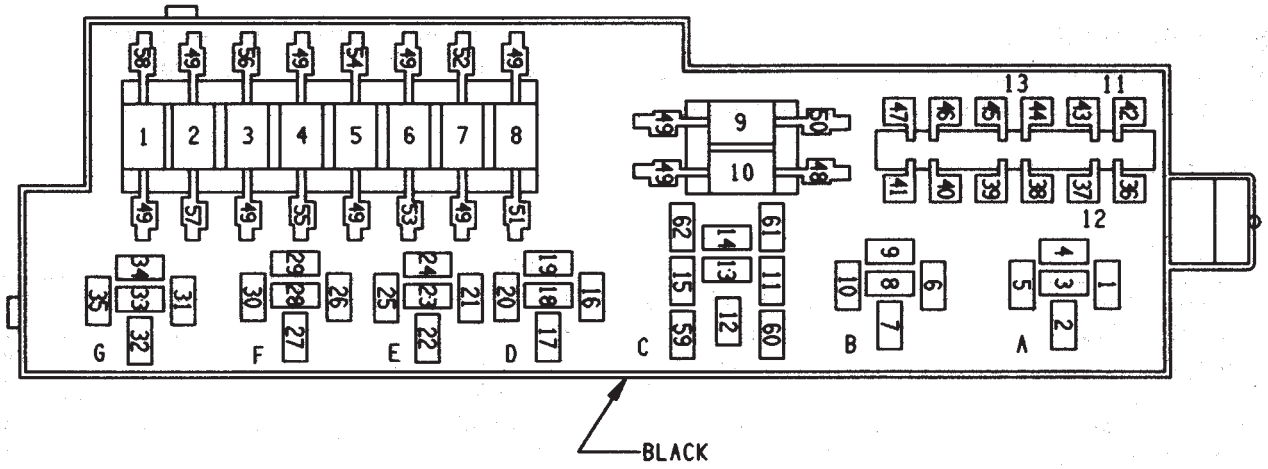

	FUSE	FUSED CIRCUIT	FEED CIRCUIT	AMPS	SECTION/PAGE	
(2)	1	A14 16RD/WT	A0 6RD	30	8W-11-6	
	2	A11 10RD		50	8W-11-7	
	3	A6 12RD/BK		50	8W-11-7	
(2)	4	A1 12RD		40	8W-11-4 8W-11-8 8W-11-10	
	5	L9 18BK/WT		20	8W-11-7	
	6	A11 10RD		50	8W-11-7	
	7	A3 12RD/OR		30	8W-11-7	
	8	A4 18BK/RD		20	8W-11-5	
	9	A10 12RD/BR		40	8W-11-9	4.0L ENGINE ONLY
	10	A20 14RD/DB		30	8W-11-8	4.0L ENGINE ONLY
	11	F31 18VT	A4 18BK/RD	10	8W-11-5	
	12	M1 18PK		10	8W-11-5	
	13	F15 18YL/DG	A22 18BK/OR	2	8W-11-8	

(2) INDICATES 2 WIRES IN CAVITY

A
HORN
RELAY

CAV	CIRCUIT	FUNCTION	SECTION/PAGE
1	X3 18BK/RD	HORN RELAY CONTROL	8W-11-5
2	F31 18VT	FUSED B(+)	8W-11-5
4	X2 18DG/RD	HORN RELAY OUTPUT	8W-11-5
5	F31 18VT	FUSED B(+)	8W-11-5
5	F31 18VT	FUSED B(+)	8W-11-5

B
FUEL
PUMP
RELAY

CAV	CIRCUIT	FUNCTION	SECTION/PAGE
6	G50 18WT/YL	FUSED IGN SW OUTPUT	8W-11-6
7	A14 16RD/WT	FUSED B(+)	8W-11-6
7	A14 16RD/WT	FUSED B(+)	8W-11-6
9	A141 16DG/BK	FUEL PUMP RELAY OUTPUT	8W-11-6
10	K51 18DB/YL	FUEL PUMP RELAY CONTROL	8W-11-6
10	K51 18DB/YL	FUEL PUMP RELAY CONTROL	8W-11-6

C
ABS PUMP
MOTOR
RELAY
(4.0L ENGINE
ONLY)

CAV	CIRCUIT	FUNCTION	SECTION/PAGE
11	B15 14GY/YL	ABS MAIN RELAY OUTPUT	8W-11-9
12	A10 12RD/BR	FUSED B(+)	8W-11-9
14	B25 12TN	ABS PUMP MOTOR RELAY OUTPUT	8W-11-9
15	B116 18GY	ABS PUMP MOTOR RELAY CONTROL	8W-11-9
60	Z12 14BK/TN	GROUND	8W-11-9

D
A/C COMPRESSOR
CLUTCH RELAY
4.0L ENGINE
ONLY)

CAV	CIRCUIT	FUNCTION	SECTION/PAGE
16	C13 18DB/OR	A/C COMPRESSOR CLUTCH RELAY CONTROL	8W-11-10
17	C3 18DB/BK	A/C COMPRESSOR CLUTCH OUTPUT	8W-11-10
18	Z1 16BK	GROUND	8W-11-10
19	C20 18BR/RD(2)	A/C SWITCH SENSE	8W-11-10
20	G5 18DB/WT(2)	FUSED IGN SW OUTPUT(RUN/START)	8W-11-10

E
AUTOMATIC
SHUT DOWN
RELAY

CAV	CIRCUIT	FUNCTION	SECTION/PAGE
21	G50 18WT/YL	FUSED IGNITION SWITCH OUTPUT	8W-11-6
22	A14 16RD/WT(2)	FUSED B(+)	8W-11-6
24	A142 18DG/OR	AUTOMATIC SHUT DOWN RELAY OUTPUT	8W-11-6
25	K51 18DB/YL	AUTOMATIC SHUT DOWN RELAY CONTROL	8W-11-6

F
ENGINE
STARTER
MOTOR
RELAY

CAV	CIRCUIT	FUNCTION	SECTION/PAGE
26	A41 18YL	IGNITION SWITCH OUTPUT (START)	8W-11-4
27	A1 12RD	FUSED B(+)	8W-11-4
29	T40 14BR	ENGINE STARTER RELAY OUTPUT	8W-11-4
30	T41 18BR/YL(2)	PARK/NEUTRAL POSITION SW SENSE	8W-11-4

G
ABS
POWER
RELAY
(4.0L ENGINE
ONLY)

CAV	CIRCUIT	FUNCTION	SECTION/PAGE
31	F15 18YL/DG	FUSED IGNITION SWITCH OUTPUT	8W-11-8
32	B15 14GY/YL(2)	ABS MAIN RELAY OUTPUT	8W-11-8
33	Z12 18BK/TN	GROUND	8W-11-8
34	A20 14RD/DB	FUSED B(+)	8W-11-8
35	B20 18PK	ABS MAIN RELAY CONTROL	8W-11-8

(2) INDICATES 2 WIRES IN CAVITY

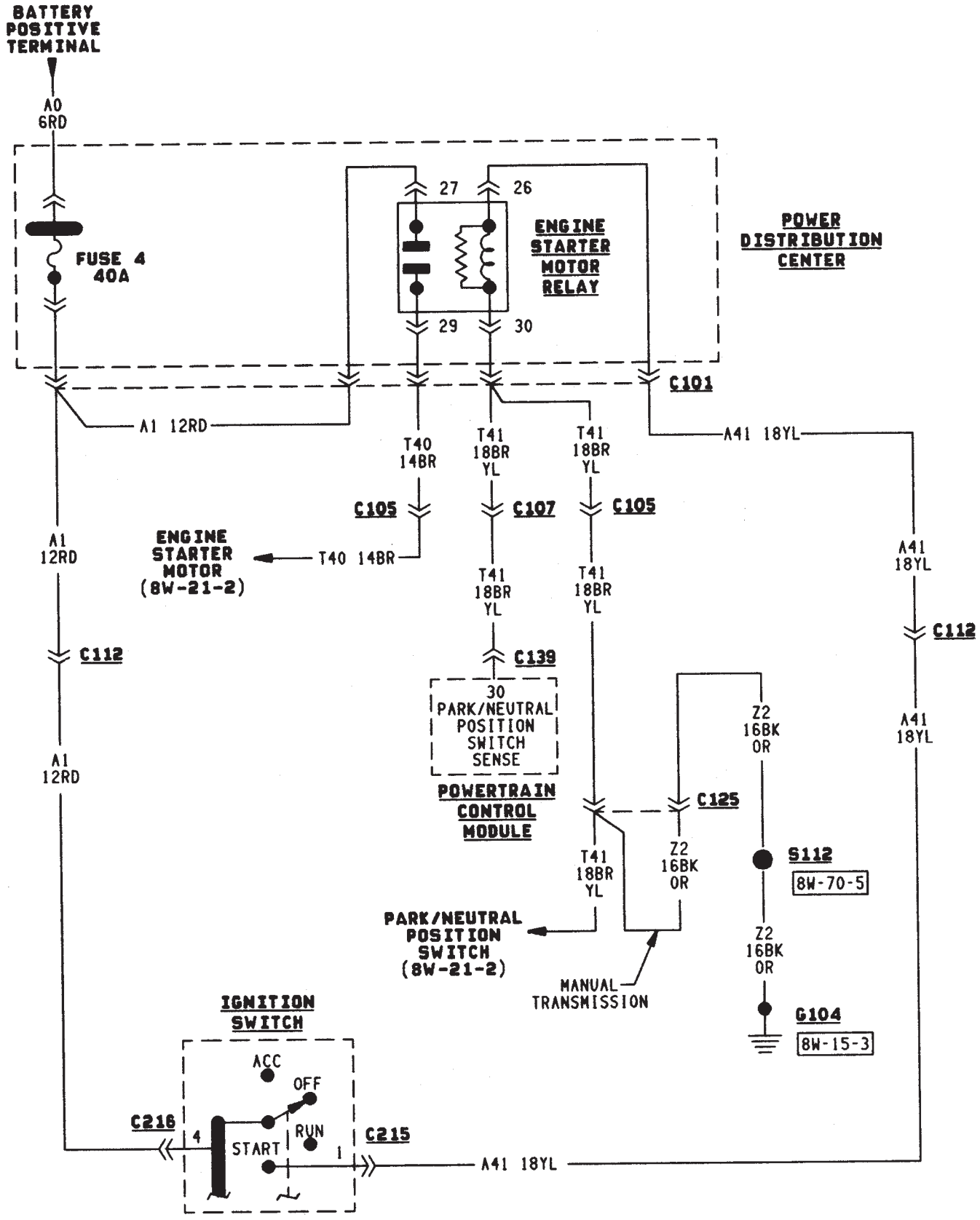
BATTERY POSITIVE TERMINAL
A0 6RD
FUSE 4 40A
27
26
29
30
ENGINE STARTER MOTOR RELAY
POWER DISTRIBUTION CENTER
C101
A1 12RD
T40 14BR
T41 18BR YL
T41 18BR YL
A41 18YL
C105
C107
C105
A1 12RD
ENGINE STARTER MOTOR (8W-21-2)
T40 14BR
T41 18BR YL
T41 18BR YL
A41 18YL
C112
C139
C112
30 PARK/NEUTRAL POSITION SWITCH SENSE
POWERTRAIN CONTROL MODULE
A1 12RD
C125
Z2 16BK OR
A41 18YL
T41 18BR YL
Z2 16BK OR
S112
8W-70-5
PARK/NEUTRAL POSITION SWITCH (8W-21-2)
Z2 16BK OR
MANUAL TRANSMISSION
G104
8W-15-3
IGNITION SWITCH
ACC
OFF
RUN
START
C216
4
1
C215
A41 18YL

J958W-5

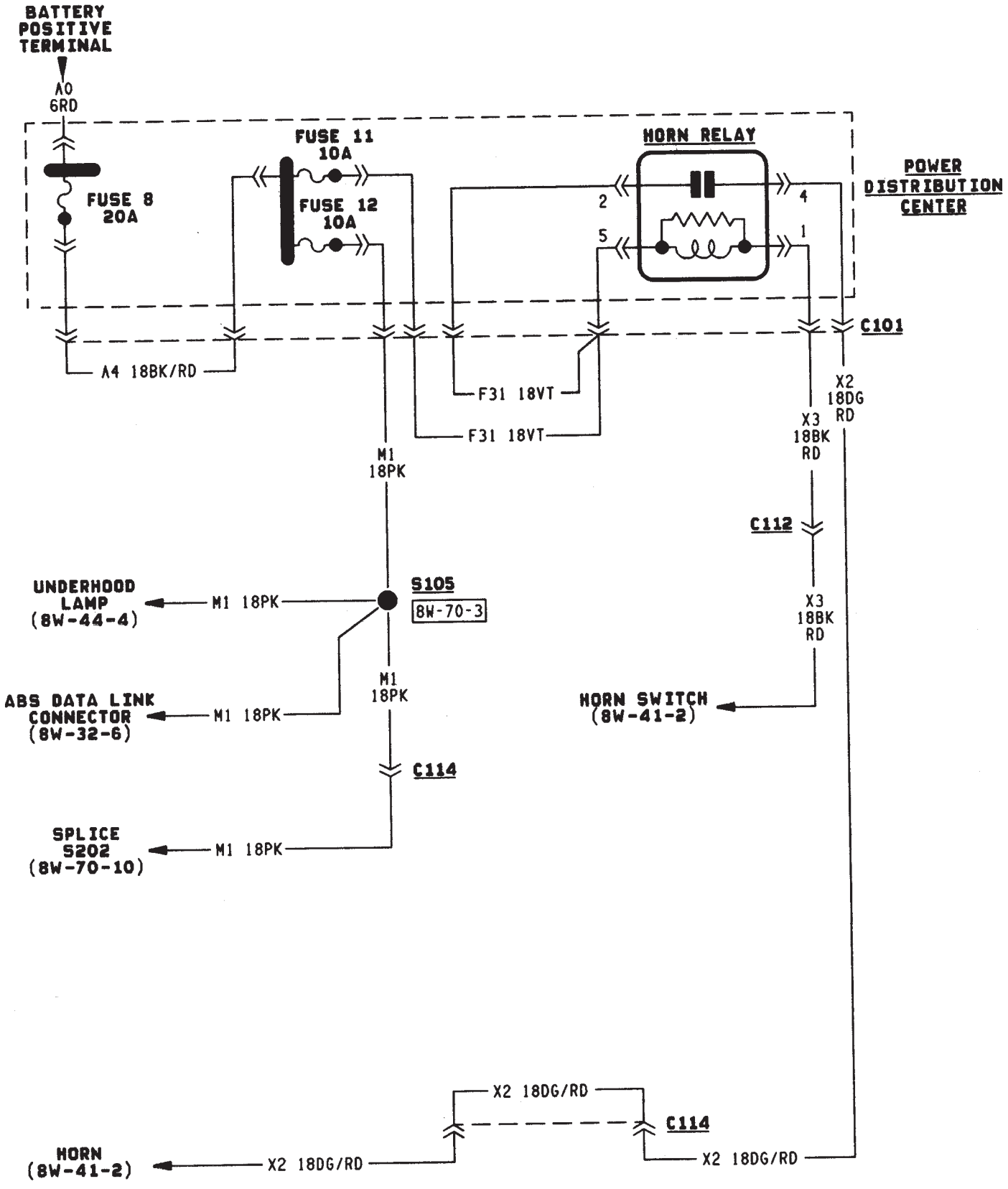
BATTERY POSITIVE TERMINAL
A0 6RD
FUSE 8 20A
FUSE 11 10A
FUSE 12 10A
HORN RELAY
2
4
5
1
POWER DISTRIBUTION CENTER
C101
A4 18BK/RD
F31 18VT
F31 18VT
X2 18DG RD
X3 18BK RD
M1 18PK
C112
UNDERHOOD LAMP (8W-44-4)
M1 18PK
S105
8W-70-3
X3 18BK RD
ABS DATA LINK CONNECTOR (8W-32-6)
M1 18PK
M1 18PK
HORN SWITCH (8W-41-2)
C114
SPLICE S202 (8W-70-10)
M1 18PK
X2 18DG/RD
C114
HORN (8W-41-2)
X2 18DG/RD
X2 18DG/RD

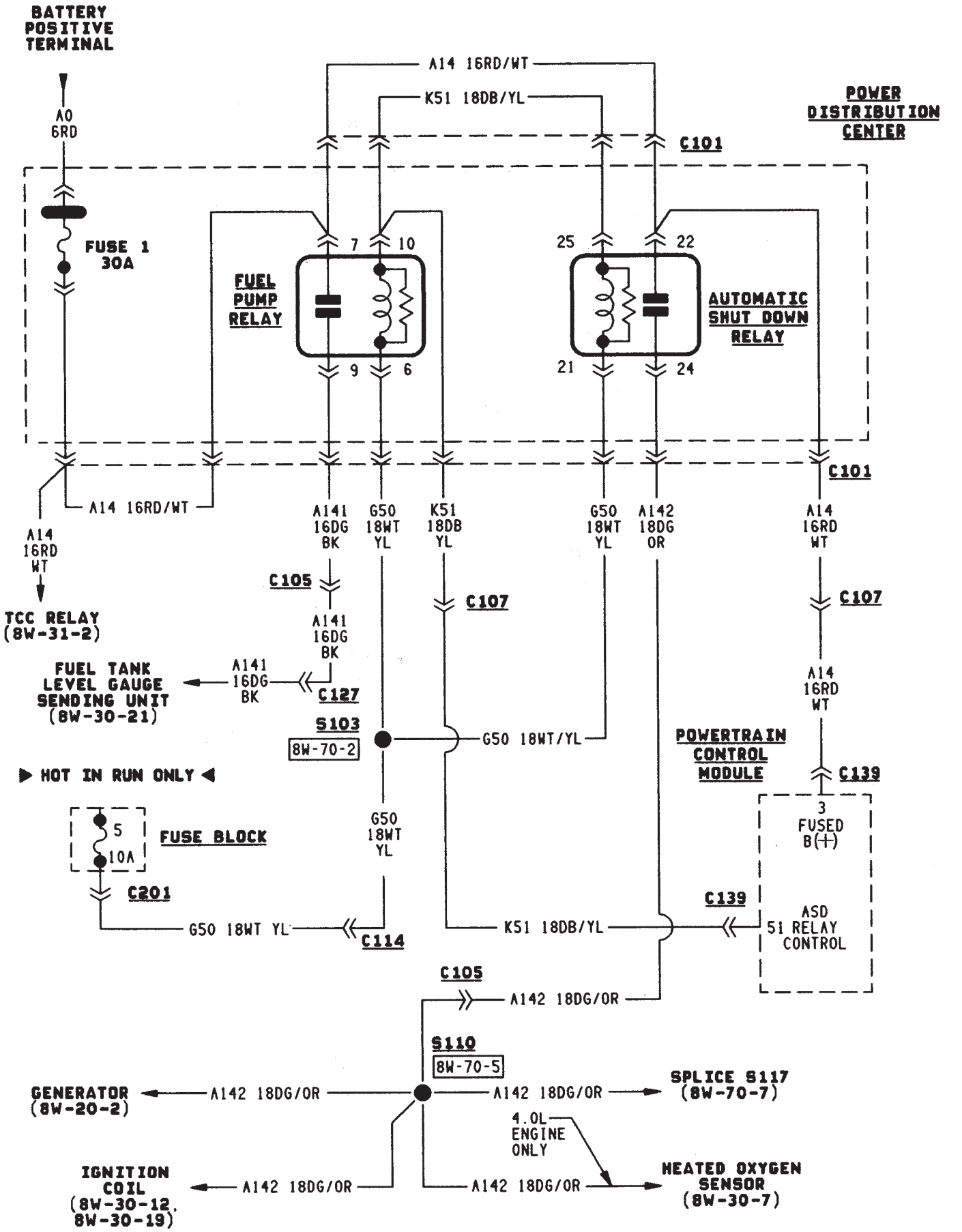
BATTERY POSITIVE TERMINAL
A0 6RD
A14 16RD/WT
K51 18DB/YL
POWER DISTRIBUTION CENTER
C101
FUSE 1 30A
FUEL PUMP RELAY
AUTOMATIC SHUT DOWN RELAY
7
10
25
22
9
6
21
24
A14 16RD/WT
A141 16DG BK
G50 18WT YL
K51 18DB YL
G50 18WT YL
A142 18DG OR
A14 16RD WT
C105
C107
TCC RELAY (8W-31-2)
FUEL TANK LEVEL GAUGE SENDING UNIT (8W-30-21)
C127
S103
8W-70-2
G50 18WT/YL
POWERTRAIN CONTROL MODULE
C139
▶ HOT IN RUN ONLY ◀
5
10A
FUSE BLOCK
C201
3 FUSED B(+)
ASD 51 RELAY CONTROL
K51 18DB/YL
C114
A142 18DG/OR
S110
8W-70-5
GENERATOR (8W-20-2)
SPLICE S117 (8W-70-7)
4.0L ENGINE ONLY
IGNITION COIL (8W-30-12, 8W-30-19)
HEATED OXYGEN SENSOR (8W-30-7)

J958W-5

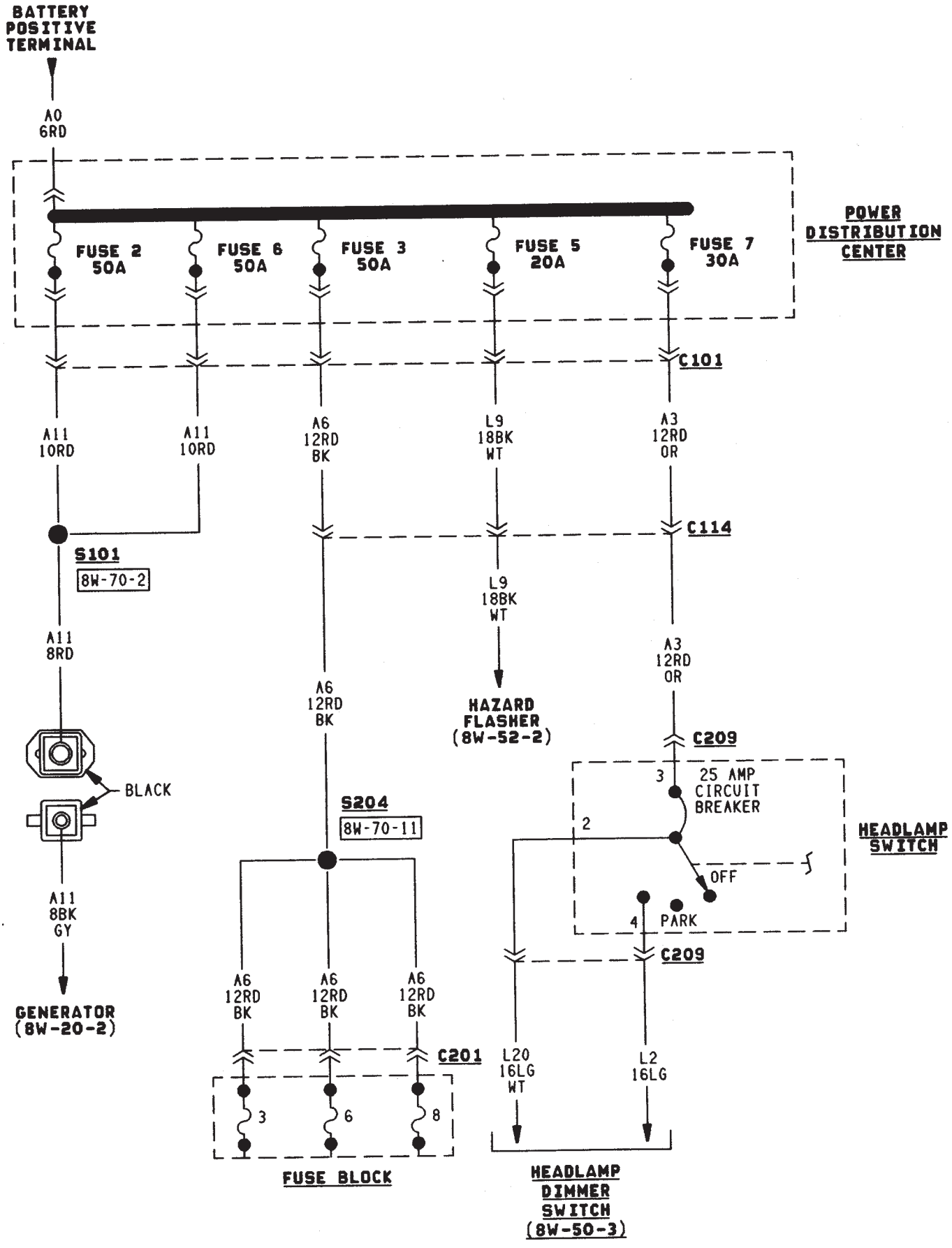
BATTERY POSITIVE TERMINAL
A0 6RD
POWER DISTRIBUTION CENTER
FUSE 2 50A
FUSE 6 50A
FUSE 3 50A
FUSE 5 20A
FUSE 7 30A
C101
A11 10RD
A11 10RD
A6 12RD BK
L9 18BK WT
A3 12RD OR
C114
S101
8W-70-2
L9 18BK WT
A3 12RD OR
A11 8RD
A6 12RD BK
HAZARD FLASHER (8W-52-2)
C209
3
25 AMP CIRCUIT BREAKER
2
HEADLAMP SWITCH
OFF
4
PARK
BLACK
S204
8W-70-11
C209
A11 8BK GY
A6 12RD BK
A6 12RD BK
A6 12RD BK
C201
L20 16LG WT
L2 16LG
3
6
8
GENERATOR (8W-20-2)
FUSE BLOCK
HEADLAMP DIMMER SWITCH (8W-50-3)

J958W-5

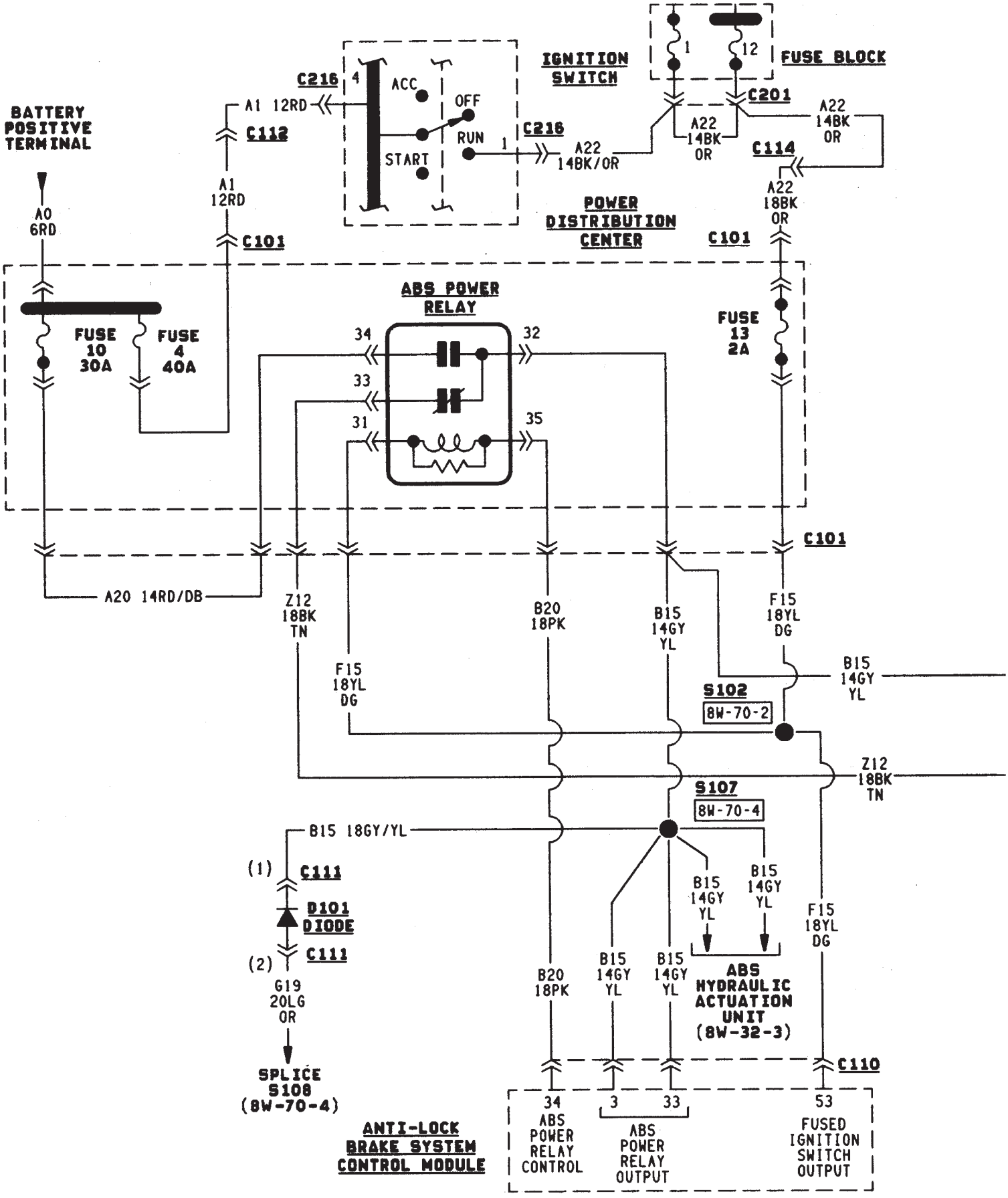
BATTERY POSITIVE TERMINAL
A0 6RD
A1 12RD
C112
C216
4
ACC
OFF
RUN
START
1
C216
A1 12RD
IGNITION SWITCH
1
12
FUSE BLOCK
C201
A22 14BK OR
A22 14BK OR
C114
A22 14BK/OR
A22 18BK OR
POWER DISTRIBUTION CENTER
C101
C101
ABS POWER RELAY
34
32
33
31
35
FUSE 10 30A
FUSE 4 40A
FUSE 13 2A
C101
A20 14RD/DB
Z12 18BK TN
F15 18YL DG
B20 18PK
B15 14GY YL
F15 18YL DG
B15 14GY YL
S102
8W-70-2
Z12 18BK TN
S107
8W-70-4
B15 18GY/YL
(1)
C111
D101 DIODE
(2)
C111
G19 20LG OR
SPLICE S108 (8W-70-4)
B15 14GY YL
B15 14GY YL
F15 18YL DG
B20 18PK
B15 14GY YL
B15 14GY YL
ABS HYDRAULIC ACTUATION UNIT (8W-32-3)
C110
34
3
33
53
ABS POWER RELAY CONTROL
ABS POWER RELAY OUTPUT
FUSED IGNITION SWITCH OUTPUT
ANTI-LOCK BRAKE SYSTEM CONTROL MODULE

J958W-5

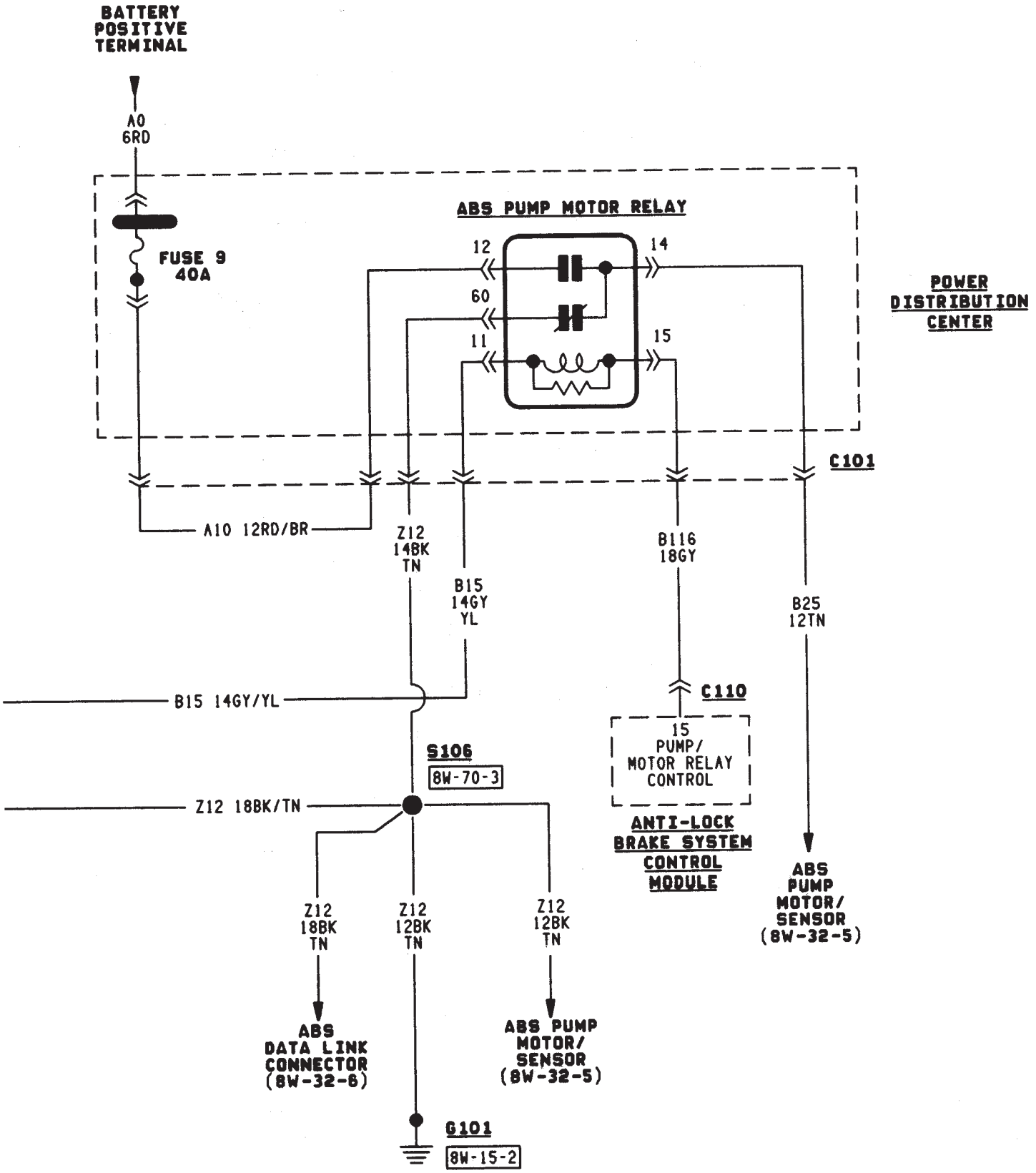
BATTERY POSITIVE TERMINAL
A0 6RD
FUSE 9 40A
ABS PUMP MOTOR RELAY
12
14
60
11
15
POWER DISTRIBUTION CENTER
C101
A10 12RD/BR
Z12 14BK TN
B15 14GY YL
B116 18GY
B25 12TN
B15 14GY/YL
C110
15 PUMP/ MOTOR RELAY CONTROL
S106
8W-70-3
Z12 18BK/TN
ANTI-LOCK BRAKE SYSTEM CONTROL MODULE
ABS PUMP MOTOR/ SENSOR (8W-32-5)
Z12 18BK TN
Z12 12BK TN
Z12 12BK TN
ABS DATA LINK CONNECTOR (8W-32-6)
ABS PUMP MOTOR/ SENSOR (8W-32-5)
G101
8W-15-2

J958W-5

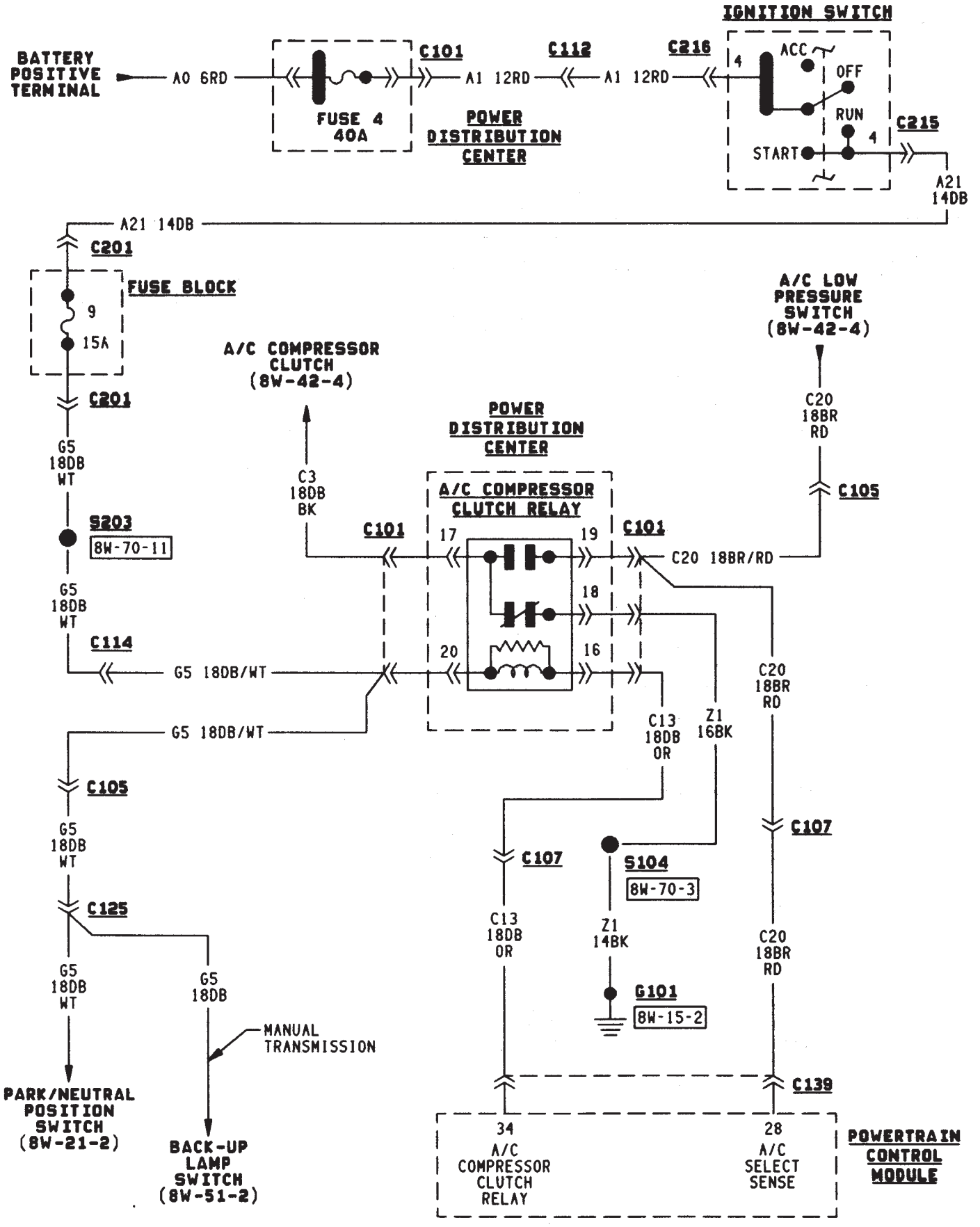
IGNITION SWITCH
BATTERY POSITIVE TERMINAL
A0 6RD
C101
FUSE 4 40A
POWER DISTRIBUTION CENTER
C112
A1 12RD
C216
A1 12RD
4
ACC
OFF
RUN
START
4
C215
A21 14DB
A21 14DB
C201
FUSE BLOCK
9
15A
C201
G5 18DB WT
S203
8W-70-11
G5 18DB WT
C114
G5 18DB/WT
A/C COMPRESSOR CLUTCH (8W-42-4)
C3 18DB BK
POWER DISTRIBUTION CENTER
A/C COMPRESSOR CLUTCH RELAY
C101
17
19
18
20
16
C101
A/C LOW PRESSURE SWITCH (8W-42-4)
C20 18BR RD
C105
C20 18BR/RD
C20 18BR RD
G5 18DB/WT
C13 18DB OR
Z1 16BK
C105
G5 18DB WT
C125
G5 18DB WT
G5 18DB
MANUAL TRANSMISSION
C107
C107
S104
8W-70-3
C13 18DB OR
Z1 14BK
G101
8W-15-2
C20 18BR RD
C139
34
A/C COMPRESSOR CLUTCH RELAY
28
A/C SELECT SENSE
POWERTRAIN CONTROL MODULE
PARK/NEUTRAL POSITION SWITCH (8W-21-2)
BACK-UP LAMP SWITCH (8W-51-2)

J958W-5

GROUND DISTRIBUTION

GENERAL INFORMATION

This section identifies the grounds, splices that connect to those grounds, and the components that connect those grounds. For additional information on system operation, refer to the appropriate section of the wiring diagrams. For an illustration of the physical location of each ground, refer to group 8W-90.

DIAGRAM INDEX

Component	Page	Component	Page
G101	8W-15-2	G108	8W-15-4
G102	8W-15-2	S104	8W-15-2
G103	8W-15-2	S106	8W-15-2
G104	8W-15-3	S112	8W-15-3
G105	8W-15-3	S119	8W-15-3
G106	8W-15-4	S122	8W-15-3
G107	8W-15-4	S125	8W-15-4

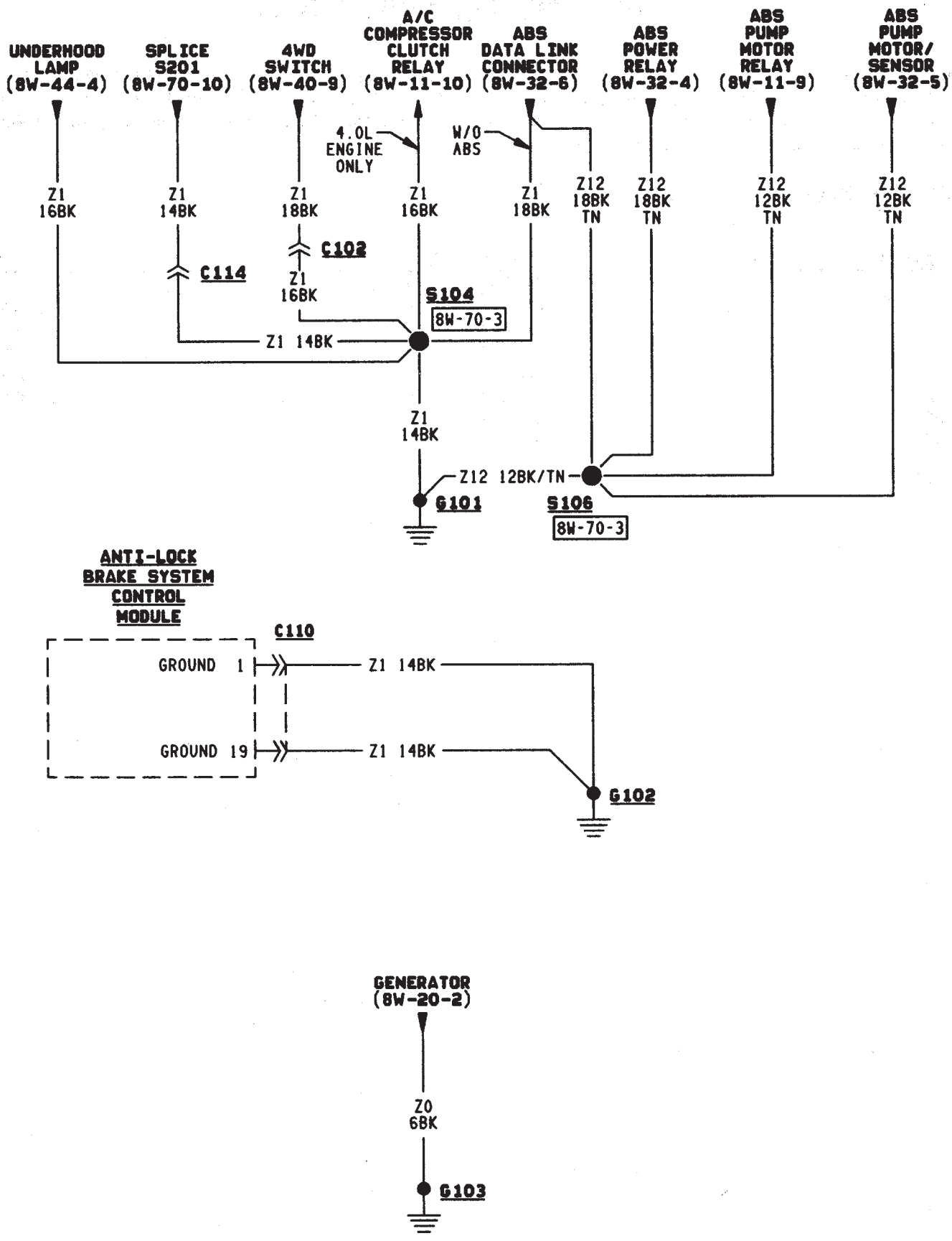
UNDERHOOD LAMP (8W-44-4)
SPLICE S201 (8W-70-10)
4WD SWITCH (8W-40-9)
A/C COMPRESSOR CLUTCH RELAY (8W-11-10)
ABS DATA LINK CONNECTOR (8W-32-6)
ABS POWER RELAY (8W-32-4)
ABS PUMP MOTOR RELAY (8W-11-9)
ABS PUMP MOTOR/ SENSOR (8W-32-5)
4.0L ENGINE ONLY
W/O ABS
Z1 16BK
Z1 14BK
Z1 18BK
Z1 16BK
Z1 18BK
Z12 18BK TN
Z12 18BK TN
Z12 12BK TN
Z12 12BK TN
C102
C114
Z1 16BK
S104
8W-70-3
Z1 14BK
Z1 14BK
Z12 12BK/TN
G101
S106
8W-70-3
ANTI-LOCK BRAKE SYSTEM CONTROL MODULE
C110
GROUND 1
Z1 14BK
GROUND 19
Z1 14BK
G102
GENERATOR (8W-20-2)
Z0 6BK
G103

J958W-5

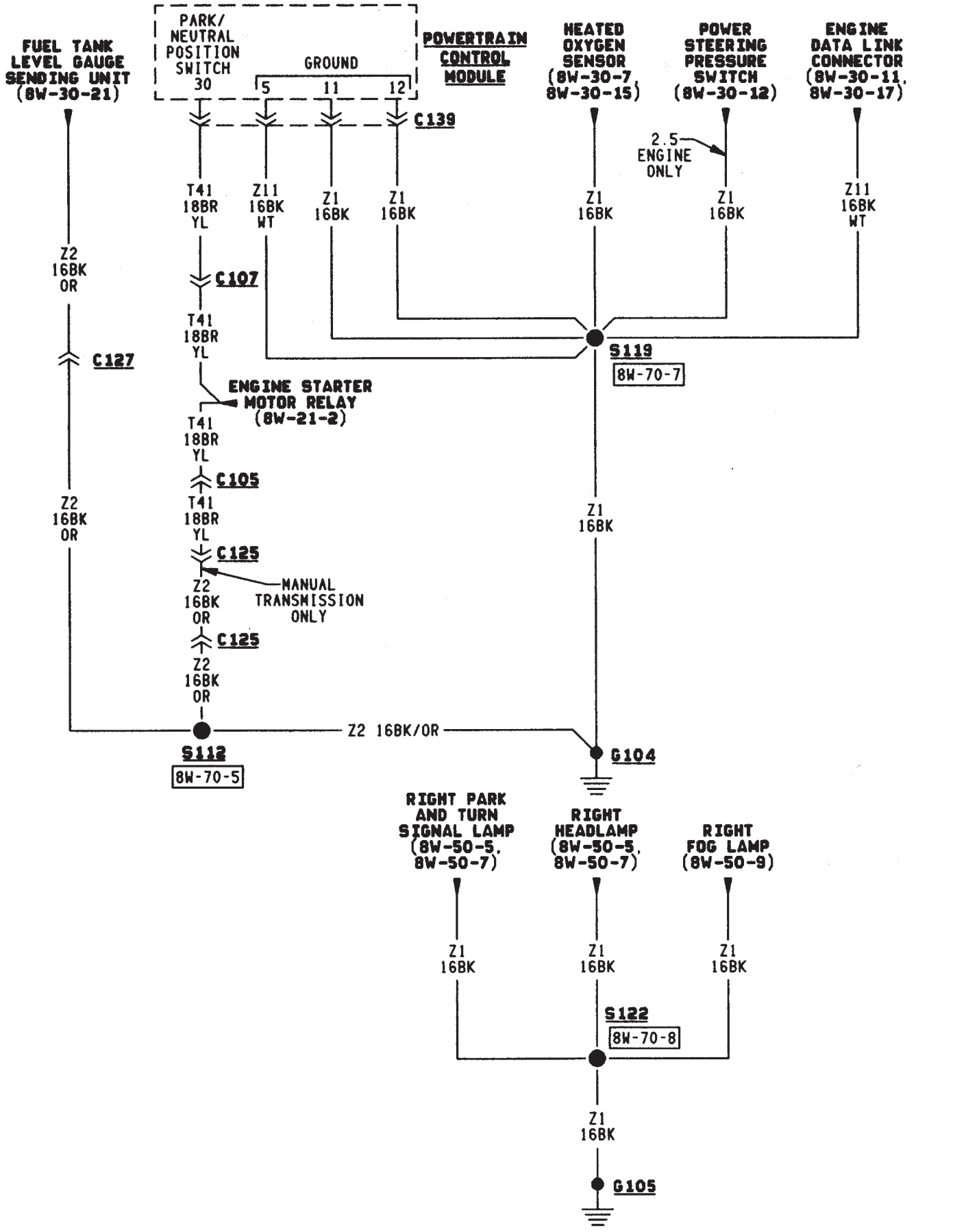
FUEL TANK LEVEL GAUGE SENDING UNIT (8W-30-21)
PARK/ NEUTRAL POSITION SWITCH
30
GROUND
5
11
12
POWERTRAIN CONTROL MODULE
C139
HEATED OXYGEN SENSOR (8W-30-7, 8W-30-15)
POWER STEERING PRESSURE SWITCH (8W-30-12)
ENGINE DATA LINK CONNECTOR (8W-30-11, 8W-30-17)
2.5 ENGINE ONLY
T41 18BR YL
Z11 16BK WT
Z1 16BK
Z1 16BK
Z1 16BK
Z1 16BK
Z11 16BK WT
Z2 16BK OR
C107
T41 18BR YL
C127
S119
8W-70-7
ENGINE STARTER MOTOR RELAY (8W-21-2)
T41 18BR YL
C105
T41 18BR YL
Z2 16BK OR
Z1 16BK
C125
Z2 16BK OR
MANUAL TRANSMISSION ONLY
C125
Z2 16BK OR
Z2 16BK/OR
S112
8W-70-5
G104
RIGHT PARK AND TURN SIGNAL LAMP (8W-50-5, 8W-50-7)
RIGHT HEADLAMP (8W-50-5, 8W-50-7)
RIGHT FOG LAMP (8W-50-9)
Z1 16BK
Z1 16BK
Z1 16BK
S122
8W-70-8
Z1 16BK
G105

J958W-5

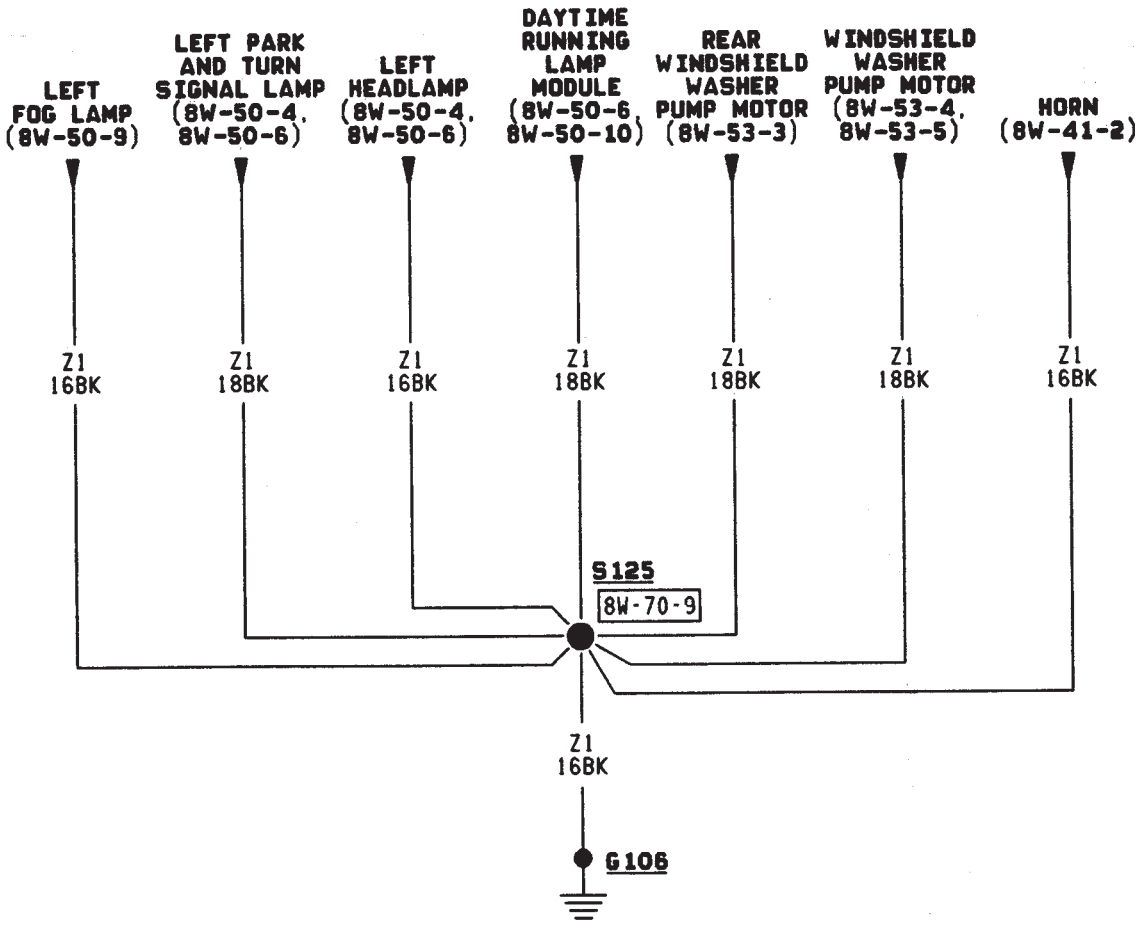
LEFT FOG LAMP (8W-50-9)
LEFT PARK AND TURN SIGNAL LAMP (8W-50-4, 8W-50-6)
LEFT HEADLAMP (8W-50-4, 8W-50-6)
DAYTIME RUNNING LAMP MODULE (8W-50-6, 8W-50-10)
REAR WINDSHIELD WASHER PUMP MOTOR (8W-53-3)
WINDSHIELD WASHER PUMP MOTOR (8W-53-4, 8W-53-5)
HORN (8W-41-2)
Z1 16BK
Z1 18BK
Z1 18BK
Z1 18BK
Z1 18BK
Z1 18BK
Z1 16BK
S125
8W-70-9
Z1 16BK
G106

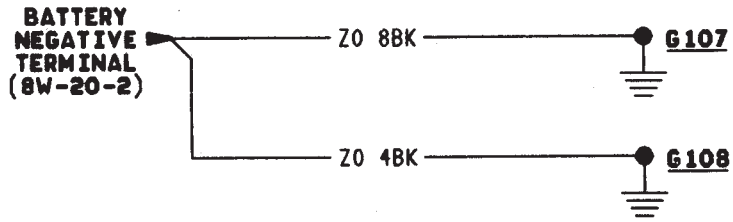
BATTERY NEGATIVE TERMINAL (8W-20-2)
Z0 8BK
G107
Z0 4BK
G108

CHARGING SYSTEM

CHARGING SYSTEM

The charging system is an integral part of the battery and starting systems. Because all these systems work in conjunction, diagnose and test them together.

Circuit A11 connects to the generator output terminal and splices to fuse 2 and fuse 6 in the Power Distribution Center (PDC). Circuit A0 connects the battery to the PDC.

Circuit Z0 provides ground for the generator. Circuit Z0 attaches to the right side rear of the engine.

When the ignition switch is in either the START or RUN position, it connects circuit A1 from fuse 4 in the PDC to circuit A21. Circuit A21 powers fuse 5 in the fuse block. Circuit G50 from fuse 5 splices to power the coil side of the Automatic Shut Down (ASD) relay. The Powertrain Control Module (PCM) provides ground for the relay on circuit K51. Circuit K51 connects to cavity 51 of the PCM.

When the PCM grounds the ASD relay, contacts inside the relay close and connect circuit A14 from fuse 1 in the PDC to circuit A142. Circuit A142 splices to the generator field terminal.

The PCM has an internal voltage regulator that controls generator output. The PCM controls the generator field on circuit K20. Circuit K20 connects to PCM cavity 20.

When the engine operates and there is current in the generator field, the generator produces a B+ voltage. The generator supplies B+ voltage to the battery through the A11 and A0 circuits.

HELPFUL INFORMATION

- The ignition switch also connects circuit A1 with circuits A41, A22, and A31.
- Circuit A21 also powers fuse 9 in the fuse block.
- Circuit G50 also powers the coil sides of the fuel pump relay and the torque convertor clutch (TCC) relay.
- The ASD relay supplies battery voltage for the fuel injectors, ignition coil, and the heated oxygen sensor.
- Circuit K51 also provides ground for the coil side of the fuel pump relay.

DIAGRAM INDEX

Component	Page
Battery	8W-20-2
Fuse 2 (PDC)	8W-20-2
Fuse 6 (PDC)	8W-20-2
Generator	8W-20-2
Powertrain Control Module (PCM)	8W-20-2

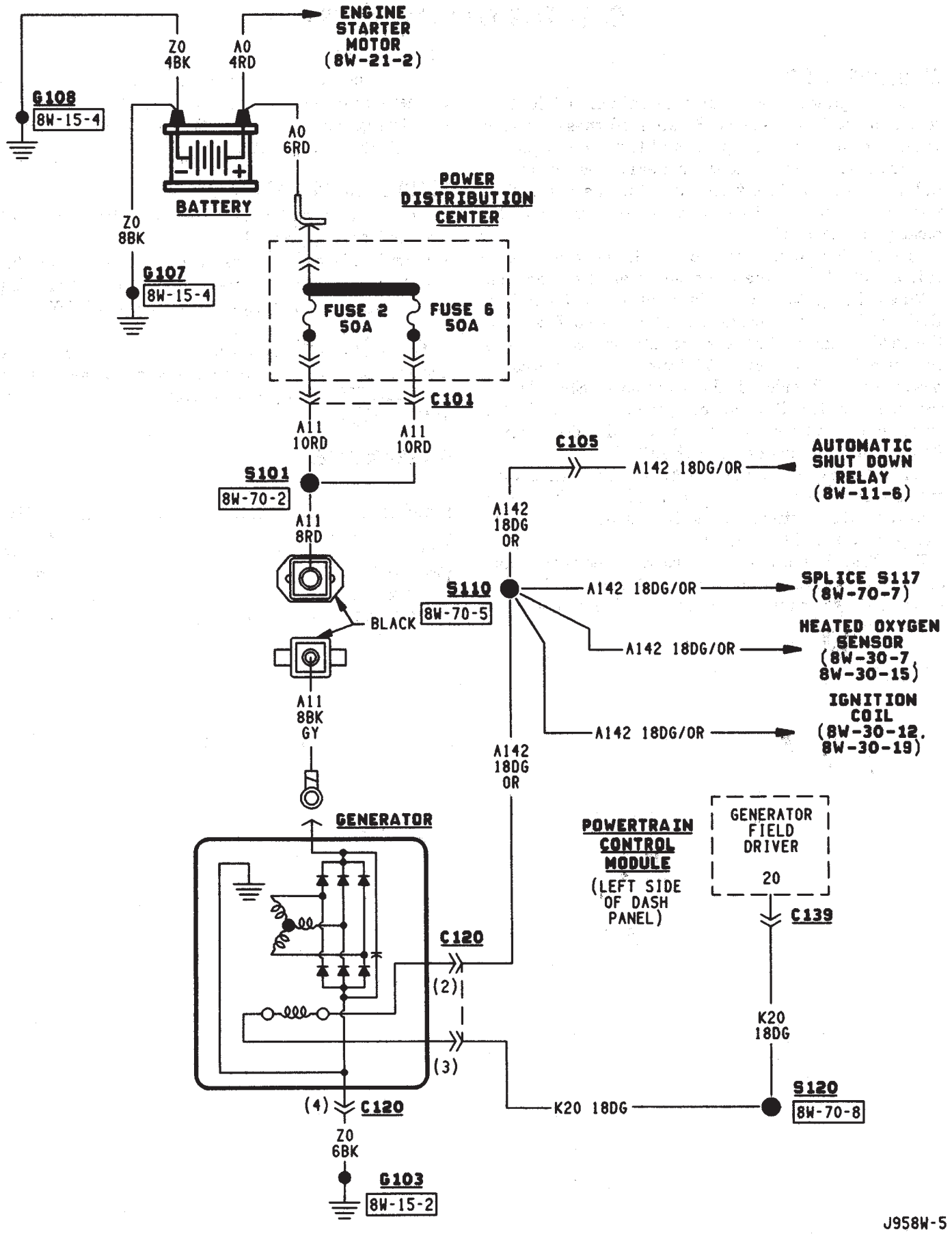
ENGINE STARTER MOTOR (8W-21-2)
Z0 4BK
A0 4RD
G108
8W-15-4
BATTERY
A0 6RD
POWER DISTRIBUTION CENTER
Z0 8BK
G107
8W-15-4
FUSE 2 50A
FUSE 6 50A
C101
A11 10RD
A11 10RD
S101
8W-70-2
A11 8RD
BLACK
A11 8BK GY
GENERATOR
C105
A142 18DG/OR
AUTOMATIC SHUT DOWN RELAY (8W-11-6)
A142 18DG OR
S110
8W-70-5
A142 18DG/OR
SPLICE S117 (8W-70-7)
A142 18DG/OR
HEATED OXYGEN SENSOR (8W-30-7, 8W-30-15)
A142 18DG/OR
IGNITION COIL (8W-30-12, 8W-30-19)
A142 18DG OR
POWERTRAIN CONTROL MODULE (LEFT SIDE OF DASH PANEL)
GENERATOR FIELD DRIVER
20
C139
K20 18DG
S120
8W-70-8
C120
(2)
(3)
(4)
C120
K20 18DG
Z0 6BK
G103
8W-15-2
J958W-5

STARTING SYSTEM

STARTING SYSTEM

AUTOMATIC TRANSMISSIONS

Circuit A0 from the battery is double crimped at the positive battery post. One branch of circuit A0 (battery positive cable) connects to the engine starter motor. The other A0 branch supplies voltage to the bus bar in the Power Distribution Center (PDC).

The PDC supplies battery voltage to the engine starter motor solenoid on circuit T40 when the coil side of the engine starter motor relay energizes. Circuit A1 from the fuse 4 in the PDC supplies battery voltage to the contact side of the starter motor relay.

The ignition switch supplies battery voltage to the coil side of the starter motor relay on circuit A41 when the key is moved to the START position and the Park/Neutral position switch is closed. Ground for the coil side of the starter motor relay is supplied by the case grounded Park/Neutral position switch. Circuit T41 connects the coil side of the relay to the Park/Neutral position switch.

When the starter motor relay energizes and the contacts close, circuit T40 supplies battery voltage to the starter motor solenoid. Circuit A0 from the battery supplies voltage to the starter motor when the solenoid energizes.

MANUAL TRANSMISSIONS

Circuit A0 from the battery is double crimped at the positive battery post. One branch of circuit A0 (battery positive cable) connects to the battery starter motor. The other A0 branch supplies voltage to the bus bar in the Power Distribution Center (PDC).

The PDC supplies battery voltage to the engine starter motor solenoid on circuit T40 when the coil side of the engine starter motor relay energizes. Circuit A1 from the fuse 4 in the PDC supplies battery voltage to the contact side of the starter motor relay.

The ignition switch supplies battery voltage to the coil side of the starter motor relay on circuit A41 when the key is moved to the START position. Circuit T41 from the coil side of the relay connects to a Z2 jumper wire in the back-up lamp switch. Circuit Z2 provides ground for the starter motor relay.

When the starter motor relay energizes and the contacts close, circuit T40 supplies battery voltage to the starter motor solenoid. Circuit A0 from the battery supplies voltage to the starter motor when the solenoid energizes.

HELPFUL INFORMATION

- The Park/Neutral switch closes when the transmission is in either the PARK or NEUTRAL positions.
- Circuit T41 also connects to cavity 30 of the Powertrain Control Module (PCM). This input tells the PCM the operator is starting the vehicle.

DIAGRAM INDEX

Component	Page
Engine Starter Motor	8W-21-2
Engine Starter Motor Relay	8W-21-2
Ignition Switch	8W-21-2
Park/Neutral Position Switch	8W-21-2
Power Distribution Center (PDC)	8W-21-2
Powertrain Control Module (PCM)	8W-21-2
Fuse 4 (PDC)	8W-21-2

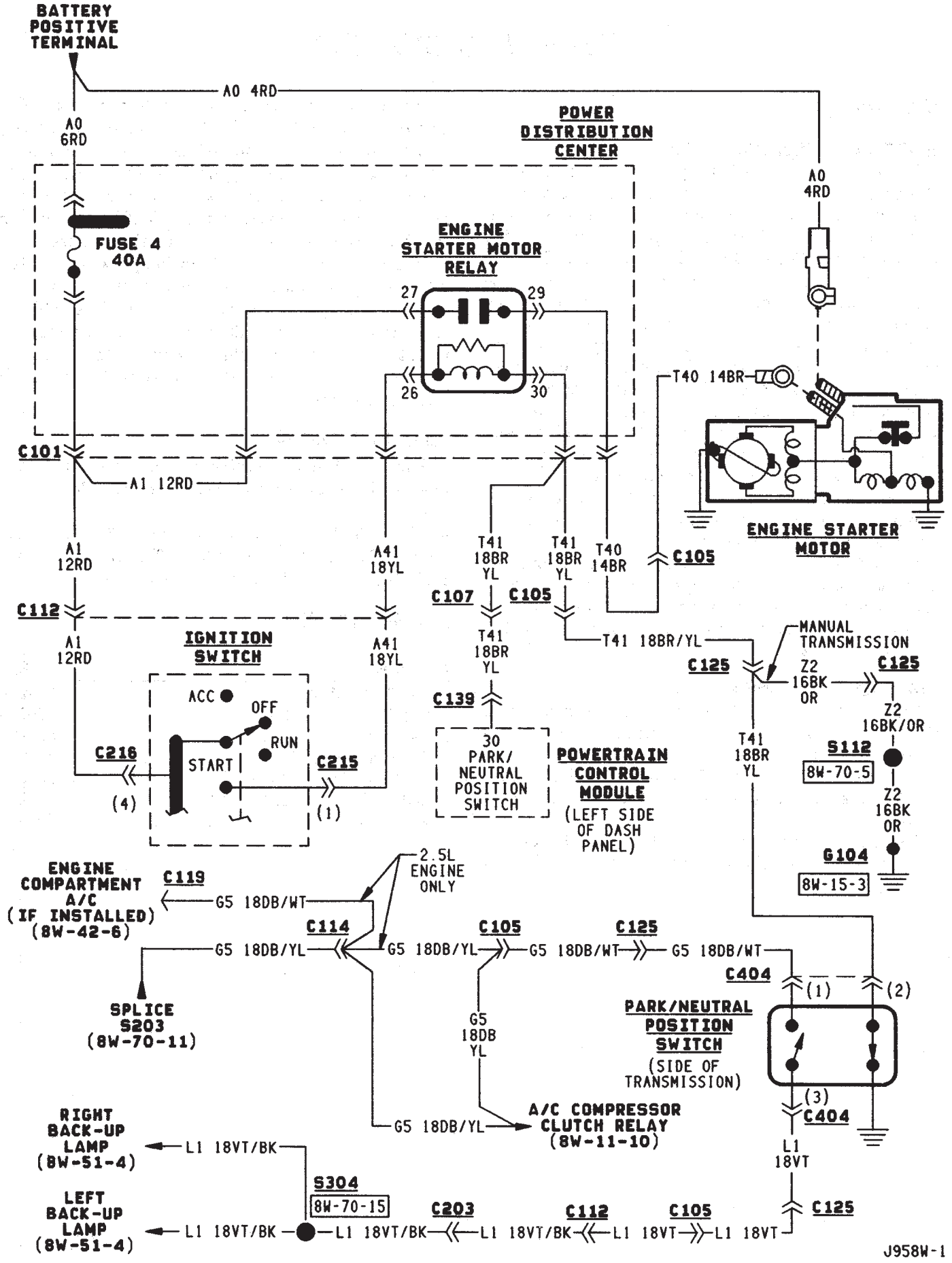
BATTERY POSITIVE TERMINAL
A0 4RD
A0 6RD
POWER DISTRIBUTION CENTER
A0 4RD
FUSE 4 40A
ENGINE STARTER MOTOR RELAY
27
29
26
30
T40 14BR
C101
A1 12RD
ENGINE STARTER MOTOR
A1 12RD
A41 18YL
T41 18BR YL
T41 18BR YL
T40 14BR
C105
C107
C105
C112
T41 18BR/YL
MANUAL TRANSMISSION
C125
Z2 16BK OR
C125
Z2 16BK/OR
IGNITION SWITCH
A1 12RD
A41 18YL
ACC
OFF
RUN
START
C216
C215
(4)
(1)
C139
T41 18BR YL
30 PARK/ NEUTRAL POSITION SWITCH
POWERTRAIN CONTROL MODULE (LEFT SIDE OF DASH PANEL)
T41 18BR YL
S112
8W-70-5
Z2 16BK OR
G104
8W-15-3
ENGINE COMPARTMENT A/C (IF INSTALLED) (8W-42-6)
C119
G5 18DB/WT
2.5L ENGINE ONLY
C114
C105
C125
G5 18DB/YL
G5 18DB/YL
G5 18DB/WT
G5 18DB/WT
C404
(1)
(2)
SPLICE S203 (8W-70-11)
G5 18DB YL
PARK/NEUTRAL POSITION SWITCH (SIDE OF TRANSMISSION)
(3)
C404
A/C COMPRESSOR CLUTCH RELAY (8W-11-10)
G5 18DB/YL
RIGHT BACK-UP LAMP (8W-51-4)
L1 18VT/BK
L1 18VT
S304
8W-70-15
LEFT BACK-UP LAMP (8W-51-4)
L1 18VT/BK
L1 18VT/BK
C203
L1 18VT/BK
C112
L1 18VT
C105
L1 18VT
C125
J958W-1

FUEL/IGNITION

INDEX

page

Automatic Shut Down (ASD) Relay 1
Battery Feed 2
Brake Switch Input 5
Camshaft Position Sensor 3
Crankshaft Position Sensor 3
Data Link Connector 5
Diagram Index 5
Engine Coolant Temperature Sensor 3
Fuel Injectors 2
Fuel Pump Module 2
Fuel Pump Relay 2
Heated Oxygen Sensor 3
Idle Air Control (IAC) Motor 2
Ignition Coil 2
Ignition Switch 1
Intake Air Temperature Sensor 4
Malfunction Indicator Lamp (MIL) 5
Manifold Absolute Pressure Sensor 4
Park/Neutral Position Switch 4
Power (Device) Ground 5
Power Steering Pressure Switch 4
Tachometer Signal 5
Throttle Position Sensor 4
Vehicle Speed Sensor 3

IGNITION SWITCH

Circuit A1 from fuse 4 in the Power Distribution Center (PDC), supplies battery voltage to the ignition switch. Depending upon position, the ignition switch powers circuits A21, A22, A31, and A41.

START POSITION

In the START position, the ignition switch connects circuit A1 to circuit A41. Circuit A41 connects to the coil side of the starter motor relay.

Also in the START position, the case grounded ignition switch provides ground for the brake lamp switch and parking brake lamp switch on circuit G11.

START OR RUN POSITION

In the START and RUN position, the ignition switch connects circuit A1 with circuit A21. The A21 circuit connects to fuses 5 and 9 in the fuse block. Fuse 9 powers circuit G5. Fuse 5 powers circuit G50.

- Circuit G5 powers the buzzer module. Circuit G5 also splices to power the daytime running lamps module (Canada only), A/C compressor clutch relay, heated rear window relay, and the gauges and indicator lamps in the instrument cluster.

RUN (ONLY) POSITION

When the ignition switch is in the RUN position, it connects circuit A1 to circuit A22. Circuit A22 powers fuses 1, 12, and 13 in the fuse block.

- Fuse 1 powers the rear wiper system on circuit V23.
- Fuse 12 feeds the blower motor and air conditioning system on circuit C1.
- Fuse 13 feeds circuit F15 which powers the ABS module and connects to the coil side of the ABS power relay.

ACCESSORY OR RUN POSITION

In the ACCESSORY or RUN position, the ignition switch connects circuit A1 to circuit A31. Circuit A31 connects to a bus bar in the fuse block that feeds fuses 4 and 7 along with the circuit breaker in cavity 11.

- Fuse 4 powers circuit L5 which feeds the turn signal flasher.
- Fuse 7 powers circuit F30. Circuit F30 supplies power to the radio, radio relay, and the cigar lighter.
- The circuit breaker in cavity 11 powers the V6 circuits which feed the wiper switch and wiper motor.

AUTOMATIC SHUT DOWN (ASD) RELAY

When the ignition switch is in either the START or RUN position, it connects circuit A1 from fuse 4 in the Power Distribution Center (PDC) to circuit A21. Circuit A21 powers fuse 5 in the fuse block. Circuit G50 from fuse 5 splices to power the coil side of the Automatic Shut Down (ASD) relay. The Powertrain Control Module (PCM) provides ground for the relay on circuit K51. Circuit K51 connects to cavity 51 of the PCM.

When the PCM grounds the ASD relay, contacts inside the relay close and connect circuit A14 from fuse 1 in the PDC to circuit A142. Circuit A142 splices to the generator field terminal, fuel injectors, ignition coil, and heated oxygen sensor. Circuit A142 also connects to cavity 57 of the PCM.

Circuit A14 from fuse 1 in the PDC supplies battery voltage to the contact side of the ASD relay.

HELPFUL INFORMATION

- Along with supplying voltage to the ASD relay contacts, circuit A14 supplies voltage to the contact side of the fuel pump relay.
- Circuit G50 also supplies battery voltage to the coil side of the fuel pump relay.
- Circuit A14 also connects to cavity 3 of the PCM.

BATTERY FEED

Circuit A14 from fuse 1 in the Power Distribution Center (PDC) supplies battery voltage to cavity 3 of the Powertrain Control Module (PCM).

HELPFUL INFORMATION

Circuit A14 also supplies power to the contact sides of the Automatic Shut Down (ASD) relay and fuel pump relay.

FUEL INJECTORS

When the Automatic Shut Down (ASD) relay contacts close, they connect circuits A14 and A142. Circuit A142 supplies voltage to the fuel injectors. Each injector has a separate ground circuit controlled by the Powertrain Control Module (PCM).

Circuit K11 provides ground for injector number one. The K11 circuit connects to cavity 16 of the PCM.

Circuit K12 provides ground for injector number two. The K12 circuit connects to cavity 15 of the PCM.

Circuit K13 provides ground for injector number three. The K13 circuit connects to cavity 14 of the PCM.

Circuit K14 provides ground for injector number four. The K14 circuit connects to cavity 13 of the PCM.

On the 4.0L engine, circuit K15 provides ground for injector number five. The K15 circuit connects to cavity 38 of the PCM.

Also on the 4.0L engine, circuit K16 provides ground for injector number six. The K16 circuit connects to cavity 58 of the PCM.

HELPFUL INFORMATION

- Circuit A142 splices to supply voltage to the fuel injectors, ignition coil, PCM, generator, and heated oxygen sensor.
- For information about fuel injector operation, refer to Group 14.

IGNITION COIL

When the Automatic Shut Down (ASD) relay contacts close, they connect circuits A14 and A142. Circuit A142 splices to supply voltage to the ignition coil. The Powertrain Control Module (PCM) controls the ground path for the ignition coil on circuit K19. Circuit K19 connects to cavity 19 of the PCM.

HELPFUL INFORMATION

Circuit A142 splices to supply voltage to the fuel injectors, ignition coil, PCM, generator, and heated oxygen sensor.

FUEL PUMP RELAY

When the ignition switch is in either the START or RUN position, it connects circuit A1 from fuse 4 in the Power Distribution Center (PDC) to circuit A21. Circuit A21 powers fuse 5 in the fuse block. Circuit G50 from fuse 5 splices to power the coil side of the fuel pump relay. The Powertrain Control Module (PCM) provides ground for the relay on circuit K51. Circuit K51 connects to cavity 51 of the PCM.

When the PCM grounds the fuel pump relay, contacts inside the relay close and connect circuit A14 from fuse 1 in the PDC to circuit A141. Circuit A141 supplies voltage to the fuel pump motor (part of the in-tank fuel pump module).

HELPFUL INFORMATION

- Circuit A14 is double crimped at the fuel pump relay and supplies voltage to the contact sides of the fuel pump relay and ASD relay.
- Circuit G50 also supplies battery voltage to the coil side of the ASD relay.
- Circuit A14 also connects to cavity 3 of the PCM.

FUEL PUMP MODULE

FUEL PUMP MOTOR

When the fuel pump relay contacts close, circuit A141 feeds the fuel pump motor. Circuit Z2 provides ground for the fuel pump motor.

FUEL LEVEL SENSOR

The fuel level sensor is a variable resistor. Circuit G4 connects the fuel level sensor to the fuel gauge in the instrument cluster. Circuit G5 from fuse 9 in the fuse block supplies voltage to the fuel gauge. The fuel level sensor draws voltage from circuit G5 through the fuel gauge on circuit G4.

Circuit Z2 provides the ground path for the fuel level sensor.

HELPFUL INFORMATION

As current flows through the coils in the fuel gauge, it creates a magnetic field. One of the coils in the gauge receives fixed current. The other coil is connected to the level sensor. The magnetic field controls the position of the fuel gauge pointer.

The fuel level sensor contains a variable resistor. As the position of the float arm on the fuel level sensor changes, the resistor changes the current flow through second coil in the fuel gauge. A change in current flow alters the magnetic field in the fuel gauge, which changes the pointer position.

IDLE AIR CONTROL (IAC) MOTOR

The Powertrain Control Module (PCM) operates the idle air control motor through 4 circuits - K39, K40, K59, and K60. Each circuit connects to separate cavities in the PCM connector.

- Circuit K39 connects to cavity 39 of the PCM.
- Circuit K40 connects to cavity 40 of the PCM.
- Circuit K59 connects to cavity 59 of the PCM.

• Circuit K60 connects to cavity 60 of the PCM.

VEHICLE SPEED SENSOR

Circuit K7 supplies 8 volts from the Powertrain Control Module (PCM) to the vehicle speed sensor. The K7 circuit connects to cavity 7 of the PCM.

Circuit G7 from the vehicle speed sensor provides an input signal to the PCM. The G7 circuit connects to cavity 47 of the PCM.

The PCM provides a ground for the vehicle speed sensor signal (circuit G7) through circuit K4. Circuit K4 connects to cavity 4 of the PCM.

HELPFUL INFORMATION

• Circuit G7 splices to the speedometer, and Daytime Running Lamp module (DRL).

• Circuit K7 splices to supply 8 volts to the camshaft position sensor and crankshaft position sensor.

Circuit K4 splices to supply ground for the signals from the following:

• Heated oxygen sensor
• Camshaft position sensor
• Crankshaft position sensor
• Throttle position sensor
• Manifold absolute pressure sensor
• Engine coolant temperature sensor
• Intake air temperature sensor

HEATED OXYGEN SENSOR

When the Automatic Shut Down (ASD) relay contacts close, they connect circuits A14 and A142. Circuit A142 splices to supply voltage to the heated oxygen sensor.

Circuit K41 delivers the signal from the heated oxygen sensor to the Powertrain Control Module (PCM). Circuit K41 connects to cavity 41 of the PCM.

The PCM provides a ground for the heated oxygen sensor signal (circuit K41) through circuit K4. Circuit K4 connects to cavity 4 of the PCM connector.

Circuit Z1 provides a ground for the heater circuit in the sensor. Circuit Z1 terminates at the rear of the engine.

HELPFUL INFORMATION

• Along with supplying voltage to the ASD relay contacts, circuit A14 supplies voltage to the contact side of the fuel pump relay.

• Circuit A142 splices to supply voltage to the fuel injectors, ignition coil, and heated oxygen sensor.

Circuit K4 splices to supply ground for the signals from the following:

• Camshaft position sensor
• Crankshaft position sensor
• Intake air temperature sensor
• Throttle position sensor
• Manifold absolute pressure sensor
• Engine coolant temperature sensor
• Vehicle speed sensor

CAMSHAFT POSITION SENSOR

The Powertrain Control Module (PCM) supplies 8 volts to the camshaft position sensor (in distributor) on circuit K7. Circuit K7 connects to cavity 7 of the PCM.

The PCM receives the camshaft position sensor signal on circuit K44. Circuit K44 connects to cavity 44 of the PCM.

The PCM provides a ground for the camshaft position sensor signal (circuit K44) through circuit K4. Circuit K4 connects to cavity 4 of the PCM.

HELPFUL INFORMATION

• Circuit K7 splices to supply 8 volts to the crankshaft position sensor and the vehicle speed sensor.

Circuit K4 splices to supply ground for the signals from the following:

• Heated oxygen sensor
• Crankshaft position sensor
• Intake air temperature sensor
• Throttle position sensor
• Manifold absolute pressure sensor
• Engine coolant temperature sensor
• Vehicle speed sensor

CRANKSHAFT POSITION SENSOR

The Powertrain Control Module (PCM) supplies 8 volts to the crankshaft position sensor on circuit K7. Circuit K7 connects to cavity 7 of the PCM.

The PCM receives the crankshaft position sensor signal on circuit K24. Circuit K24 connects to cavity 24 of the PCM.

The PCM provides a ground for the crankshaft position sensor (circuit K24) through circuit K4. Circuit K4 connects to cavity 4 of the PCM.

HELPFUL INFORMATION

• Circuit K7 splices to supply 8 volts to the crankshaft position sensor and the vehicle speed sensor.

Circuit K4 splices to supply ground for the signals from the following:

• Heated oxygen sensor
• Camshaft position sensor
• Intake air temperature sensor
• Throttle position sensor
• Manifold absolute pressure sensor
• Engine coolant temperature sensor
• Vehicle speed sensor

ENGINE COOLANT TEMPERATURE SENSOR

The engine coolant temperature sensor provides an input to the Powertrain Control Module (PCM) on circuit K2. From circuit K2, the engine coolant temperature sensor draws up to 5 volts from the PCM. The sensor is a variable resistor. As coolant temperature changes, the resistance in the sensor changes, causing a change in current draw. The K2 circuit connects to cavity 2 of the PCM.

The PCM provides a ground for the engine coolant temperature sensor signal (circuit K2) through circuit K4. Circuit K4 connects to cavity 4 of the PCM connector.

HELPFUL INFORMATION

Circuit K4 splices to supply ground for the signals from the following:

- Heated oxygen sensor
- Camshaft position sensor
- Crankshaft position sensor
- Intake air temperature sensor
- Throttle position sensor
- Manifold absolute pressure sensor
- Vehicle speed sensor

THROTTLE POSITION SENSOR

From the Powertrain Control Module (PCM), circuit K6 supplies 5 volts to the Throttle Position Sensor (TPS). Circuit K6 connects to cavity 6 of the PCM.

Circuit K22 delivers the TPS signal to the PCM. Circuit K22 connects to cavity 22 of the PCM.

The PCM provides a ground for the throttle position sensor signal (circuit K22) through circuit K4. Circuit K4 connects to cavity 4 of the PCM.

HELPFUL INFORMATION

Refer to Group 14 for throttle position sensor operation.

Circuit K6 splices to supply 5 volts to the Manifold Absolute Pressure (MAP) sensor.

Circuit K4 splices to supply ground for the signals from the following:

- Heated oxygen sensor
- Camshaft position sensor
- Crankshaft position sensor
- Intake air temperature sensor
- Manifold absolute pressure sensor
- Engine coolant temperature sensor
- Vehicle speed sensor

MANIFOLD ABSOLUTE PRESSURE (MAP) SENSOR

From the Powertrain Control Module (PCM), circuit K6 supplies 5 volts to the Manifold Absolute Pressure (MAP) sensor. Circuit K6 connects to cavity 6 of the PCM.

Circuit K1 delivers the MAP signal to the PCM. Circuit K1 connects to cavity 1 of the PCM.

The PCM provides a ground for the MAP sensor signal (circuit K1) through circuit K4. Circuit K4 connects to cavity 4 of the PCM.

HELPFUL INFORMATION

Refer to Group 14 for MAP sensor operation.

Circuit K6 splices to supply 5 volts to the throttle position sensor.

Circuit K4 splices to supply ground for the signals from the following:

- Heated oxygen sensor
- Camshaft position sensor
- Crankshaft position sensor
- Intake air temperature sensor
- Throttle position sensor
- Engine coolant temperature sensor
- Vehicle speed sensor

INTAKE AIR TEMPERATURE SENSOR

The intake air temperature sensor provides an input to the Powertrain Control Module (PCM) on circuit K21. Circuit K21 connects to cavity 21 of the PCM.

From circuit K21, the intake air temperature sensor draws voltage from the PCM. The sensor is a variable resistor. As intake air temperature changes, the resistance in the sensor changes, causing a change in current draw.

The PCM provides a ground for the intake air temperature sensor signal (circuit K21) through circuit K4. Circuit K4 connects to cavity 4 of the PCM.

HELPFUL INFORMATION

Circuit K4 splices to supply ground for the signals from the following:

- Heated oxygen sensor
- Camshaft position sensor
- Crankshaft position sensor
- Throttle position sensor
- Manifold absolute pressure sensor
- Engine coolant temperature sensor
- Vehicle speed sensor

PARK/NEUTRAL POSITION SWITCH

When closed, the case-grounded park/neutral position switch provides a ground path on circuit T41 for the coil side of the starter motor relay. Circuit A41 from the ignition switch provides battery voltage to the coil side of the relay.

Circuit T41 splices to cavity 30 of the Powertrain Control Module (PCM). The park/neutral position switch provides an input to the (PCM).

HELPFUL INFORMATION

- In the START position, the ignition switch connects circuit A1 from the Power Distribution Center (PDC) to circuit A41. Fuse 4 in the fuse block protects circuits A1 and A41.
- The Park/Neutral position switch and back-up lamp switch are molded together.

POWER STEERING PRESSURE SWITCH

The Powertrain Control Module (PCM) supplies voltage to the power steering pressure switch on circuit K10. Circuit Z1 provides ground for the switch. When the switch closes, voltage flows through the

switch to ground on circuit Z1. The switch closes during periods of high power steering pump load and low engine speed; such as parking maneuvers. Circuit K10 connects to cavity 10 of the PCM.

TACHOMETER SIGNAL

The Powertrain Control Module (PCM) supplies the signal for the tachometer on circuit G21. Circuit G21 connects to cavity 43 of the PCM.

MALFUNCTION INDICATOR LAMP (MIL)

The Powertrain Control Module (PCM) provides ground for the instrument cluster malfunction indicator lamp on circuit G3. The MIL displays the message CHECK ENGINE when illuminated. Circuit G5 provides voltage for the lamp.

DATA LINK CONNECTOR

Circuit G50 supplies battery voltage to the data link connector. Circuit G50 originates at fuse 5 in the fuse block. Circuit G50 is double crimped at the data link connector and connects to cavity 9 of the Powertrain Control Module (PCM).

Circuit A21 from the ignition switch powers fuse 5 when the switch is in the START or RUN positions. In the START or RUN position the ignition switch connects circuit A1 from fuse 4 in the Power Distribution Center (PDC) with circuit A21.

Circuit D20 connects to cavity 45 of the PCM. Circuit D20 is the SCI receive circuit for the PCM.

Circuit D21 connects to cavity 25 of the PCM. Circuit D21 is the SCI transmit circuit for the PCM.

Circuit Z11 provides ground for the data link connector. Circuit Z11 splices to circuit Z1 which terminates at the right rear of the engine. Circuit Z11 also connects to cavity 5 of the PCM.

HELPFUL INFORMATION

- Circuit Z1 also supplies a ground for the PCM high current drivers.
- If the system loses ground for the Z1 and Z11 circuits at the right rear of the engine, the vehicle will not operate. Check the connection at the ganged-ground circuit eyelet.

BRAKE SWITCH INPUT

Circuit V40 provides the brake switch input to the Powertrain Control Module (PCM). Circuit V40 connects to cavity 29 of the PCM.

POWER (DEVICE) GROUND

Circuit Z11 connects to cavities 11 and 12 of the Powertrain Control Module (PCM). The Z1 circuit provides ground for PCM internal drivers that operate high current devices like the injectors and ignition coil.

Internal to the PCM, the power (device) ground circuit connects to the PCM sensor return circuit (from circuit K4).

HELPFUL INFORMATION

- The grounding point for circuit Z1 is the right rear of the engine.
- If the system loses ground for the Z1 circuits at the rear of the engine, the vehicle will not operate. Check the connection at the ganged-ground circuit eyelet.

DIAGRAM INDEX

Component	Page
Automatic Shut Down Relay	8W-30-6, 14
Camshaft Position Sensor	8W-30-10, 16
Crankshaft Position Sensor	8W-30-10, 16
Data Link Connector	8W-30-11, 17
Daytime Running Lamps (DRL) Module	8W-30-11, 17
Engine Coolant Temperature Sensor	8W-30-9, 18
Fuel Pump Relay	8W-30-20
Fuel Tank Level Unit	8W-30-21
Fuse 1 (PDC)	8W-30-6, 14
Fuse 4 (PDC)	8W-30-6, 14
Fuse 5 (Fuse Block)	8W-30-6, 14, 20
Heated Oxygen Sensor	8W-30-7, 15
Idle Air Control Motor	8W-30-12, 18
Ignition Switch	8W-30-6, 14, 20
Ignition Coil	8W-30-12, 18
Injectors (4.0L)	8W-30-13
Injectors (2.5L)	8W-30-8
Instrument Cluster	8W-30-11, 17
Intake Air Temperature Sensor	8W-30-9, 18
MAP Sensor	8W-30-9, 18
Power Steering Pressure Switch	8W-30-12
Powertrain Control Module	8W-30-6 thru 21
Throttle Position Sensor	8W-30-9, 18
Vehicle Speed Sensor	8W-30-11, 17

2.5L ENGINE

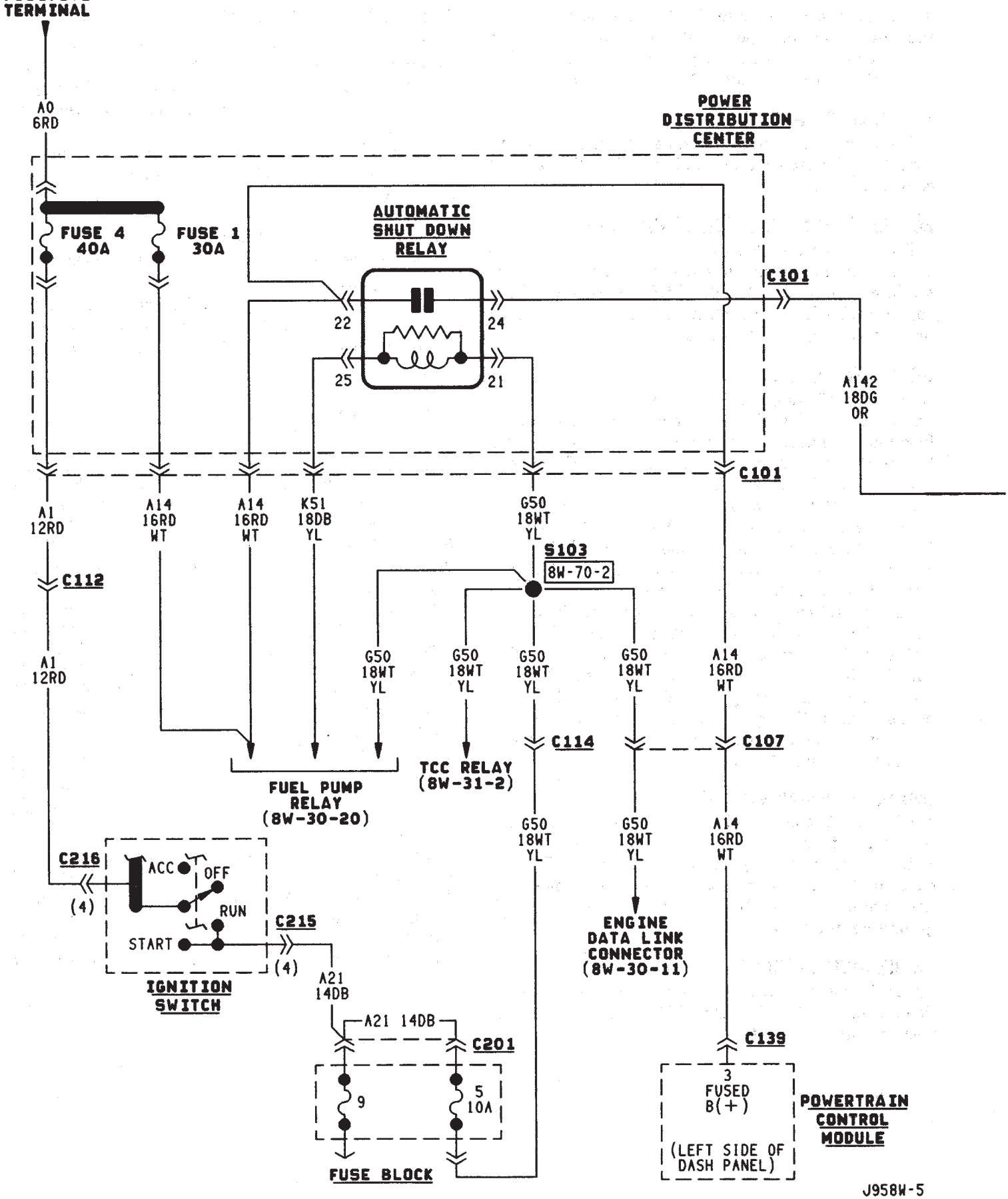
BATTERY POSITIVE TERMINAL
A0 6RD
POWER DISTRIBUTION CENTER
FUSE 4 40A
FUSE 1 30A
AUTOMATIC SHUT DOWN RELAY
22
24
25
21
C101
A142 18DG OR
A1 12RD
A14 16RD WT
A14 16RD WT
K51 18DB YL
G50 18WT YL
S103
8W-70-2
C112
G50 18WT YL
G50 18WT YL
G50 18WT YL
G50 18WT YL
A14 16RD WT
C114
C107
FUEL PUMP RELAY (8W-30-20)
TCC RELAY (8W-31-2)
C216
ACC
OFF
RUN
START
(4)
C215
(4)
IGNITION SWITCH
A21 14DB
A21 14DB
C201
9
5 10A
FUSE BLOCK
G50 18WT YL
G50 18WT YL
A14 16RD WT
ENGINE DATA LINK CONNECTOR (8W-30-11)
C139
3
FUSED B(+)
(LEFT SIDE OF DASH PANEL)
POWERTRAIN CONTROL MODULE
J958W-5

2.5L ENGINE

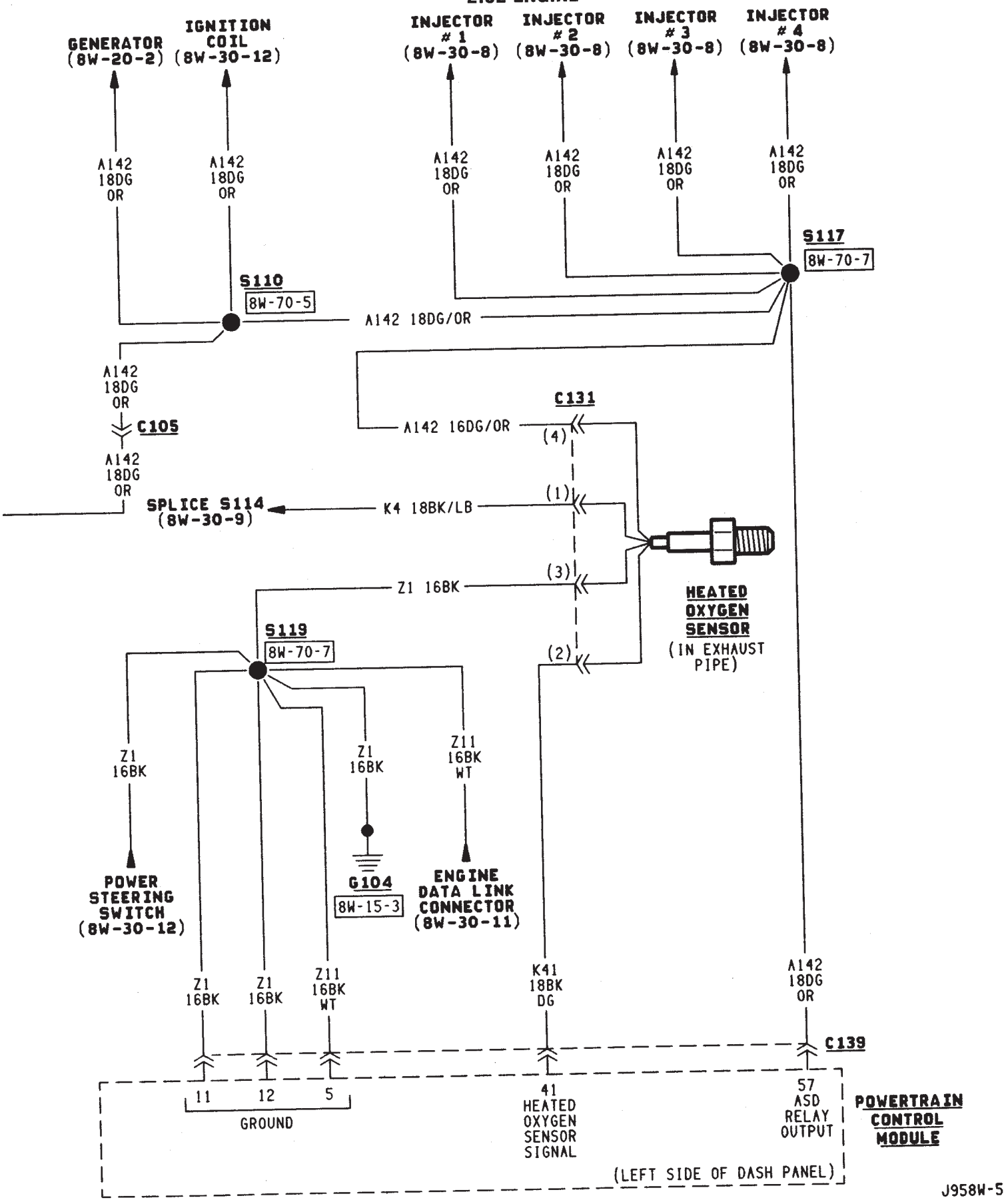
GENERATOR (8W-20-2)
IGNITION COIL (8W-30-12)
INJECTOR #1 (8W-30-8)
INJECTOR #2 (8W-30-8)
INJECTOR #3 (8W-30-8)
INJECTOR #4 (8W-30-8)
A142 18DG OR
S110
8W-70-5
S117
8W-70-7
A142 18DG/OR
C105
C131
A142 16DG/OR
(4)
(1)
(3)
(2)
SPLICE S114 (8W-30-9)
K4 18BK/LB
Z1 16BK
HEATED OXYGEN SENSOR (IN EXHAUST PIPE)
S119
8W-70-7
Z11 16BK WT
POWER STEERING SWITCH (8W-30-12)
G104
8W-15-3
ENGINE DATA LINK CONNECTOR (8W-30-11)
K41 18BK DG
C139
11
12
5
GROUND
41 HEATED OXYGEN SENSOR SIGNAL
57 ASD RELAY OUTPUT
POWERTRAIN CONTROL MODULE
(LEFT SIDE OF DASH PANEL)
J958W-5

2.5L ENGINE

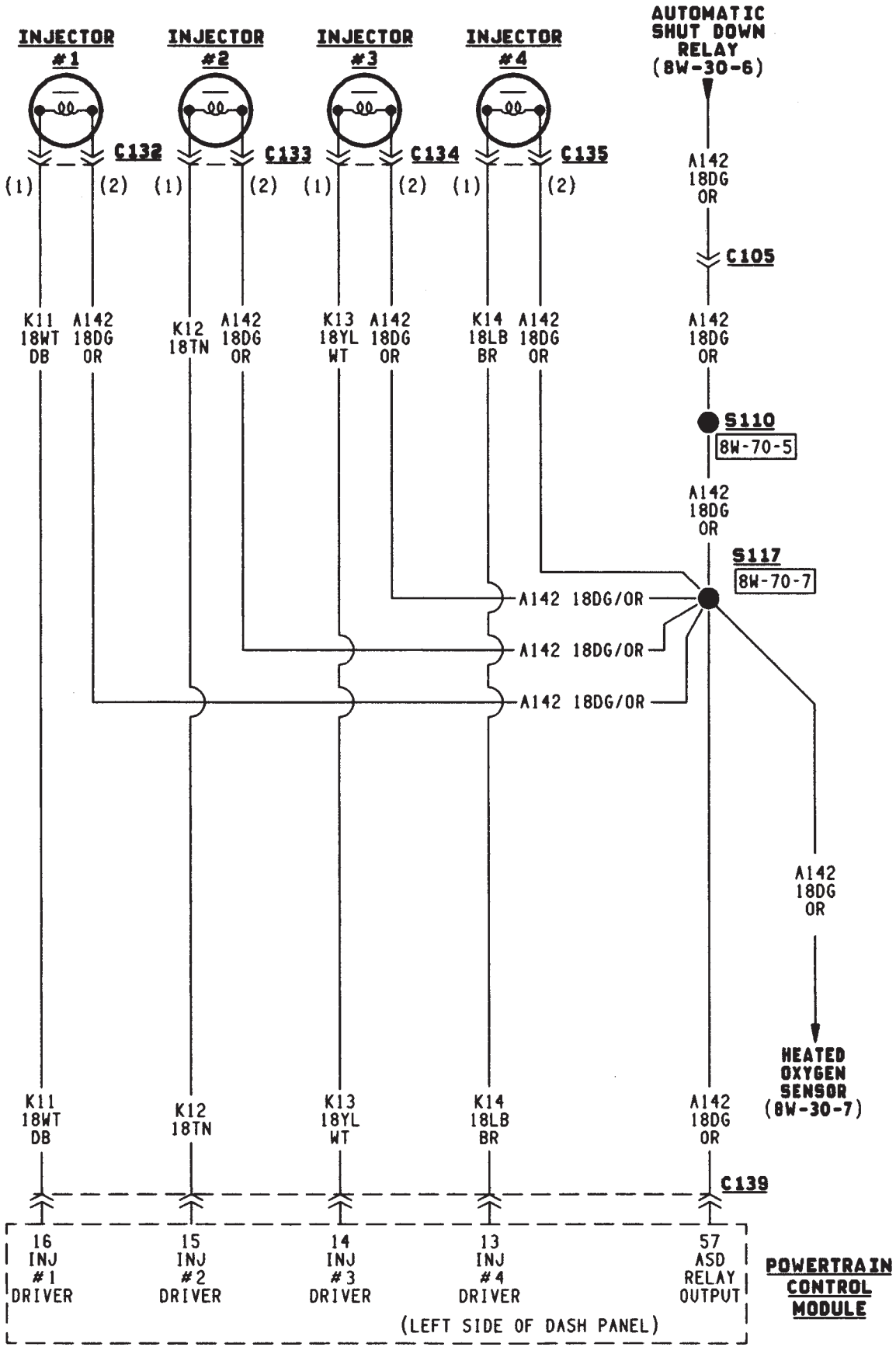
INJECTOR #1
INJECTOR #2
INJECTOR #3
INJECTOR #4
AUTOMATIC SHUT DOWN RELAY (8W-30-6)
C132
C133
C134
C135
(1)
(2)
A142 18DG OR
C105
K11 18WT DB
K12 18TN
K13 18YL WT
K14 18LB BR
S110
8W-70-5
S117
8W-70-7
A142 18DG/OR
HEATED OXYGEN SENSOR (8W-30-7)
C139
16 INJ #1 DRIVER
15 INJ #2 DRIVER
14 INJ #3 DRIVER
13 INJ #4 DRIVER
57 ASD RELAY OUTPUT
(LEFT SIDE OF DASH PANEL)
POWERTRAIN CONTROL MODULE
J958W-5

2.5L ENGINE

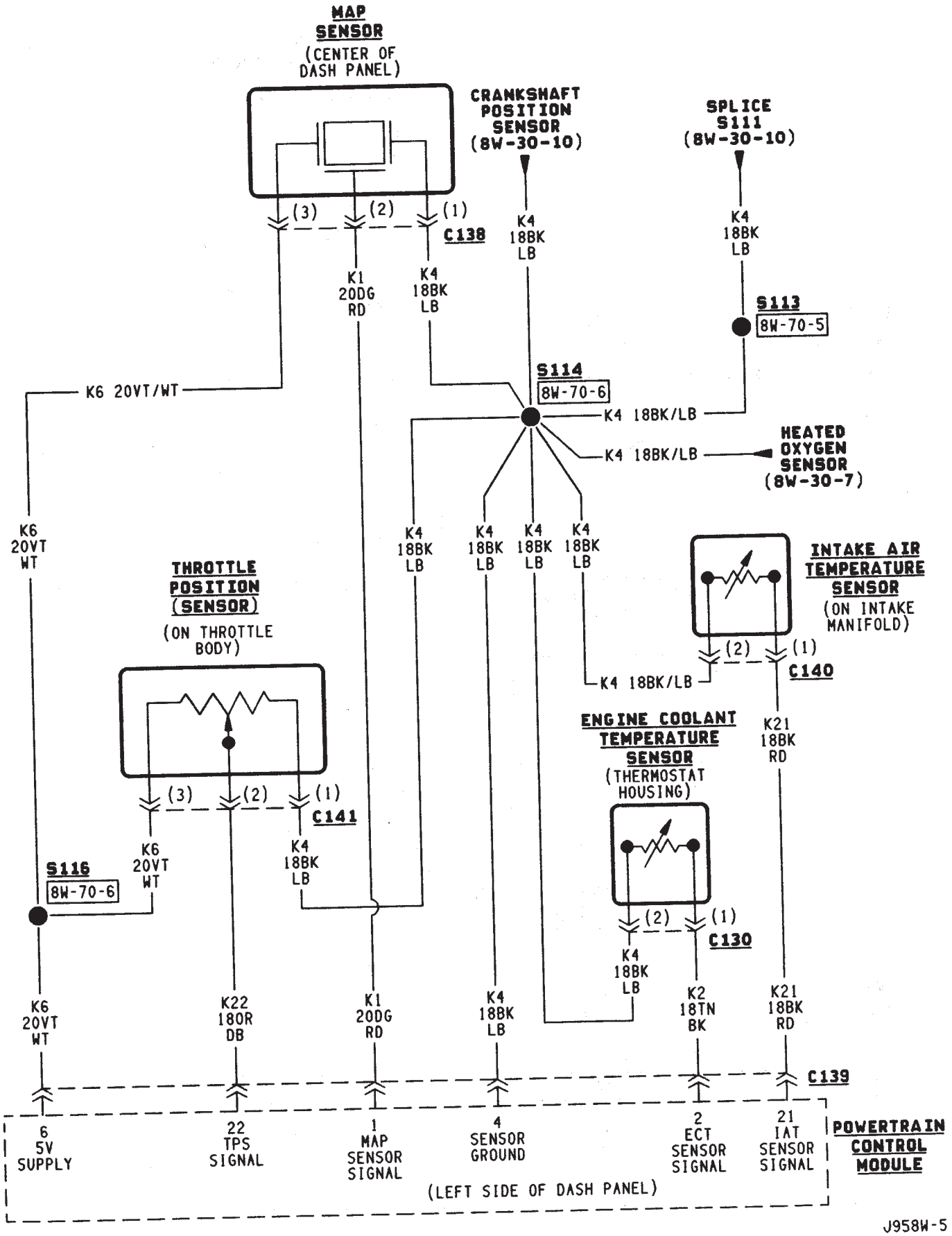
MAP SENSOR
(CENTER OF DASH PANEL)
CRANKSHAFT POSITION SENSOR (8W-30-10)
SPLICE S111 (8W-30-10)
(3)
(2)
(1)
C138
K1 20DG RD
K4 18BK LB
K4 18BK LB
K4 18BK LB
S113
8W-70-5
S114
8W-70-6
K6 20VT/WT
K4 18BK/LB
K4 18BK/LB
HEATED OXYGEN SENSOR (8W-30-7)
K6 20VT WT
K4 18BK LB
K4 18BK LB
K4 18BK LB
K4 18BK LB
INTAKE AIR TEMPERATURE SENSOR
(ON INTAKE MANIFOLD)
(2)
(1)
C140
K4 18BK/LB
THROTTLE POSITION (SENSOR)
(ON THROTTLE BODY)
ENGINE COOLANT TEMPERATURE SENSOR
(THERMOSTAT HOUSING)
K21 18BK RD
(3)
(2)
(1)
C141
K6 20VT WT
K4 18BK LB
S116
8W-70-6
(2)
(1)
C130
K4 18BK LB
K6 20VT WT
K22 180R DB
K1 20DG RD
K4 18BK LB
K2 18TN BK
K21 18BK RD
C139
6 5V SUPPLY
22 TPS SIGNAL
1 MAP SENSOR SIGNAL
4 SENSOR GROUND
2 ECT SENSOR SIGNAL
21 IAT SENSOR SIGNAL
POWERTRAIN CONTROL MODULE
(LEFT SIDE OF DASH PANEL)
J958W-5

2.5L ENGINE

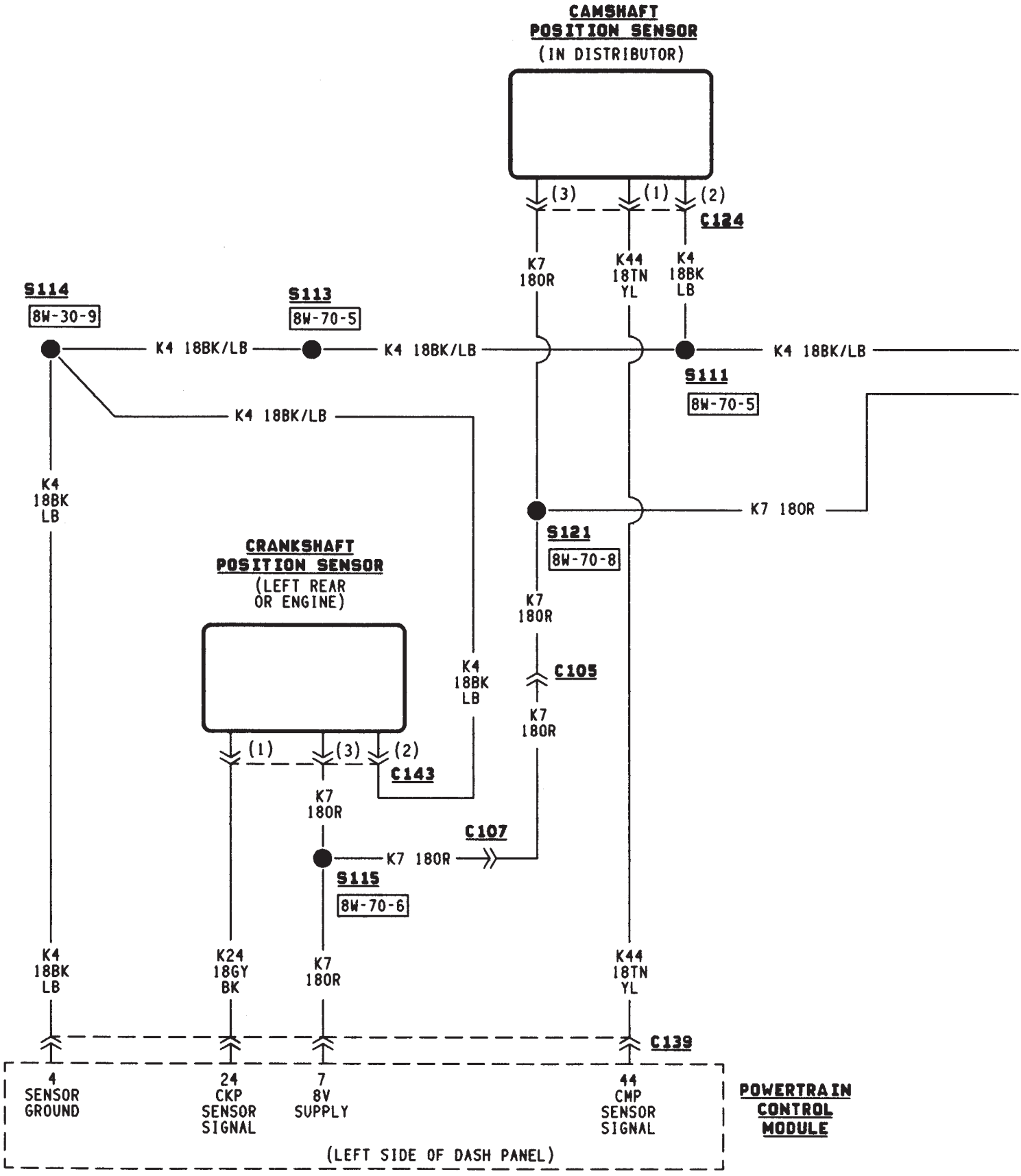

J958W-5

2.5L ENGINE

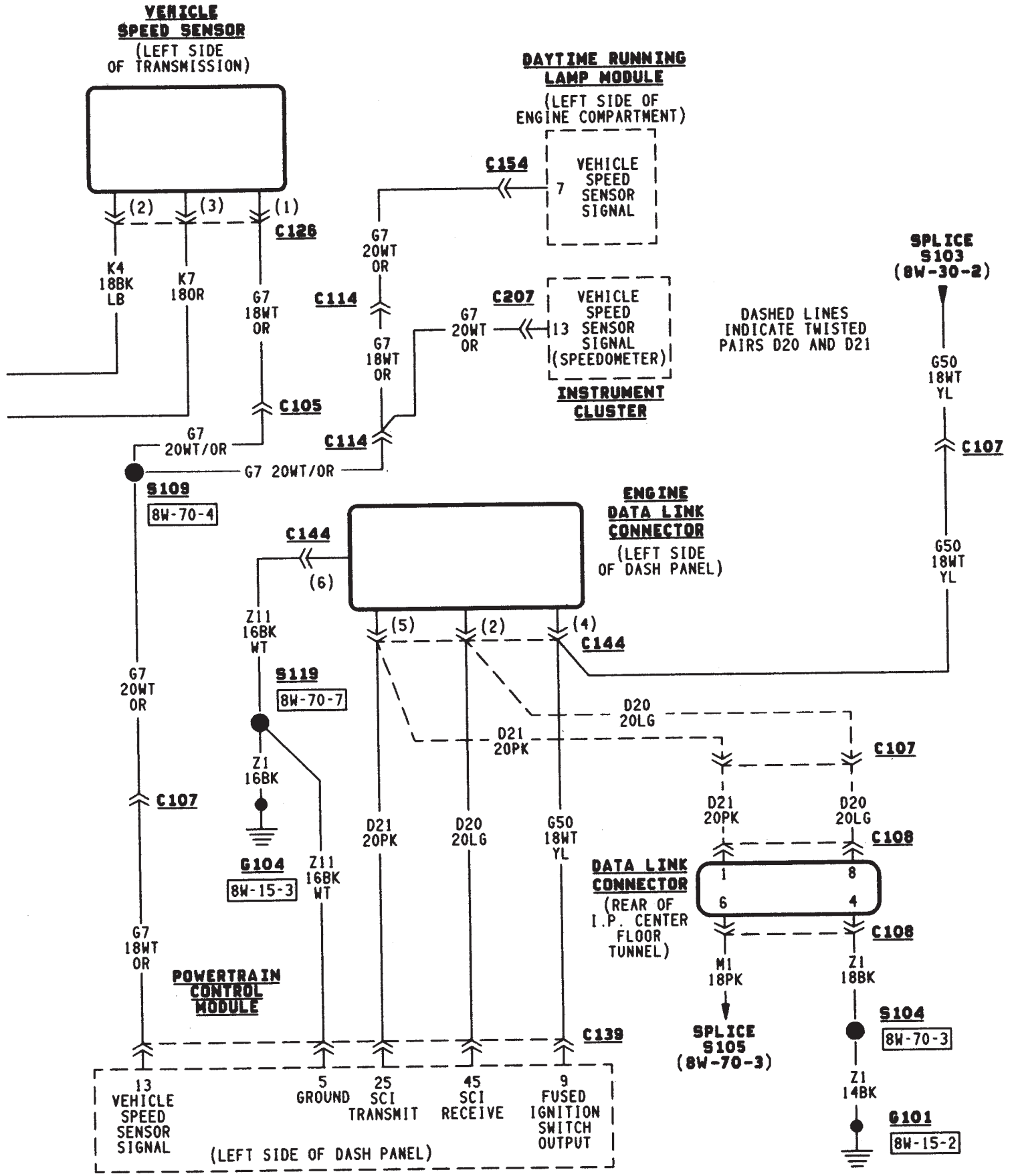

J958W-5

2.5L ENGINE

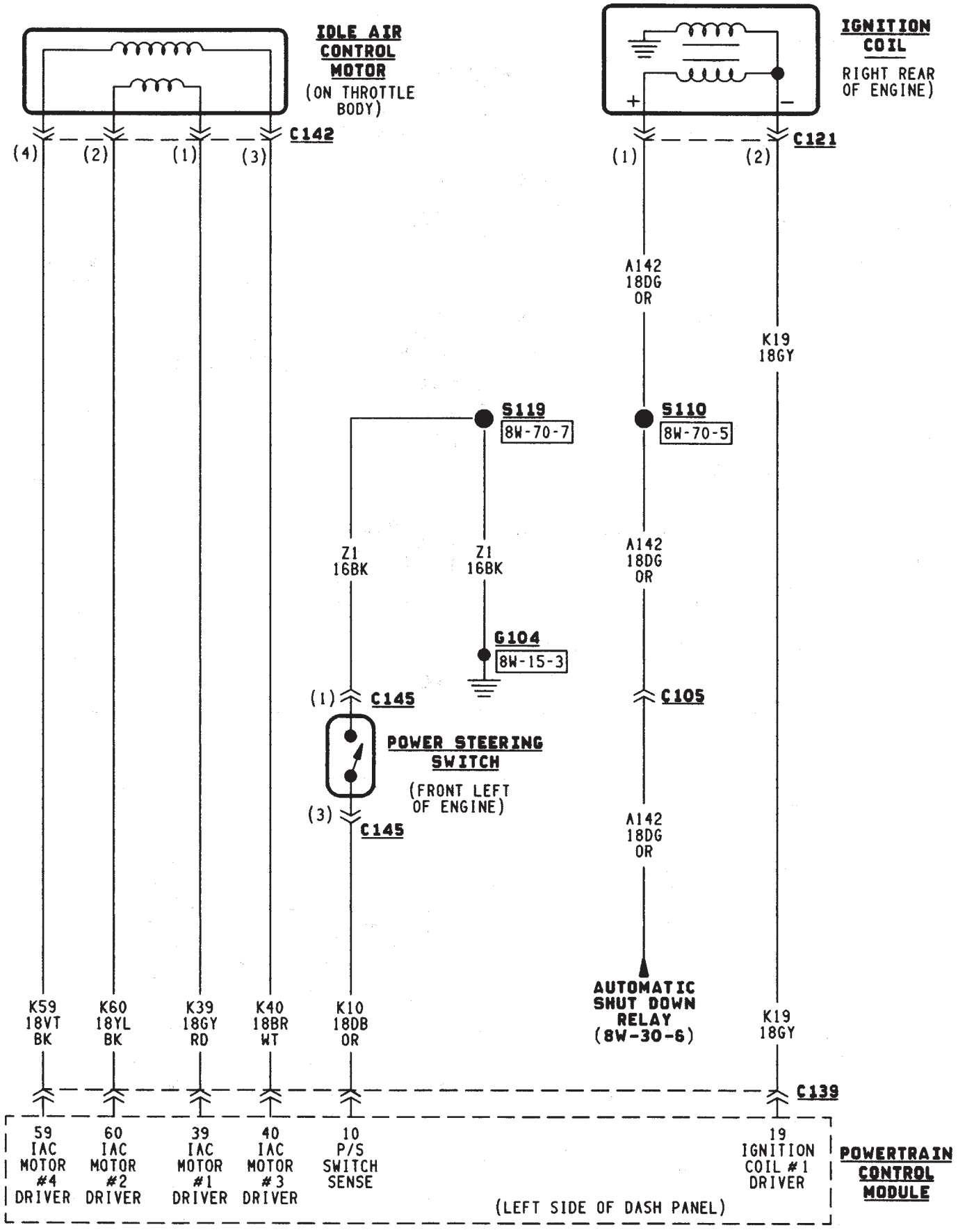

J958W-5

4.0L ENGINE

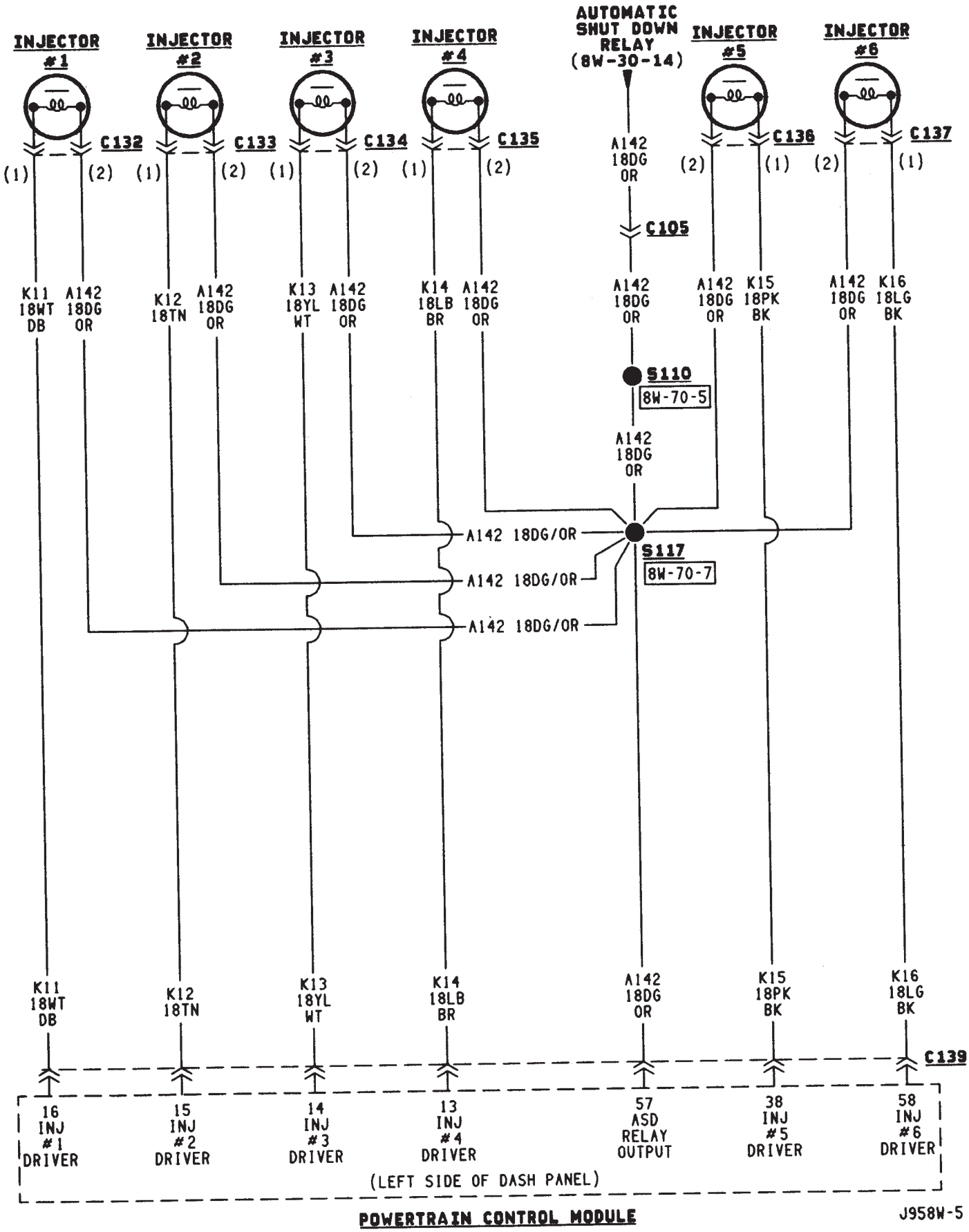
INJECTOR #1
INJECTOR #2
INJECTOR #3
INJECTOR #4
AUTOMATIC SHUT DOWN RELAY (8W-30-14)
INJECTOR #5
INJECTOR #6
C132
C133
C134
C135
C136
C137
C105
S110
8W-70-5
S117
8W-70-7
K11 18WT DB
K12 18TN
K13 18YL WT
K14 18LB BR
K15 18PK BK
K16 18LG BK
A142 18DG OR
A142 18DG/OR
C139
16 INJ #1 DRIVER
15 INJ #2 DRIVER
14 INJ #3 DRIVER
13 INJ #4 DRIVER
57 ASD RELAY OUTPUT
38 INJ #5 DRIVER
58 INJ #6 DRIVER
(LEFT SIDE OF DASH PANEL)
POWERTRAIN CONTROL MODULE
J958W-5

4.0L ENGINE

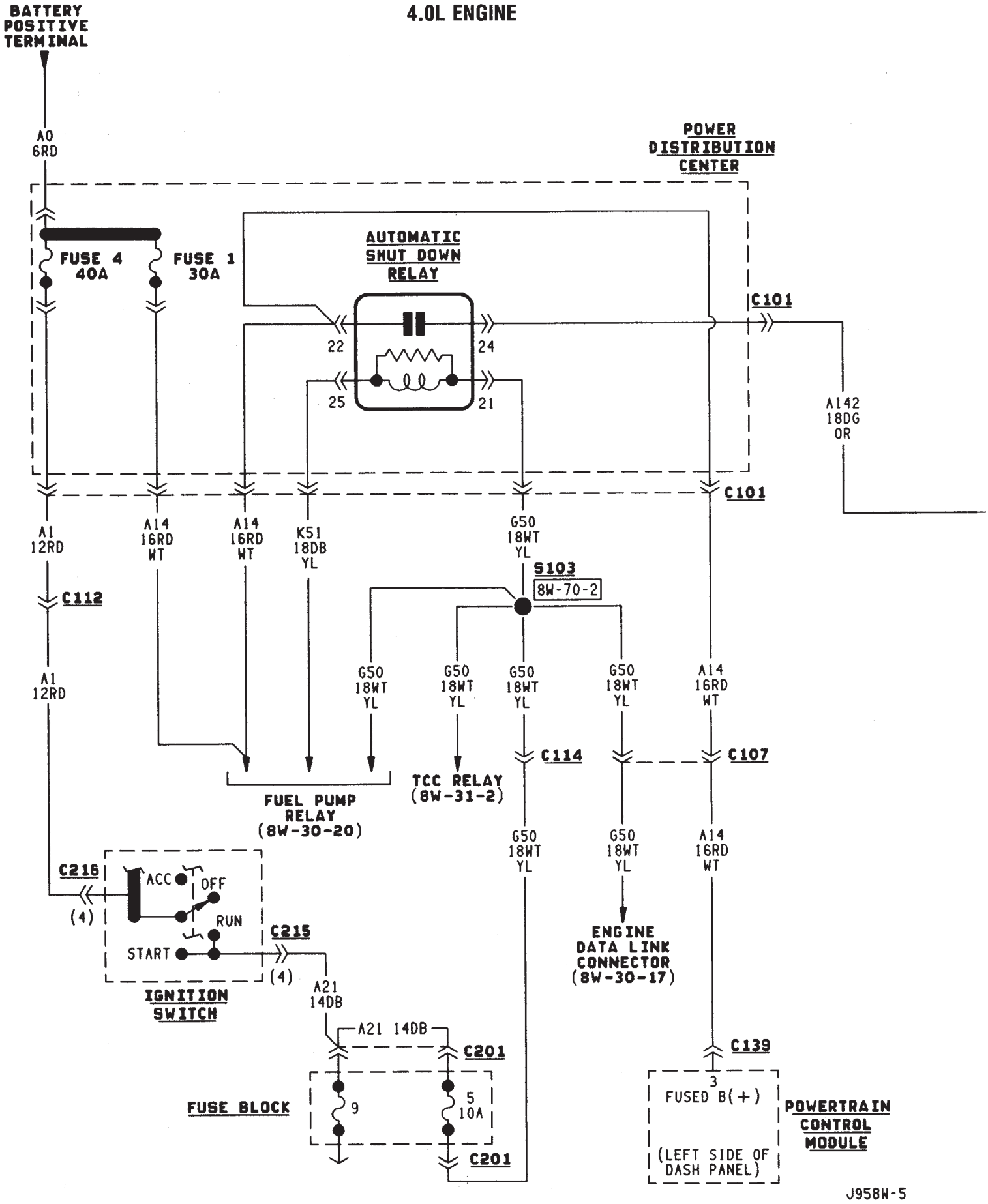
BATTERY POSITIVE TERMINAL
A0 6RD
POWER DISTRIBUTION CENTER
FUSE 4 40A
FUSE 1 30A
AUTOMATIC SHUT DOWN RELAY
22
24
25
21
C101
A142 18DG OR
A1 12RD
A14 16RD WT
A14 16RD WT
K51 18DB YL
G50 18WT YL
S103
8W-70-2
C112
G50 18WT YL
G50 18WT YL
G50 18WT YL
G50 18WT YL
A14 16RD WT
C114
C107
TCC RELAY (8W-31-2)
FUEL PUMP RELAY (8W-30-20)
C216
ACC
OFF
RUN
START
(4)
C215
(4)
IGNITION SWITCH
A21 14DB
A21 14DB
C201
FUSE BLOCK
9
5 10A
C201
ENGINE DATA LINK CONNECTOR (8W-30-17)
C139
3
FUSED B(+)
(LEFT SIDE OF DASH PANEL)
POWERTRAIN CONTROL MODULE
J958W-5

4.0L ENGINE

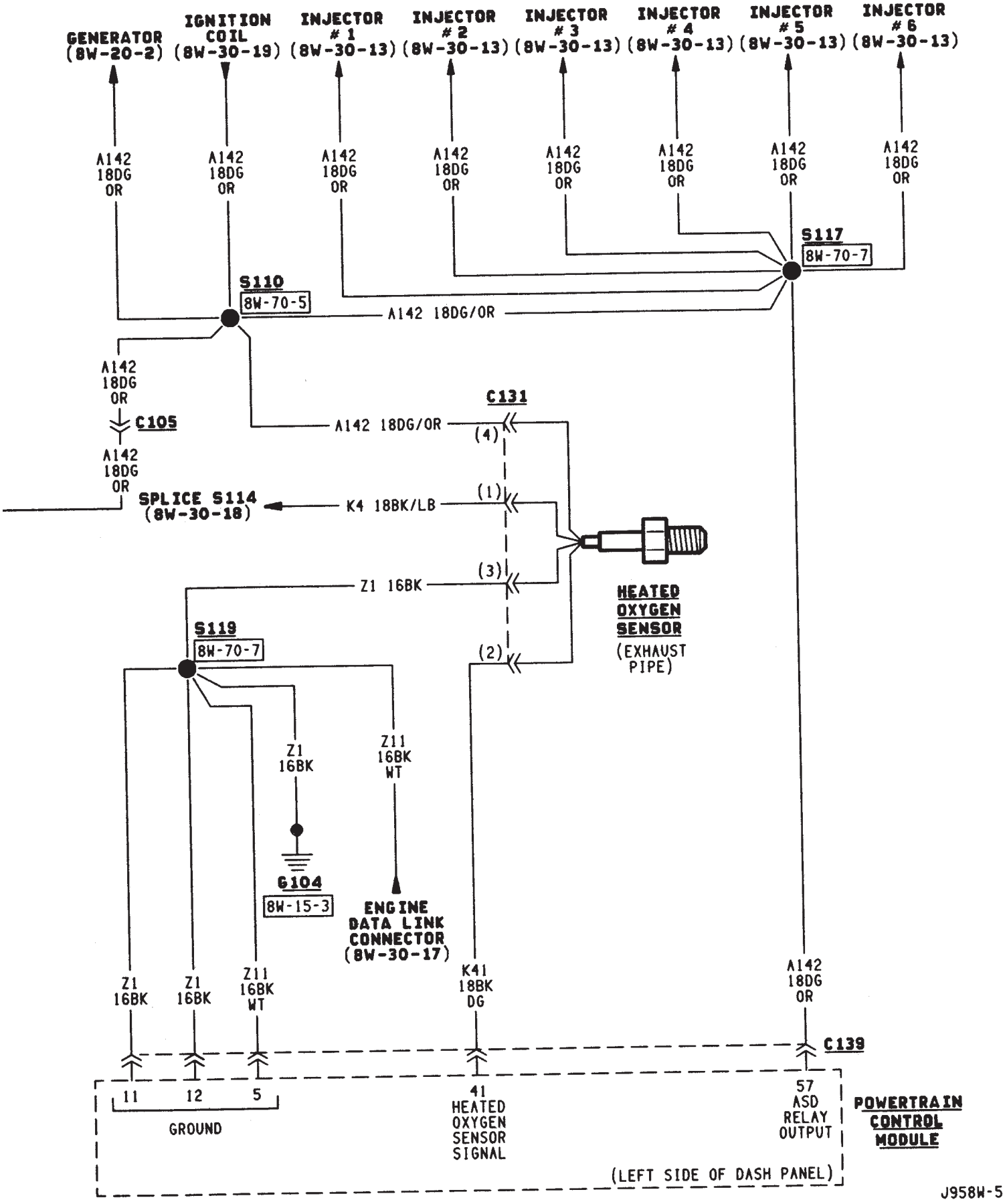
GENERATOR (8W-20-2)
IGNITION COIL (8W-30-19)
INJECTOR #1 (8W-30-13)
INJECTOR #2 (8W-30-13)
INJECTOR #3 (8W-30-13)
INJECTOR #4 (8W-30-13)
INJECTOR #5 (8W-30-13)
INJECTOR #6 (8W-30-13)
A142 18DG OR
S117 8W-70-7
S110 8W-70-5
A142 18DG/OR
C105
C131
(4)
(1)
(3)
(2)
K4 18BK/LB
SPLICE S114 (8W-30-18)
Z1 16BK
HEATED OXYGEN SENSOR (EXHAUST PIPE)
S119 8W-70-7
Z1 16BK
Z11 16BK WT
G104 8W-15-3
ENGINE DATA LINK CONNECTOR (8W-30-17)
K41 18BK DG
C139
11
12
5
GROUND
41 HEATED OXYGEN SENSOR SIGNAL
57 ASD RELAY OUTPUT
POWERTRAIN CONTROL MODULE
(LEFT SIDE OF DASH PANEL)
J958W-5

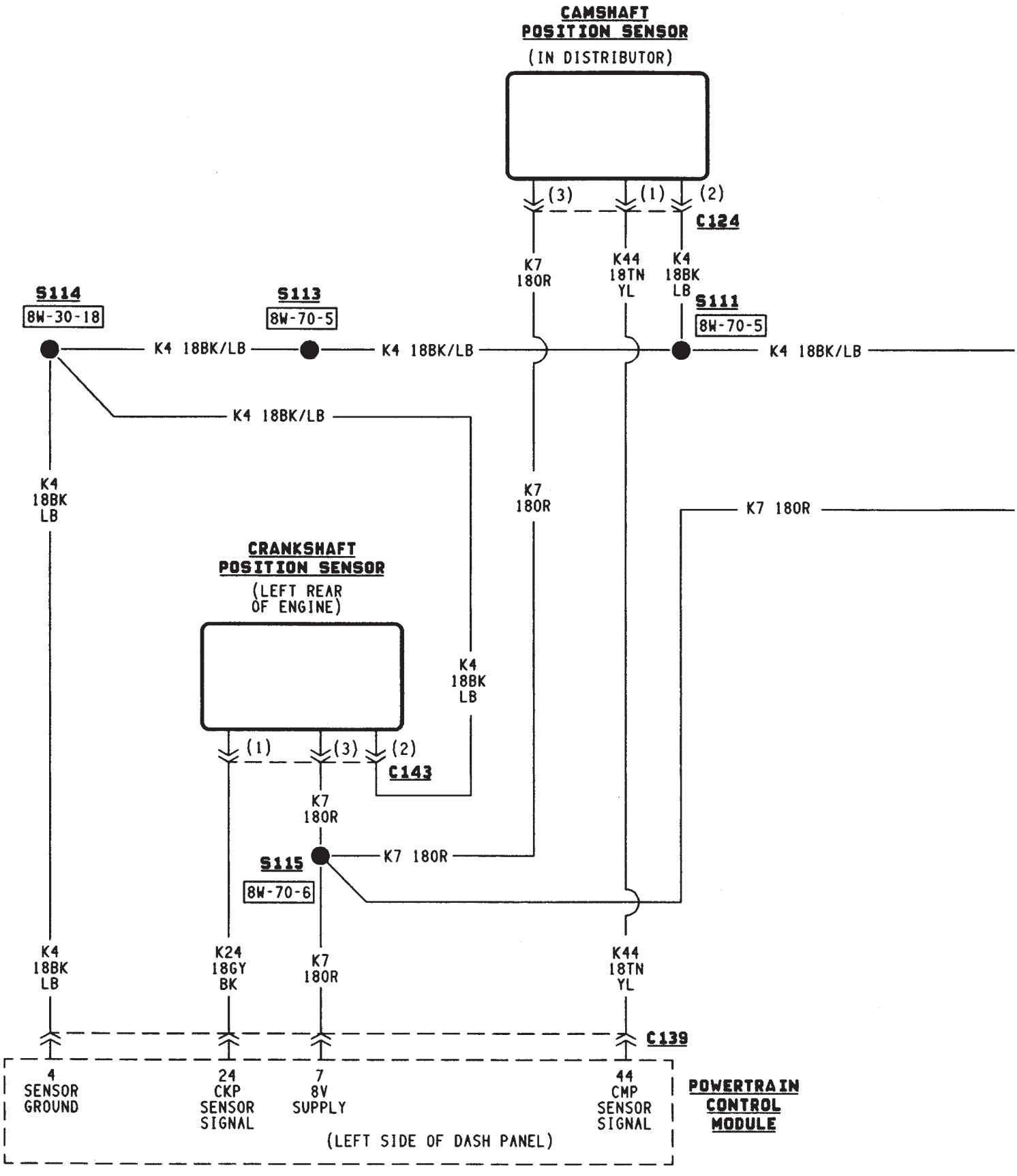
CAMSHAFT POSITION SENSOR
(IN DISTRIBUTOR)
(3)
(1)
(2)
C124
K7 180R
K44 18TN YL
K4 18BK LB
S114
8W-30-18
S113
8W-70-5
S111
8W-70-5
K4 18BK/LB
K4 18BK/LB
K4 18BK/LB
K4 18BK/LB
K4 18BK LB
K7 180R
K7 180R
CRANKSHAFT POSITION SENSOR
(LEFT REAR OF ENGINE)
K4 18BK LB
(1)
(3)
(2)
C143
K7 180R
S115
8W-70-6
K7 180R
K4 18BK LB
K24 18GY BK
K7 180R
K44 18TN YL
C139
4 SENSOR GROUND
24 CKP SENSOR SIGNAL
7 8V SUPPLY
44 CMP SENSOR SIGNAL
(LEFT SIDE OF DASH PANEL)
POWERTRAIN CONTROL MODULE

J958W-5

4.0L ENGINE

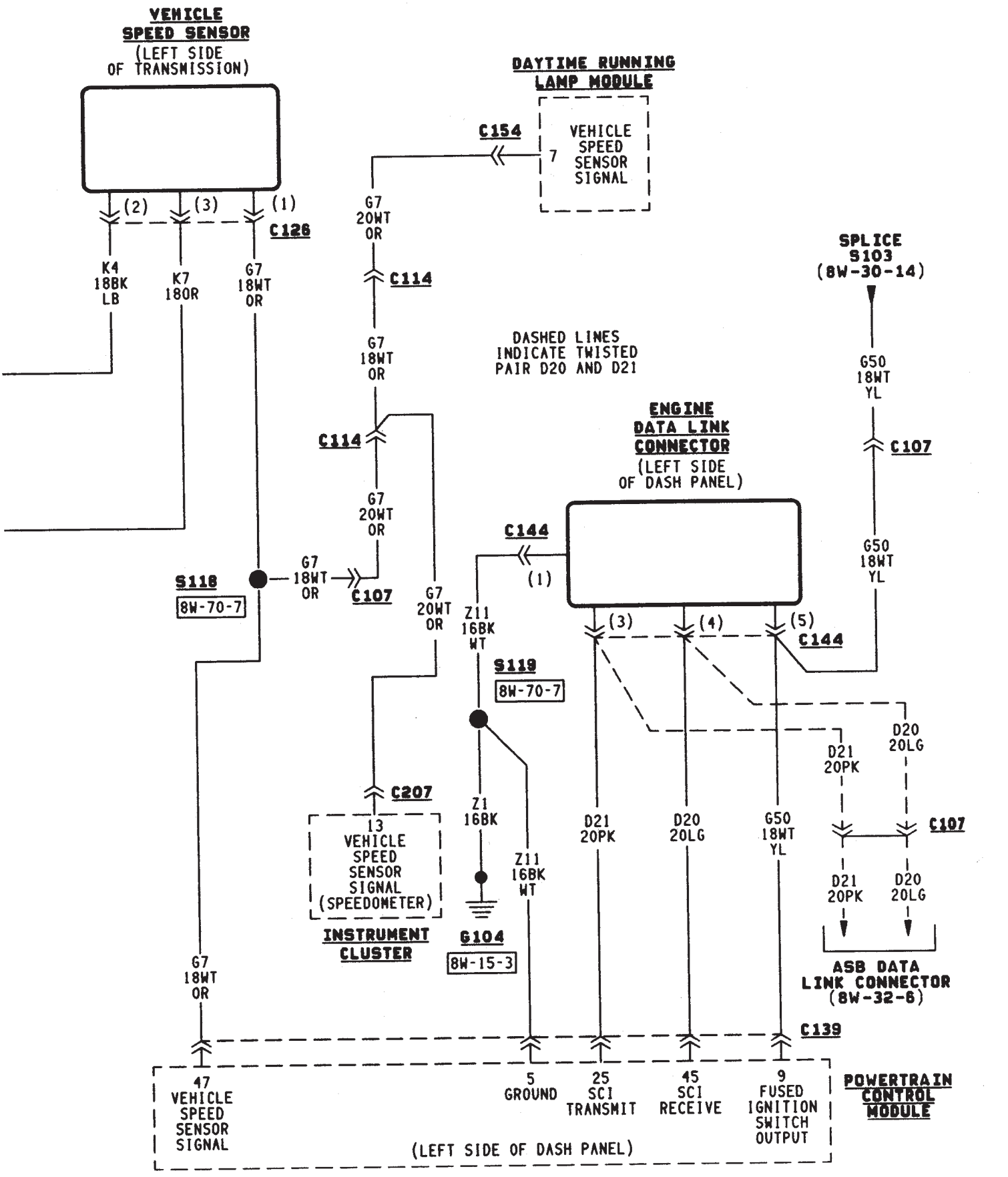

J958W-5

4.0L ENGINE

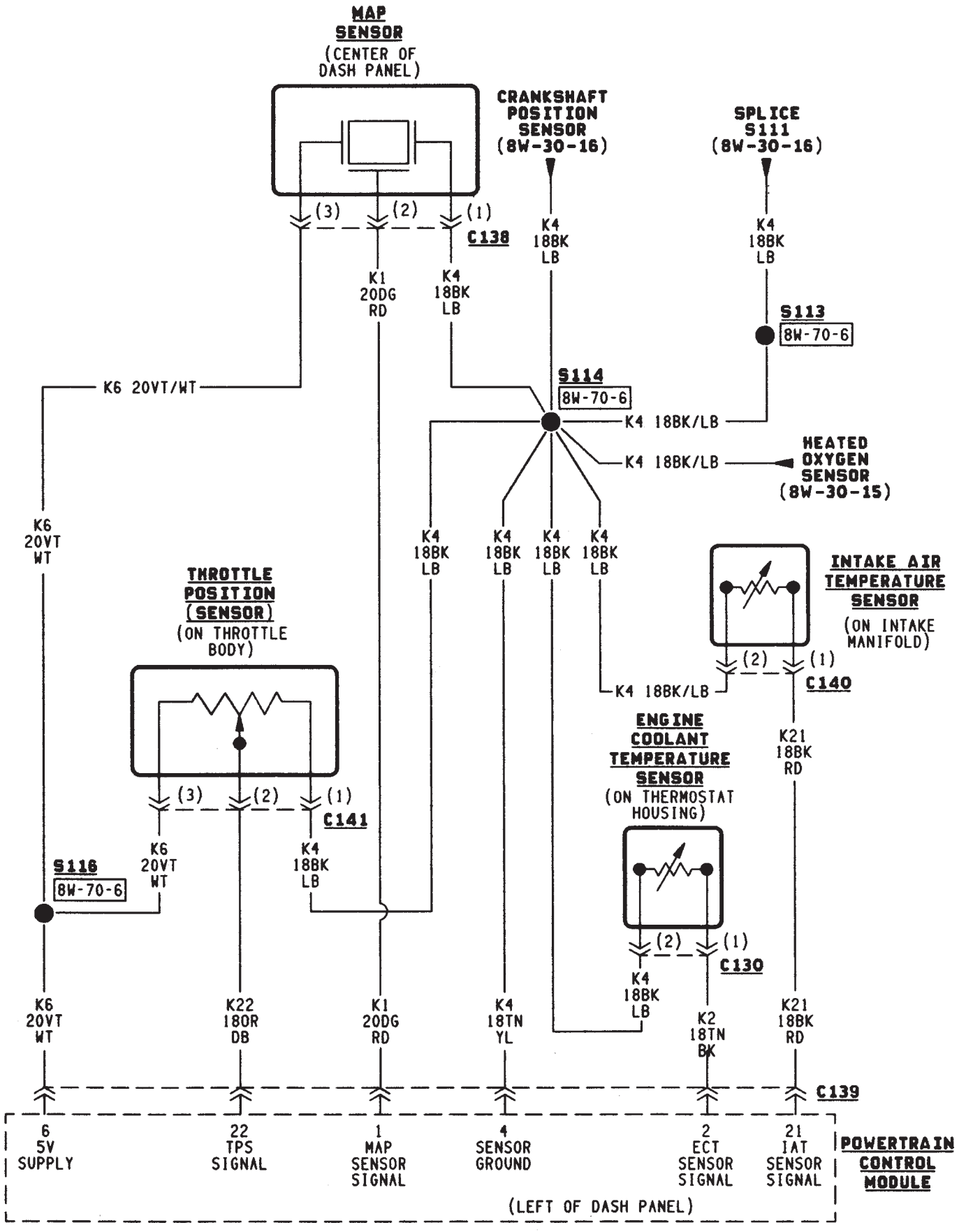

J958W-5

4.0L ENGINE

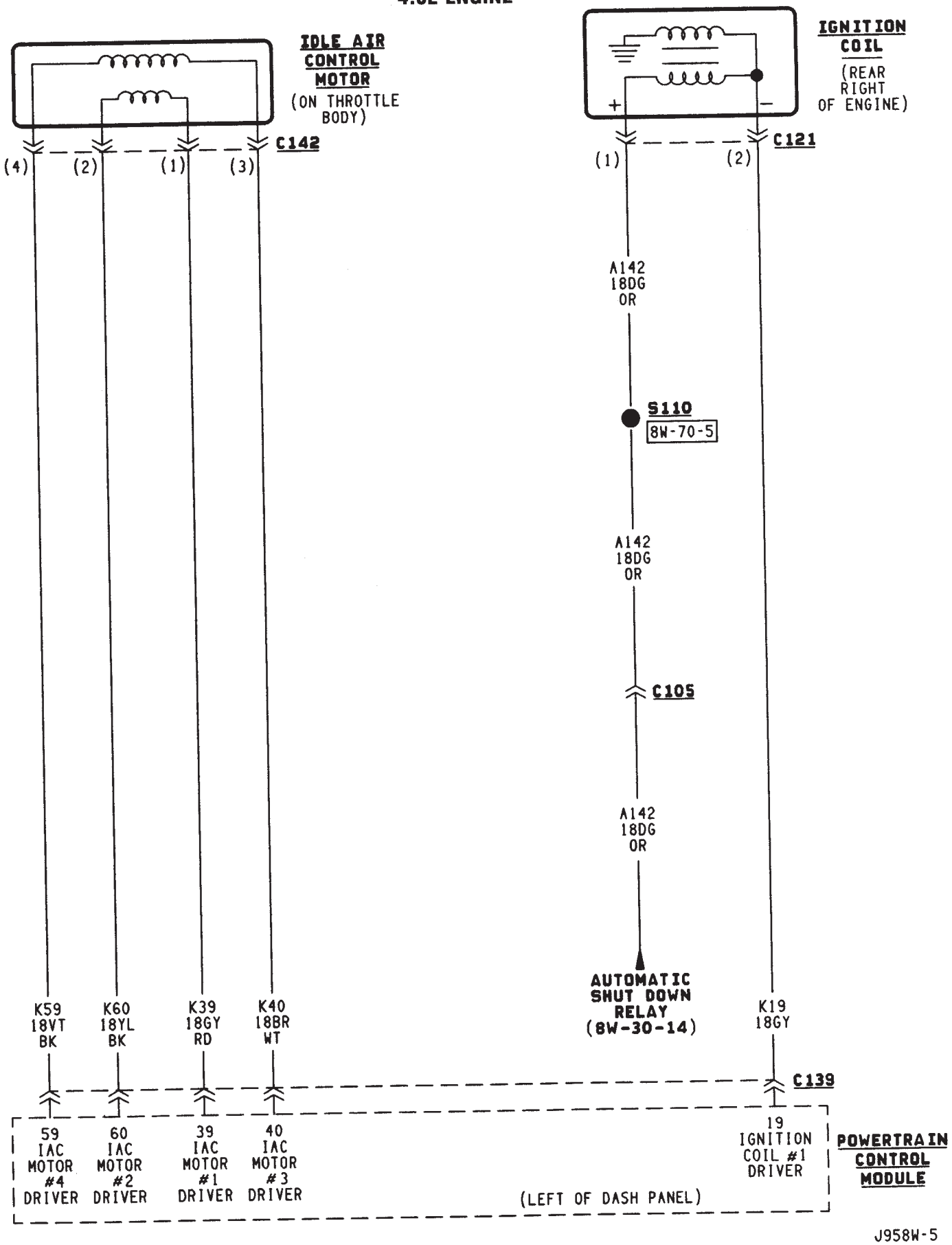
IDLE AIR CONTROL MOTOR
(ON THROTTLE BODY)
C142
(4)
(2)
(1)
(3)
IGNITION COIL
(REAR RIGHT OF ENGINE)
+
–
C121
(1)
(2)
A142
18DG
OR
S110
8W-70-5
A142
18DG
OR
C105
A142
18DG
OR
AUTOMATIC SHUT DOWN RELAY
(8W-30-14)
K59
18VT
BK
K60
18YL
BK
K39
18GY
RD
K40
18BR
WT
K19
18GY
C139
59
IAC
MOTOR
#4
DRIVER
60
IAC
MOTOR
#2
DRIVER
39
IAC
MOTOR
#1
DRIVER
40
IAC
MOTOR
#3
DRIVER
19
IGNITION
COIL #1
DRIVER
POWERTRAIN CONTROL MODULE
(LEFT OF DASH PANEL)
J958W-5

2.5L & 4.0L ENGINE

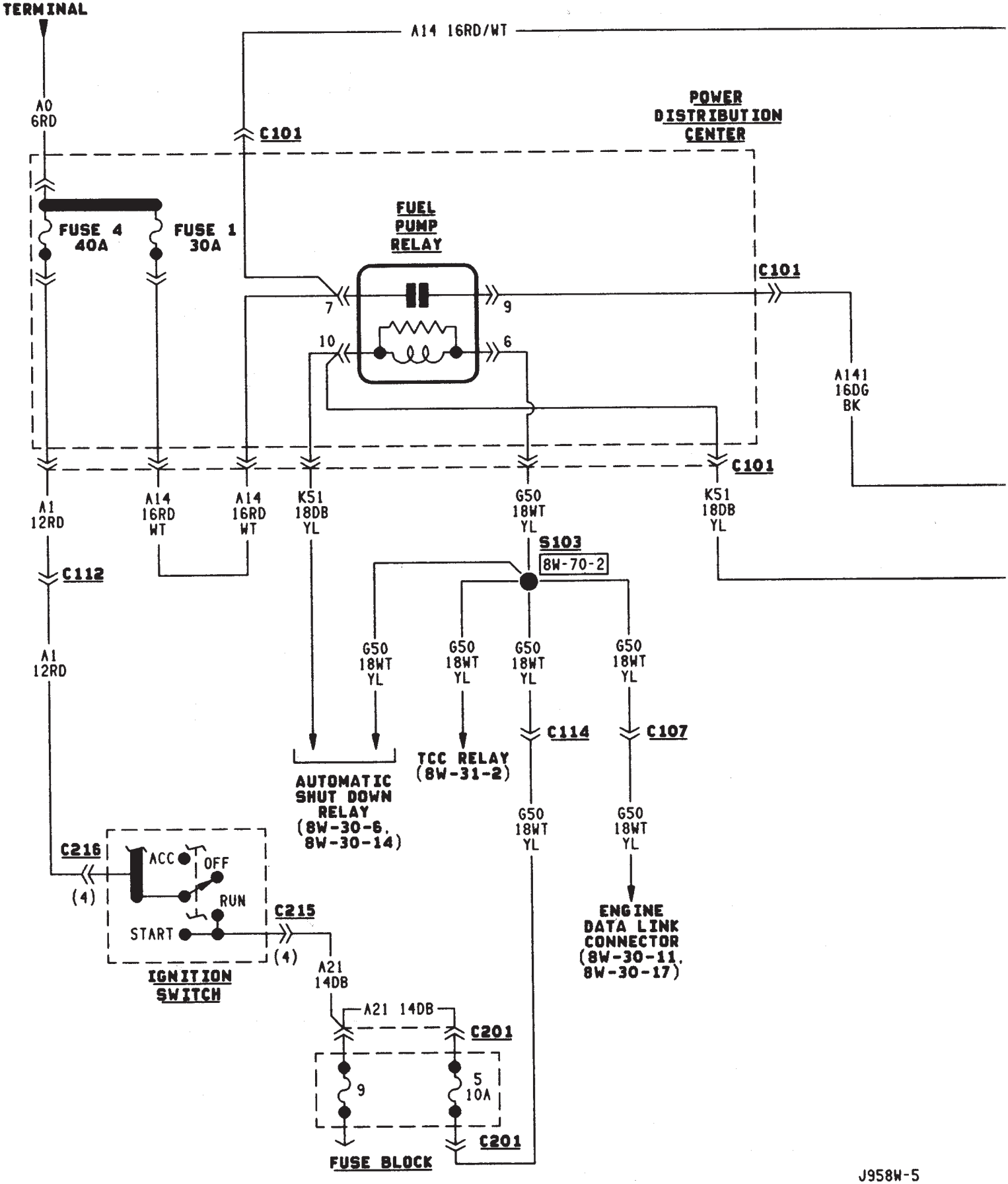

J958W-5

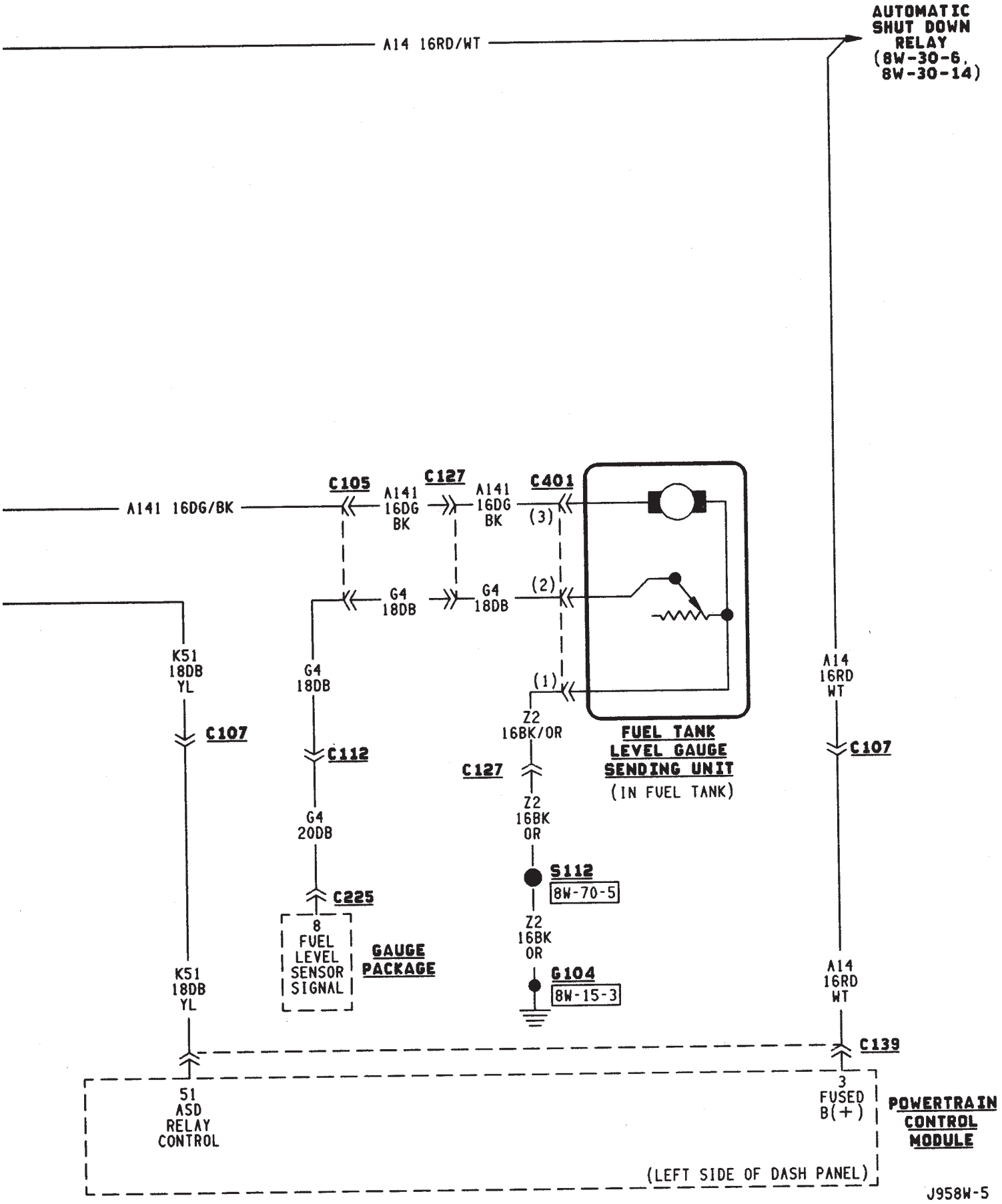
A14 16RD/WT
AUTOMATIC SHUT DOWN RELAY (8W-30-6, 8W-30-14)
A141 16DG/BK
C105
A141 16DG BK
C127
A141 16DG BK
C401
(3)
G4 18DB
G4 18DB
(2)
K51 18DB YL
G4 18DB
(1)
A14 16RD WT
C107
C112
Z2 16BK/OR
C127
FUEL TANK LEVEL GAUGE SENDING UNIT
(IN FUEL TANK)
C107
G4 20DB
Z2 16BK OR
S112
8W-70-5
C225
8 FUEL LEVEL SENSOR SIGNAL
GAUGE PACKAGE
Z2 16BK OR
G104
8W-15-3
K51 18DB YL
A14 16RD WT
C139
51 ASD RELAY CONTROL
3 FUSED B(+)
POWERTRAIN CONTROL MODULE
(LEFT SIDE OF DASH PANEL)
J958W-5

TRANSMISSION CONTROLS

TORQUE CONVERTER CLUTCH (TCC) SOLENOID AND RELAY

The TCC solenoid is only used on three-speed automatic transmissions. The Powertrain Control Module (PCM) operates the TCC solenoid by energizing the TCC relay.

Circuit G50 from fuse 5 in the Power Distribution Center (PDC) supplies voltage to the coil side of the TCC relay. When the PCM provides a ground path on circuit K54, the relay contacts close.

When the relay contacts close, they connect circuit A14 from fuse 1 in the PDC with circuit T22. Circuit T22 supplies battery voltage to the case grounded TCC solenoid. Circuit K54 connects to PCM cavity 54.

HELPFUL INFORMATION

- In the RUN or START position, the ignition switch connects circuit A1 from fuse 4 in the PDC to circuit A21.
- Circuit A21 powers fuse 5 in the fuse block.
- Circuit G50 also connects to the engine data link connector, Automatic Shut Down (ASD) relay, and fuel pump relay.

UPSHIFT LAMP

On vehicles equipped with a manual transmission, the PCM grounds the up-shift lamp on circuit K54. Circuit K54 connects to cavity 54 of the PCM.

DIAGRAM INDEX

Component	Page
Fuse 1 (PDC)	8W-31-2
Fuse 4 (PDC)	8W-31-2
Fuse 5 (Fuse Block)	8W-31-2
Ignition Switch	8W-31-2
Instrument Cluster	8W-31-2
Powertrain Control Module (PCM)	8W-31-2
TCC Relay	8W-31-2
TCC Solenoid	8W-31-2

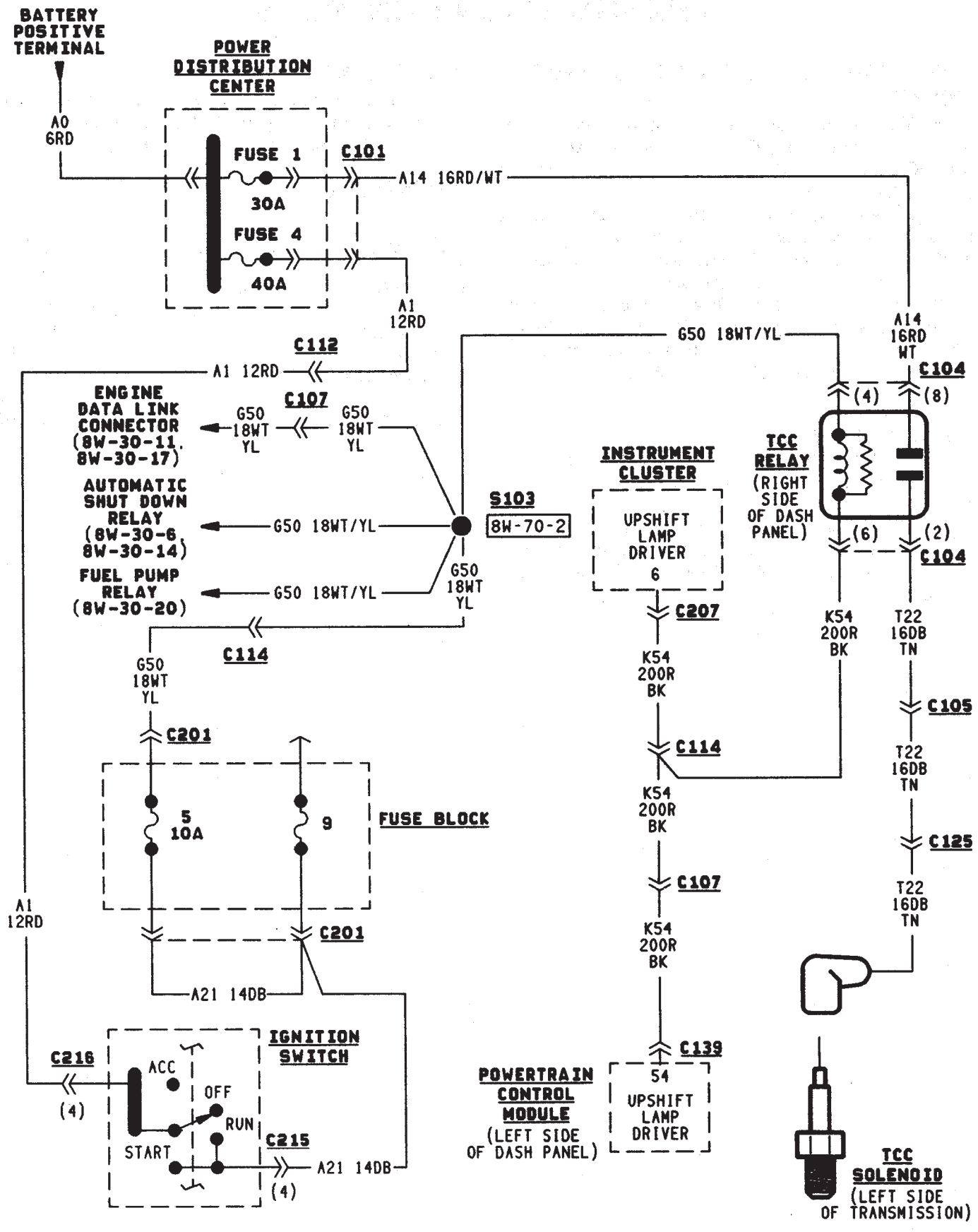
BATTERY POSITIVE TERMINAL
A0 6RD
POWER DISTRIBUTION CENTER
FUSE 1
30A
FUSE 4
40A
C101
A14 16RD/WT
A1 12RD
C112
A1 12RD
G50 18WT/YL
A14 16RD WT
C104
(4)
(8)
ENGINE DATA LINK CONNECTOR (8W-30-11, 8W-30-17)
C107
G50 18WT YL
G50 18WT YL
AUTOMATIC SHUT DOWN RELAY (8W-30-6, 8W-30-14)
G50 18WT/YL
S103
8W-70-2
FUEL PUMP RELAY (8W-30-20)
G50 18WT/YL
G50 18WT YL
INSTRUMENT CLUSTER
UPSHIFT LAMP DRIVER
6
TCC RELAY (RIGHT SIDE OF DASH PANEL)
(6)
(2)
C104
C207
K54 200R BK
T22 16DB TN
C114
G50 18WT YL
C201
K54 200R BK
C105
T22 16DB TN
5 10A
9
FUSE BLOCK
C114
K54 200R BK
C125
T22 16DB TN
A1 12RD
C201
C107
K54 200R BK
A21 14DB
C216
IGNITION SWITCH
ACC
OFF
RUN
START
C215
A21 14DB
(4)
(4)
C139
POWERTRAIN CONTROL MODULE (LEFT SIDE OF DASH PANEL)
54
UPSHIFT LAMP DRIVER
TCC SOLENOID (LEFT SIDE OF TRANSMISSION)

J958W-5

ANTI-LOCK BRAKES

GENERAL INFORMATION

Three fuses supply power for the Anti-Lock Brake System (ABS); fuses 9 and 10 in the PDC and fuse 13 in the fuse block. Fuses 9 and 10 in the Power Distribution Center (PDC) are connected directly to battery voltage and are HOT all times. Fuse 13 is HOT when the ignition switch is the RUN position.

In the RUN position, the ignition switch connects circuit A1 from fuse 4 in the PDC with circuit A22. Circuit A22 connects to a bus bar in the fuse block. The bus bar feeds circuit F15 through fuse 13. Fuse 13 is a 2 amp fuse.

Circuit F15 splices to the coil side of the ABS power relay and cavity 53 of the ABS control module.

Circuit Z1 provides ground for the ABS control module. Circuit Z1 connects to cavities 1 and 19 of the ABS control module.

Refer to group 5, Brakes for operational descriptions of ABS system components.

WHEEL SPEED SENSORS

The all wheel anti-lock system uses four wheel speed sensors; one for each wheel. Each sensor converts wheel speed into an electrical signal that it transmits to the ABS control module. A pair of twisted wires connect to each sensor to provide signals to the ABS control module.

Circuits B6 and B7 provide signals to ABS control module from the right front wheel speed sensor. Circuit B6, which provides the LOW signal, connects to cavity 29 of the ABS control module. Circuit B7 connects to cavity 47 of the module and provides the HIGH signal.

Circuits B8 and B9 provide signals to ABS control module from the left front wheel speed sensor. Circuit B8, which provides the LOW signal, connects to cavity 30 of the ABS control module. Circuit B9 connects to cavity 48 of the module and provides the HIGH signal.

Circuits B1 and B2 provide signals to ABS control module from the right rear wheel speed sensor. Circuit B1 which provides the LOW signal, connects to cavity 27 of the ABS control module. Circuit B2 connects to cavity 45 of the module and provides the HIGH signal.

Circuits B4 and B3 provide signals to ABS control module from the left rear wheel speed sensor. Circuit B3, which provides the LOW signal, connects to cavity 28 of the ABS control module. Circuit B4 connects to cavity 46 of the module and provides the HIGH signal.

ACCELERATION SWITCH

During four-wheel drive operation, the acceleration switch provides deceleration data to the ABS control module. Refer to Group 5, Brakes for additional information.

Circuits B21, B22, and B23 connect the acceleration sensor to the ABS control module. Circuits B21 and B22 provide switch states while circuit B23 provides ground. At the ABS control module circuit B21 connects to cavity 25, circuit B22 connects to cavity 43 and circuit B23 connects to cavity 26.

ABS POWER RELAY

The ABS power relay is located in the Power Distribution Center (PDC). When the ABS module grounds the ABS power relay on circuit B20, the relay switches to connect circuit B15 and circuit A20 from PDC fuse 10. Circuit F15 from fuse 13 in the fuse block splices to feed the coil side of the ABS power relay. Circuit B20 connects to cavity 34 of the ABS control module.

Circuit B15 is double crimped at the ABS power relay. One branch of circuit B15 supplies power to the coil side of the ABS pump motor relay. The other branch of circuit B15 splices to cavities 3 and 33 of the ABS control module and to the hydraulic control unit.

ABS PUMP MOTOR RELAY

The ABS pump motor relay in the Power Distribution Center (PDC) supplies voltage to the ABS pump motor. When the ABS power relay energizes, circuit B15 supplies battery voltage to the coil side of the ABS pump motor relay. The ABS control module provides ground for the relay on circuit B116. Circuit B116 connects to cavity 15 of the ABS control module.

When the ABS pump motor energizes, it connects circuit A10 from PDC fuse 9 to circuit B25. Circuit B25 supplies battery voltage to the pump motor. Circuit Z12 provides ground for the pump motor.

PUMP MOTOR SPEED SENSOR

The input from the pump motor speed sensor tells the ABS control module that the pump is operating. Circuit B17 and B16 from the control module connect to the speed sensor.

BRAKE PEDAL TRAVEL SENSOR

The brake pedal travel sensor provides the ABS control module with data regarding brake pedal position. The sensor is a variable resistor that the ABS

module provides voltage to and receives input from. Circuit B210 from cavity 41 of the ABS control module provides voltage to the sensor. Circuit B258 carries the signal from the sensor to cavity 16 of the ABS module.

BRAKE SWITCH INPUT

Circuit L50 from the stop lamp provides the brake switch input to the ABS control module. When the brake pedal is pressed, the stop lamp switch closes to supply battery voltage from circuit F32 to circuit L50. Circuit L50 connects to cavity 32 of the ABS control module. Circuit F32 originates at fuse 3 in the fuse block.

Circuit A6 from Power Distribution Center (PDC) fuse 3 supplies voltage to the fuse block for circuit F32.

HYDRAULIC CONTROL UNIT

When the ABS power relay energizes, two branches of circuit B15 splice to supply voltage to the isolation and decay solenoids in the hydraulic control unit. The hydraulic control unit contains three separate isolation solenoids and three separate decay solenoids. The ABS control module activates the decay and isolation solenoids by providing separate ground paths for each.

The ABS module provides a ground path for the rear isolation solenoid on circuit B251. Circuit B251 connects to cavity 54 of the ABS control module.

For the right front isolation solenoid, the ABS module provides a ground path on circuit B249. Circuit B249 connects to cavity 38 of the ABS control module.

On circuit B245, the ABS module provides ground for the left front isolation solenoid. Circuit B245 connects to cavity 20 of the ABS control module.

The ABS module provides a ground path for the rear decay solenoid on circuit B254. Circuit B254 connects to cavity 36 of the ABS control module.

For the right front decay solenoid, the ABS module provides a ground path on circuit B248. Circuit B248 connects to cavity 21 of the ABS control module.

On circuit B243, the ABS module provides ground for the left decay solenoid. Circuit B243 connects to cavity 2 of the ABS control module.

ABS WARNING LAMP

Circuit G5 provides power for the ABS warning lamp at the instrument cluster. Ground for the ABS warning lamp is provided by either the ABS control module or by the ABS power relay when the relay is not energized. The ABS control module illuminates the lamp by providing ground on circuit G19.

Circuit G19 splices to connect to circuit B15 through a diode. When the ABS power relay is not energized, it connects circuit B15 to circuit Z12. The ground path for the warning lamp is through the diode to circuit B15, through the ABS power relay to ground on circuit Z12.

The diode between circuit G19 and B15 prevents voltage from flowing to the ABS control module when the ABS power relay switches to supply power on circuit B15.

DATA LINK CONNECTOR

Circuit D11 from cavity 23 of the ABS control module receives data from the DRB scan tool through the data link connector. The ABS control module transmits data to the scan tool through the connector on circuit D12. Circuit D12 originates at cavity 42 of the ABS control module.

Through the data link connector, circuit Z12 provides ground for the DRB scan tool. Circuit Z12 terminates at the right rear of the dash panel.

Circuit A4 from fuse 8 in the Power Distribution Center (PDC) supplies power to fuse 16 in the PDC. Fuse 16 powers circuit M1 which supplies battery voltage to the scan tool through the diagnostic connector.

HELPFUL INFORMATION

- Check fuses 4, 9 and 10 in the PDC
- Check fuse 13 in the fuse block

DIAGRAM INDEX

Component	Page
ABS Power Relay	8W-32-4
ABS Pump Motor/Sensor	8W-32-5
ABS Warning Lamp	8W-32-4
ABS Control Module	8W-32-3 thru 7
ABS Pump Motor Relay	8W-32-5
Brake Pedal Travel Sensor	8W-32-6
Data Link Connector	8W-32-6
Fuse 1 Fuse Block	8W-32-4
Fuse 3 Fuse Block	8W-32-6
Fuse 3 (PDC)	8W-32-6
Fuse 4 (PDC)	8W-32-4
Fuse 8 (PDC)	8W-32-6
Fuse 10 (PDC)	8W-32-4
Fuse 12 Fuse Block	8W-32-4
Fuse 12 (PDC)	8W-32-6
Fuse 13 (PDC)	8W-32-4
Hydraulic Actuation Unit	8W-32-3
Ignition Switch	8W-32-4
Powertrain Control Module (PCM)	8W-32-6
Stop Lamp Switch	8W-32-6
Wheel Speed Sensors	8W-32-7

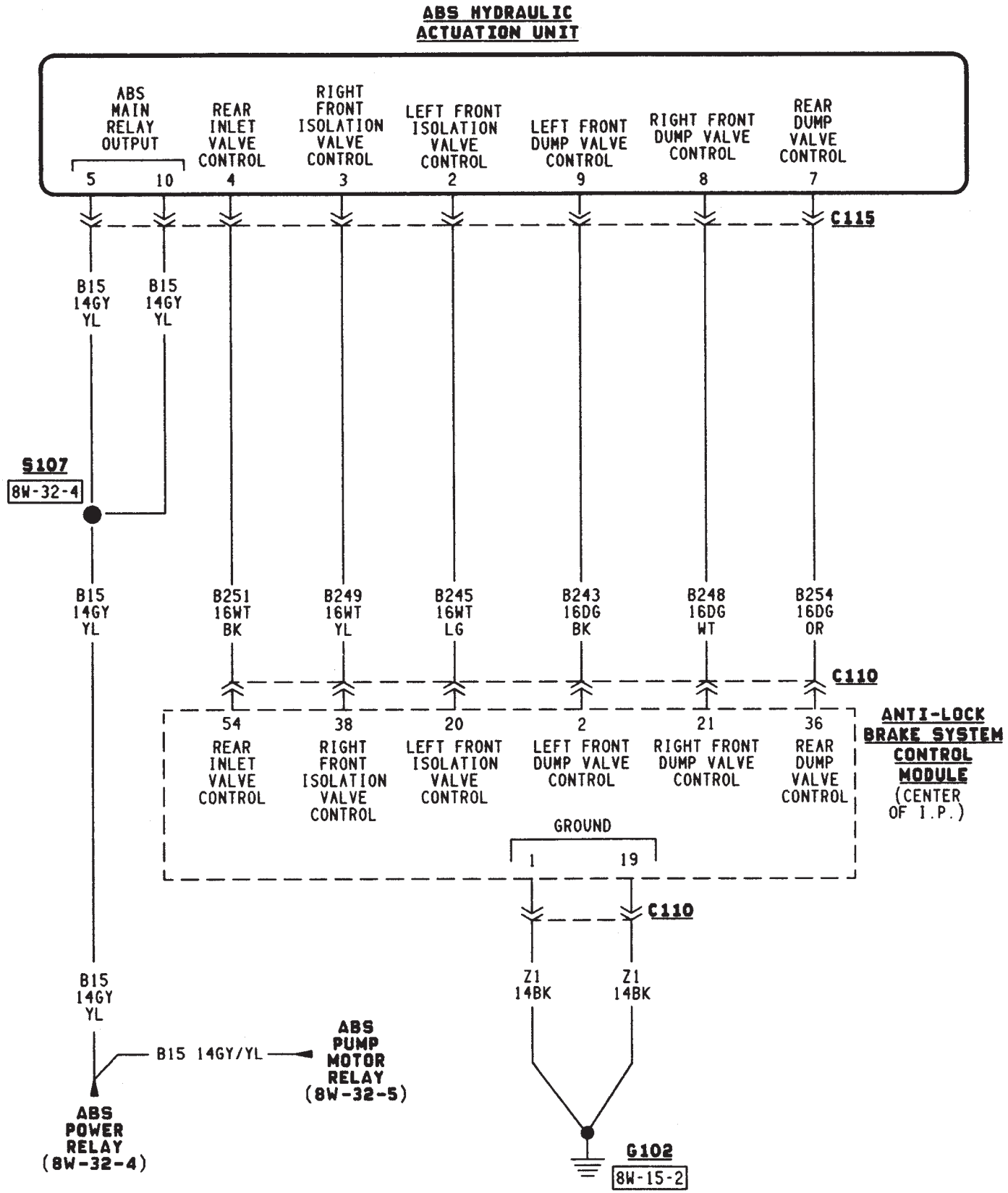
ABS HYDRAULIC ACTUATION UNIT
ABS MAIN RELAY OUTPUT
5
10
REAR INLET VALVE CONTROL
4
RIGHT FRONT ISOLATION VALVE CONTROL
3
LEFT FRONT ISOLATION VALVE CONTROL
2
LEFT FRONT DUMP VALVE CONTROL
9
RIGHT FRONT DUMP VALVE CONTROL
8
REAR DUMP VALVE CONTROL
7
C115
B15 14GY YL
B15 14GY YL
S107
8W-32-4
B15 14GY YL
B251 16WT BK
B249 16WT YL
B245 16WT LG
B243 16DG BK
B248 16DG WT
B254 16DG OR
C110
54
REAR INLET VALVE CONTROL
38
RIGHT FRONT ISOLATION VALVE CONTROL
20
LEFT FRONT ISOLATION VALVE CONTROL
2
LEFT FRONT DUMP VALVE CONTROL
21
RIGHT FRONT DUMP VALVE CONTROL
36
REAR DUMP VALVE CONTROL
ANTI-LOCK BRAKE SYSTEM CONTROL MODULE
(CENTER OF I.P.)
GROUND
1
19
C110
Z1 14BK
Z1 14BK
B15 14GY YL
B15 14GY/YL
ABS PUMP MOTOR RELAY (8W-32-5)
ABS POWER RELAY (8W-32-4)
G102
8W-15-2

J958W-5

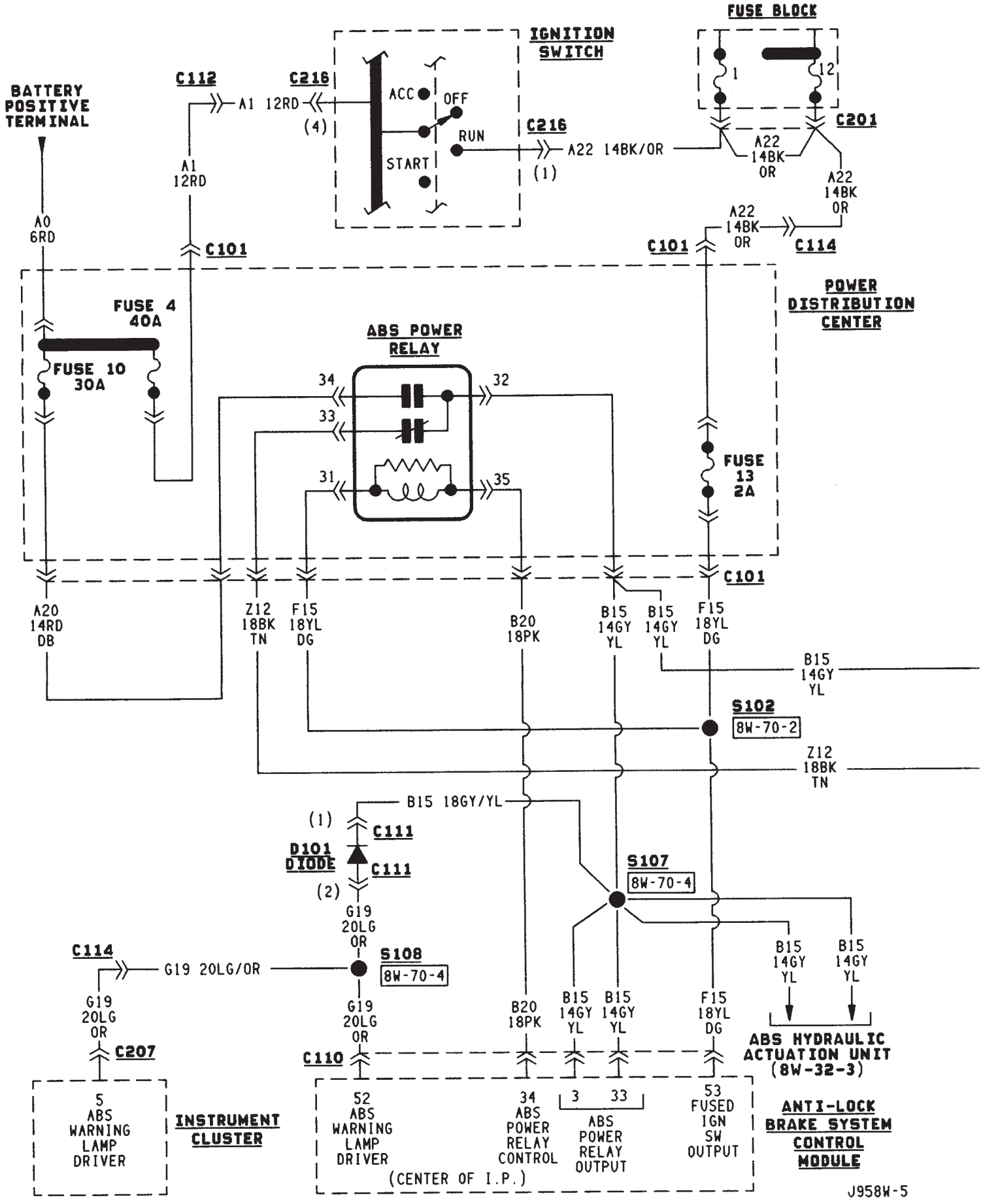
BATTERY POSITIVE TERMINAL
A0 6RD
C112
A1 12RD
C216
(4)
A1 12RD
C101
IGNITION SWITCH
ACC
OFF
RUN
START
C216
A22 14BK/OR
(1)
FUSE BLOCK
1
12
C201
A22 14BK OR
A22 14BK OR
A22 14BK OR
C114
C101
POWER DISTRIBUTION CENTER
FUSE 4 40A
FUSE 10 30A
ABS POWER RELAY
34
33
31
32
35
FUSE 13 2A
C101
A20 14RD DB
Z12 18BK TN
F15 18YL DG
B20 18PK
B15 14GY YL
B15 14GY YL
F15 18YL DG
B15 14GY YL
S102
8W-70-2
Z12 18BK TN
B15 18GY/YL
(1)
C111
D101 DIODE
C111
(2)
G19 20LG OR
S107
8W-70-4
C114
G19 20LG/OR
S108
8W-70-4
G19 20LG OR
G19 20LG OR
C207
C110
B20 18PK
B15 14GY YL
B15 14GY YL
F15 18YL DG
B15 14GY YL
B15 14GY YL
ABS HYDRAULIC ACTUATION UNIT (8W-32-3)
5 ABS WARNING LAMP DRIVER
INSTRUMENT CLUSTER
52 ABS WARNING LAMP DRIVER
34 ABS POWER RELAY CONTROL
3 33 ABS POWER RELAY OUTPUT
53 FUSED IGN SW OUTPUT
(CENTER OF I.P.)
ANTI-LOCK BRAKE SYSTEM CONTROL MODULE
J958W-5

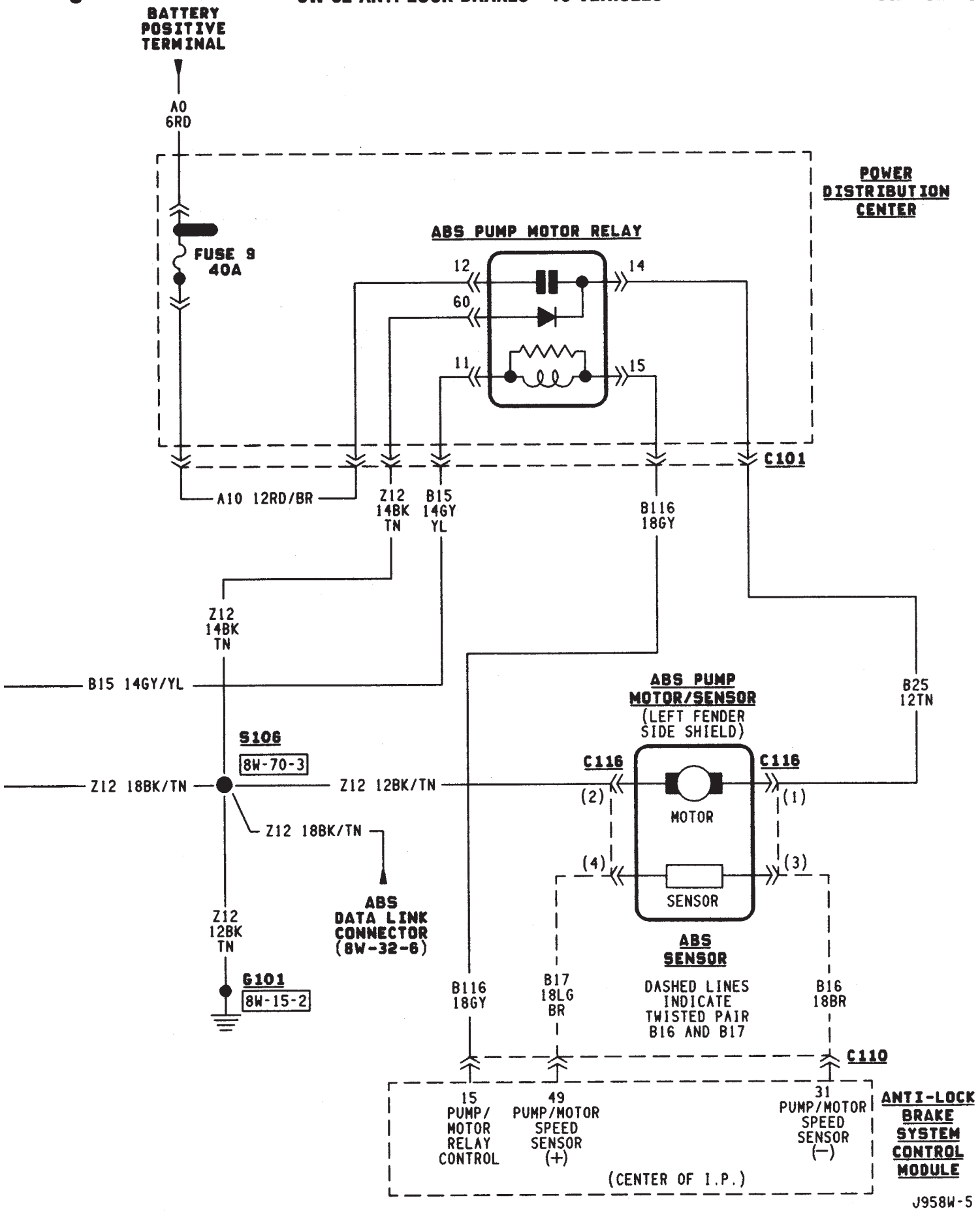
BATTERY POSITIVE TERMINAL
A0 6RD
POWER DISTRIBUTION CENTER
FUSE 9 40A
ABS PUMP MOTOR RELAY
12
14
60
11
15
C101
A10 12RD/BR
Z12 14BK TN
B15 14GY YL
B116 18GY
Z12 14BK TN
B15 14GY/YL
B25 12TN
ABS PUMP MOTOR/SENSOR (LEFT FENDER SIDE SHIELD)
C116
C116
(2)
(1)
MOTOR
(4)
(3)
SENSOR
S106
8W-70-3
Z12 18BK/TN
Z12 12BK/TN
Z12 18BK/TN
ABS DATA LINK CONNECTOR (8W-32-6)
Z12 12BK TN
G101
8W-15-2
ABS SENSOR
DASHED LINES INDICATE TWISTED PAIR B16 AND B17
B116 18GY
B17 18LG BR
B16 18BR
C110
15 PUMP/ MOTOR RELAY CONTROL
49 PUMP/MOTOR SPEED SENSOR (+)
31 PUMP/MOTOR SPEED SENSOR (−)
(CENTER OF I.P.)
ANTI-LOCK BRAKE SYSTEM CONTROL MODULE
J958W-5

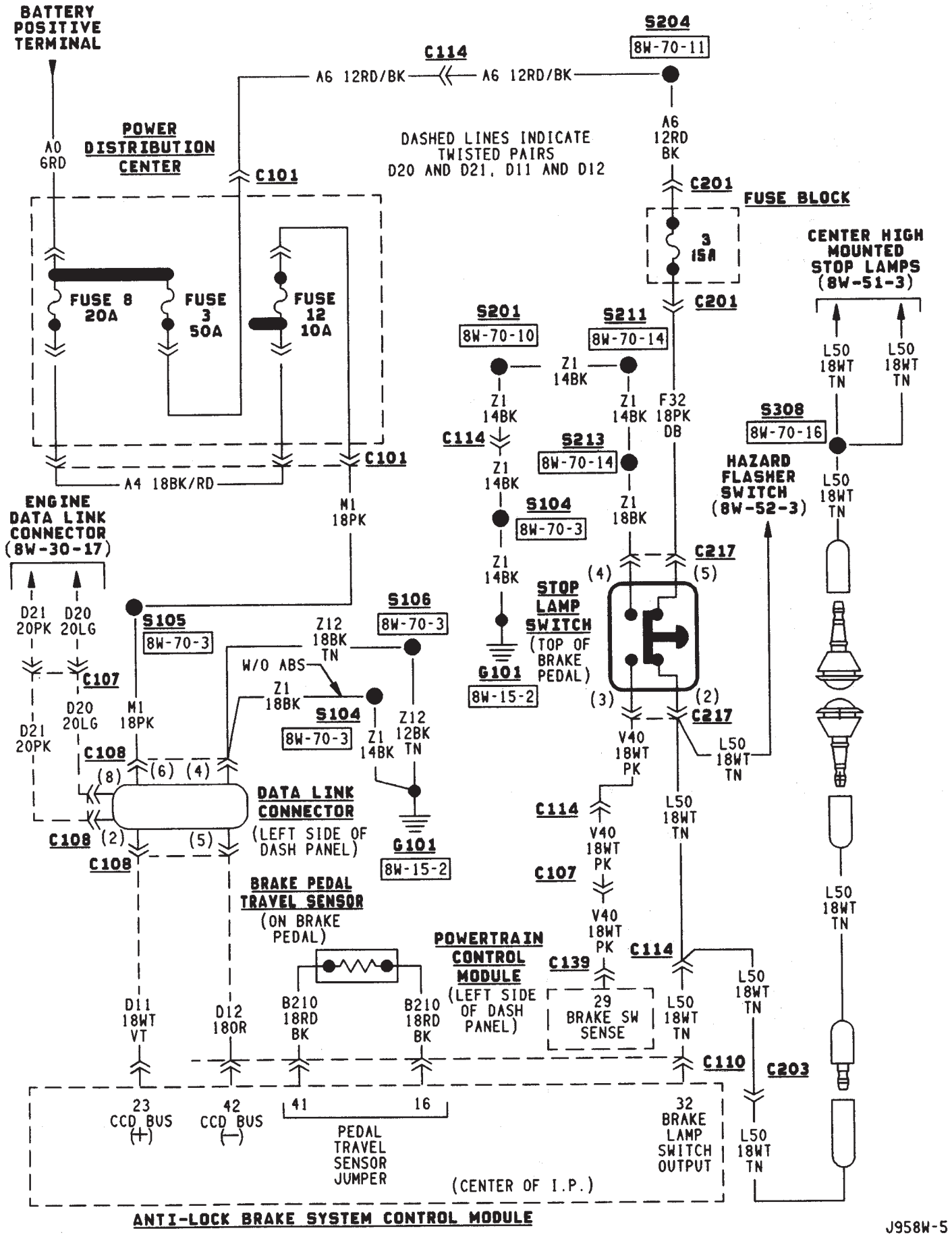
BATTERY POSITIVE TERMINAL
A0 6RD
POWER DISTRIBUTION CENTER
C101
FUSE 8 20A
FUSE 3 50A
FUSE 12 10A
A4 18BK/RD
M1 18PK
C114
A6 12RD/BK
A6 12RD/BK
S204
8W-70-11
DASHED LINES INDICATE TWISTED PAIRS D20 AND D21, D11 AND D12
A6 12RD BK
C201
FUSE BLOCK
3 15A
C201
CENTER HIGH MOUNTED STOP LAMPS (8W-51-3)
L50 18WT TN
L50 18WT TN
S201
8W-70-10
S211
8W-70-14
Z1 14BK
Z1 14BK
Z1 14BK
F32 18PK DB
C114
Z1 14BK
S213
8W-70-14
S308
8W-70-16
HAZARD FLASHER SWITCH (8W-52-3)
L50 18WT TN
S104
8W-70-3
Z1 18BK
C217
(4)
(5)
Z1 14BK
STOP LAMP SWITCH (TOP OF BRAKE PEDAL)
G101
8W-15-2
(3)
(2)
C217
V40 18WT PK
L50 18WT TN
ENGINE DATA LINK CONNECTOR (8W-30-17)
D21 20PK
D20 20LG
S105
8W-70-3
S106
8W-70-3
Z12 18BK TN
W/O ABS
Z1 18BK
C107
D20 20LG
M1 18PK
D21 20PK
S104
8W-70-3
Z1 14BK
Z12 12BK TN
C108
(8)
(6)
(4)
DATA LINK CONNECTOR (LEFT SIDE OF DASH PANEL)
C108
(2)
(5)
C108
G101
8W-15-2
C114
V40 18WT PK
L50 18WT TN
C107
V40 18WT PK
BRAKE PEDAL TRAVEL SENSOR (ON BRAKE PEDAL)
POWERTRAIN CONTROL MODULE (LEFT SIDE OF DASH PANEL)
C139
C114
L50 18WT TN
29 BRAKE SW SENSE
L50 18WT TN
L50 18WT TN
D11 18WT VT
D12 180R
B210 18RD BK
B210 18RD BK
C110
C203
23 CCD BUS (+)
42 CCD BUS (-)
41
16
PEDAL TRAVEL SENSOR JUMPER
32 BRAKE LAMP SWITCH OUTPUT
L50 18WT TN
(CENTER OF I.P.)
ANTI-LOCK BRAKE SYSTEM CONTROL MODULE

J958W-5

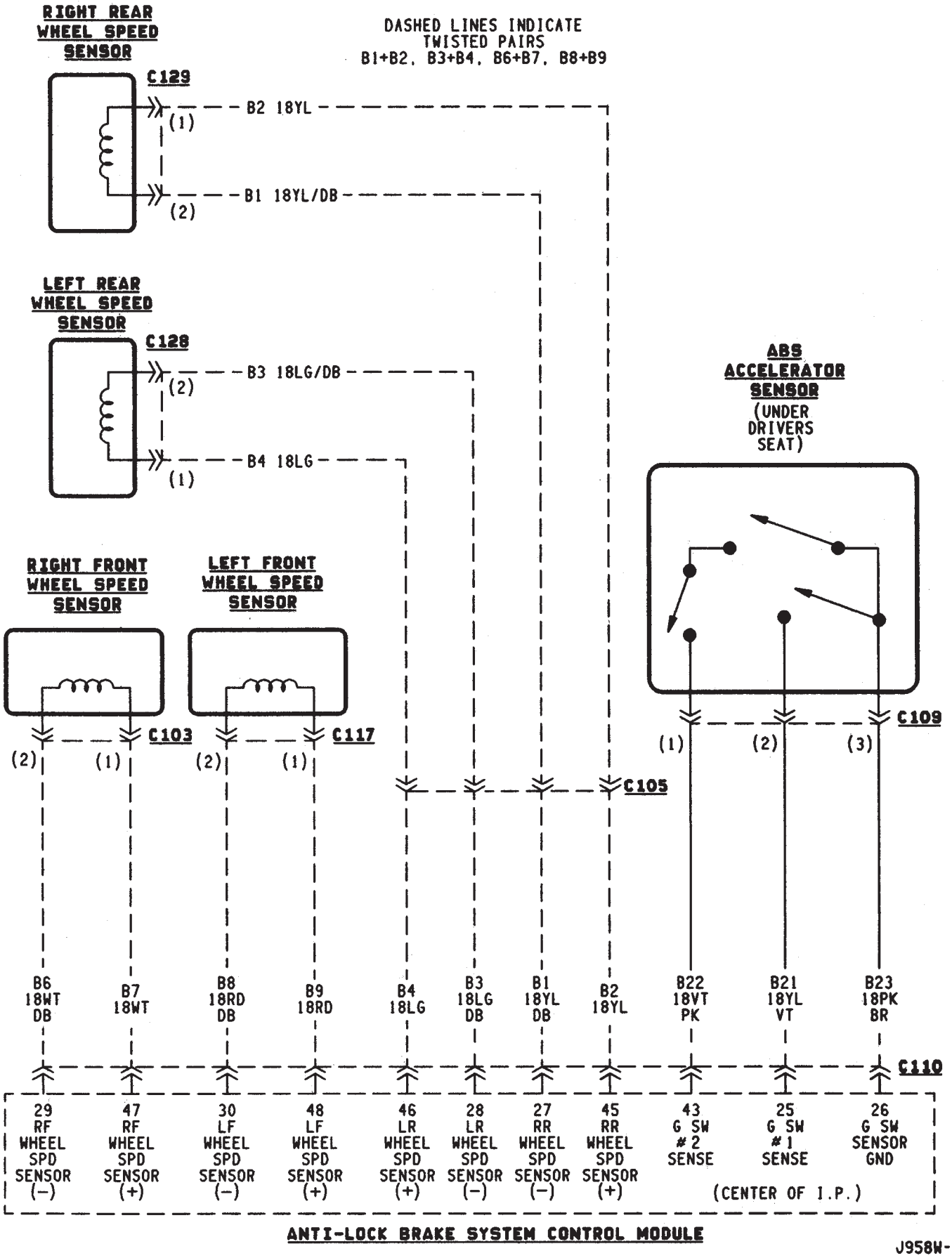
RIGHT REAR WHEEL SPEED SENSOR
DASHED LINES INDICATE TWISTED PAIRS B1+B2, B3+B4, B6+B7, B8+B9
C129
(1)
(2)
B2 18YL
B1 18YL/DB
LEFT REAR WHEEL SPEED SENSOR
C128
(2)
(1)
B3 18LG/DB
B4 18LG
ABS ACCELERATOR SENSOR (UNDER DRIVERS SEAT)
RIGHT FRONT WHEEL SPEED SENSOR
LEFT FRONT WHEEL SPEED SENSOR
C103
C117
C105
C109
C110
B6 18WT DB
B7 18WT
B8 18RD DB
B9 18RD
B4 18LG
B3 18LG DB
B1 18YL DB
B2 18YL
B22 18VT PK
B21 18YL VT
B23 18PK BR
29 RF WHEEL SPD SENSOR (−)
47 RF WHEEL SPD SENSOR (+)
30 LF WHEEL SPD SENSOR (−)
48 LF WHEEL SPD SENSOR (+)
46 LR WHEEL SPD SENSOR (+)
28 LR WHEEL SPD SENSOR (−)
27 RR WHEEL SPD SENSOR (−)
45 RR WHEEL SPD SENSOR (+)
43 G SW #2 SENSE
25 G SW #1 SENSE
26 G SW SENSOR GND
(CENTER OF I.P.)
ANTI-LOCK BRAKE SYSTEM CONTROL MODULE
J958W-5

INSTRUMENT CLUSTER

INSTRUMENT CLUSTER

The instrument cluster contains the gauges and warning lamps. All gauges have magnetic movements.

When the ignition switch is in either the START or RUN position, circuit A1 from fuse 4 in the Power Distribution Center (PDC) connects to circuit A21.

Circuit A21 powers fuse 9 in the fuse block. Fuse 9 powers circuit G5. One branch of circuit G5 connects directly to the combination buzzer. The other branch of circuit G5 splices to power the gauges, speedometer, tachometer, voltmeter, indicator lamps, and warning lamps in the instrument cluster.

When the parking lamps or headlamps are ON, the headlamp switch connects circuit F33 to circuit L7. Circuit L7 splices to the dimmer switch. Circuit E1 from the dimmer switch powers fuse 10 in the fuse block when the parking lamps or headlamps are ON. Circuit E2 from fuse 10 in the fuse block feeds the illumination lamps in the instrument cluster.

Circuit Z1 provides ground the instrument cluster illumination lamps, gauges and warning lamps.

HELPFUL INFORMATION

- Circuit G5 also powers the heated rear window, A/C compressor clutch relay. On Canadian vehicles, circuit G5 powers the Daytime Running Lamps (DRL) module.
- Circuit F33 originates at fuse 8 in the fuse block. Circuit A6 from fuse 3 in the PDC powers fuse 8 in the fuse block.

ENGINE COOLANT TEMPERATURE GAUGE

Circuit G20 connects the engine coolant temperature gauge to the engine coolant temperature sensor. The sensor is a variable resistor and case grounded to the engine. Circuit G5 connects to the instrument cluster and supplies voltage for the gauge.

The gauge uses two coils. The first coil has fixed current flowing through it to maintain magnetic field strength. Circuit Z1 provides ground for the fixed current coil. The current level passing through the second coil is controlled by the variable resistor in the engine coolant temperature sender. The changing current varies the magnetic field in the second coil.

Refer to group 8E, Instrument Panel and Gauges for gauge operation.

FUEL GAUGE

Circuit G4 connects the fuel level sensor to the fuel gauge in the instrument cluster. Circuit G5 supplies voltage to the fuel gauge. The fuel level sensor draws voltage from circuit G5 through the fuel gauge on circuit G4.

The gauge uses two coils. The first coil has fixed current flowing through it to maintain magnetic field strength. Circuit Z1 provides ground for the fixed current coil. The current level passing through the second coil is controlled by the variable resistor in the fuel level sensor. The changing current varies the magnetic field in the second coil.

Circuit Z2 provides the ground path for the fuel level sensor.

Refer to group 8E, Instrument Panel and Gauges for gauge operation.

OIL PRESSURE GAUGE

The case grounded oil pressure sending unit is a variable resistor. The sending unit connects to the oil pressure gauge on circuit G60.

Circuit G5 connects to the instrument cluster and supplies battery voltage to the oil pressure gauge. The gauge uses two coils. The first coil has fixed current flowing through it to maintain magnetic field strength. Circuit Z1 provides ground for the fixed current coil. The current level passing through the second coil is controlled by the variable resistor in the oil pressure sending unit. The changing current varies the magnetic field in the second coil.

Refer to group 8E, Instrument Panel and Gauges for gauge operation.

TACHOMETER

The Powertrain Control Module (PCM) provides the tachometer signal to the electronic tachometer on circuit G21. Circuit G21 originates at cavity 43 of the PCM. Circuit Z1 provides ground for the tachometer's internal logic circuits.

SPEEDOMETER

The electronic speedometer and odometer receive a signal from the vehicle speed sensor on circuit G7. Circuit G5 connects to the instrument cluster and supplies battery voltage to the speedometer. Circuit Z1 provides ground for the speedometer internal logic circuits.

Circuit G7 splices to connect to the Powertrain Control Module (PCM) and if equipped, the Daytime Running Lamps (DRL) module.

FOUR-WHEEL DRIVE (4WD) INDICATOR LAMP

When the 4WD switch closes, circuit Z1 provides ground for the 4WD indicator lamp in the instrument panel. Circuit G5 connects to the instrument cluster and supplies battery voltage to the 4WD indicator lamp. Circuit G1 connects the indicator lamp to the 4WD switch.

MALFUNCTION INDICATOR (CHECK ENGINE) LAMP

The Powertrain Control Module (PCM) provides ground for the malfunction indicator (Check Engine) lamp on circuit G3. Circuit G3 connects to cavity 32 of the PCM. Circuit G5 connects to the instrument cluster and supplies battery voltage for the malfunction indicator lamp. When illuminated, the malfunction indicator lamp displays the message CHECK ENGINE.

For information regarding diagnostic trouble code access using the malfunction indicator lamp, refer to Group 14, Fuel Systems.

UP-SHIFT LAMP

On vehicles equipped with a manual transmission, the Powertrain Control Module (PCM) provides ground for the Up-Shift lamp on circuit K54. Circuit G5 provides battery voltage for the lamp.

ABS WARNING LAMP

Circuit G5 provides power for the ABS warning lamp at the instrument cluster. Ground for the ABS warning lamp is provided by either the ABS control module or by the ABS power relay when the relay is not energized. The ABS control module illuminates the lamp by providing ground on circuit G19.

Circuit G19 splices to connect to circuit B15 through a diode. When the ABS power relay is not energized, it connects circuit B15 to circuit Z12. The ground path for the warning lamp is provided through the diode to circuit B15, through the ABS power relay to ground on circuit Z12.

The diode between circuit G19 and B15 prevents voltage from flowing to the ABS control module when the ABS power relay switches to supply power on circuit B15.

BRAKE WARNING LAMP

Circuit G5 provides battery voltage for the brake warning lamp. Circuit G11 can provide ground for the lamp in 3 ways. The first ground path is through the ignition switch when the key is in the START position.

The second ground path for the brake warning lamp on circuit G11 is through the case grounded brake warning switch. When the switch closes it provides a ground.

The third ground path on circuit G11 is through the case grounded park brake switch. When the switch closes it provides ground.

HIGH BEAM INDICATOR LAMP

Circuit G34 supplies power for the high-beam indicator lamp when the operator either flashes the optical horn (high beams) or selects high beam operation. Circuit Z1 provides the ground path for the lamp.

Circuit L3 from the headlamp switch powers the high beam circuits of the headlamps. On vehicles not equipped with Daytime Running Lamps (DRL), circuit G34 double crimps to circuit L3 at the bulkhead connector.

On vehicles equipped with DRL, circuit L3 splices to the DRL module. The DRL module powers circuit G34.

TURN SIGNAL INDICATOR LAMPS

Circuit L61 supplies battery voltage to the left turn signal indicator lamp. The right turn signal indicator lamp receives battery voltage from circuit L60. The turn signal/hazard flasher switch powers circuits L60 and L61. Circuit Z1 provides ground for the lamps.

HELPFUL INFORMATION

- If the warning lamps, gauges and indicator lamps don't operate, check fuse 4 in the PDC and fuse 9 in the fuse block.
- If the illumination lamps don't operate, check fuse 10 in the fuse block.

DIAGRAM INDEX

Component	Page
4WD Switch	8W-40-9
ABS Control Module	8W-40-5
Brake Warning Switch	8W-40-5
Combination Buzzer	8W-40-7, 8
Daytime Running Lamp (DRL) Module	8W-40-4, 6
Engine Coolant Temperature Sensor	8W-40-7, 8
Engine Oil Pressure Sensor	8W-40-9
Fuse 3 (PDC)	8W-40-3, 7, 8
Fuse 4 (PDC)	8W-40-4, 7, 8
Fuse 7 (PDC)	8W-40-6
Fuse 8 (Fuse Block)	8W-40-3, 7, 8
Fuse 9 (Fuse Block)	8W-40-8
Fuse 10 (Fuse Block)	8W-40-3, 7, 10
Gauge Package	8W-40-7, 8, 9
Headlamp Switch	8W-40-3, 6, 7, 8
Headlamp Dimmer Switch	8W-40-6
Ignition Switch	8W-40-4, 5, 8
Instrument Cluster	8W-40-3 thru 9
Panel Lamp Dimmer Switch	8W-40-3, 7, 8
Park Brake Switch	8W-40-5
Powertrain Control Module	8W-40-4, 5

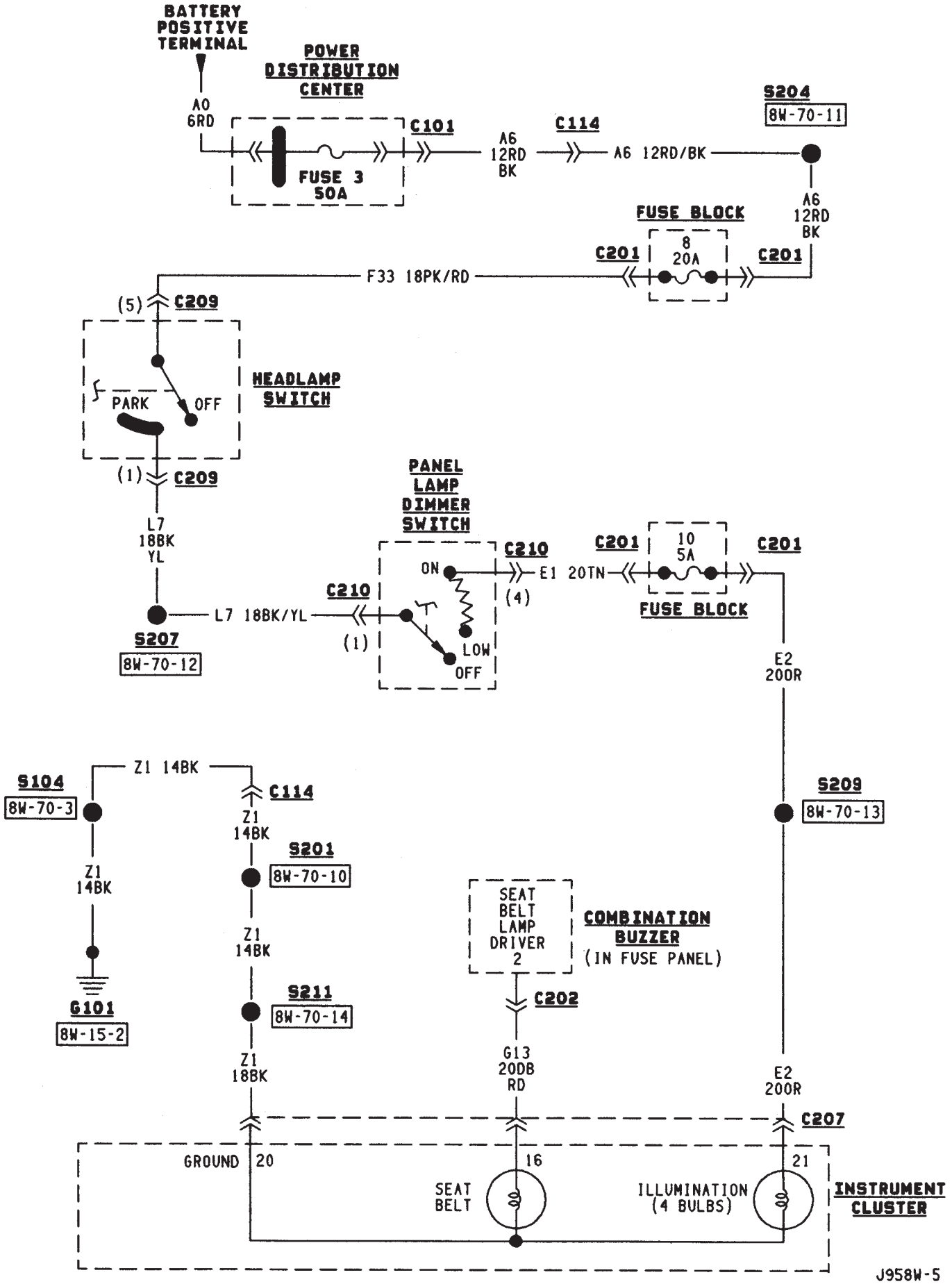
BATTERY POSITIVE TERMINAL
A0 6RD
POWER DISTRIBUTION CENTER
C101
FUSE 3 50A
A6 12RD BK
C114
A6 12RD/BK
S204
8W-70-11
A6 12RD BK
FUSE BLOCK
C201
8 20A
C201
F33 18PK/RD
(5)
C209
HEADLAMP SWITCH
PARK
OFF
(1)
C209
L7 18BK YL
S207
8W-70-12
L7 18BK/YL
PANEL LAMP DIMMER SWITCH
C210
(1)
ON
LOW
OFF
C210
(4)
E1 20TN
C201
10 5A
C201
FUSE BLOCK
E2 20OR
S209
8W-70-13
Z1 14BK
S104
8W-70-3
Z1 14BK
G101
8W-15-2
C114
Z1 14BK
S201
8W-70-10
Z1 14BK
S211
8W-70-14
Z1 18BK
SEAT BELT LAMP DRIVER 2
COMBINATION BUZZER
(IN FUSE PANEL)
C202
G13 20DB RD
E2 20OR
C207
GROUND
20
16
21
SEAT BELT
ILLUMINATION (4 BULBS)
INSTRUMENT CLUSTER
J958W-5

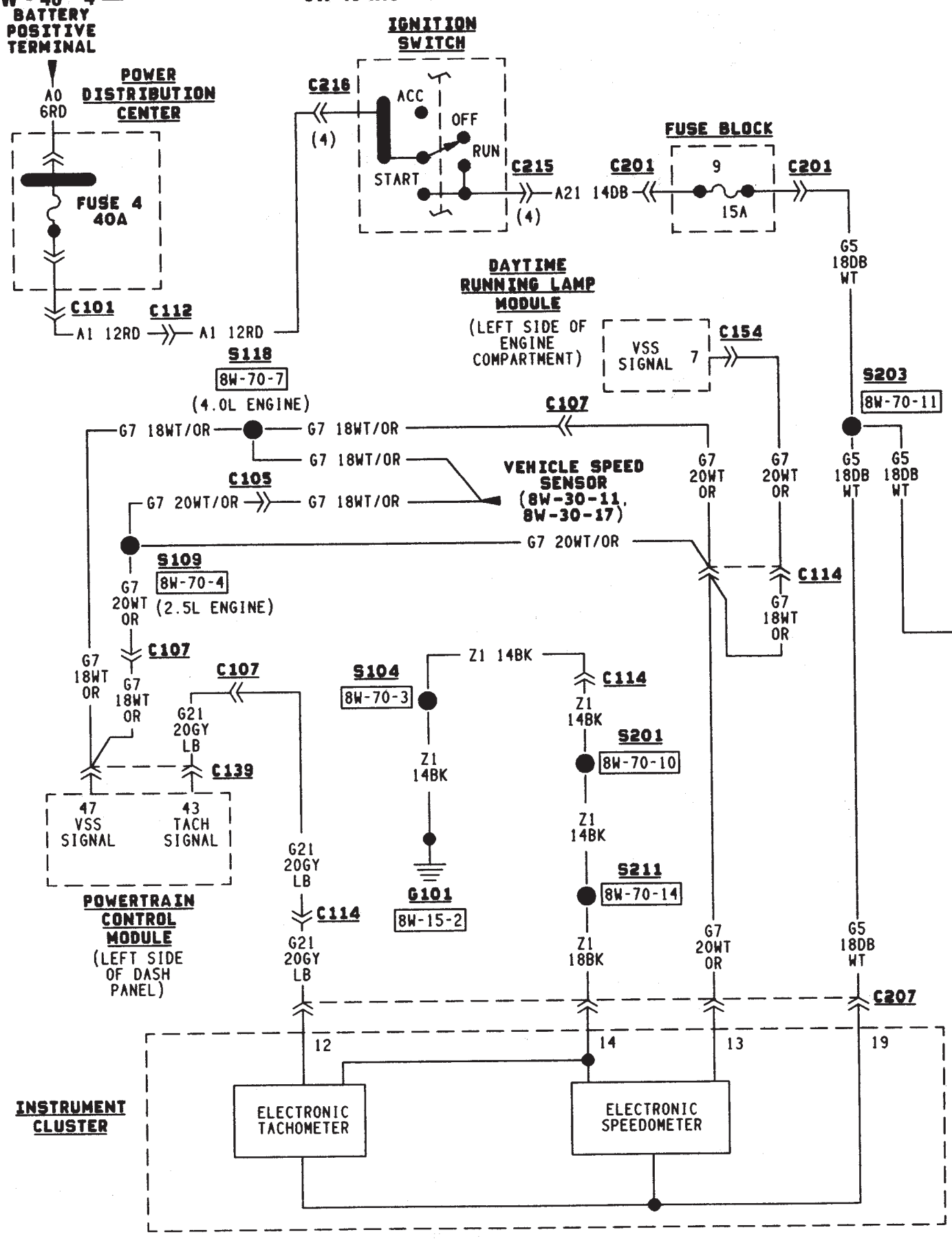
BATTERY POSITIVE TERMINAL
A0 6RD
POWER DISTRIBUTION CENTER
FUSE 4 40A
C101
C112
A1 12RD
A1 12RD
C216
(4)
IGNITION SWITCH
ACC
OFF
RUN
START
C215
A21 14DB
(4)
C201
9
15A
C201
FUSE BLOCK
G5 18DB WT
DAYTIME RUNNING LAMP MODULE
(LEFT SIDE OF ENGINE COMPARTMENT)
VSS SIGNAL 7
C154
S118
8W-70-7
(4.0L ENGINE)
S203
8W-70-11
C107
G7 18WT/OR
G7 18WT/OR
G7 18WT/OR
C105
G7 20WT/OR
G7 18WT/OR
VEHICLE SPEED SENSOR
(8W-30-11, 8W-30-17)
G7 20WT OR
G7 20WT OR
G5 18DB WT
G5 18DB WT
G7 20WT/OR
S109
8W-70-4
(2.5L ENGINE)
G7 20WT OR
C114
G7 18WT OR
C107
G7 18WT OR
G7 18WT OR
C107
G21 20GY LB
C139
S104
8W-70-3
Z1 14BK
C114
Z1 14BK
S201
8W-70-10
Z1 14BK
Z1 14BK
G101
8W-15-2
S211
8W-70-14
47 VSS SIGNAL
43 TACH SIGNAL
POWERTRAIN CONTROL MODULE
(LEFT SIDE OF DASH PANEL)
G21 20GY LB
C114
G21 20GY LB
Z1 18BK
G7 20WT OR
G5 18DB WT
C207
12
14
13
19
INSTRUMENT CLUSTER
ELECTRONIC TACHOMETER
ELECTRONIC SPEEDOMETER

J958W-5

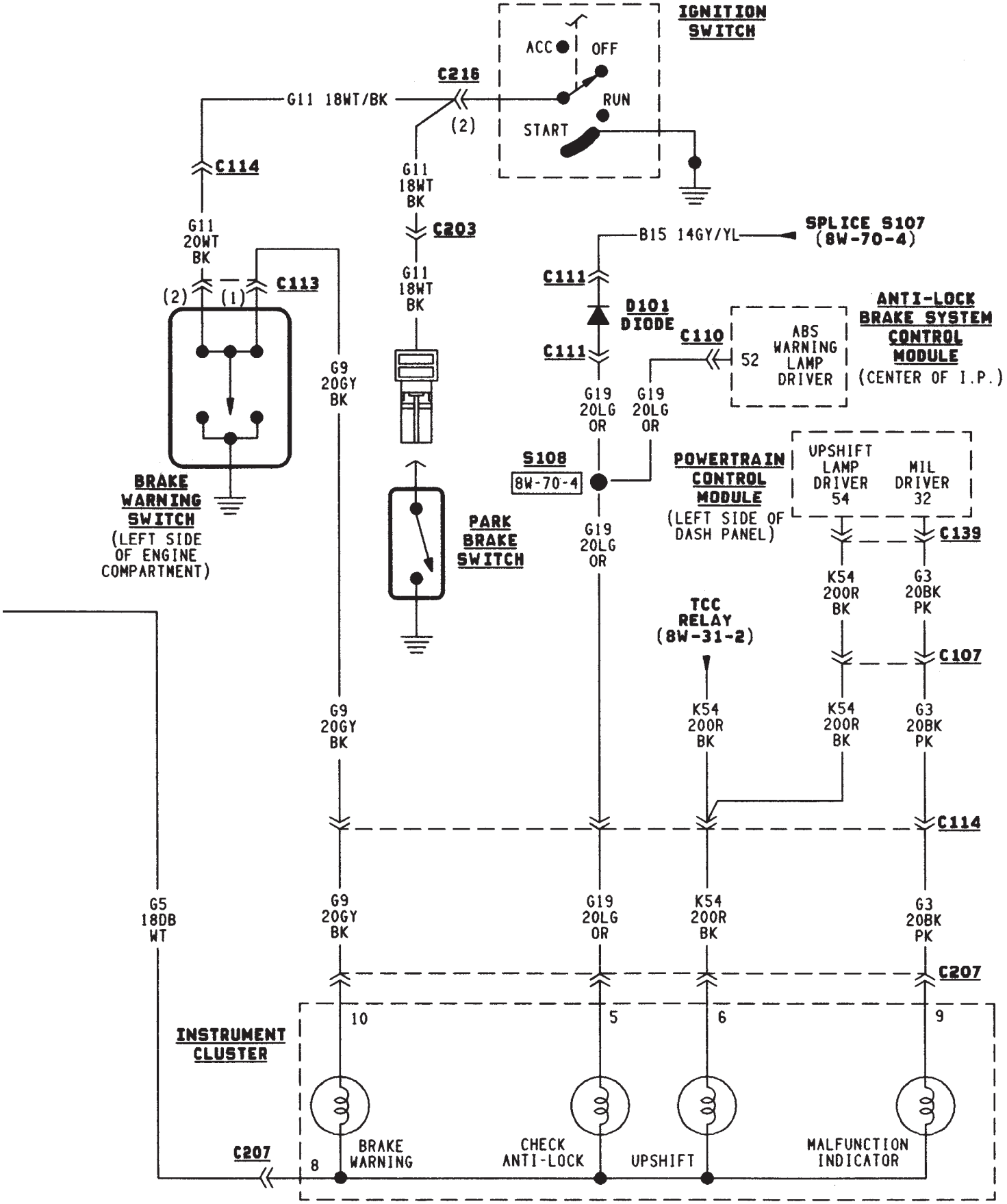
IGNITION SWITCH
ACC
OFF
RUN
START
C216
G11 18WT/BK
(2)
C114
G11 20WT BK
G11 18WT BK
C203
G11 18WT BK
B15 14GY/YL
SPLICE S107 (8W-70-4)
C111
D101 DIODE
C111
C110
52
ABS WARNING LAMP DRIVER
ANTI-LOCK BRAKE SYSTEM CONTROL MODULE
(CENTER OF I.P.)
(2)
(1)
C113
G9 20GY BK
G19 20LG OR
G19 20LG OR
S108
8W-70-4
POWERTRAIN CONTROL MODULE
(LEFT SIDE OF DASH PANEL)
UPSHIFT LAMP DRIVER 54
MIL DRIVER 32
C139
BRAKE WARNING SWITCH
(LEFT SIDE OF ENGINE COMPARTMENT)
PARK BRAKE SWITCH
G19 20LG OR
K54 200R BK
G3 20BK PK
TCC RELAY (8W-31-2)
C107
K54 200R BK
G9 20GY BK
K54 200R BK
G3 20BK PK
C114
G5 18DB WT
G9 20GY BK
G19 20LG OR
K54 200R BK
G3 20BK PK
C207
INSTRUMENT CLUSTER
10
5
6
9
C207
8
BRAKE WARNING
CHECK ANTI-LOCK
UPSHIFT
MALFUNCTION INDICATOR

J958W-5

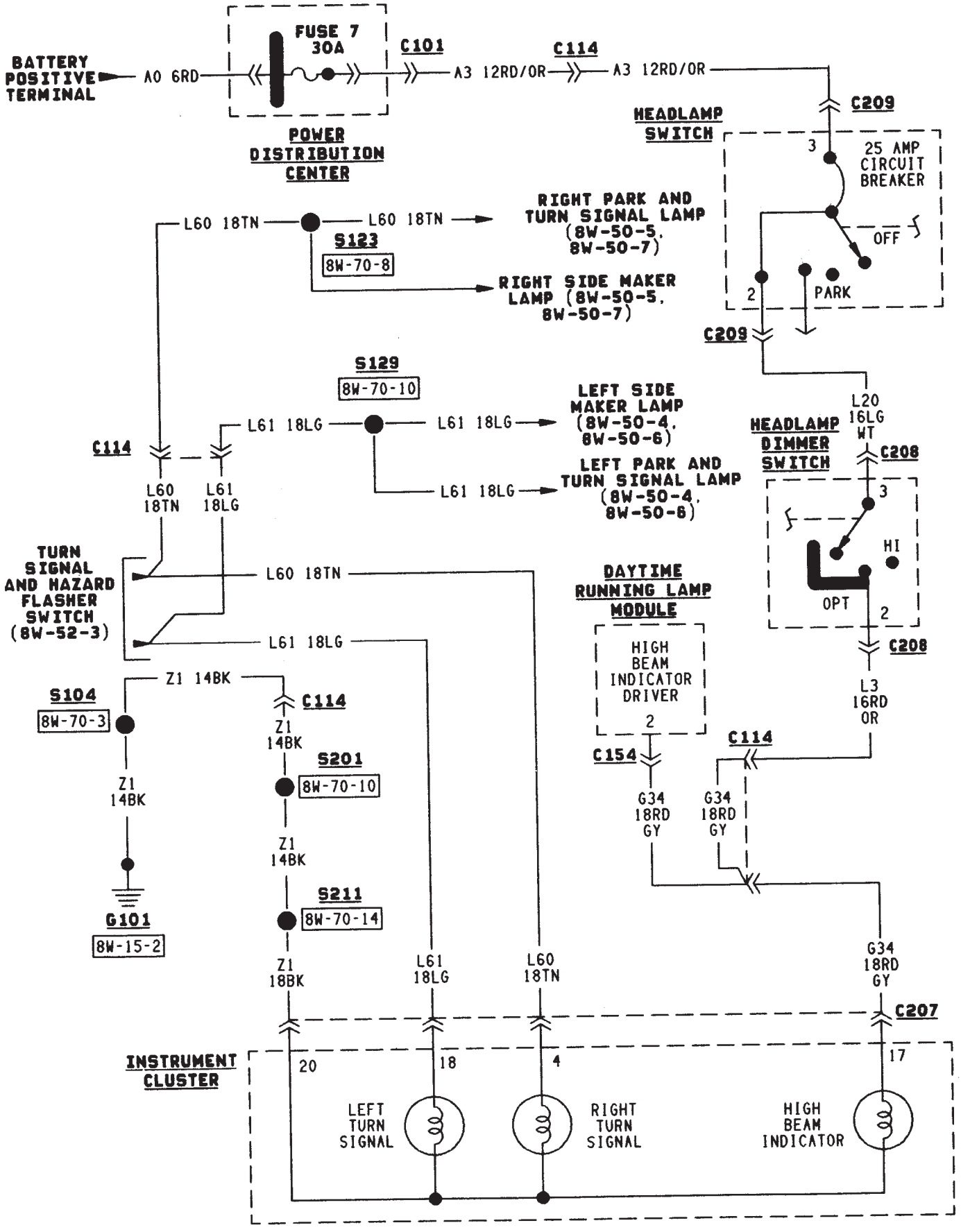
BATTERY POSITIVE TERMINAL
A0 6RD
FUSE 7 30A
C101
A3 12RD/OR
C114
A3 12RD/OR
C209
POWER DISTRIBUTION CENTER
HEADLAMP SWITCH
3
25 AMP CIRCUIT BREAKER
OFF
PARK
2
C209
L60 18TN
L60 18TN
S123
8W-70-8
RIGHT PARK AND TURN SIGNAL LAMP (8W-50-5, 8W-50-7)
RIGHT SIDE MAKER LAMP (8W-50-5, 8W-50-7)
S129
8W-70-10
L61 18LG
L61 18LG
LEFT SIDE MAKER LAMP (8W-50-4, 8W-50-6)
L61 18LG
LEFT PARK AND TURN SIGNAL LAMP (8W-50-4, 8W-50-6)
L20 16LG WT
HEADLAMP DIMMER SWITCH
C208
3
HI
OPT
2
C208
C114
L60 18TN
L61 18LG
TURN SIGNAL AND HAZARD FLASHER SWITCH (8W-52-3)
L60 18TN
L61 18LG
DAYTIME RUNNING LAMP MODULE
HIGH BEAM INDICATOR DRIVER
2
C154
G34 18RD GY
C114
G34 18RD GY
L3 16RD OR
Z1 14BK
C114
Z1 14BK
S104
8W-70-3
Z1 14BK
S201
8W-70-10
Z1 14BK
S211
8W-70-14
G101
8W-15-2
Z1 18BK
L61 18LG
L60 18TN
G34 18RD GY
C207
INSTRUMENT CLUSTER
20
18
4
17
LEFT TURN SIGNAL
RIGHT TURN SIGNAL
HIGH BEAM INDICATOR

J958W-5

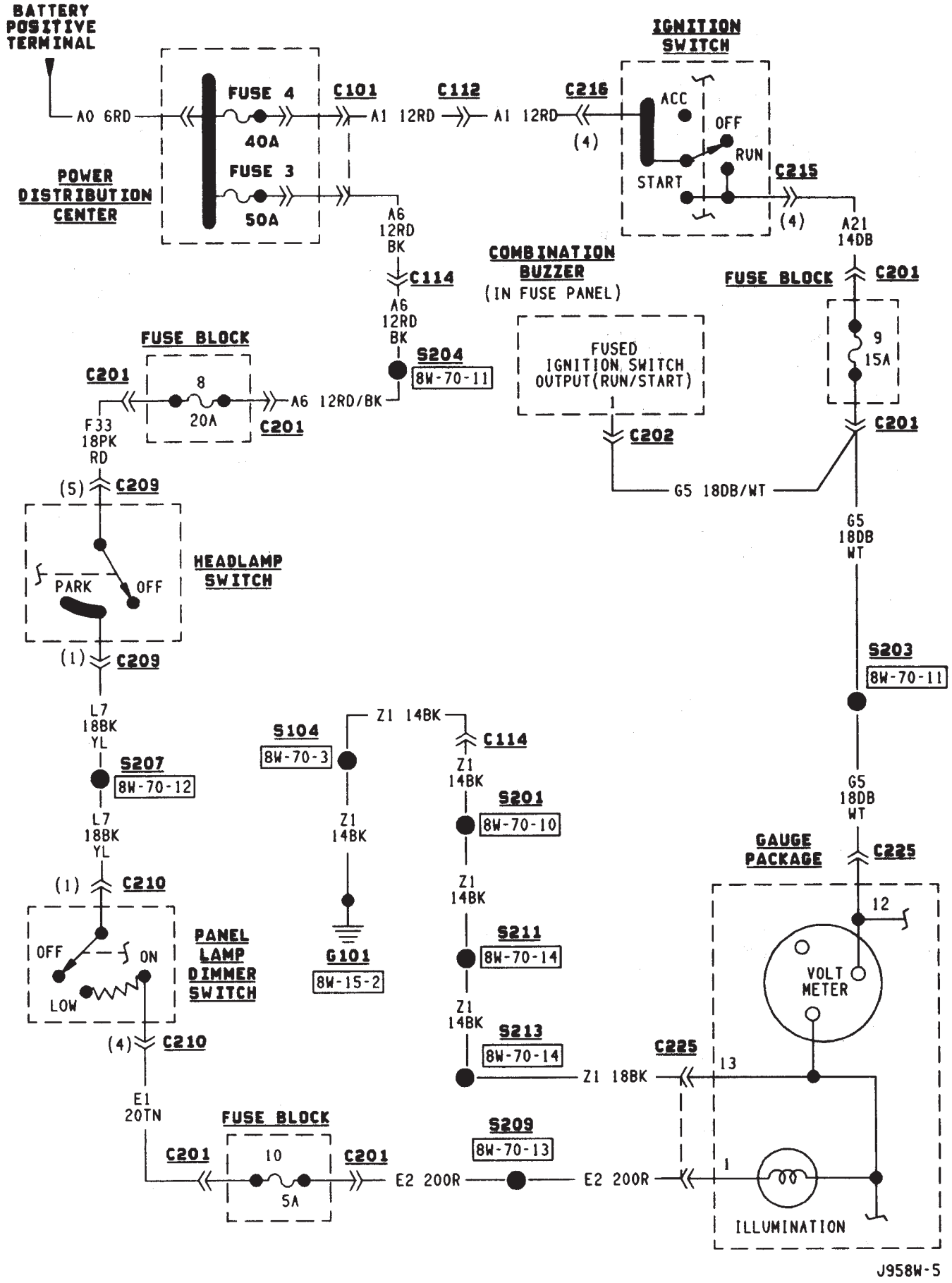
BATTERY POSITIVE TERMINAL
A0 6RD
FUSE 4
40A
FUSE 3
50A
POWER DISTRIBUTION CENTER
C101
A1 12RD
C112
A1 12RD
C216
(4)
IGNITION SWITCH
ACC
OFF
RUN
START
C215
(4)
A21 14DB
A6 12RD BK
C114
A6 12RD BK
S204
8W-70-11
COMBINATION BUZZER
(IN FUSE PANEL)
FUSED IGNITION SWITCH OUTPUT (RUN/START)
C202
FUSE BLOCK
C201
8
20A
C201
A6 12RD/BK
F33 18PK RD
(5)
C209
HEADLAMP SWITCH
PARK
OFF
(1)
C209
L7 18BK YL
S207
8W-70-12
L7 18BK YL
(1)
C210
PANEL LAMP DIMMER SWITCH
OFF
ON
LOW
(4)
C210
E1 20TN
FUSE BLOCK
C201
10
5A
C201
S104
8W-70-3
Z1 14BK
G101
8W-15-2
Z1 14BK
C114
Z1 14BK
S201
8W-70-10
Z1 14BK
S211
8W-70-14
Z1 14BK
S213
8W-70-14
S209
8W-70-13
E2 200R
E2 200R
FUSE BLOCK
C201
9
15A
C201
G5 18DB/WT
G5 18DB WT
S203
8W-70-11
G5 18DB WT
GAUGE PACKAGE
C225
12
VOLT METER
C225
13
1
ILLUMINATION
Z1 18BK
J958W-5

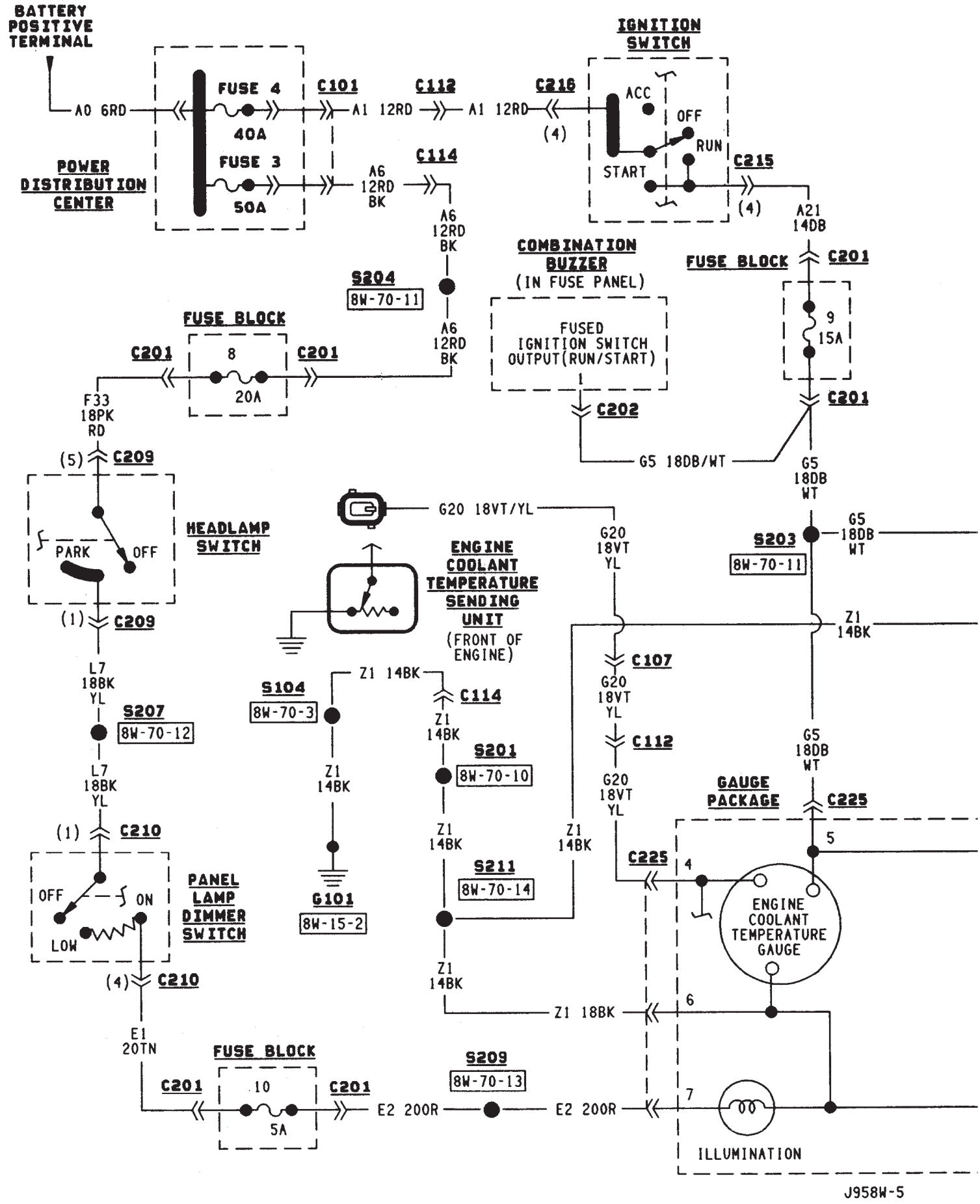
BATTERY POSITIVE TERMINAL
A0 6RD
POWER DISTRIBUTION CENTER
FUSE 4
40A
FUSE 3
50A
C101
A1 12RD
C112
A1 12RD
C216
(4)
IGNITION SWITCH
ACC
OFF
RUN
START
C215
(4)
A21 14DB
C114
A6 12RD BK
A6 12RD BK
S204
8W-70-11
COMBINATION BUZZER (IN FUSE PANEL)
FUSED IGNITION SWITCH OUTPUT(RUN/START)
1
C202
FUSE BLOCK
C201
9
15A
C201
G5 18DB/WT
G5 18DB WT
FUSE BLOCK
C201
8
20A
C201
F33 18PK RD
(5) C209
HEADLAMP SWITCH
PARK
OFF
(1) C209
L7 18BK YL
S207
8W-70-12
L7 18BK YL
(1) C210
PANEL LAMP DIMMER SWITCH
OFF
ON
LOW
(4) C210
E1 20TN
G20 18VT/YL
ENGINE COOLANT TEMPERATURE SENDING UNIT (FRONT OF ENGINE)
G20 18VT YL
S203
8W-70-11
G5 18DB WT
Z1 14BK
C107
G20 18VT YL
C112
G20 18VT YL
Z1 14BK
S104
8W-70-3
Z1 14BK
C114
Z1 14BK
S201
8W-70-10
Z1 14BK
G101
8W-15-2
Z1 14BK
S211
8W-70-14
Z1 14BK
Z1 18BK
GAUGE PACKAGE
C225
5
C225
4
6
7
ENGINE COOLANT TEMPERATURE GAUGE
ILLUMINATION
FUSE BLOCK
C201
10
5A
C201
S209
8W-70-13
E2 200R
E2 200R
J958W-5

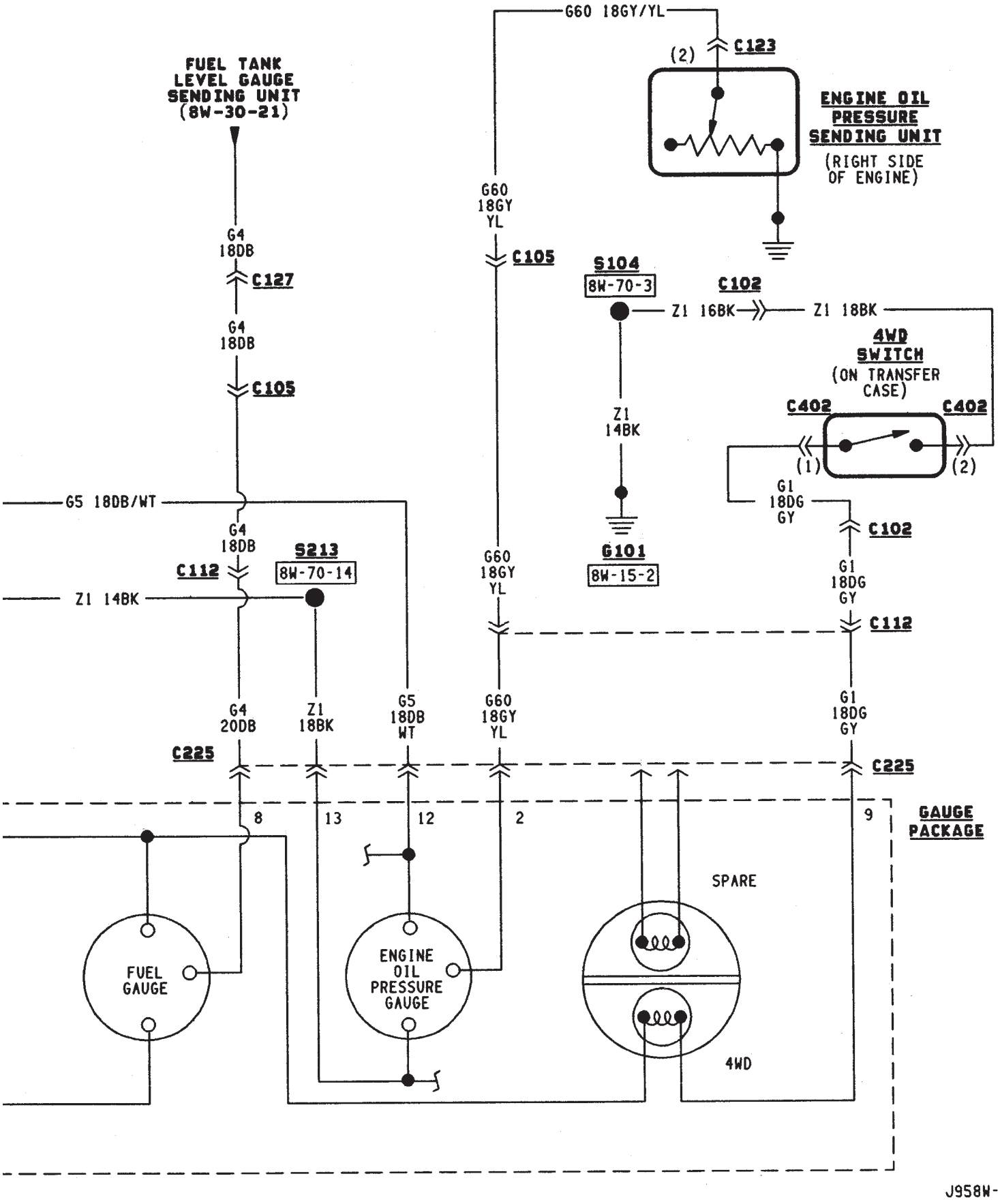
G60 18GY/YL
(2)
C123
ENGINE OIL PRESSURE SENDING UNIT
(RIGHT SIDE OF ENGINE)
FUEL TANK LEVEL GAUGE SENDING UNIT (8W-30-21)
G4 18DB
C127
G4 18DB
C105
G60 18GY YL
C105
S104
8W-70-3
C102
Z1 16BK
Z1 18BK
4WD SWITCH
(ON TRANSFER CASE)
C402
C402
(1)
(2)
Z1 14BK
G101
8W-15-2
G1 18DG GY
C102
G5 18DB/WT
G4 18DB
C112
S213
8W-70-14
Z1 14BK
G60 18GY YL
G1 18DG GY
C112
G4 20DB
Z1 18BK
G5 18DB WT
G60 18GY YL
G1 18DG GY
C225
C225
8
13
12
2
9
GAUGE PACKAGE
SPARE
FUEL GAUGE
ENGINE OIL PRESSURE GAUGE
4WD
J958W-5

HORN/CIGAR LIGHTER

HORN

The horn system uses a switch and horn relay. The horn switch is in the center of the steering wheel.

Circuit A4 from fuse 8 in the Power Distribution Center (PDC) feeds circuit F31 through fuse 15 in the PDC. Circuit F31 is HOT at all times and powers the coil and contact sides of the horn relay.

When the case grounded horn switch is pressed, circuit X3 provides ground for the coil side of the relay and the contacts close. When the contacts close, circuit X2 supplies voltage to the horn. Circuit Z1 provides ground for the horn.

HELPFUL INFORMATION

- The horn switch is grounded to the steering wheel.
- Circuit F31 is double crimped at the coil side of the horn relay.
- Check fuse 8 in the PDC and fuse 15 in the fuse block.

CIGAR LIGHTER

In the ACCESSORY or RUN position, the ignition switch supplies voltage to fuse 7 in the fuse block on circuit A31. Fuse 7 feeds circuit F30 which connects to the cigar lighter. When the lighter is depressed, the contacts inside of the lighter element close and voltage flows to ground on circuit Z1.

HELPFUL INFORMATION

- In the ACCESSORY or RUN position, the ignition switch connects circuit A1 from fuse 4 in the PDC with circuit A31.
- Circuit F30 also powers the radio and radio relay.

DIAGRAM INDEX

Component	Page
Cigar Lighter	8W-41-3
Fuse 4 (PDC)	8W-41-3
Fuse 8 (PDC)	8W-41-2
Fuse 11 (PDC)	8W-41-2
Fuse 7 (Fuse Block)	8W-41-3
Horn	8W-41-2
Horn Relay	8W-41-2
Horn Switch	8W-41-2
Ignition Switch	8W-41-3

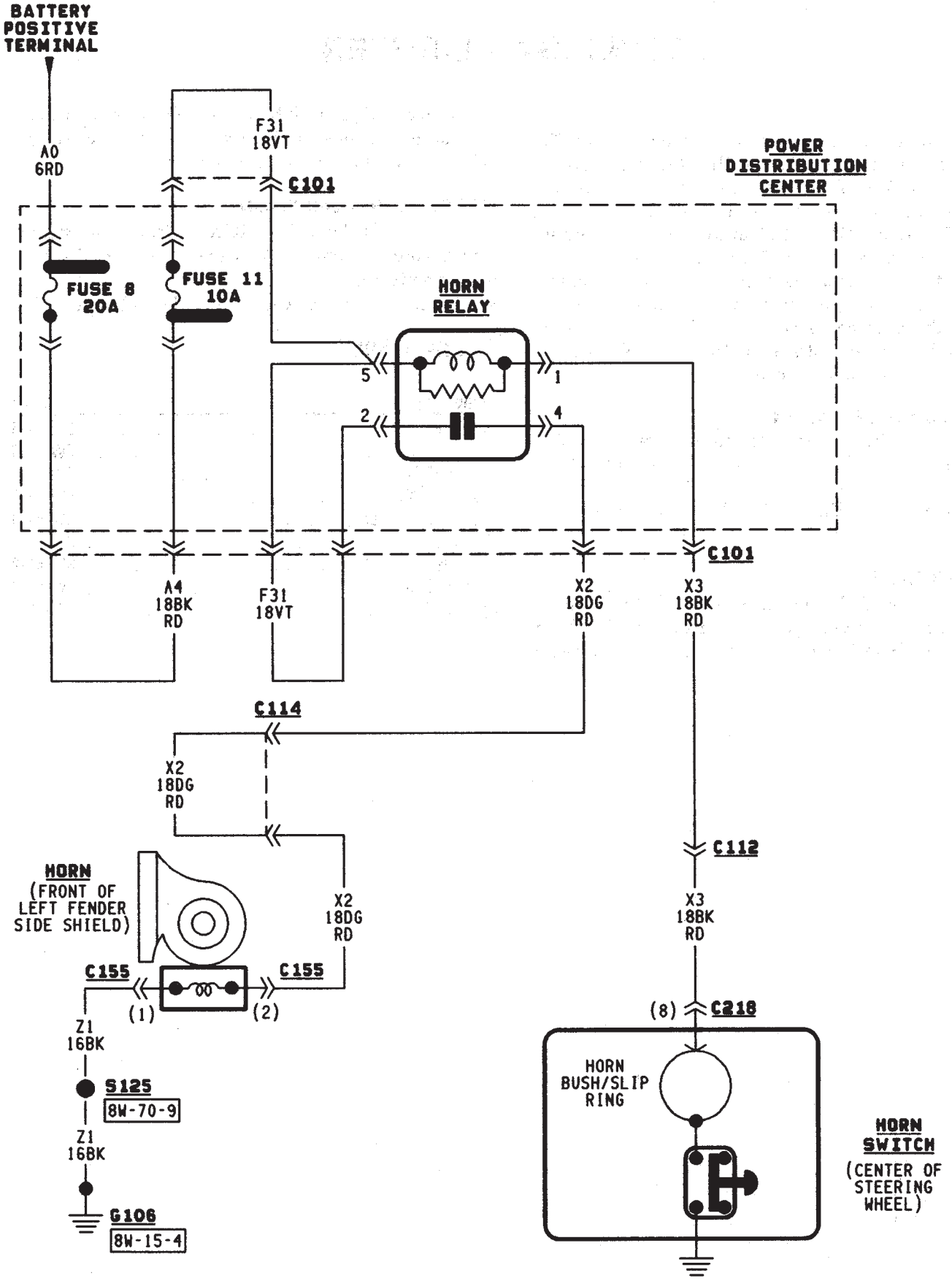
BATTERY POSITIVE TERMINAL
A0 6RD
F31 18VT
C101
POWER DISTRIBUTION CENTER
FUSE 8 20A
FUSE 11 10A
HORN RELAY
5
1
2
4
C101
A4 18BK RD
F31 18VT
X2 18DG RD
X3 18BK RD
C114
X2 18DG RD
C112
X3 18BK RD
HORN (FRONT OF LEFT FENDER SIDE SHIELD)
X2 18DG RD
C155
C155
(1)
(2)
(8)
C218
Z1 16BK
S125
8W-70-9
Z1 16BK
G106
8W-15-4
HORN BUSH/SLIP RING
HORN SWITCH (CENTER OF STEERING WHEEL)

J958W-5

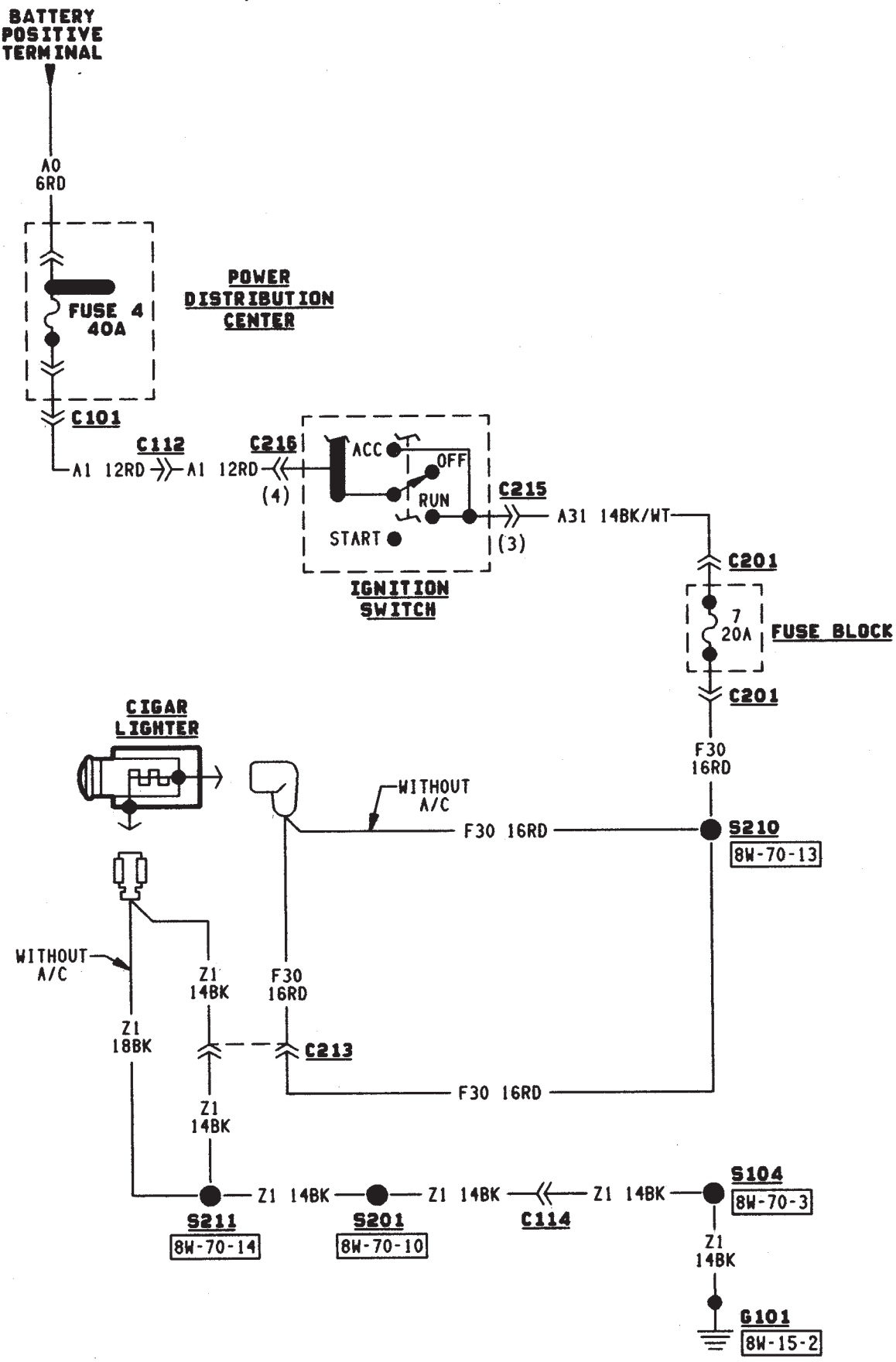
BATTERY POSITIVE TERMINAL
A0 6RD
FUSE 4 40A
POWER DISTRIBUTION CENTER
C101
C112
A1 12RD
C216
A1 12RD
(4)
ACC
OFF
RUN
START
C215
(3)
IGNITION SWITCH
A31 14BK/WT
C201
7 20A
FUSE BLOCK
C201
F30 16RD
CIGAR LIGHTER
WITHOUT A/C
F30 16RD
S210
8W-70-13
WITHOUT A/C
Z1 18BK
Z1 14BK
F30 16RD
C213
F30 16RD
Z1 14BK
Z1 14BK
Z1 14BK
Z1 14BK
Z1 14BK
S104
8W-70-3
S211
8W-70-14
S201
8W-70-10
C114
Z1 14BK
G101
8W-15-2

J958W-5

AIR CONDITIONING/HEATER

CONTENTS

	page		page
HEATER AND AIR CONDITIONING	2	**HEATER SYSTEM**	1

GENERAL INFORMATION

This section of the wiring diagrams is divided into two sub-sections; Heater, and A/C-Heater. When referring to the circuit descriptions or wiring diagrams, ensure that you use the correct sub-section.

HEATER SYSTEM

HEATER

In the RUN position, the ignition switch connects circuit A1 from fuse 4 in the Power Distribution Center (PDC) to circuit A22. Circuit A22 powers a bus bar in the fuse block that supplies voltage to circuit C1 through fuse 12.

A heater-off switch in circuit C1 opens when the heater controls are in the VENT position. When the heater-off switch closes, circuit C1 supplies battery voltage to the blower motor switch. The switch sets blower motor speed to HIGH, MEDIUM, LOW or OFF.

The switch connects to the blower motor resistor block in the LOW and MEDIUM positions and directly to the blower motor in the HIGH position. The resistor block contains two resistors connected in series. Circuit C7 connects the resistor block to the blower motor.

From the blower motor resistor block, circuit C7 is double crimped at the HIGH terminal of the blower motor switch. Circuit C7 continues to the blower motor from the blower motor switch.

When the blower motor switch is in the LOW position, it supplies voltage to the resistor block on circuit C4. From circuit C4, voltage passes through both resistors in the resistor block to the blower motor on circuit C7.

In the MEDIUM position, the blower motor supplies voltage to the resistor block on circuit C5. From circuit C5 voltage flows through one resistor to the blower motor on circuit C7.

In the HIGH position, the blower motor switch connects directly to the blower motor on circuit C7. Voltage does not pass through the resistor block.

Circuit Z1 provides ground for the blower motor.

HELPFUL INFORMATION

- Check fuse 4 in the PDC.
- Check fuse 12 in the fuse block.

DIAGRAM INDEX

Component	Page
Blower Motor	8W-42-3
Blower Motor Resistor	8W-42-3
Blower Motor Switch	8W-42-3
Fuse 4 (PDC)	8W-42-3
Fuse 12 (Fuse Block)	8W-42-3
Heater Switch	8W-42-3
Ignition Switch	8W-42-3

AIR CONDITIONING AND HEATER

GENERAL INFORMATION

On vehicles built with the 2.5L engine, the electrical system has provisions for dealer installed air conditioning. The provisions consist of two connectors which include circuitry for:

- Circuit C1 - Ignition feed
- Circuit C21 - Blower motor switch
- Circuit C91 - A/C request signal
- Circuit C20 - A/C select signal
- Circuit C13 - Ground for coil side of A/C compressor clutch relay
- Circuit G5 - Battery voltage for coil side of A/C compressor clutch relay

A/C COMPRESSOR

When the ignition switch is in the RUN position it connects circuit A1 from fuse 4 in the Power Distribution Center (PDC) to circuit A22. Circuit A22 supplies battery voltage to fuse 12 in the fuse block. Fuse 12 powers circuit C1.

Circuit C1 supplies battery voltage to the A/C blower switch. Circuit C21 connects the A/C blower switch to the A/C low pressure switch.

When the operator selects A/C operation, the A/C blower switch provides the A/C request signal to cavity 27 of the Powertrain Control Module (PCM) on circuit C91. At the same time, the blower switch supplies voltage through the A/C thermostat to circuit C21.

Circuit C21 supplies voltage to the A/C low pressure switch. When the A/C low pressure switch closes, circuit C20 provides battery voltage to the contact side of the A/C compressor clutch relay and provides the A/C select signal to the PCM. Circuit C20 is double crimped at the contact side of the relay. The C20 circuit branch from the relay supplies the A/C select input to cavity 28 of the PCM.

After receiving the A/C request signal, the PCM energizes the A/C compressor clutch relay by providing ground for the coil side of the relay on circuit C13. Circuit C13 connects to cavity 34 of the PCM.

Circuit G5 from fuse 9 in the fuse block supplies voltage to the coil side of the relay. In the START or RUN positions the ignition switch connects circuit A1 from fuse 4 in the PDC with circuit A21. Circuit A21 connects to the fuse block bus bar that powers circuit C5 through fuse 9.

When the PCM energizes the A/C compressor clutch relay, the relay switches from its normally grounded position to connect circuit C20 to circuit C3. Circuit C3 supplies voltage to the case grounded A/C compressor clutch.

HELPFUL INFORMATION

- Circuit G5 is double crimped at the coil side of the A/C compressor clutch relay. The G5 branch from the relay continues to the back-up lamp switch.
- Circuit Z1 provides ground for the A/C compressor clutch relay when the relay is in its normally grounded position.

A/C-HEATER BLOWER MOTOR

When the ignition switch is in the RUN position it connects circuit A1 from fuse 4 in the Power Distribution Center (PDC) to circuit A22. Circuit A22 supplies battery voltage to fuse 12 in the fuse block. Fuse 12 powers circuit C1.

Circuit C1 supplies battery voltage to the A/C blower switch. In the LOW position, the A/C blower switch supplies voltage to the low speed brush of the blower motor. In the MEDIUM position, the switch supplies voltage to the medium speed bush of the blower motor. In the HIGH position, the switch supplies voltage to the high speed brush of the blower motor.

The blower motor has a field jumper. The ground circuit for the blower motor connects to the cigar lighter. Circuit Z1 provides ground for the blower motor and the cigar lighter.

HELPFUL INFORMATION

- Check fuse 4 in the PDC.
- Check fuse 12 in the fuse block.

DIAGRAM INDEX

Component	Page
A/C Compressor Clutch	8W-42-4
A/C Compressor Clutch Relay	8W-42-4
A/C Thermostat	8W-42-5
Blower Motor	8W-42-5
Blower Motor Switch	8W-42-5
Fuse 4 (PDC)	8W-42-4, 6
Fuse 7 (Fuse Block)	8W-42-6
Fuse 9 (Fuse Block)	8W-42-4, 6
Fuse 12 (Fuse Block)	8W-42-4, 6
Ignition Switch	8W-42-4, 6
Powertrain Control Module	8W-42-4, 6

HEATER ONLY

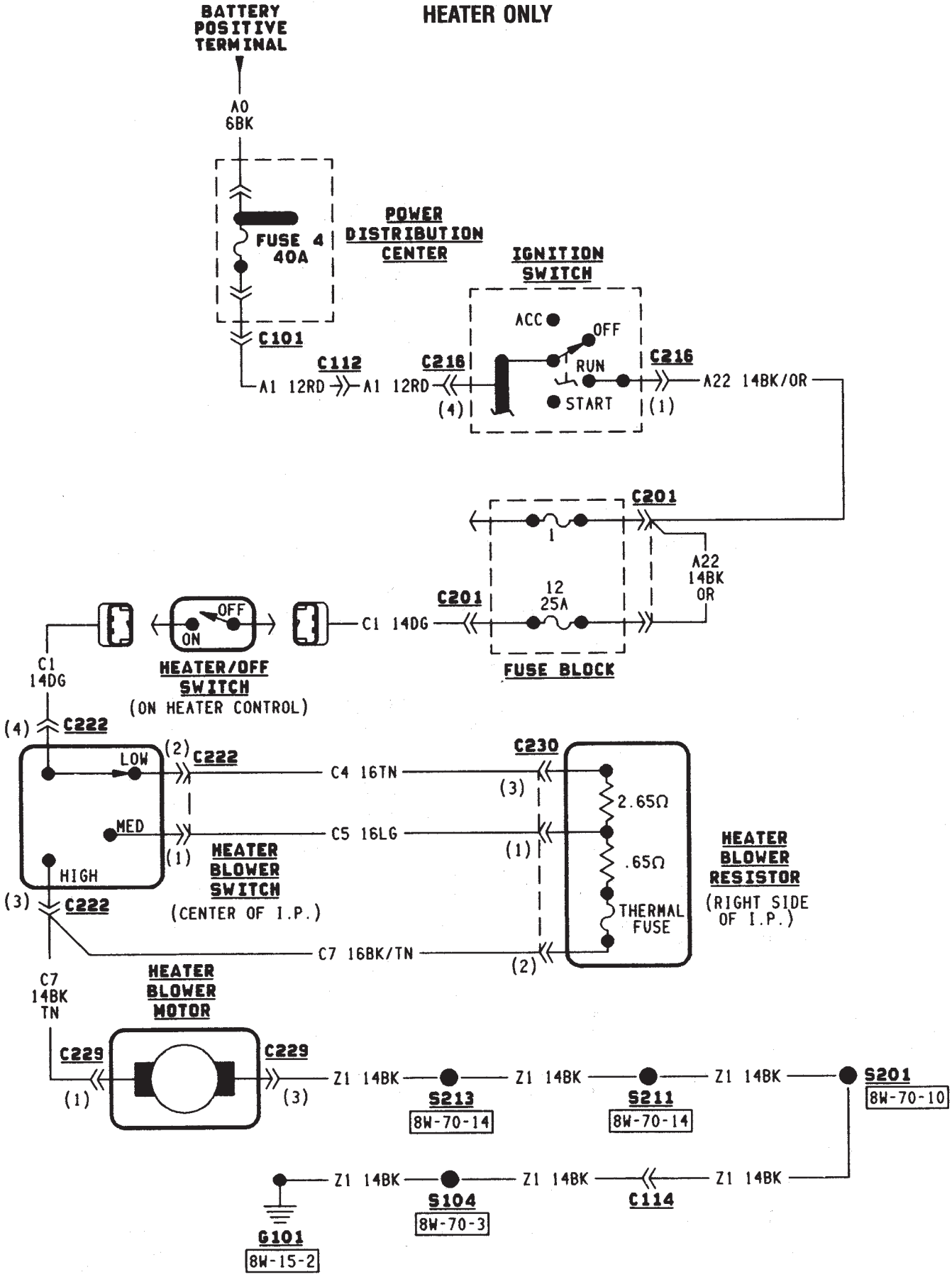

J958W-5

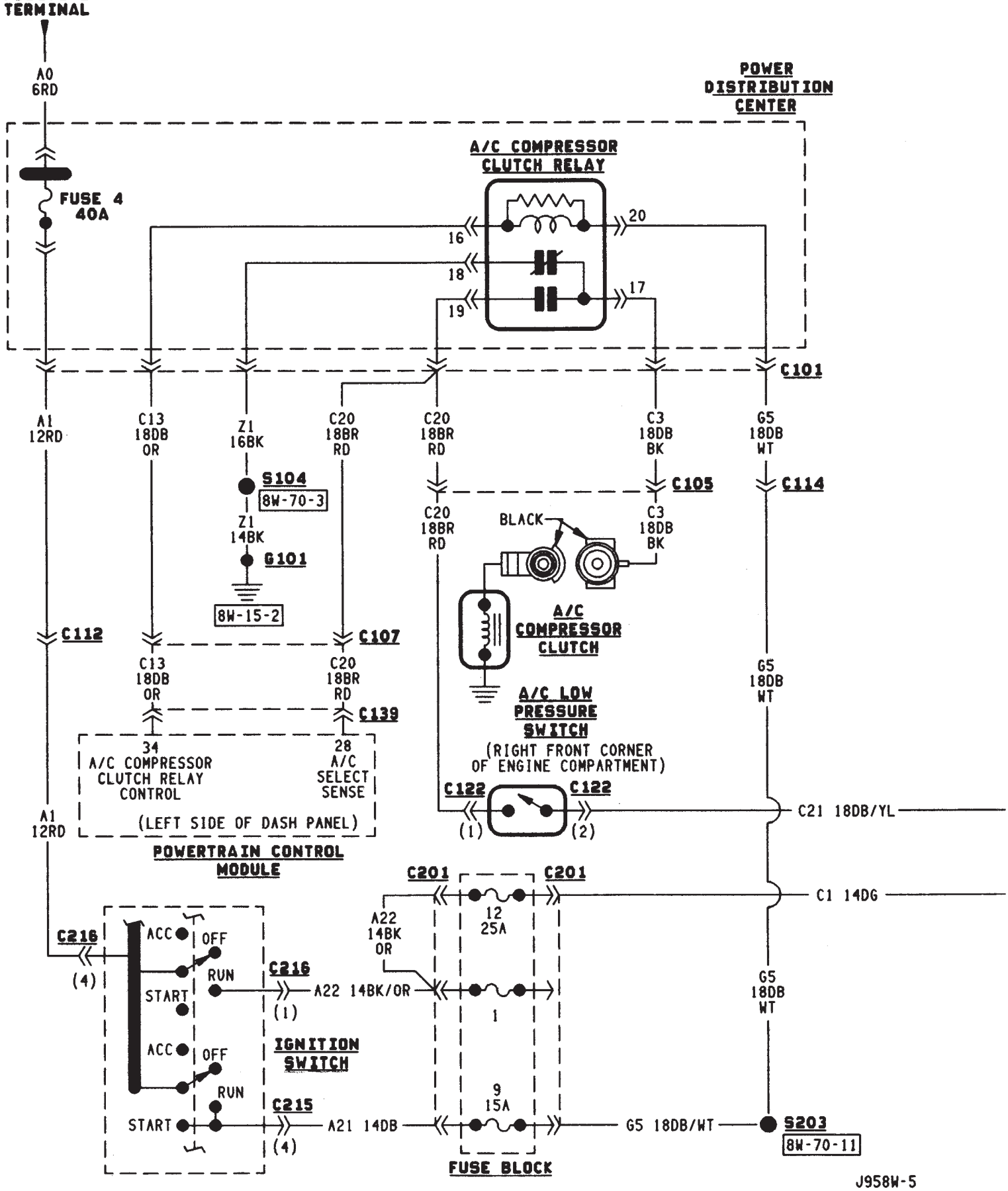
BATTERY POSITIVE TERMINAL
A0 6RD
POWER DISTRIBUTION CENTER
A/C COMPRESSOR CLUTCH RELAY
FUSE 4 40A
16
18
19
20
17
C101
A1 12RD
C13 18DB OR
Z1 16BK
C20 18BR RD
C20 18BR RD
C3 18DB BK
G5 18DB WT
S104
8W-70-3
C105
C114
Z1 14BK
G101
8W-15-2
C20 18BR RD
C3 18DB BK
BLACK
A/C COMPRESSOR CLUTCH
C112
C107
C13 18DB OR
C20 18BR RD
C139
A/C LOW PRESSURE SWITCH
(RIGHT FRONT CORNER OF ENGINE COMPARTMENT)
34 A/C COMPRESSOR CLUTCH RELAY CONTROL
28 A/C SELECT SENSE
(LEFT SIDE OF DASH PANEL)
C122
C122
(1)
(2)
C21 18DB/YL
A1 12RD
POWERTRAIN CONTROL MODULE
C201
C201
C1 14DG
A22 14BK OR
12 25A
C216
ACC
OFF
RUN
START
C216
(4)
A22 14BK/OR
(1)
1
G5 18DB WT
IGNITION SWITCH
ACC
OFF
RUN
START
C215
9 15A
A21 14DB
G5 18DB/WT
S203
8W-70-11
(4)
FUSE BLOCK
J958W-5

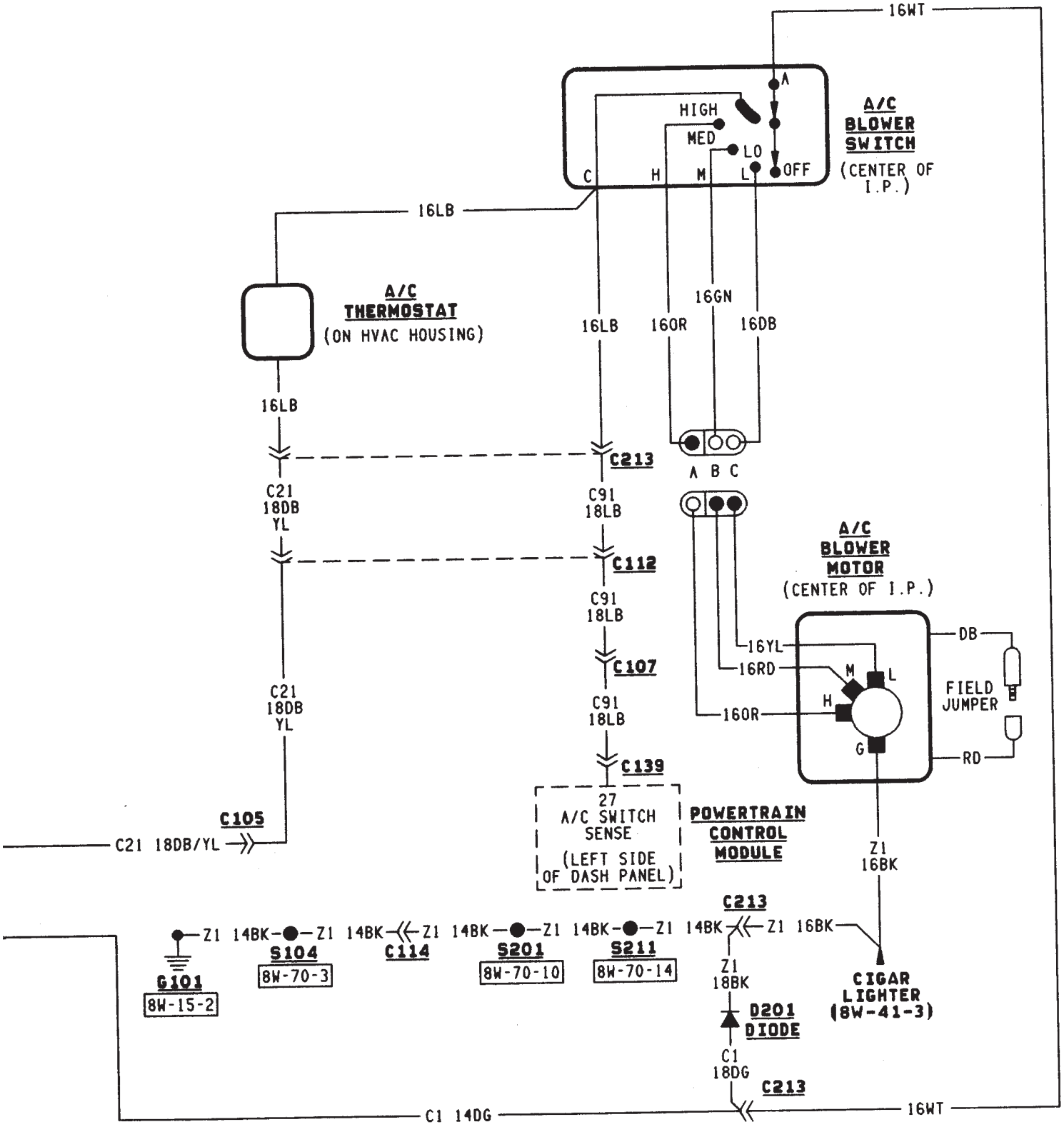
16WT
A
HIGH
MED
LO
OFF
C
H
M
L
A/C BLOWER SWITCH
(CENTER OF I.P.)
16LB
A/C THERMOSTAT
(ON HVAC HOUSING)
16LB
16GN
16OR
16DB
16LB
C213
A B C
C21 18DB YL
C91 18LB
C112
A/C BLOWER MOTOR
(CENTER OF I.P.)
C91 18LB
C107
16YL
16RD
16OR
M
L
H
G
DB
FIELD JUMPER
RD
C21 18DB YL
C91 18LB
C139
C105
C21 18DB/YL
27
A/C SWITCH SENSE
(LEFT SIDE OF DASH PANEL)
POWERTRAIN CONTROL MODULE
Z1 16BK
C213
Z1 14BK
Z1 14BK
Z1 14BK
Z1 14BK
Z1 14BK
Z1 16BK
G101
8W-15-2
S104
8W-70-3
C114
S201
8W-70-10
S211
8W-70-14
Z1 18BK
CIGAR LIGHTER (8W-41-3)
D201 DIODE
C1 18DG
C213
C1 14DG
16WT

PROVISIONS FOR A/C 2.5L ENGINE

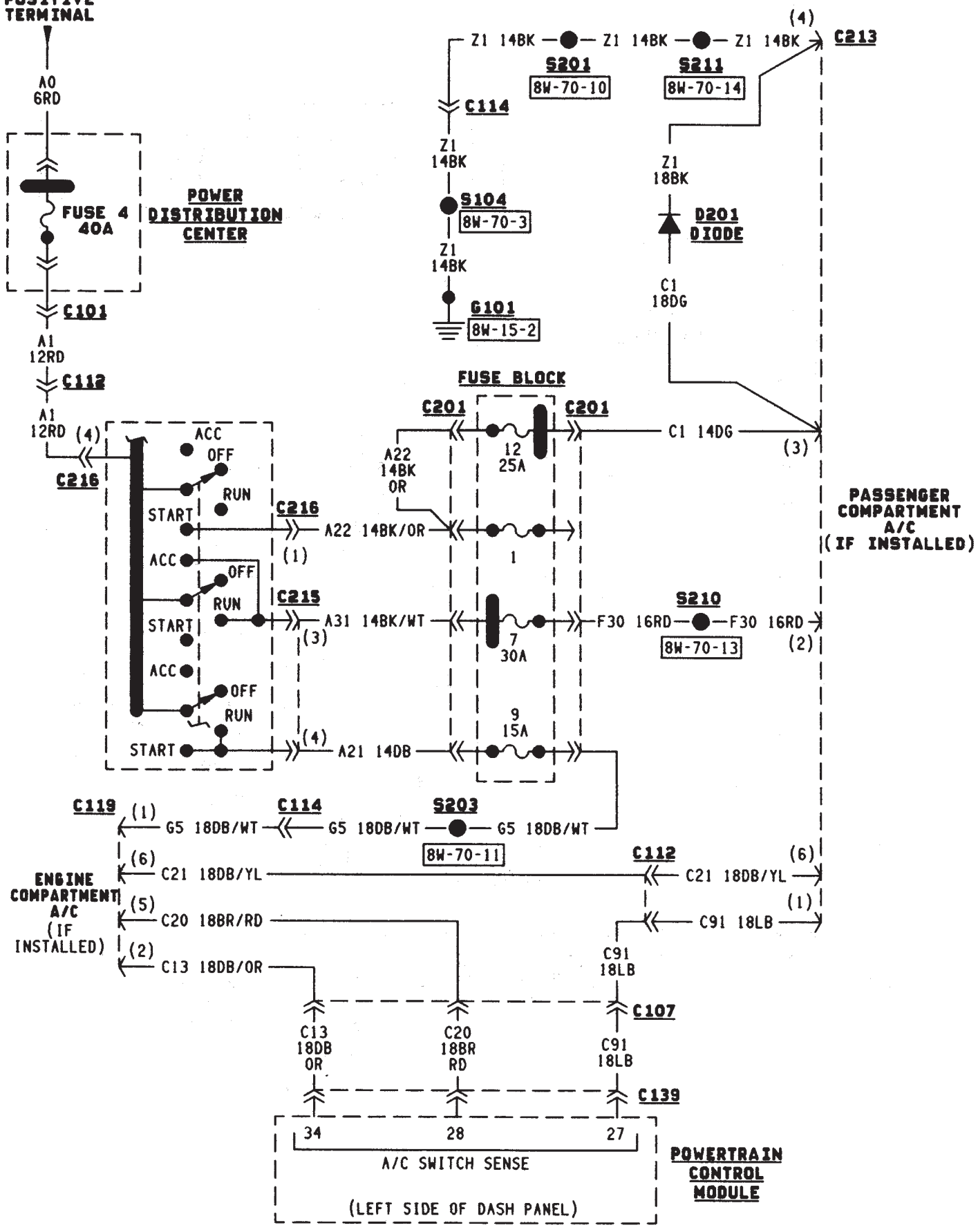

J958W-5

INTERIOR LIGHTING

INDEX

page

Accessory Lamp and Heater Control Panel Lamp . . 1
Combination Buzzer 1
Courtesy Lamps and Dome Lamps 1
Diagram Index 2
General Information 1
Transmission Range Lamp 1
Underhood Lamp 1

GENERAL INFORMATION

Circuit M1 supplies power to the underhood lamp, dome lamp, right courtesy lamp and left courtesy lamp. Fuse 12 in the Power Distribution Center (PDC) protects circuit M1. Circuit A4 from fuse 8 in the PDC supplies voltage to fuse 12 and circuit M1. Fuse 12 is referred to as the Ignition Off Draw (IOD) fuse.

COURTESY LAMPS AND DOME LAMPS

Circuit M1 supplies battery voltage to the dome lamps and the right and left courtesy lamps. Circuit M2 provides ground for the lamps through either the case grounded door jamb switches or through the dimmer switch to circuit Z1.

In the ON position, the dimmer switch connects circuit M2 to ground on circuit Z1. When a door opens, the case grounded door jamb switch closes and provides ground for the lamps on circuit M2.

HELPFUL INFORMATION

- Circuit M1 also supplies voltage for radio memory, underhood lamp and the ABS data link connector.

UNDERHOOD LAMP

Circuit M1 supplies battery voltage for the underhood lamp. A mercury switch in series after the lamp connects the lamp to ground on circuit Z1. When the hood is raised, mercury inside the switch moves to a position where it connects circuit M1 to circuit Z1, illuminating the lamp. The underhood lamp is wired in parallel with other components on circuit M1.

ACCESSORY LAMP AND HEATER CONTROL PANEL LAMP

Circuit E1 from the dimmer switch supplies battery voltage to fuse 10 in the fuse block when the dimmer switch is in the LOW or ON position. Fuse 10 protects circuit E2 which supplies power to the heater control panel lamp and the accessory lamp. Circuit Z1 provides ground for each lamp.

TRANSMISSION RANGE LAMP

Circuit E1 from the dimmer switch supplies battery voltage to fuse 10 in the fuse block when the dimmer switch is in the LOW or ON positions. Fuse 10 protects circuit E2 which supplies power to the transmission range lamp. The lamp is case grounded.

COMBINATION BUZZER

The combination buzzer module sounds an audible warning tone. The tone sounds for seat belt warning and when the key is in the ignition switch while the drivers door is open. The tone also sounds when the ignition switch is in the ON position while the drivers side seat belt is not buckled. Refer to Group 8U for buzzer operation.

Fuses 3 and 9 in the fuse block protect the combination buzzer. Fuse 3 powers circuit F32 which connects to the buzzer. Circuit A6 from fuse 3 in the Power Distribution Center (PDC) supplies power to the fuse block for circuit F32.

Circuit G5 from fuse 9 also provides voltage to the combination buzzer when the ignition switch is in the START or RUN position. The ignition switch connects circuit A1 from fuse 4 in the PDC to circuit A21. Circuit A21 connects to the fuse block.

When the key-in switch closes, it connects circuit G26 to circuit G16. Circuit G16 connects to the drivers side door jamb switch. When the drivers side door is open and the key-in switch is closed, the case grounded door jamb switch closes and supplies ground for the buzzer. Circuit G26 from the combination buzzer connects to the key-in switch.

Circuit G13 form the buzzer powers the seat belt warning lamp in the instrument cluster. Circuit Z1 at the instrument cluster provides ground for the lamp.

Circuit G10 from the buzzer connects to the seat belt switch. When the seat belt is unlatched, the seat belt switch closes providing ground on circuit Z1.

Circuit Z1 also grounds the combination buzzer module.

HELPFUL INFORMATION

- Circuit F32 also powers the stop lamp switch.
- Circuit G5 also provides power for the instrument cluster gauges and warning lamps, heated rear window relay and A/C compressor clutch relay. On Cana-

dian vehicles, circuit G5 also powers the Daytime Running Lamps (DRL) module.

DIAGRAM INDEX

Component	Page
Combination Buzzer	8W-44-5
Courtesy Lamps	8W-44-4
Dome Lamps	8W-44-4
Door Jamb Switches	8W-44-4
Fuse 3 (Fuse Block)	8W-44-5
Fuse 3 (PDC)	8W-44-3, 5
Fuse 4 (PDC)	8W-44-5
Fuse 8 (Fuse Block)	8W-44-3
Fuse 8 (PDC)	8W-44-4
Fuse 9 (Fuse Block)	8W-44-5
Fuse 10 (Fuse Block)	8W-44-3
Fuse 12 (PDC)	8W-44-4
Headlamp Switch	8W-44-3
Ignition Switch	8W-44-5
Illumination Lamps	8W-44-3
Key-In Switch	8W-44-5
Panel Lamp Dimmer Switch	8W-44-3, 4
Seat Belt Switch	8W-44-5
Underhood Lamp	8W-44-4

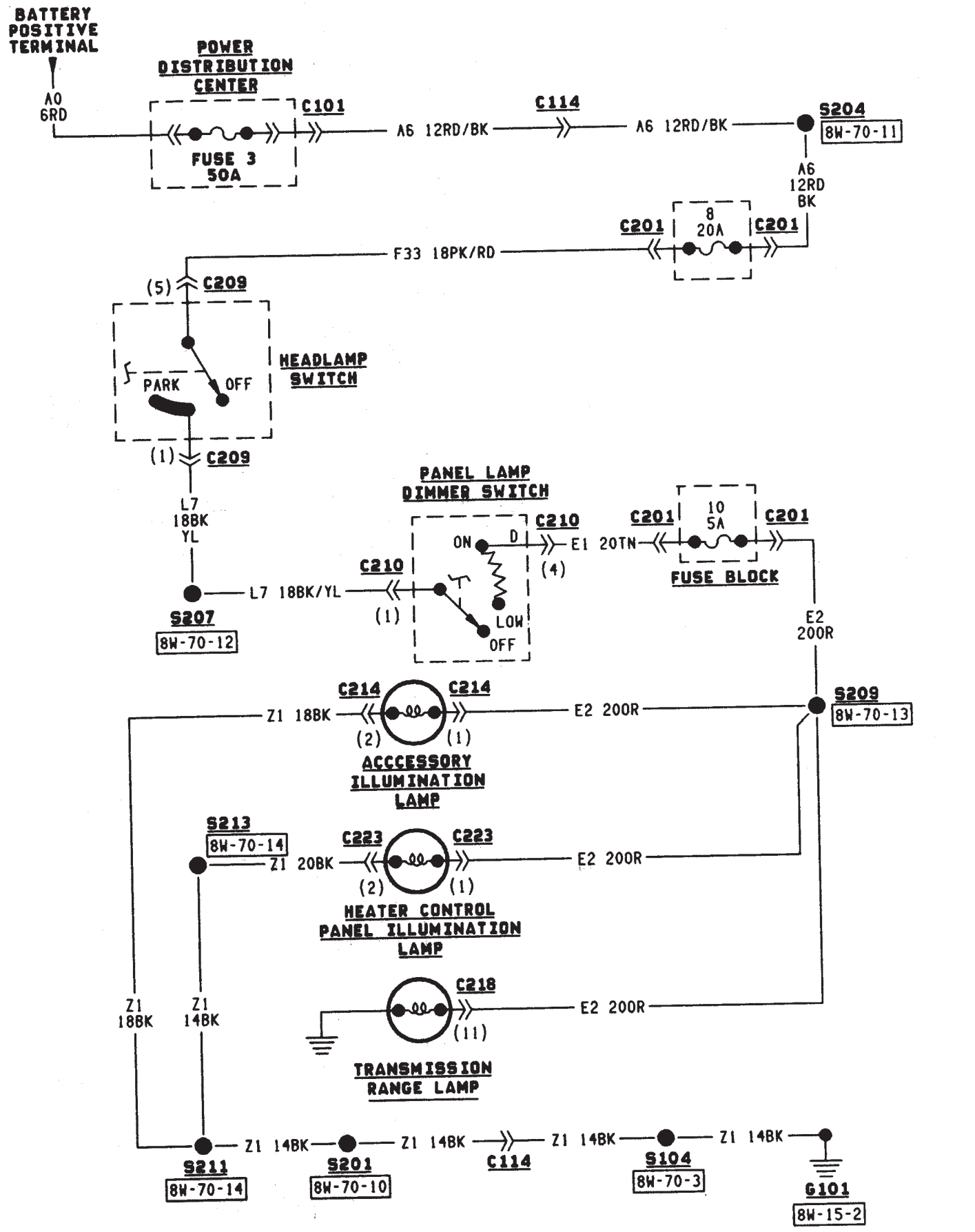
BATTERY POSITIVE TERMINAL
A0 6RD
POWER DISTRIBUTION CENTER
C101
FUSE 3 50A
A6 12RD/BK
C114
A6 12RD/BK
S204
8W-70-11
A6 12RD BK
C201
8 20A
C201
F33 18PK/RD
(5) C209
HEADLAMP SWITCH
PARK
OFF
(1) C209
L7 18BK YL
S207
8W-70-12
L7 18BK/YL
PANEL LAMP DIMMER SWITCH
C210
ON
D
E1 20TN
(4)
C210
(1)
LOW
OFF
C201
10 5A
C201
FUSE BLOCK
E2 200R
C214
C214
Z1 18BK
E2 200R
(2)
(1)
ACCCESSORY ILLUMINATION LAMP
S209
8W-70-13
S213
8W-70-14
Z1 20BK
C223
C223
E2 200R
(2)
(1)
HEATER CONTROL PANEL ILLUMINATION LAMP
Z1 18BK
Z1 14BK
C218
E2 200R
(11)
TRANSMISSION RANGE LAMP
Z1 14BK
Z1 14BK
Z1 14BK
Z1 14BK
S211
8W-70-14
S201
8W-70-10
C114
S104
8W-70-3
G101
8W-15-2

J958W-5

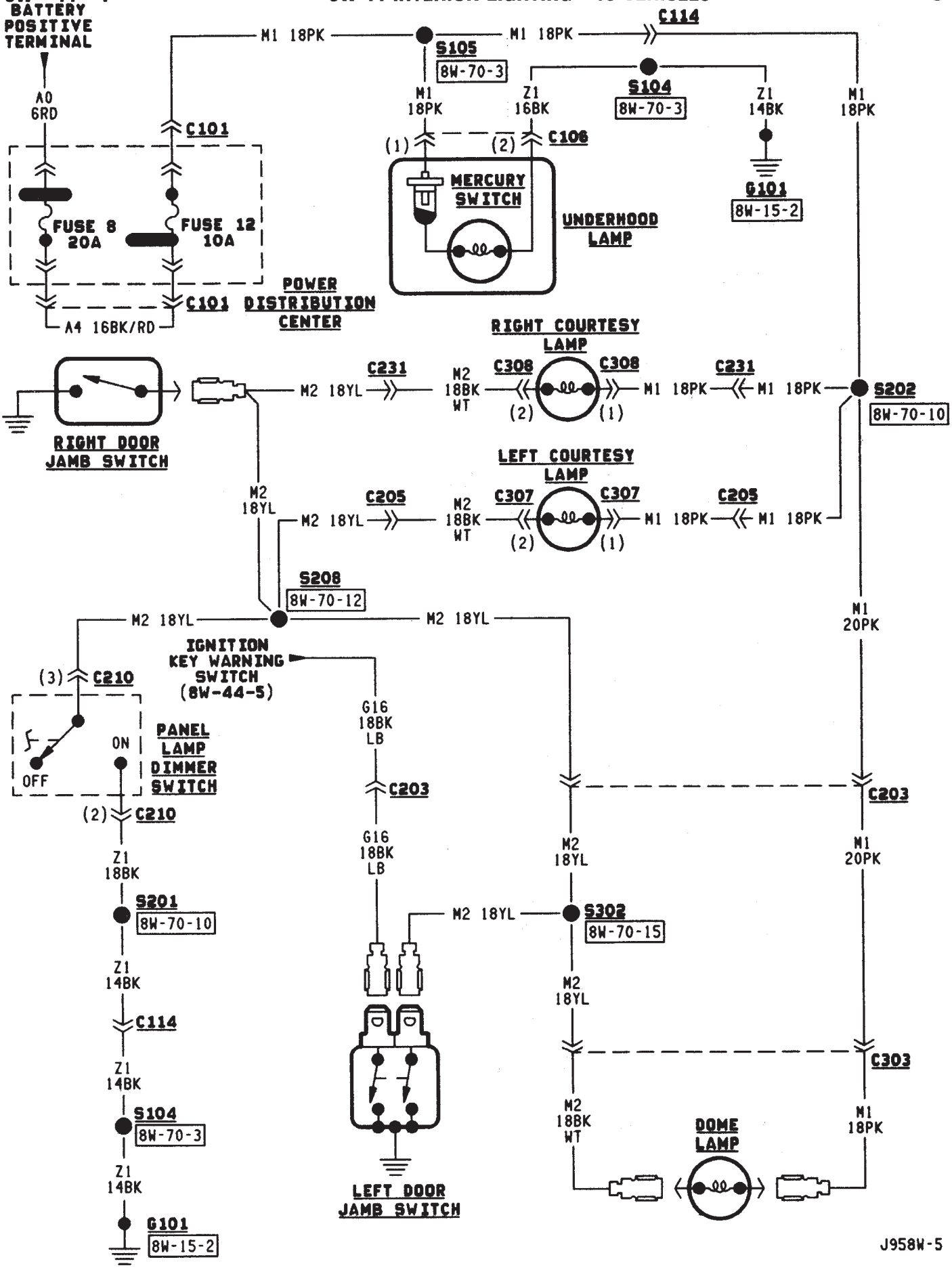
BATTERY POSITIVE TERMINAL
A0 6RD
M1 18PK
S105
8W-70-3
C114
S104
8W-70-3
Z1 16BK
Z1 14BK
G101
8W-15-2
C101
FUSE 8 20A
FUSE 12 10A
POWER DISTRIBUTION CENTER
A4 16BK/RD
C106
MERCURY SWITCH
UNDERHOOD LAMP
RIGHT COURTESY LAMP
C231
M2 18YL
M2 18BK WT
C308
M1 18PK
S202
8W-70-10
RIGHT DOOR JAMB SWITCH
LEFT COURTESY LAMP
C205
C307
S208
8W-70-12
M1 20PK
IGNITION KEY WARNING SWITCH (8W-44-5)
C210
PANEL LAMP DIMMER SWITCH
ON
OFF
G16 18BK LB
C203
S201
8W-70-10
S302
8W-70-15
C303
DOME LAMP
LEFT DOOR JAMB SWITCH

J958W-5

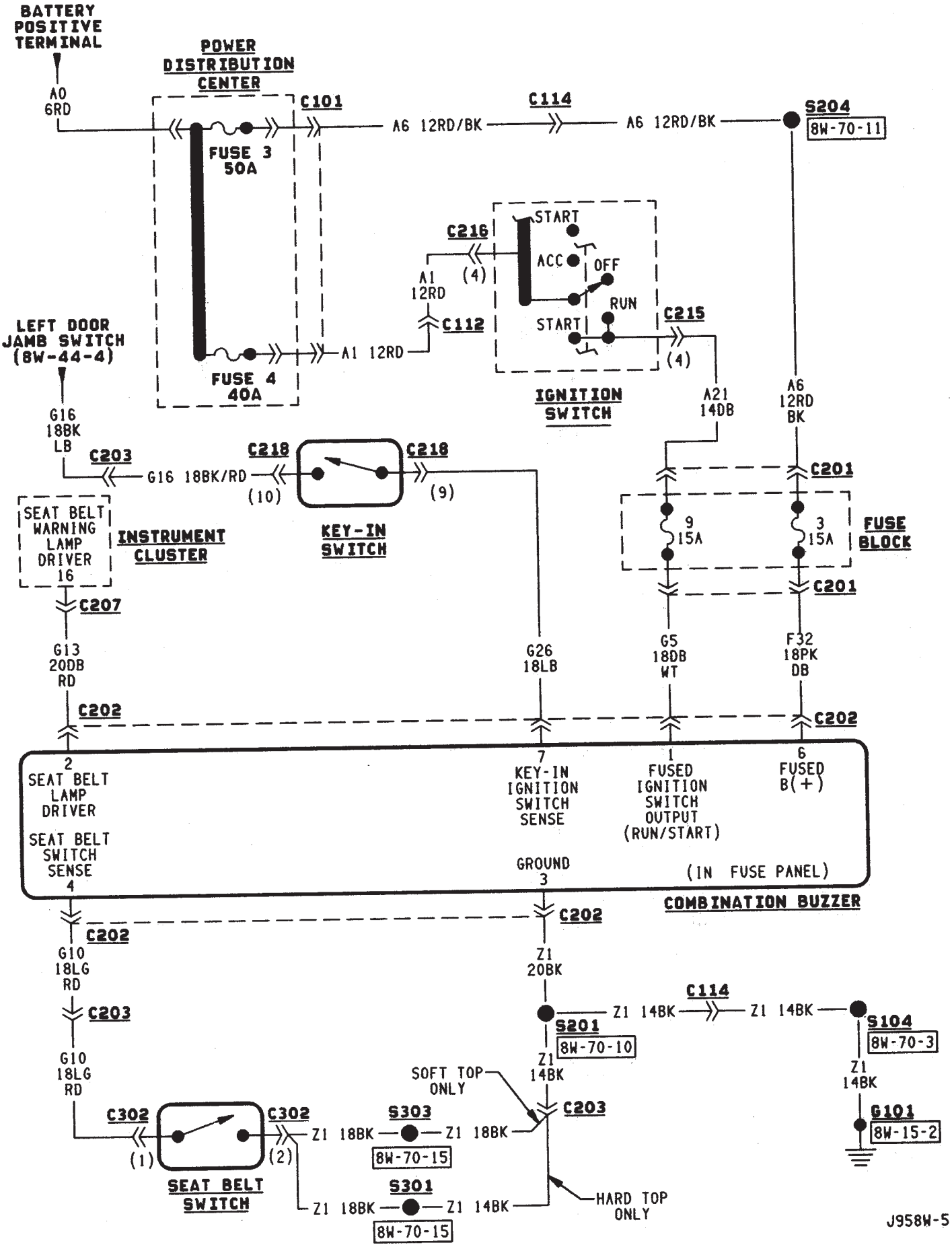
BATTERY POSITIVE TERMINAL
A0 6RD
POWER DISTRIBUTION CENTER
C101
FUSE 3 50A
FUSE 4 40A
A6 12RD/BK
C114
A6 12RD/BK
S204
8W-70-11
C216
A1 12RD
(4)
C112
A1 12RD
START
ACC
OFF
RUN
START
C215
(4)
IGNITION SWITCH
A21 14DB
A6 12RD BK
LEFT DOOR JAMB SWITCH (8W-44-4)
G16 18BK LB
C203
G16 18BK/RD
C218
(10)
C218
(9)
KEY-IN SWITCH
C201
SEAT BELT WARNING LAMP DRIVER 16
INSTRUMENT CLUSTER
9 15A
3 15A
FUSE BLOCK
C201
C207
G13 20DB RD
G26 18LB
G5 18DB WT
F32 18PK DB
C202
C202
2 SEAT BELT LAMP DRIVER
SEAT BELT SWITCH SENSE 4
7 KEY-IN IGNITION SWITCH SENSE
1 FUSED IGNITION SWITCH OUTPUT (RUN/START)
6 FUSED B(+)
GROUND 3
(IN FUSE PANEL)
COMBINATION BUZZER
C202
C202
G10 18LG RD
Z1 20BK
C114
C203
Z1 14BK
C114
Z1 14BK
S104
8W-70-3
S201
8W-70-10
G10 18LG RD
Z1 14BK
Z1 14BK
SOFT TOP ONLY
C302
C302
(1)
(2)
SEAT BELT SWITCH
S303
Z1 18BK
Z1 18BK
8W-70-15
C203
G101
8W-15-2
S301
Z1 18BK
Z1 14BK
8W-70-15
HARD TOP ONLY
J958W-5

RADIO

RADIO MEMORY

Circuit M1 from the Ignition Off Draw (IOD) fuse in the Power Distribution Center (PDC) supplies power for the radio memory. The IOD fuse is removed during vehicle shipping to prevent excessive battery draw.

Circuit A4 from fuse 8 in the PDC supplies voltage to the IOD fuse in cavity 12. Circuit A4 is HOT at all times.

RADIO ILLUMINATION

Circuit E2 supplies battery voltage to the radio illumination lamps when the headlamps or parking lamps are ON and the dimmer switch is in the LOW or ON positions.

Circuit E22 supplies battery voltage for the radio clock and station frequency display. Circuit E22 originates at the radio illumination relay and is fed by either circuit F30 or circuit E2 depending on the switch position inside the relay.

When the headlamps and parking lamps are OFF, the radio illumination relay is in its normal At-Rest position. In the At Rest position, the relay connects circuit F30 from fuse 7 in the fuse block to circuit E22.

When the headlamps or parking lamps are ON, circuit L7 from the headlamp switch supplies battery voltage to the coil side of the radio illumination relay. Circuit Z1 provides ground for the coil side of the relay.

When voltage is present on circuit L7, the radio illumination relay switches from its at rest position to connect circuit E2 to circuit E22.

HELPFUL INFORMATION

- Circuit A31 supplies voltage to the fuse block for circuit F30 when the ignition switch is in the ACCESSORY or RUN positions. In these positions the ignition switch connects circuit A1 from fuse 4 in the PDC to circuit A31. Circuit A31 powers a bus bar in the fuse block that feeds circuit F30 through fuse 7.
- Circuit A6 from fuse 3 in the PDC supplies power to the fuse block for fuse 8. Fuse 8 protects circuit F33. When the headlamps or parking lamps are ON, the headlamp switch connects circuit F33 to circuit L7. When the adjustable dimmer switch is in the LOW to ON positions, it connects circuit L7 to circuit E1. Circuit E1 powers fuse 10 in the fuse block. Fuse 10 in the fuse block protects circuit E2.

SPEAKERS

Circuit X53 feeds the speaker on the left side of the instrument panel. Circuit X55 is the return from the speaker to the radio.

Circuit X54 feeds the right instrument panel speaker. Circuit X56 is the return from the speaker to the radio.

The speaker feed and return circuits are double crimped at the front speakers and continue to the connector for the rear speakers. If the vehicle is not equipped with the rear speaker sound bar, a jumper is installed in the harness to simulate rear speaker load.

Circuit X51 feeds the left rear speaker. Circuit X57 is the return from the speaker to the radio.

Circuit X52 feeds the right rear speaker. Circuit X58 is the return from the speaker to the radio.

DIAGRAM INDEX

Component	Page
Fuse 3 (PDC)	8W-47-3
Fuse 4 (PDC)	8W-47-2
Fuse 7 (Fuse Block)	8W-47-2
Fuse 8 (Fuse Block)	8W-47-3
Fuse 8 (PDC)	8W-47-2
Fuse 10 (Fuse Block)	8W-47-3
Fuse 12 (PDC)	8W-47-2
Headlamp Switch	8W-47-3
Ignition Switch	8W-47-2
Left Front Speaker	8W-47-4
Left Rear Speaker	8W-47-5
Panel Lamp Dimmer Switch	8W-47-3
Radio	8W-47-2, 3, 4
Radio Illumination Relay	8W-47-2
Right Front Speaker	8W-47-4
Right Rear Speaker	8W-47-5

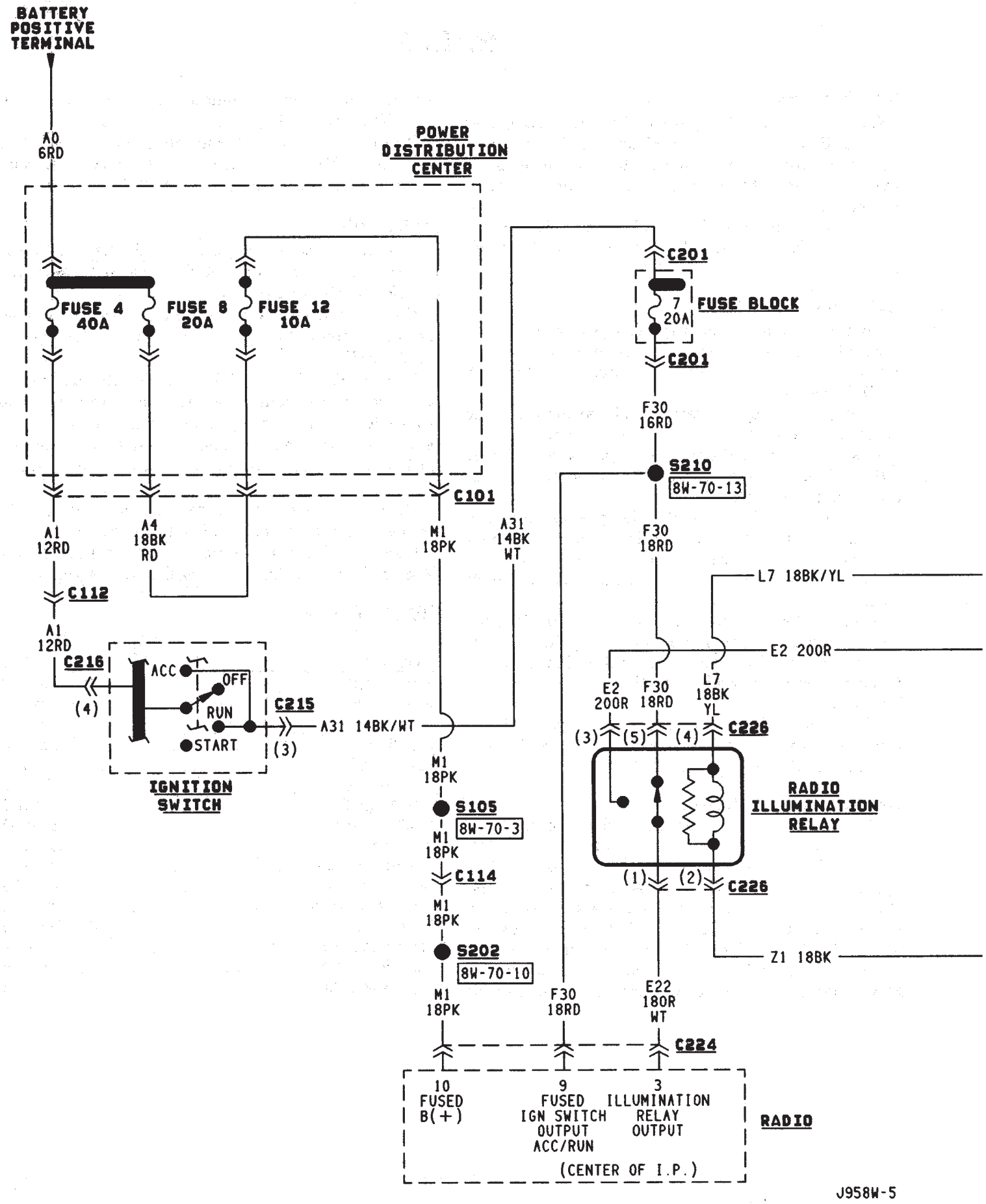
BATTERY POSITIVE TERMINAL
A0 6RD
POWER DISTRIBUTION CENTER
FUSE 4 40A
FUSE 8 20A
FUSE 12 10A
C101
A1 12RD
A4 18BK RD
M1 18PK
A31 14BK WT
C112
A1 12RD
C216
(4)
ACC
OFF
RUN
START
C215
(3)
A31 14BK/WT
IGNITION SWITCH
M1 18PK
S105
8W-70-3
M1 18PK
C114
M1 18PK
S202
8W-70-10
M1 18PK
C201
7 20A
FUSE BLOCK
C201
F30 16RD
S210
8W-70-13
F30 18RD
L7 18BK/YL
E2 200R
E2 200R
F30 18RD
L7 18BK YL
(3)
(5)
(4)
C226
RADIO ILLUMINATION RELAY
(1)
(2)
C226
Z1 18BK
F30 18RD
E22 180R WT
C224
10 FUSED B(+)
9 FUSED IGN SWITCH OUTPUT ACC/RUN
3 ILLUMINATION RELAY OUTPUT
(CENTER OF I.P.)
RADIO
J958W-5

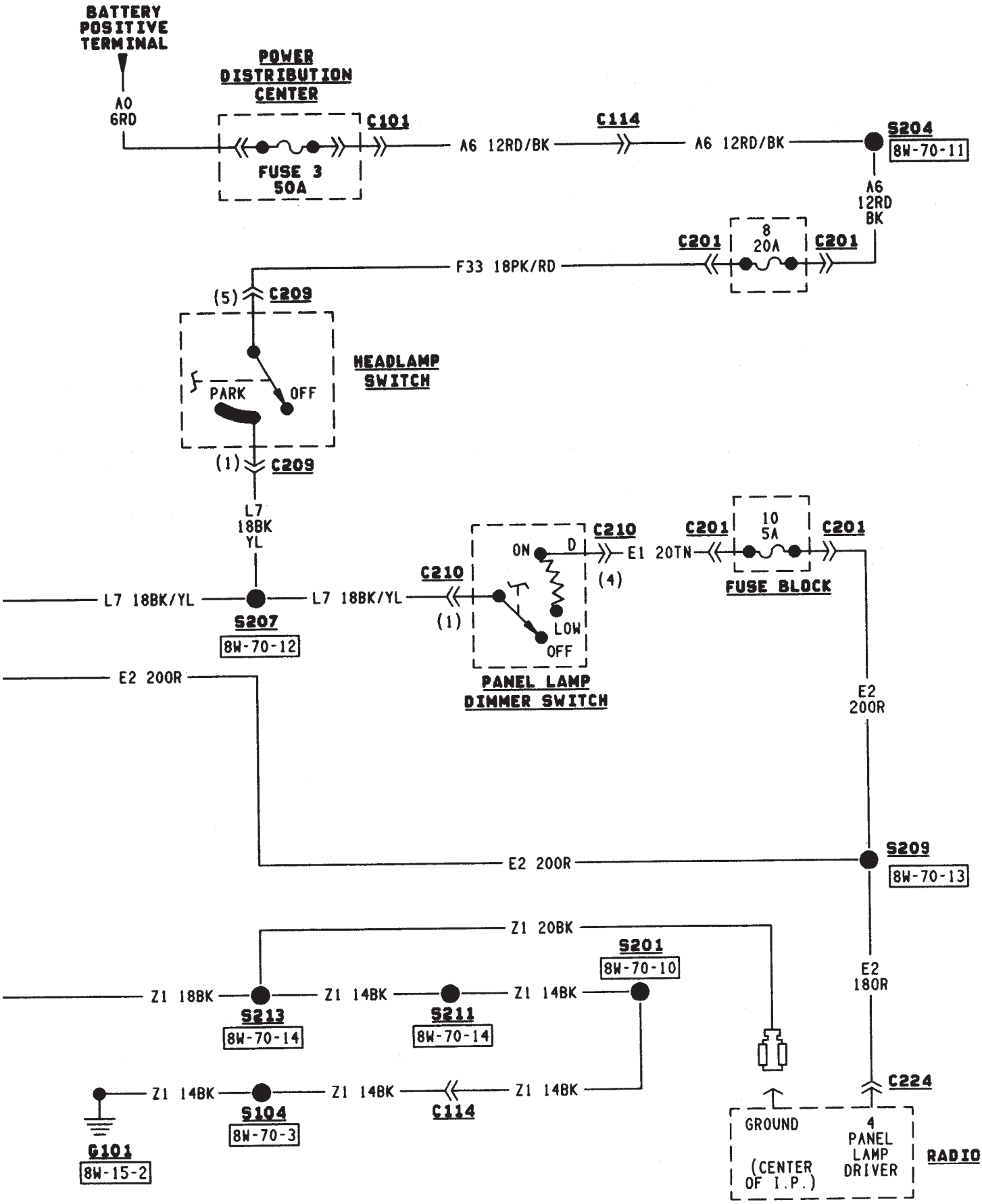
BATTERY POSITIVE TERMINAL
A0 6RD
POWER DISTRIBUTION CENTER
C101
FUSE 3 50A
A6 12RD/BK
C114
A6 12RD/BK
S204
8W-70-11
A6 12RD BK
C201
8 20A
C201
F33 18PK/RD
(5)
C209
HEADLAMP SWITCH
PARK
OFF
(1)
C209
L7 18BK YL
L7 18BK/YL
S207
8W-70-12
L7 18BK/YL
C210
ON
D
E1 20TN
(4)
C210
(1)
LOW
OFF
PANEL LAMP DIMMER SWITCH
C201
10 5A
C201
FUSE BLOCK
E2 200R
E2 200R
E2 200R
S209
8W-70-13
Z1 20BK
S201
8W-70-10
Z1 18BK
Z1 14BK
Z1 14BK
S213
8W-70-14
S211
8W-70-14
E2 180R
Z1 14BK
Z1 14BK
Z1 14BK
S104
8W-70-3
C114
C224
G101
8W-15-2
GROUND
(CENTER OF I.P.)
4
PANEL LAMP DRIVER
RADIO

J958W-5

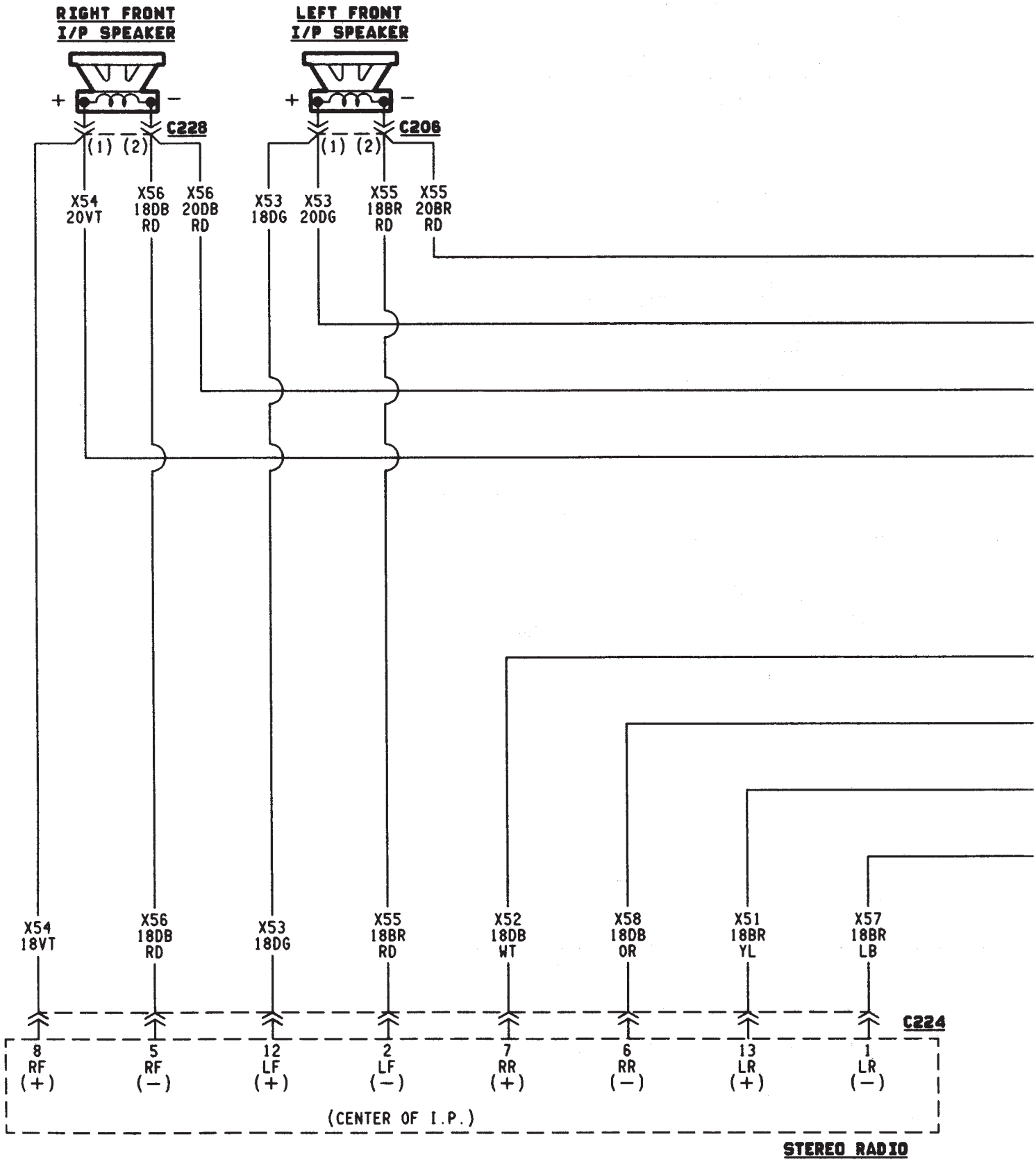
RIGHT FRONT
I/P SPEAKER
LEFT FRONT
I/P SPEAKER
+
−
C228
(1) (2)
C206
X54
20VT
X56
18DB
RD
X56
20DB
RD
X53
18DG
X53
20DG
X55
18BR
RD
X55
20BR
RD
X54
18VT
X56
18DB
RD
X53
18DG
X55
18BR
RD
X52
18DB
WT
X58
18DB
OR
X51
18BR
YL
X57
18BR
LB
C224
8
RF
(+)
5
RF
(−)
12
LF
(+)
2
LF
(−)
7
RR
(+)
6
RR
(−)
13
LR
(+)
1
LR
(−)
(CENTER OF I.P.)
STEREO RADIO

J958W-5

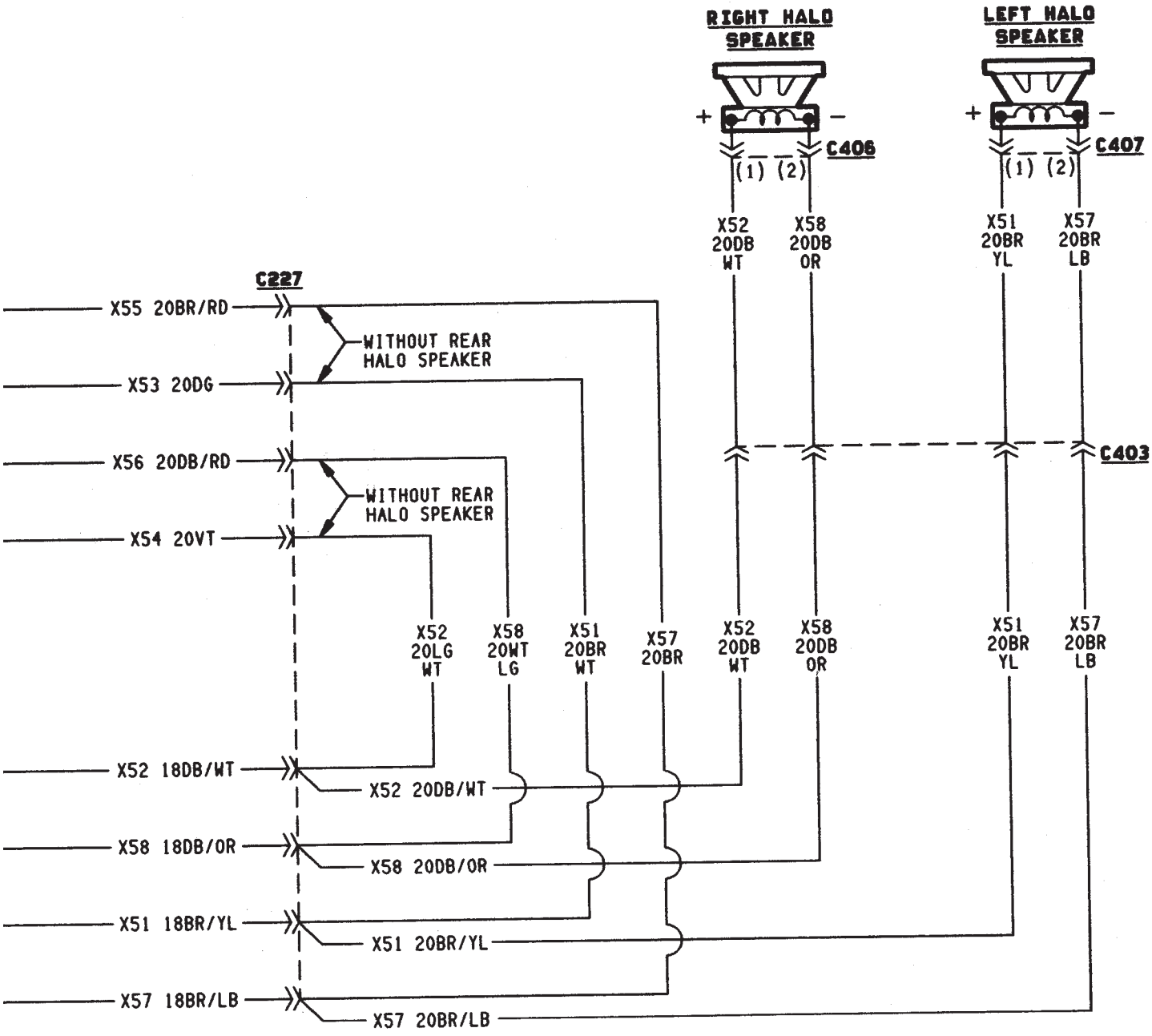
RIGHT HALO SPEAKER
LEFT HALO SPEAKER
+
−
C406
C407
(1) (2)
X52 20DB WT
X58 20DB OR
X51 20BR YL
X57 20BR LB
C227
C403
X55 20BR/RD
X53 20DG
X56 20DB/RD
X54 20VT
WITHOUT REAR HALO SPEAKER
WITHOUT REAR HALO SPEAKER
X52 20LG WT
X58 20WT LG
X51 20BR WT
X57 20BR
X52 18DB/WT
X58 18DB/OR
X51 18BR/YL
X57 18BR/LB
X52 20DB/WT
X58 20DB/OR
X51 20BR/YL
X57 20BR/LB

HEATED REAR WINDOW

HEATED REAR WINDOW

The heated rear window relay supplies power to heated rear window grid. When the operator presses the heated rear window switch, the contacts inside the switch momentarily close and circuit C16 connects the relay timer to ground on circuit Z1. This causes the relay to change state and complete a circuit to energize the coil side of the relay and start the relay timer. Circuit G5 from fuse 9 in the fuse block supplies voltage to the coil side of the relay. Circuit Z1 provides ground for the relay.

When the heated rear window relay energizes, the contacts inside the relay close and connect circuit F32 to circuit C15. Fuse 3 in the fuse block protects circuit F32.

Circuit C15 is double crimped at the heated rear window relay. One branch of circuit C15 powers the indicator lamp in the heated rear window switch. The other branch of circuit C15 powers the heated rear window grid. Circuit Z1 provides ground for the heated rear window grid.

At the rear window grid, circuits C15 and Z1 pass through lift gate support struts.

HELPFUL INFORMATION

- When the ignition switch is in the START or RUN positions, it connects circuit A1 from fuse 4 in the Power Distribution Center (PDC) to circuit A21. Circuit A21 supplies battery voltage to the fuse block bus bar that powers circuit G5 through the fuse in cavity 9.
- Circuit A6 from PDC fuse 3 supplies battery voltage to the fuse block bus bar that feeds fuse 3 and circuit F32. Check fuse 3 in the PDC and fuse 3 in the fuse block.
- Check for broken grid lines on the window.
- Check for a broken bus bar or disconnected leads at the rear window.
- Check for a good ground.

DIAGRAM INDEX

Component	Page
Fuse 3 (PDC)	8W-48-2
Fuse 4 (PDC)	8W-48-2
Fuse 6 (Fuse Block)	8W-48-2
Fuse 9 (Fuse Block)	8W-48-2
Heated Rear Window Relay	8W-48-2
Heated Rear Window Grid	8W-48-3
Heated Rear Window Switch	8W-48-3

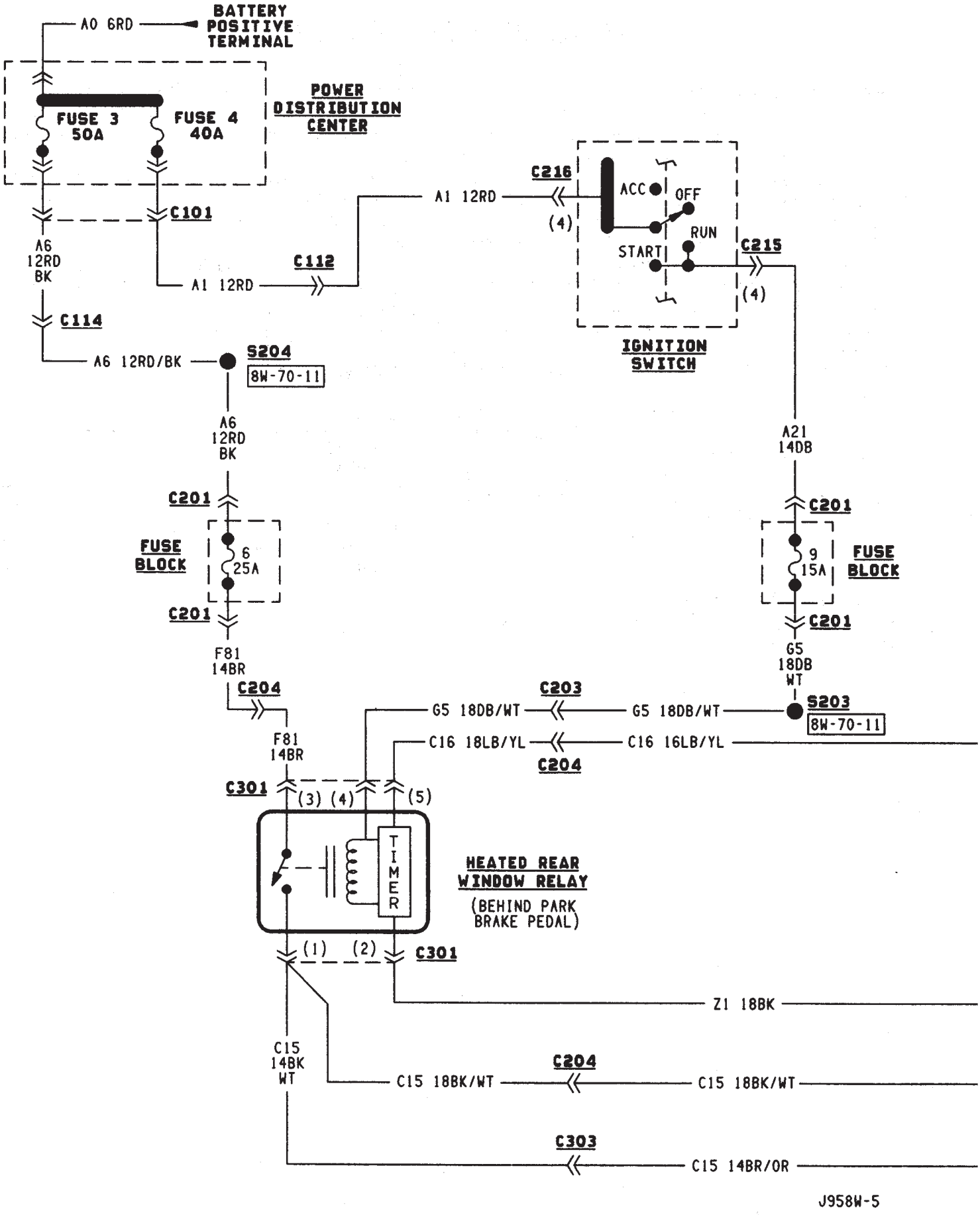
A0 6RD
BATTERY POSITIVE TERMINAL
FUSE 3 50A
FUSE 4 40A
POWER DISTRIBUTION CENTER
C101
A6 12RD BK
C114
A6 12RD/BK
S204
8W-70-11
C112
A1 12RD
C216
(4)
ACC
OFF
RUN
START
C215
(4)
IGNITION SWITCH
A6 12RD BK
C201
FUSE BLOCK
6 25A
C201
F81 14BR
C204
A21 14DB
C201
9 15A
FUSE BLOCK
C201
G5 18DB WT
S203
8W-70-11
G5 18DB/WT
C203
G5 18DB/WT
C16 18LB/YL
C204
C16 16LB/YL
F81 14BR
C301
(3) (4) (5)
TIMER
HEATED REAR WINDOW RELAY
(BEHIND PARK BRAKE PEDAL)
(1) (2)
C301
Z1 18BK
C15 14BK WT
C15 18BK/WT
C204
C15 18BK/WT
C303
C15 14BR/OR
J958W-5

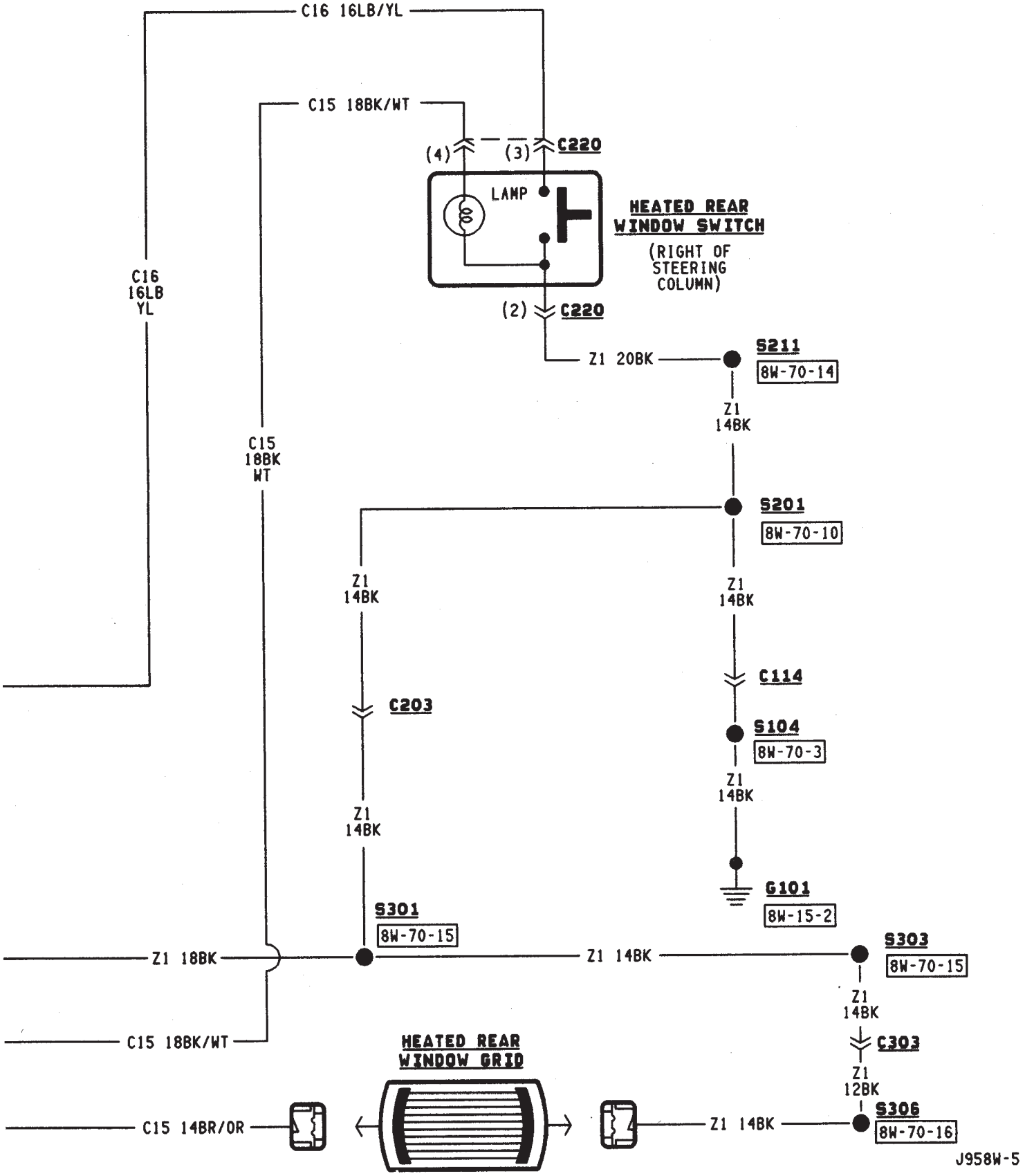
C16 16LB/YL
C15 18BK/WT
(4)
(3)
C220
LAMP
HEATED REAR WINDOW SWITCH
(RIGHT OF STEERING COLUMN)
C16 16LB YL
(2)
C220
Z1 20BK
S211
8W-70-14
Z1 14BK
C15 18BK WT
S201
8W-70-10
Z1 14BK
Z1 14BK
C114
C203
S104
8W-70-3
Z1 14BK
Z1 14BK
G101
8W-15-2
S301
8W-70-15
Z1 18BK
Z1 14BK
S303
8W-70-15
Z1 14BK
C15 18BK/WT
C303
HEATED REAR WINDOW GRID
Z1 12BK
C15 14BR/OR
Z1 14BK
S306
8W-70-16
J958W-5

FRONT LIGHTING

INDEX

page

Daytime Running Lamp (DRL) Module—Canadian Vehicles Only 2
Diagram Index 2
Fog Lamps 1
Headlamps 1
Parking Lamps 1

HEADLAMPS

The headlamp switch has three positions: ON, PARK (parking lamps) and OFF. Two circuits, L2 and L20, connect the headlamp switch to the headlamp dimmer/optical horn switch. The dimmer switch feeds the low and high beams of the headlamps.

HEADLAMP SWITCH IN OFF OR PARKING LAMP POSITION

Circuit A3 from fuse 7 in the Power Distribution Center (PDC) supplies battery voltage to the headlamp switch. The headlamp switch has an internal circuit breaker that connects circuit A3 to circuit L20. The switch connects circuit A3 to circuit L2 when the headlamps are ON.

Circuit L20 connects to the dimmer switch. Circuit L20 powers the high beams of the head lamps on circuit L3 when the operator flashes the headlamps with the turn signal stalk.

HEADLAMP SWITCH IN ON POSITION

When the headlamp switch is in the ON position, the A3 circuit from the PDC connects to circuit L2. Circuit L2 connects to circuit L4 through the dimmer switch. Circuit L4 powers the low beam of the headlamps.

When the operator selects high beam operation with the turn signal stalk, the dimmer switch connects circuit L20 to circuit L3. Circuit L3 supplies battery voltage to the high beams.

HEADLAMP GROUND

Although circuit Z1 provides ground for both the right and left headlamps, it has different termination points for each. For the right headlamp, the Z1 circuit terminates at the radiator right support. For the left headlamp, the Z1 circuit terminates at the left radiator support.

HELPFUL INFORMATION

- Check fuse 7 in the PDC.
- The headlamp switch has an internal circuit breaker.
- For the left front parking lamp, turn signal, side marker lamp, headlamp, and fog lamp, circuit Z1 terminates at the left radiator support.
- For the right front parking lamp, turn signal, side marker lamp, headlamp, and fog lamp, circuit Z1 terminates at the right radiator support.

PARKING LAMPS

Circuit A6 from fuse 3 in the Power Distribution Center (PDC) connects to the fuse block bus bar that powers circuit F33. Fuse 8 in the fuse block protects circuit F33. Circuit F33 connects to the headlamp switch.

The headlamp switch has three positions: ON, PARK (parking lamps) and OFF, plus a dimmer switch. When the headlamp switch is in the PARK or ON position, the switch connects circuit F33 to circuit L7. From the headlamp switch, circuit L7 branches to power the front parking lamps, rear tail lamps, and side marker lamps. Circuit L7 also powers the park lamp relay, if equipped with fog lamps.

GROUND CIRCUIT

- For the left front parking lamp, turn signal, side marker lamp, headlamp, and fog lamp, circuit Z1 terminates at the left radiator support.
- For the right front parking lamp, turn signal, side marker lamp, headlamp, and fog lamp, circuit Z1 terminates at the right radiator support.

HELPFUL INFORMATION

- Check fuse 3 in the PDC.
- Check fuse 8 in the fuse block.
- Circuit L7 also feeds the radio, if equipped.

FOG LAMPS

The fog lamps are controlled by the fog lamp switch and two relays. The fog lamps operate only when the headlamp switch is in the ON position, and the operator has selected low-beam operation. When the headlamps are in high-beam operation, the fog lamps will not operate.

When the headlamps or parking lamps are ON, circuit L7 from the headlamp switch supplies battery voltage to the coil side of the park lamp relay. When the operator presses the fog lamp switch, it provides ground for the coil side of the park lamp relay. This energizes the relay.

When the park lamp relay energizes, the relay contacts close and connect circuit F81 from fuse 6 in the fuse block to circuit L36. Circuit L36 connects to the contact side of the high beam relay. The contacts in the high beam relay are normally closed. Battery voltage flows through high beam relay to the fog lamps on circuit L39. Circuit L39 also splices to the lamp in the fog lamp switch.

Circuit L3 from the dimmer switch provides power for the high beams of the headlamps and connects to Circuit G34. Circuit G34 powers the coil side of the high beam relay. Circuit Z1 provides ground for the coil. When the operator selects high beam operation or flashes the optical horn, circuit G34 energizes the high beam relay. When energized, the normally closed contacts in the relay open, shutting off battery voltage to the fog lamps on circuit L39.

HELPFUL INFORMATION

- Circuit A6 from fuse 3 in the PDC supplies voltage to the fuse block for fuses in cavities 3 and 6. Fuse 6 in the fuse block protects circuit F81 which powers the contact side of the park lamp relay.
- In the high beam position, the dimmer switch connects circuit L20 from the headlamp switch to circuit L3. The headlamp switch connects circuit A3 from fuse 7 in the PDC with circuit L20. Circuits A3 and L20 are HOT at all times.

DAYTIME RUNNING LAMP (DRL) MODULE—CANADIAN VEHICLES ONLY

On Canadian vehicles, the low-beam headlamps operate when the ignition switch is in the RUN position and the headlamp switch is OFF.

When the ignition switch is in the START or RUN positions, circuit A1 from fuse 4 in the Power Distribution Center (PDC) connects to circuit A21. Circuit A21 supplies voltage to circuit G5 through fuse 9 in the fuse block. Circuit G5 splices to supply battery voltage to the DRL module.

Circuit L20 from the headlamp switch connects to the DRL module. Circuit L20 is HOT at all times.

The DRL module receives the vehicle speed sensor input from circuit G7. Circuit G34 from the DRL module provides power for the high beam indicator lamp in the instrument cluster.

Circuit L4 feeds the low beams of the headlamps. When the headlamp switch is in the OFF position, the DRL module powers the left and right headlamps on circuit L4. When the headlamps are ON, the dimmer switch powers the low beams on circuit L4.

Circuit L3 feeds the high beams of the headlamps. When the operator flashes the high beams with the turn signal stalk, the DRL senses voltage on circuit L3. When it senses voltage on circuit L3, the DRL module stops supplying power to the low beams on circuit L4.

Circuit Z1 provides ground for the DRL module. Circuit Z1 terminates at the radiator left side support.

DIAGRAM INDEX

Component	Page
Daytime Running Lamp (DRL) Module	8W-50-3, 7, 9, 11
Fog Lamps	8W-50-9
Fog Lamp Switch	8W-50-9
Fuse 3 (PDC)	8W-50-3
Fuse 4 (PDC)	8W-50-10
Fuse 6 (Fuse Block)	8W-50-8
Fuse 7 (PDC)	8W-50-3, 10
Fuse 8 (Fuse Block)	8W-50-3
Fuse 9 (Fuse Block)	8W-50-10
Headlamp Switch	8W-50-3, 8, 10
Headlamp Dimmer Switch	8W-50-3, 8
High Beam Relay	8W-50-9
Ignition Switch	8W-50-10
Instrument Cluster	8W-50-3 thru 10
Left Headlamp	8W-50-4, 6
Left Park, Turn Signal Lamp	8W-50-4, 6
Left Side Marker Lamp	8W-50-4, 6
Park Lamp Relay	8W-50-8
Powertrain Control Module	8W-50-11
Right Headlamp	8W-50-5, 7
Right Park, Turn Signal Lamp	8W-50-5, 7
Right Side Marker Lamp	8W-50-5, 7

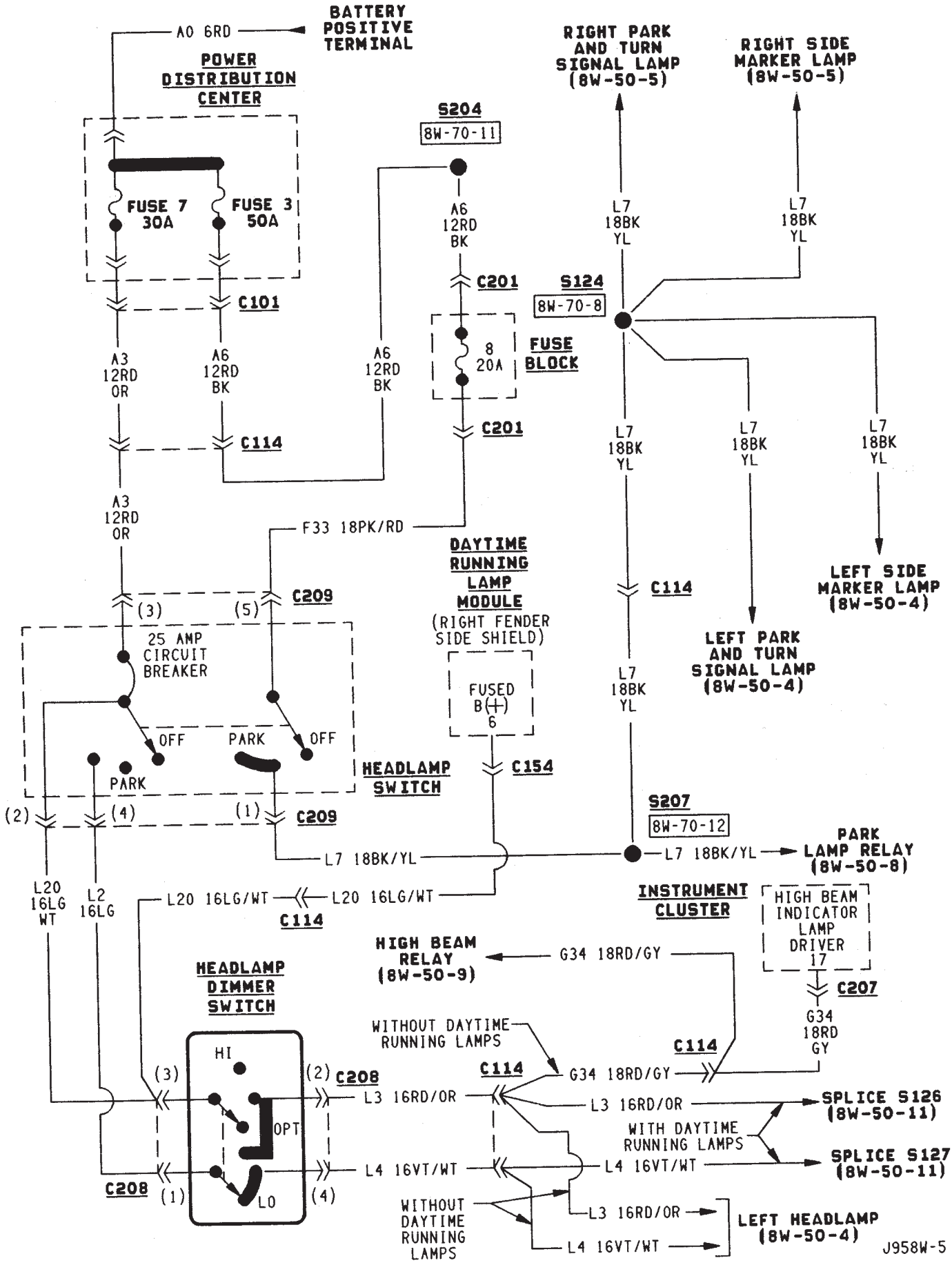
BATTERY POSITIVE TERMINAL
A0 6RD
POWER DISTRIBUTION CENTER
FUSE 7 30A
FUSE 3 50A
C101
A3 12RD OR
A6 12RD BK
C114
A3 12RD OR
S204
8W-70-11
A6 12RD BK
C201
8 20A
FUSE BLOCK
C201
A6 12RD BK
F33 18PK/RD
RIGHT PARK AND TURN SIGNAL LAMP (8W-50-5)
RIGHT SIDE MARKER LAMP (8W-50-5)
L7 18BK YL
L7 18BK YL
S124
8W-70-8
L7 18BK YL
L7 18BK YL
L7 18BK YL
C114
L7 18BK YL
LEFT SIDE MARKER LAMP (8W-50-4)
LEFT PARK AND TURN SIGNAL LAMP (8W-50-4)
DAYTIME RUNNING LAMP MODULE
(RIGHT FENDER SIDE SHIELD)
FUSED B(+) 6
C154
C209
(3)
(5)
25 AMP CIRCUIT BREAKER
OFF
PARK
OFF
PARK
HEADLAMP SWITCH
(2)
(4)
(1)
C209
S207
8W-70-12
L7 18BK/YL
L7 18BK/YL
PARK LAMP RELAY (8W-50-8)
L20 16LG WT
L2 16LG
L20 16LG/WT
L20 16LG/WT
C114
INSTRUMENT CLUSTER
HIGH BEAM INDICATOR LAMP DRIVER 17
C207
G34 18RD GY
HIGH BEAM RELAY (8W-50-9)
G34 18RD/GY
HEADLAMP DIMMER SWITCH
HI
OPT
LO
(3)
(2)
C208
(1)
(4)
C208
WITHOUT DAYTIME RUNNING LAMPS
C114
C114
G34 18RD/GY
L3 16RD/OR
L3 16RD/OR
SPLICE S126 (8W-50-11)
WITH DAYTIME RUNNING LAMPS
SPLICE S127 (8W-50-11)
L4 16VT/WT
L4 16VT/WT
WITHOUT DAYTIME RUNNING LAMPS
L3 16RD/OR
L4 16VT/WT
LEFT HEADLAMP (8W-50-4)
J958W-5

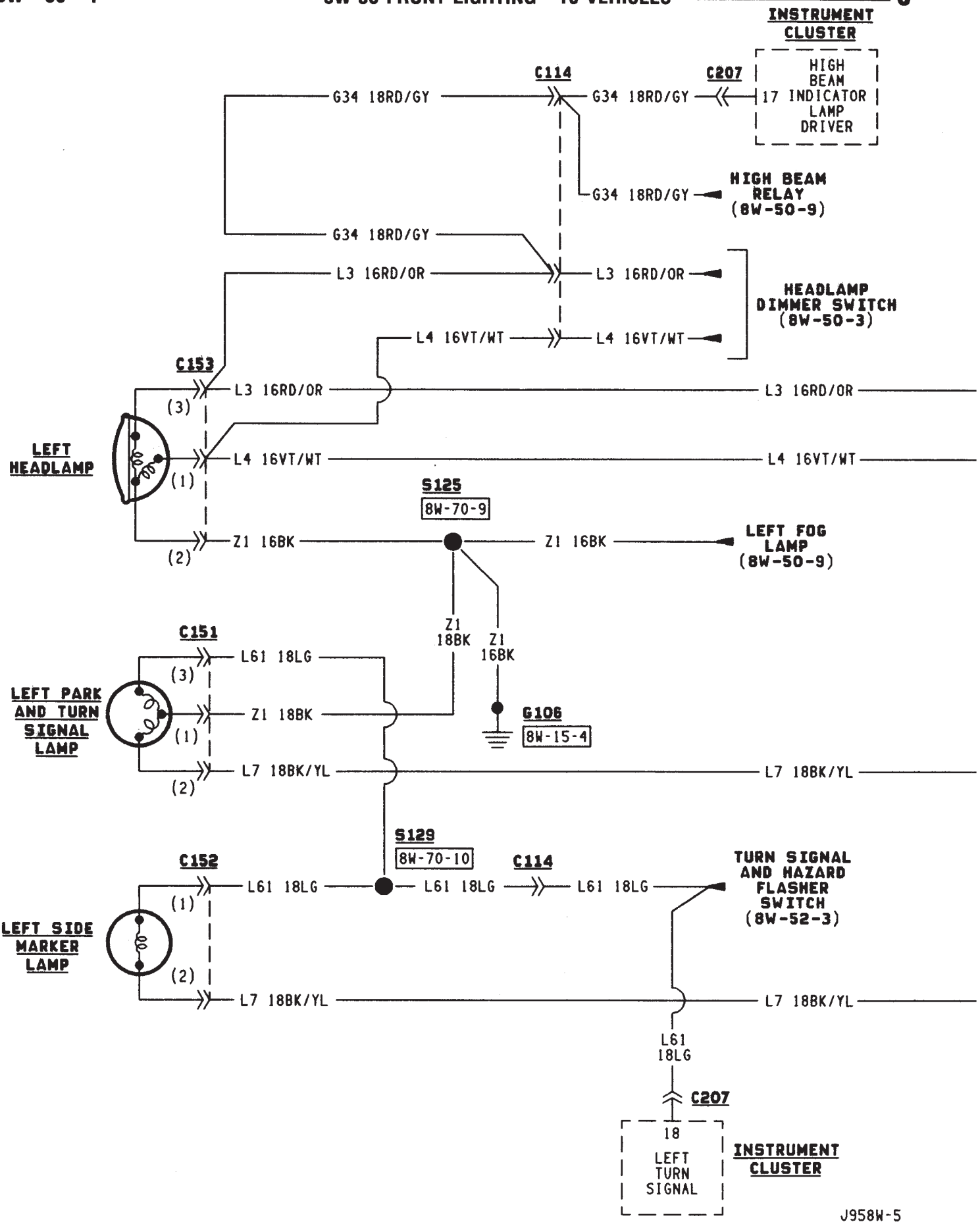
INSTRUMENT CLUSTER
HIGH BEAM INDICATOR DRIVER
17
C207
C114
G34 18RD/GY
G34 18RD/GY
G34 18RD/GY
HIGH BEAM RELAY (8W-50-9)
G34 18RD/GY
L3 16RD/OR
L3 16RD/OR
HEADLAMP DIMMER SWITCH (8W-50-3)
L4 16VT/WT
L4 16VT/WT
C153
L3 16RD/OR
L3 16RD/OR
(3)
LEFT HEADLAMP
L4 16VT/WT
L4 16VT/WT
(1)
S125
8W-70-9
Z1 16BK
Z1 16BK
LEFT FOG LAMP (8W-50-9)
(2)
Z1 18BK
Z1 16BK
C151
L61 18LG
(3)
LEFT PARK AND TURN SIGNAL LAMP
Z1 18BK
(1)
G106
8W-15-4
L7 18BK/YL
L7 18BK/YL
(2)
S129
8W-70-10
C152
C114
TURN SIGNAL AND HAZARD FLASHER SWITCH (8W-52-3)
L61 18LG
L61 18LG
L61 18LG
(1)
LEFT SIDE MARKER LAMP
(2)
L7 18BK/YL
L7 18BK/YL
L61 18LG
C207
18
LEFT TURN SIGNAL
INSTRUMENT CLUSTER
J958W-5

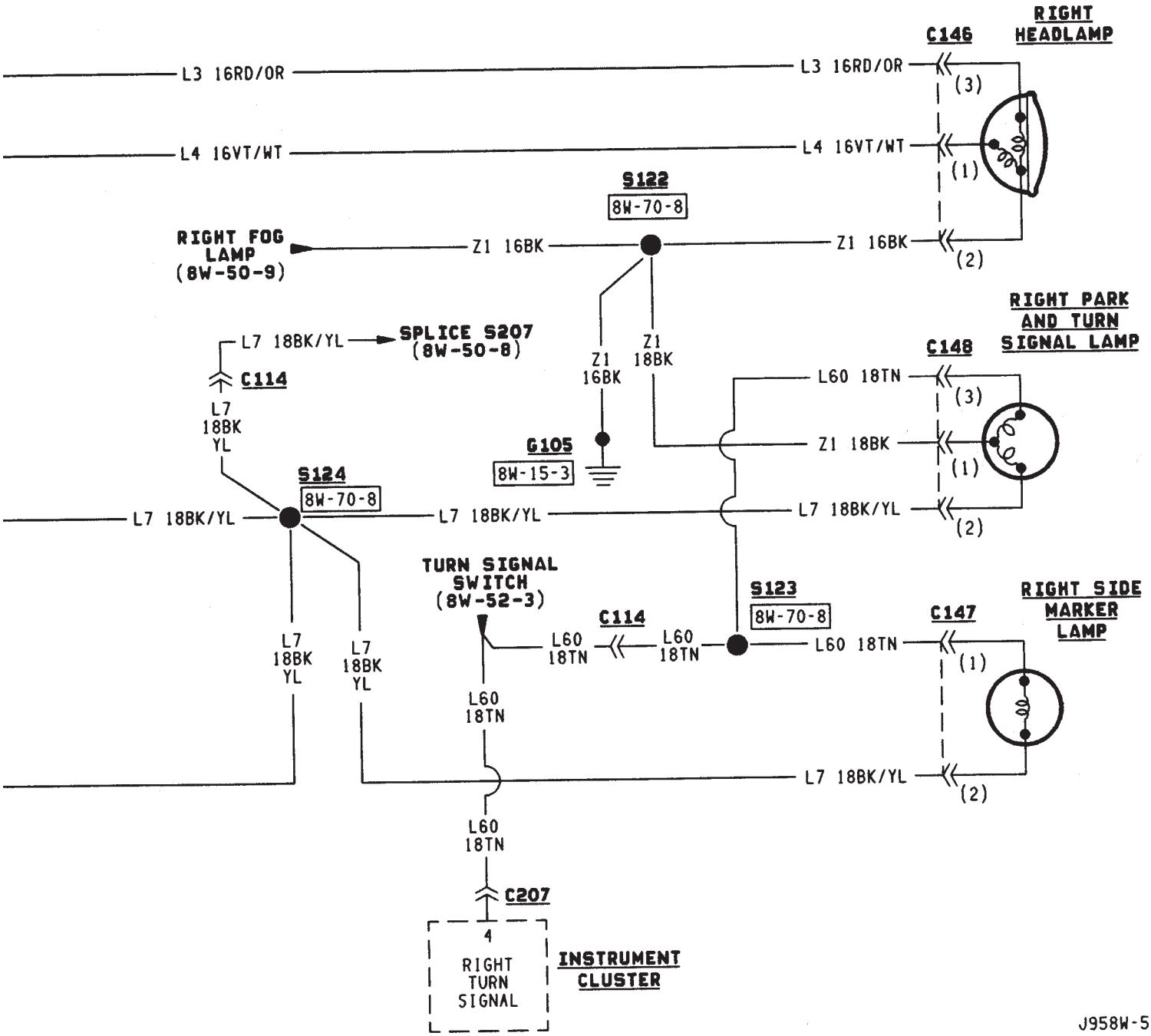
RIGHT HEADLAMP
C146
L3 16RD/OR
L3 16RD/OR
(3)
L4 16VT/WT
L4 16VT/WT
(1)
S122
8W-70-8
RIGHT FOG LAMP (8W-50-9)
Z1 16BK
Z1 16BK
(2)
RIGHT PARK AND TURN SIGNAL LAMP
C148
L7 18BK/YL
SPLICE S207 (8W-50-8)
Z1 16BK
Z1 18BK
L60 18TN
(3)
C114
L7 18BK YL
G105
8W-15-3
Z1 18BK
(1)
S124
8W-70-8
L7 18BK/YL
L7 18BK/YL
L7 18BK/YL
(2)
TURN SIGNAL SWITCH (8W-52-3)
S123
8W-70-8
C114
C147
RIGHT SIDE MARKER LAMP
L7 18BK YL
L7 18BK YL
L60 18TN
L60 18TN
L60 18TN
L60 18TN
(1)
L7 18BK/YL
(2)
L60 18TN
C207
4
RIGHT TURN SIGNAL
INSTRUMENT CLUSTER
J958W-5

WITH DAYTIME RUNNING LAMPS

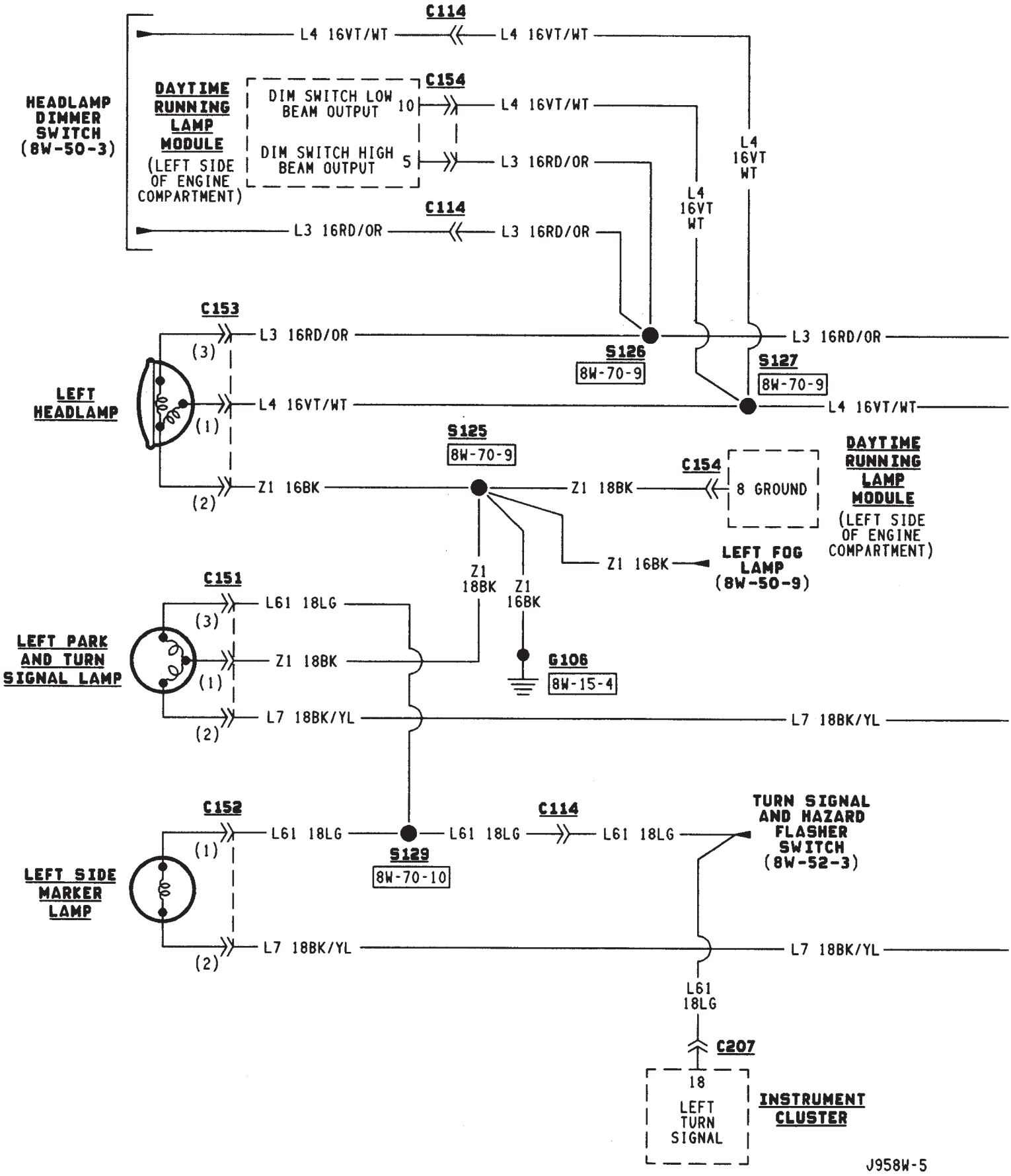

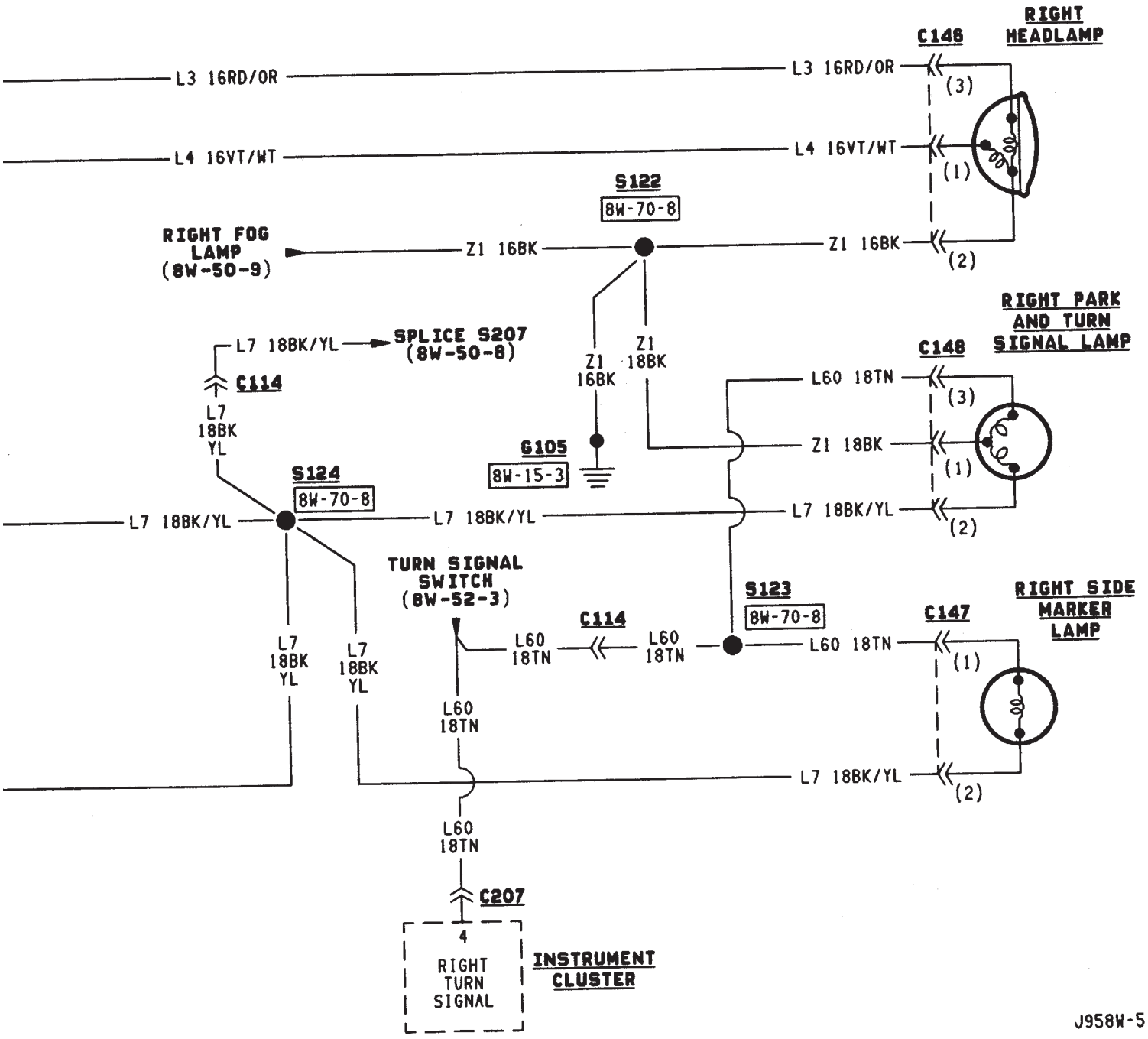
RIGHT HEADLAMP
C146
L3 16RD/OR
L3 16RD/OR
(3)
L4 16VT/WT
L4 16VT/WT
(1)
S122
8W-70-8
RIGHT FOG LAMP (8W-50-9)
Z1 16BK
Z1 16BK
(2)
RIGHT PARK AND TURN SIGNAL LAMP
C148
L7 18BK/YL
SPLICE S207 (8W-50-8)
C114
L7 18BK YL
Z1 16BK
Z1 18BK
L60 18TN
(3)
G105
8W-15-3
Z1 18BK
(1)
S124
8W-70-8
L7 18BK/YL
L7 18BK/YL
L7 18BK/YL
(2)
TURN SIGNAL SWITCH (8W-52-3)
S123
8W-70-8
C114
C147
RIGHT SIDE MARKER LAMP
L7 18BK YL
L7 18BK YL
L60 18TN
L60 18TN
L60 18TN
L60 18TN
(1)
L7 18BK/YL
(2)
L60 18TN
C207
4
RIGHT TURN SIGNAL
INSTRUMENT CLUSTER

J958W-5

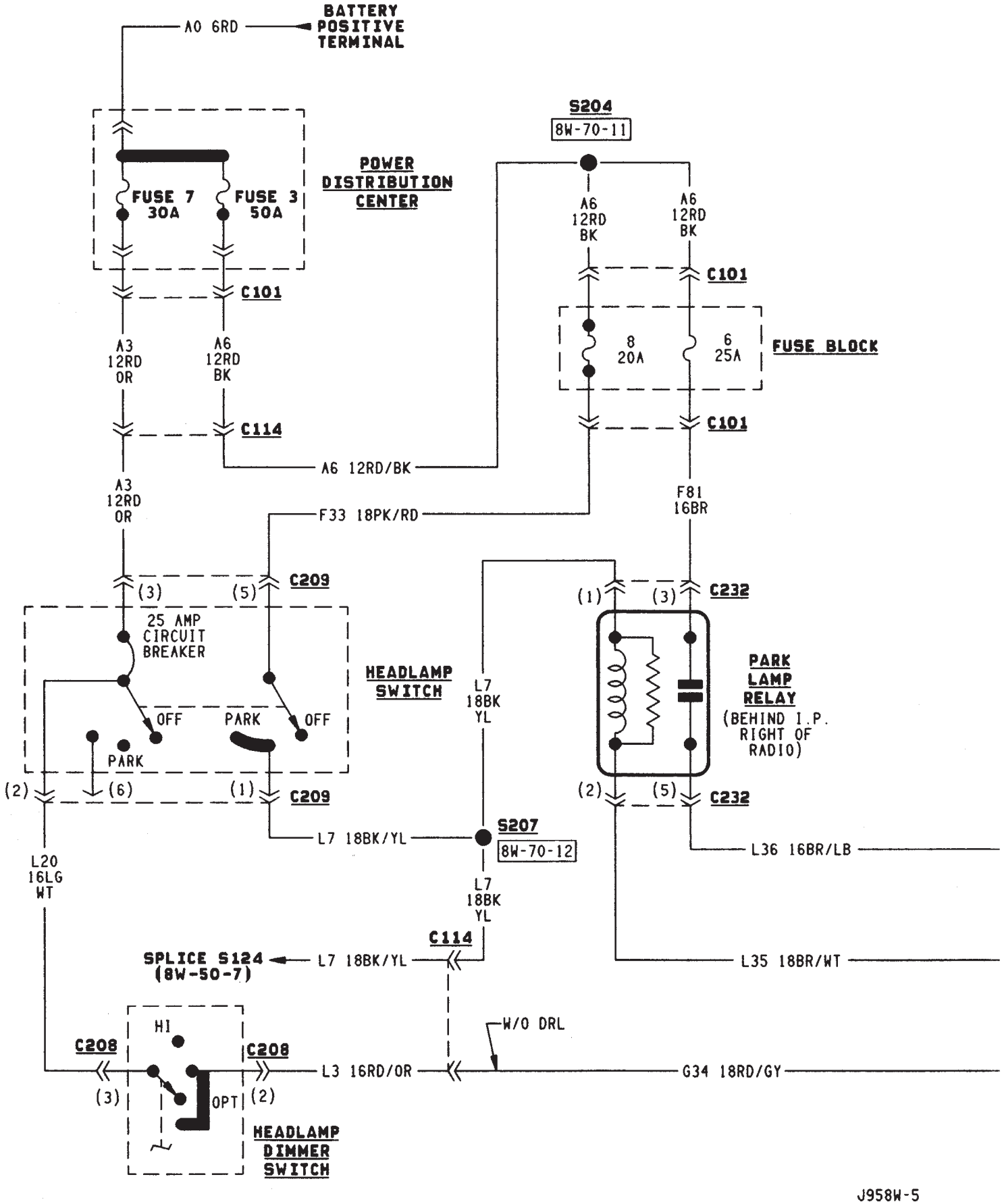
A0 6RD
BATTERY POSITIVE TERMINAL
POWER DISTRIBUTION CENTER
FUSE 7 30A
FUSE 3 50A
C101
A3 12RD OR
A6 12RD BK
C114
A6 12RD/BK
S204
8W-70-11
A6 12RD BK
A6 12RD BK
C101
8 20A
6 25A
FUSE BLOCK
C101
F33 18PK/RD
F81 16BR
A3 12RD OR
C209
(3)
(5)
25 AMP CIRCUIT BREAKER
HEADLAMP SWITCH
OFF
PARK
OFF
PARK
(2)
(6)
(1)
C209
L7 18BK/YL
S207
8W-70-12
L20 16LG WT
L7 18BK YL
C114
SPLICE S124 (8W-50-7)
L7 18BK/YL
(1)
(3)
C232
PARK LAMP RELAY
(BEHIND I.P. RIGHT OF RADIO)
(2)
(5)
C232
L36 16BR/LB
L35 18BR/WT
W/O DRL
C208
C208
HI
OPT
(3)
(2)
L3 16RD/OR
G34 18RD/GY
HEADLAMP DIMMER SWITCH
J958W-5

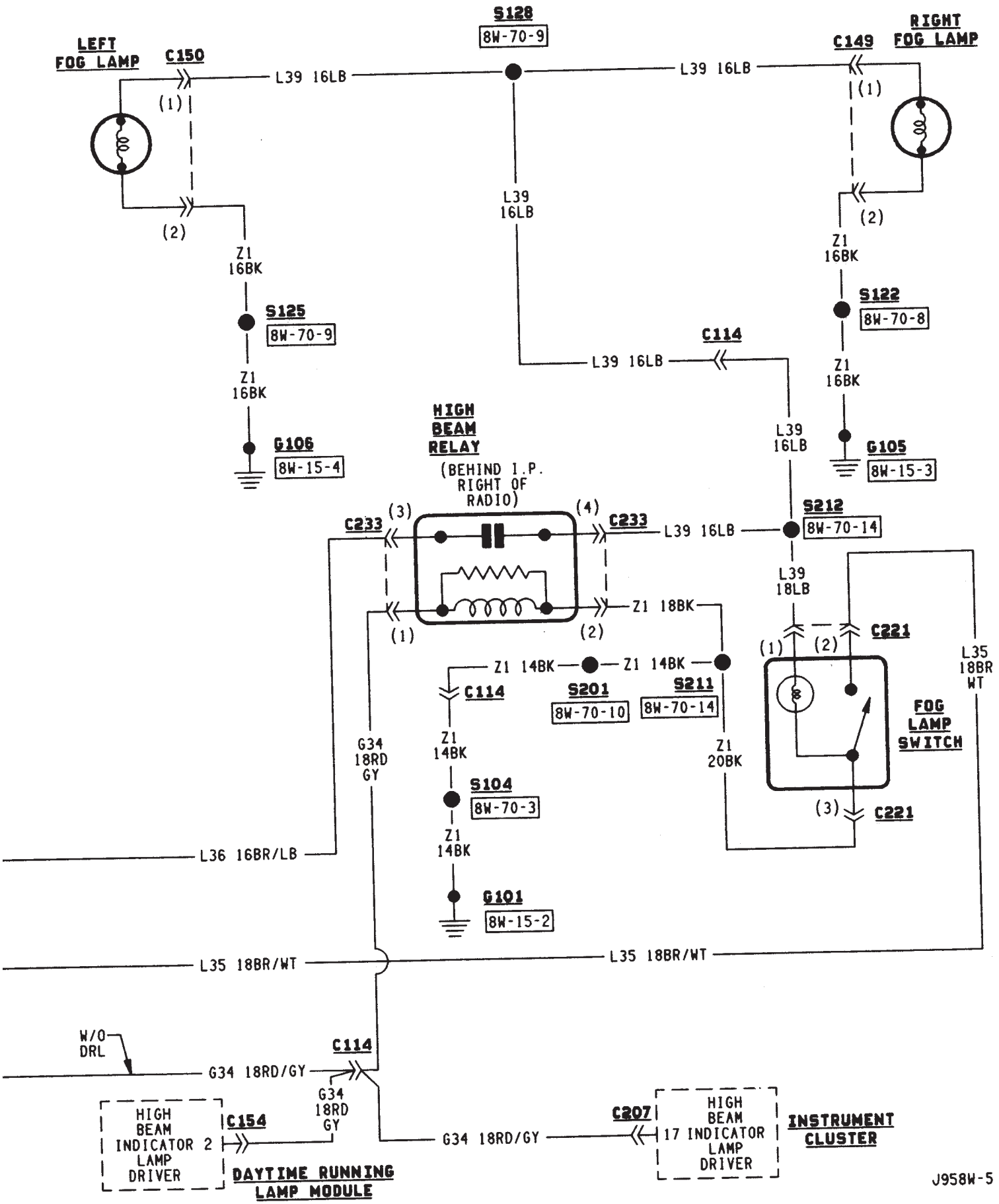
S128
8W-70-9
LEFT FOG LAMP
C150
RIGHT FOG LAMP
C149
L39 16LB
L39 16LB
(1)
(2)
Z1 16BK
S125
8W-70-9
Z1 16BK
G106
8W-15-4
L39 16LB
C114
L39 16LB
Z1 16BK
S122
8W-70-8
Z1 16BK
G105
8W-15-3
HIGH BEAM RELAY
(BEHIND I.P. RIGHT OF RADIO)
C233
C233
(3)
(4)
L39 16LB
S212
8W-70-14
L39 18LB
Z1 18BK
(1)
(2)
C221
(1)
(2)
Z1 14BK
Z1 14BK
C114
S201
8W-70-10
S211
8W-70-14
L35 18BR WT
FOG LAMP SWITCH
G34 18RD GY
Z1 14BK
Z1 20BK
S104
8W-70-3
Z1 14BK
(3)
C221
L36 16BR/LB
G101
8W-15-2
L35 18BR/WT
L35 18BR/WT
W/O DRL
C114
G34 18RD/GY
G34 18RD GY
HIGH BEAM INDICATOR 2 LAMP DRIVER
C154
DAYTIME RUNNING LAMP MODULE
G34 18RD/GY
C207
HIGH BEAM 17 INDICATOR LAMP DRIVER
INSTRUMENT CLUSTER
J958W-5

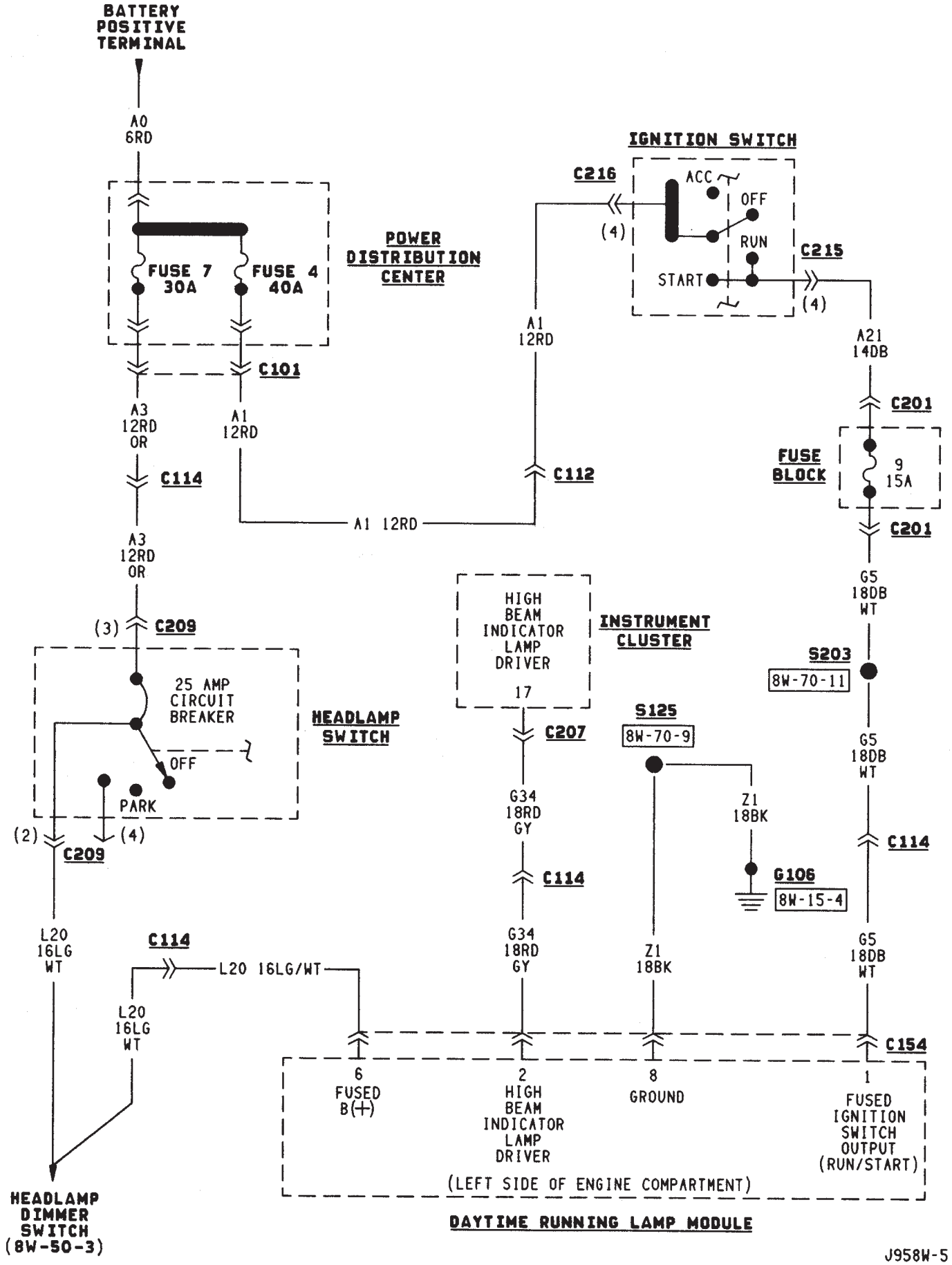
BATTERY POSITIVE TERMINAL
A0 6RD
POWER DISTRIBUTION CENTER
FUSE 7 30A
FUSE 4 40A
C101
A3 12RD OR
A1 12RD
C114
A3 12RD OR
(3) C209
25 AMP CIRCUIT BREAKER
OFF
PARK
HEADLAMP SWITCH
(2) C209
(4)
L20 16LG WT
HEADLAMP DIMMER SWITCH (8W-50-3)
C114
L20 16LG/WT
L20 16LG WT
C216
(4)
IGNITION SWITCH
ACC
OFF
RUN
START
C215
(4)
A1 12RD
C112
A1 12RD
A21 14DB
C201
FUSE BLOCK
9 15A
C201
G5 18DB WT
S203
8W-70-11
G5 18DB WT
C114
G5 18DB WT
HIGH BEAM INDICATOR LAMP DRIVER
17
INSTRUMENT CLUSTER
C207
G34 18RD GY
C114
G34 18RD GY
S125
8W-70-9
Z1 18BK
Z1 18BK
G106
8W-15-4
C154
6 FUSED B(+)
2 HIGH BEAM INDICATOR LAMP DRIVER
8 GROUND
1 FUSED IGNITION SWITCH OUTPUT (RUN/START)
(LEFT SIDE OF ENGINE COMPARTMENT)
DAYTIME RUNNING LAMP MODULE
J958W-5

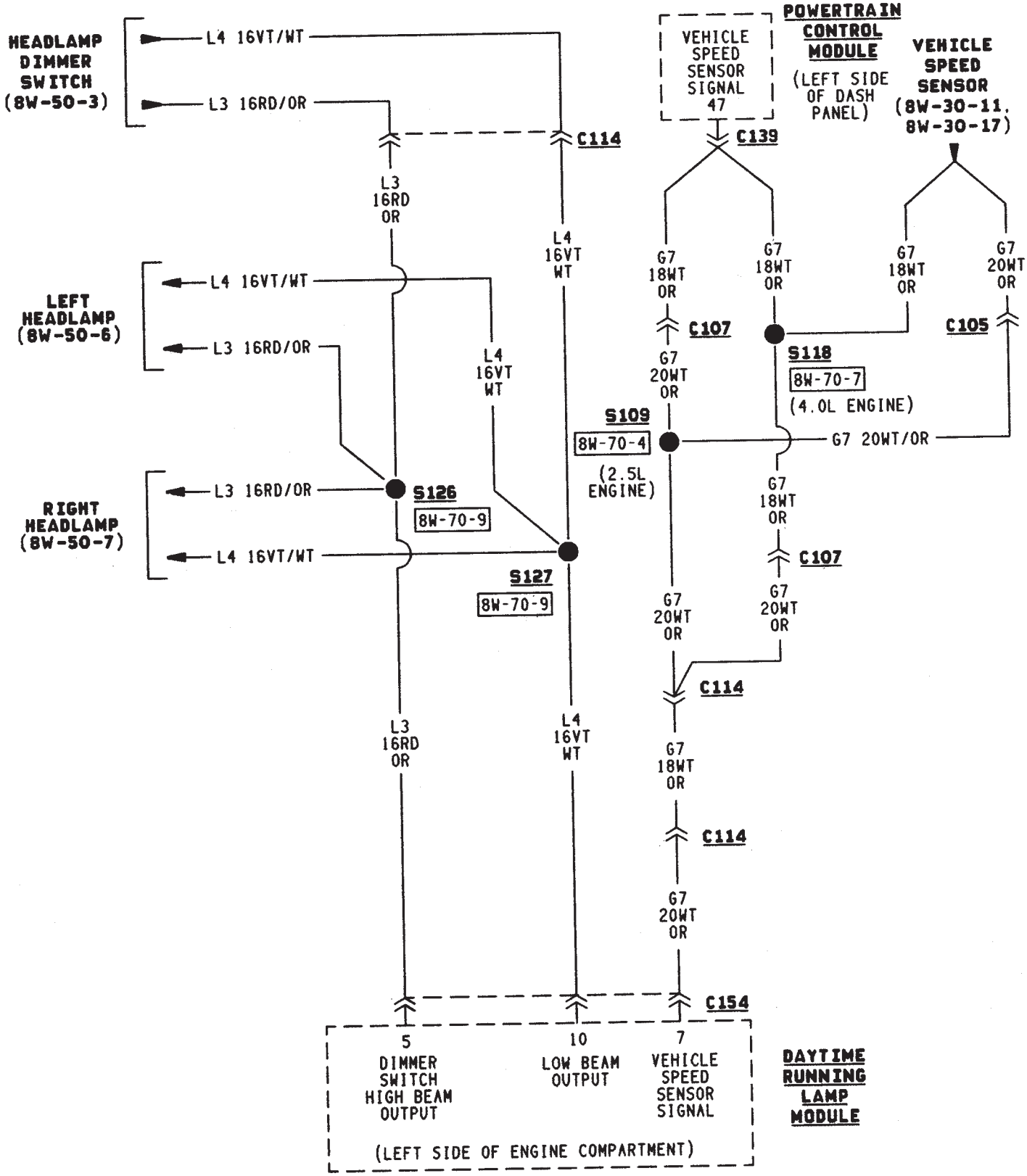
HEADLAMP DIMMER SWITCH (8W-50-3)
L4 16VT/WT
L3 16RD/OR
C114
L3 16RD OR
L4 16VT WT
LEFT HEADLAMP (8W-50-6)
L4 16VT/WT
L3 16RD/OR
L4 16VT WT
RIGHT HEADLAMP (8W-50-7)
L3 16RD/OR
S126
8W-70-9
L4 16VT/WT
S127
8W-70-9
L3 16RD OR
L4 16VT WT
VEHICLE SPEED SENSOR SIGNAL 47
C139
POWERTRAIN CONTROL MODULE
(LEFT SIDE OF DASH PANEL)
VEHICLE SPEED SENSOR (8W-30-11, 8W-30-17)
G7 18WT OR
G7 18WT OR
G7 18WT OR
G7 20WT OR
C107
C105
G7 20WT OR
S118
8W-70-7
(4.0L ENGINE)
S109
8W-70-4
(2.5L ENGINE)
G7 20WT/OR
G7 18WT OR
C107
G7 20WT OR
G7 20WT OR
C114
G7 18WT OR
C114
G7 20WT OR
C154
5
DIMMER SWITCH HIGH BEAM OUTPUT
10
LOW BEAM OUTPUT
7
VEHICLE SPEED SENSOR SIGNAL
(LEFT SIDE OF ENGINE COMPARTMENT)
DAYTIME RUNNING LAMP MODULE

J958W-5

REAR LIGHTING

TAIL LAMPS AND LICENSE PLATE LAMPS

Circuit A6 in the Power Distribution Center (PDC) connects to a bus bar in the fuse block. The fuse block bus bar powers circuit F33. Circuit F33 connects to the headlamp switch. Fuse 3 in the PDC protects circuit A3. Fuse 8 in the fuse block protects circuit F33.

The headlamp switch has three positions: ON, PARK (parking lamps) and OFF, plus a dimmer switch. When the headlamp switch is in the PARK or ON position, the switch connects circuit F33 to circuit L7. From the headlamp switch, circuit L7 branches to power the front parking lamps and rear tail and license plate lamps. The lamps are case grounded.

HELPFUL INFORMATION

- If the vehicle is equipped with factory installed fog lamps, circuit L7 splices to feed the park lamp relay.
- Jumper harnesses connect the tail, stop, turn signal lamp to the body harness.
- Check fuse 3 in the PDC.
- Check fuse 8 in the fuse block.
- Circuit L7 also feeds the radio, if equipped.

STOP LAMPS AND CHMSL LAMPS

Circuit A6 from fuse 3 in the Power Distribution Center (PDC) supplies voltage to the fuse block bus bar. The bus bar powers circuit F32 through fuse 3 in the fuse block. Circuit F32 connects to the stop lamp switch.

When the operator depresses the brake pedal, the stop lamp switch closes, and connects circuit F32 to circuit L50. Circuit L50 connects to the CHMSL lamps and turn signal/hazard flasher. Circuit Z1 provides ground for the CHMSL lamps. The turn signal/hazard flasher supplies current to the L62 and L63 circuits. Circuit L62 powers the right stop lamp. Circuit L63 powers the left stop lamp. The stop lamps are case grounded.

HELPFUL INFORMATION

- Circuits L50 and Z1 pass through contacts in the rear door before reaching the CHMSL lamps.
- Check fuse 3 in the PDC.
- Check fuse 3 in the fuse block.
- Check for continuity across the stop lamp switch when it is closed.
- If the vehicle is equipped with anti-lock brakes, circuit L50 connects to the ABS module.

BACK-UP LAMPS

In the START or RUN position, the ignition switch connects circuit A1 from fuse 4 in the Power Distribution Center (PDC) to circuit A21. Circuit A21 feeds a bus bar in the fuse block that powers circuit G5 through fuse 9.

Circuit G5 splices to supply power to the back-up lamp switch. On automatic transmission vehicles, the back-up lamp switch is part of an assembly that includes the PARK/NEUTRAL position switch.

When the operator puts the transmission in Reverse, the back-up lamp switch connects circuit G5 to circuit L1. Circuit L1 feeds the case grounded back-up lamps.

HELPFUL INFORMATION

- Check fuse 4 in the PDC.
- Check fuse 9 in the fuse block.
- Check for continuity across the back-up lamp switch when it is closed.

DIAGRAM INDEX

Component	Page
ABS Control Module	8W-51-3
Back-Up Lamps	8W-51-4
Back-Up Lamp Switch	8W-51-2
Center High Mounted Stop Lamps (CHMSL)	8W-51-3
Fuse 3 (Fuse Block)	8W-51-2
Fuse 3 (PDC)	8W-51-2
Fuse 4 (PDC)	8W-51-2
Fuse 9 (Fuse Block)	8W-51-2
Fuse 8 (Fuse Block)	8W-51-2
Headlamp Switch	8W-51-2
Ignition Switch	8W-51-2
Powertrain Control Module	8W-51-3
Stop Lamp Switch	8W-51-3
Tail, Stop, and Turn Signal Lamps	8W-51-4

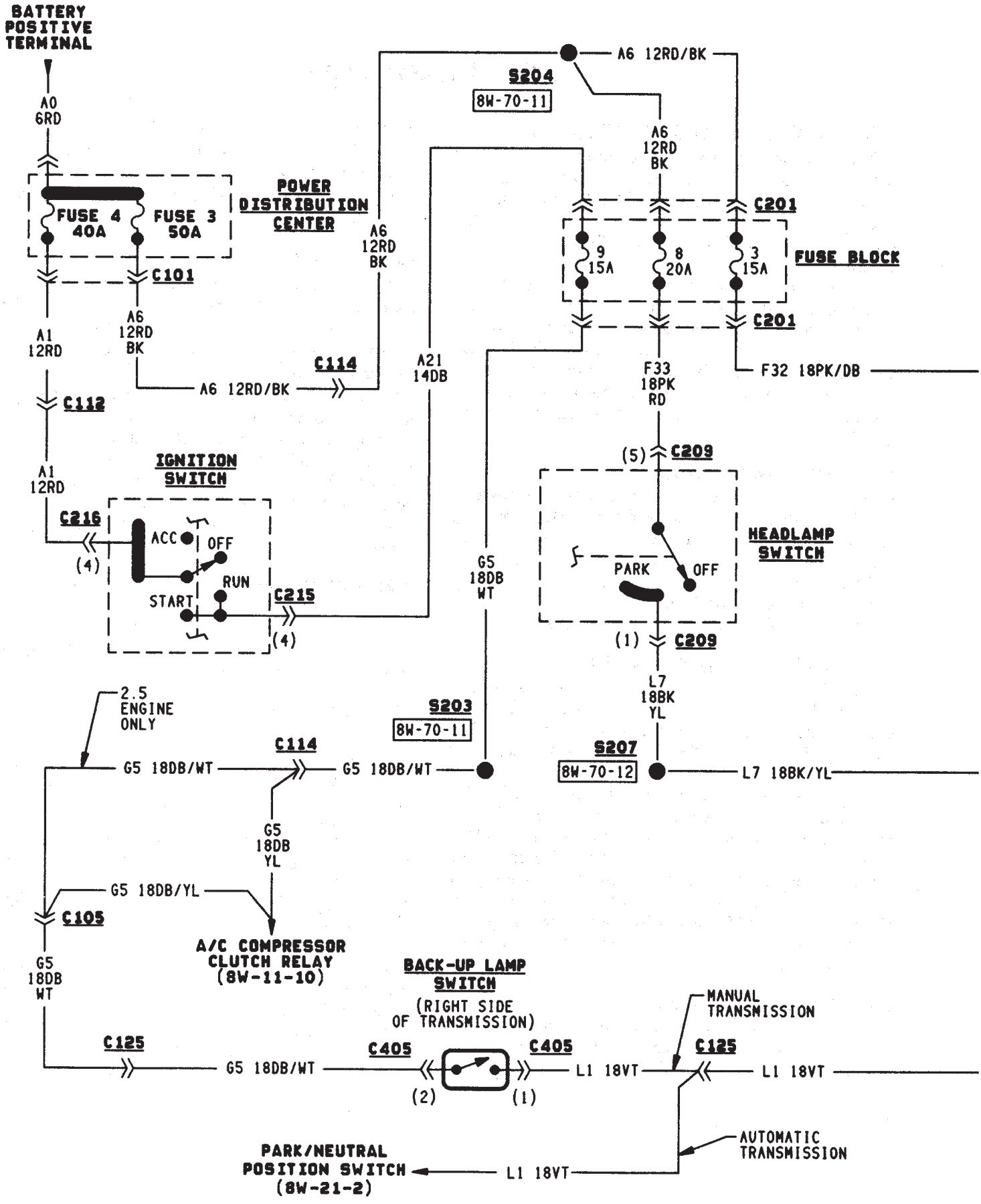
BATTERY POSITIVE TERMINAL
A0 6RD
FUSE 4 40A
FUSE 3 50A
POWER DISTRIBUTION CENTER
C101
A1 12RD
A6 12RD BK
C112
A6 12RD BK
C114
A6 12RD/BK
S204
8W-70-11
A6 12RD BK
C201
9 15A
8 20A
3 15A
FUSE BLOCK
C201
A21 14DB
F33 18PK RD
F32 18PK/DB
(5) C209
IGNITION SWITCH
C216
(4)
ACC
OFF
RUN
START
C215
(4)
G5 18DB WT
HEADLAMP SWITCH
PARK
OFF
(1) C209
L7 18BK YL
S207
8W-70-12
L7 18BK/YL
2.5 ENGINE ONLY
S203
8W-70-11
C114
G5 18DB/WT
G5 18DB/WT
G5 18DB YL
G5 18DB/YL
C105
G5 18DB WT
A/C COMPRESSOR CLUTCH RELAY (8W-11-10)
BACK-UP LAMP SWITCH
(RIGHT SIDE OF TRANSMISSION)
MANUAL TRANSMISSION
C125
C405
C405
C125
G5 18DB/WT
L1 18VT
L1 18VT
(2)
(1)
AUTOMATIC TRANSMISSION
PARK/NEUTRAL POSITION SWITCH (8W-21-2)
L1 18VT
J958W-5

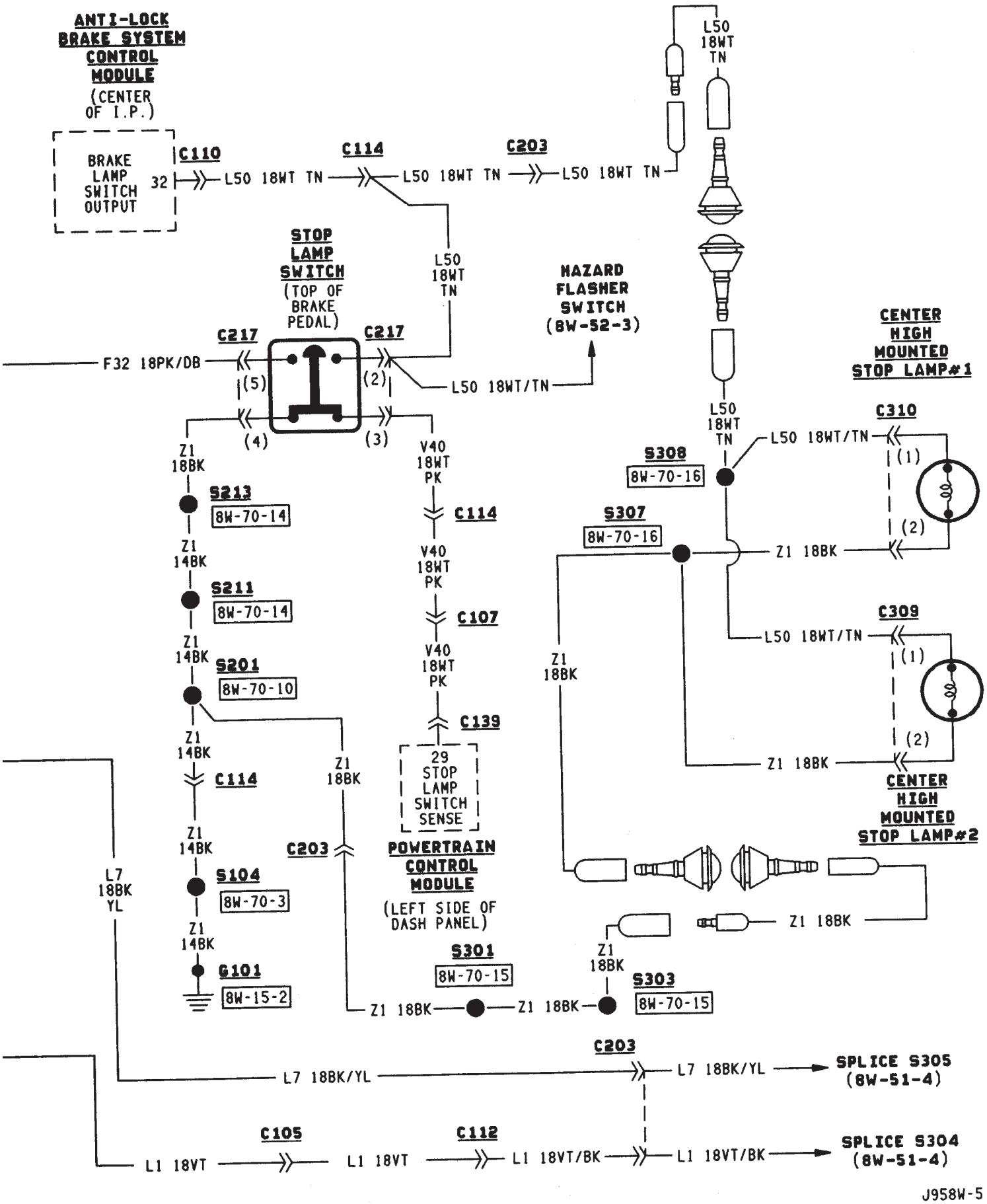
ANTI-LOCK BRAKE SYSTEM CONTROL MODULE
(CENTER OF I.P.)
BRAKE LAMP SWITCH OUTPUT
32
C110
L50 18WT TN
C114
L50 18WT TN
C203
L50 18WT TN
L50 18WT TN
STOP LAMP SWITCH
(TOP OF BRAKE PEDAL)
C217
C217
F32 18PK/DB
(5)
(2)
(4)
(3)
L50 18WT/TN
HAZARD FLASHER SWITCH
(8W-52-3)
CENTER HIGH MOUNTED STOP LAMP#1
C310
L50 18WT TN
L50 18WT/TN
(1)
(2)
S308
8W-70-16
S307
8W-70-16
Z1 18BK
Z1 18BK
Z1 18BK
S213
8W-70-14
Z1 14BK
S211
8W-70-14
Z1 14BK
S201
8W-70-10
Z1 14BK
C114
Z1 14BK
S104
8W-70-3
Z1 14BK
G101
8W-15-2
V40 18WT PK
C114
V40 18WT PK
C107
V40 18WT PK
C139
29 STOP LAMP SWITCH SENSE
POWERTRAIN CONTROL MODULE
(LEFT SIDE OF DASH PANEL)
C309
L50 18WT/TN
(1)
(2)
Z1 18BK
CENTER HIGH MOUNTED STOP LAMP#2
Z1 18BK
Z1 18BK
Z1 18BK
S301
8W-70-15
S303
8W-70-15
Z1 18BK
Z1 18BK
L7 18BK YL
C203
L7 18BK/YL
L7 18BK/YL
SPLICE S305
(8W-51-4)
C105
C112
L1 18VT
L1 18VT
L1 18VT/BK
L1 18VT/BK
SPLICE S304
(8W-51-4)

J958W-5

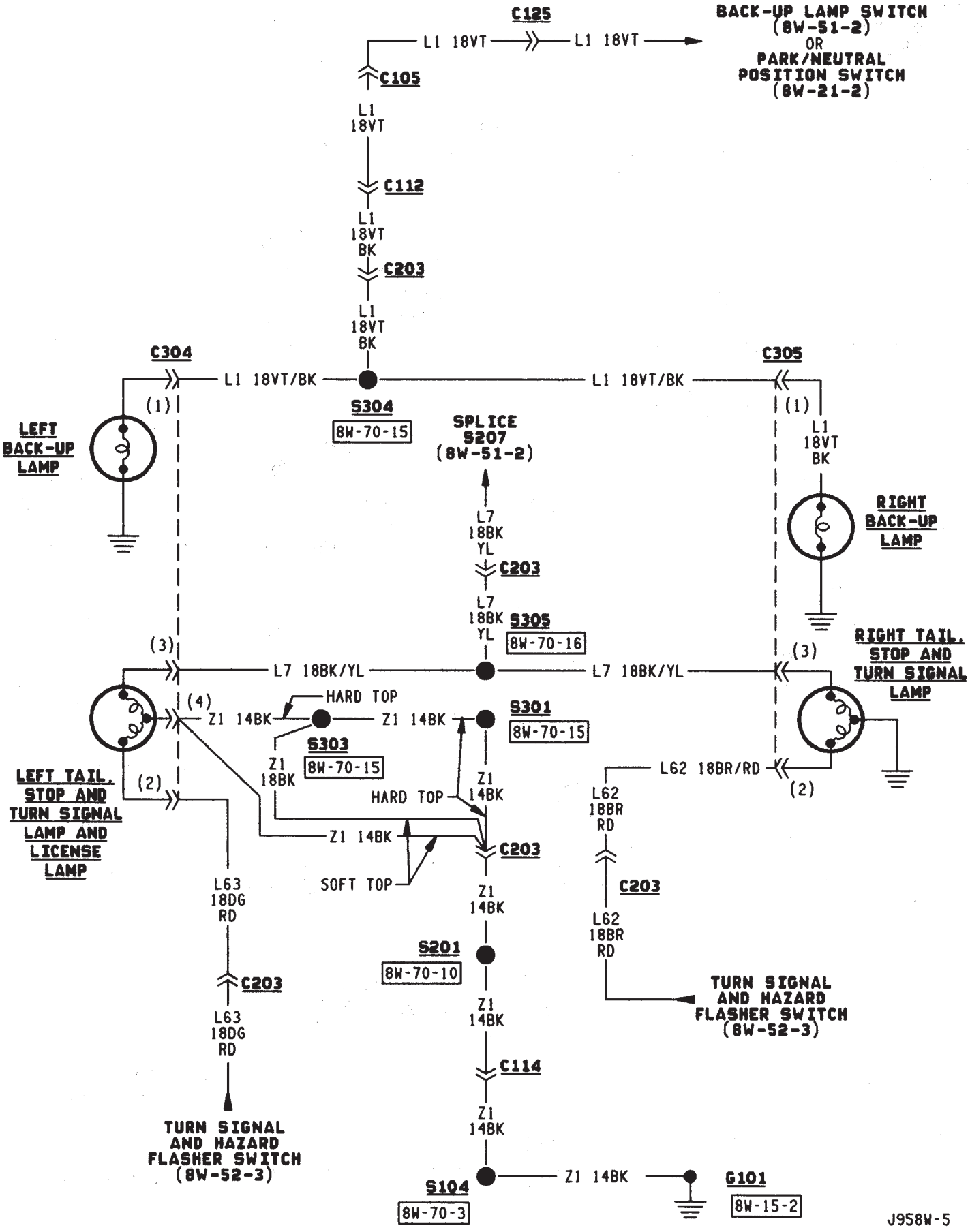
C125
L1 18VT
L1 18VT
BACK-UP LAMP SWITCH
(8W-51-2)
OR
PARK/NEUTRAL
POSITION SWITCH
(8W-21-2)
C105
L1
18VT
C112
L1
18VT
BK
C203
L1
18VT
BK
C304
L1 18VT/BK
L1 18VT/BK
C305
S304
8W-70-15
SPLICE
S207
(8W-51-2)
(1)
LEFT
BACK-UP
LAMP
L7
18BK
YL
C203
L7
18BK
YL
S305
8W-70-16
(1)
L1
18VT
BK
RIGHT
BACK-UP
LAMP
(3)
L7 18BK/YL
L7 18BK/YL
(3)
RIGHT TAIL,
STOP AND
TURN SIGNAL
LAMP
(4)
HARD TOP
Z1 14BK
Z1 14BK
S301
8W-70-15
S303
8W-70-15
Z1
18BK
LEFT TAIL,
STOP AND
TURN SIGNAL
LAMP AND
LICENSE
LAMP
(2)
L62 18BR/RD
(2)
HARD TOP
Z1
14BK
L62
18BR
RD
Z1 14BK
C203
SOFT TOP
C203
Z1
14BK
L63
18DG
RD
C203
L62
18BR
RD
S201
8W-70-10
TURN SIGNAL
AND HAZARD
FLASHER SWITCH
(8W-52-3)
Z1
14BK
L63
18DG
RD
C114
Z1
14BK
TURN SIGNAL
AND HAZARD
FLASHER SWITCH
(8W-52-3)
S104
8W-70-3
Z1 14BK
G101
8W-15-2
J958W-5

TURN SIGNALS

TURN SIGNALS

In the ACCESSORY or RUN position, the ignition switch connects circuit A1 from fuse 4 in the Power Distribution Center (PDC) to circuit A31. Circuit A31 feeds circuit L5 through fuse 4 in the fuse block.

Circuit L5 powers the turn signal flasher. Circuit L6 from the flasher connects to the turn signal/hazard flasher switch which supplies current to the turn signals. The switch connects to the turn signal and side marker lamps on circuits L60, L61, L62 and L63.

RIGHT TURN SIGNAL

When the operator selects the right turn signal, the turn signal/hazard flasher switch connects power from circuit L6 to circuits L60 and L62. Circuit L62 feeds the right rear turn signal/hazard flasher/stop lamp.

Circuit L60 feeds the right front turn signal/hazard flasher lamp and side marker lamp. Circuit L60 also splices to power the turn signal indicator lamp on the instrument cluster.

LEFT TURN SIGNAL

When the operator selects the left turn signal, the turn signal/hazard flasher switch connects power from circuit L6 to circuits L61 and L63. Circuit L63 feeds the left rear turn signal/hazard flasher/stop lamp.

Circuit L61 feeds the left front turn signal/hazard flasher lamp and side marker lamp. Circuit L61 also splices to power the turn signal indicator lamp on the instrument cluster.

GROUND CIRCUIT

Circuit Z1 provides a ground for the left front park and turn signal lamp, side marker lamp and head lamp. The grounding point for circuit Z1 is the radiator left support.

Circuit Z1 provides a ground for the right front park and turn signal lamp, side marker lamp and head lamp. The grounding point for circuit Z1 is the radiator right support.

HELPFUL INFORMATION

- Check fuse 4 in the PDC.
- Check fuse 4 in the fuse block.

HAZARD FLASHERS

Circuit L9 from fuse 5 in the Power Distribution Center (PDC) supplies power to the hazard flasher. Circuit L19 from the flasher connects to the turn signal/hazard flasher switch.

When the operator presses the hazard flasher button, the turn signal/hazard flasher switch connects circuit L19 to circuits L60, L61, L62, and L63. Circuit L62 powers the right rear turn signal/stop/hazard lamp. Circuit L63 powers the left rear turn signal/stop/hazard lamp. Circuit L60 powers the right front indicator lamp. Circuit L61 powers the left front lamp.

Circuit L60 also splices to feed the instrument cluster right indicator lamp. Circuit L61 splices to feed the instrument cluster left indicator lamp.

GROUND CIRCUIT

The rear turn signal/stop/hazard lamps are case grounded.

Circuit Z1 provides a ground for the left front park and turn signal lamp, side marker lamp and head lamp. The grounding point for circuit Z1 is the radiator left support.

Circuit Z1 provides a ground for the right left park and turn signal lamp, side marker lamp and head lamp. The grounding point for circuit Z1 is the radiator right support.

HELPFUL INFORMATION

Check fuse 5 in the PDC.

DIAGRAM INDEX

Component	Page
ABS Control Module	8W-52-2
Fuse 3 (Fuse Block)	8W-52-2
Fuse 3 (PDC)	8W-52-2
Fuse 4 (Fuse Block)	8W-52-2
Fuse 4 (PDC)	8W-52-2
Fuse 5 (PDC)	8W-52-2
Hazard Flasher	8W-52-2
Ignition Switch	8W-52-2
Instrument Cluster Turn Signal Lamps	8W-52-3
Stop Lamp Switch	8W-52-2
Turn Signal Flasher	8W-52-2
Turn Signal/Hazard Flasher Switch	8W-52-3

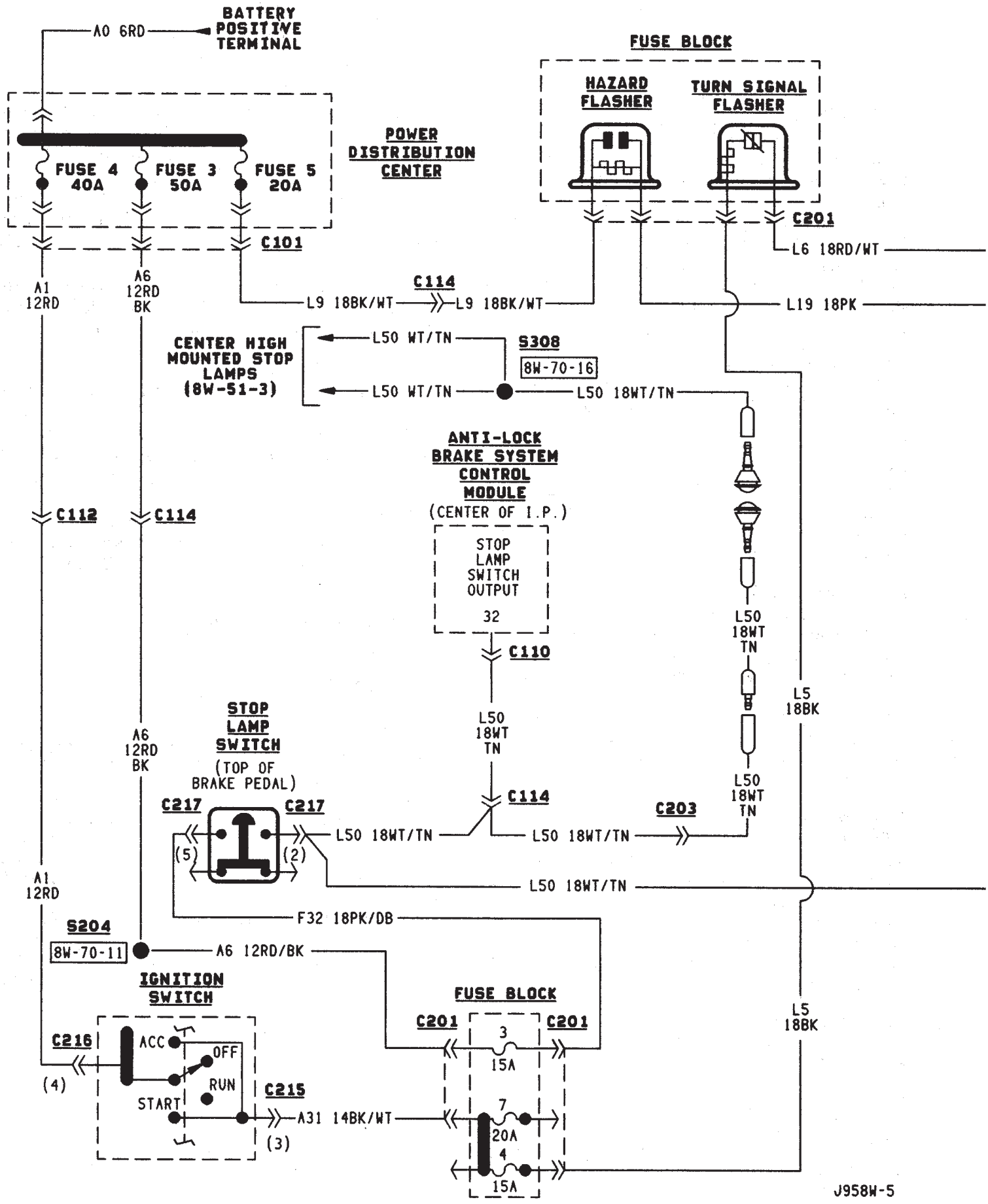
BATTERY POSITIVE TERMINAL
A0 6RD
FUSE BLOCK
HAZARD FLASHER
TURN SIGNAL FLASHER
POWER DISTRIBUTION CENTER
FUSE 4 40A
FUSE 3 50A
FUSE 5 20A
C201
C101
L6 18RD/WT
A1 12RD
A6 12RD BK
C114
L9 18BK/WT
L9 18BK/WT
L19 18PK
CENTER HIGH MOUNTED STOP LAMPS (8W-51-3)
L50 WT/TN
L50 WT/TN
S308
8W-70-16
L50 18WT/TN
ANTI-LOCK BRAKE SYSTEM CONTROL MODULE
(CENTER OF I.P.)
STOP LAMP SWITCH OUTPUT
32
C112
C114
C110
L50 18WT TN
L5 18BK
STOP LAMP SWITCH
(TOP OF BRAKE PEDAL)
C217
C217
(5)
(2)
L50 18WT/TN
L50 18WT/TN
C114
C203
L50 18WT TN
L50 18WT/TN
F32 18PK/DB
S204
8W-70-11
A6 12RD/BK
IGNITION SWITCH
C216
ACC
OFF
RUN
START
(4)
C215
(3)
A31 14BK/WT
FUSE BLOCK
C201
C201
3
15A
7
20A
4
15A
L5 18BK
J958W-5

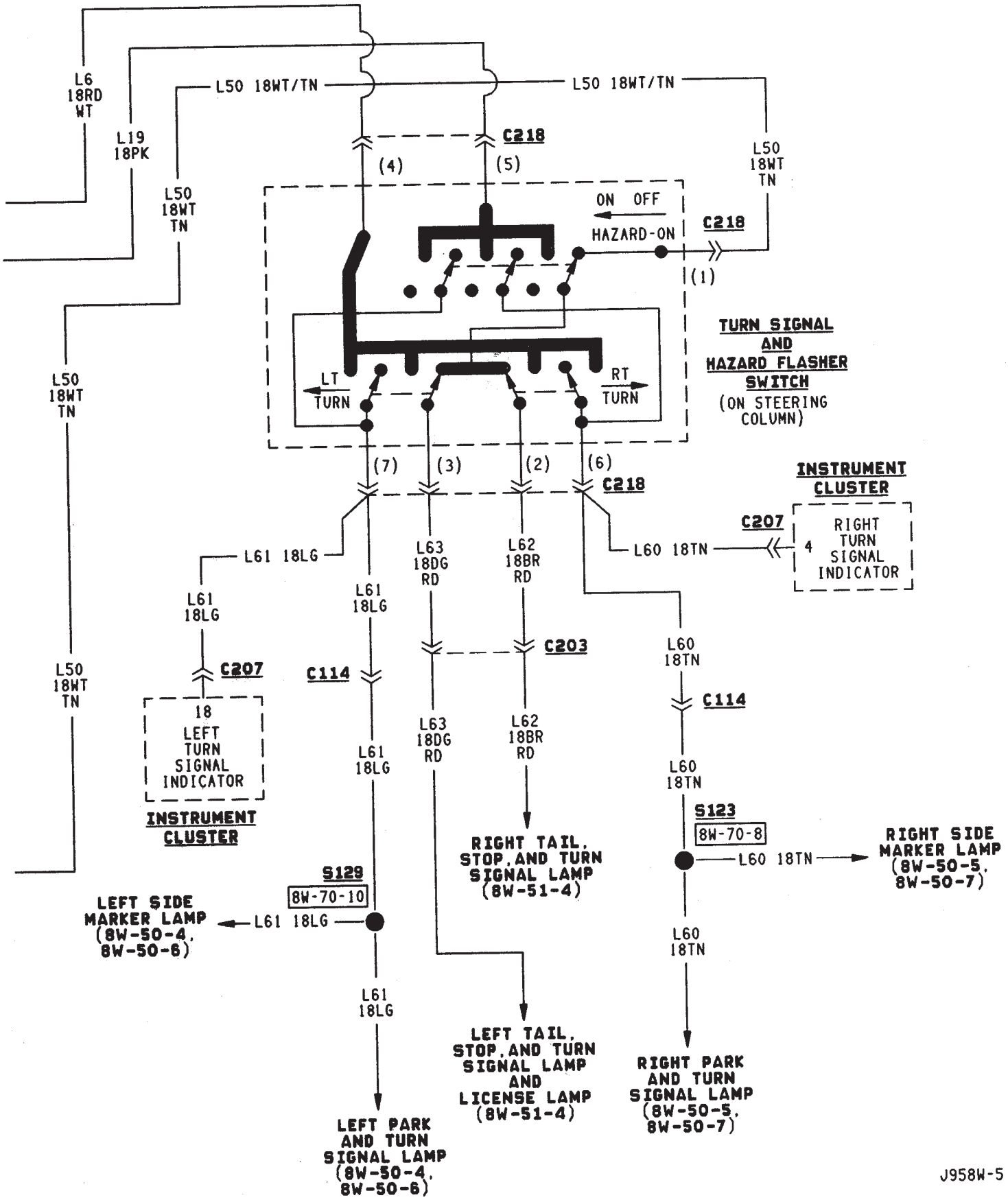
L6 18RD WT
L19 18PK
L50 18WT/TN
L50 18WT/TN
C218
(4)
(5)
L50 18WT TN
ON OFF
HAZARD-ON
C218
(1)
L50 18WT TN
L50 18WT TN
LT TURN
RT TURN
TURN SIGNAL AND HAZARD FLASHER SWITCH
(ON STEERING COLUMN)
(7)
(3)
(2)
(6)
C218
INSTRUMENT CLUSTER
C207
4 RIGHT TURN SIGNAL INDICATOR
L61 18LG
L63 18DG RD
L62 18BR RD
L60 18TN
L61 18LG
C207
18 LEFT TURN SIGNAL INDICATOR
INSTRUMENT CLUSTER
C114
L61 18LG
C203
L60 18TN
C114
L63 18DG RD
L62 18BR RD
L60 18TN
S123
8W-70-8
L60 18TN
RIGHT SIDE MARKER LAMP (8W-50-5, 8W-50-7)
S129
8W-70-10
L61 18LG
LEFT SIDE MARKER LAMP (8W-50-4, 8W-50-6)
RIGHT TAIL, STOP, AND TURN SIGNAL LAMP (8W-51-4)
L61 18LG
L60 18TN
LEFT TAIL, STOP, AND TURN SIGNAL LAMP AND LICENSE LAMP (8W-51-4)
RIGHT PARK AND TURN SIGNAL LAMP (8W-50-5, 8W-50-7)
LEFT PARK AND TURN SIGNAL LAMP (8W-50-4, 8W-50-6)
J958W-5

WIPERS

INDEX

	page
Diagram Index	2
Rear Wiper System	1
Wipers—Intermittent	1
Wipers—Standard	1

WIPERS—STANDARD

A circuit breaker in the fuse block powers the standard wiper system. The standard wiper system operates at either LOW or HIGH speeds.

In the ACCESSORY or RUN position, the ignition switch connects circuit A1 from fuse 4 in the Power Distribution Center (PDC) with circuit A31. Circuit A31 supplies voltage to circuit V6 through the circuit breaker in cavity 11 of the fuse block.

Circuit V6 is double crimped at the circuit breaker and supplies power to the wiper switch and the park switch in the wiper motor. Circuit Z1 provides ground for the wiper motor and switch.

When the operator moves the wiper switch to the LOW position, battery voltage passes through the switch to circuit V3. Circuit V3 feeds the wiper motor low speed brushes. If the operator selects wiper HIGH speed operation, the wiper switch passes current to circuit V4. Circuit V4 feeds the wiper motor high speed brushes.

As the windshield wiper motor turns, the park switch, internal to the motor, moves from its DOWN position to the UP position. When the wiper switch is turned OFF, the V5 circuit prevents the wipers from stopping in any position but park.

The windshield washer uses a pump motor located inside the windshield washer fluid reservoir. When the washer switch is pressed, power is supplied through the wiper switch to the pump motor on circuit V10. Circuit Z1 provide ground for the pump motor.

WIPERS—INTERMITTENT

A circuit breaker in the fuse block powers the intermittent wiper system. The wiper system operates at either LOW, HIGH, or DELAY speeds.

In the ACCESSORY or RUN position, the ignition switch connects circuit A1 from fuse 4 in the Power Distribution Center (PDC) with circuit A31. Circuit A31 supplies voltage to circuit V6 through the circuit breaker in cavity 11 of the fuse block.

Circuit V6 is double crimped at the circuit breaker and supplies power to the wiper switch and the park switch in the wiper motor. Circuit Z1 provides ground for the wiper motor and switch.

When the operator moves the wiper switch to the LOW position, battery voltage passes through the switch to circuit V3. Circuit V3 feeds the wiper motor low speed brushes. If the operator selects wiper HIGH speed operation, the wiper switch passes current to circuit V4. Circuit V4 feeds the wiper motor high speed brushes.

The DELAY portion of the wiper switch contains a variable resistor. The variable resistor connects to the intermittent wiper module through the wiper switch harness. The amount of delay selected by the operator determines the voltage drop through the resistor and the voltage level received by the intermittent wiper module.

After the intermittent wiper control module determines the amount of delay selected, it cycles the wipers by periodically energizing circuit V3. Circuit V3 powers the wiper motor low speed brushes.

As the windshield wiper motor turns, the park switch, internal to the motor, moves from its DOWN position to the UP position. When the wiper switch is turned OFF, the V5 circuit prevents the wipers from stopping in any position but park.

The windshield washer uses a pump motor located inside the windshield washer fluid reservoir. When the washer switch is pressed, power is supplied through the wiper switch to the pump motor on circuit V10. Circuit Z1 provides ground for the pump motor.

REAR WIPER SYSTEM

In the RUN position, the ignition switch connects circuit A1 from fuse 4 in the Power Distribution Center (PDC) with circuit A22. Circuit A22 connects to a fuse block in the bus bar that powers circuit V23 through the fuse in cavity 1.

Circuit V23 supplies power to the park switch in the rear wiper motor. Also, circuit V22 is crimped to circuit V23 at the rear wiper motor connector. Circuit V22 supplies current to the rear wiper switch.

In the WIPE or WASH positions, the rear wiper switch supplies voltage to the wiper motor on circuit V13. Circuit Z1 provides ground for the wiper motor.

The rear windshield washer uses a pump motor located inside the windshield washer fluid reservoir. When the rear wiper switch is pressed, power is supplied through the wiper switch to the pump motor on circuit V20. Circuit Z1 provides ground for the pump motor.

DIAGRAM INDEX

Component	Page
Circuit Breaker (Fuse Block Cavity 11)	8W-53-4, 5
Fuse 4 (PDC)	8W-53-3, 4, 5,
Fuse 4 (Fuse Block)	8W-53-4, 5
Fuse 7 (Fuse Block)	8W-53-4, 5
Ignition Switch	8W-53-3, 4, 5
Intermittent Wiper Control Module	8W-53-5
Intermittent Wiper Switch	8W-53-5
Rear Windshield Washer Pump Motor	8W-53-3
Rear Wiper Motor	8W-53-3
Standard Wiper Switch	8W-53-4
Windshield Washer Pump Motor	8W-53-4, 5
Wiper Motor	8W-53-4, 5

REAR WIPERS

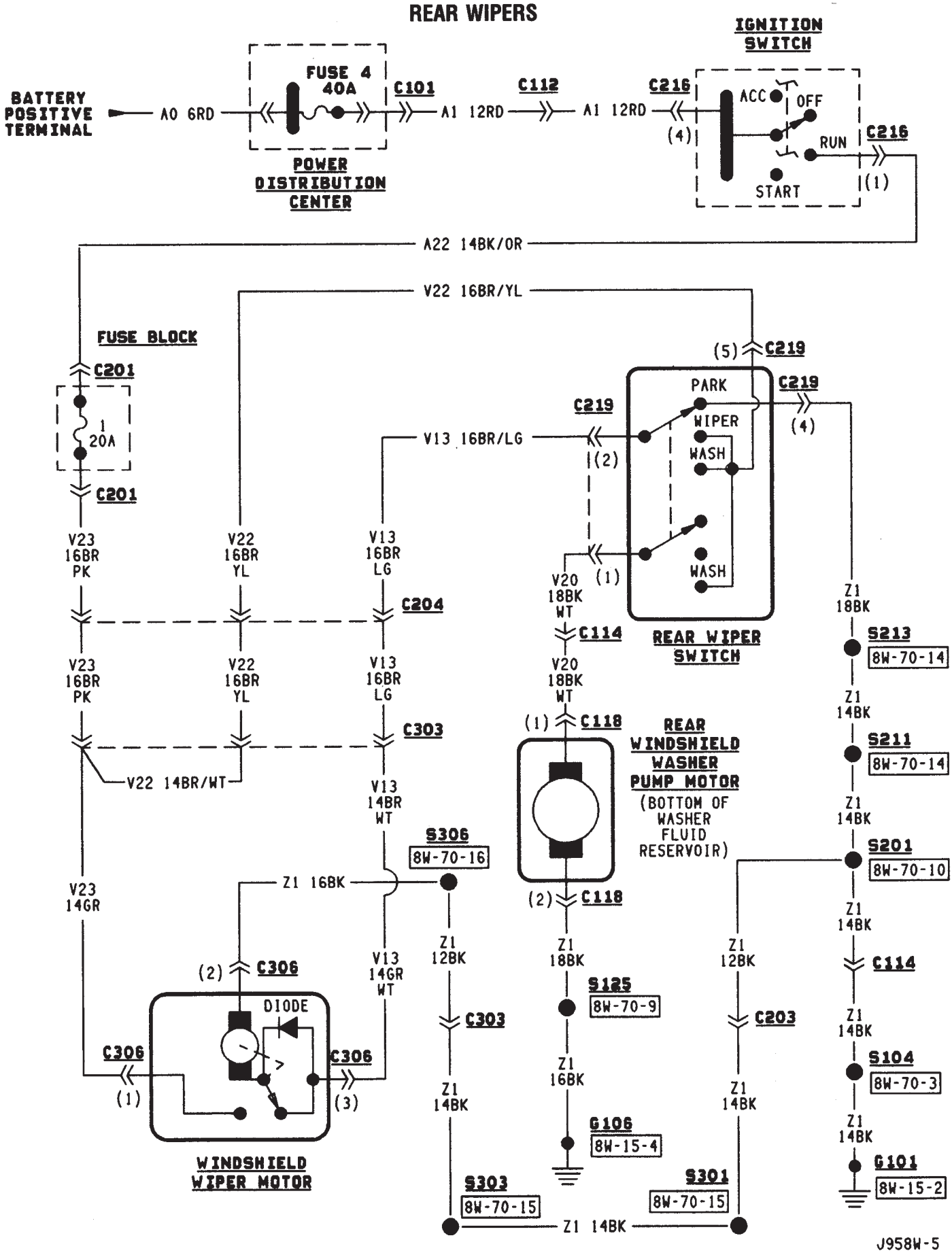
BATTERY POSITIVE TERMINAL
A0 6RD
FUSE 4 40A
C101
POWER DISTRIBUTION CENTER
A1 12RD
C112
A1 12RD
C216
IGNITION SWITCH
ACC
OFF
RUN
START
(4)
C216
(1)
A22 14BK/OR
V22 16BR/YL
FUSE BLOCK
C201
1 20A
C201
(5) C219
C219
PARK
WIPER
WASH
WASH
C219
(4)
C219
(2)
V13 16BR/LG
V20 18BK WT
(1)
C114
REAR WIPER SWITCH
V23 16BR PK
V22 16BR YL
V13 16BR LG
C204
V23 16BR PK
V22 16BR YL
V13 16BR LG
C303
V22 14BR/WT
V13 14BR WT
S306
8W-70-16
Z1 16BK
V23 14GR
(2) C306
DIODE
C306
C306
(1)
(3)
V13 14GR WT
WINDSHIELD WIPER MOTOR
Z1 12BK
C303
Z1 14BK
S303
8W-70-15
(1) C118
REAR WINDSHIELD WASHER PUMP MOTOR
(BOTTOM OF WASHER FLUID RESERVOIR)
(2) C118
Z1 18BK
S125
8W-70-9
Z1 16BK
G106
8W-15-4
Z1 12BK
C203
Z1 14BK
S301
8W-70-15
Z1 18BK
S213
8W-70-14
Z1 14BK
S211
8W-70-14
Z1 14BK
S201
8W-70-10
Z1 14BK
C114
Z1 14BK
S104
8W-70-3
Z1 14BK
G101
8W-15-2
Z1 14BK
J958W-5

STANDARD

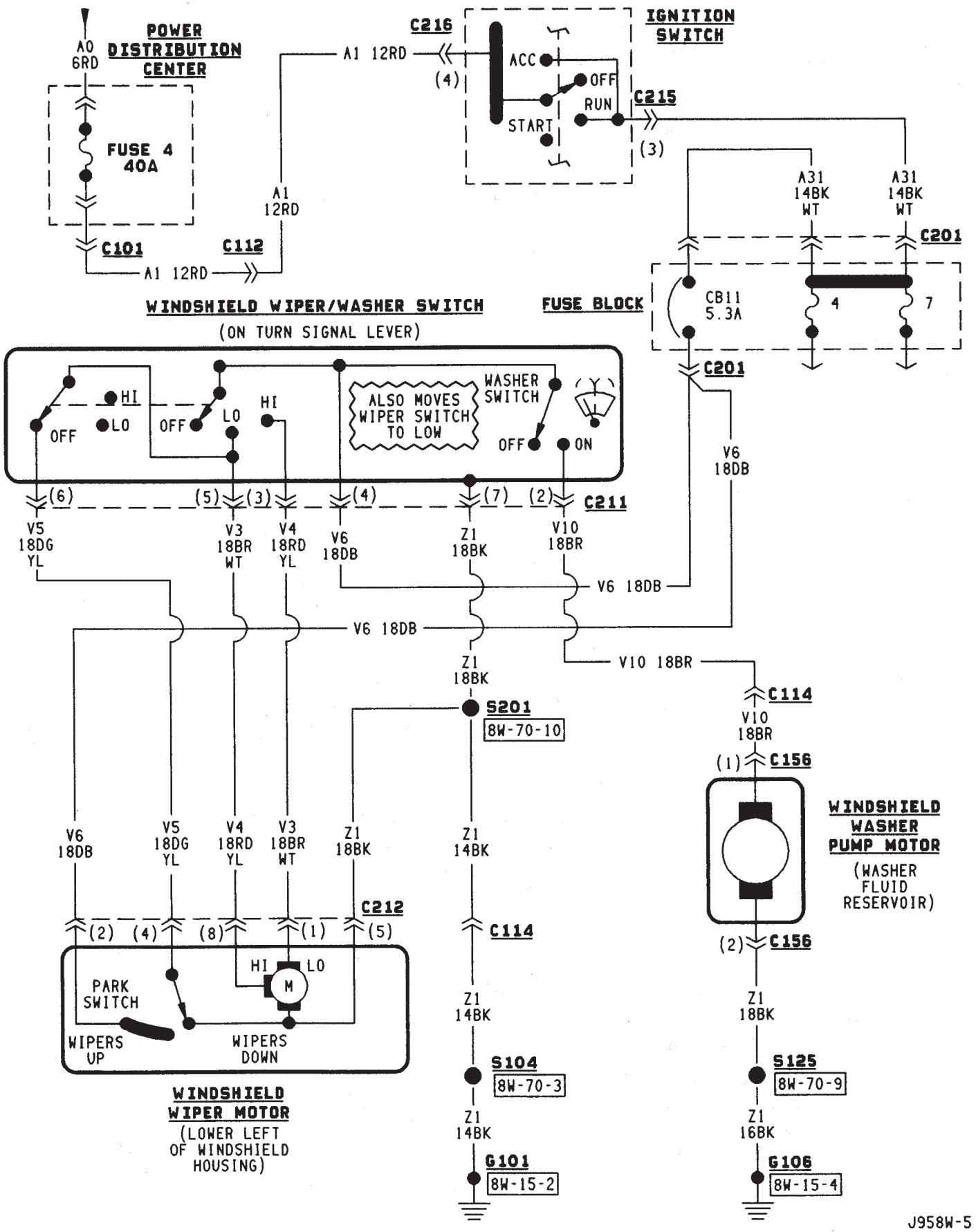

J958W-5

INTERMITTENT

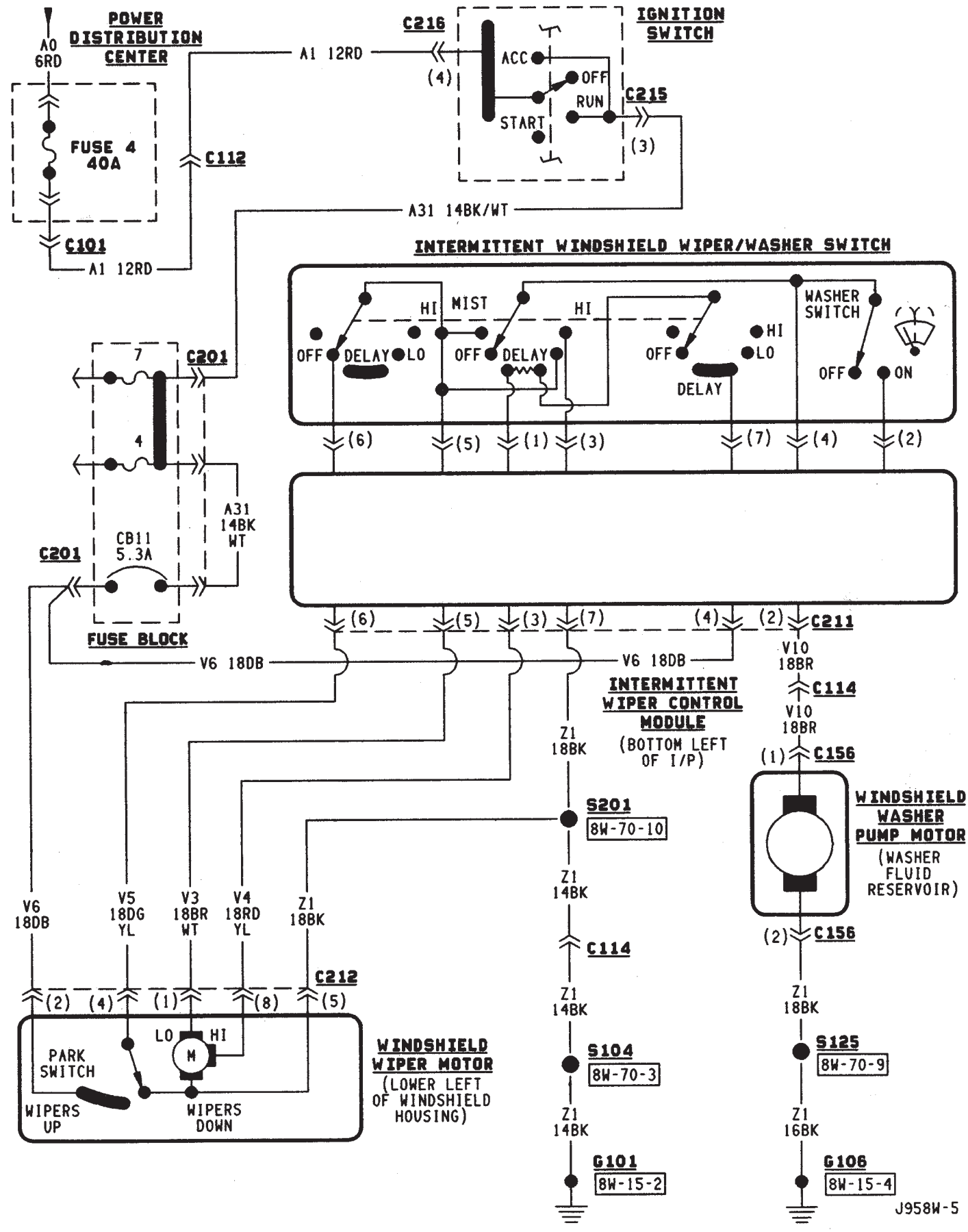

SPLICE INFORMATION

GENERAL INFORMATION

This section identifies all splices in the wiring diagrams. It also shows the splices in their entirety. All circuits that are part of the splices are shown, and the systems they affect are referenced. For viewing the location of each splice in the vehicle, refer to Section 8W-95.

SPLICE INDEX

Component	Page
S101	8W-70-2
S102	8W-70-2
S103	8W-70-2
S104	8W-70-3
S105	8W-70-3
S106	8W-70-3
S107	8W-70-4
S108	8W-70-4
S109	8W-70-4
S110	8W-70-5
S111	8W-70-5
S112	8W-70-5
S113	8W-70-5
S114	8W-70-6
S115	8W-70-6
S116	8W-70-6
S117	8W-70-7
S118	8W-70-7
S119	8W-70-7
S120	8W-70-8
S121	8W-70-8
S122	8W-70-8
S123	8W-70-8
S124	8W-70-8
S125	8W-70-9
S126	8W-70-9
S127	8W-70-9
S128	8W-70-9
S129	8W-70-10
S201	8W-70-10
S202	8W-70-10
S203	8W-70-11
S204	8W-70-11
S207	8W-70-12
S208	8W-70-12
S209	8W-70-13
S210	8W-70-13
S211	8W-70-14
S212	8W-70-14
S213	8W-70-14
S301	8W-70-15
S302	8W-70-15
S303	8W-70-15
S304	8W-70-15
S305	8W-70-16
S306	8W-70-16
S307	8W-70-16
S308	8W-70-16

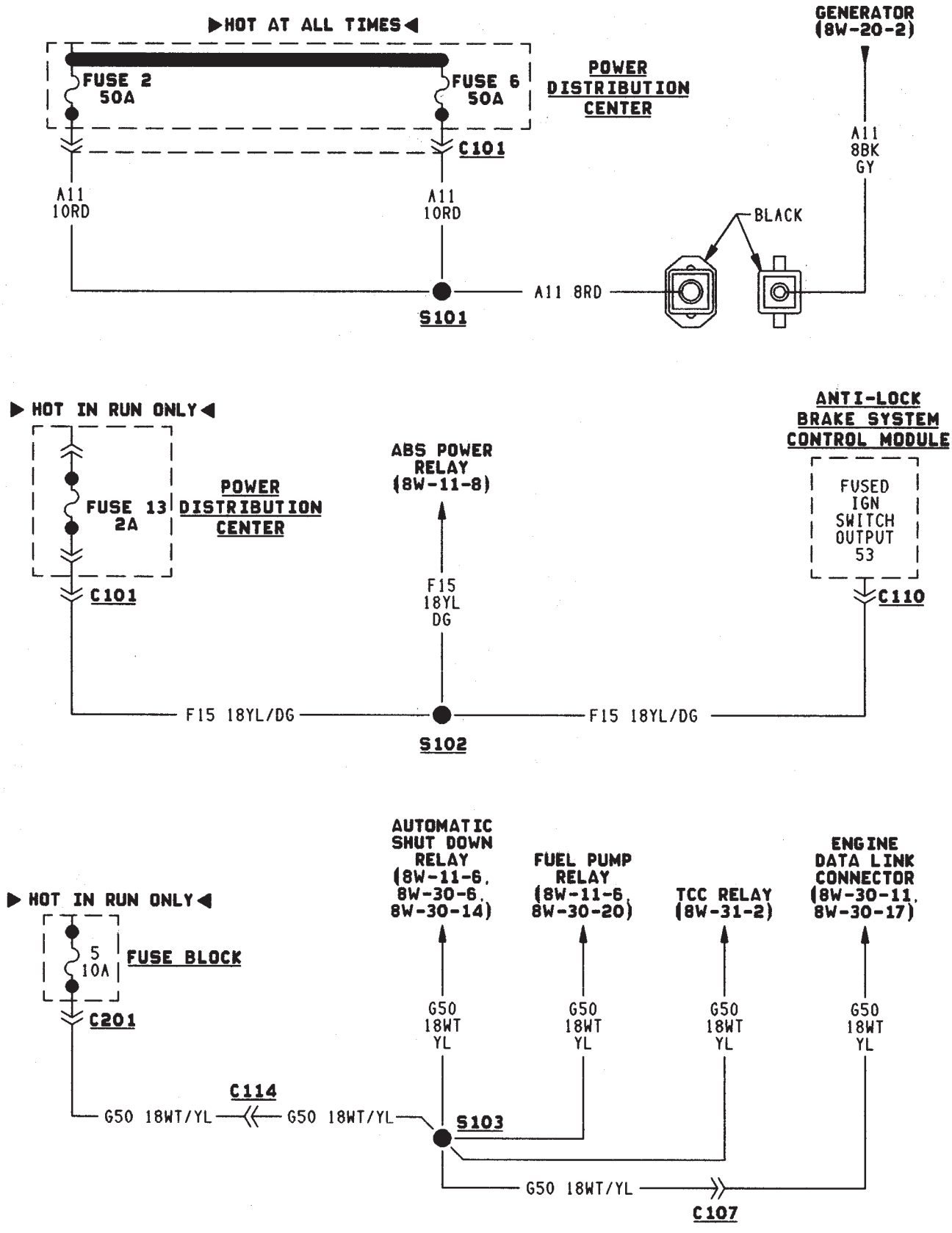
▶HOT AT ALL TIMES◀
FUSE 2
50A
FUSE 6
50A
POWER
DISTRIBUTION
CENTER
C101
A11
10RD
A11
10RD
GENERATOR
(8W-20-2)
A11
8BK
GY
BLACK
A11 8RD
S101
▶ HOT IN RUN ONLY◀
FUSE 13
2A
POWER
DISTRIBUTION
CENTER
C101
ABS POWER
RELAY
(8W-11-8)
F15
18YL
DG
ANTI-LOCK
BRAKE SYSTEM
CONTROL MODULE
FUSED
IGN
SWITCH
OUTPUT
53
C110
F15 18YL/DG
F15 18YL/DG
S102
▶ HOT IN RUN ONLY◀
5
10A
FUSE BLOCK
C201
AUTOMATIC
SHUT DOWN
RELAY
(8W-11-6,
8W-30-6,
8W-30-14)
FUEL PUMP
RELAY
(8W-11-6,
8W-30-20)
TCC RELAY
(8W-31-2)
ENGINE
DATA LINK
CONNECTOR
(8W-30-11,
8W-30-17)
G50
18WT
YL
G50
18WT
YL
G50
18WT
YL
G50
18WT
YL
C114
G50 18WT/YL
G50 18WT/YL
S103
G50 18WT/YL
C107

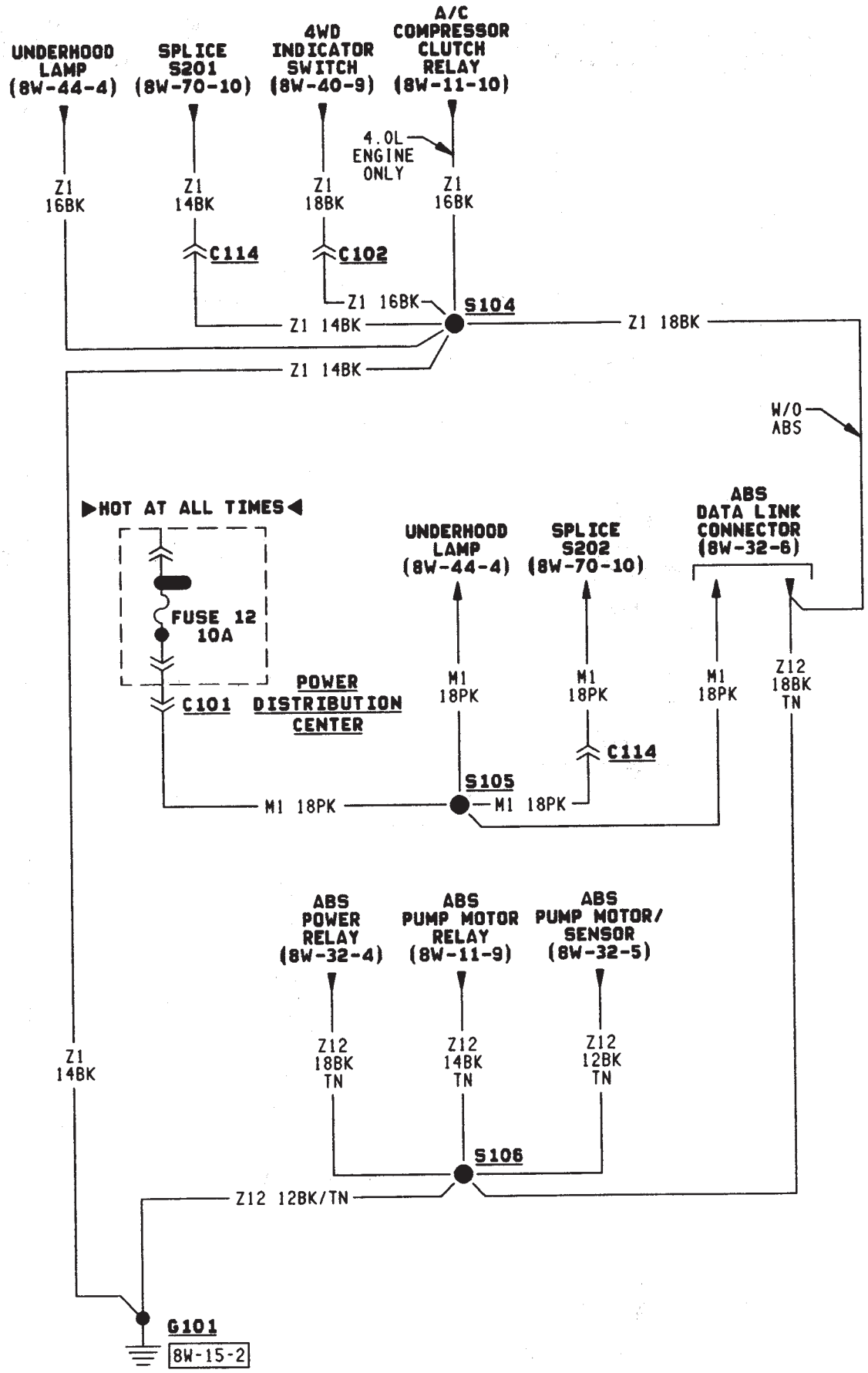
UNDERHOOD LAMP (8W-44-4)
SPLICE S201 (8W-70-10)
4WD INDICATOR SWITCH (8W-40-9)
A/C COMPRESSOR CLUTCH RELAY (8W-11-10)
4.0L ENGINE ONLY
Z1 16BK
Z1 14BK
Z1 18BK
Z1 16BK
C114
C102
Z1 16BK
S104
Z1 14BK
Z1 18BK
Z1 14BK
W/O ABS
▶HOT AT ALL TIMES◀
FUSE 12 10A
C101
POWER DISTRIBUTION CENTER
UNDERHOOD LAMP (8W-44-4)
SPLICE S202 (8W-70-10)
ABS DATA LINK CONNECTOR (8W-32-6)
M1 18PK
M1 18PK
M1 18PK
Z12 18BK TN
C114
S105
M1 18PK
M1 18PK
ABS POWER RELAY (8W-32-4)
ABS PUMP MOTOR RELAY (8W-11-9)
ABS PUMP MOTOR/ SENSOR (8W-32-5)
Z1 14BK
Z12 18BK TN
Z12 14BK TN
Z12 12BK TN
S106
Z12 12BK/TN
G101
8W-15-2

J958W-5

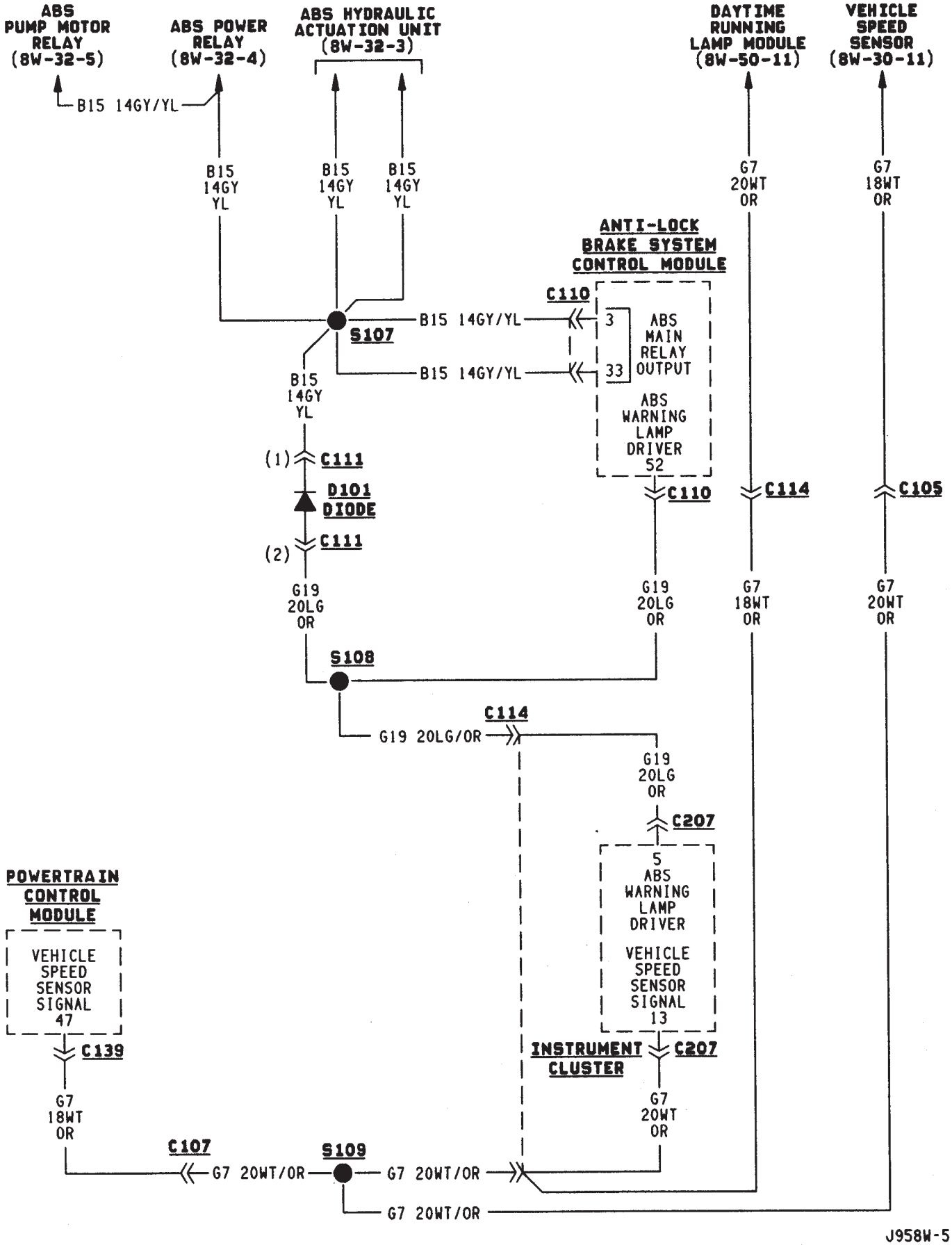
ABS PUMP MOTOR RELAY (8W-32-5)
ABS POWER RELAY (8W-32-4)
ABS HYDRAULIC ACTUATION UNIT (8W-32-3)
DAYTIME RUNNING LAMP MODULE (8W-50-11)
VEHICLE SPEED SENSOR (8W-30-11)
B15 14GY/YL
B15 14GY YL
G7 20WT OR
G7 18WT OR
ANTI-LOCK BRAKE SYSTEM CONTROL MODULE
C110
3
33
ABS MAIN RELAY OUTPUT
ABS WARNING LAMP DRIVER 52
S107
(1)
C111
D101 DIODE
(2)
G19 20LG OR
S108
C114
G19 20LG/OR
C207
5
ABS WARNING LAMP DRIVER
VEHICLE SPEED SENSOR SIGNAL 13
POWERTRAIN CONTROL MODULE
VEHICLE SPEED SENSOR SIGNAL 47
C139
INSTRUMENT CLUSTER
C105
C107
S109
G7 20WT/OR
J958W-5

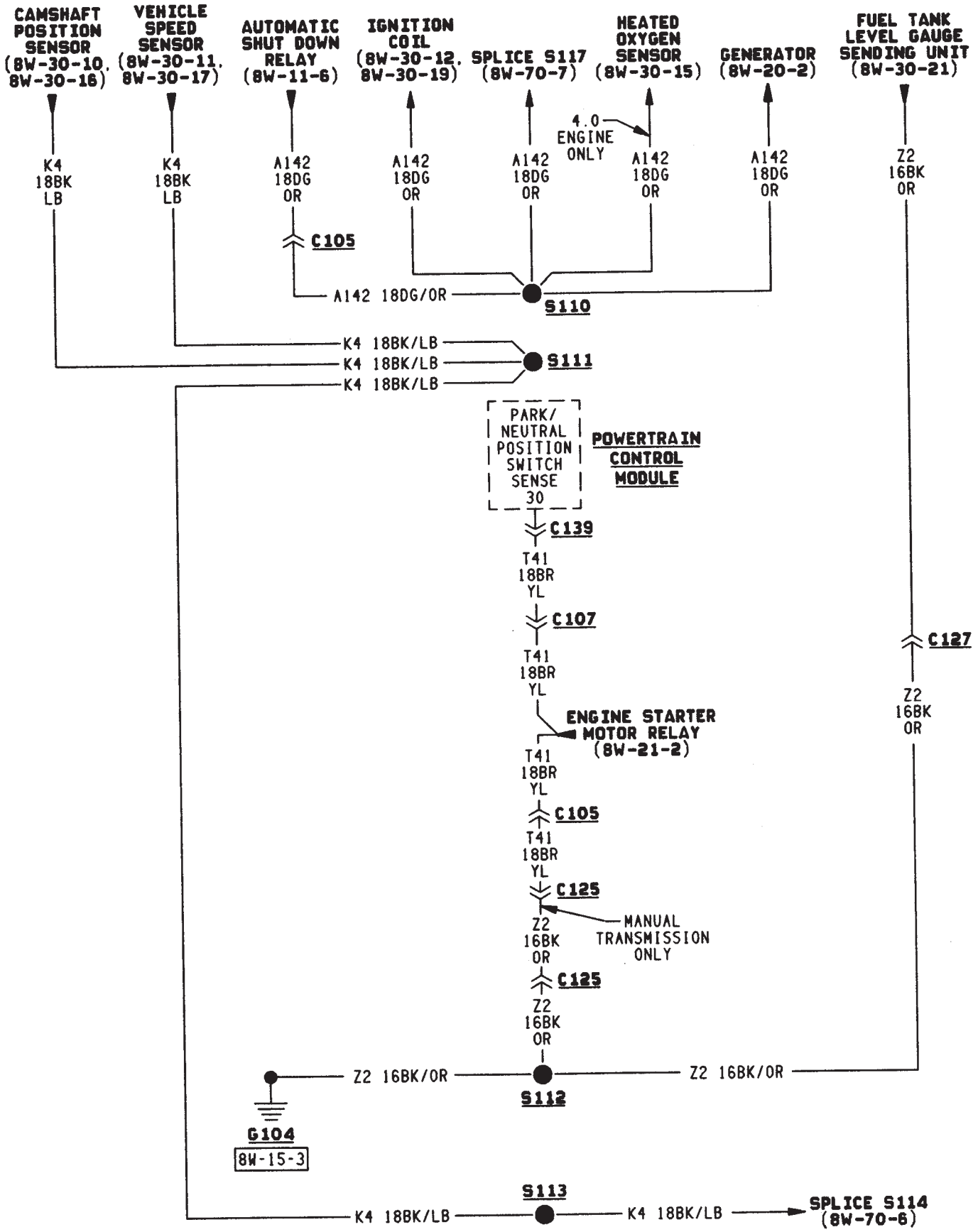
CAMSHAFT POSITION SENSOR (8W-30-10, 8W-30-16)
VEHICLE SPEED SENSOR (8W-30-11, 8W-30-17)
AUTOMATIC SHUT DOWN RELAY (8W-11-6)
IGNITION COIL (8W-30-12, 8W-30-19)
SPLICE S117 (8W-70-7)
HEATED OXYGEN SENSOR (8W-30-15)
GENERATOR (8W-20-2)
FUEL TANK LEVEL GAUGE SENDING UNIT (8W-30-21)
4.0 ENGINE ONLY
K4 18BK LB
K4 18BK LB
A142 18DG OR
A142 18DG OR
A142 18DG OR
A142 18DG OR
A142 18DG OR
Z2 16BK OR
C105
A142 18DG/OR
S110
K4 18BK/LB
K4 18BK/LB
K4 18BK/LB
S111
PARK/ NEUTRAL POSITION SWITCH SENSE 30
POWERTRAIN CONTROL MODULE
C139
T41 18BR YL
C107
T41 18BR YL
ENGINE STARTER MOTOR RELAY (8W-21-2)
T41 18BR YL
C105
T41 18BR YL
C125
Z2 16BK OR
MANUAL TRANSMISSION ONLY
C125
Z2 16BK OR
C127
Z2 16BK OR
Z2 16BK/OR
Z2 16BK/OR
S112
G104
8W-15-3
S113
K4 18BK/LB
K4 18BK/LB
SPLICE S114 (8W-70-6)

J958W-5

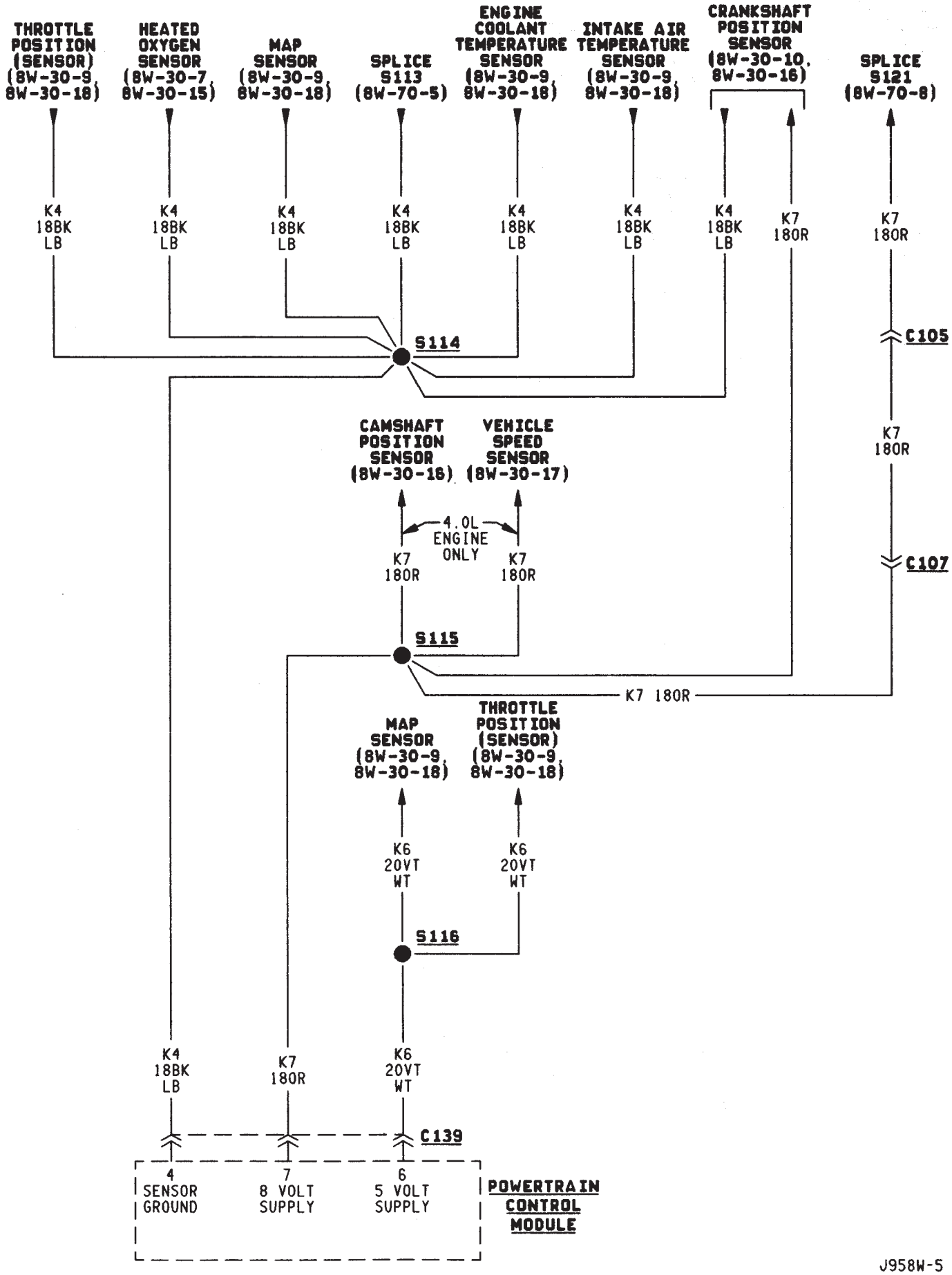
THROTTLE POSITION (SENSOR) (8W-30-9, 8W-30-18)
HEATED OXYGEN SENSOR (8W-30-7, 8W-30-15)
MAP SENSOR (8W-30-9, 8W-30-18)
SPLICE S113 (8W-70-5)
ENGINE COOLANT TEMPERATURE SENSOR (8W-30-9, 8W-30-18)
INTAKE AIR TEMPERATURE SENSOR (8W-30-9, 8W-30-18)
CRANKSHAFT POSITION SENSOR (8W-30-10, 8W-30-16)
SPLICE S121 (8W-70-8)
K4 18BK LB
K7 180R
S114
C105
CAMSHAFT POSITION SENSOR (8W-30-16)
VEHICLE SPEED SENSOR (8W-30-17)
4.0L ENGINE ONLY
C107
S115
MAP SENSOR (8W-30-9, 8W-30-18)
THROTTLE POSITION (SENSOR) (8W-30-9, 8W-30-18)
K6 20VT WT
S116
C139
4 SENSOR GROUND
7 8 VOLT SUPPLY
6 5 VOLT SUPPLY
POWERTRAIN CONTROL MODULE
J958W-5

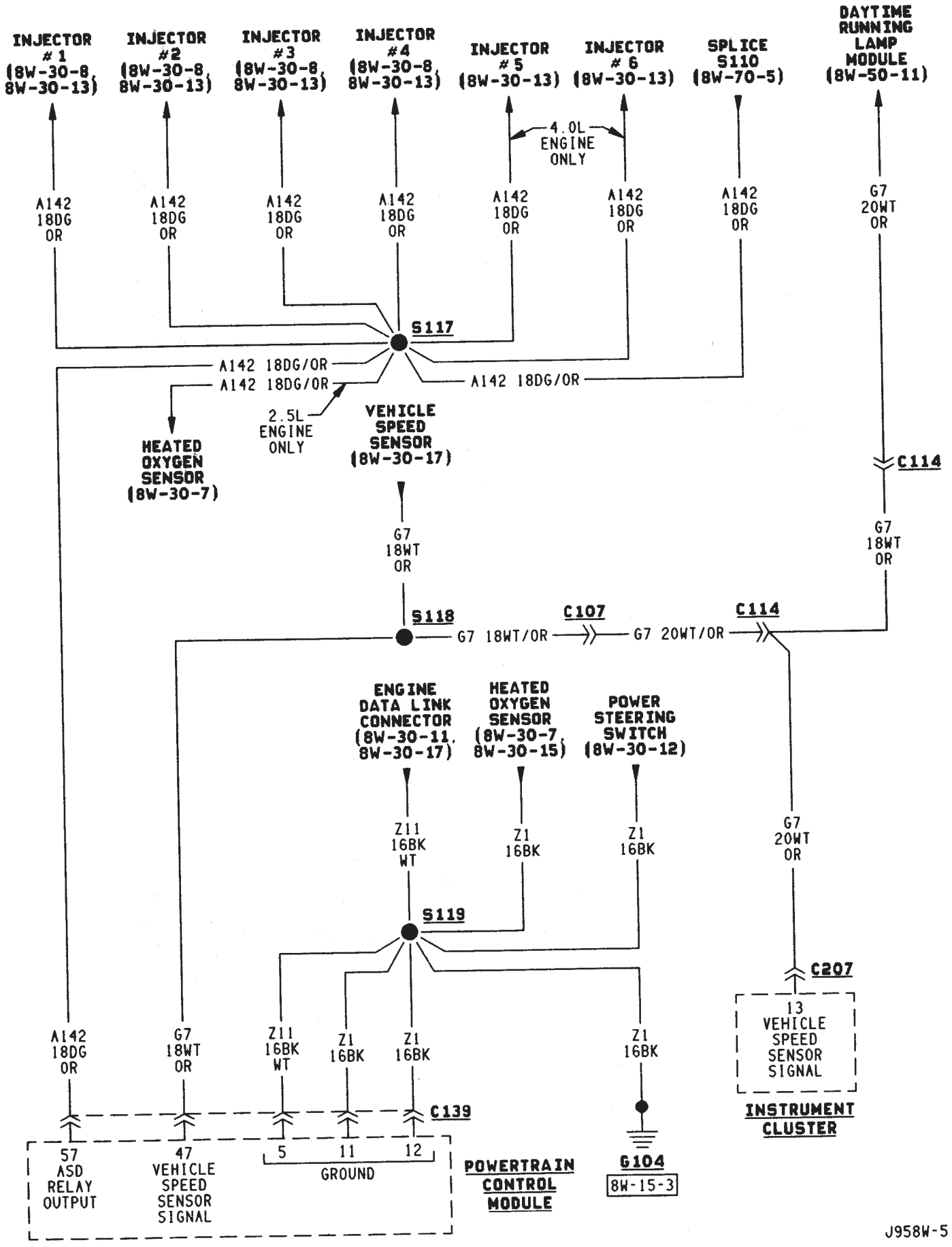
INJECTOR #1 (8W-30-8, 8W-30-13)
INJECTOR #2 (8W-30-8, 8W-30-13)
INJECTOR #3 (8W-30-8, 8W-30-13)
INJECTOR #4 (8W-30-8, 8W-30-13)
INJECTOR #5 (8W-30-13)
INJECTOR #6 (8W-30-13)
SPLICE S110 (8W-70-5)
DAYTIME RUNNING LAMP MODULE (8W-50-11)
4.0L ENGINE ONLY
A142 18DG OR
G7 20WT OR
S117
A142 18DG/OR
HEATED OXYGEN SENSOR (8W-30-7)
2.5L ENGINE ONLY
VEHICLE SPEED SENSOR (8W-30-17)
C114
G7 18WT OR
S118
C107
G7 18WT/OR
G7 20WT/OR
ENGINE DATA LINK CONNECTOR (8W-30-11, 8W-30-17)
HEATED OXYGEN SENSOR (8W-30-7, 8W-30-15)
POWER STEERING SWITCH (8W-30-12)
Z11 16BK WT
Z1 16BK
S119
C207
13 VEHICLE SPEED SENSOR SIGNAL
INSTRUMENT CLUSTER
Z11 16BK WT
C139
57 ASD RELAY OUTPUT
47 VEHICLE SPEED SENSOR SIGNAL
5 11 12 GROUND
POWERTRAIN CONTROL MODULE
G104
8W-15-3
J958W-5

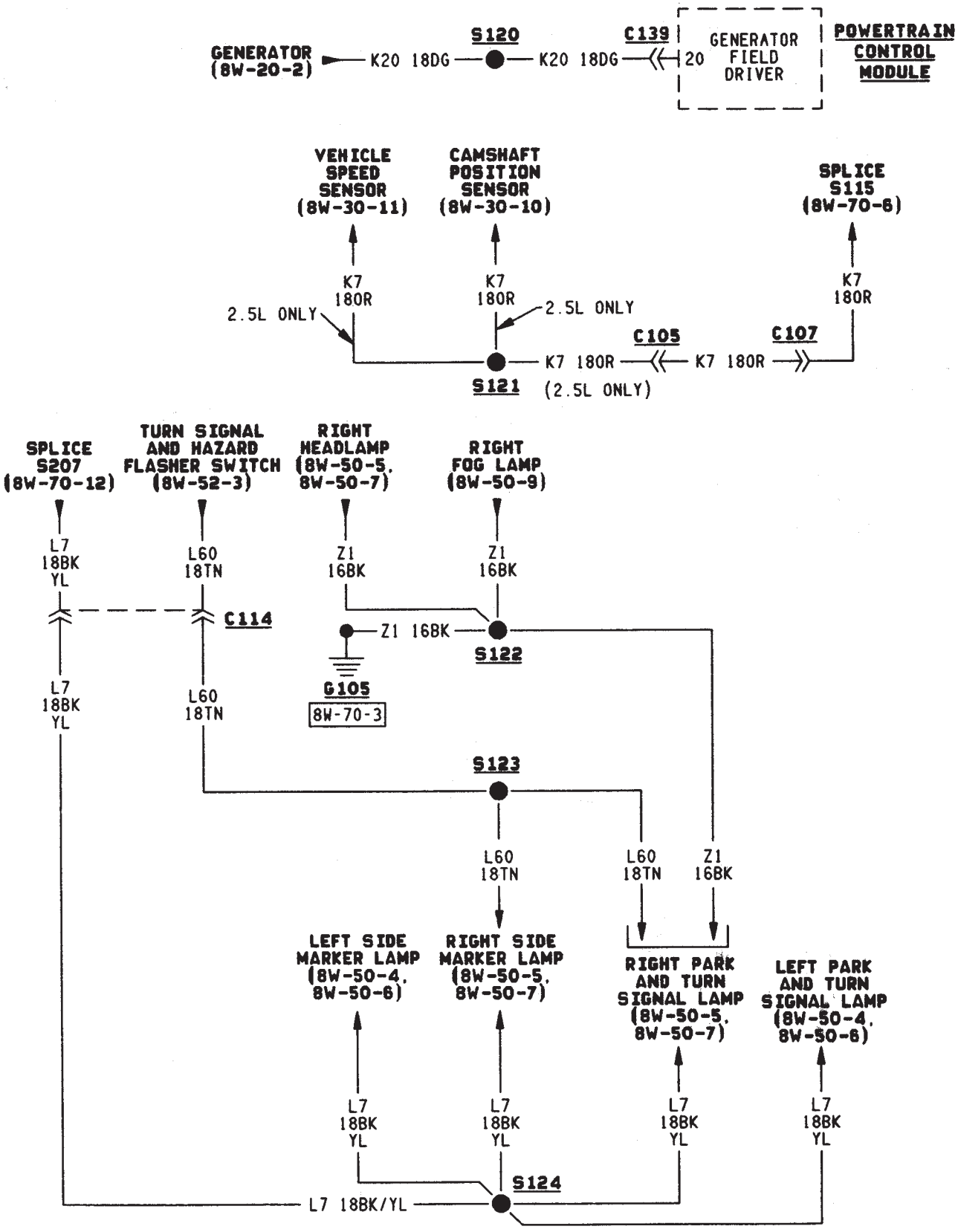
GENERATOR (8W-20-2)
K20 18DG
S120
K20 18DG
C139
20
GENERATOR FIELD DRIVER
POWERTRAIN CONTROL MODULE
VEHICLE SPEED SENSOR (8W-30-11)
CAMSHAFT POSITION SENSOR (8W-30-10)
SPLICE S115 (8W-70-6)
K7 180R
2.5L ONLY
2.5L ONLY
C105
C107
S121
(2.5L ONLY)
SPLICE S207 (8W-70-12)
TURN SIGNAL AND HAZARD FLASHER SWITCH (8W-52-3)
RIGHT HEADLAMP (8W-50-5, 8W-50-7)
RIGHT FOG LAMP (8W-50-9)
L7 18BK YL
L60 18TN
Z1 16BK
C114
S122
G105
8W-70-3
S123
LEFT SIDE MARKER LAMP (8W-50-4, 8W-50-6)
RIGHT SIDE MARKER LAMP (8W-50-5, 8W-50-7)
RIGHT PARK AND TURN SIGNAL LAMP (8W-50-5, 8W-50-7)
LEFT PARK AND TURN SIGNAL LAMP (8W-50-4, 8W-50-6)
S124
L7 18BK/YL

J958W-5

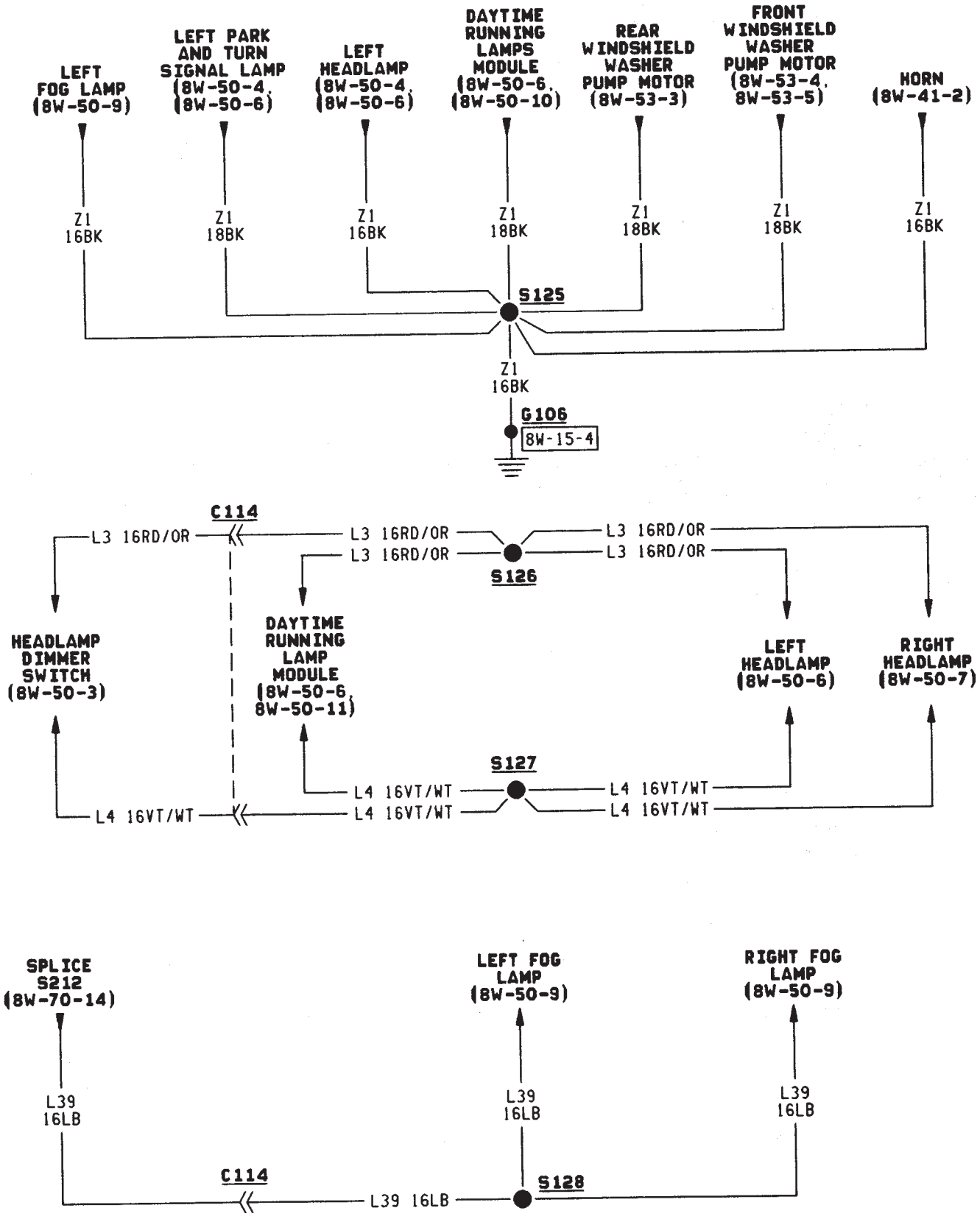
LEFT FOG LAMP (8W-50-9)
LEFT PARK AND TURN SIGNAL LAMP (8W-50-4, 8W-50-6)
LEFT HEADLAMP (8W-50-4, 8W-50-6)
DAYTIME RUNNING LAMPS MODULE (8W-50-6, 8W-50-10)
REAR WINDSHIELD WASHER PUMP MOTOR (8W-53-3)
FRONT WINDSHIELD WASHER PUMP MOTOR (8W-53-4, 8W-53-5)
HORN (8W-41-2)
Z1 16BK
Z1 18BK
Z1 16BK
Z1 18BK
Z1 18BK
Z1 18BK
Z1 16BK
S125
Z1 16BK
G106
8W-15-4
C114
L3 16RD/OR
L3 16RD/OR
L3 16RD/OR
L3 16RD/OR
L3 16RD/OR
S126
HEADLAMP DIMMER SWITCH (8W-50-3)
DAYTIME RUNNING LAMP MODULE (8W-50-6, 8W-50-11)
LEFT HEADLAMP (8W-50-6)
RIGHT HEADLAMP (8W-50-7)
S127
L4 16VT/WT
L4 16VT/WT
L4 16VT/WT
L4 16VT/WT
L4 16VT/WT
SPLICE S212 (8W-70-14)
LEFT FOG LAMP (8W-50-9)
RIGHT FOG LAMP (8W-50-9)
L39 16LB
L39 16LB
L39 16LB
C114
L39 16LB
S128

J958W-5

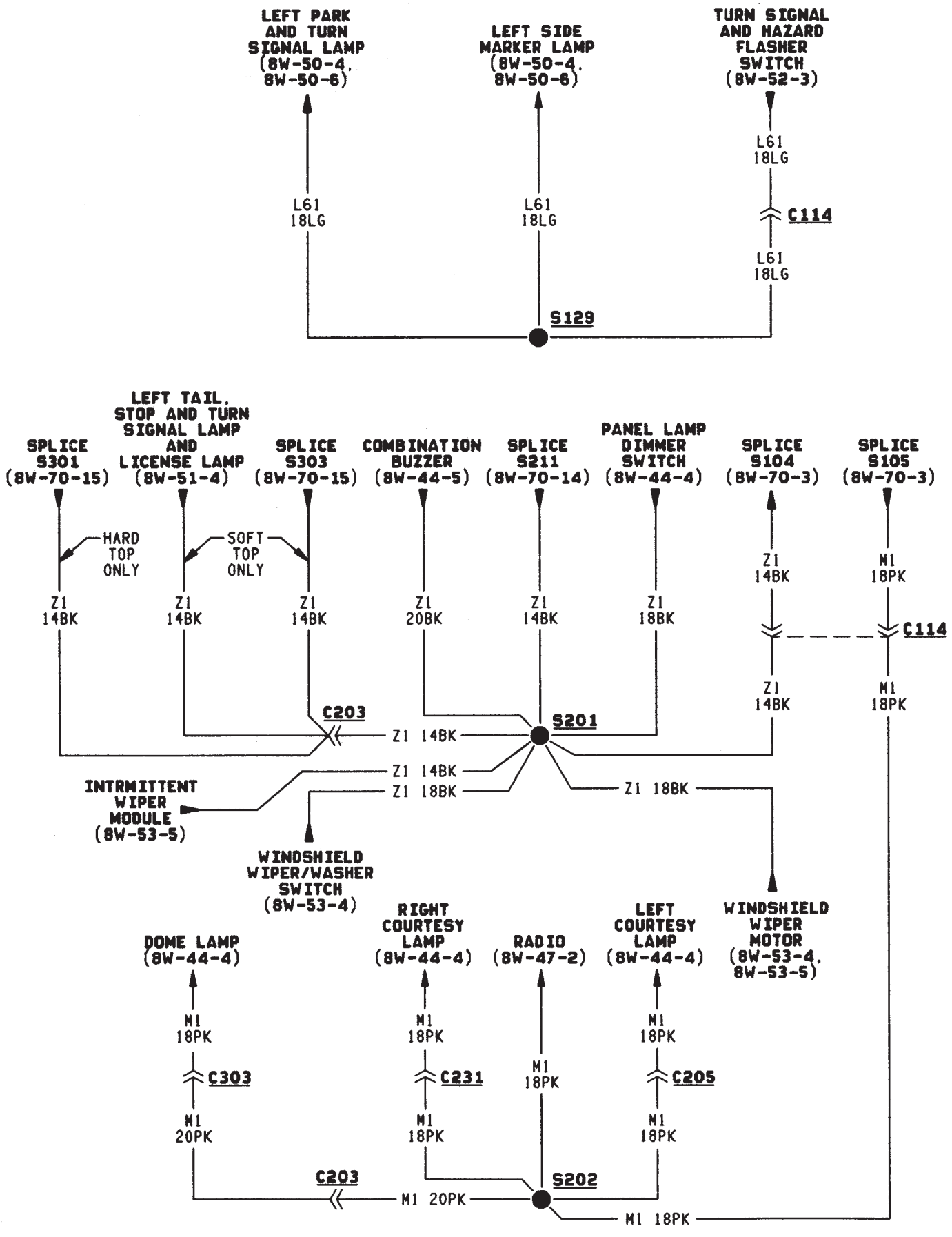
LEFT PARK AND TURN SIGNAL LAMP (8W-50-4, 8W-50-6)
LEFT SIDE MARKER LAMP (8W-50-4, 8W-50-6)
TURN SIGNAL AND HAZARD FLASHER SWITCH (8W-52-3)
L61 18LG
L61 18LG
L61 18LG
C114
L61 18LG
S129
LEFT TAIL, STOP AND TURN SIGNAL LAMP AND LICENSE LAMP (8W-51-4)
SPLICE S301 (8W-70-15)
SPLICE S303 (8W-70-15)
COMBINATION BUZZER (8W-44-5)
SPLICE S211 (8W-70-14)
PANEL LAMP DIMMER SWITCH (8W-44-4)
SPLICE S104 (8W-70-3)
SPLICE S105 (8W-70-3)
HARD TOP ONLY
SOFT TOP ONLY
Z1 14BK
Z1 14BK
Z1 14BK
Z1 20BK
Z1 14BK
Z1 18BK
Z1 14BK
M1 18PK
C114
Z1 14BK
M1 18PK
C203
Z1 14BK
S201
Z1 14BK
Z1 18BK
Z1 18BK
INTRMITTENT WIPER MODULE (8W-53-5)
WINDSHIELD WIPER/WASHER SWITCH (8W-53-4)
DOME LAMP (8W-44-4)
RIGHT COURTESY LAMP (8W-44-4)
RADIO (8W-47-2)
LEFT COURTESY LAMP (8W-44-4)
WINDSHIELD WIPER MOTOR (8W-53-4, 8W-53-5)
M1 18PK
M1 18PK
M1 18PK
M1 18PK
C303
C231
C205
M1 20PK
M1 18PK
M1 18PK
C203
S202
M1 20PK
M1 18PK

J958W-5

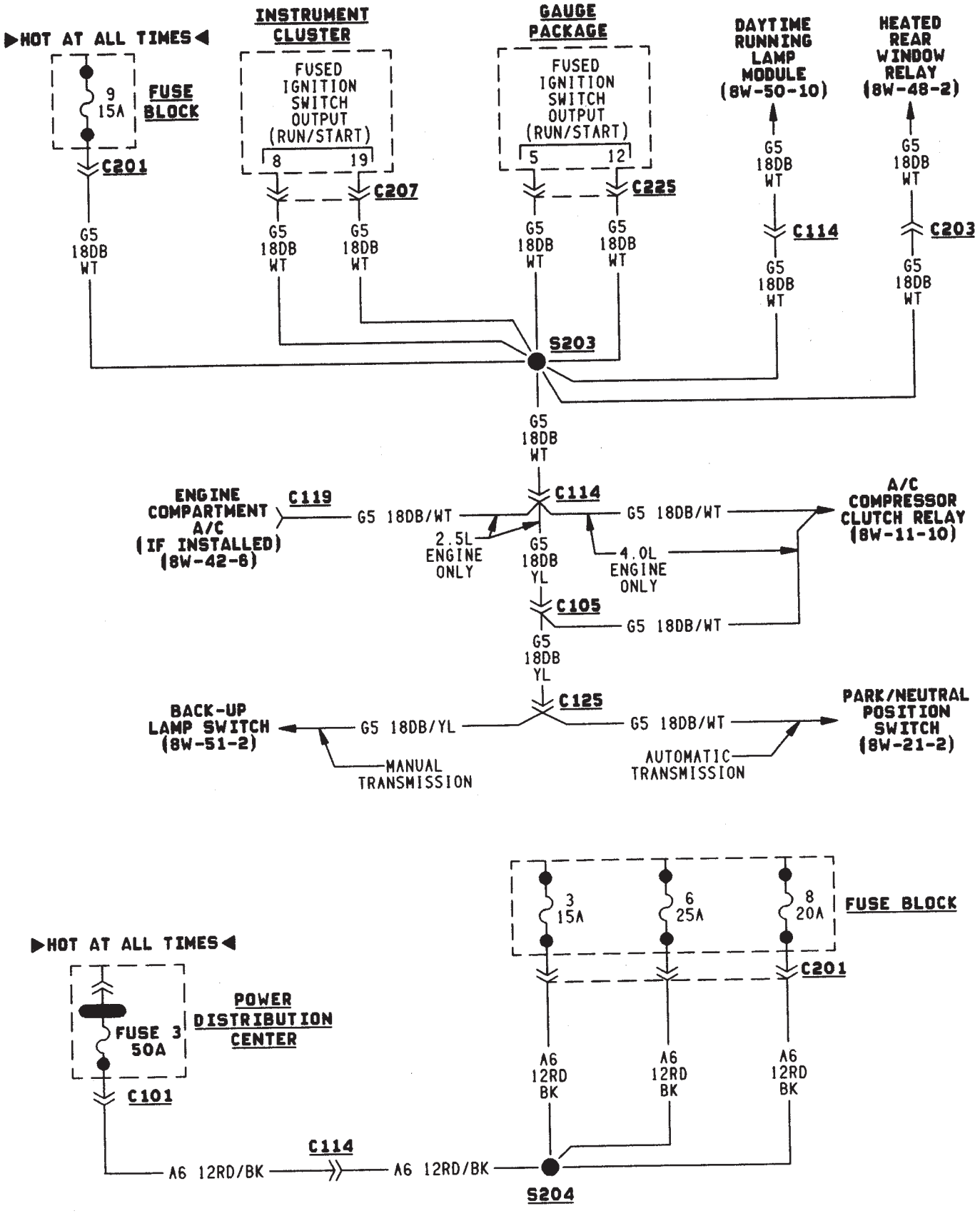
▶HOT AT ALL TIMES◀
9
15A
FUSE BLOCK
C201
G5
18DB
WT
INSTRUMENT CLUSTER
FUSED IGNITION SWITCH OUTPUT (RUN/START)
8
19
C207
GAUGE PACKAGE
FUSED IGNITION SWITCH OUTPUT (RUN/START)
5
12
C225
DAYTIME RUNNING LAMP MODULE (8W-50-10)
C114
HEATED REAR WINDOW RELAY (8W-48-2)
C203
S203
C114
ENGINE COMPARTMENT A/C (IF INSTALLED) (8W-42-6)
C119
G5 18DB/WT
2.5L ENGINE ONLY
G5 18DB YL
4.0L ENGINE ONLY
A/C COMPRESSOR CLUTCH RELAY (8W-11-10)
C105
C125
BACK-UP LAMP SWITCH (8W-51-2)
G5 18DB/YL
MANUAL TRANSMISSION
AUTOMATIC TRANSMISSION
PARK/NEUTRAL POSITION SWITCH (8W-21-2)
▶HOT AT ALL TIMES◀
FUSE 3
50A
POWER DISTRIBUTION CENTER
C101
3
15A
6
25A
8
20A
FUSE BLOCK
C201
A6
12RD
BK
C114
A6 12RD/BK
S204

J958W-5

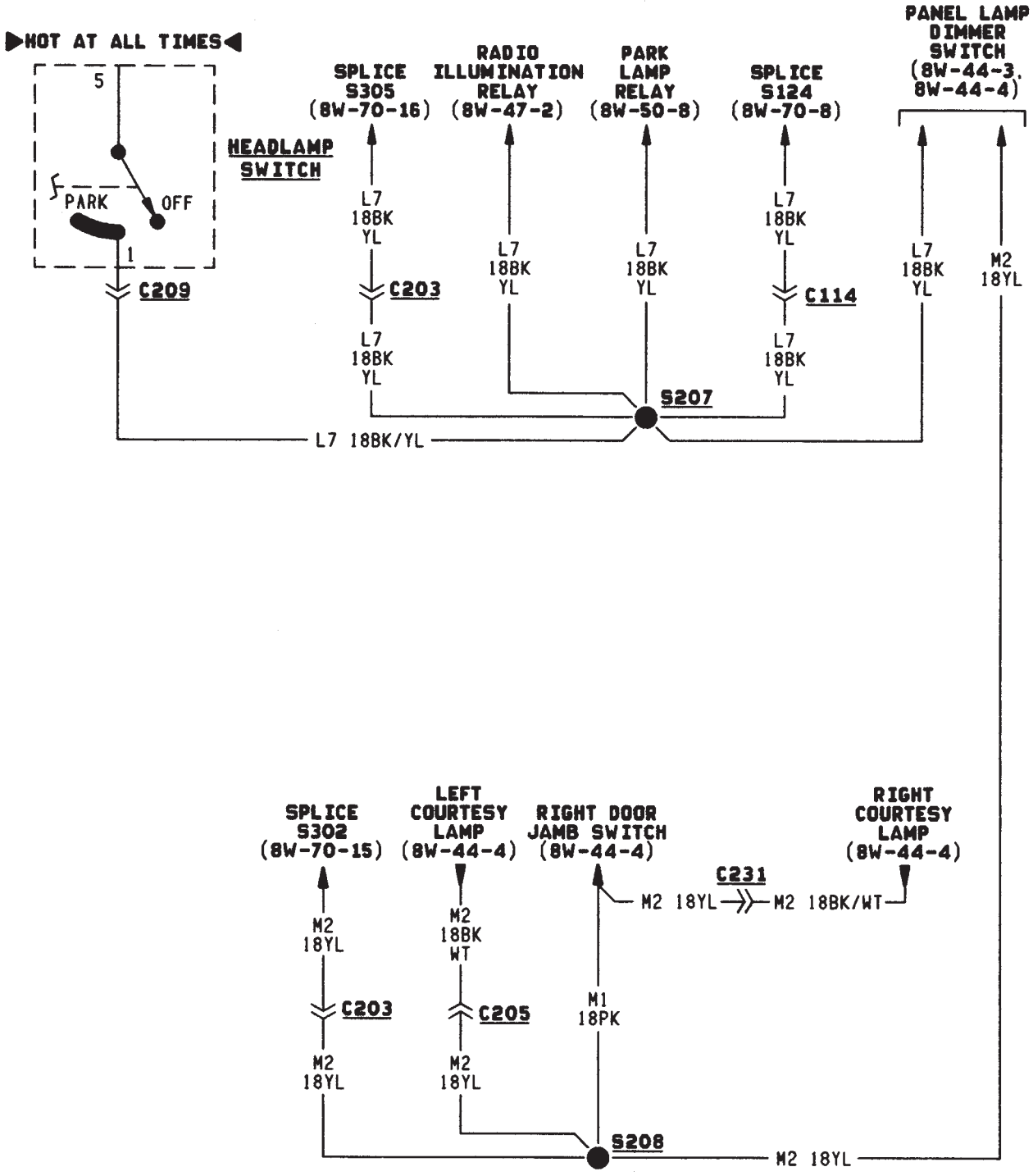
▶HOT AT ALL TIMES◀
5
PARK
OFF
1
C209
HEADLAMP SWITCH
SPLICE S305 (8W-70-16)
RADIO ILLUMINATION RELAY (8W-47-2)
PARK LAMP RELAY (8W-50-8)
SPLICE S124 (8W-70-8)
PANEL LAMP DIMMER SWITCH (8W-44-3, 8W-44-4)
L7 18BK YL
C203
C114
S207
L7 18BK/YL
M2 18YL
SPLICE S302 (8W-70-15)
LEFT COURTESY LAMP (8W-44-4)
RIGHT DOOR JAMB SWITCH (8W-44-4)
RIGHT COURTESY LAMP (8W-44-4)
C231
M2 18YL
M2 18BK/WT
M2 18BK WT
C205
M1 18PK
S208

J958W-5

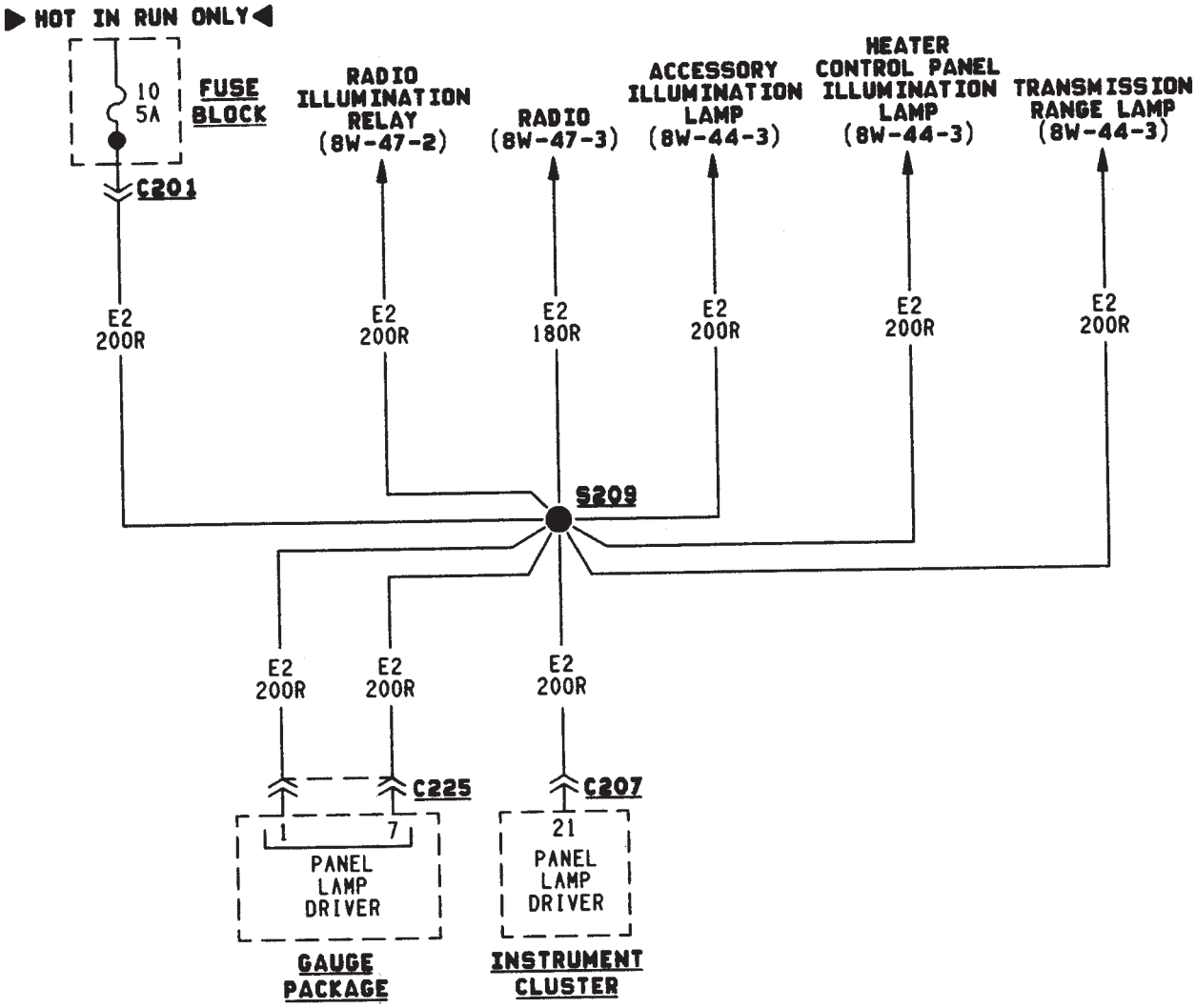
▶ HOT IN RUN ONLY◀
10
5A
FUSE BLOCK
C201
RADIO ILLUMINATION RELAY (8W-47-2)
RADIO (8W-47-3)
ACCESSORY ILLUMINATION LAMP (8W-44-3)
HEATER CONTROL PANEL ILLUMINATION LAMP (8W-44-3)
TRANSMISSION RANGE LAMP (8W-44-3)
E2 200R
E2 200R
E2 180R
E2 200R
E2 200R
E2 200R
S209
E2 200R
E2 200R
E2 200R
C225
C207
1
7
21
PANEL LAMP DRIVER
PANEL LAMP DRIVER
GAUGE PACKAGE
INSTRUMENT CLUSTER

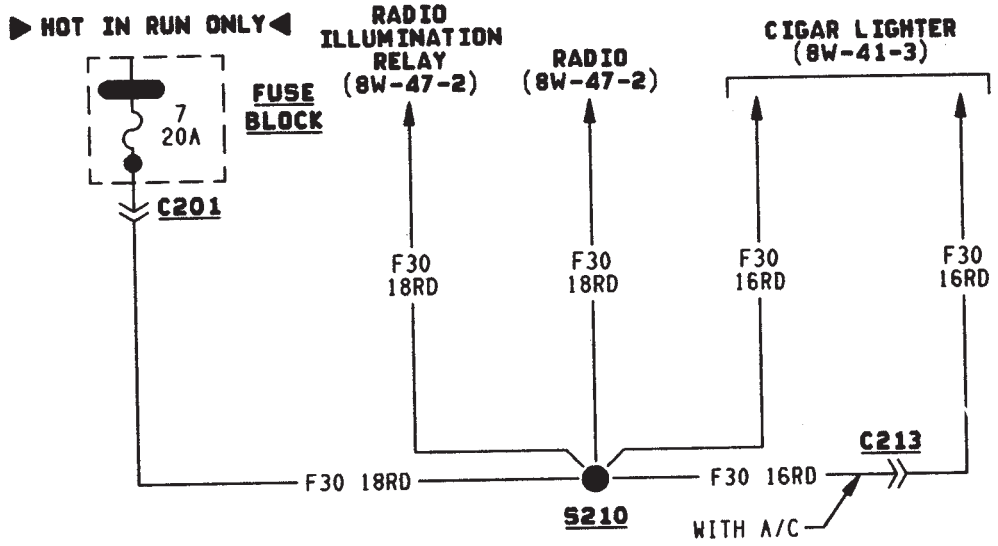
▶ HOT IN RUN ONLY◀
7
20A
FUSE BLOCK
C201
RADIO ILLUMINATION RELAY (8W-47-2)
RADIO (8W-47-2)
CIGAR LIGHTER (8W-41-3)
F30 18RD
F30 18RD
F30 16RD
F30 16RD
C213
F30 18RD
F30 16RD
S210
WITH A/C

J958W-5

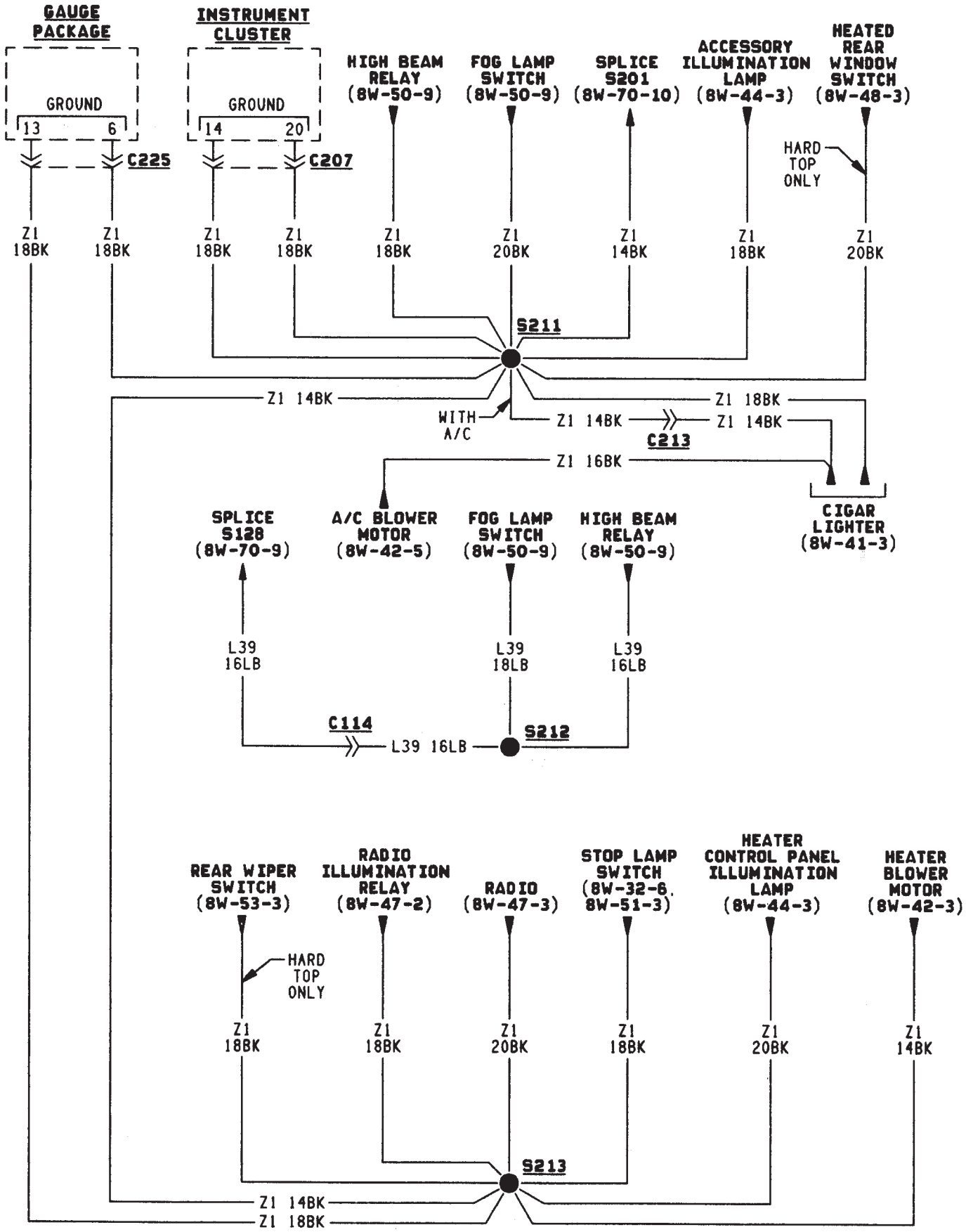
GAUGE PACKAGE
GROUND
13
6
C225
INSTRUMENT CLUSTER
GROUND
14
20
C207
HIGH BEAM RELAY (8W-50-9)
FOG LAMP SWITCH (8W-50-9)
SPLICE S201 (8W-70-10)
ACCESSORY ILLUMINATION LAMP (8W-44-3)
HEATED REAR WINDOW SWITCH (8W-48-3)
HARD TOP ONLY
Z1 18BK
Z1 18BK
Z1 18BK
Z1 18BK
Z1 18BK
Z1 20BK
Z1 14BK
Z1 18BK
Z1 20BK
S211
Z1 14BK
Z1 18BK
WITH A/C
Z1 14BK
Z1 14BK
C213
Z1 16BK
SPLICE S128 (8W-70-9)
A/C BLOWER MOTOR (8W-42-5)
FOG LAMP SWITCH (8W-50-9)
HIGH BEAM RELAY (8W-50-9)
CIGAR LIGHTER (8W-41-3)
L39 16LB
L39 18LB
L39 16LB
C114
L39 16LB
S212
REAR WIPER SWITCH (8W-53-3)
RADIO ILLUMINATION RELAY (8W-47-2)
RADIO (8W-47-3)
STOP LAMP SWITCH (8W-32-6, 8W-51-3)
HEATER CONTROL PANEL ILLUMINATION LAMP (8W-44-3)
HEATER BLOWER MOTOR (8W-42-3)
HARD TOP ONLY
Z1 18BK
Z1 18BK
Z1 20BK
Z1 18BK
Z1 20BK
Z1 14BK
S213
Z1 14BK
Z1 18BK

J958W-5

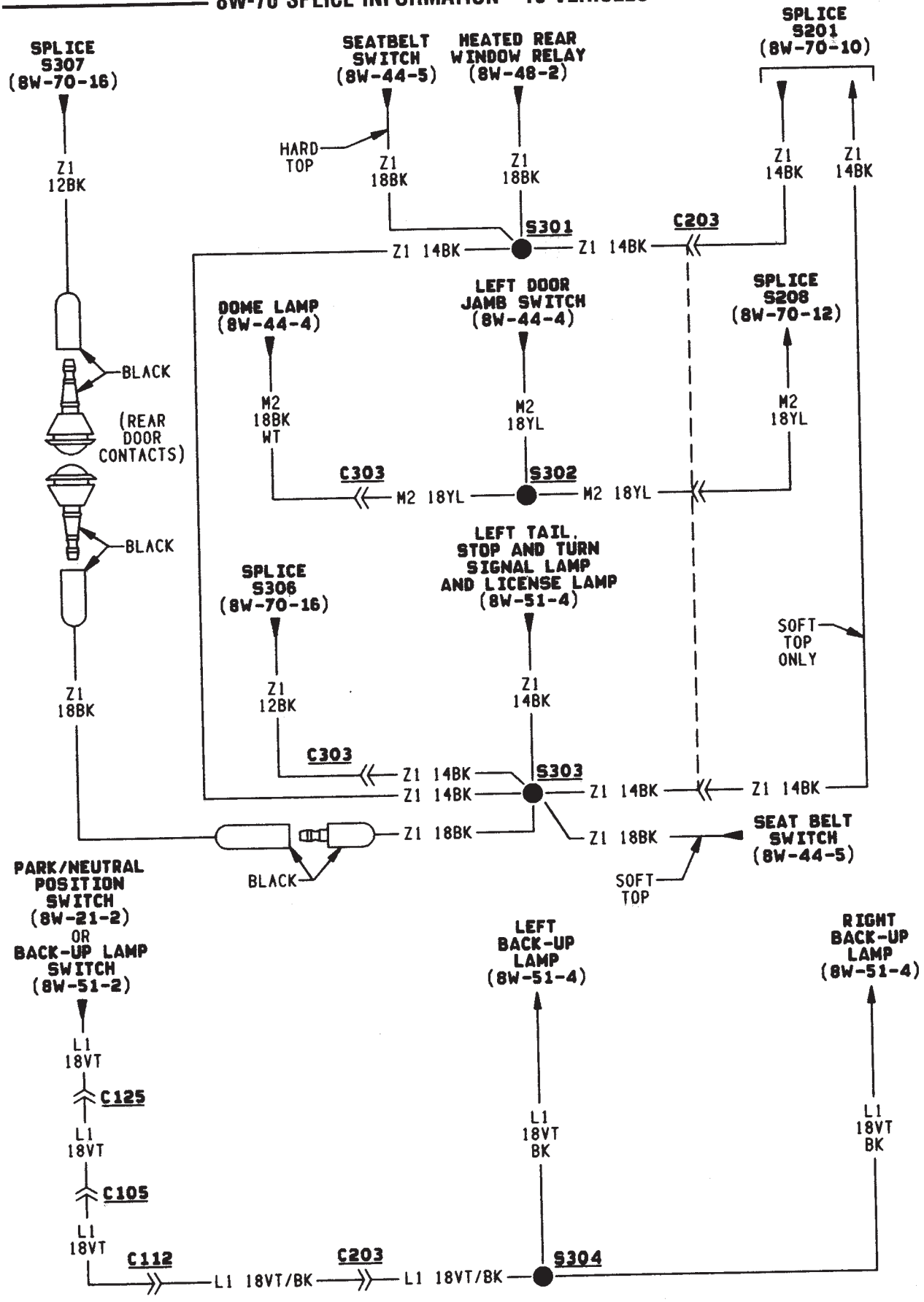
SPLICE S307 (8W-70-16)
Z1 12BK
BLACK
(REAR DOOR CONTACTS)
BLACK
Z1 18BK
SEATBELT SWITCH (8W-44-5)
HARD TOP
Z1 18BK
HEATED REAR WINDOW RELAY (8W-48-2)
Z1 18BK
SPLICE S201 (8W-70-10)
Z1 14BK
Z1 14BK
S301
C203
Z1 14BK
Z1 14BK
DOME LAMP (8W-44-4)
M2 18BK WT
LEFT DOOR JAMB SWITCH (8W-44-4)
M2 18YL
SPLICE S208 (8W-70-12)
M2 18YL
C303
S302
M2 18YL
M2 18YL
SPLICE S306 (8W-70-16)
Z1 12BK
LEFT TAIL, STOP AND TURN SIGNAL LAMP AND LICENSE LAMP (8W-51-4)
Z1 14BK
SOFT TOP ONLY
C303
Z1 14BK
S303
Z1 14BK
Z1 14BK
Z1 14BK
Z1 18BK
Z1 18BK
SEAT BELT SWITCH (8W-44-5)
BLACK
SOFT TOP
PARK/NEUTRAL POSITION SWITCH (8W-21-2)
OR
BACK-UP LAMP SWITCH (8W-51-2)
L1 18VT
C125
L1 18VT
C105
L1 18VT
C112
L1 18VT/BK
C203
L1 18VT/BK
LEFT BACK-UP LAMP (8W-51-4)
L1 18VT BK
S304
RIGHT BACK-UP LAMP (8W-51-4)
L1 18VT BK

J958W-5

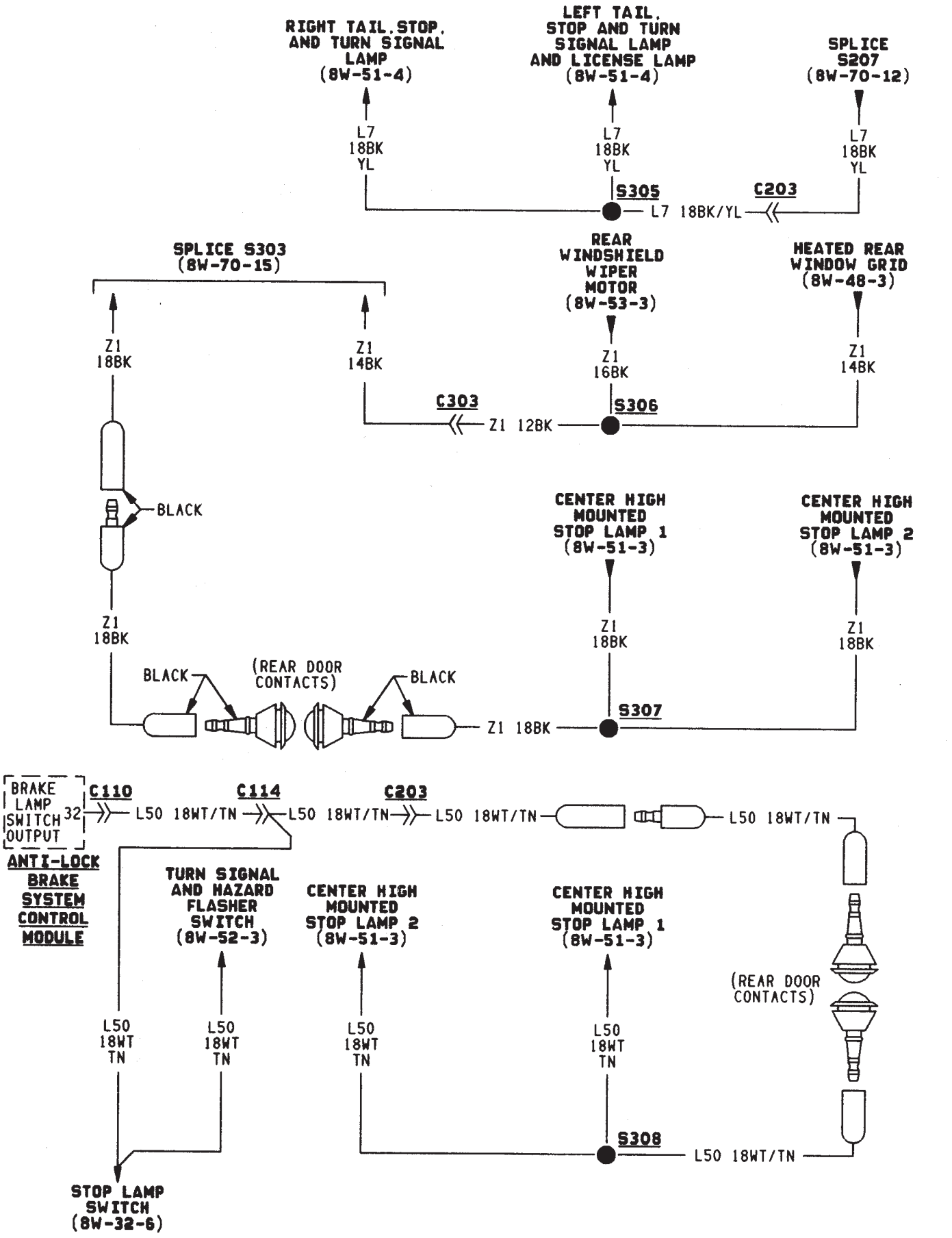
RIGHT TAIL, STOP, AND TURN SIGNAL LAMP (8W-51-4)
LEFT TAIL, STOP AND TURN SIGNAL LAMP AND LICENSE LAMP (8W-51-4)
SPLICE S207 (8W-70-12)
L7 18BK YL
S305
C203
L7 18BK/YL
SPLICE S303 (8W-70-15)
REAR WINDSHIELD WIPER MOTOR (8W-53-3)
HEATED REAR WINDOW GRID (8W-48-3)
Z1 18BK
Z1 14BK
Z1 16BK
C303
S306
Z1 12BK
BLACK
CENTER HIGH MOUNTED STOP LAMP 1 (8W-51-3)
CENTER HIGH MOUNTED STOP LAMP 2 (8W-51-3)
(REAR DOOR CONTACTS)
S307
BRAKE LAMP SWITCH OUTPUT
32
C110
C114
C203
L50 18WT/TN
ANTI-LOCK BRAKE SYSTEM CONTROL MODULE
TURN SIGNAL AND HAZARD FLASHER SWITCH (8W-52-3)
S308
STOP LAMP SWITCH (8W-32-6)

J958W-5

CONNECTOR PIN OUTS

GENERAL INFORMATION

The pages referenced in this section show the connector, the circuits in the connector, and the pin that circuit occupies. Individual connector numbers are referenced on diagram pages throughout Group 8W.

CONNECTOR LOCATIONS

Component	Page
C101	8W-80-3
C102	8W-80-3
C103	8W-80-3
C104	8W-80-3
C105	8W-80-3
C106	8W-80-4
C107	8W-80-4
C108	8W-80-4
C109	8W-80-4
C110	8W-80-5
C111	8W-80-6
C112	8W-80-6
C113	8W-80-6
C114	8W-80-7, 8
C115	8W-80-9
C116	8W-80-9
C117	8W-80-9
C118	8W-80-9
C119	8W-80-9
C120	8W-80-10
C121	8W-80-10
C122	8W-80-10
C123	8W-80-10
C124	8W-80-10
C125	8W-80-11
C126	8W-80-11
C127	8W-80-11
C128	8W-80-11
C129	8W-80-11
C130	8W-80-12
C131	8W-80-12
C132	8W-80-12
C133	8W-80-12
C134	8W-80-12
C135	8W-80-13
C136	8W-80-13
C137	8W-80-13
C138	8W-80-13
C139 (2.5L Engine)	8W-80-14
C139 (4.0L Engine)	8W-80-15
C140	8W-80-16
C141	8W-80-16
C142	8W-80-16
C143	8W-80-16
C144	8W-80-16
C145	8W-80-17
C146	8W-80-17
C147	8W-80-17
C148	8W-80-17
C149	8W-80-17
C150	8W-80-18
C151	8W-80-18
C152	8W-80-18
C153	8W-80-18
C154	8W-80-19
C155	8W-80-19
C156	8W-80-19
C201	8W-80-20
C202	8W-80-20
C203	8W-80-20
C204	8W-80-20
C205	8W-80-21
C206	8W-80-21
C207	8W-80-21
C208	8W-80-21
C209	8W-80-22
C210	8W-80-22
C211	8W-80-22
C212	8W-80-22
C213	8W-80-23
C214	8W-80-23
C215	8W-80-23
C216	8W-80-23
C217	8W-80-23
C218	8W-80-24
C219	8W-80-24
C220	8W-80-24
C221	8W-80-24
C222	8W-80-24
C223	8W-80-25
C224	8W-80-25
C225	8W-80-25
C226	8W-80-25
C227	8W-80-26
C228	8W-80-26
C229	8W-80-26
C230	8W-80-26
C231	8W-80-26
C232	8W-80-27
C233	8W-80-27
C301	8W-80-27
C302	8W-80-27
C303	8W-80-28
C304	8W-80-28

Component	Page
C305	8W-80-28
C306	8W-80-28
C307	8W-80-29
C308	8W-80-29
C309	8W-80-29
C310	8W-80-29
C401	8W-80-29
C402	8W-80-30
C404	8W-80-30
C405	8W-80-30
C406	8W-80-30
C407	8W-80-30

C101

POWER DISTRIBUTION CENTER

(SEE 8W-11-2)

C102

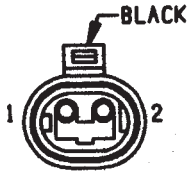

CAV	CIRCUIT
1	G1 18DG/GY
2	Z1 18BK

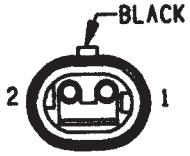

CAV	CIRCUIT
1	G1 18DG/GY
2	Z1 18BK

C103

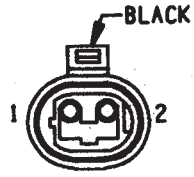

RIGHT FRONT WHEEL SPEED SENSOR

	CAV	CIRCUIT	FUNCTION
*	1	B7 18WT	RIGHT FRONT WHEEL SPEED SENSOR (+)
*	2	B6 18WT/DB	RIGHT FRONT WHEEL SPEED SENSOR (−)

C104

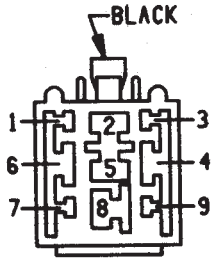

TCC RELAY

CAV	CIRCUIT	FUNCTION
1	—	—
2	T22 16DB/TN	TCC RELAY OUTPUT
3	—	—
4	G50 18WT/YL	FUSED IGNITION SWITCH OUTPUT
5	—	—
6	K54 200R/BK	TCC SOLENOID CONTROL
7	—	—
8	A14 16RD/WT	FUSED B(+)
9	—	—

C105

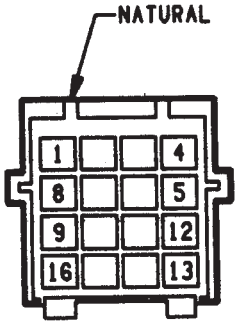

	CAV	CIRCUIT	
	1	T40 14BR	
	2	C3 18DB/BK	
	3	A141 16DG/BK	
	4	G4 18DB	
	5	L1 18VT	
	6	C20 18BR/RD	
	7	C21 18DB/YL	4.0L
	7	G7 20WT/OR	2.5L
	8	A142 18DG/OR	
	9	G5 18DB/WT	
	10	T41 18BR/YL	
*	11	B4 18LG	4.0L
	11	K7 18OR	2.5L
*	12	B3 18LG/DB	
	13	T22 16DB/TN	
	14	G60 18GY/YL	
*	15	B2 18YL	
*	16	B1 18YL/DB	

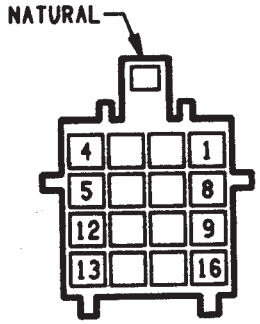

	CAV	CIRCUIT	
	1	T40 14BR	
	2	C3 18DB/BK	
	3	A141 16DG/BK	
	4	G4 18DB	
	5	L1 18VT	
	6	C20 18BR/RD	
	7	C21 18DB/YL	4.0L
	7	G7 18WT/OR	2.5L
	8	A142 18DG/OR	
	9	G5 18DB/WT	
	10	T41 18BR/YL	
*	11	B4 18LG	4.0L
	11	K7 18OR	2.5L
*	12	B3 18LG/DB	
	13	T22 16DB/TN	
	14	G60 18GY/YL	
*	15	B2 18YL	
*	16	B1 18YL/DB	

* — INDICATES TWISTED PAIRS (B1 & B2, B3 & B4, B6 & B7)

J958W-5

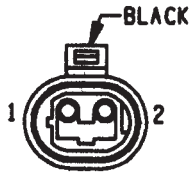

UNDERHOOD LAMP

C106

CAV	CIRCUIT	FUNCTION
1	M1 18PK	FUSED B(+)
2	Z1 16BK	GROUND

C107

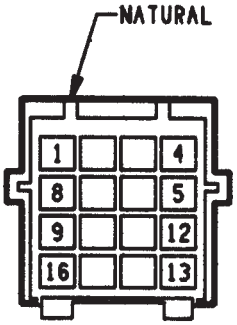

	CAV	CIRCUIT	
	1	C20 18BR/RD	
	2	C91 18LB	
	3	A14 16RD/WT	
	4	C13 18DB/OR	
	5	T41 18BR/YL	
	6	G20 18VT/YL	
	7	G50 18WT/YL	
	8	G3 20BK/PK	
	9	V40 18WT/PK	
	10	K51 18DB/YL	
	11	K54 20OR/BK	
	12	G21 20GY/LB	
*	13	D20 20LG	
*	14	D21 20PK	
	15	G7 20WT/OR	
	16	—	4.0L
	16	K7 18OR	2.5L

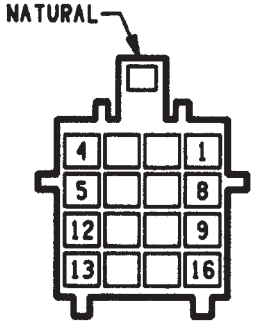

	CAV	CIRCUIT	
	1	C20 18BR/RD	
	2	C91 18LB	
	3	A14 16RD/WT	
	4	C13 18DB/OR	
	5	T41 18BR/YL	
	6	G20 18VT/YL	
	7	G50 18WT/YL	
	8	G3 20BK/PK	
	9	V40 18WT/PK	
	10	K51 18DB/YL	
	11	K54 20OR/BK	
	12	G21 20GY/LB	
*	13	D20 20LG	
*	14	D21 20PK	
	15	G7 18WT/OR	
	16	—	4.0L
	16	K7 18OR	2.5L

C108

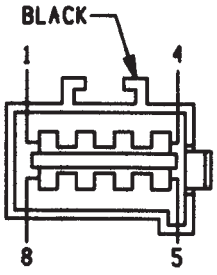

DATA LINK CONNECTOR

	CAV	CIRCUIT	FUNCTION
*	1	D21 20PK	SCI TRANSMIT
*	2	D11 18WT/VT	CCD BUS (+)
	3	—	—
	4	Z12 18BK/TN	GROUND (4.0L ENGINE)
	4	Z1 18BK	GROUND (2.5L ENGINE)
*	5	D12 18OR	CCD BUS (−)
	6	M1 18PK	FUSED B(+)
	7	—	—
*	8	D20 20LG	SCI RECEIVE

C109

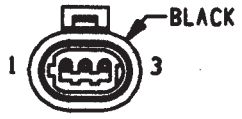

ABS ACCELERATOR SENSOR

CAV	CIRCUIT	FUNCTION
1	B22 18VT/PK	G SWITCH #2 SENSE
2	B21 18YL/VT	G SWITCH #1 SENSE
3	B23 18PK/BR	G SWITCH SENSOR GROUND

* — INDICATES TWISTED PAIRS (D11 & D12, D20 & D21)

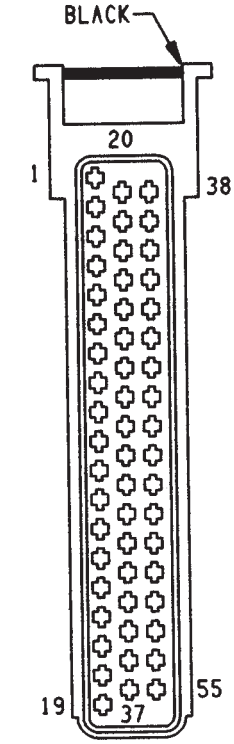

ANTI-LOCK
BRAKE SYSTEM
(ABS) CONTROL MODULE

C110

	CAV	CIRCUIT	FUNCTION
	1	Z1 14BK	GROUND
	2	B243 16DG/BK	LEFT FRONT DUMP VALVE CONTROL
	3	B15 14GY/YL	ABS POWER RELAY OUTPUT
	4	—	—
	5	—	—
	6	—	—
	7	—	—
	8	—	—
	9	—	—
	10	—	—
	11	—	—
	12	—	—
	13	—	—
	14	—	—
	15	B116 18GY	PUMP/MOTOR RELAY CONTROL
	16	B210 18RD/BK	PEDAL TRAVEL SENSOR JUMPER
	17	—	—
	18	—	—
	19	Z1 14BK	GROUND
	20	B245 16WT/LG	LEFT FRONT ISOLATION VALVE CONTROL
	21	B248 16DG/WT	RIGHT FRONT DUMP VALVE CCONTROL
	22	—	—
*	23	D11 18WT/VT	CCD BUS (+)
	24	—	—
	25	B21 18YL/VT	G SWITCH #1 SENSE
	26	B23 18PK/BR	G SWITCH SENSE GROUND
*	27	B1 18YL/DB	RIGHT REAR WHEEL SPEED SENSOR (—)
*	28	B3 18LG/DB	LEFT REAR WHEEL SPEED SENSOR (—)
*	29	B6 18WT/DB	RIGHT FRONT WHEEL SPEED SENSOR (—)
*	30	B8 18RD/DB	LEFT FRONT WHEEL SPEED SENSOR (—)
*	31	B16 18BR	PUMP/MOTOR SPEED SENSOR (—)
	32	L50 18WT/TN	BRAKE LAMP SWITCH OUTPUT
	33	B15 14GY/YL	ABS POWER RELAY OUTPUT
	34	B20 18PK	ABS POWER RELAY CONTROL
	35	—	—
	36	B254 16DG/OR	REAR DUMP VALVE CONTROL
	37	—	—
	38	B249 16WT/YL	RIGHT FRONT ISOLATION VALVE CONTROL
	39	—	—
	40	—	—
	41	B210 18RD/BK	PEDAL TRAVEL SENSOR GROUND
*	42	D12 18OR	CCD BUS (—)
	43	B22 18VT/PK	G SWITCH #2 SENSE
	44	—	—
*	45	B2 18YL	RIGHT REAR WHEEL SPEED SENSOR (+)
*	46	B4 18LG	LEFT REAR WHEEL SPEED SENSOR (+)
*	47	B7 18WT	RIGHT FRONT WHEEL SPEED SENSOR (+)
*	48	B9 18RD	LEFT FRONT WHEEL SPEED SENSOR (+)
*	49	B17 18LG/BR	PUMP/MOTOR SPEED SENSOR (+)
	50	—	—
	51	—	—
	52	G19 20LG/OR	ABS WARNING LAMP DRIVER
	53	F15 18YL/DG	FUSED IGNITION SWITCH OUTPUT
	54	B251 16WT/BK	REAR INLET VALVE CONTROL
	55	—	—

* — INDICATES TWISTED PAIRS (B1 & B2, B3 & B4, B6 & B7, B8 & B9, B16 & B17, D11 & D12)

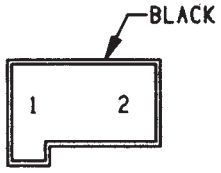

DIODE

C111

CAV	CIRCUIT	FUNCTION
1	B15 18GY/YL	ABS POWER RELAY OUTPUT
2	G19 20LG/OR	ABS WARNING LAMP DRIVER

C112

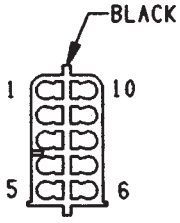

CAV	CIRCUIT
1	C21 18DB/YL
2	G4 18DB
3	G20 18VT/YL
4	A1 12RD
5	X3 18BK/RD
6	G1 18DG/GY
7	L1 18VT
8	G60 18GY/YL
9	A41 18YL
10	C91 18LB

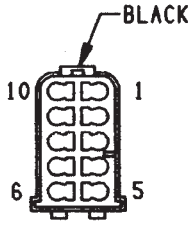

CAV	CIRCUIT
1	C21 18DB/YL
2	G4 20DB
3	G20 18VT/YL
4	A1 12RD
5	X3 18BK/RD
6	G1 18DG/GY
7	L1 18VT/BK
8	G60 18GY/YL
9	A41 18YL
10	C91 18LB

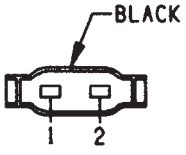

BRAKE
WARNING SWITCH

C113

CAV	CIRCUIT	FUNCTION
1	G9 20GY/BK	BRAKE WARNING LAMP DRIVER
2	G11 20WT/BK	PARK BRAKE SWITCH SENSE

C114

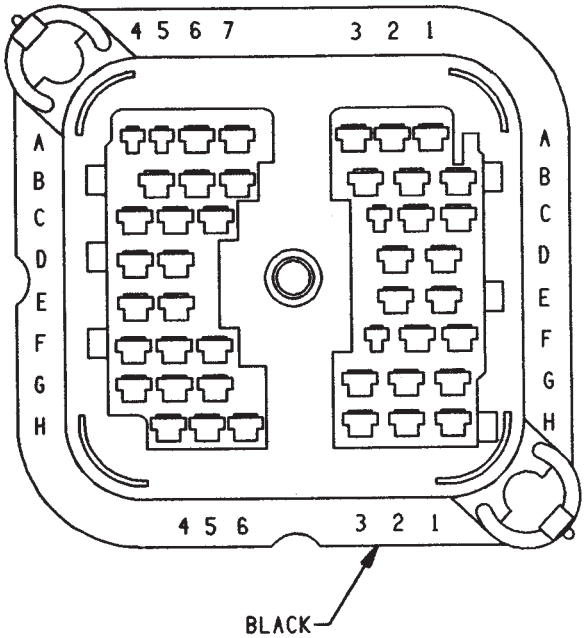

	CAV	CIRCUIT
	A1	L7 18BK/YL
	A2	V20 18BR/WT
	A3	L60 18TN
	A4	G19 20LG/OR
	A5	A22 14BK/OR
(2)	A6	L50 18WT/TN
	A7	G9 20GY/BK
	B1	L20 16LG/WT
	B2	G5 18DB/WT
	B3	—
	B4	G7 20WT/OR
	B4	G7 18WT/OR
	B5	Z1 14BK
	B6	G11 18WT/BK
(2)	C1	G7 18WT/OR
	C2	L61 18LG
	C3	—
	C4	—
	C5	G3 20BK/PK
	C6	G5 18DB/WT
	D1	L39 16LB
	D2	—
	D4	L9 18BK/WT
	D5	G50 18WT/YL
	E1	L3 16RD/OR
(2)	E2	G34 18RD/GY
	E4	A3 12RD/OR
	E5	—
	F1	—
	F2	—
	F3	V10 18BR
	F4	—
	F5	—
	F6	K54 200R/BK
	G1	—
	G2	—
	G3	X2 18DG/RD
	G4	A6 12RD/BK
	G5	—
	G6	X2 18DG/RD
	H1	L4 16VT/WT
	H2	—
	H3	—
	H4	M1 18PK
	H5	V40 18WT/PK
	H6	G21 20GY/LB

(2) INDICATES 2 WIRES IN CAVITY

J958W-5

C114

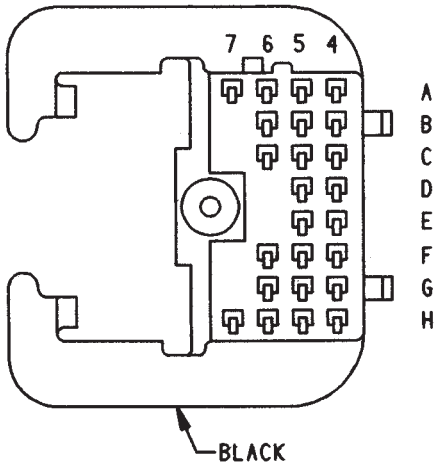

ON DASH HARNESS

CAV	CIRCUIT
A4	G19 20LG/OR
A5	A22 18BK/OR
A6	L50 18WT/TN
A7	G9 20GY/BK
B4	G7 20WT/OR
B5	Z1 14BK
B6	G11 20WT/BK
C4	—
C5	G3 20BK/PK
C6	G5 18DB/WT
C6	G5 18DB/WT
D4	L9 18BK/WT
D5	G50 18WT/YL
E4	A3 12RD/OR
E5	—
F4	—
F5	—
F6	K54 20OR/BK
F6	K54 20OR/BK
G4	A6 12RD/BK
G5	—
G6	X2 18DG/RD
H4	M1 18PK
H5	V40 18WT/PK
H6	G21 20GY/LB

C114

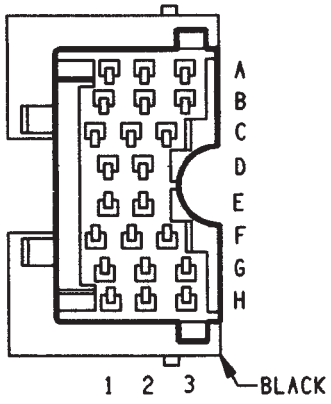

ON HEADLAMP HARNESS

CAV	CIRCUIT
A1	L7 18BK/YL
A2	V20 18BK/WT
A3	L60 18TN
B1	L20 16LG/WT
B2	G5 18DB/WT
B3	—
C1	G7 20WT/OR
C2	L61 18LG
C3	—
D1	L39 16LB
D2	—
E1	L3 16RD/OR
E2	G34 18RD/GY
F1	—
F2	—
F3	V10 18BR
G1	—
G2	—
G3	X2 18DG/RD
H1	L4 16VT/WT
H2	—
H3	—

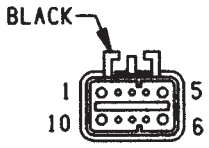

ABS HYDRAULIC ACTUATION UNIT

C115

CAV	CIRCUIT	FUNCTION
1	—	—
2	B245 16WT/LG	LEFT FRONT ISOLATION VALVE CONTROL
3	B249 16WT/YL	RIGHT FRONT ISOLATION VALVE CONTROL
4	B251 16WT/BK	REAR INLET VALVE CONTROL
5	B15 14GY/YL	ABS POWER RELAY OUTPUT
6	—	—
7	B254 16DG/OR	REAR DUMP VALVE CONTROL
8	B248 16DG/WT	RIGHT FRONT DUMP VALVE CONTROL
9	B243 16DG/BK	LEFT FRONT DUMP VALVE CONTROL
10	B15 14GY/YL	ABS POWER RELAY OUTPUT

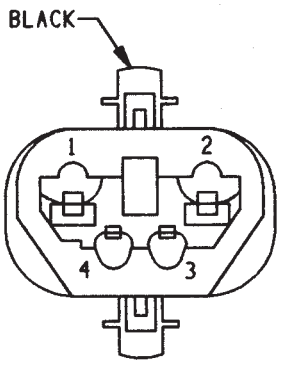

ABS PUMP MOTOR/SENSOR

C116

	CAV	CIRCUIT	FUNCTION
	1	B25 12TN	ABS POWER RELAY OUTPUT
	2	Z12 12BK/TN	GROUND
*	3	B16 18BR	PUMP/MOTOR SPEED SENSOR (−)
*	4	B17 18LG/BR	PUMP/MOTOR SPEED SENSOR (+)

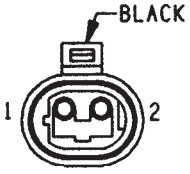

LEFT FRONT WHEEL SPEED SENSOR

C117

	CAV	CIRCUIT	FUNCTION
*	1	B9 18RD	LEFT FRONT WHEEL SPEED SENSOR (+)
*	2	B8 18RD/DB	LEFT FRONT WHEEL SPEED SENSOR (−)

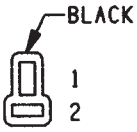

REAR WINDSHIELD WASHER PUMP MOTOR

C118

CAV	CIRCUIT	FUNCTION
1	V20 18BK/WT	REAR WASHER PUMP MOTOR CONTROL
2	Z1 18BK	GROUND

C119

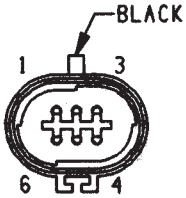

CAV	CIRCUIT
1	G5 18DB/WT
2	C13 18DB/OR
3	—
4	—
5	C20 18BR/RD
6	C21 18DB/YL

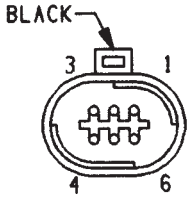

— OPTION — AIR CONDITIONING WIRING IF INSTALLED (2.5L ENGINE)

*—INDICATES TWISTED PAIRS (B8 & B9, B16 & B17)

J958W-5

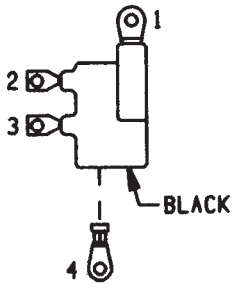

GENERATOR

C120

CAV	CIRCUIT	FUNCTION
1	—	—
2	A142 18DG/OR	AUTOMATIC SHUT DOWN RELAY OUTPUT
3	K20 18DG	GENERATOR FIELD DRIVER
4	Z0 6BK	GROUND

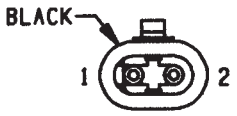

IGNITION COIL

C121

CAV	CIRCUIT	FUNCTION
1	A142 18DG/OR	AUTOMATIC SHUT DOWN RELAY OUTPUT
2	K19 18GY	IGNITION COIL #1 DRIVER

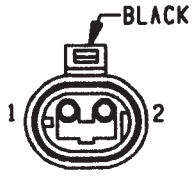

A/C LOW PRESSURE SWITCH

C122

CAV	CIRCUIT	FUNCTION
1	C20 18BR/RD	A/C SWITCH SENSE
2	C21 18DB/YL	A/C SWITCH SENSE

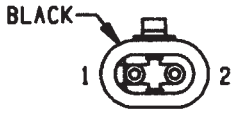

ENGINE OIL PRESSURE SENDING UNIT

C123

CAV	CIRCUIT	FUNCTION
1	—	—
2	G60 18GY/YL	OIL PRESSURE SENSOR SIGNAL

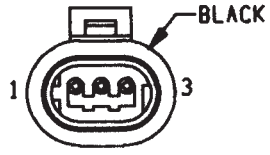

CAMSHAFT POSITION SENSOR

C124

CAV	CIRCUIT	FUNCTION
1	K44 18TN/YL	CAMSHAFT POSITION SENSOR SIGNAL
2	K4 18BK/LB	SENSOR GROUND
3	K7 18OR	8—VOLT SUPPLY

C125

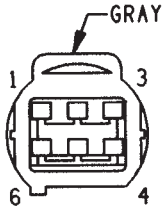

CAV	CIRCUIT
1	Z2 16BK/OR
2	T41 18BR/YL
3	G5 18DB/WT
4	—
5	T22 16DB/TN
6	L1 18VT

WITH AUTOMATIC TRANSMISSION

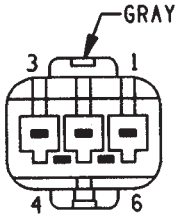

CAV	CIRCUIT
1	—
2	T41 18BR/YL
3	G5 18DB/WT
4	—
5	T22 16DB/TN
6	L1 18VT

WITH MANUAL TRANSMISSION

CAV	CIRCUIT
1	Z2 16BK/OR
2	Z2 16BK/OR
3	G5 18DB/WT
4	—
5	—
6	L1 18VT

C126

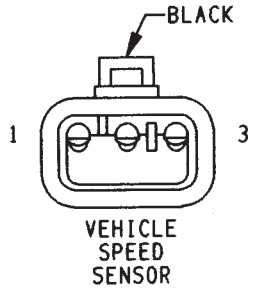

CAV	CIRCUIT	FUNCTION
1	G7 18WT/OR	VEHICLE SPEED SENSOR SIGNAL
2	K4 18BK/LB	SENSOR GROUND
3	K7 18OR	8—VOLT SUPPLY

C127

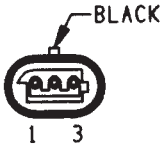

CAV	CIRCUIT
1	Z2 16BK/OR
2	G4 18DB
3	A141 16DG/BK

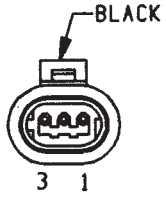

CAV	CIRCUIT
1	Z2 16BK/OR
2	G4 18DB
3	A141 16DG/BK

C128



	CAV	CIRCUIT	FUNCTION
*	1	B4 18LG	LEFT REAR WHEEL SPEED SENSOR (+)
*	2	B3 18LG/DB	LEFT REAR WHEEL SPEED SENSOR (—)

C129



	CAV	CIRCUIT	FUNCTION
*	1	B2 18YL	RIGHT REAR WHEEL SPEED SENSOR (+)
*	2	B1 18YL/DB	RIGHT REAR WHEEL SPEED SENSOR (—)

* - INDICATES TWISTED PAIRS (B1 & B2, B3 & B4)

J958W-5

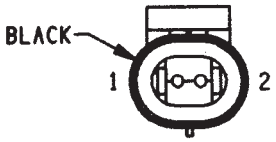

ENGINE COOLANT TEMPERATURE SENSOR

C130

CAV	CIRCUIT	FUNCTION
1	K2 18TN/BK	ENGINE COOLANT TEMP SENSOR SIGNAL
2	K4 18BK/LB	SENSOR GROUND

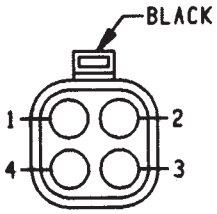

HEATED OXYGEN SENSOR

C131

CAV	CIRCUIT	FUNCTION
1	K4 18BK/LB	SENSOR GROUND
2	K41 18BK/DG	HEATED OXYGEN SENSOR SIGNAL
3	Z1 16BK	GROUND
4	A142 16DG/OR	AUTOMATIC SHUT DOWN RELAY OUTPUT

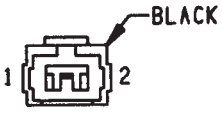

INJECTOR # 1

C132

CAV	CIRCUIT	FUNCTION
1	K11 18WT/DB	INJECTOR # 1 DRIVER
2	A142 18DG/OR	AUTOMATIC SHUT DOWN RELAY OUTPUT

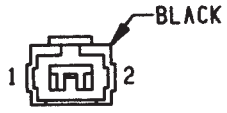

INJECTOR # 2

C133

CAV	CIRCUIT	FUNCTION
1	K12 18TN	INJECTOR # 2 DRIVER
2	A142 18DG/OR	AUTOMATIC SHUT DOWN RELAY OUTPUT

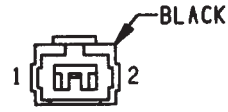

INJECTOR # 3

C134

CAV	CIRCUIT	FUNCTION
1	K13 18YL/WT	INJECTOR # 3 DRIVER
2	A142 18DG/OR	AUTOMATIC SHUT DOWN RELAY OUTPUT

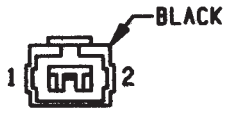

INJECTOR #4

C135

CAV	CIRCUIT	FUNCTION
1	K14 18LB/BR	INJECTOR #4 DRIVER
2	A142 18DG/OR	AUTOMATIC SHUT DOWN RELAY OUTPUT

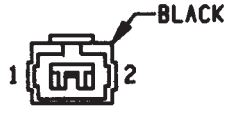

INJECTOR #5

C136

CAV	CIRCUIT	FUNCTION
1	K15 18PK/BK	INJECTOR #5 DRIVER
2	A142 18DG/OR	AUTOMATIC SHUT DOWN RELAY OUTPUT

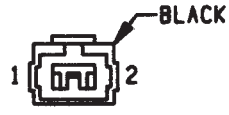

INJECTOR #6

C137

CAV	CIRCUIT	FUNCTION
1	K16 18LG/BK	INJECTOR #6 DRIVER
2	A142 18DG/OR	AUTOMATIC SHUT DOWN RELAY OUTPUT

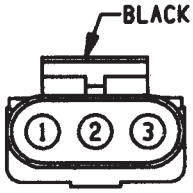

MAP SENSOR

C138

CAV	CIRCUIT	FUNCTION
1	K4 18BK/LB	SENSOR GROUND
2	K1 20DG/RD	MAP SENSOR SIGNAL
3	K6 20VT/WT	5—VOLT SUPPLY

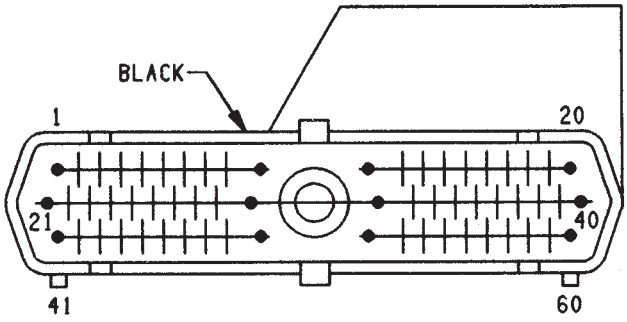

POWERTRAIN
CONTROL
MODULE
(2.5L ENGINE)

C139

CAV	CIRCUIT	FUNCTION
1	K1 20DG/RD	MAP SENSOR SIGNAL
2	K2 18TN/BK	ENGINE COOLANT TEMP SENSOR SIGNAL
3	A14 16RD/WT	FUSED B(+)
4	K4 18BK/LB	SENSOR GROUND
5	Z11 16BK/WT	GROUND
6	K6 20VT/WT	5—VOLT SUPPLY
7	K7 18OR	8—VOLT SUPPLY
8	—	—
9	G50 18WT/YL	FUSED IGNITION SWITCH OUTPUT
10	K10 18DB/OR	POWER STEERING SWITCH SENSE
11	Z1 16BK	GROUND
12	Z1 16BK	GROUND
13	K14 18LB/BR	INJECTOR #4 DRIVER
14	K13 18YL/WT	INJECTOR #3 DRIVER
15	K12 18TN	INJECTOR #2 DRIVER
16	K11 18WT/DB	INJECTOR #1 DRIVER
17	—	—
18	—	—
19	K19 18GY	IGNITION COIL #1 DRIVER
20	K20 18DG	GENERATOR FIELD DRIVER
21	K21 18BK/RD	INTAKE AIR TEMPERATURE SENSOR SIGNAL
22	K22 18OR/DB	THROTTLE POSITION SENSOR SIGNAL
23	—	—
24	K24 18GY/BK	CRANKSHAFT POSITION SENSOR SIGNAL
25	D21 20PK	SCI TRANSMIT
26	—	—
27	C91 18LB	A/C SWITCH SENSE
28	C20 18BR/RD	A/C SWITCH SENSE
29	V40 18WT/PK	STOP LAMP SWITCH SENSE
30	T41 18BR/YL	PARK/NEUTRAL POSITION SWITCH SENSE
31	—	—
32	G3 20BK/PK	MALFUNCTION INDICATOR LAMP DRIVER
33	—	—
34	C13 18DB/OR	A/C COMPRESSOR CLUTCH RELAY CONTROL
35	—	—
36	—	—
37	—	—
38	—	—
39	K39 18GY/RD	IDLE AIR CONTROL MOTOR #1 DRIVER
40	K40 18BR/WT	IDLE AIR CONTROL MOTOR #3 DRIVER
41	K41 18BK/DG	HEATED OXYGEN SENSOR SIGNAL
42	—	—
43	G21 20GY/LB	TACHOMETER SIGNAL
44	K44 18TN/YL	CAMSHAFT POSITION SENSOR SIGNAL
45	D20 20LG	SCI RECEIVE
46	—	—
47	G7 18WT/OR	VEHICLE SPEED SENSOR SIGNAL
48	—	—
49	—	—
50	—	—
51	K51 18DB/YL	AUTOMATIC SHUT DOWN RELAY CONTROL
52	—	—
53	—	—
54	K54 20OR/BK	UPSHIFT LAMP DRIVER
55	—	—
56	—	—
57	A142 18DG/OR	AUTOMATIC SHUT DOWN RELAY OUTPUT
58	—	—
59	K59 18VT/BK	IDLE AIR CONTROL MOTOR #4 DRIVER
60	K60 18YL/BK	IDLE AIR CONTROL MOTOR #2 DRIVER

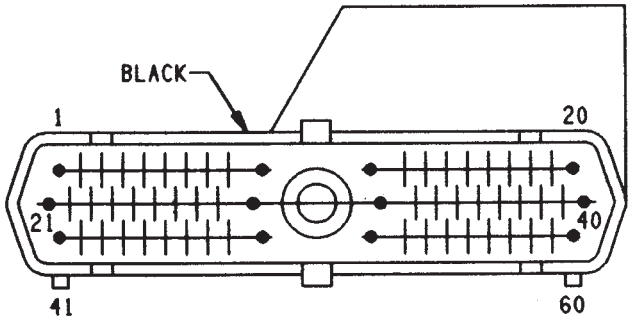

POWERTRAIN
CONTROL
MODULE
(4.0L ENGINE)

C139

CAV	CIRCUIT	FUNCTION
1	K1 20DG/RD	MAP SENSOR SIGNAL
2	K2 18TN/BK	ENGINE COOLANT TEMP SENSOR SIGNAL
3	A14 16RD/WT	FUSED B(+)
4	K4 18BK/LB	SENSOR GROUND
5	Z11 16BK/WT	GROUND
6	K6 20VT/WT	5—VOLT SUPPLY
7	K7 18OR	8—VOLT SUPPLY
8	—	—
9	G50 18WT/YL	FUSED IGNITION SWITCH OUTPUT
10	—	—
11	Z1 16BK	GROUND
12	Z1 16BK	GROUND
13	K14 18LB/BR	INJECTOR #4 DRIVER
14	K13 18YL/WT	INJECTOR #3 DRIVER
15	K12 18TN	INJECTOR #2 DRIVER
16	K11 18WT/DB	INJECTOR #1 DRIVER
17	—	—
18	—	—
19	K19 18GY	IGNITION COIL #1 DRIVER
20	K20 18DG	GENERATOR FIELD DRIVER
21	K21 18BK/RD	INTAKE AIR TEMPERATURE SENSOR SIGNAL
22	K22 18OR/DB	THROTTLE POSITION SENSOR SIGNAL
23	—	—
24	K24 18GY/BK	CRANKSHAFT POSITION SENSOR SIGNAL
25	D21 20PK	SCI TRANSMIT
26	—	—
27	C91 18LB	A/C SWITCH SENSE
28	C20 18BR/RD	A/C SWITCH SENSE
29	V40 18WT/PK	STOP LAMP SWITCH SENSE
30	T41 18BR/YL	PARK/NEUTRAL POSITION SWITCH SENSE
31	—	—
32	G3 20BK/PK	MALFUNCTION INDICATOR LAMP DRIVER
33	—	—
34	C13 18DB/OR	A/C COMPRESSOR CLUTCH RELAY CONTROL
35	—	—
36	—	—
37	—	—
38	K15 18PK/BK	INJECTOR #5 DRIVER
39	K39 18GY/RD	IDLE AIR CONTROL MOTOR #1 DRIVER
40	K40 18BR/WT	IDLE AIR CONTROL MOTOR #3 DRIVER
41	K41 18BK/DG	HEATED OXYGEN SENSOR SIGNAL
42	—	—
43	G21 20GY/LB	TACHOMETER SIGNAL
44	K44 18TN/YL	CAMSHAFT POSITION SENSOR SIGNAL
45	D20 20LG	SCI RECEIVE
46	—	—
47	G7 18WT/OR	VEHICLE SPEED SENSOR SIGNAL
48	—	—
49	—	—
50	—	—
51	K51 18DB/YL	AUTOMATIC SHUT DOWN RELAY CONTROL
52	—	—
53	—	—
54	K54 20OR/BK	UPSHIFT LAMP DRIVER
55	—	—
56	—	—
57	A142 18DG/OR	AUTOMATIC SHUT DOWN RELAY OUTPUT
58	K16 18LG/BK	INJECTOR #6 DRIVER
59	K59 18VT/BK	IDLE AIR CONTROL MOTOR #4 DRIVER
60	K60 18YL/BK	IDLE AIR CONTROL MOTOR #2 DRIVER

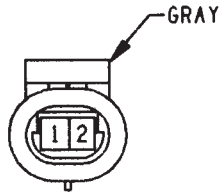

INTAKE AIR TEMPERATURE SENSOR

C140

CAV	CIRCUIT	FUNCTION
1	K21 18BK/RD	INTAKE AIR TEMPERATURE SENSOR SIGNAL
2	K4 18BK/LB	SENSOR GROUND

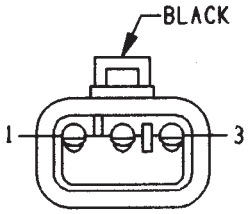

THROTTLE POSITION SENSOR

C141

CAV	CIRCUIT	FUNCTION
1	K4 18BK/LB	SENSOR GROUND
2	K22 18OR/DB	THROTTLE POSITION SENSOR SIGNAL
3	K6 20VT/WT	5—VOLT SUPPLY

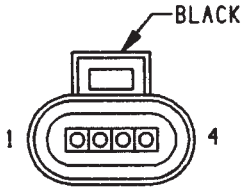

IDLE AIR CONTROL MOTOR

C142

CAV	CIRCUIT	FUNCTION
1	K39 18GY/RD	IDLE AIR CONTROL MOTOR DRIVER #1
2	K60 18YL/BK	IDLE AIR CONTROL MOTOR DRIVER #2
3	K40 18BR/WT	IDLE AIR CONTROL MOTOR DRIVER #3
4	K59 18VT/BK	IDLE AIR CONTROL MOTOR DRIVER #4

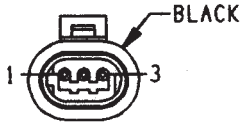

CRANKSHAFT POSITION SENSOR

C143

CAV	CIRCUIT	FUNCTION
1	K24 18GY/BK	CRANKSHAFT POSITION SENSOR SIGNAL
2	K4 18BK/LB	SENSOR GROUND
3	K7 18OR	8—VOLT SUPPLY

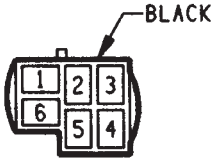

ENGINE DATA LINK CONNECTOR

C144

	CAV	CIRCUIT	FUNCTION
	1	—	—
	2	D20 20LG	SCI RECEIVE
*	2	D20 20LG	SCI RECEIVE
	3	—	—
	4	G50 18WT/YL	FUSED IGNITION SWITCH OUPUT
	4	G50 18WT/YL	FUSED IGNITION SWITCH OUPUT
	5	D21 20PK	SCI TRANSMIT
*	5	D21 20PK	SCI TRANSMIT
	6	Z11 16BK/WT	GROUND

* -INDICATES TWISTED PAIR

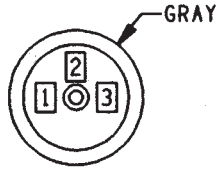

POWER STEERING SWITCH

C145

CAV	CIRCUIT	FUNCTION
1	Z1 16BK	GROUND
2	—	—
3	K10 18DB/OR	POWER STEERING SWITCH SENSE

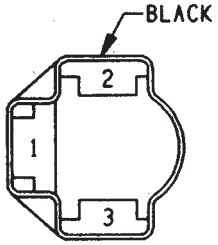

RIGHT HEADLAMP

C146

CAV	CIRCUIT	FUNCTION
1	L4 16VT/WT	DIMMER SWITCH LOW BEAM OUTPUT
2	Z1 16BK	GROUND
3	L3 16RD/OR	DIMMER SWITCH HIGH BEAM OUTPUT

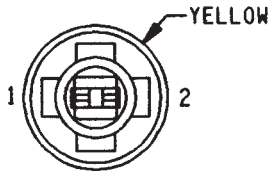

RIGHT SIDE MARKER LAMP

C147

CAV	CIRCUIT	FUNCTION
1	L60 18TN	RIGHT TURN SIGNAL
2	L7 18BK/YL	PARK LAMP SWITCH OUTPUT

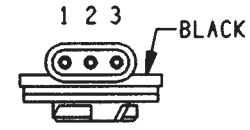

RIGHT PARK AND TURN SIGNAL LAMP

C148

CAV	CIRCUIT	FUNCTION
1	Z1 18BK	GROUND
2	L7 18BK/YL	PARK LAMP SWITCH OUTPUT
3	L60 18TN	RIGHT TURN SIGNAL

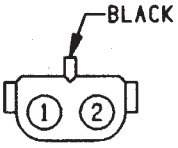

RIGHT FOG LAMP

C149

CAV	CIRCUIT	FUNCTION
1	L39 16LB	FOG LAMP SWITCH OUTPUT
2	Z1 16BK	GROUND

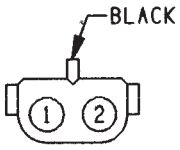

LEFT
FOG LAMP

C150

CAV	CIRCUIT	FUNCTION
1	L39 16LB	FOG LAMP SWITCH OUTPUT
2	Z1 16BK	GROUND

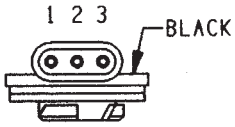

LEFT PARK AND
TURN SIGNAL LAMP

C151

CAV	CIRCUIT	FUNCTION
1	Z1 18BK	GROUND
2	L7 18BK/YL	PARK LAMP SWITCH OUTPUT
3	L61 18LG	LEFT TURN SIGNAL

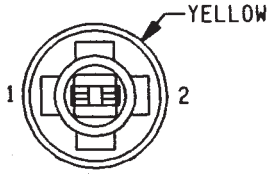

LEFT SIDE
MARKER LAMP

C152

CAV	CIRCUIT	FUNCTION
1	L61 18LG	LEFT TURN SIGNAL
2	L7 18BK/YL	PARK LAMP SWITCH OUTPUT

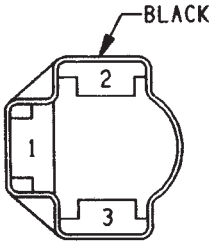

LEFT
HEADLAMP

C153

CAV	CIRCUIT	FUNCTION
1	L4 16VT/WT	DIMMER SWITCH LOW BEAM OUTPUT
2	Z1 16BK	GROUND
3	L3 16RD/OR	DIMMER SWITCH HIGH BEAM OUTPUT

WITH DAYTIME RUNNING LAMP

CAV	CIRCUIT	FUNCTION
1	L4 16VT/WT	DIMMER SWITCH LOW BEAM OUTPUT
1	L4 16VT/WT	DIMMER SWITCH LOW BEAM OUTPUT
2	Z1 16BK	GROUND
3	L3 16RD/OR	DIMMER SWITCH HIGH BEAM OUTPUT
3	L3 16RD/OR	DIMMER SWITCH HIGH BEAM OUTPUT

WITHOUT DAYTIME RUNNING LAMP

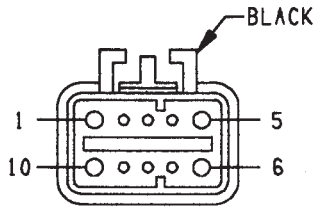

DAYTIME RUNNING LAMP MODULE

C154

CAV	CIRCUIT	FUNCTION
1	G5 18DB/WT	FUSED IGN SWITCH OUTPUT (RUN/START)
2	G34 18RD/GY	HIGH BEAM INDICATOR DRIVER
3	—	—
4	—	—
5	L3 16RD/OR	DIMMER SWITCH HIGH BEAM OUTPUT
6	L20 16LG/WT	FUSED B(+) (TO DIMMER SWITCH)
7	G7 20WT/OR	VEHICLE SPEED SENSOR SIGNAL
8	Z1 18BK	GROUND
9	—	—
10	L4 16VT/WT	LOW BEAM OUTPUT

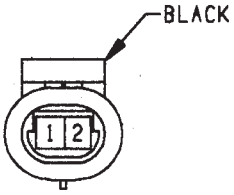

HORN

C155

CAV	CIRCUIT	FUNCTION
1	Z1 16BK	GROUND
2	X2 18DG/RD	HORN RELAY OUTPUT

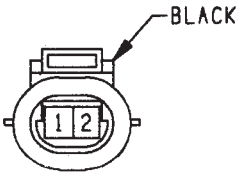

WINDSHIELD WASHER PUMP MOTOR

C156

CAV	CIRCUIT	FUNCTION
1	V10 18BR	WINDSHIELD WASHER SWITCH OUTPUT
2	Z1 18BK	GROUND

C201
FUSE BLOCK
(8W-10-3)

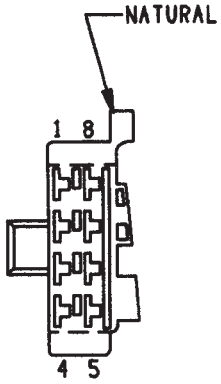

COMBINATION BUZZER

C202

CAV	CIRCUIT	FUNCTION
1	G5 18DB/WT	FUSED IGN SWITCH OUTPUT (RUN/START)
2	G13 20DB/RD	SEAT BELT LAMP DRIVER
3	Z1 20BK	GROUND
4	G10 18LG/RD	SEAT BELT SWITCH SENSE
5	—	—
6	F32 18PK/DB	FUSED B(+)
7	G26 18LB	KEY IN IGNITION SWITCH SENSE
8	—	— —

C203

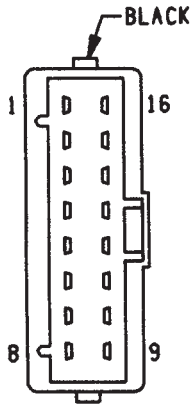

CAV	CIRCUIT
1	G5 18DB/WT
2	M2 18YL
3	M1 20PK
4	G16 18BK/LB
5	L7 18BK/YL
6	L62 18BR/RD
7	L1 18VT/BK
8	L50 18WT/TN
9	G11 18WT/BK
10	—
11	Z1 14BK
12	G10 18LG/RD
13	—
14	—
15	—
16	L63 18DG/RD

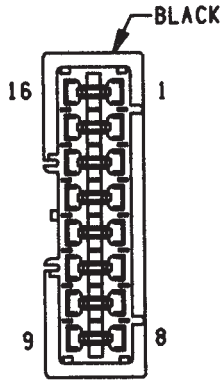

CAV	CIRCUIT
1	G5 18DB/WT
2	M2 18YL
3	M1 20PK
4	G16 18BK/RD
5	L7 18BK/YL
6	L62 18BR/RD
7	L1 18VT/BK
8	L50 18WT/TN
9	G11 18WT/BK
10	—
11	Z1 14BK
11	Z1 18BK
12	G10 18LG/RD
13	—
14	—
15	—
16	L63 18DG/RD

SOFT TOP ONLY

C204

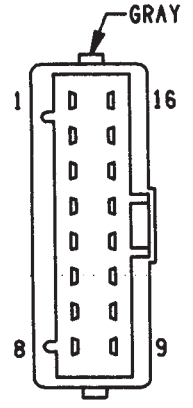

CAV	CIRCUIT
1	C15 18BK/WT
2	—
3	C16 18LB/YL
4	—
5	F81 14BR
6	—
7	V22 16BR/YL
8	—
9	—
10	—
11	—
12	—
13	—
14	V23 16BR/PK
15	—
16	V13 16BR/LG

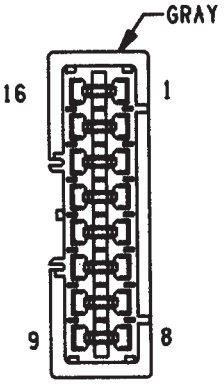

CAV	CIRCUIT
1	C15 18BK/WT
2	—
3	C16 16LB/YL
4	—
5	F81 14BR
6	—
7	V22 16BR/YL
8	—
9	—
10	—
11	—
12	—
13	—
14	V23 16BR/PK
15	—
16	V13 16BR/LG

C205

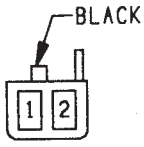

CAV	CIRCUIT
1	M1 18PK
2	M2 18YL

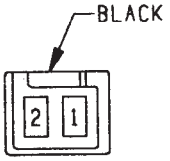

CAV	CIRCUIT
1	M1 18PK
2	M2 18BK/WT

C206

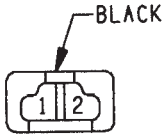

LEFT FRONT I/P SPEAKER

CAV	CIRCUIT	FUNCTION
1	X53 18DG	LEFT FRONT SPEAKER (+)
1	X53 20DG	LEFT FRONT SPEAKER (+)
2	X55 18BR/RD	LEFT FRONT SPEAKER (−)
2	X55 20BR/RD	LEFT FRONT SPEAKER (−)

C207

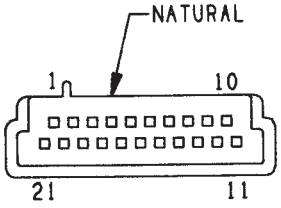

INSTRUMENT CLUSTER

CAV	CIRCUIT	FUNCTION
1	—	—
2	—	—
3	—	—
4	L60 18TN	RIGHT TURN SIGNAL
5	G19 20LG/OR	CHECK ANTI-LOCK LAMP DRIVER
6	K54 20OR/BK	UPSHIFT LAMP DRIVER
7	—	—
8	G5 18DB/WT	FUSED IGN SWITCH OUTPUT (RUN/START)
9	G3 20BK/PK	MALFUNCTION INDICATOR LAMP DRIVER
10	G9 20GY/BK	BRAKE WARNING LAMP DRIVER
11	—	—
12	G21 20GY/LB	TACHOMETER SIGNAL
13	G7 20WT/OR	VEHICLE SPEED SENSOR SIGNAL
14	Z1 18BK	GROUND
15	—	—
16	G13 20DB/RD	SEAT BELT LAMP DRIVER
17	G34 18RD/GY	HIGH BEAM INDICATOR LAMP DRIVER
18	L61 18LG	LEFT TURN SIGNAL
19	G5 18DB/WT	FUSED IGN SWITCH OUTPUT (RUN/START)
20	Z1 18BK	GROUND
21	E2 20OR	PANEL LAMP DRIVER

C208

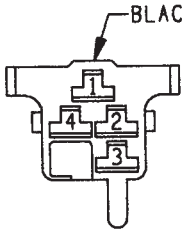

HEADLAMP DIMMER SWITCH

CAV	CIRCUIT	FUNCTION
1	L2 16LG	HEADLAMP SWITCH OUTPUT
2	L3 16RD/OR	DIMMER SWITCH HIGH BEAM OUTPUT
3	L20 16LG/WT	FUSED B(+) (TO DIMMER SWITCH)
3	L20 16LG/WT	FUSED B(+) (TO DIMMER SWITCH)
4	L4 16VT/WT	DIMMER SWITCH LOW BEAM OUTPUT

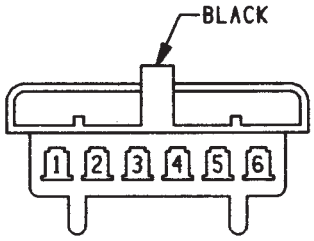

HEADLAMP SWITCH

C209

CAV	CIRCUIT	FUNCTION
1	L7 18BK/YL	PARK LAMP SWITCH OUTPUT
2	L20 16LG/WT	FUSED B(+) (TO DIMMER SWITCH)
3	A3 12RD/OR	FUSED B(+)
4	L2 16LG	HEADLAMP SWITCH OUTPUT
5	F33 18PK/RD	FUSED B(+)
6	—	—

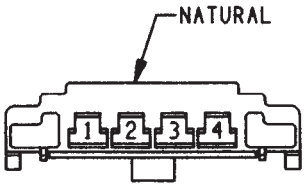

PANEL LAMP DIMMER SWITCH

C210

CAV	CIRCUIT	FUNCTION
1	L7 18BK/YL	PARK LAMP SWITCH OUTPUT
2	Z1 18BK	GROUND
3	M2 18YL	COURTESY LAMP SWITCH OUTPUT
4	E1 20TN	PANEL LAMP DIMMER SWITCH SIGNAL

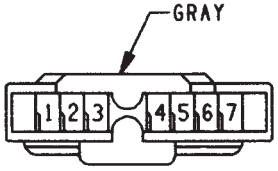

WINDSHIELD WIPER/WASHER SWITCH

C211

CAV	CIRCUIT	FUNCTION
1	—	—
2	V10 18BR	WINDSHIELD WASHER SWITCH OUTPUT
3	V4 18RD/YL	WIPER SWITCH HIGH SPEED OUTPUT
4	V6 18DB	FUSED IGN SWITCH OUTPUT (ACC/RUN)
5	V3 18BR/WT	WIPER SWITCH LOW SPEED OUTPUT
6	V5 18DG/YL	WIPER SWITCH MODE SENSE
7	Z1 18BK	GROUND

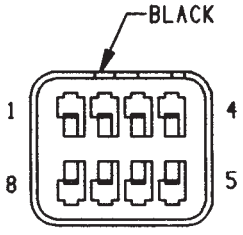

WINDSHIELD WIPER MOTOR

C212

CAV	CIRCUIT	FUNCTION
1	V3 18BR/WT	WIPER SWITCH LOW SPEED OUTPUT
2	V6 18DB	FUSED IGNITION SWITCH OUTPUT
3	—	—
4	V5 18DG/YL	WIPER SWITCH MODE SENSE
5	Z1 18BK	GROUND
6	—	—
7	—	—
8	V4 18RD/YL	WIPER SWITCH HIGH SPEED OUTPUT

C213

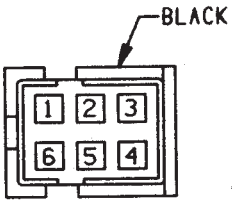

CAV	CIRCUIT
1	C91 18LB
2	F30 16RD
3	C1 14DG
3	C1 18DG
4	Z1 14BK
4	Z1 18BK
5	—
6	C21 18DB/YL

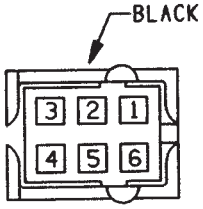

— OPTION —

AIR CONDITIONING WIRING IF INSTALLED (2.5L ENGINE)

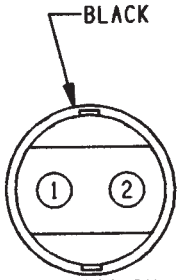

ACCCESSORY ILLUMINATION LAMP

C214

CAV	CIRCUIT	FUNCTION
1	E2 20OR	PANEL LAMP DRIVER
2	Z1 18BK	GROUND

C215

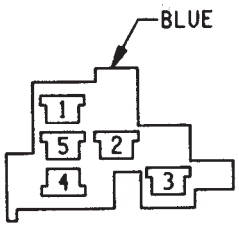

IGNITION SWITCH #2

CAV	CIRCUIT	FUNCTION
1	A41 18YL	IGNITION SWITCH OUTPUT (START)
2	—	—
3	A31 14BK/WT	IGNITION SWITCH OUTPUT (ACC/RUN)
4	A21 14DB	IGNITION SWITCH OUTPUT (RUN/START)
5	—	—

C216

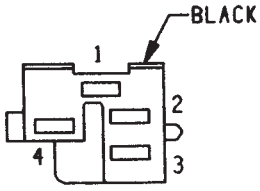

IGNITION SWITCH #1

CAV	CIRCUIT	FUNCTION
1	A22 14BK/OR	IGNITION SWITCH OUTPUT (RUN)
2	G11 18WT/BK	PARK BRAKE SWITCH SENSE
2	G11 18WT/BK	PARK BRAKE SWITCH SENSE
3	—	—
4	A1 12RD	FUSED B(+)

C217

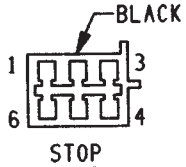

STOP LAMP SWITCH

CAV	CIRCUIT	FUNCTION
1	—	—
2	L50 18WT/TN	BRAKE LAMP SWITCH OUTPUT
2	L50 18WT/TN	BRAKE LAMP SWITCH OUTPUT
3	V40 18WT/PK	BRAKE SWITCH SENSE
4	Z1 18BK	GROUND
5	F32 18PK/DB	FUSED B(+)
6	—	—

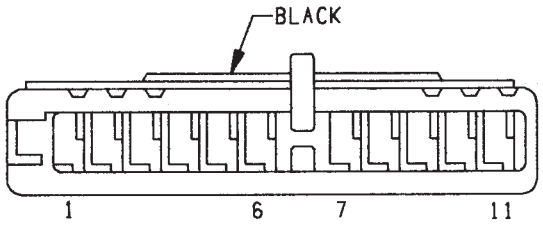

TURN SIGNAL SWITCH AND HAZARD FLASHER SWITCH

C218

CAV	CIRCUIT	FUNCTION
1	L50 18WT/TN	STOP LAMP SWITCH OUTPUT
2	L62 18BR/RD	RIGHT REAR/TURN SIGNAL
3	L63 18DG/RD	LEFT REAR/TURN SIGNAL
4	L6 18RD/WT	TURN SIGNAL FLASHER SIGNAL
5	L19 18PK	HAZARD FLASHER SIGNAL
6	L60 18TN	RIGHT TURN SIGNAL
6	L60 18TN	RIGHT TURN SIGNAL
7	L61 18LG	LEFT TURN SIGNAL
7	L61 18LG	LEFT TURN SIGNAL
8	X3 18BK/RD	HORN RELAY CONTROL
9	G26 18LB	KEY—IN IGNITION SWITCH SENSE
10	G16 18BK/LB	LEFT FRONT DOOR JAMB SWITCH SENSE
11	E2 200R	PANEL LAMP DRIVER

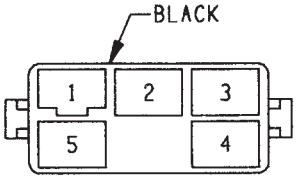

REAR WIPER SWITCH

C219

CAV	CIRCUIT	FUNCTION
1	V20 18BR/WT	REAR WASHER PUMP GROUND
2	V13 16BR/LG	REAR WIPER RUN
3	—	—
4	Z1 18BK	GROUND
5	V22 16BR/YL	WASHER DELAY TO REAR WIPER

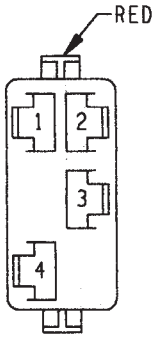

HEATED REAR WINDOW SWITCH

C220

CAV	CIRCUIT	FUNCTION
1	—	—
2	Z1 20BK	GROUND
3	C16 16LB/YL	HEATED REAR WINDOW RELAY CONTROL
4	C15 18BK/WT	HEATED REAR WINDOW RELAY OUTPUT

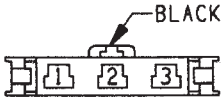

FOG LAMP SWITCH

C221

CAV	CIRCUIT	FUNCTION
1	L39 18LB	FOG LAMP SWITCH OUTPUT
2	L35 18BR/WT	PARK LAMP RELAY CONTROL
3	Z1 20BK	GROUND

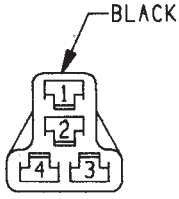

HEATER BLOWER SWITCH

C222

CAV	CIRCUIT	FUNCTION
1	C5 16LG	M1 BLOWER MOTOR DRIVER
2	C4 16TN	LOW BLOWER MOTOR DRIVER
3	C7 14BK/TN	HIGH BLOWER MOTOR DRIVER
3	C7 16BK/TN	HIGH BLOWER MOTOR DRIVER
4	C1 14DG	FUSED IGNITION SWITCH OUTPUT

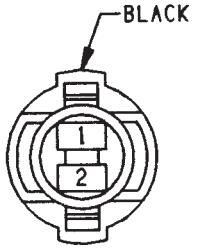

HEATER CONTROL PANEL ILLUMINATION LAMP

C223

CAV	CIRCUIT	FUNCTION
1	E2 200R	PANEL LAMP DRIVER
2	Z1 20BK	GROUND

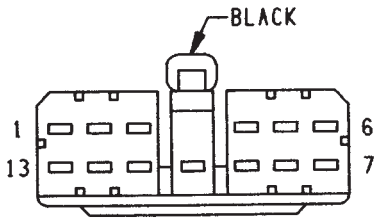

RADIO

C224

CAV	CIRCUIT	FUNCTION
1	X57 18BR/LB	LEFT REAR SPEAKER (–)
2	X55 18BR/RD	LEFT FRONT SPEAKER (–)
3	E22 180R/WT	ILLUMINATION RELAY OUTPUT
4	E2 180R	PANEL LAMP DRIVER
5	X56 18DB/RD	RIGHT FRONT SPEAKER (–)
6	X58 18DB/OR	RIGHT REAR SPEAKER (–)
7	X52 18DB/WT	RIGHT REAR SPEAKER (+)
8	X54 18VT	RIGHT FRONT SPEAKER (+)
9	F30 18RD	FUSED IGN SWITCH OUTPUT (ACC/RUN)
10	M1 18PK	FUSED B(+)
11	–	–
12	X53 18DG	LEFT FRONT SPEAKER (+)
13	X51 18BR/YL	LEFT REAR SPEAKER (+)

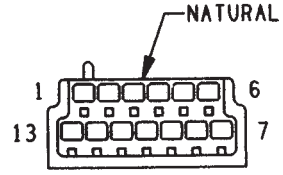

GAUGE PACKAGE

C225

CAV	CIRCUIT	FUNCTION
1	E2 200R	PANEL LAMP DRIVER
2	G60 18GY/YL	OIL PRESSURE SENSOR SIGNAL
3	–	–
4	G20 18VT/YL	ECT GAUGE SENSOR SIGNAL
5	G5 18DB/WT	FUSED IGN SWITCH OUTPUT (RUN/START)
6	Z1 18BK	GROUND
7	E2 200R	PANEL LAMP DRIVER
8	G4 20DB	FUEL LEVEL SENSOR SIGNAL
9	G1 18DG/GY	4WD SENSE
10	–	–
11	–	–
12	G5 18DB/WT	FUSED IGN SWITCH OUTPUT (RUN/START)
13	Z1 18BK	GROUND

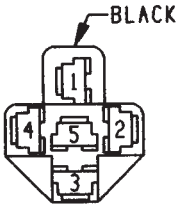

RADIO ILLUMINATION RELAY

C226

CAV	CIRCUIT	FUNCTION
1	E22 180R/WT	ILLUMINATION OUTPUT TO RADIO
2	Z1 18BK	GROUND
3	E2 200R	PANEL LAMP DRIVER
4	L7 18BK/YL	PARK LAMP SWITCH OUTPUT
5	F30 18RD	FUSED IGN SWITCH OUTPUT (ACC/RUN)

C227

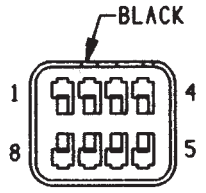

CAV	CIRCUIT
1	X56 20DB/RD
2	X54 20VT
3	X53 20DG
4	X55 20BR/RD
5	X58 18DB/OR
6	X52 18DB/WT
7	X51 18BR/YL
8	X57 18BR/LB

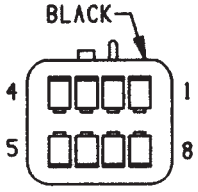

WITHOUT HALO SPEAKERS

CAV	CIRCUIT
1	X58 20WT/LG
2	X52 20LG/WT
3	X51 20BR/WT
4	X57 20BR
5	X58 20WT/LG
6	X52 20LG/WT
7	X51 20BR/WT
8	X57 20BR

WITH HALO SPEAKERS

CAV	CIRCUIT
1	—
2	—
3	—
4	—
5	X58 20DB/OR
6	X52 20DB/WT
7	X51 20BR/YL
8	X57 20BR/LB

C228

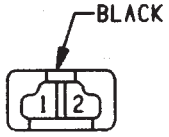

RIGHT FRONT I/P SPEAKER

CAV	CIRCUIT	FUNCTION
1	X54 18VT	RIGHT FRONT SPEAKER (+)
1	X54 20VT	RIGHT FRONT SPEAKER (+)
2	X56 18DB/RD	RIGHT FRONT SPEAKER (−)
2	X56 20DB/RD	RIGHT FRONT SPEAKER (−)

C229

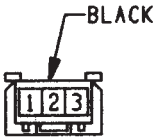

HEATER BLOWER MOTOR

CAV	CIRCUIT	FUNCTION
1	C7 14BK/TN	HIGH BLOWER MOTOR DRIVER
2	—	—
3	Z1 14BK	GROUND

C230

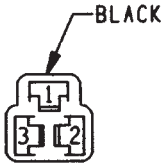

HEATER BLOWER RESISTOR

CAV	CIRCUIT	FUNCTION
1	C5 16LG	M1 BLOWER MOTOR DRIVER
2	C7 16BK/TN	HIGH BLOWER MOTOR DRIVER
3	C4 16TN	LOW BLOWER MOTOR DRIVER

C231

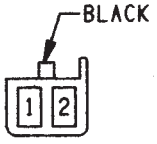

CAV	CIRCUIT
1	M1 18PK
2	M2 18YL

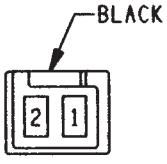

CAV	CIRCUIT
1	M1 18PK
2	M2 18BK/WT

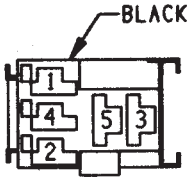

PARK LAMP RELAY

C232

CAV	CIRCUIT	FUNCTION
1	L7 18BK/YL	PARK LAMP SWITCH OUTPUT
2	L35 18BR/WT	PARK LAMP RELAY CONTROL
3	F81 16BR	FUSED B(+)
4	—	—
5	L36 16BR/LB	PARK LAMP RELAY OUTPUT

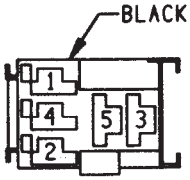

HIGH BEAM RELAY

C233

CAV	CIRCUIT	FUNCTION
1	G34 18RD/GY	HIGH BEAM INDICATOR DRIVER
2	Z1 18BK	GROUND
3	L36 16BR/LB	PARK LAMP RELAY OUTPUT
4	L39 16LB	HIGH BEAM RELAY OUTPUT
5	—	—

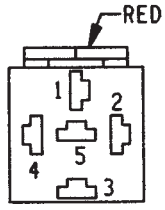

HEATED REAR WINDOW RELAY

C301

CAV	CIRCUIT	FUNCTION
1	C15 18BK/WT	HEATED REAR WINDOW RELAY OUTPUT
1	C15 14BK/WT	HEATED REAR WINDOW RELAY OUTPUT
2	Z1 18BK	GROUND
3	F81 14BR	FUSED B(+)
4	G5 18DB/WT	FUSED IGN SWITCH OUTPUT (RUN/START)
5	C16 18LB/YL	HEATED REAR WINDOW RELAY CONTROL

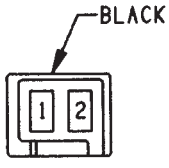

SEAT BELT SWITCH

C302

CAV	CIRCUIT	FUNCTION
1	G10 18LG/RD	SEAT BELT SWITCH SENSE
2	Z1 18BK	GROUND

C303

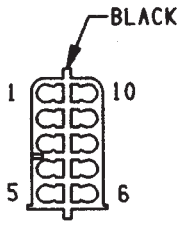

CAV	CIRCUIT
1	C15 14BK/WT
2	M2 18YL
3	M1 20PK
4	V23 16BR/PK
5	V13 16BR/LG
6	—
7	—
8	—
9	V22 16BR/YL
10	Z1 14BK

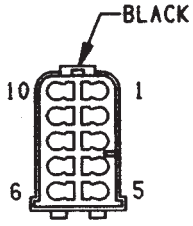

CAV	CIRCUIT
1	C15 14BR/OR
2	M2 18BK/WT
3	M1 18PK
4	V22 14BR/WT
4	V23 14GR
5	V13 14GR/WT
6	—
7	—
8	—
9	V22 14BR/WT
10	Z1 12BK

C304

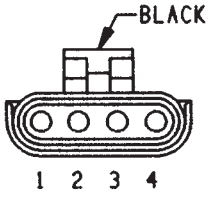

LEFT TAIL, STOP AND TURN SIGNAL LAMP AND LICENSE LAMP

CAV	CIRCUIT	FUNCTION
1	L1 18VT/BK	BACK—UP LAMP SWITCH OUTPUT
2	L63 18DG/RD	LEFT REAR TURN SIGNAL OUTPUT
3	L7 18BK/YL	PARK LAMP SWITCH OUTPUT
4	Z1 14BK	GROUND

C305

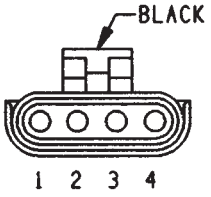

RIGHT TAIL, STOP AND TURN SIGNAL LAMP

CAV	CIRCUIT	FUNCTION
1	L1 18VT/BK	BACK—UP LAMP SWITCH OUTPUT
2	L62 18BR/RD	RIGHT REAR TURN SIGNAL OUTPUT
3	L7 18BK/YL	PARK LAMP SWITCH OUTPUT
4	—	—

C306

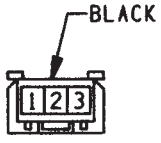

TWO SPEED WINDSHIELD WIPER MOTOR

CAV	CIRCUIT	FUNCTION
1	V23 14GR	IGNITION SWITCH OUTPUT
2	Z1 16BK	GROUND
3	V13 14GR/WT	REAR WIPER SWITCH OUTPUT

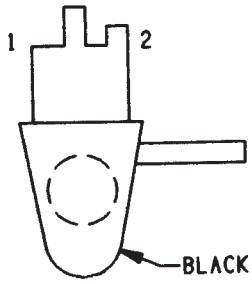

LEFT COURTESY LAMP

C307

CAV	CIRCUIT	FUNCTION
1	M1 18PK	FUSED B(+)
2	M2 18BK/WT	COURTESY LAMP DRIVER

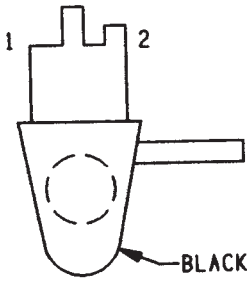

RIGHT COURTESY LAMP

C308

CAV	CIRCUIT	FUNCTION
1	M1 18PK	FUSED B(+)
2	M2 18BK/WT	COURTESY LAMP DRIVER

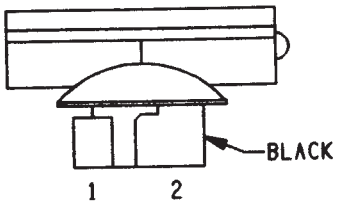

CENTER HIGH MOUNTED STOP LAMP #2

C309

CAV	CIRCUIT	FUNCTION
1	L50 18WT/TN	BRAKE LAMP SWITCH OUTPUT
2	Z1 18BK	GROUND

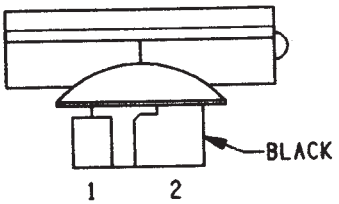

CENTER HIGH MOUNTED STOP LAMP #1

C310

CAV	CIRCUIT	FUNCTION
1	L50 18WT/TN	BRAKE LAMP SWITCH OUTPUT
2	Z1 18BK	GROUND

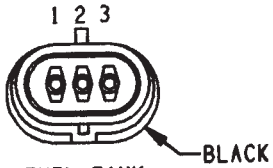

FUEL TANK LEVEL GAUGE SENDING UNIT

C401

CAV	CIRCUIT	FUNCTION
1	Z2 16BK/OR	GROUND
2	G4 18DB	FUEL LEVEL SENSOR SIGNAL
3	A141 16DG/BK	FUEL PUMP RELAY OUTPUT

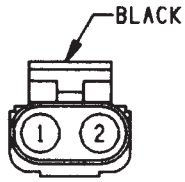

4WD SWITCH

C402

CAV	CIRCUIT	FUNCTION
1	G1 18DG/GY	4WD SENSE
2	Z1 18BK	GROUND

C403

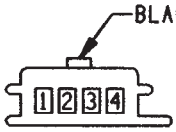

CAV	CIRCUIT
1	X51 20BR/YL
2	X57 20BR/LB
3	X52 20DB/WT
4	X58 20DB/OR

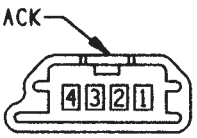

CAV	CIRCUIT
1	X51 20BR/YL
2	X57 20BR/LB
3	X52 20DB/WT
4	X58 20DB/OR

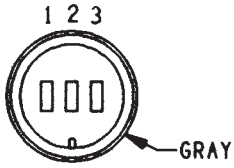

PARK/NEUTRAL POSITION SWITCH

C404

CAV	CIRCUIT	FUNCTION
1	G5 18DB/WT	FUSED IGN SWITCH OUTPUT (RUN/START)
2	T41 18BR/YL	PARK/NEUTRAL POSITION SWITCH SENSE
3	L1 18VT	BACK—UP LAMP SWITCH OUTPUT

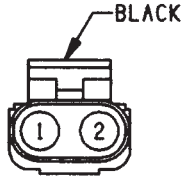

BACK-UP LAMP SWITCH

C405

CAV	CIRCUIT	FUNCTION
1	L1 18VT	BACK—UP LAMP SWITCH OUTPUT
2	G5 18DB/WT	FUSED IGN SWITCH OUTPUT (RUN/START)

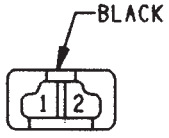

RIGHT HALO SPEAKER

C406

CAV	CIRCUIT	FUNCTION
1	X52 20DB/WT	RIGHT REAR SPEAKER (+)
2	X58 20DB/OR	RIGHT REAR SPEAKER (—)

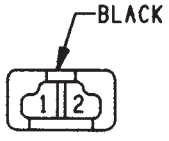

LEFT HALO SPEAKER

C407

CAV	CIRCUIT	FUNCTION
1	X51 20BR/YL	LEFT REAR SPEAKER (+)
2	X57 20BR/LB	LEFT REAR SPEAKER (—)

CONNECTOR LOCATIONS

GENERAL INFORMATION

This section provides illustrations identifying component and connector locations in the vehicle. A connector index is provided. Use the wiring diagrams in each section for connector number identification. Refer to the index for the proper figure number.

CONNECTOR LOCATIONS

Connector #	Color	Location	Fig.
C101	BK	RT Fender Side Shield	1
C102	BK	RT Fender Side Shield Under PDC	1
C103	BK	RT Fender Side Shield	1
C104	BK	LT Side of Battery on Cowl Panel	1
C105 2.5L	NAT	RT Rear of Engine	3
C105 4.0L	NAT	RT Rear of Engine	4
C106	BK	At Lamp	1
C107	NAT	Center of Cowl Panel Near Map Sensor	1
C108	BK	LT Kick Panel Above Park Brake	8
C109	BK	Under Drivers Seat	8
C110	BK	Under I.P.Front of Floor Tunnel	6
C111	BK	Under I.P.Front of Floor Tunnel	6
C112	BK	Under I.P. RT of Stop Lamp Switch	7
C113	BK	LT Fender Side Shield	1
C114	BK	LT Side Cowl Panel	1
C115	BK	LT Fender Side Shield	1
C116	BK	LT Fender Side Shield	1
C117	BK	LT Fender Side Shield	1
C118	BK	Bottom of Washer Reservoir	2
C119	BK	Near Bulkhead Disconnect 2.5L only	Not Shown
C120 2.5L	BK	Rear of Generator	3
C120 4.0L	BK	Rear of Generator	5
C121 2.5L	BK	RT Rear of Engine	3
C121 4.0L	BK	Rear of Generator	4
C122	BK	On Receiver/Drier	4
C123 2.5L	BK	RT Side of Engine Rear of Distributor	3
C123 4.0L	BK	RT Side of Engine Rear of Distributor	4
C124 2.5L	BK	At End of Distributor Pig Tail	3
C124 4.0L	BK	At End of Distributor Pig Tail	4
C125	GY	RT Side of Transmission	5
C126	BK	LT Rear of Transmission	5
C127	BK	Top of Fuel Tank	9
C128	BK	Top of Rear Cross-member	9
C129	BK	Top of Rear Cross-member	9
C130 2.5L	BK	On Thermostat Housing	3
C130 4.0L	BK	On Thermostat Housing	4
C131 2.5L	BK	LT Side of Engine Bottom of Intake	3
C131 4.0L	BK	LT Side of Engine Bottom of Intake	4
C132 2.5L	BK	Injector #1	3
C132 4.0L	BK	Injector #1	4
C133 2.5L	BK	Injector #2	3
C133 4.0L	BK	Injector #2	4
C134 2.5L	BK	Injector #3	3
C134 4.0L	BK	Injector #3	4
C135 2.5L	BK	Injector #4	3
C135 4.0L	BK	Injector #4	4
C136	BK	Injector #5	4
C137	BK	Injector #6	4
C138 2.5L	BK	Center of Dash Panel	1
C138 4.0L	BK	Center of Dash Panel	1
C139	BK	Under Bulkhead LT Side of I.P.	1
C140 2.5L	GY	LT Rear of Intake	3
C140 4.0L	GY	LT Rear of Intake	4
C141 2.5L	BK	Rear of Throttle Body	3
C141 4.0L	BK	Rear of Throttle Body	4
C142 2.5L	BK	On Throttle Body	3
C142 4.0L	BK	On Throttle Body	4
C143 2.5L	BK	Rear of Intake	3
C143 4.0L	BK	Rear of Intake	4
C144	BK	Above Bulkhead Disconnect	1
C145	GY	On Power Steering Pump	3
C146	BK	At Headlamp	Not Shown
C147	YL	At Side Marker Lamp	2
C148	BK	At Park/Turn Lamp	Not Shown
C149	BK	RT Side Behind Bumper	2
C150	BK	LT Side Behind Bumper	2
C151	BK	At Park/Turn Lamp	2
C152	YL	At Side Marker Lamp	Not Shown
C153	BK	At Headlamp	2
C154	BK	LT Fender Side Shield	2
C155	BK	Direct Connection to Horn	2
C156	BK	Bottom of Washer Reservoir	2
C201	BK	LT Side of I.P	7
C202	BK	On Fuse Block	7
C203	BK	LT Kick Panel	7
C204	BK	LT Kick Panel	7
C205	BK	LT Side Kick Panel Under I.P.	7
C206	BK	At Speaker	Not Shown
C207	BK	LT of Steering Column Rear of Cluster	7
C208	BK	LT Side of Steering Column	7
C209	BK	Rear of Switch	7
C210	BK	Rear of Switch	7
C211	BK	Base of Steering Column	7
C212	BK	At Wiper Motor	7
C213	BK	RT of Steering Column Under I.P.	7
C214	BK	RT Side of Cluster Bezel	Not Shown
C215	BK	Base of Steering Column	7
C216	BK	Base of Steering Column	7
C217	BK	RT Side of Brake Pedal Support	7
C218	BK	Base of Steering Column	7
C219	BK	Rear of Switch	7
C220	BK	Rear of Switch	7
C221	BK	Rear of Switch	7

Connector #	Color	Location	Fig.
C222	BK	Rear of Switch	6
C223	BK	Rear of HVAC Switch	6
C224	BK	Rear of Radio	6
C225	BK	Rear Center of I.P	6
C226	BK	Rear of Glove Box LT Side	6
C227	BK	Under I.P Right Side	6
C228	BK	At Speaker	Not Shown
C229	BK	RT Side of HVAC Housing	6
C230	BK	RT Side of HVAC Housing	6
C231	BK	RT Kick Panel	6, 7
C232	BK	Top of I.P. Center Support	7
C233	BK	Top of I.P. Center Support	7
C301	RD	LT Kick Panel	8
C302	BK	At Buckle	8
C303	BK	LT Rear Quarter Panel	8
C304	BK	LT Rear Quarter Panel	8
C305	BK	RT Rear Quarter Panel	8
C306	BK	At Motor	Not Shown
C307	BK	LT Side of I.P. at Lamp	6
C308	BK	RT Side of I.P. at Lamp	7
C309	BK	At CHMSL Lamp	Not Shown
C310	BK	At CHMSL Lamp	Not Shown
C401	BK	Top of Fuel Tank	9
C402	BK	RT Side of Axle	Not Shown
C403	BK	RT Side of Roll Bar	8
C404	GY	LT Side Front of Transmission	5
C405	BK	RT Side of Transmission	5
D101		ABS Diode Under I.P.Front of Floor Tunnel	6
D201		Taped In Harness Near Wiper Switch T/O	6
G101		Left of Battery on Dash Panel	1
G102		Center of Dash Panel	1
G103 2.5L		Rear of Distributor	3
G103 4.0L		Rear of Generator	4
G104 2.5L		RT Side of Engine	3
G104 4.0L		Rt Side of Engine	4
G105		RT Side Radiator Closure Panel	2
G106		LT Side Radiator Closure Panel	2
G107		RT Side of Dash Panel	1
G108 2.5L		RT Rear of Engine	3
G108 4.0L		RT Rear of Engine	4
G201		At Cigar Lighter	6
G202		Rear of Radio	6

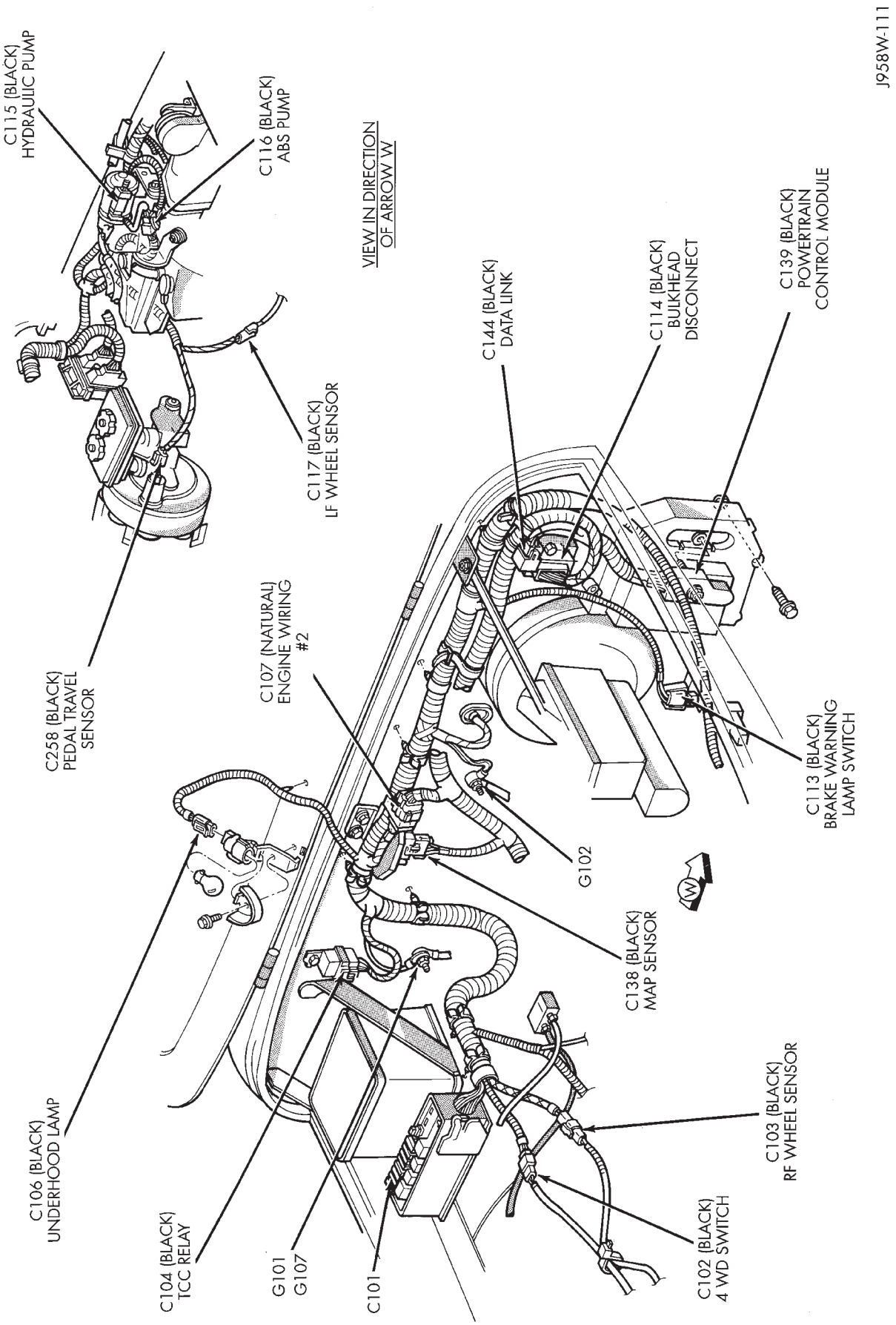

Fig. 1 Engine Compartment Connections YJ

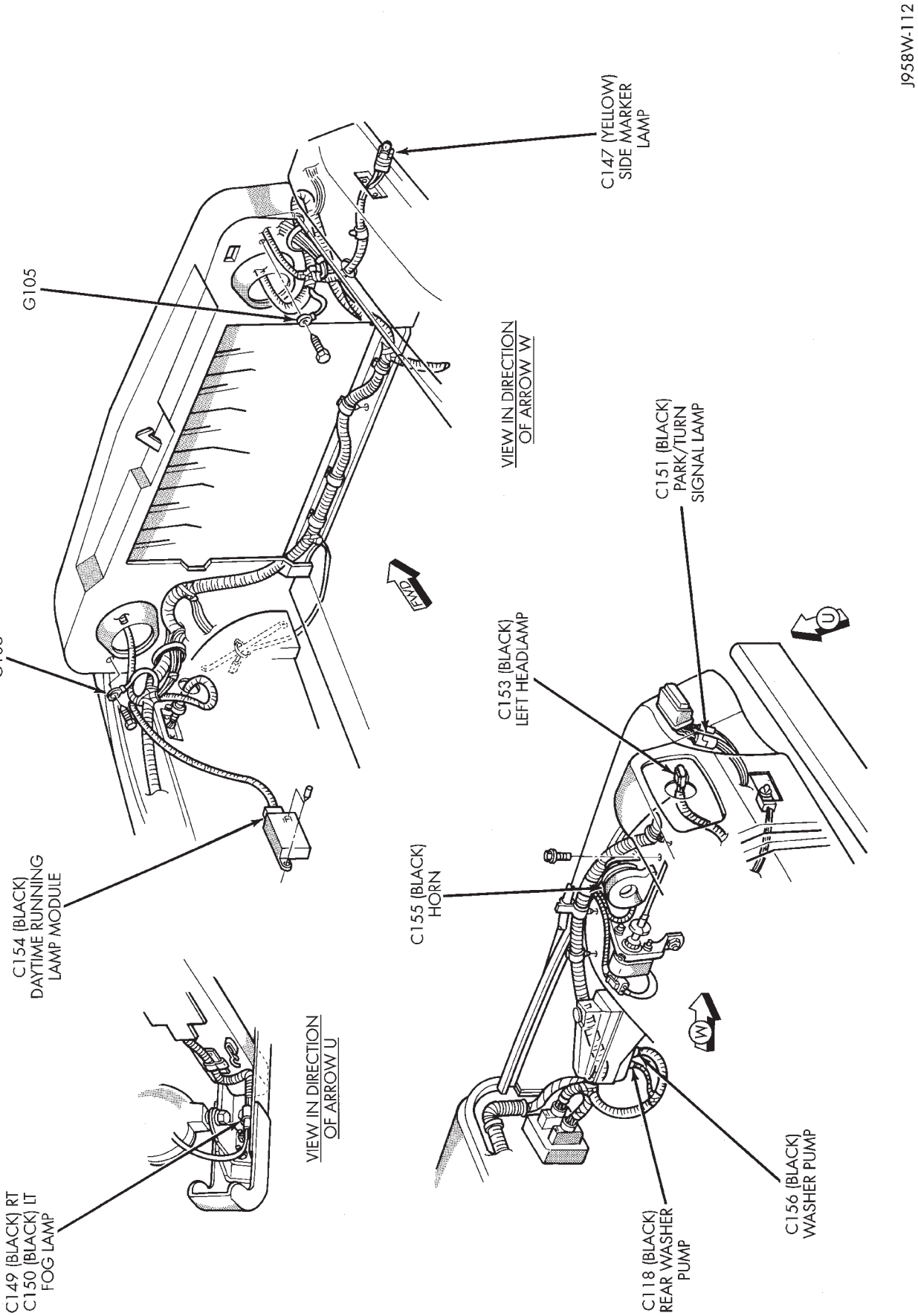

Fig. 2 Engine Compartment Connections YJ

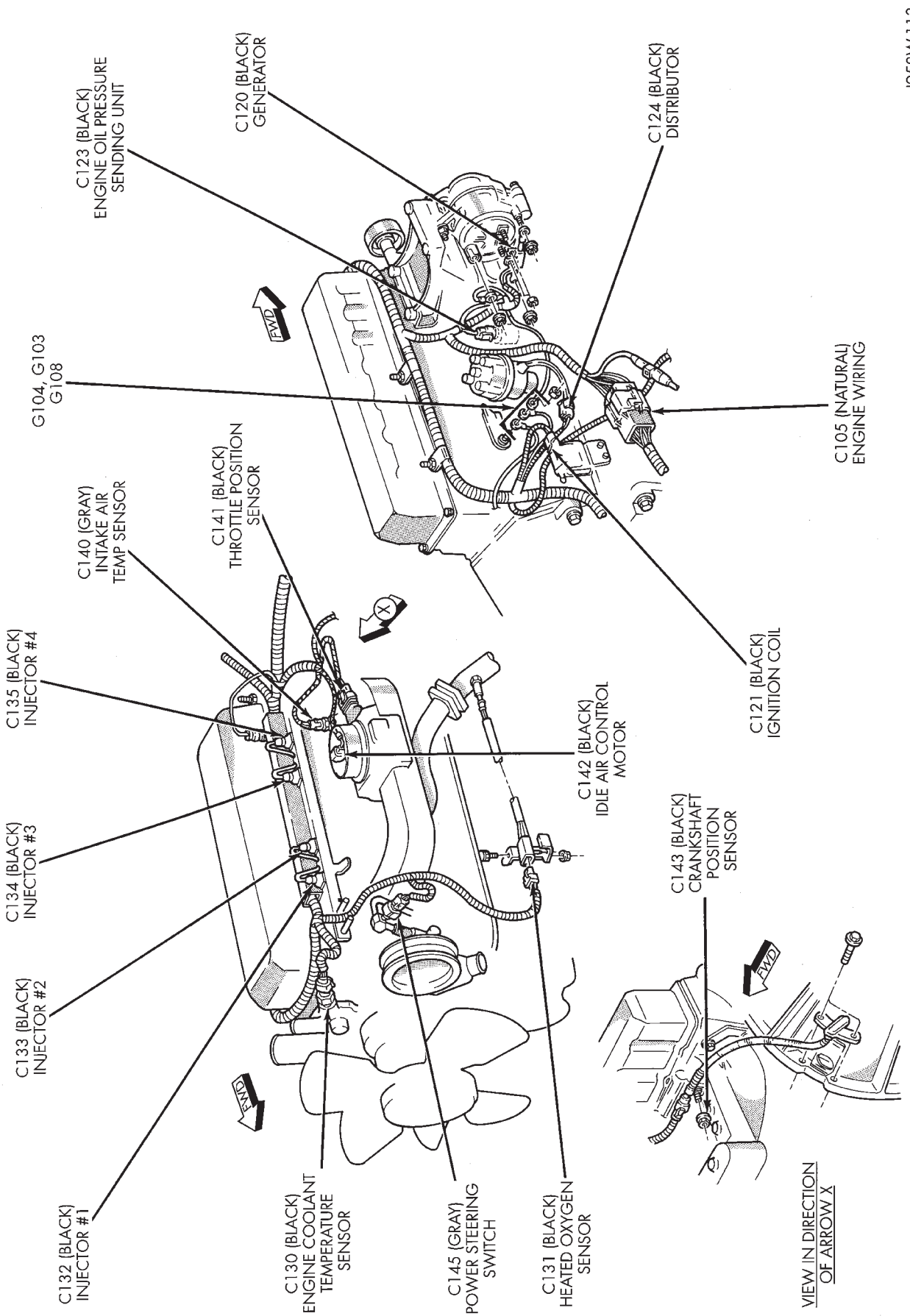

Fig. 3 Engine Connections 2.5L YJ

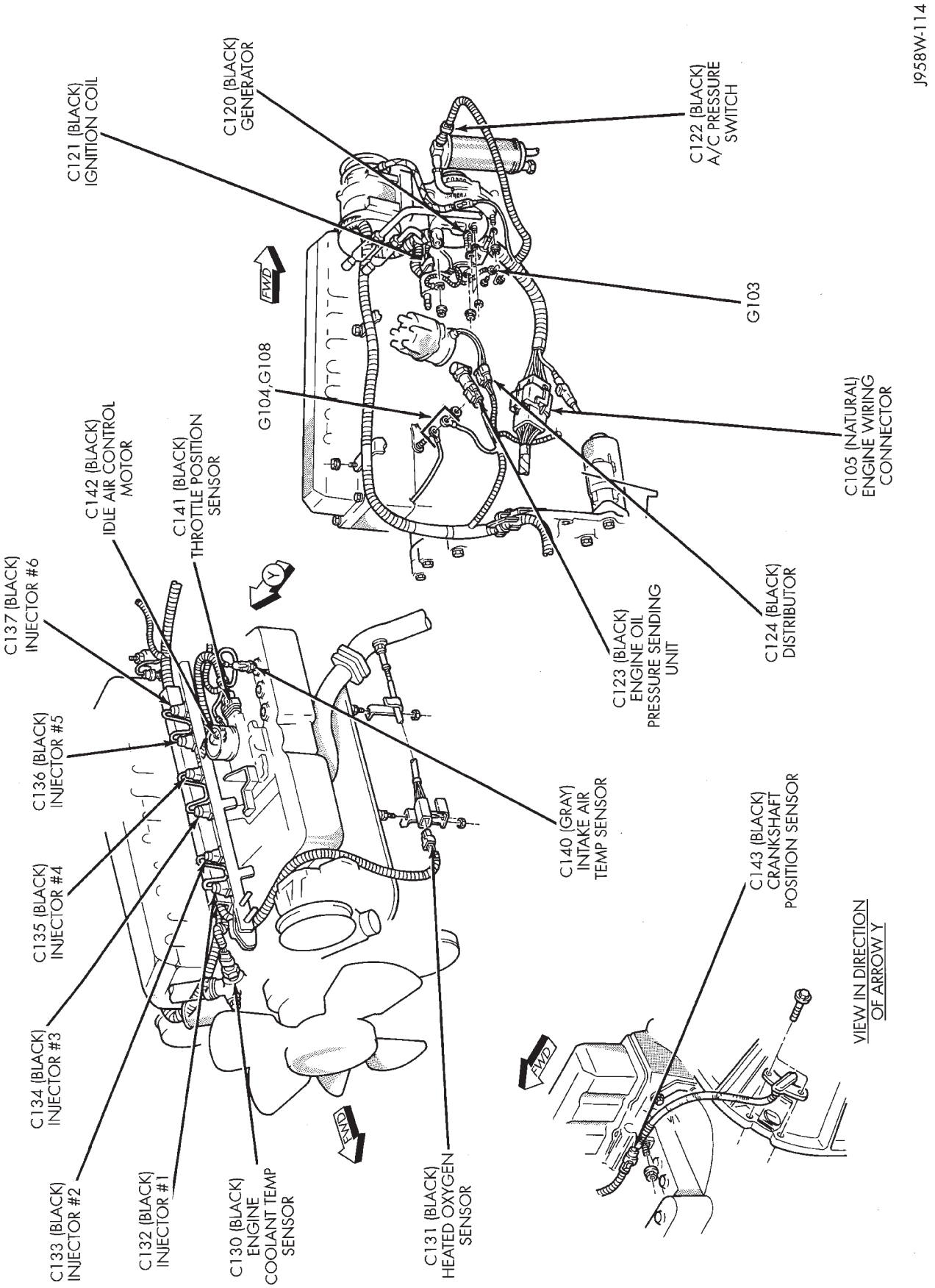

Fig. 4 Engine Connections 4.0L YJ

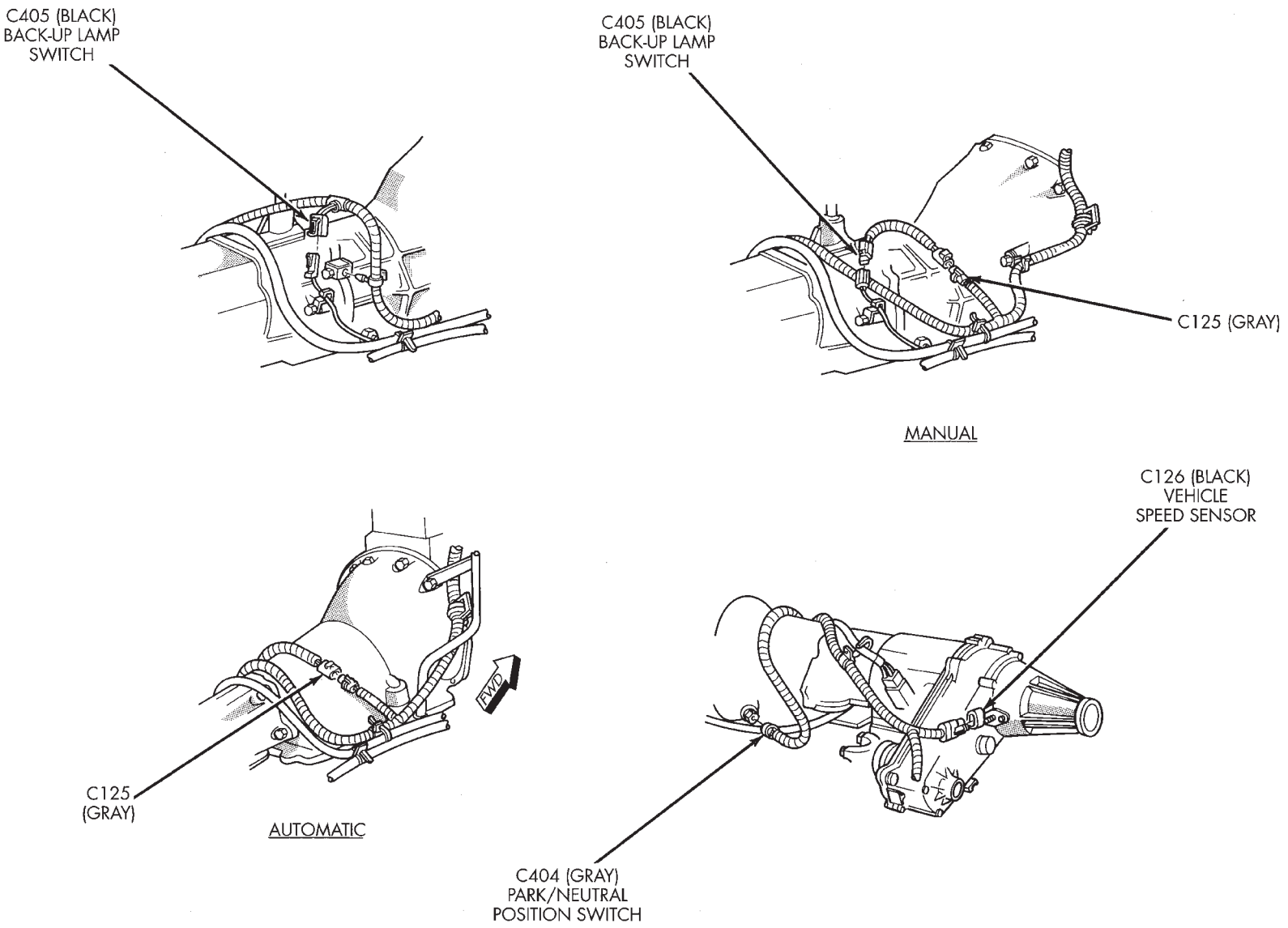

Fig. 5 Transmission Connections YJ

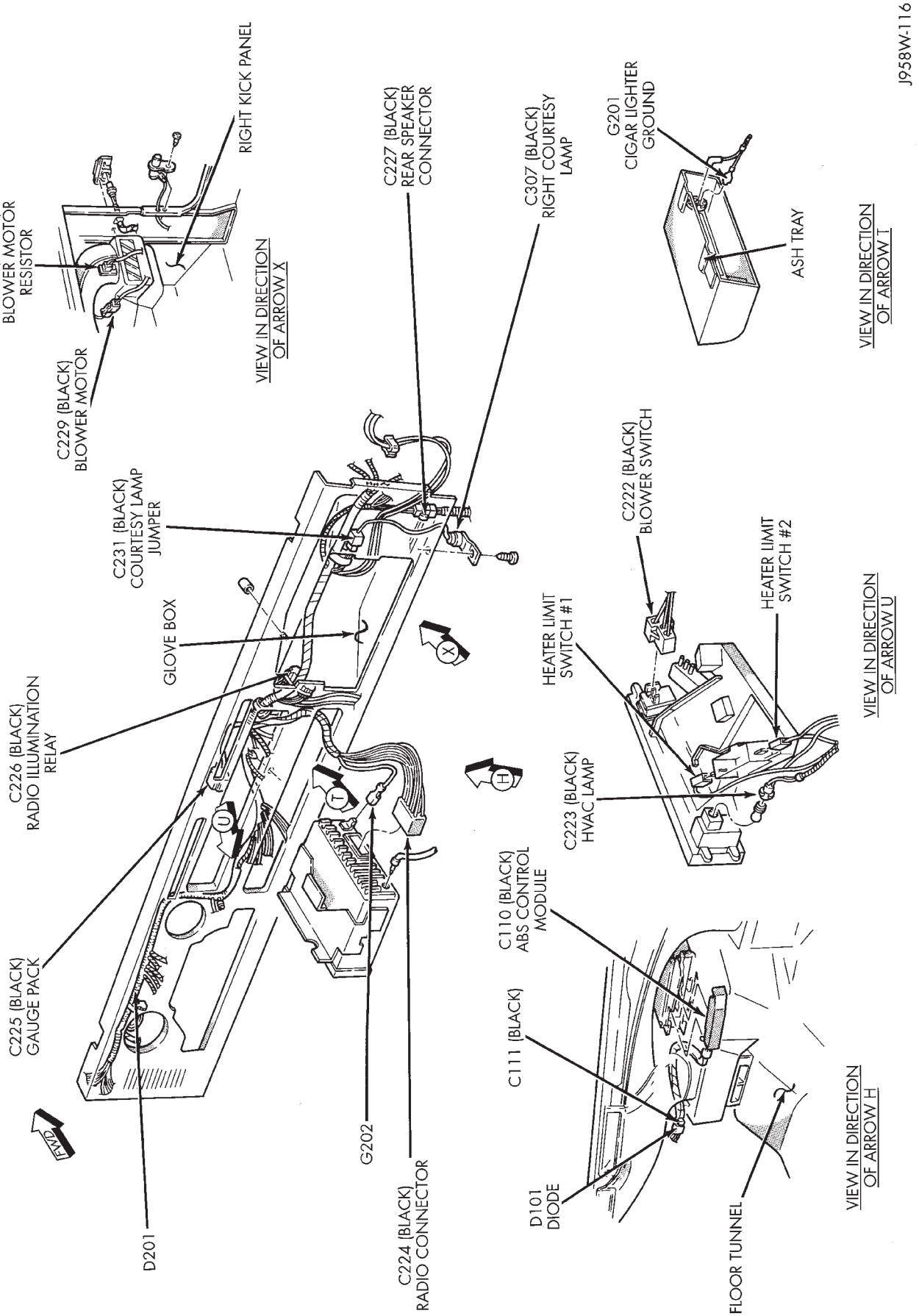

Fig. 6 Instrument Panel Connections YJ

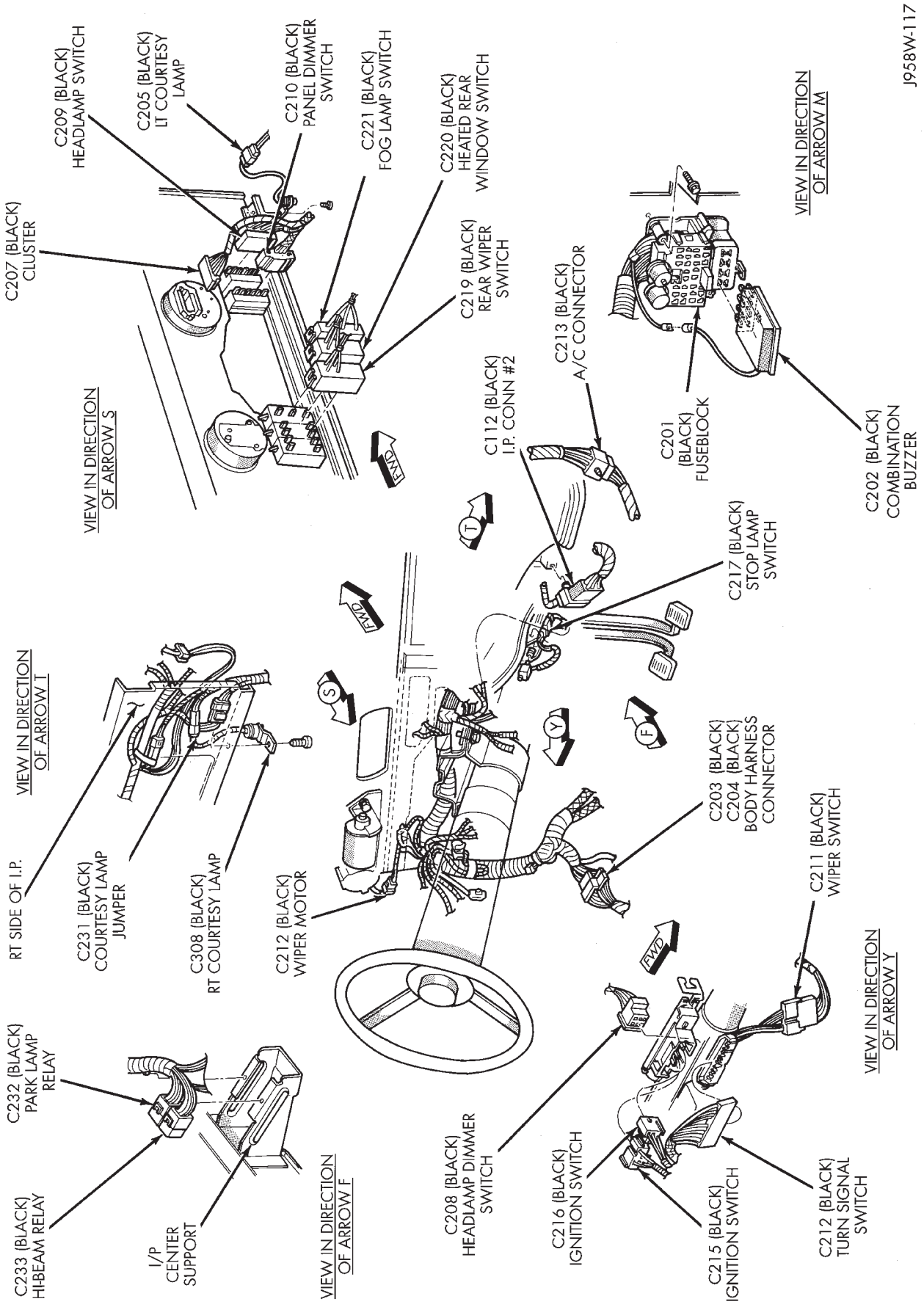

Fig. 7 Instrument Panel Connections YJ

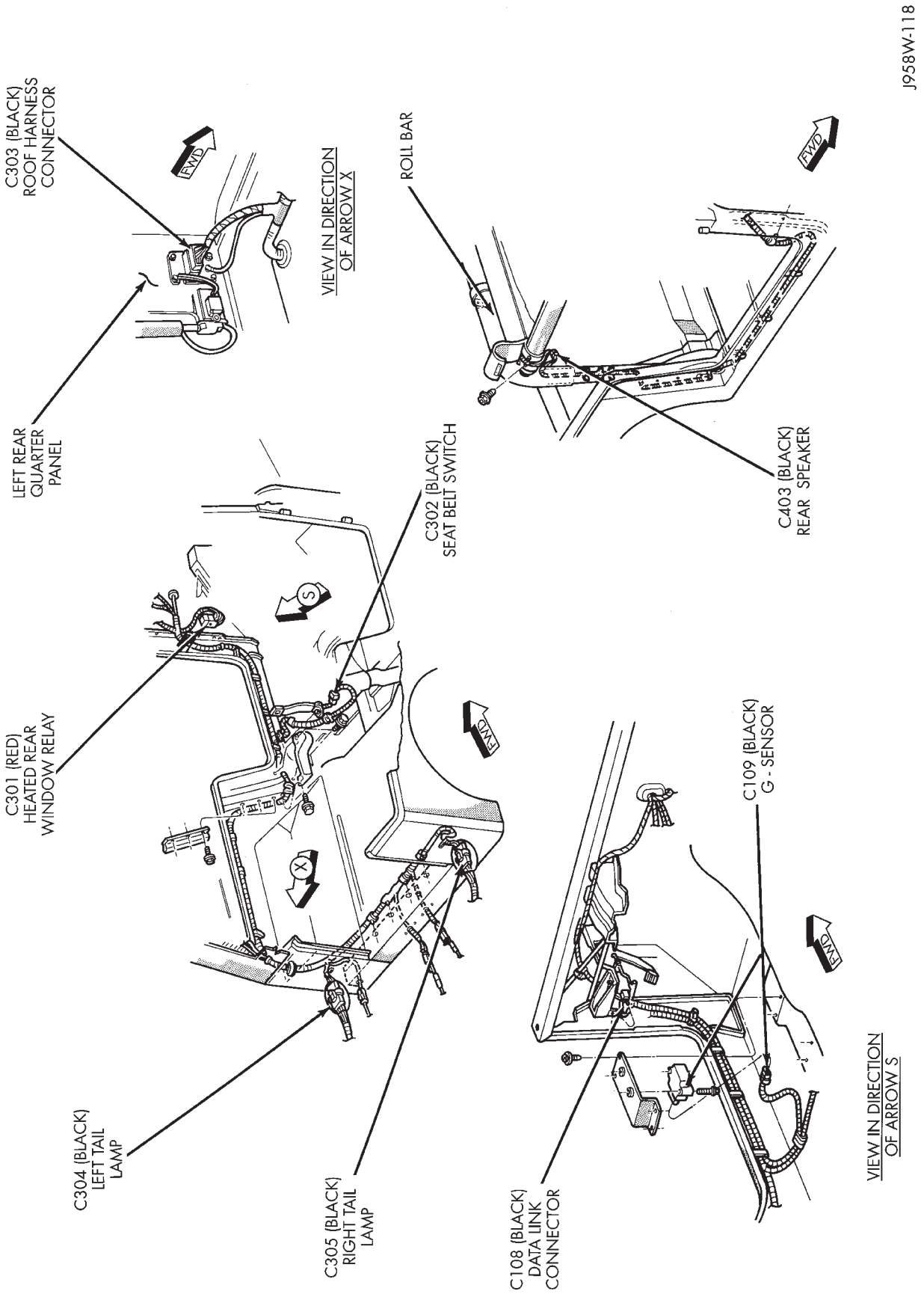

Fig. 8 Body Connections YJ

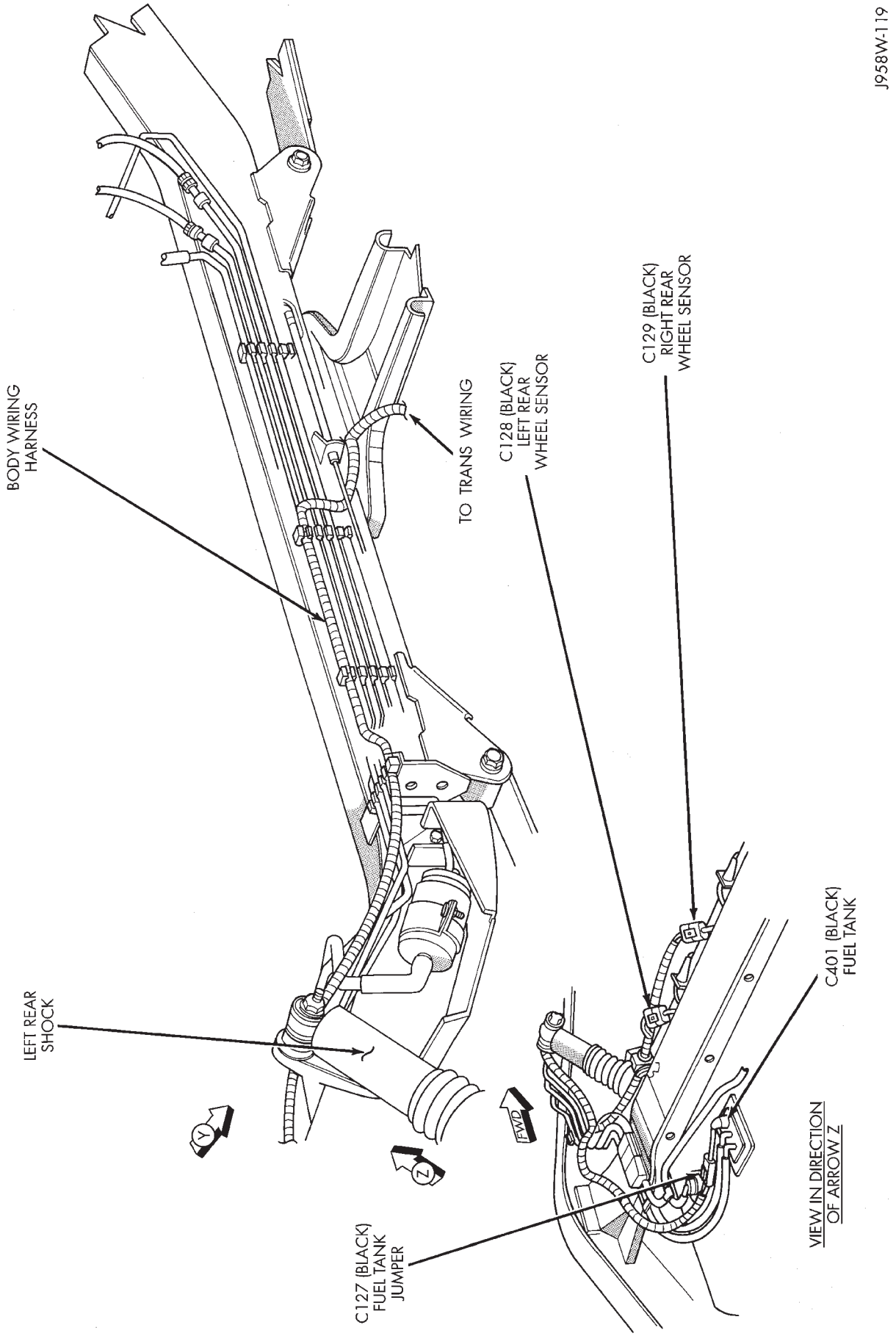

Fig. 9 Frame Connections YJ

SPLICE LOCATIONS

GENERAL INFORMATION

This section provides illustrations identifying the general location of the splices in this vehicle. A splice index is provided. Use the wiring diagrams in each section for splice number identification. Refer to the index for the proper splice number.

SPLICE LOCATIONS

Splice Number	Locations	Fig.
S101	Near PDC T/O	1
S102	Near T/O for Engine Wiring	1
S103	RT Dash Panel Near T/o for Ground	1
S104	Near T/O for MAP Sensor	1
S105	Near T/O for MAP Sensor	1
S106	Left Side of MAP Sensor	1
S107	In ABS Wiring T/O Near Grommet	1
S108	In ABS Wiring T/O Near Grommet	1
S109	Above Brake Booster	1
S110	Rear of Generator	3
S111 2.5L	RT Side of Valve Cover	4
S111 4.0L	RT Side of Valve Cover	3
S112	Near T/O for PRNDL Switch	5
S113	Between Inj #2 and Inj #3	3
S114	Near T/O for Throttle Body Wiring	3
S115	Above Bulkhead Connector	1
S116	Above Bulkhead Connector	1
S117	Near Data Link T/O	1
S118	Near Data Link T/O	1
S119	Near Data Link T/O	1
S120 4.0L	RT Side of Valve Cover	3
S121 2.5L	RT Side of Valve Cover	4
S122	Near T/O for RT PK/TURN Lamp	2
S123	Near T/O for RT Fog Lamp	2
S124	Near T/O for LT Fog Lamp	2
S125	Near T/O for LT PK/TURN Lamp	2
S126	Near T/O for Headlamp	2
S127	Near T/O for Headlamp	2
S128	Near T/O for Headlamp	2
S129	Near Horn T/O	2
S201	Near T/O for Dimmer Switch	7
S202	Near T/O for Dimmer Switch	7
S203	Near T/O for Dimmer Switch	7
S204	Near T/O for Dimmer Switch	7
S205	Near T/O for Wiper Switch	7
S206	Near T/O for Wiper Switch	7
S207	Near Panel Illumination T/O	7
S208	Near Panel Illumination T/O	7
S209	Near Panel Illumination T/O	7
S210	Near Panel Illumination T/O	7
S211	Near T/O for Ignition Switch	7
S212	Near T/O for Ignition Switch	7
S213	Near T/O for Radio	6
S301	Near T/O for Park Brake Switch	8
S302	Near T/O for Park Brake Switch	8
S303	Near Grommet LT Rear Quarter Panel	8
S304	Near LT Rear Tail Lamp T/O	8
S305	RT Rear Quarter Panel Near Tail Lamp	8
S306	Near T/O for Dome Lamp	Not Shown
S307	In CHMSL Jumper Harness	Not Shown
S308	In CHMSL Jumper Harness	Not Shown

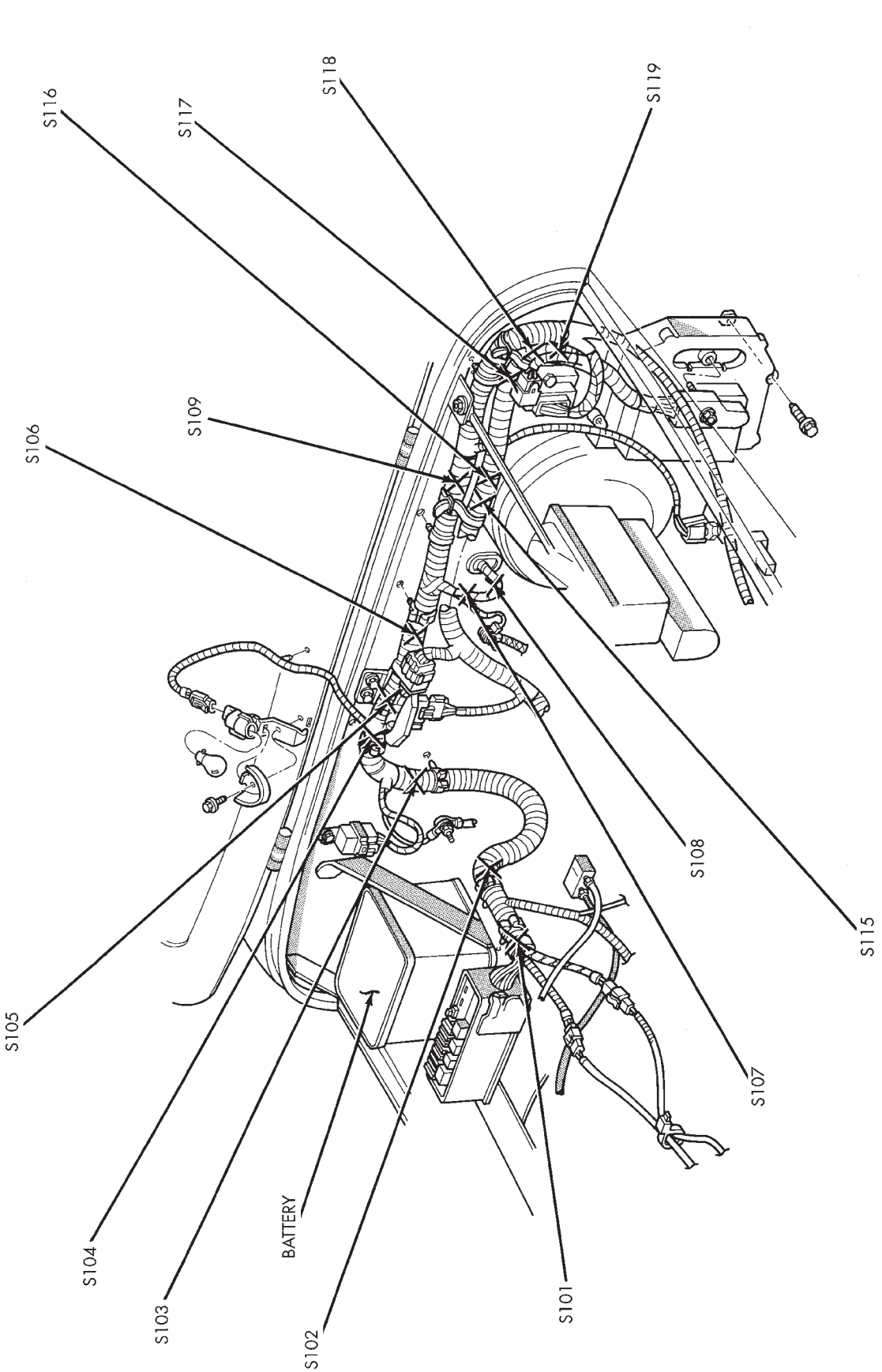

Fig. 1 Engine Compartment Splices YJ

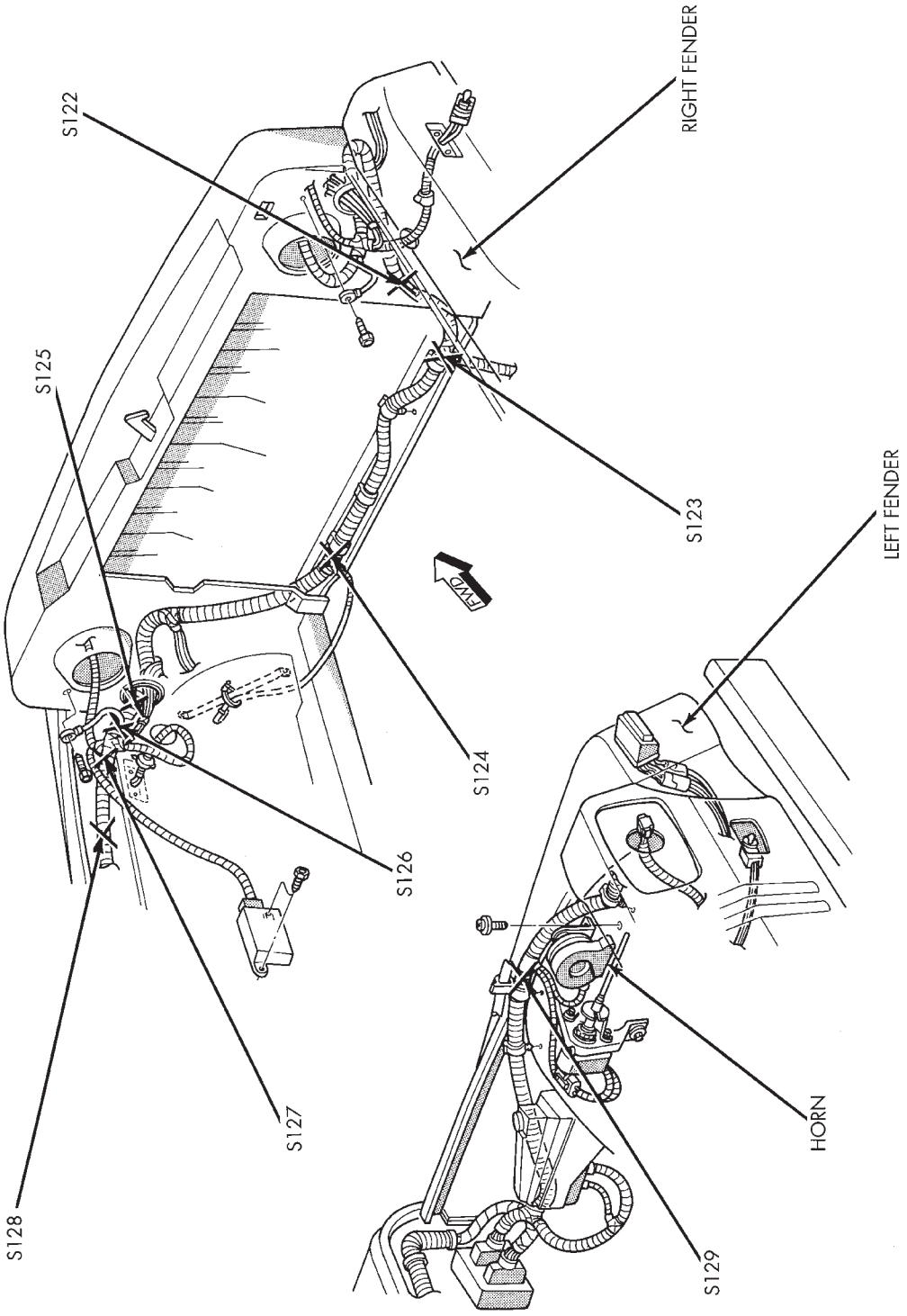

Fig. 2 Engine Compartment Splices YJ

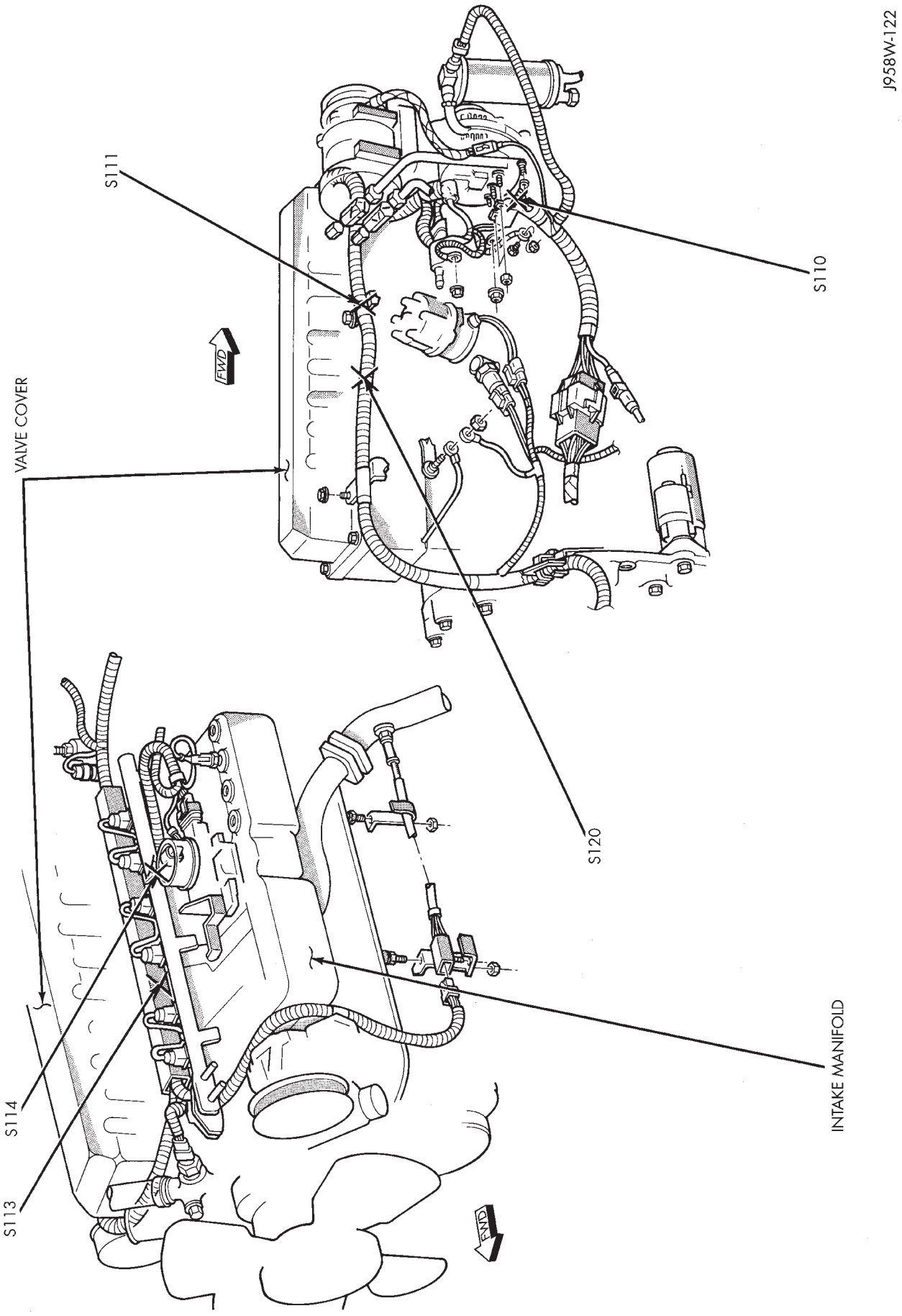

Fig. 3 Engine Splices 4.0L YJ

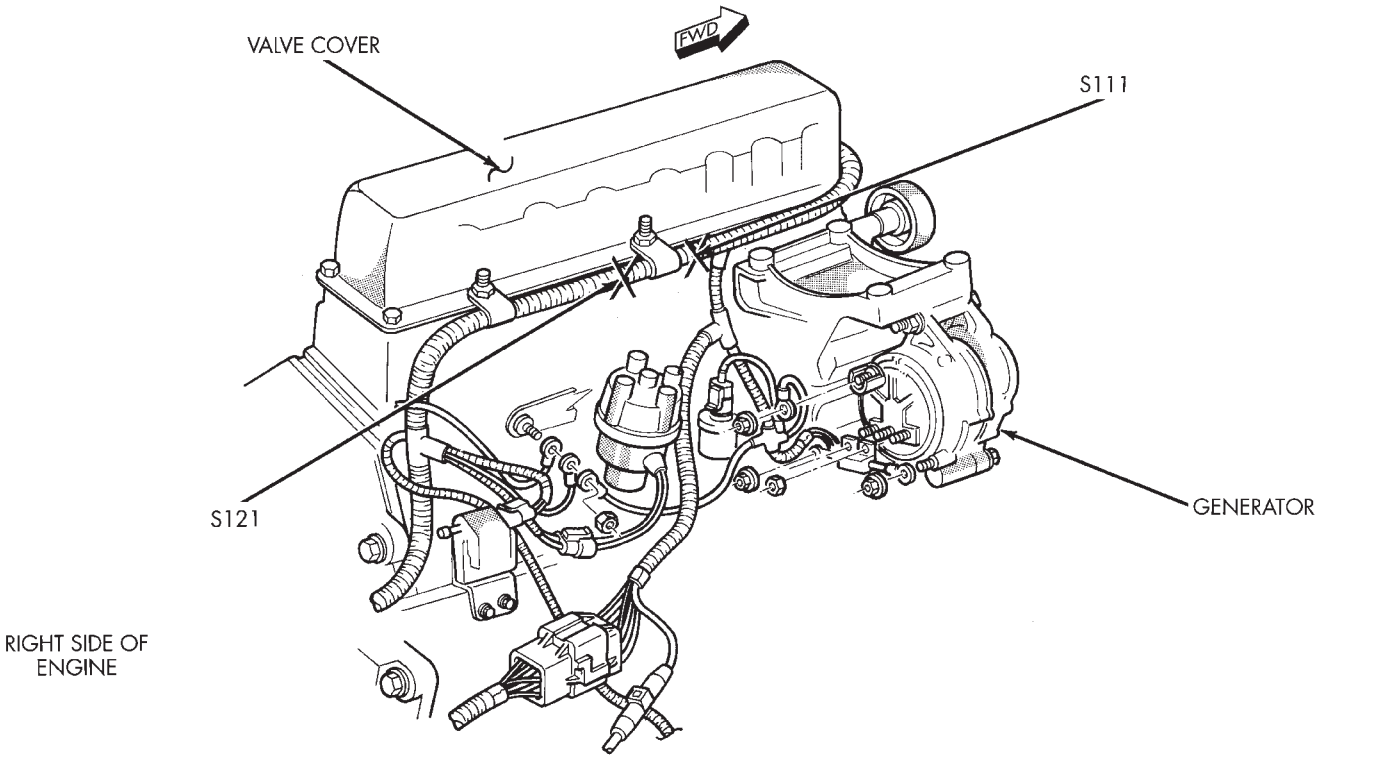

Fig. 4 Engine Splices 2.5L YJ

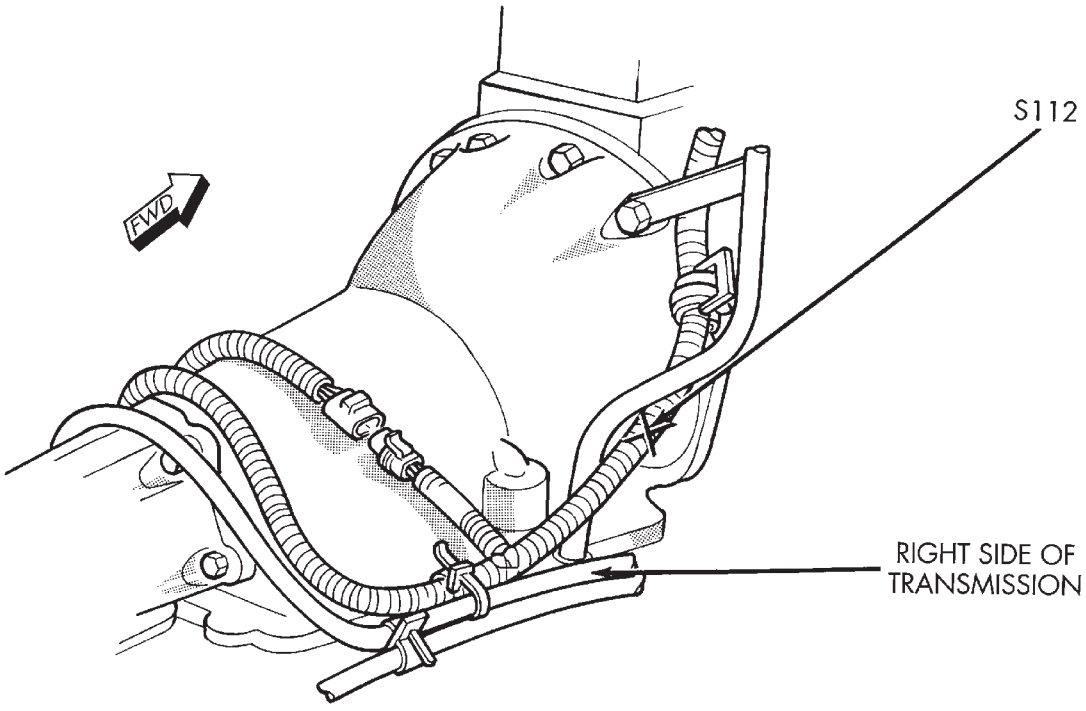

Fig. 5 Transmission Splices YJ

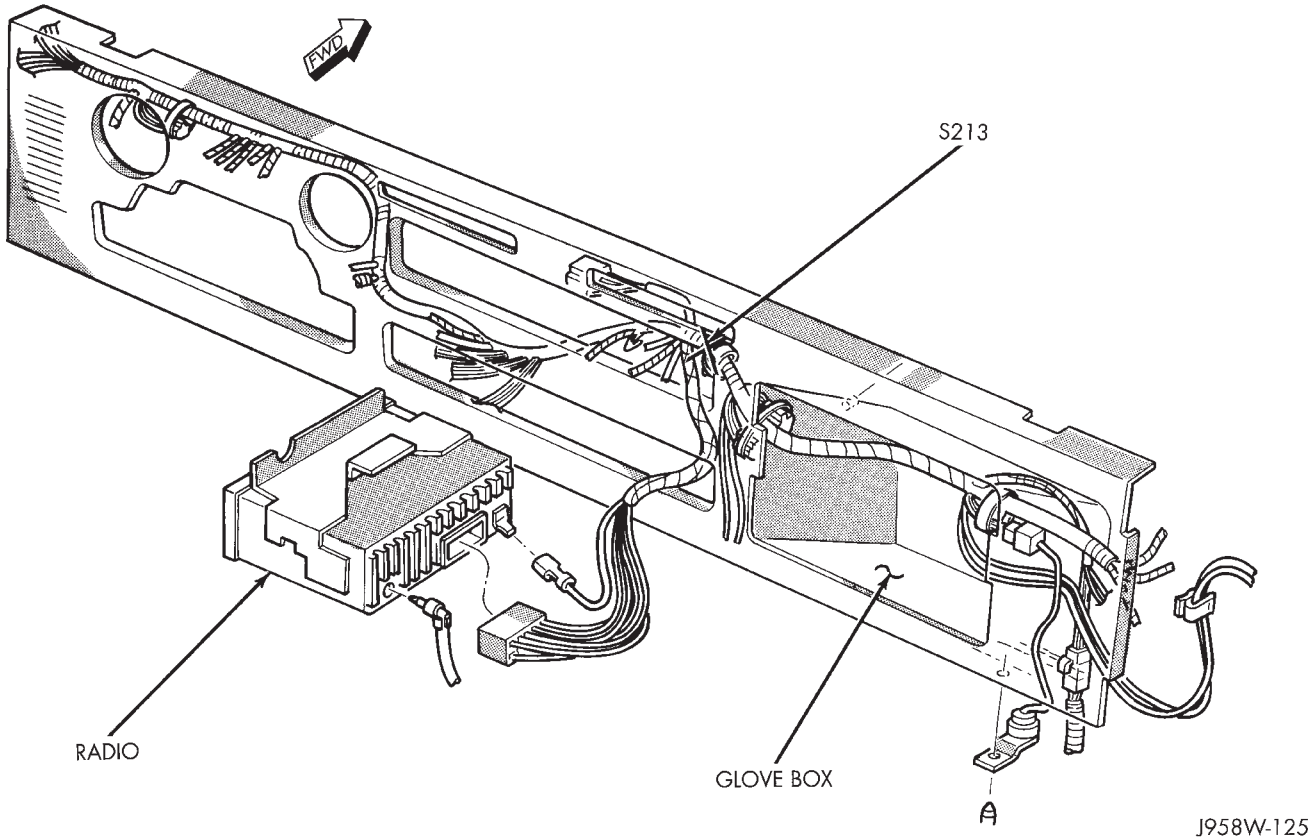

Fig. 6 Instrument Panel Splices YJ

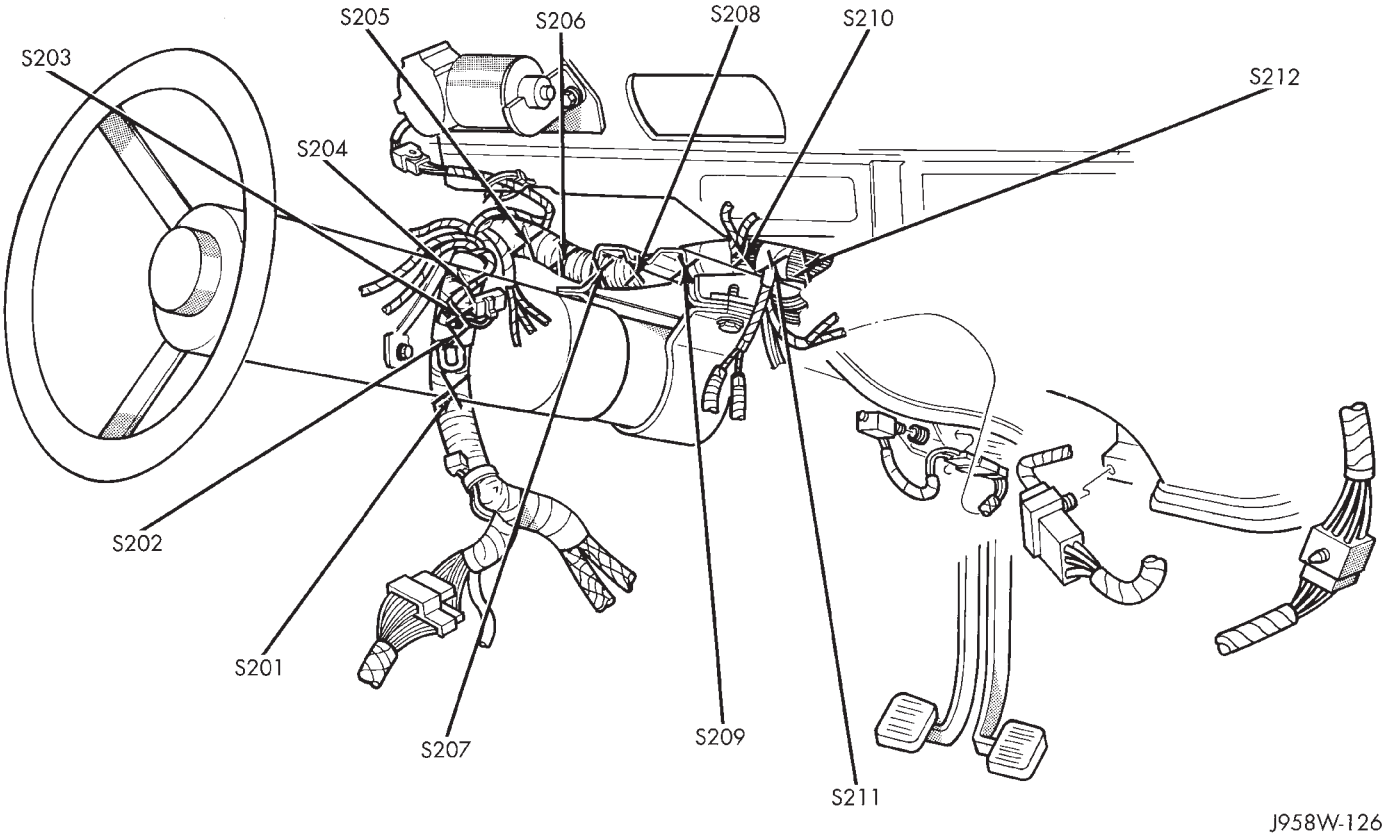

Fig. 7 Instrument Panel Splices YJ

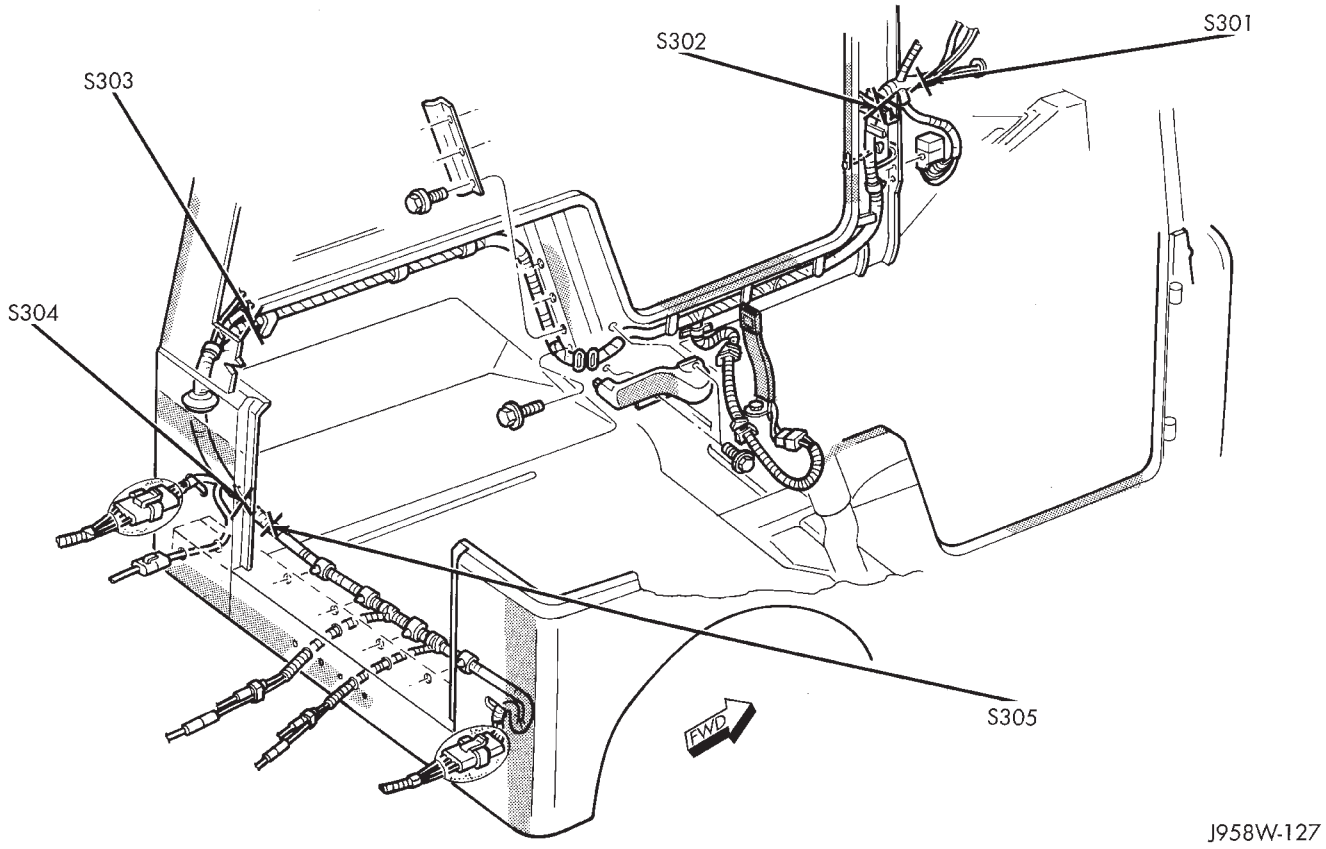

Fig. 8 Body Splices YJ

ENGINES

CONTENTS

page

LUBRICATION SYSTEM 37
LUBRICATION SYSTEM 79
2.5L ENGINE SERVICE PROCEDURES 13
4.0L ENGINE SERVICE PROCEDURES 55
ENGINE DIAGNOSIS 5
STANDARD SERVICE PROCEDURES 1

STANDARD SERVICE PROCEDURES

INDEX

page

Engine Performance 2
Form-In-Place Gaskets 1
Honing Cylinder Bores 2
Hydrostatic Lock 4
Measuring with Plastigage 3
Repair Damaged or Worn Threads 4
Service Engine Assembly (Short Block) 4

FORM-IN-PLACE GASKETS

There are several places where form-in-place gaskets are used on the engine. **DO NOT use form-in-place gasket material unless specified.** Care must be taken when applying form-in-place gaskets. Bead size, continuity and location are of great importance. Too thin a bead can result in leakage while too much can result in spill-over. A continuous bead of the proper width is essential to obtain a leak-free joint.

Two types of form-in-place gasket materials are used in the engine area (Mopar Silicone Rubber Adhesive Sealant and Mopar Gasket Maker). Each have different properties and cannot be used interchangeably.

MOPAR SILICONE RUBBER ADHESIVE SEALANT

Mopar Silicone Rubber Adhesive Sealant, normally black in color, is available in 3 ounce tubes. Moisture in the air causes the sealant material to cure. This material is normally used on flexible metal flanges. It has a shelf life of a year and will not properly cure if over aged. Always inspect the package for the expiration date before use.

MOPAR GASKET MAKER

Mopar Gasket Maker, normally red in color, is available in 6 cc tubes. This anaerobic type gasket material cures in the absence of air when squeezed between smooth machined metallic surfaces. It will not cure if left in the uncovered tube. DO NOT use on flexible metal flanges.

SURFACE PREPARATION

Parts assembled with form-in-place gaskets may be disassembled without unusual effort. In some instances, it may be necessary to lightly tap the part with a mallet or other suitable tool to break the seal between the mating surfaces. A flat gasket scraper may also be lightly tapped into the joint but care must be taken not to damage the mating surfaces.

Scrape or wire brush all gasket surfaces to remove all loose material. Inspect stamped parts to ensure gasket rails are flat. Flatten rails with a hammer on a flat plate, if required. Gasket surfaces must be free of oil and dirt. Make sure the old gasket material is removed from blind attaching holes.

GASKET APPLICATION

Assembling parts using a form-in-place gasket requires care.

Mopar Silicone Rubber Adhesive Sealant should be applied in a continuous bead approximately 3 mm (0.12 inch) in diameter. All mounting holes must be circled. For corner sealing, a 3 or 6 mm (1/8 or 1/4 inch) drop is placed in the center of the gasket contact area. Uncured sealant may be removed with a shop towel. Components should be torqued in place while the sealant is still wet to the touch (within 10

minutes). The use of a locating dowel is recommended during assembly to prevent smearing the material off location.

Mopar Gasket Maker should be applied sparingly to one gasket surface. The sealant diameter should be 1.00 mm (0.04 inch) or less. Be certain the material surrounds each mounting hole. Excess material can easily be wiped off. Components should be torqued in place within 15 minutes. The use of a locating dowel is recommended during assembly to prevent smearing the material off location.

ENGINE PERFORMANCE

To provide best vehicle performance and lowest vehicle emissions, it is most important that the tune-up be done accurately. Use the specifications listed on the Vehicle Emission Control Information label found on the engine compartment hood.

(1) Test battery specific gravity. Add water, if necessary. Clean and tighten battery connections.

(2) Test cranking amperage draw (refer to Group 8B, Battery/Starter Service for the proper procedures).

(3) Tighten the intake manifold bolts (refer to Group 11, Exhaust System and Intake Manifold for the proper specifications).

(4) Perform cylinder compression test:

(a) Check engine oil level and add oil, if necessary.

(b) Drive the vehicle until engine reaches normal operating temperature.

(c) Select a route free from traffic and other forms of congestion, observe all traffic laws and briskly accelerate through the gears several times. The higher engine speed may help clean out valve seat deposits which can prevent accurate compression readings.

CAUTION: DO NOT overspeed the engine.

(d) Remove all spark plugs from engine. As spark plugs are being removed, check electrodes for abnormal firing indicators—fouled, hot, oily, etc. Record cylinder number of spark plug for future reference.

(e) Disconnect coil wire from distributor and secure to good ground to prevent a spark from starting a fire.

(f) Be sure throttle blades are fully open during the compression check.

(g) Insert compression gage adaptor into the No.1 spark plug hole. Crank engine until maximum pressure is reached on gauge. Record this pressure as No.1 cylinder pressure.

(h) Repeat Step 4g for all remaining cylinders.

(i) Compression should not be less than 689 kPa (100 psi) and not vary more than 172 kPa (25 psi) from cylinder to cylinder.

(j) If cylinder(s) have abnormally low compression pressures, repeat steps 4a through 4h.

(k) If the same cylinder(s) repeat an abnormally low reading, it could indicate the existence of a problem in the cylinder.

The recommended compression pressures are to be used only as a guide to diagnosing engine problems. An engine should NOT be disassembled to determine the cause of low compression unless some malfunction is present.

(5) Clean or replace spark plugs as necessary. Adjust gap (refer to Group 8D, Ignition System for gap adjustment and torque).

(6) Test resistance of spark plug cables (refer to Group 8D, Ignition System).

(7) Inspect the primary wire. Test coil output voltage, primary and secondary resistance. Replace parts as necessary (refer to Group 8D, Ignition System and make necessary adjustment).

(8) Perform a combustion analysis.

(9) Test fuel pump for pressure (refer to Group 14, Fuel System for the proper specifications).

(10) Inspect air filter element (refer to Group 0, Lubrication and Maintenance for the proper procedure).

(11) Inspect crankcase ventilation system (refer to Group 0, Lubrication and Maintenance for the proper procedure).

(12) For emission controls refer to Group 25, Emission Controls System for service procedures.

(13) Inspect and adjust accessory belt drives (refer to Group 7, Cooling System for the proper adjustments).

(14) Road test vehicle as a final test.

HONING CYLINDER BORES

Before honing, stuff plenty of clean shop towels under the bores and over the crankshaft to keep abrasive materials from entering the crankshaft area.

(1) Used carefully, the Cylinder Bore Sizing Hone C-823 equipped with 220 grit stones, is the best tool for this job. In addition to deglazing, it will reduce taper and out-of-round as well as removing light scuffing, scoring or scratches. Usually a few strokes will clean up a bore and maintain the required limits.

CAUTION: DO NOT use rigid type hones to remove cylinder wall glaze.

(2) Deglazing of the cylinder walls may be done if the cylinder bore is straight and round. Use a cylinder surfacing hone, Honing Tool C-3501, equipped with 280 grit stones (C-3501-3810). 20-60 strokes, depending on the bore condition, will be sufficient to provide a satisfactory surface. Using honing oil C-3501-3880 or a light honing oil available from major oil distributors.

CAUTION: DO NOT use engine or transmission oil, mineral spirits or kerosene.

(3) Honing should be done by moving the hone up and down fast enough to get a crosshatch pattern. The hone marks should INTERSECT at 50° to 60° for proper seating of rings (Fig. 1).

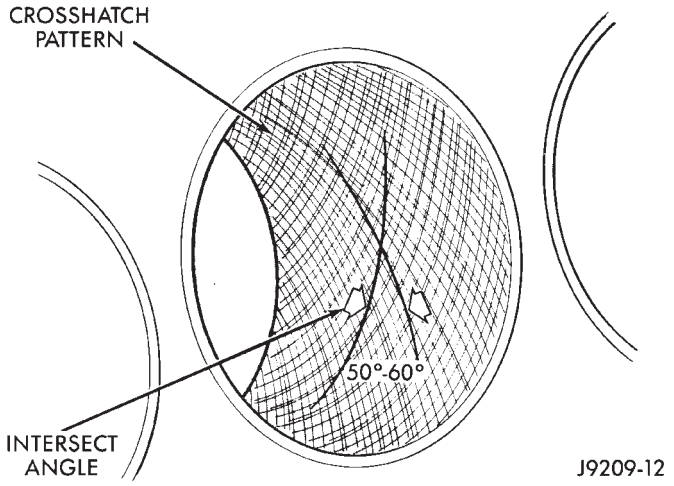

Fig. 1 Cylinder Bore Crosshatch Pattern

(4) A controlled hone motor speed between 200 and 300 RPM is necessary to obtain the proper crosshatch angle. The number of up and down strokes per minute can be regulated to get the desired 50° to 60° angle. Faster up and down strokes increase the crosshatch angle.

(5) After honing, it is necessary that the block be cleaned to remove all traces of abrasive. Use a brush to wash parts with a solution of hot water and detergent. Dry parts thoroughly. Use a clean, white, lint-free cloth to check that the bore is clean. Oil the bores after cleaning to prevent rusting.

MEASURING WITH PLASTIGAGE

CRANKSHAFT MAIN BEARING CLEARANCE

Engine crankshaft bearing clearances can be determined by use of Plastigage, or equivalent. The following is the recommended procedures for the use of Plastigage:

(1) Remove oil film from surface to be checked. Plastigage is soluble in oil.

(2) The total clearance of the main bearings can only be determined by removing the weight of the crankshaft. This can be accomplished by either of two methods:

METHOD - 1 (PREFERRED)—Shim the bearings adjacent to the bearing to be checked. This will remove the clearance between upper bearing shell and the crankshaft. Place a minimum of 0.254 mm (0.010 inch) shim between the bearing shell and the adjacent bearing cap. Tighten the bolts to 18 N·m (13 ft. lbs.) torque.

- **ALL ENGINES**—When checking No.1 main bearing; shim No.2 main bearing.
- **ALL ENGINES**—When checking No.2 main bearing; shim No.1 and No.3 main bearing.
- **ALL ENGINES**—When checking No.3 main bearing; shim No.2 and No.4 main bearing.
- **ALL ENGINES**—When checking No.4 main bearing; shim No.3 and No.5 main bearing.
- **2.5L ENGINE**—When checking No.5 main bearing; shim No.4 main bearing.
- **4.0L ENGINE**—When checking No.5 main bearing; shim No.4 and No.6 main bearing.
- **4.0L ENGINE**—When checking No.6 main bearing; shim No.5 and No.7 main bearing.
- **4.0L ENGINE**—When checking No.7 main bearing; shim No.6 main bearing.

Remove all shims before assembling engine.

METHOD - 2 (ALTERNATIVE)—The weight of the crankshaft is supported by a jack under the counterweight adjacent to the bearing being checked.

(3) Place a piece of Plastigage across the entire width of the bearing cap shell (Fig. 2). Position the Plastigage approximately 6.35 mm (1/4 inch) off center and away from the oil holes. In addition, suspect areas can be checked by placing the Plastigage in that area. Tighten the bearing cap bolts of the bearing being checked to 108 N·m (80 ft. lbs.) torque. **DO NOT rotate the crankshaft or the Plastigage may be smeared, giving inaccurate results.**

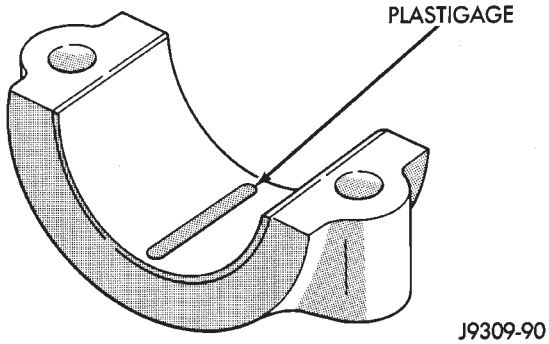

Fig. 2 Placement of Plastigage in Bearing Shell

(4) Remove the bearing cap and compare the width of the flattened Plastigage with the scale provided on the package (Fig. 3). Plastigage generally comes in 2 scales (one scale is in inches and the other is a metric scale). Locate the band closest to the same width. This band shows the amount of clearance. Differences in readings between the ends indicate the amount of taper present. Record all readings taken (refer to Engine Specifications).

(5) Plastigage is available in a variety of clearance ranges. The 0.025-0.076 mm (0.001-0.003 inch) range is usually the most appropriate for checking engine bearing clearances.

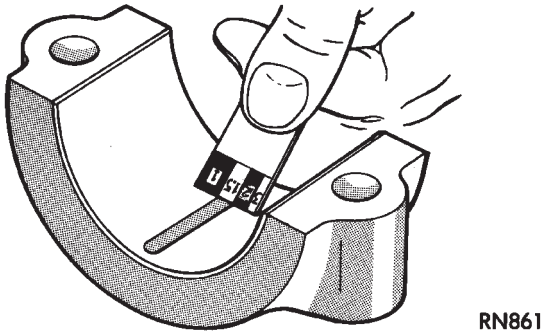

Fig. 3 Clearance Measurement

CONNECTING ROD BEARING CLEARANCE

Engine connecting rod bearing clearances can be determined by use of Plastigage, or equivalent. The following is the recommended procedures for the use of Plastigage:

(1) Remove oil film from surface to be checked. Plastigage is soluble in oil.

(2) Place a piece of Plastigage across the entire width of the bearing cap shell (Fig. 2). Position the Plastigage approximately 6.35 mm (1/4 inch) off center and away from the oil holes. In addition, suspect areas can be checked by placing the Plastigage in the suspect area.

(3) The crankshaft must be turned until the connecting rod to be checked starts moving toward the top of the engine. Only then should the rod cap with Plastigage in place be assembled. Tighten the rod cap nut to 45 N·m (33 ft. lbs.) torque. **DO NOT rotate the crankshaft or the Plastigage may be smeared, giving inaccurate results.**

(4) Remove the bearing cap and compare the width of the flattened Plastigage with the scale provided on the package (Fig. 3). Plastigage generally comes in 2 scales (one scale is in inches and the other is a metric scale). Locate the band closest to the same width. This band shows the amount of clearance. Differences in readings between the ends indicate the amount of taper present. Record all readings taken (refer to Engine Specifications).

(5) Plastigage is available in a variety of clearance ranges. The 0.025-0.076 mm (0.001-0.003 inch) range is usually the most appropriate for checking engine bearing clearances.

REPAIR DAMAGED OR WORN THREADS

Damaged or worn threads can be repaired. Essentially, this repair consists of:

- Drilling out worn or damaged threads.
- Tapping the hole with a special Heli-Coil Tap, or equivalent.
- Installing an insert into the tapped hole.

This brings the hole back to its original thread size.

CAUTION: Be sure that the tapped holes maintain the original center line.

Heli-Coil tools and inserts are readily available from automotive parts jobbers.

SERVICE ENGINE ASSEMBLY (SHORT BLOCK)

A service replacement engine assembly (short block) may be installed whenever the original cylinder block is defective or damaged beyond repair. It consists of the cylinder block, crankshaft, piston and rod assemblies. If needed, the camshaft must be procured separately and installed before the engine is installed in the vehicle.

A short block is identified with the letter "S" stamped on the same machined surface where the build date code is stamped for complete engine assemblies.

Installation includes the transfer of components from the defective or damaged original engine. Follow the appropriate procedures for cleaning, inspection and torque tightening.

HYDROSTATIC LOCK

When an engine is suspected of hydrostatic lock (regardless of what caused the problem), follow the steps below.

(1) Perform the Fuel Pressure Release Procedure (refer to Group 14, Fuel System).

(2) Disconnect the negative cable from the battery.

(3) Inspect air cleaner, induction system and intake manifold to ensure system is dry and clear of foreign material.

(4) Place a shop towel around the spark plugs to catch any fluid that may possibly be under pressure in the cylinder head. Remove the plugs from the engine.

CAUTION: DO NOT use the starter motor to rotate the crankshaft. Severe damage could occur.

(5) With all spark plugs removed, rotate the crankshaft using a breaker bar and socket.

(6) Identify the fluid in the cylinders (i.e. coolant, fuel, oil, etc.).

(7) Make sure all fluid has been removed from the cylinders.

(8) Repair engine or components as necessary to prevent this problem from occurring again.

(9) Squirt engine oil into the cylinders to lubricate the walls. This will prevent damage on restart.

(10) Install new spark plugs. Tighten the spark plugs to 37 N·m (27 ft. lbs.) torque.

(11) Drain engine oil. Remove and discard the oil filter.

(12) Install the drain plug. Tighten the plug to 34 N·m (25 ft. lbs.) torque.

(13) Install a new oil filter.

(14) Fill engine crankcase with the specified amount and grade of oil (refer to Group 0, Lubrication and Maintenance).

(15) Connect the negative cable to the battery.

(16) Start the engine and check for any leaks.

ENGINE DIAGNOSIS

Engine diagnosis is helpful in determining the causes of malfunctions not detected and remedied by routine tune-ups.

These malfunctions may be classified as either performance (e.g., engine idles rough and stalls) or mechanical (e.g., a strange noise).

Refer to the Service Diagnosis—Performance chart and the Service Diagnosis—Mechanical chart for possible causes and corrections of malfunctions. Refer to Group 14, Fuel System for the fuel system diagnosis.

GENERAL INFORMATION

Additional tests and diagnostic procedures may be necessary for specific engine malfunctions that can not be isolated with the Service Diagnosis charts. Information concerning additional tests and diagnosis is provided within the following diagnosis:

- Cylinder Compression Pressure Test.
- Cylinder Combustion Pressure Leakage Test.
- Engine Cylinder Head Gasket Failure Diagnosis.
- Intake Manifold Leakage Diagnosis.

INTAKE MANIFOLD LEAKAGE DIAGNOSIS

An intake manifold air leak is characterized by lower than normal manifold vacuum. Also, one or more cylinders may not be functioning.

WARNING: USE EXTREME CAUTION WHEN THE ENGINE IS OPERATING. DO NOT STAND IN A DIRECT LINE WITH THE FAN. DO NOT PUT YOUR HANDS NEAR THE PULLEYS, BELTS OR THE FAN. DO NOT WEAR LOOSE CLOTHING.

METHOD 1

(1) Start the engine.

(2) Spray a small stream of water at the suspected leak area.

(3) If a change in RPM'S, the area of the suspected leak has been found.

(4) Repair as required.

CYLINDER COMPRESSION PRESSURE TEST

The results of a cylinder compression pressure test can be utilized to diagnose several engine malfunctions.

Ensure the battery is completely charged and the engine starter motor is in good operating condition. Otherwise the indicated compression pressures may not be valid for diagnosis purposes.

(1) Clean the spark plug recesses with compressed air.

(2) Remove the spark plugs.

(3) Secure the throttle in the wide-open position.

(4) Disconnect the ignition coil.

(5) Insert a compression pressure gauge and rotate the engine with the engine starter motor for three revolutions.

(6) Record the compression pressure on the 3rd revolution. Continue the test for the remaining cylinders.

Refer to Engine Specifications for the correct engine compression pressures.

ENGINE CYLINDER HEAD GASKET FAILURE DIAGNOSIS

A leaking engine cylinder head gasket usually results in loss of power, loss of coolant and engine misfiring.

An engine cylinder head gasket leak can be located between adjacent cylinders or between a cylinder and the adjacent water jacket.

- An engine cylinder head gasket leaking between adjacent cylinders is indicated by a loss of power and/or engine misfire.
- An engine cylinder head gasket leaking between a cylinder and an adjacent water jacket is indicated by coolant foaming or overheating and loss of coolant.

CYLINDER-TO-CYLINDER LEAKAGE TEST

To determine if an engine cylinder head gasket is leaking between adjacent cylinders; follow the procedures outlined in Cylinder Compression Pressure Test. An engine cylinder head gasket leaking between adjacent cylinders will result in approximately a 50-70% reduction in compression pressure.

CYLINDER-TO-WATER JACKET LEAKAGE TEST

WARNING: USE EXTREME CAUTION WHEN THE ENGINE IS OPERATING. DO NOT STAND IN A DIRECT LINE WITH THE FAN. DO NOT PUT YOUR HANDS NEAR THE PULLEYS, BELTS OR THE FAN. DO NOT WEAR LOOSE CLOTHING.

Remove the radiator cap.

Start the engine and allow it to warm up until the engine thermostat opens.

If a large combustion/compression pressure leak exists, bubbles will be visible in the coolant.

If bubbles are not visible, install a radiator pressure tester and pressurize the coolant system.

If a cylinder is leaking combustion pressure into the water jacket, the tester pointer will pulsate with every combustion stroke of the cylinder.

CYLINDER COMBUSTION PRESSURE LEAKAGE TEST

The combustion pressure leakage test provides an accurate means for determining engine condition.

Combustion pressure leakage testing will detect:

- Exhaust and intake valve leaks (improper seating).
- Leaks between adjacent cylinders or into water jacket.
- Any causes for combustion/compression pressure loss.

WARNING: DO NOT REMOVE THE RADIATOR CAP WITH THE SYSTEM HOT AND UNDER PRESSURE BECAUSE SERIOUS BURNS FROM COOLANT CAN OCCUR.

Check the coolant level and fill as required. DO NOT install the radiator cap.

Start and operate the engine until it attains normal operating temperature, then turn the engine OFF.

Remove the spark plugs.

Remove the oil filler cap.

Remove the air cleaner.

Calibrate the tester according to the manufacturer's instructions. The shop air source for testing should maintain 483 kPa (70 psi) minimum, 1 379 kPa (200 psi) maximum and 552 kPa (80 psi) recommended.

Perform the test procedures on each cylinder according to the tester manufacturer's instructions. While testing, listen for pressurized air escaping through the throttle body, tailpipe and oil filler cap opening. Check for bubbles in the radiator coolant.

All gauge pressure indications should be equal, with no more than 25% leakage.

FOR EXAMPLE: At 552 kPa (80 psi) input pressure, a minimum of 414 kPa (60 psi) should be maintained in the cylinder.

Refer to the Cylinder Combustion Pressure Leakage Test Diagnosis chart.

INSPECTION (ENGINE OIL LEAKS IN GENERAL)

Begin with a through visual inspection of the engine, particularly at the area of the suspected leak. If an oil leak source is not readily identifiable, the following steps should be followed:

(1) Do not clean or degrease the engine at this time because some solvents may cause rubber to swell, temporarily stopping the leak.

(2) Add an oil soluble dye (use as recommended by manufacturer). Start the engine and let idle for approximately 15 minutes. Check the oil dipstick to make sure the dye is thoroughly mixed as indicated with a bright yellow color under a black light.

(3) Using a black light, inspect the entire engine for fluorescent dye, particularly at the suspected area of oil leak. If the oil leak is found and identified, repair per service manual instructions.

(4) If dye is not observed, drive the vehicle at various speeds for approximately 24km (15 miles), and repeat step (3).

If the oil leak source is not positively identified at this time, proceed with the air leak detection test method as follows:

(1) Disconnect the breather cap to air cleaner hose at the breather cap end. Cap or plug breather cap nipple.

(2) Remove the PCV valve from the cylinder head cover. Cap or plug the PCV valve grommet.

(3) Attach an air hose with pressure gauge and regulator to the dipstick tube.

CAUTION: Do not subject the engine assembly to more than 20.6 kpa (3 PSI) of test pressure.

(4) Gradually apply air pressure from 1 psi to 2.5 psi maximum while applying soapy water at the suspected source. Adjust the regulator to the suitable test pressure that provide the best bubbles which will pinpoint the leak source. If the oil leak is detected and identified, repair per service manual procedures.

(5) If the leakage occurs at the rear oil seal area, refer to the section, Inspection for Rear Seal Area Leak.

(6) If no leaks are detected, turn off the air supply and remove the air hose and all plugs and caps. Install the PCV valve and breather cap hose. Proceed to step 7.

(7) Clean the oil off the suspect oil leak area using a suitable solvent. Drive the vehicle at various speeds approximately 24 km (15 miles). Inspect the engine for signs of an oil leak by using a black light.

INSPECTION FOR REAR SEAL AREA LEAKS

Since it is sometimes difficult to determine the source of an oil leak in the rear seal area of the engine, a more involved inspection is necessary. The following steps should be followed to help pinpoint the source of the leak.

If the leakage occurs at the crankshaft rear oil seal area:

(1) Disconnect the battery.

(2) Raise the vehicle.

(3) Remove torque converter or clutch housing cover and inspect rear of block for evidence of oil. Use a black light to check for the oil leak:

(a) Circular spray pattern generally indicates seal leakage or crankshaft damage.

(b) Where leakage tends to run straight down, possible causes are a porous block, distributor seal, camshaft bore cup plugs oil galley pipe plugs, oil

filter runoff, and main bearing cap to cylinder block mating surfaces. See Group 9, Engines for proper repair procedures of these items.

(4) If no leaks are detected, pressurized the crankcase as outlined in the, Inspection (Engine oil Leaks in general)

CAUTION: Do not exceed 20.6 kPa (3 psi).

(5) If the leak is not detected, very slowly turn the crankshaft and watch for leakage. If a leak is detected between the crankshaft and seal while slowly turning the crankshaft, it is possible the crankshaft seal surface is damaged. The seal area on the crankshaft could have minor nicks or scratches that can be polished out with emery cloth.

CAUTION: Use extreme caution when crankshaft polishing is necessary to remove minor nicks and scratches. The crankshaft seal flange is especially machined to complement the function of the rear oil seal.

(6) For bubbles that remain steady with shaft rotation, no further inspection can be done until disassembled. Refer to the service Diagnosis—Mechanical, under the Oil Leak row for components inspections on possible causes and corrections.

(7) After the oil leak root cause and appropriate corrective action have been identified, Refer to Group 9, Engines—Crankshaft Rear Oil Seals, for proper replacement procedures.

ENGINE OIL PRESSURE

(1) Remove oil pressure sending unit.

(2) Install Oil Pressure Line and Gauge Tool C-3292. Start engine and record pressure. Refer to Oil Pressure in Engine Specifications for the proper pressures.

CYLINDER COMBUSTION PRESSURE LEAKAGE TEST DIAGNOSIS

CONDITION	POSSIBLE CAUSE	CORRECTION
AIR ESCAPES THROUGH CARBURETOR/THROTTLE BODY	Intake valve not seated properly.	Inspect valve. Reface or replace, if necessary.
AIR ESCAPES THROUGH TAILPIPE	Exhaust valve not seated properly.	Inspect valve.Reface or replace, if necessary.
AIR ESCAPES THROUGH RADIATOR	Head gasket leaks or crack in cylinder block.	Remove cylinder head and inspect. Replace, if necessary.
MORE THAN 50% LEAKAGE FROM ADJACENT CYLINDERS	Head gasket leaks or crack in cylinder block or head between adjacent cylinders.	Remove cylinder head and inspect. Replace gasket or head, if necessary.
MORE THAN 25% LEAKAGE AND AIR ESCAPES THROUGH OIL FILLER CAP OPENING ONLY	Stuck or broken piston ring(s); cracked piston; worn rings and/or cylinder wall.	Inspect for broken ring(s) or piston. Measure ring gap and cylinder diameter, taper, and out-of-round. Replace affected part, if necessary.

J8909-78

SERVICE DIAGNOSIS—PERFORMANCE

CONDITION	POSSIBLE CAUSES	CORRECTION
ENGINE WILL NOT START	1. Weak battery. 2. Corroded or loose battery connections. 3. Faulty starter. 4. Moisture on ignition wires and distributor cap. 5. Faulty ignition cables. 6. Faulty coil or control unit. 7. Incorrect spark plug gap. 8. Incorrect ignition timing. 9. Dirt or water in fuel system. 10. Faulty fuel pump.	1. Test battery specific gravity. Charge or replace as necessary. 2. Clean and tighten battery connections. Apply a coat of light mineral grease to the terminals. 3. Refer to Group 8A, Battery/Starter/Charging System Diagnostics. 4. Wipe wires and cap clean and dry. 5. Replace any cracked or shorted cables. 6. Test and replace, if necessary (refer to Group 8D, Ignition System). 7. Set gap (refer to Group 8D, Ignition System). 8. Refer to Group 8D, Ignition System. 9. Clean system and replace fuel filter. 10. Install new fuel pump (refer to Group 14, Fuel System).
ENGINE STALLS OR ROUGH IDLE	1. Idle speed set too low. 2. Idle mixture too lean or too rich. 3. Leak in intake manifold. 4. Worn or burned distributor rotor. 5. Incorrect ignition wiring. 6. Faulty coil. 7. EGR valve leaking.	1. Refer to Group 14, Fuel System. 2. Refer to Group 14, Fuel System. 3. Inspect intake manifold gasket and vacuum hoses. Replace, if necessary (refer to Group 11, Exhaust System & Intake Manifold). 4. Install new distributor rotor. 5. Install correct wiring. 6. Test and replace, if necessary (refer to Group 8D, Ignition System). 7. Test and replace, if necessary (refer to Group 25, Emissions Control System).
ENGINE LOSS OF POWER	1. Incorrect ignition timing. 2. Worn or burned distributor rotor. 3. Worn distributor shaft. 4. Dirty or incorrectly gapped spark plugs. 5. Dirt or water in fuel system. 6. Faulty fuel pump. 7. Incorrect valve timing. 8. Blown cylinder head gasket. 9. Low compression. 10. Burned, warped or pitted valves. 11. Plugged or restricted exhaust system. 12. Faulty ignition cables. 13. Faulty coil.	1. Refer to Group 8D, Ignition System. 2. Install new distributor rotor. 3. Remove and repair distributor (refer to Group 8D, Ignition System). 4. Clean plugs and set gap (refer to Group 8D, Ignition System). 5. Clean system and replace fuel filter. 6. Install new fuel pump. 7. Correct valve timing. 8. Install new cylinder head gasket. 9. Test compression of each cylinder. 10. Install new valves. 11. Install new parts, as necessary. 12. Replace any cracked or shorted cables. 13. Test and replace, as necessary (refer to Group 8D, Ignition System).
ENGINE MISSES ON ACCELERATION	1. Dirty or gap set too wide in spark plug. 2. Incorrect ignition timing. 3. Dirt in fuel system. 4. Burned, warped or pitted valves. 5. Faulty coil.	1. Clean spark plugs and set gap (refer to Group 8D, Ignition System). 2. Refer to Group 8D, Ignition System. 3. Clean fuel system. 4. Install new valves. 5. Test and replace, if necessary, (refer to Group 8D, Ignition System).
ENGINE MISSES AT HIGH SPEED	1. Dirty or gap set too wide in spark plug. 2. Worn distributor shaft. 3. Worn or burned distributor rotor. 4. Faulty coil. 5. Incorrect ignition timing. 6. Dirty injector in throttle body. 7. Dirt or water in fuel system.	1. Clean spark plugs and set gap (refer to Group 8D, Ignition System). 2. Remove and repair distributor (refer to Group 8D, Ignition System). 3. Install new distributor rotor. 4. Test and replace, as necessary (refer to Group 8D, Ignition System). 5. Refer to Group 8D, Ignition System. 6. Clean injector. 7. Clean system and replace fuel filter.

J9209-7

SERVICE DIAGNOSIS—PERFORMANCE

CONDITION	POSSIBLE CAUSES	CORRECTION
ENGINE WILL NOT START	1. Weak battery. 2. Corroded or loose battery connections. 3. Faulty starter. 4. Moisture on ignition wires and distributor cap. 5. Faulty ignition cables. 6. Faulty coil or control unit. 7. Incorrect spark plug gap. 8. Incorrect ignition timing. 9. Dirt or water in fuel system. 10. Faulty fuel pump. 11. Faulty connectors for crankshaft or camshaft position sensors.	1. Test battery specific gravity. Charge or replace as necessary. 2. Clean and tighten battery connections. Apply a coat of light mineral grease to the terminals. 3. Refer to Group 8A, Battery/Starter/Charging System Diagnostics. 4. Wipe wires and cap clean and dry. 5. Replace any cracked or shorted cables. 6. Test and replace, if necessary (refer to Group 8D, Ignition System). 7. Set gap (refer to Group 8D, Ignition System). 8. Refer to Group 8D, Ignition System. 9. Clean system and replace fuel filter. 10. Install new fuel pump (refer to Group 14, Fuel System). 11. Rebuild or replace the connectors.
ENGINE STALLS OR ROUGH IDLE	1. Idle speed set too low. 2. Idle mixture too lean or too rich. 3. Leak in intake manifold. 4. Worn or burned distributor rotor. 5. Incorrect ignition wiring. 6. Faulty coil. 7. EGR valve leaking.	1. Refer to Group 14, Fuel System. 2. Refer to Group 14, Fuel System. 3. Inspect intake manifold gasket and vacuum hoses. Replace, if necessary (refer to Group 11, Exhaust System & Intake Manifold). 4. Install new distributor rotor. 5. Install correct wiring. 6. Test and replace, if necessary (refer to Group 8D, Ignition System). 7. Test and replace, if necessary (refer to Group 25, Emissions Control System).

J9409-91

SERVICE DIAGNOSIS—PERFORMANCE—CONT.

CONDITION	POSSIBLE CAUSES	CORRECTION
ENGINE LOSS OF POWER	1. Incorrect ignition timing. 2. Worn or burned distributor rotor. 3. Worn distributor shaft. 4. Dirty or incorrectly gapped spark plugs. 5. Dirt or water in fuel system. 6. Faulty fuel pump. 7. Incorrect valve timing. 8. Blown cylinder head gasket. 9. Low compression. 10. Burned, warped or pitted valves. 11. Plugged or restricted exhaust system. 12. Faulty ignition cables. 13. Faulty coil. 14. Faulty crankshaft or camshaft sensor.	1. Refer to Group 8D, Ignition System. 2. Install new distributor rotor. 3. Remove and repair distributor (refer to Group 8D, Ignition System). 4. Clean plugs and set gap (refer to Group 8D, Ignition System). 5. Clean system and replace fuel filter. 6. Install new fuel pump. 7. Correct valve timing. 8. Install new cylinder head gasket. 9. Test compression of each cylinder. 10. Install new valves. 11. Install new parts, as necessary. 12. Replace any cracked or shorted cables. 13. Test and replace, as necessary (refer to Group 8D, Ignition System). 14. Replace sensor.
ENGINE MISSES ON ACCELERATION	1. Dirty or gap set too wide in spark plug. 2. Incorrect ignition timing. 3. Dirt in fuel system. 4. Burned, warped or pitted valves. 5. Faulty coil.	1. Clean spark plugs and set gap (refer to Group 8D, Ignition System). 2. Refer to Group 8D, Ignition System. 3. Clean fuel system. 4. Install new valves. 5. Test and replace, if necessary, (refer to Group 8D, Ignition System).
ENGINE MISSES AT HIGH SPEED	1. Dirty or gap set too wide in spark plug. 2. Worn distributor shaft. 3. Worn or burned distributor rotor. 4. Faulty coil. 5. Incorrect ignition timing. 6. Dirty injector in throttle body. 7. Dirt or water in fuel system.	1. Clean spark plugs and set gap (refer to Group 8D, Ignition System). 2. Remove and repair distributor (refer to Group 8D, Ignition System). 3. Install new distributor rotor. 4. Test and replace, as necessary (refer to Group 8D, Ignition System). 5. Refer to Group 8D, Ignition System. 6. Clean injector. 7. Clean system and replace fuel filter.

J9409-92

SERVICE DIAGNOSIS—MECHANICAL

CONDITION	POSSIBLE CAUSES	CORRECTION
NOISY VALVES	1. High or low oil level in crankcase.	1. Check for correct oil level (refer to Group 0, Lubrication and Maintenance.
	2. Thin or diluted oil.	2. Change oil (refer to Group 0, Lubrication and Maintenance).
	3. Low oil pressure.	3. Check engine oil level.
	4. Dirt in tappets/lash adjusters.	4. Clean hydraulic tappets/hydraulic lash adjusters.
	5. Bent push rods.	5. Install new push rods.
	6. Worn rocker arms.	6. Inspect oil supply to rocker arms.
	7. Worn tappets/lash adjusters.	7. Install new hydraulic tappets/ hydraulic lash adjusters.
	8. Worn valve guides.	8. Ream and install new valves with oversize stems.
	9. Excessive runout of valve seats on valve faces.	9. Grind valve seats and valves.
CONNECTING ROD NOISE	1. Insufficient oil supply.	1. Check engine oil level (refer to Group 0, Lubrication and Maintenance).
	2. Low oil pressure.	2. Check engine oil level. Inspect oil pump relief valve and spring.
	3. Thin or diluted oil.	3. Change oil to correct viscosity.
	4. Excessive bearing clearance.	4. Measure bearings for correct clearance. Repair as necessary.
	5. Connecting rod journal out-of-round.	5. Replace crankshaft or grind journals.
	6. Misaligned connecting rods.	6. Replace bent connecting rods.
MAIN BEARING NOISE	1. Insufficient oil supply.	1. Check engine oil level (refer to Group 0, Lubrication and Maintenance).
	2. Low oil pressure.	2. Check engine oil level. Inspect oil pump relief valve and spring.
	3. Thin or diluted oil.	3. Change oil to correct viscosity.
	4. Excessive bearing clearance.	4. Measure bearings for correct clearance. Repair as necessary.
	5. Excessive end play.	5. Check No. 3 main bearing for wear on flanges.
	6. Crankshaft journal out-of-round, worn.	6. Grind journals or replace crankshaft.
	7. Loose flywheel or torque converter.	7. Tighten to correct torque.

SERVICE DIAGNOSIS—LUBRICATION

CONDITION	POSSIBLE CAUSES	CORRECTION
OIL LEAKS	1. Gaskets and O-Rings. (a) Misaligned, deteriorated or torn. (b) Loose fastener, broken or porous metal part. 2. Crankshaft Rear Seal (a) Misinstalled, inverted or torn lip (b) Torn, cut or shaved seal back bead. 3. Crankshaft Seal Flange. Scratched, nicked or grooved. 4. Cylinder block to Cap Mating Surface. (a) Inadequate Loctite sealant. (b) Oil hole burr. 5. Oil Pan to Rear Main Cap Sealant (Slots 3.9 - 5.2 only). (a) Inadequate or mislocated sealant. (b) Torn, cut or misinstalled oil pan. (c) Cracked or damaged oil pan flange. 6. Chain Case Cover Seal. (a) Misinstalled, cocked or misaligned. (b) Torn, cut or damaged seal lips. (c) Scratched or damaged seal casing or cover bore. (d) Scratched or damaged vibration damper hub.	1. (a) Replace the part. (b) Tighten, repair or replace the part. 2. (a) Replace the seal. (b) Replace the seal. 3. Replace or polish if necessary. 4. (a) Apply sealant per sealant per service manual. (b) Carefully stone or chamfer hole. 5. (a) Apply sealant per service manual procedures. (b) Replace the gasket. (c) Replace the oil pan. 6. (a) Replace per service manual procedures. (b) Replace the seal. (c) Replace the seal. (d) Minor damage can be polished out; otherwise replace the part.
OIL PRESSURE DROP	1. Low oil level. 2. Faulty oil pressure sending unit. 3. Low oil pressure. 4. Clogged oil filter. 5. Worn parts in oil pump. 6. Thin or diluted oil. 7. Excessive bearing clearance. 8. Oil pump relief valve stuck. 9. Oil pump suction tube loose; bent or cracked. 10. Oil pump cover warped or cracked.	1. Check engine oil level. 2. Install new sending unit. 3. Check sending unit and check main bearing oil clearance. 4. Install new oil filter. 5. Replace worn parts or pump. 6. Change oil to correct viscosity. 7. Measure bearings for correct clearance. 8. Remove valve and inspect, clean and install. 9. Remove oil pan and install new tube, if necessary. 10. Install new oil pump.
OIL PUMPING AT RINGS; SPARK PLUGS FOULING	1. Worn, scuffed or broken rings. 2. Carbon in oil ring slot. 3. Rings fitted too tightly in grooves. 4. Worn valve guides. 5. Leaking intake gasket (3.9L & 5.2L engines). 6. Leaking valve guide seals (3.9L & 5.2L engines). 7. Dislodged valve guide seals (3.9L & 5.2L engines).	1. Hone cylinder bores and install new rings. 2. Install new rings. 3. Remove the rings. Check grooves. If grooves are not proper width, replace piston. 4. Ream guides and replace valves with oversize valves and seals. 5. Replace gasket and tighten intake manifold to proper torque. 6. Replace seals. 7. Seat valve guide seals or replace, as needed. J9509-61

2.5L ENGINE SERVICE PROCEDURES

INDEX

	page		page
Camshaft	32	Oil Pan	36
Camshaft Pin Replacement	34	Rocker Arms and Push Rods	23
Engine Assembly—XJ Vehicles	18	Timing Case Cover	31
Engine Assembly—YJ Vehicles	20	Timing Case Cover Oil Seal Replacement	30
Engine Cylinder Head	25	Timing Chain and Sprockets	31
Engine Cylinder Head Cover	22	Valve Component Replace—Cylinder Head Not Removed	23
Engine Damper	17	Valve Springs and Oil Seals	23
Engine Mount—Rear	16	Valve Timing	30
Engine Mounts—Front	14	Valves and Valve Springs	27
General Information	13	Vibration Damper	30
Hydraulic Tappets	24		

GENERAL INFORMATION

The 2.5 liter (150 CID) four-cylinder engine is an In-line, lightweight, overhead valve engine (Fig. 1).

Engine Type	In-line 4 Cylinder
Bore and Stroke	98.4 × 81.0 mm (3.88 × 3.19 in.)
Displacement	2.5L (150 cu. in.)
Compression Ratio	9.1:1
Torque	
(XJ Vehicles)	202 N·m (149 ft. lbs.) @ 3250 rpm
(YJ Vehicles)	189 N·m (139 ft. lbs.) @ 3250 rpm
Firing Order	1–3–4–2
Lubrication	Pressure Feed—Full Flow Filtration
Engine Oil Capacity	3.8L (4 Quarts)
Cooling System	Liquid Cooled—Forced Circulation
Cooling System Capacity	
(XJ Vehicles)	9.5L (10 Quarts)
(YJ Vehicles)	8.5L (9 Quarts)
Cylinder Block	Cast Iron
Crankshaft	Cast Nodular Iron
Cylinder Head	Cast Nodular Iron
Camshaft	Cast Nodular Iron
Pistons	Aluminum Alloy (with Struts)
Pistons Combustion Cavity	Double Quench
Connecting Rods	Cast Nodular Iron

J9409-19

Fig. 1 Engine Description

This engine is designed for unleaded fuel.

The engine cylinder head has dual quench-type combustion chambers that create turbulence and fast burning of the air/fuel mixture. This results in good fuel economy.

The cylinders are numbered 1 through 4 from front to rear. The firing order is 1-3-4-2 (Fig. 2).

The crankshaft rotation is clockwise, when viewed from the front of the engine. The crankshaft rotates within five main bearings and the camshaft rotates within four bearings.

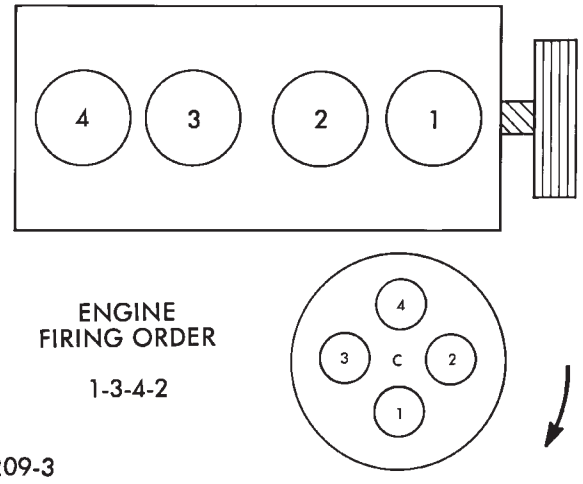

Fig. 2 Engine Firing Order

BUILD DATE CODE

The engine Build Date Code is located on a machined surface on the right side of the cylinder block between the No.3 and No.4 cylinders (Fig. 3).

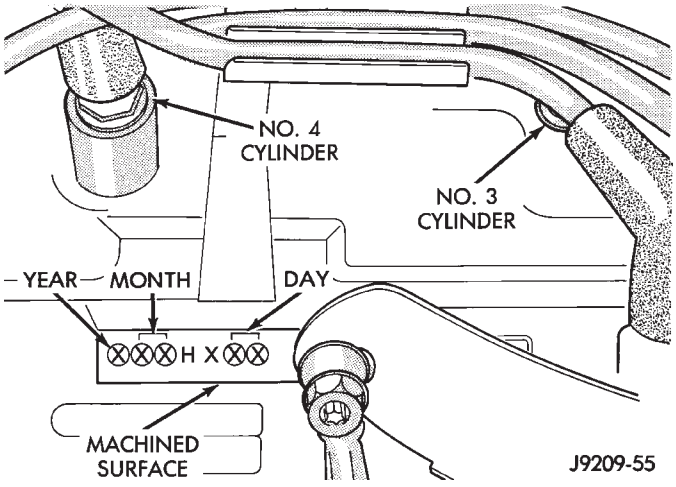

Fig. 3 Build Date Code Location

The digits of the code identify:

(1) 1st Digit—The year (4 = 1994).

(2) 2nd & 3rd Digits—The month (01 - 12).

(3) 4th & 5th Digits—The engine type/fuel system/compression ratio (HX = A 2.5 liter (150 CID) 9.1:1 compression ratio engine with a multi-point fuel injection system).

(4) 6th & 7th Digits—The day of engine build (01 - 31).

FOR EXAMPLE: Code * 401HX23 * identifies a 2.5 liter (150 CID) engine with a multi-point fuel injection system, 9.1:1 compression ratio and built on January 23, 1994.

OVERSIZE AND UNDERSIZE COMPONENT CODES

Some engines may be built with oversize or undersize components such as:

- Oversize cylinder bores.
- Oversize camshaft bearing bores.
- Undersize crankshaft main bearing journals.
- Undersize connecting rod journals.

These engines are identified by a letter code (Fig. 4) stamped on the oil filter boss near the distributor (Fig. 5).

CODE	COMPONENT	UNDERSIZE
P	One or more connecting rod bearing journals	0.254 mm (0.010 in)
M	All crankshaft main bearing journals	0.254 mm (0.010 in)
PM	All crankshaft main bearing journals and one or more connecting rod journals	0.254 mm (0.010 in)
CODE	**COMPONENT**	**OVERSIZE**
B	All cylinder bores	0.254 mm (0.010 in)
C	All camshaft bearing bores	0.254 mm (0.010 in)

J8909-54

Fig. 4 Oversize and Undersize Component Codes

ENGINE MOUNTS—FRONT

The front mounts support the engine at each side. These supports are made of resilient rubber.

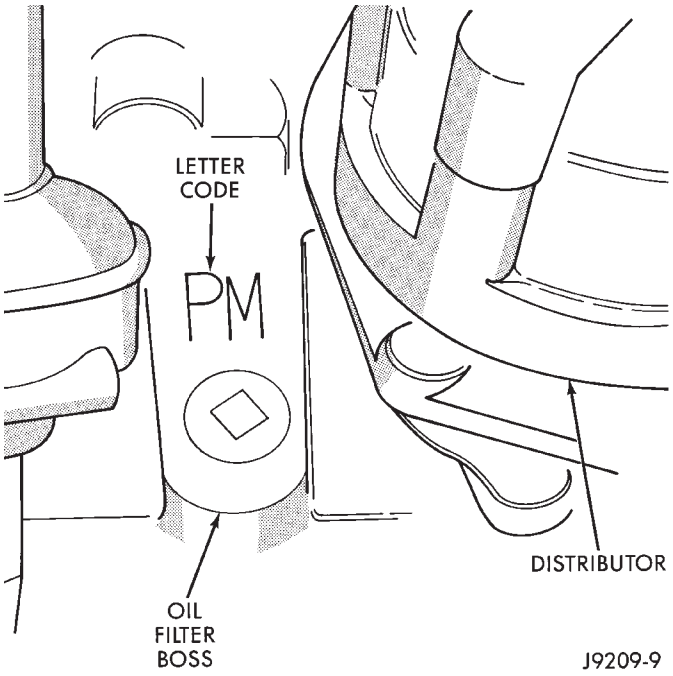

Fig. 5 Oversize and Undersize Component Code Location

REMOVAL—XJ VEHICLES

(1) Disconnect negative cable from battery.

(2) Raise the vehicle.

(3) Support the engine.

(4) Remove through bolt nut (Fig. 6). DO NOT remove the through bolt.

(5) Remove the retaining bolts and nuts from the support cushions (Fig. 6).

(6) Remove the through bolt.

(7) Remove the support cushions.

INSTALLATION—XJ VEHICLES

(1) If the engine support bracket was removed, position the LEFT bracket (Fig. 6) and the RIGHT bracket with generator brace (Fig. 7) onto the cylinder block. Install the bolts and stud nuts.

(a) RIGHT SIDE (Fig. 7)—Tighten the bolts to 61 N·m (45 ft. lbs.) torque. Tighten the stud nuts to 46 N·m (34 ft. lbs.) torque.

(b) LEFT SIDE (Fig. 6)—Tighten the bolts to 61 N·m (45 ft. lbs.) torque.

(2) If the support cushion brackets were removed, position the brackets onto the lower front sill (Figs. 6 and 8). Install the bolts and stud nuts. Tighten the bolts to 54 N·m (40 ft. lbs.) torque and the stud nuts to 41 N·m (30 ft. lbs.) torque.

(3) Place the support cushions onto the support cushion brackets (Fig. 6). Tighten the right support cushion nuts to 65 N·m (48 ft. lbs.) torque. Tighten the left support cushion bolt and nut to 41 N·m (30 ft. lbs.) torque.

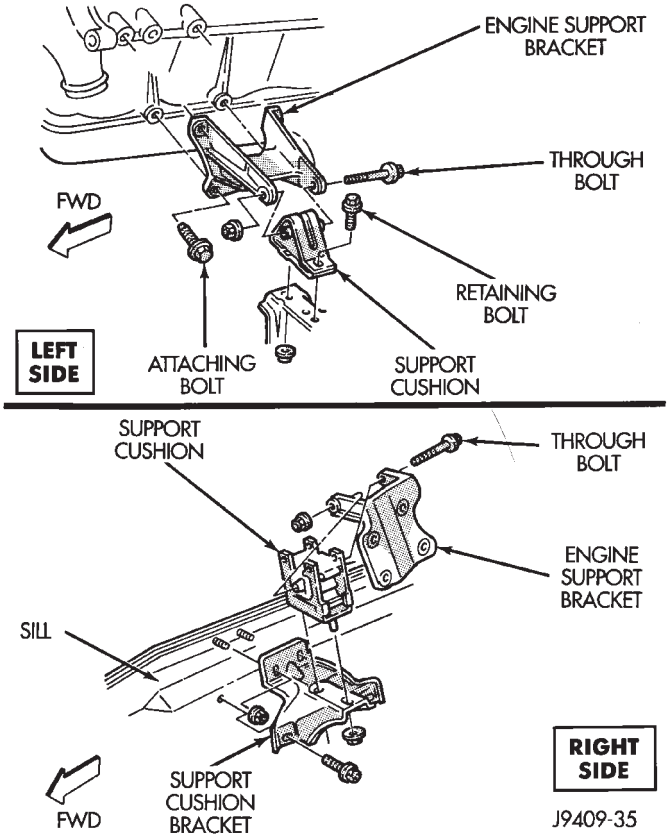

Fig. 6 Front Mounts—XJ Vehicles

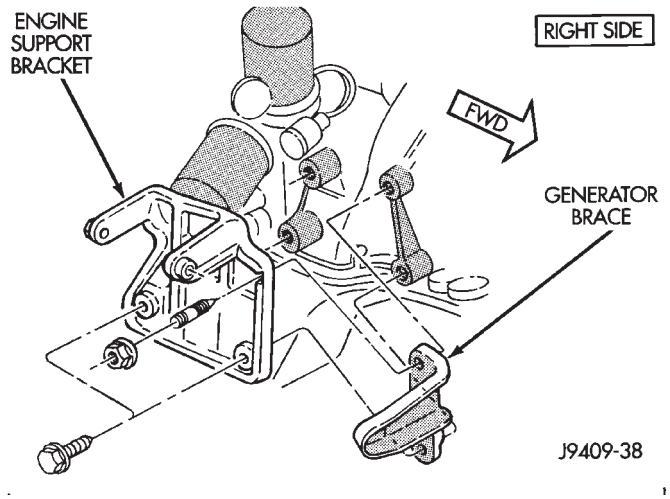

Fig. 7 Engine Support Bracket—Right Side

(4) Install the through bolt and the retaining nut (Fig. 6). Tighten the through bolt nut to 65 N·m (48 ft. lbs.) torque.

(5) Remove the engine support.

(6) Lower the vehicle.

(7) Connect negative cable to battery.

REMOVAL—YJ VEHICLES

(1) Disconnect negative cable from battery.

(2) Raise the vehicle.

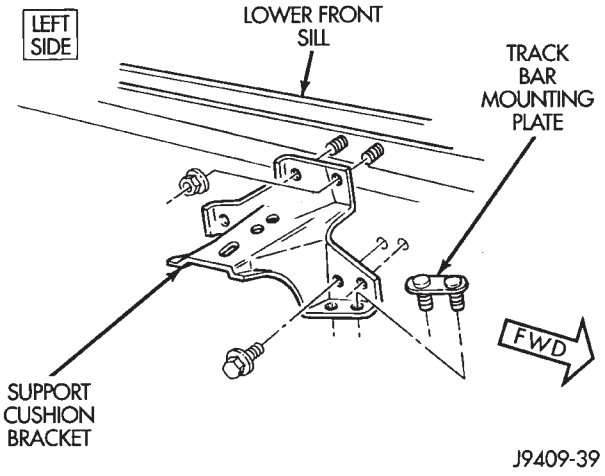

Fig. 8 Support Cushion Bracket—Left Side

(3) Support the engine.

(4) Remove through bolt nut (Fig. 9). DO NOT remove the through bolt.

(5) Remove the retaining bolts and nuts from the support cushions (Fig. 9).

(6) Remove the through bolt.

(7) Remove the engine support cushions.

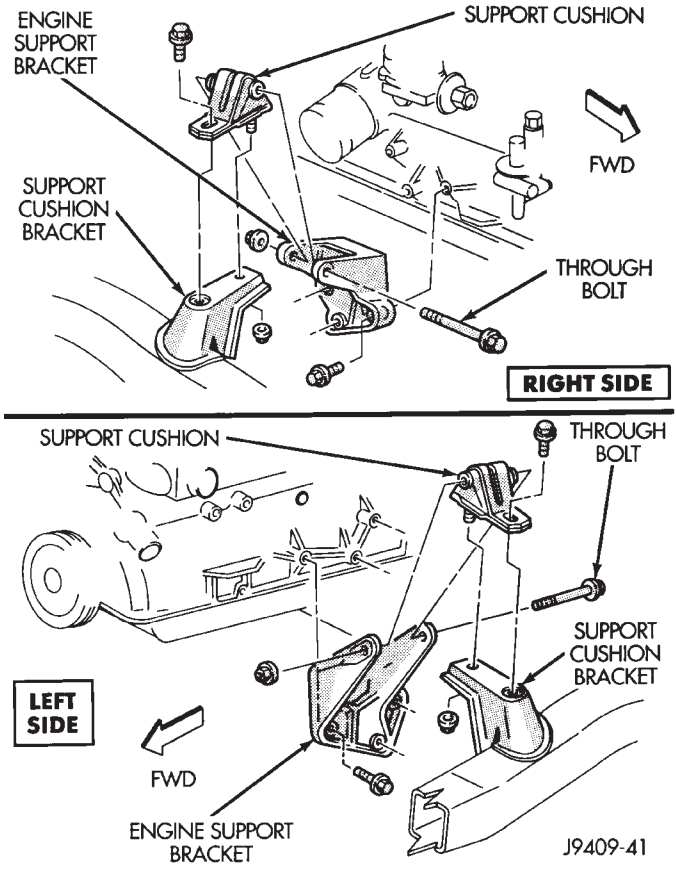

Fig. 9 Front Mounts—YJ Vehicles

INSTALLATION—YJ VEHICLES

(1) If the engine support bracket was removed, position the bracket onto the block and install the attaching bolts (Fig. 9). Tighten the bolts to 62 N·m (46 ft. lbs.) torque.

(2) Place the support cushion on the support cushion bracket (Fig. 9). Install the support cushion retaining bolts and nuts. Tighten the bolts and nuts to 52 N·m (38 ft. lbs.) torque.

(3) Install the through bolt and the retaining nut (Fig. 9). Tighten the through bolt nut to 69 N·m (51 ft. lbs.) torque.

(4) Remove the engine support.

(5) Lower the vehicle.

(6) Connect negative cable to battery.

ENGINE MOUNT—REAR

A resilient rubber cushion supports the transmission at the rear between the transmission extension housing and the rear support crossmember or skid plate.

REMOVAL—XJ VEHICLES

(1) Disconnect negative cable from battery.

(2) Raise the vehicle and support the transmission.

(3) Remove the nuts holding the support cushion to the crossmember (Figs. 10 and 11). Remove the crossmember.

(4) **MANUAL TRANSMISSION:**

(a) Remove the support cushion nuts and remove the cushion.

(b) If necessary, remove the bolts holding the transmission support bracket to the transmission (Fig. 10). Remove the bracket.

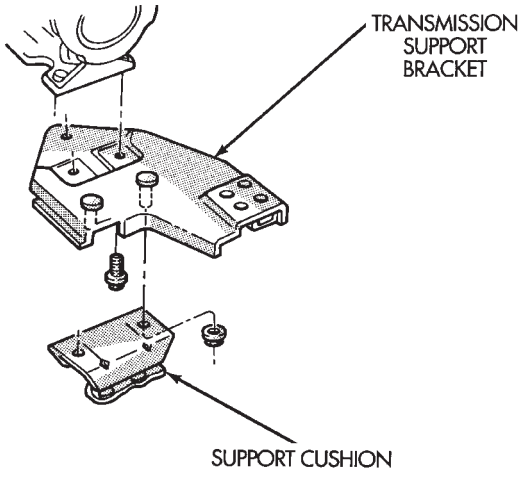

Fig. 10 Rear Mount—XJ Vehicles (Manual Transmission)

(5) **AUTOMATIC TRANSMISSION:**

(a) Remove the support cushion bolts and remove the cushion and the transmission support bracket.

(b) If necessary on 2WD vehicles, remove the bolts holding the transmission support adaptor bracket to the transmission (Fig. 11). Remove the adaptor bracket.

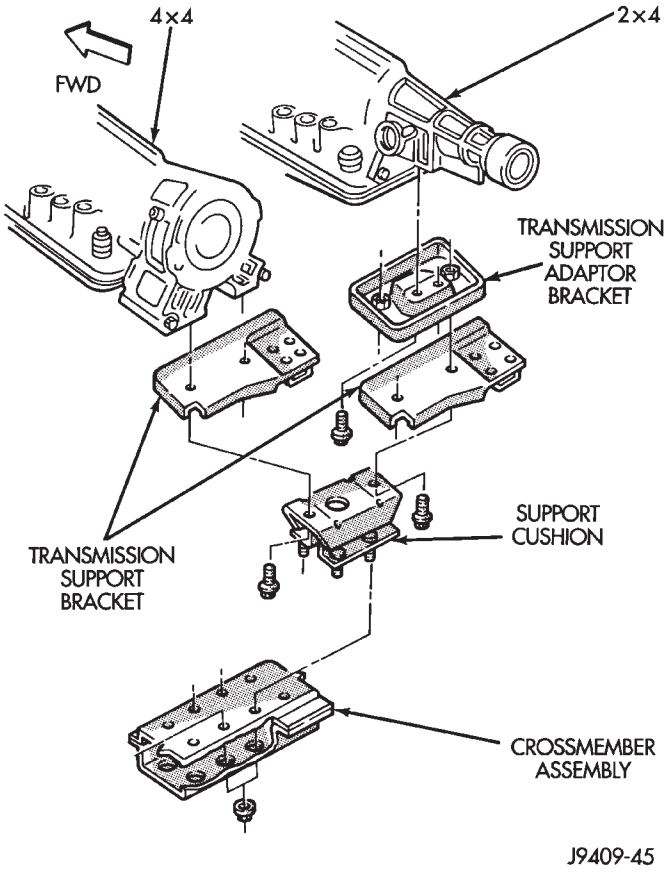

Fig. 11 Rear Mount—XJ Vehicles (Automatic Transmission)

INSTALLATION—XJ VEHICLES

(1) **MANUAL TRANSMISSION:**

(a) If removed, position the transmission support bracket to the transmission and install the bolts. Tighten the bolts to 43 N·m (32 ft. lbs.) torque.

(b) Position the support cushion onto the transmission support bracket. Install and tighten the nuts to 46 N·m (34 ft. lbs.) torque.

(2) **AUTOMATIC TRANSMISSION:**

(a) If removed, position the transmission support adaptor bracket (2WD vehicles) to the transmission and install the bolts. Tighten the bolts to 75 N·m (55 ft. lbs.) torque.

(b) Position the transmission support bracket and support cushion to the transmission and install the bolts. Tighten the bolts to 75 N·m (55 ft. lbs.) torque.

(3) Position the crossmember onto the support cushion studs and install the nuts. Tighten the nuts to 22 N·m (192 in. lbs.) torque.

(4) Install the crossmember to sill bolts and tighten to 41 N·m (30 ft. lbs.) torque.

(5) Remove the transmission support.
(6) Lower the vehicle.
(7) Connect negative cable to battery.

REMOVAL—YJ VEHICLES

(1) Disconnect negative cable from battery.
(2) Raise the vehicle and support the transmission.
(3) Remove the nuts holding the support cushion to the skid plate (Figs. 12 and 13).
(4) Remove the skid plate bolts and the skid plate.
(5) **MANUAL TRANSMISSION:**
(a) Remove the bolts holding the support cushion and torque arm bracket to the transmission (Fig. 12).
(b) Remove the support cushion and torque arm bracket.

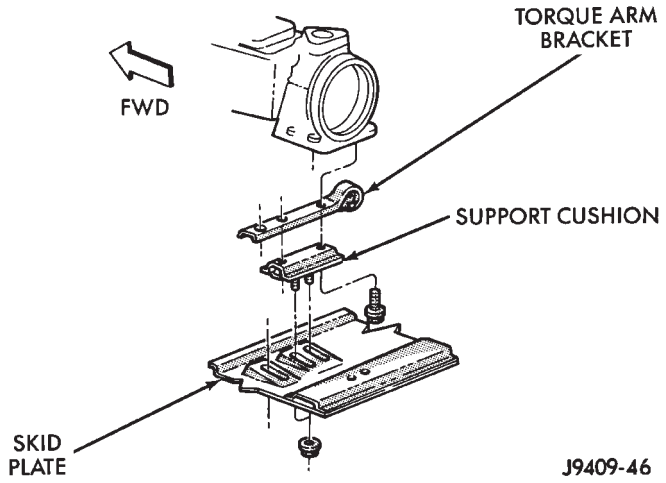

Fig. 12 Rear Mount—YJ Vehicles (Manual Transmission)

(6) **AUTOMATIC TRANSMISSION:**
(a) Remove the bolts and nuts holding the support cushion to the torque arm bracket (Fig 13). Remove the support cushion.
(b) Remove the bolts holding the torque arm bracket to the transmission (Fig. 13). Remove the torque arm bracket.

INSTALLATION—YJ VEHICLES

(1) **MANUAL TRANSMISSION:**
(a) Position the torque arm bracket and support cushion to the transmission and install the bolts (Fig. 12).
(b) Tighten the bolts to 54 N·m (40 ft. lbs.) torque.
(2) **AUTOMATIC TRANSMISSION:**
(a) Position the torque arm bracket to the transmission and install the bolts. Tighten the bolts to 54 N·m (40 ft. lbs.) torque.
(b) Position the support cushion to the torque arm bracket and install the bolts and nuts. Tighten the nuts to 54 N·m (40 ft. lbs.) torque.

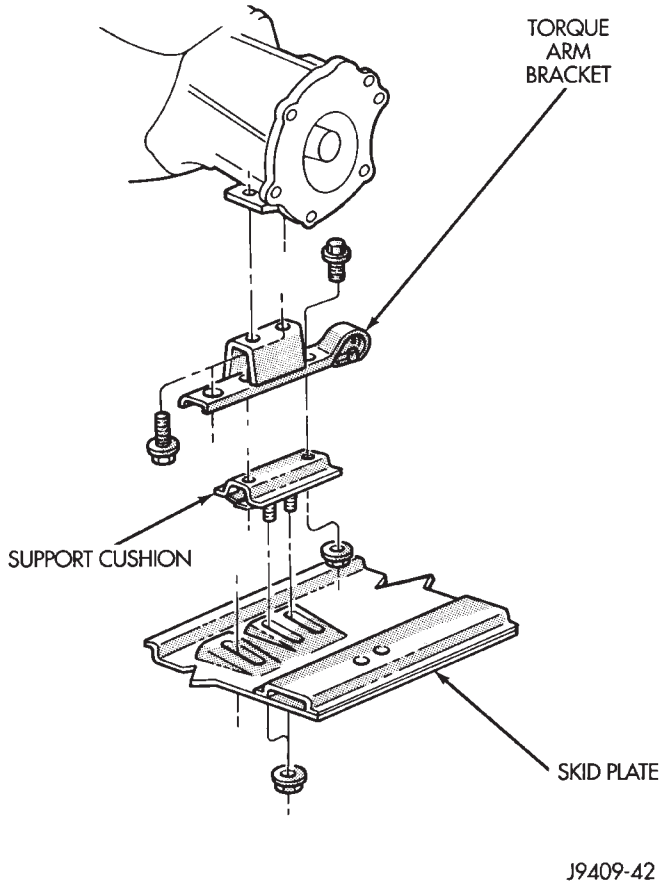

Fig. 13 Rear Mount—YJ Vehicles (Automatic Transmission)

(3) Position the skid plate to the studs of the support cushion and install the nuts (Figs. 12 and 13). Tighten the stud nuts to 54 N·m (40 ft. lbs.) torque.
(4) Install the skid plate bolts to the sill and tighten to 88 N·m (65 ft. lbs.) torque.
(5) Remove the transmission support.
(6) Lower the vehicle.
(7) Connect negative cable to battery.

ENGINE DAMPER

REMOVAL

(1) Disconnect negative cable from battery.
(2) Remove the top and bottom damper nuts (Fig. 14).
(3) Remove the outer retainers and bushings (Fig. 14).
(4) Remove the top damper bracket nut and bolts (Fig. 14).
(5) Remove the bracket, inner retainers, bushings and the damper (Fig. 14).

INSTALLATION

(1) Install the damper on the lower bracket with the lower inner retainer and bushing in place.

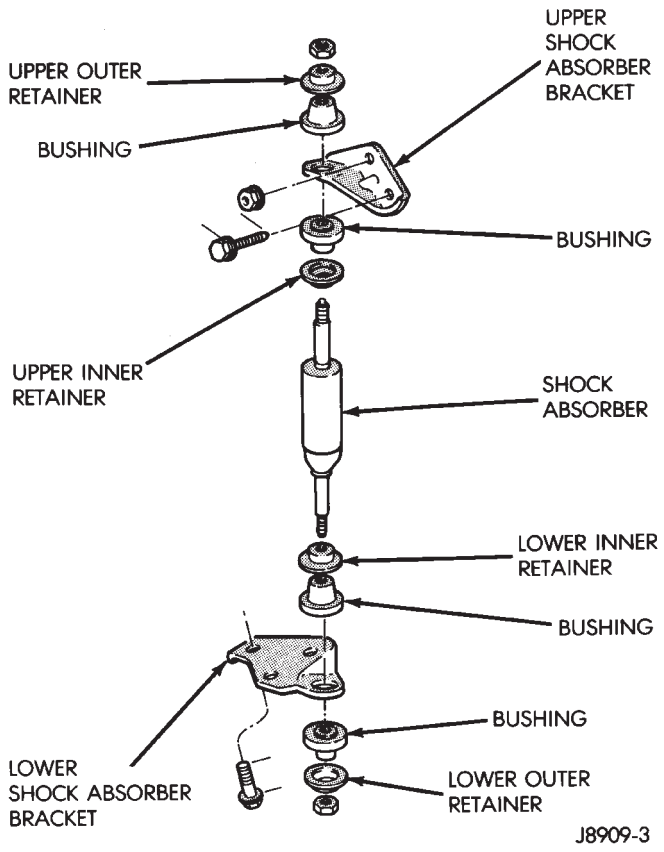

Fig. 14 Engine Damper

(2) Install the upper inner retainer and bushing on the top of the damper.

(3) Position the upper damper bracket over the damper and install the stud nut and bolts.

(4) Tighten the stud nut to 23 N·m (17 ft. lbs.) torque. Tighten the bracket bolts to 61 N·m (45 ft. lbs.) torque.

(5) Install the bushing, upper outer retainer and damper nut.

(6) Install the bushing, lower outer retainer and damper nut.

(7) Tighten the upper and lower damper nuts.

(8) Connect negative cable to battery.

ENGINE ASSEMBLY—XJ VEHICLES

REMOVAL

(1) Disconnect the battery cables. Remove the battery.

(2) Mark the hinge locations on the hood panel for alignment reference during installation. Remove the engine compartment lamp. Remove the hood.

WARNING: THE COOLANT IN A RECENTLY OPERATED ENGINE IS HOT AND PRESSURIZED. USE CARE TO PREVENT SCALDING BY HOT COOLANT. CAREFULLY RELEASE THE PRESSURE BEFORE REMOVING THE RADIATOR DRAIN COCK AND CAP.

(3) Remove the radiator drain cock and radiator cap to drain the coolant. DO NOT waste usable coolant. If the solution is clean, drain the coolant into a clean container for reuse.

(4) Remove the lower radiator hose.

(5) Remove the upper radiator hose and coolant recovery hose (Fig. 15).

(6) Remove the fan shroud (Fig. 15).

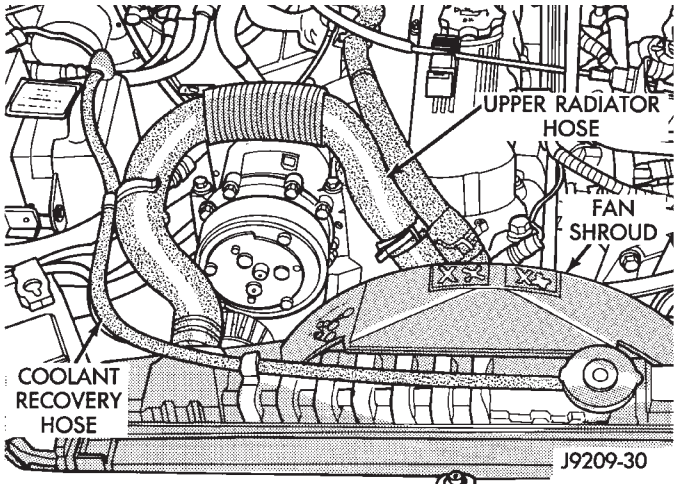

Fig. 15 Upper Radiator Hose, Coolant Recovery Hose & Fan Shroud

(7) Disconnect the transmission fluid cooler tubing (automatic transmission).

(8) Remove the radiator/condenser (if equipped with air conditioning).

(9) Remove fan assembly and install a 5/16 x 1/2-inch SAE capscrew through fan pulley into water pump flange. This will maintain the pulley and water pump in alignment when crankshaft is rotated.

(10) Disconnect the heater hoses (Figs. 16 and 17).

(11) Disconnect the throttle linkages (Fig. 16), speed control cable (if equipped) and throttle valve rod.

(12) Disconnect the oxygen sensor wire connector.

(13) Disconnect the wires from the starter motor solenoid.

(14) Disconnect all fuel injection harness connections.

(15) Disconnect the quick-connect fuel lines at the fuel rail and return line by squeezing the two retaining tabs against the fuel tube (Fig. 16). Pull the fuel tube and retainer from the quick-connect fitting (refer to Group 14, Fuel System for the proper procedure).

(16) Remove the fuel line bracket from the intake manifold.

(17) Remove the air cleaner assembly (Fig. 18).

(18) If equipped with air conditioning, remove the service valves and cap the compressor ports.

(19) Remove the power brake vacuum check valve from the booster, if equipped.

(20) If equipped with power steering (Fig. 18):

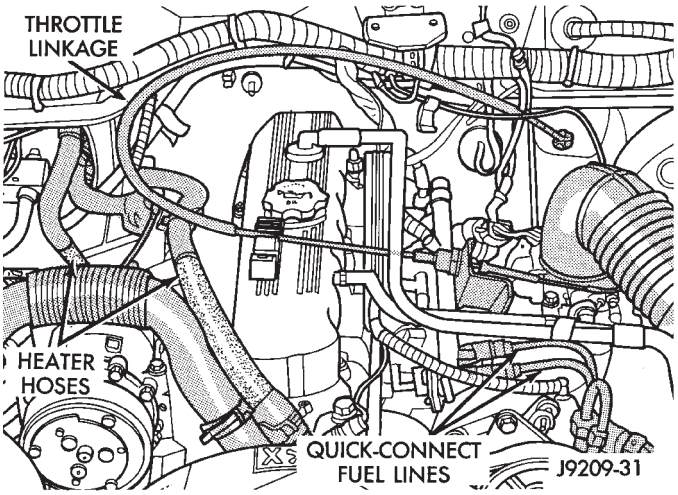

Fig. 16 Heater Hoses (LH Drive Vehicles), Throttle Linkage & Quick-Connect Fuel Lines

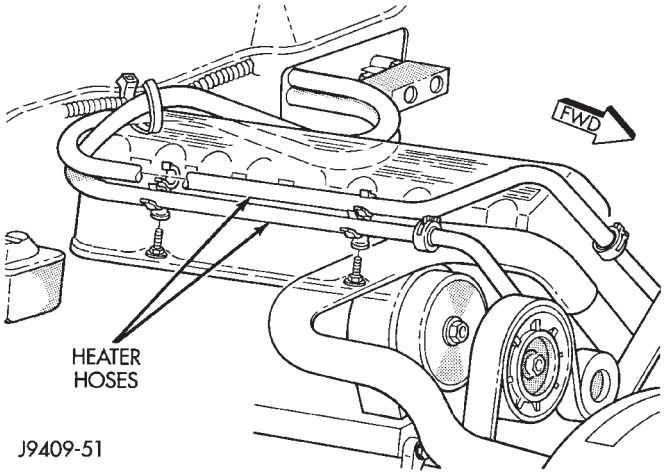

Fig. 17 Heater Hoses (RH Drive Vehicle)

(a) Disconnect the power steering hoses from the fittings at the steering gear.

(b) Drain the pump reservoir.

(c) Cap the fittings on the hoses and steering gear to prevent foreign material from entering the system.

(21) Disconnect the coolant hoses from the rear of the intake manifold.

(22) Identify, tag and disconnect all necessary wire connectors and vacuum hoses.

(23) Raise the vehicle.

(24) Remove the oil filter.

(25) Remove the starter motor.

(26) Disconnect the exhaust pipe from the exhaust manifold.

(27) Remove the flywheel and converter housing access cover.

(28) If equipped with an automatic transmission, mark the converter and drive plate location in reference to each other and remove the converter-to-drive plate bolts.

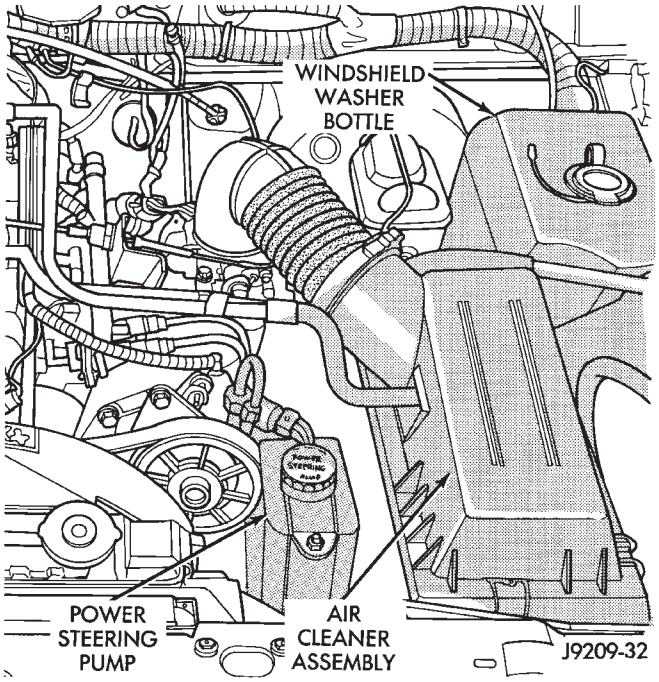

Fig. 18 Air Cleaner and Power Steering Pump

(29) Remove the upper flywheel and converter housing bolts and loosen the bottom bolts.

(30) Remove the engine support cushion-to-engine compartment bracket bolts.

(31) Remove the engine shock damper bracket from the sill.

(32) Lower the vehicle.

(33) Attach a lifting device to the engine.

(34) Raise the engine slightly off the front supports.

(35) Place a support stand under the converter or flywheel housing.

(36) Remove the remaining bottom converter or flywheel housing bolts.

(37) Lift the engine out of the engine compartment and install on an engine stand.

(38) Install the oil filter to keep foreign material out of the engine.

INSTALLATION

(1) Remove the oil filter.

(2) Lift the engine off the stand and lower it into the engine compartment. For easier installation, it may be useful to remove the engine support cushions from the engine support brackets as an aide for alignment of the engine-to-transmission.

(3) If equipped with a manual transmission:

(a) Insert the transmission shaft into the clutch spline.

(b) Align the flywheel housing with the engine.

(c) Install and tighten the flywheel housing lower bolts finger tight.

(4) If equipped with an automatic transmission:

(a) Align the transmission torque converter housing with the engine.

(b) Loosely install the converter housing lower bolts and install the next higher bolt and nut on each side.

(c) Tighten all 4 bolts finger-tight.

(5) Install the engine support cushions (if removed).

(6) Lower the engine and engine support cushions onto the engine compartment brackets.

(7) Remove the engine lifting device.

(8) Raise the vehicle.

(9) If equipped with an automatic transmission:

(a) Install the converter-to-drive plate bolts. Ensure the installation reference marks are aligned. Tighten the bolts to 54 N·m (40 ft. lbs.) torque.

(b) Install the converter-housing access cover.

(c) Install the exhaust pipe support.

(10) Install the remaining converter or flywheel housing bolts.

(11) Install the starter motor and connect the cable. Tighten the bolts to 45 N·m (33 ft. lbs.) torque.

(12) Tighten the engine support cushing through-bolt nuts.

(13) Install the remaining flywheel and converter housing bolts. Tighten the bolts to 38 N·m (28 ft. lbs.) torque.

(14) Connect the exhaust pipe to the manifold.

(15) Install the oil filter.

(16) Lower the vehicle.

(17) Connect the coolant hoses and tighten the clamps.

(18) If equipped with power steering:

(a) Remove the protective caps

(b) Connect the hoses to the fittings at the steering gear. Tighten the nut to 52 N·m (38 ft. lbs.) torque.

(c) Fill the pump reservoir with fluid.

(19) Remove the pulley-to-water pump flange alignment capscrew and install the fan and spacer or Tempatrol fan assembly.

(20) Install the fan shroud and radiator and condenser (if equipped with air conditioning).

(21) Connect the radiator hoses.

(22) Connect the automatic transmission fluid cooler pipes, if equipped.

(23) Connect the oxygen sensor wire connector.

(24) Connect the throttle valve rod and retainer. Connect the throttle cable and install the rod. Install the throttle valve rod spring.

(25) Connect the speed control cable, if equipped.

(26) Connect the fuel supply and return lines to the throttle body.

(27) Connect all the vacuum hoses and wire connectors.

(28) Connect the service valves to the A/C compressor ports, if equipped with air conditioning.

(29) Fill the power steering reservoir.

(30) Connect the battery cables.

(31) Install the hood.

(32) Install the air cleaner.

(33) Start the engine and inspect for leaks.

(34) Fill the cooling system.

(35) Stop the engine and check the fluid levels. Add fluid, as required.

ENGINE ASSEMBLY—YJ VEHICLES

REMOVAL

(1) Place a protective cloth over the windshield frame. Raise the hood and rest it on the windshield frame (Fig. 19).

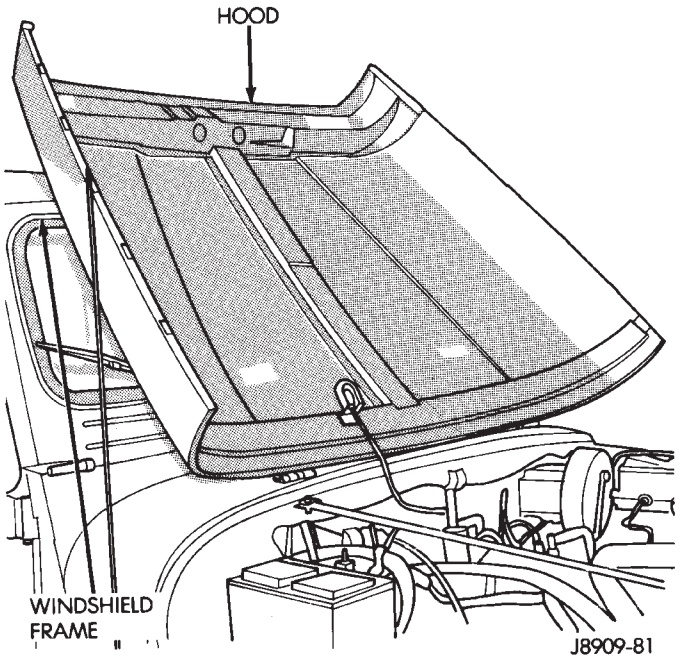

Fig. 19 Hood on Windshield Frame

(2) Disconnect the battery cable clamps and remove the battery.

WARNING: THE COOLANT IN A RECENTLY OPERATED ENGINE IS HOT AND PRESSURIZED. USE CARE TO PREVENT SCALDING BY HOT COOLANT. CAREFULLY RELEASE THE PRESSURE BEFORE REMOVING THE RADIATOR DRAIN COCK AND CAP.

(3) Remove the radiator drain cock and radiator cap to drain the coolant. DO NOT waste usable coolant. If the solution is clean, drain the coolant into a clean container for reuse.

(4) Disconnect the wire connectors from the generator.

(5) Disconnect the ignition coil and distributor wire connectors.

(6) Disconnect the oil pressure sender wire connector.

(7) Disconnect the wires at the starter motor solenoid and injection wire harness connector.

(8) Disconnect the quick-connect fuel lines at the fuel rail and return line by squeezing the two retaining tabs against the fuel tube (Fig. 20). Pull the fuel tube and retainer from the quick-connect fitting (refer to Group 14, Fuel System for the proper procedure).

(9) Remove the fuel line bracket from the intake manifold.

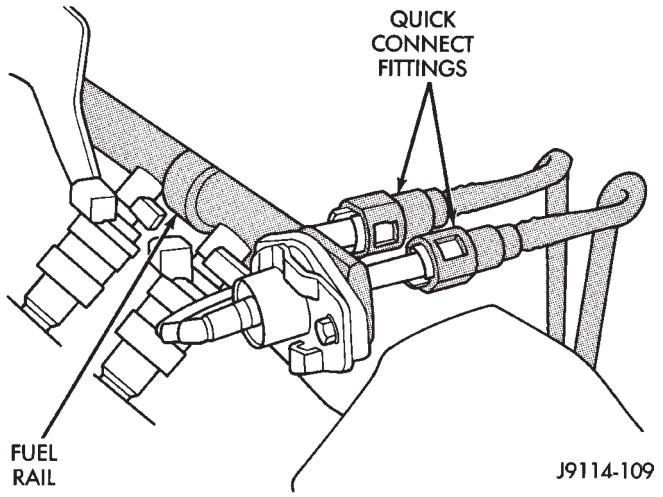

Fig. 20 Fuel Line Quick-Connect Couplings

(10) Disconnect the engine ground strap.

(11) Remove the air cleaner assembly.

(12) Disconnect the vacuum purge hose at the fuel vapor canister tee.

(13) Disconnect the idle speed actuator wire connector.

(14) Disconnect the throttle cable and remove it from the bracket.

(15) Disconnect the throttle rod at the bellcrank.

(16) Disconnect the speed control cable, if equipped.

(17) Disconnect the oxygen sensor wire connector.

(18) Disconnect the upper and lower radiator hoses at the radiator.

(19) Disconnect the coolant hoses from the rear of the intake manifold and thermostat housing.

(20) Disconnect the heater hoses.

(21) Remove the fan shroud screws.

(22) Remove the radiator attaching bolts.

(23) Remove the radiator and fan shroud.

(24) Remove the fan and spacer or Tempatrol fan assembly.

(25) Install a 5/16 X 1/2-inch SAE capscrew through fan pulley into water pump flange. This will maintain the pulley and water pump in alignment when crankshaft is rotated.

(26) Remove the power brake vacuum check valve from the booster, if equipped.

(27) If equipped with power steering:

(a) Disconnect the hoses from the fittings at the steering gear.

(b) Drain the pump reservoir.

(c) Cap the fittings on the hoses and steering gear to prevent foreign objects from entering the system.

(28) Lift the vehicle and support it with support stands.

(29) Remove the oil filter.

(30) Remove the starter motor.

(31) Remove the flywheel housing access cover.

(32) Remove the engine support cushion-to-bracket through bolts.

(33) Disconnect the exhaust pipe from the manifold.

(34) Remove the upper flywheel housing bolts and loosen the bottom bolts.

(35) Remove the engine shock damper bracket from the sill.

(36) Lower the vehicle.

(37) Attach a lifting device to the engine.

(38) Raise the engine off the front supports.

(39) Place a support stand under the flywheel housing.

(40) Remove the remaining flywheel housing bolts.

(41) Lift the engine out of the engine compartment and install on an engine stand.

(42) Install the oil filter to keep foreign material out of the engine.

INSTALLATION

(1) Remove the oil filter.

(2) Lift the engine off the stand and lower it into the engine compartment. For easier installation, it may be useful to remove the engine support cushions from the engine support brackets as an aide for alignment of the engine-to-transmission.

(3) Insert the transmission shaft into the clutch spline.

(4) Align the flywheel housing with the engine.

(5) Install and finger tighten the flywheel housing lower bolts.

(6) Install the engine support cushions (if removed).

(7) Remove the support stand from beneath the flywheel housing.

(8) Lower the engine and engine support cushions onto the engine compartment brackets. Ensure that the bolt holes are aligned. Install the bolts and tighten.

(9) Remove the engine lifting device.

(10) Raise the vehicle.

(11) Attach the engine shock damper bracket to the sill.

(12) Attach the exhaust pipe to the manifold. Install and tighten the nuts to 31 N·m (23 ft. lbs.) torque.

(13) Install the flywheel housing access cover.

(14) Install the remaining flywheel housing bolts. Tighten the bolts to 38 N·m (28 ft. lbs.) torque.

(15) Install the starter motor and connect the cable. Tighten the bolts to 45 N·m (33 ft. lbs.) torque.

(16) Install the oil filter.

(17) Lower the vehicle.

(18) Connect the coolant hoses and tighten the clamps.

(19) If equipped with power steering:

(a) Remove the protective caps

(b) Connect the hoses to the fittings at the steering gear. Tighten the nut to 52 N·m (38 ft. lbs.) torque.

(c) Fill the pump reservoir with fluid.

(20) Remove the pulley-to-water pump flange alignment capscrew and install the fan and spacer or Tempatrol fan assembly.

(21) Tighten the serpentine drive belt according to the specifications listed in Group 7, Cooling System.

(22) Install the fan shroud and radiator.

(23) Connect the radiator hoses.

(24) Connect the heater hoses.

(25) Connect the throttle valve rod and retainer.

(26) Connect the throttle cable and install the rod.

(27) Install the throttle valve rod spring.

(28) Connect the speed control cable, if equipped.

(29) Connect the oxygen sensor wire connector.

(30) Install the vacuum hose and check valve on the brake booster.

(31) Connect the coolant temperature sensor wire connector.

(32) Connect the idle speed actuator wire connector.

(33) Connect the fuel inlet and return hoses at the fuel rail. Verify that the quick-connect fitting assembly fits securely over the fuel lines by giving the fuel lines a firm tug.

(34) Install the fuel line bracket to the intake manifold.

(35) Connect all fuel injection wire connections.

(36) Install the engine ground strap.

(37) Connect the ignition coil wire connector.

(38) Remove the coolant temperature sending unit to permit air to escape from the block. Fill the cooling system with coolant. Install the coolant temperature sending unit when the system is filled.

(39) Install the battery and connect the battery cables.

(40) Install the air cleaner bonnet to the throttle body.

(41) Install the air cleaner.

(42) Lower the hood and secure in place.

(43) Start the engine and inspect for leaks.

(44) Stop the engine and check the fluid levels. Add fluid, as required.

ENGINE CYLINDER HEAD COVER

A cured gasket is part of the engine cylinder head cover.

REMOVAL

(1) Disconnect negative cable from battery.

(2) Disconnect the Crankcase Ventilation (CCV) vacuum hose from engine cylinder head cover (Fig. 1).

(3) Disconnect the fresh air inlet hose from the engine cylinder head cover (Fig. 1).

(4) Remove the engine cylinder head cover mounting bolts.

(5) Remove the engine cylinder head cover.

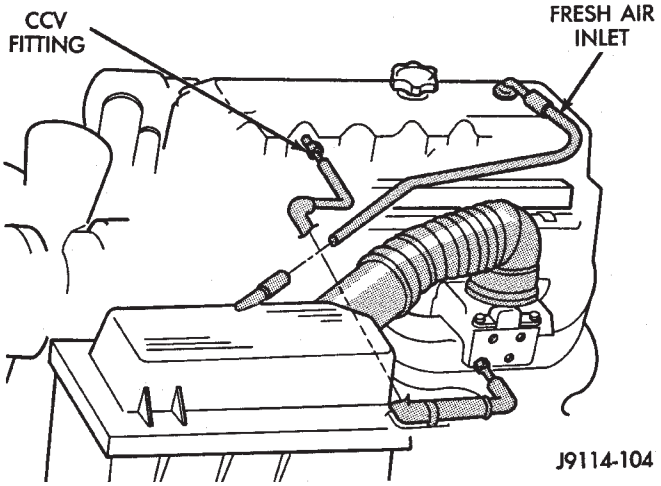

Fig. 1 Engine Cylinder Head Cover

CLEANING

Remove any original sealer from the cover sealing surface of the engine cylinder head and clean the surface using a fabric cleaner.

Remove all residue from the sealing surface using a clean, dry cloth.

INSPECTION

Inspect the engine cylinder head cover for cracks. Replace the cover, if cracked.

The original dark grey gasket material should NOT be removed. If sections of the gasket material are missing or are compressed, replace the engine cylinder head cover. However, sections with minor damage such as small cracks, cuts or chips may be repaired with a hand held applicator. The new material must be smoothed over to maintain gasket height. Allow the gasket material to cure prior to engine cylinder head cover installation.

INSTALLATION

(1) If a replacement cover is installed, transfer the CCV valve grommet the oil filler cap from the original cover to the replacement cover.

(2) Install engine cylinder head cover. Tighten the mounting bolts to 10 N·m (85 in. lbs.) torque.

(3) Connect the CCV hoses (Fig. 1).
(4) Connect negative cable to battery.

VALVE COMPONENT REPLACE—CYLINDER HEAD NOT REMOVED

ROCKER ARMS AND PUSH RODS

This procedure can be done with the engine in or out of the vehicle.

REMOVAL

(1) Remove the engine cylinder head cover.
(2) Remove the capscrews at each bridge and pivot assembly (Fig. 2). Alternately loosen the capscrews one turn at a time to avoid damaging the bridges.
(3) Check for rocker arm bridges which are causing misalignment of the rocker arm to valve tip area.
(4) Remove the bridges, pivots and corresponding pairs of rocker arms (Fig. 2). Place them on a bench in the same order as removed.
(5) Remove the push rods and place them on a bench in the same order as removed.

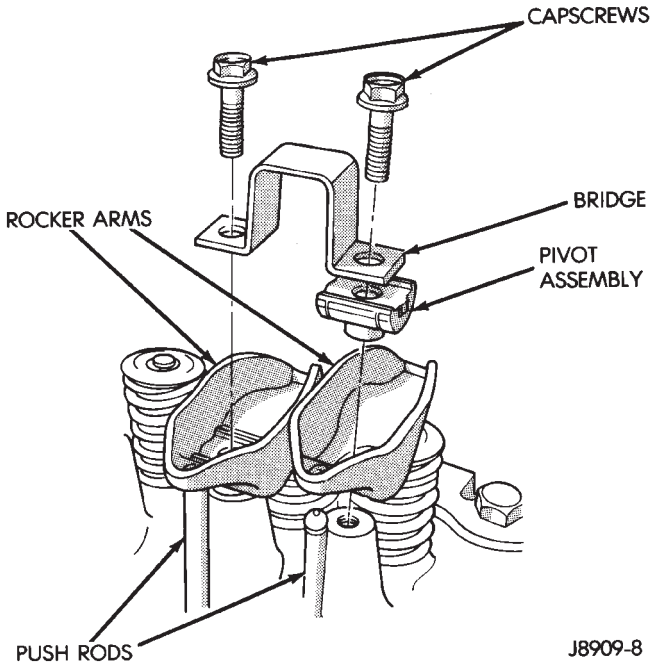

Fig. 2 Rocker Arm Assembly

CLEANING

Clean all the components with cleaning solvent.
Use compressed air to blow out the oil passages in the rocker arms and push rods.

INSPECTION

Inspect the pivot surface area of each rocker arm. Replace any that are scuffed, pitted, cracked or excessively worn.
Inspect the valve stem tip contact surface of each rocker arm and replace any rocker arm that is deeply pitted.
Inspect each push rod end for excessive wear and replace as required. If any push rod is excessively worn because of lack of oil, replace it and inspect the corresponding hydraulic tappet for excessive wear.
Inspect the push rods for straightness by rolling them on a flat surface or by shining a light between the push rod and the flat surface.
A wear pattern along the length of the push rod is not normal. Inspect the engine cylinder head for obstruction if this condition exists.

INSTALLATION

(1) Lubricate the ball ends of the push rods with Mopar Engine Oil Supplement, or equivalent and install push rods in their original locations. Ensure that the bottom end of each push rod is centered in the tappet plunger cap seat.
(2) Using Mopar Engine Oil Supplement, or equivalent, lubricate the area of the rocker arm that the pivot contacts. Install rocker arms, pivots and bridge above each cylinder in their original position.
(3) Loosely install the capscrews through each bridge.
(4) At each bridge, tighten the capscrews alternately, one turn at a time, to avoid damaging the bridge. Tighten the capscrews to 28 N·m (21 ft. lbs.) torque.
(5) Install the engine cylinder head cover.

VALVE SPRINGS AND OIL SEALS

This procedure can be done with the engine cylinder head installed on the block.

REMOVAL

Each valve spring is held in place by a retainer and a set of conical valve locks. The locks can be removed only by compressing the valve spring.
(1) Remove the engine cylinder head cover.
(2) Remove capscrews, bridge and pivot assemblies and rocker arms for access to each valve spring to be removed.
(3) Remove push rods. Retain the push rods, bridges, pivots and rocker arms in the same order and position as removed.
(4) Inspect the springs and retainer for cracks and possible signs of weakening.
(5) Remove the spark plug(s) adjacent to the cylinder(s) below the valve springs to be removed.
(6) Install a 14 mm (1/2 inch) (thread size) air hose adaptor in the spark plug hole.
(7) Connect an air hose to the adapter and apply air pressure slowly. Maintain at least 621 kPa (90 psi) of air pressure in the cylinder to hold the valves against their seats. For vehicles equipped with an air conditioner, use a flexible air adaptor when servicing the No.1 cylinder.
(8) Tap the retainer or tip with a rawhide hammer to loosen the lock from the retainer. Use Valve Spring

Compressor Tool MD-998772A to compress the spring and remove the locks (Fig. 7).

(9) Remove valve spring and retainer (Fig. 7).

(10) Remove valve stem oil seals (Fig. 7). Note the valve seals are different for intake and exhaust valves. The top of each seal is marked either INT (Intake) or EXH (Exhaust). DO NOT mix the seals.

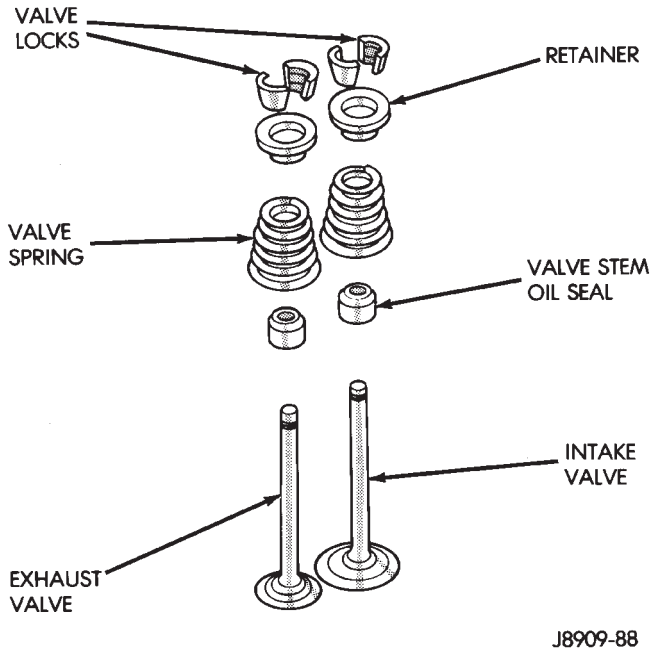

Fig. 7 Valve and Valve Components

INSPECTION

Inspect the valve stems, especially the grooves. An Arkansas smooth stone should be used to remove nicks and high spots.

INSTALLATION

CAUTION: Install oil seals carefully to prevent damage from the sharp edges of the valve spring lock grove.

(1) Lightly push the valve seal over the valve stem and valve guide boss. Be sure the seal is completely seated on the valve guide boss.

(2) Install valve spring and retainer.

(3) Compress the valve spring with Valve Spring Compressor Tool MD-998772A and insert the valve locks. Release the spring tension and remove the tool. Tap the spring from side-to-side to ensure that the spring is seated properly on the engine cylinder head.

(4) Disconnect the air hose. Remove the adaptor from the spark plug hole and install the spark plug.

(5) Repeat the procedures for each remaining valve spring to be removed.

(6) Install the push rods. Ensure the bottom end of each rod is centered in the plunger cap seat of the hydraulic valve tappet.

(7) Install the rocker arms, pivots and bridge at their original location.

(8) Tighten the bridge capscrews alternately, one at a time, to avoid damaging the bridge. Tighten the capscrews to 28 N·m (21 ft. lbs.) torque.

(9) Install the engine cylinder head cover.

HYDRAULIC TAPPETS

Retain all the components in the same order as removed.

REMOVAL

(1) Remove the engine cylinder head cover.

(2) Remove the bridge and pivot assemblies and rocker arms by removing the capscrews at each bridge. Alternately loosen each capscrew, one turn at a time, to avoid damaging the bridges.

(3) Remove the push rods.

(4) Remove the tappets through the push rod openings in the cylinder head with Hydraulic Valve Tappet Removal/Installation Tool C-4129-A (Fig. 13).

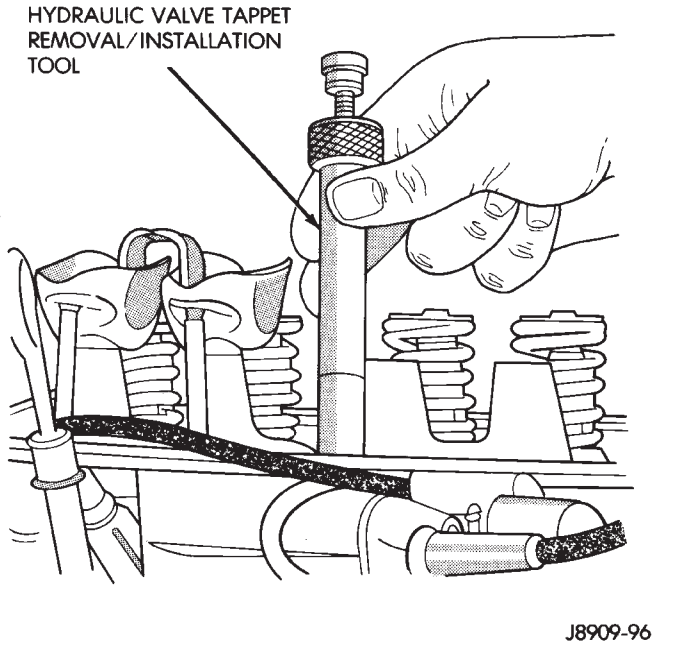

Fig. 13 Hydraulic Valve Tappet Removal/Installation Tool C-4129-A

CLEANING

Clean each tappet assembly in cleaning solvent to remove all varnish, gum and sludge deposits.

INSPECTION

Inspect for indications of scuffing on the side and base of each tappet body.

Inspect each tappet base for concave wear with a straightedge positioned across the base. If the base is concave, the corresponding lobe on the camshaft is also worn. Replace the camshaft and defective tappets.

LEAK-DOWN TEST

After cleaning and inspection, test each tappet for specified leak-down rate tolerance to ensure zero-lash operation (Fig. 14).

Swing the weighted arm of the hydraulic valve tappet tester away from the ram of the Universal Leak-Down Tester .

(1) Place a 7.925-7.950 mm (0.312-0.313 inch) diameter ball bearing on the plunger cap of the tappet.

(2) Lift the ram and position the tappet (with the ball bearing) inside the tester cup.

(3) Lower the ram, then adjust the nose of the ram until it contacts the ball bearing. DO NOT tighten the hex nut on the ram.

(4) Fill the tester cup with hydraulic valve tappet test oil until the tappet is completely submerged.

(5) Swing the weighted arm onto the push rod and pump the tappet plunger up and down to remove air. When the air bubbles cease, swing the weighted arm away and allow the plunger to rise to the normal position.

(6) Adjust the nose of the ram to align the pointer with the SET mark on the scale of the tester and tighten the hex nut.

(7) Slowly swing the weighted arm onto the push rod.

(8) Rotate the cup by turning the handle at the base of the tester clockwise one revolution every 2 seconds.

(9) Observe the leak-down time interval from the instant the pointer aligns with the START mark on the scale until the pointer aligns with the 0.125 mark. A normally functioning tappet will require 20-110 seconds to leak-down. Discard tappets with leak-down time interval not within this specification.

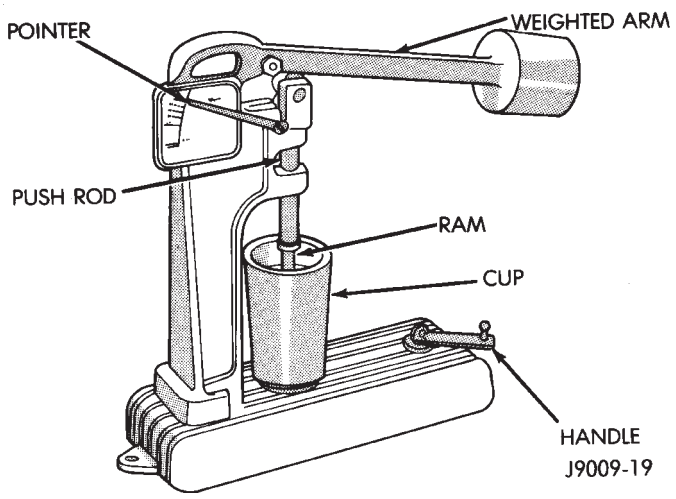

Fig. 14 Leak-Down Tester

INSTALLATION

It is not necessary to charge the tappets with engine oil. They will charge themselves within a very short period of engine operation.

(1) Dip each tappet in Mopar Engine Oil Supplement, or equivalent.

(2) Use Hydraulic Valve Tappet Removal/Installation Tool C-4129-A to install each tappet in the same bore from where it was originally removed.

(3) Install the push rods in their original locations.

(4) Install the rocker arms and bridge and pivot assemblies at their original locations. Loosely install the capscrews at each bridge.

(5) Tighten the capscrews alternately, one turn at a time, to avoid damaging the bridges. Tighten the capscrews to 28 N·m (21 ft. lbs.) torque.

(6) Pour the remaining Mopar Engine Oil Supplement, or equivalent over the entire valve actuating assembly. The Mopar Engine Oil Supplement, or equivalent must remain with the engine oil for at least 1 600 km (1,000 miles). The oil supplement need not be drained until the next scheduled oil change.

(7) Install the engine cylinder head cover.

ENGINE CYLINDER HEAD

This procedure can be done with the engine in or out of the vehicle.

REMOVAL

(1) Disconnect negative cable from battery.

WARNING: DO NOT REMOVE THE CYLINDER BLOCK DRAIN PLUGS OR LOOSEN THE RADIATOR DRAIN COCK WITH THE SYSTEM HOT AND PRESSURIZED BECAUSE SERIOUS BURNS FROM THE COOLANT CAN OCCUR.

(2) Drain the coolant and disconnect the hoses at the engine thermostat housing. DO NOT waste reusable coolant. If the solution is clean and is being drained only to service the engine or cooling system, drain the coolant into a clean container for reuse.

(3) Remove the air cleaner assembly.

(4) Remove the engine cylinder head cover.

(5) Remove the capscrews, bridge and pivot assemblies and rocker arms (Fig. 2).

(6) Remove the push rods (Fig. 2). **Retain the push rods, bridges, pivots and rocker arms in the same order as removed.**

(7) Loosen the serpentine drive belt at the power steering pump, if equipped or at the idler pulley (refer to Group 7, Cooling System for the proper procedure).

(8) If equipped with air conditioning, perform the following:

(a) Remove the bolts from the A/C compressor mounting bracket and set the compressor aside.

(b) Remove the air conditioner compressor bracket bolts from the engine cylinder head.

(c) Loosen the through bolt at the bottom of the bracket.

(9) If equipped, disconnect the power steering pump bracket. Set the pump and bracket aside. DO NOT disconnect the hoses.

(10) Remove the fuel lines and vacuum advance hose.

(11) Remove the intake and engine exhaust manifolds from the engine cylinder head (refer to Group 11, Exhaust System and Intake Manifold for the proper procedures).

(12) Disconnect the ignition wires and remove the spark plugs.

(13) Disconnect the temperature sending unit wire connector.

(14) Remove the ignition coil and bracket assembly.

(15) Remove the engine cylinder head bolts.

(16) Remove the engine cylinder head and gasket (Fig. 3).

(17) If this was the first time the bolts were removed, put a paint dab on the top of the bolt. If the bolts have a paint dab on the top of the bolt or it isn't known if they were used before, discard the bolts.

(18) Stuff clean lint free shop towels into the cylinder bores.

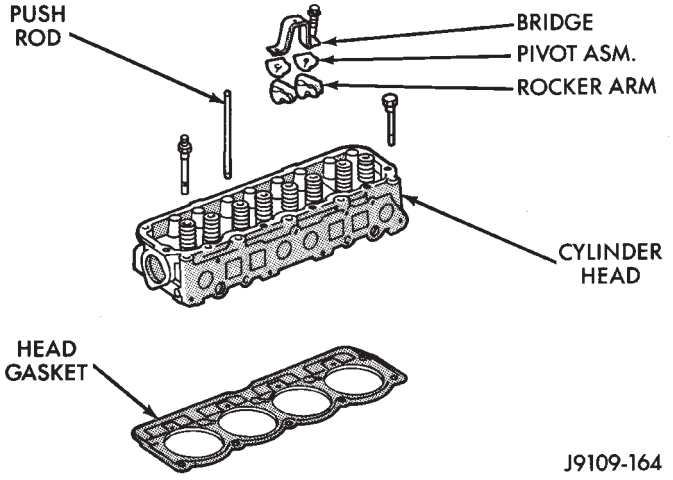

Fig. 3 Engine Cylinder Head Assembly

CLEANING

Thoroughly clean the engine cylinder head and cylinder block mating surfaces. Clean the intake and exhaust manifold and engine cylinder head mating surfaces. Remove all gasket material and carbon.

Check to ensure that no coolant or foreign material has fallen into the tappet bore area.

Remove the carbon deposits from the combustion chambers and top of the pistons.

INSPECTION

Use a straightedge and feeler gauge to check the flatness of the engine cylinder head and block mating surfaces.

INSTALLATION

The engine cylinder head gasket is a composition gasket. The gasket is to be installed DRY. **DO NOT use a gasket sealing compound on the gasket.**

If the engine cylinder head is to be replaced and the original valves used, measure the valve stem diameter. Only standard size valves can be used with a service replacement engine cylinder head unless the replacement head valve stem guide bores are reamed to accommodate oversize valve stems. Remove all carbon buildup and reface the valves.

(1) Fabricate two engine cylinder head alignment dowels from used head bolts (Fig. 4). Use the longest head bolt. Cut the head of the bolt off below the hex head. Then cut a slot in the top of the dowel to allow easier removal with a screwdriver.

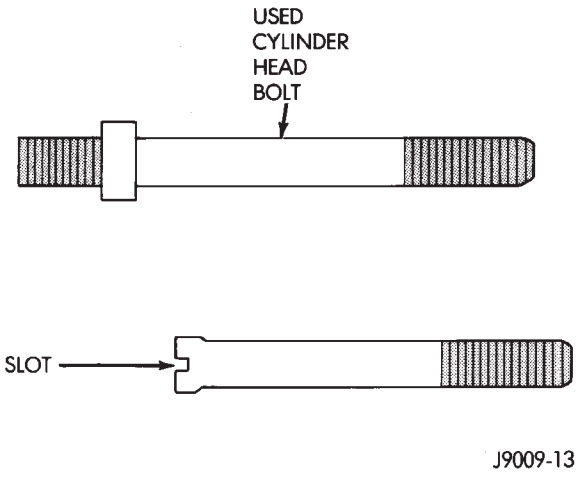

Fig. 4 Fabricate Alignment Dowels

(2) Install one dowel in bolt hole No.10 and the other dowel in bolt hole No.8 (Fig. 5).

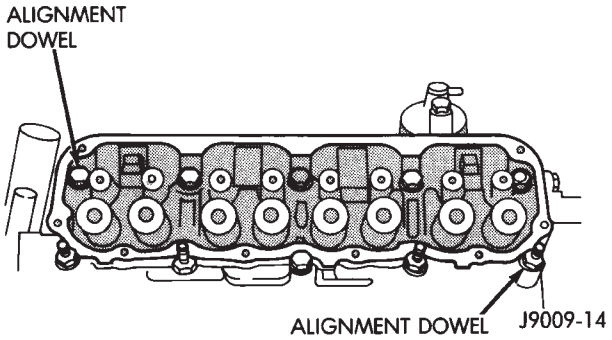

Fig. 5 Alignment Dowel Locations

(3) Remove the shop towels from the cylinder bores. Coat the bores with clean engine oil.

(4) Place the engine cylinder head gasket (with the numbers facing up) over the dowels.

(5) Place the engine cylinder head over the dowels.

CAUTION: Engine cylinder head bolts should be reused only once. Replace the head bolts if they were used before or if they have a paint dab on the top of the bolt.

(6) Coat the threads of bolt No.7, only, with Loctite PST sealant or equivalent.
(7) Install all head bolts, except No.8 and No.10.
(8) Remove the dowels.
(9) Install No.8 and No.10 head bolts.
(10) Tighten the engine cylinder head bolts in sequence according to the following procedure (Fig. 6):
(a) Tighten all bolts in sequence (1 through 10) to 30 N·m (22 ft. lbs.) torque.
(b) Tighten all bolts in sequence (1 through 10) to 61 N·m (45 ft. lbs.) torque.
(c) Check all bolts to verify they are set to 61 N·m (45 ft. lbs.) torque.
(d) Tighten bolts (in sequence):
- Bolts 1 through 6 to 149 N·m (110 ft. lbs.) torque.
- Bolt 7 to 136 N·m (100 ft. lbs.) torque.
- Bolts 8 through 10 to 149 N·m (110 ft. lbs.) torque.

CAUTION: During the final tightening sequence, bolt No.7 will be tightened to a lower torque than the rest of the bolts. DO NOT overtighten bolt No.7.

(e) Check all bolts in sequence to verify the correct torque.
(f) If not already done, clean and mark each bolt with a dab of paint after tightening. Should you encounter bolts which were painted in an earlier service operation, replace them.

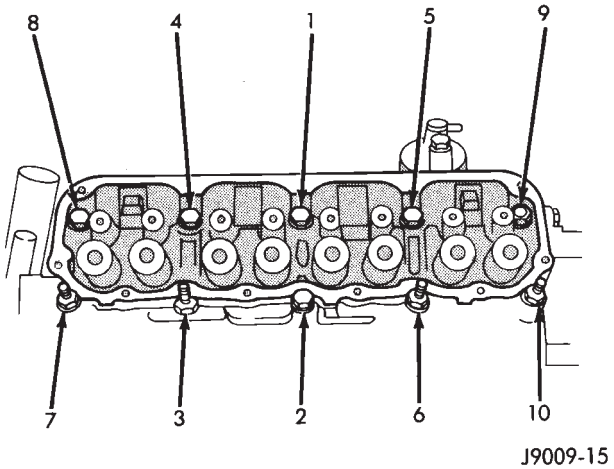

Fig. 6 Engine cylinder head Bolt Tightening Sequence

(11) Install the ignition coil and bracket assembly.
(12) Connect the temperature sending unit wire connector.
(13) Install the spark plugs and tighten to 37 N·m (27 ft. lbs.) torque. Connect the ignition wires.
(14) Install the intake and exhaust manifolds (refer to Group 11, Exhaust System and Intake Manifold for the proper procedures).
(15) Install the fuel lines and the vacuum advance hose.
(16) If equipped, attach the power steering pump and bracket.
(17) Install the push rods, rocker arms, pivots and bridges in the order they were removed.
(18) Install the engine cylinder head cover.
(19) Attach the air conditioning compressor mounting bracket to the engine cylinder head and block. Tighten the bolts to 40 N·m (30 ft. lbs.) torque.
(20) Attach the air conditioning compressor to the bracket. Tighten the bolts to 27 N·m (20 ft. lbs.) torque.

CAUTION: The serpentine drive belt must be routed correctly. Incorrect routing can cause the water pump to turn in the opposite direction causing the engine to overheat.

(21) Install the serpentine drive belt and correctly tension the belt (refer to Group 7, Cooling System for the proper procedure).
(22) Install the air cleaner and ducting.
(23) Install the engine cylinder head cover.
(24) Connect the hoses to the thermostat housing and fill the cooling system to the specified level (refer to Group 7, Cooling Systems for the proper procedure).
(25) The automatic transmission throttle linkage and cable must be adjusted after completing the engine cylinder head installation (refer to Group 21, Transmissions for the proper procedures).
(26) Install the temperature sending unit and connect the wire connector.
(27) Connect the fuel pipe and vacuum advance hose.
(28) Connect negative cable to battery.
(29) Connect the upper radiator hose and heater hose at the thermostat housing.
(30) Fill the cooling system. Check for leaks.

WARNING: USE EXTREME CAUTION WHEN THE ENGINE IS OPERATING. DO NOT STAND IN DIRECT LINE WITH THE FAN. DO NOT PUT HANDS NEAR THE PULLEYS, BELTS OR FAN. DO NOT WEAR LOOSE CLOTHING.

(31) Operate the engine with the radiator cap off. Inspect for leaks and continue operating the engine until the thermostat opens. Add coolant, if required.

VALVES AND VALVE SPRINGS

This procedure is done with the engine cylinder head removed from the block.

REMOVAL

(1) Remove the engine cylinder head from the cylinder block.

(2) Use Valve Spring Compressor Tool MD-998772A and compress each valve spring.

(3) Remove the valve locks, retainers, springs and valve stem oil seals. Discard the oil seals.

(4) Use an Arkansas smooth stone or a jewelers file to remove any burrs on the top of the valve stem, especially around the groove for the locks.

(5) Remove the valves, and place them in a rack in the same order as removed.

VALVE CLEANING

Clean all carbon deposits from the combustion chambers, valve ports, valve stems, valve stem guides and head.

Clean all grime and gasket material from the engine cylinder head machined gasket surface.

INSPECTION

Inspect for cracks in the combustion chambers and valve ports.

Inspect for cracks on the exhaust seat.

Inspect for cracks in the gasket surface at each coolant passage.

Inspect valves for burned, cracked or warped heads.

Inspect for scuffed or bent valve stems.

Replace valves displaying any damage.

VALVE REFACING

(1) Use a valve refacing machine to reface the intake and exhaust valves to the specified angle.

(2) After refacing, a margin of at least 0.787 mm (0.031 inch) must remain (Fig. 8). If the margin is less than 0.787 mm (0.031 inch), the valve must be replaced.

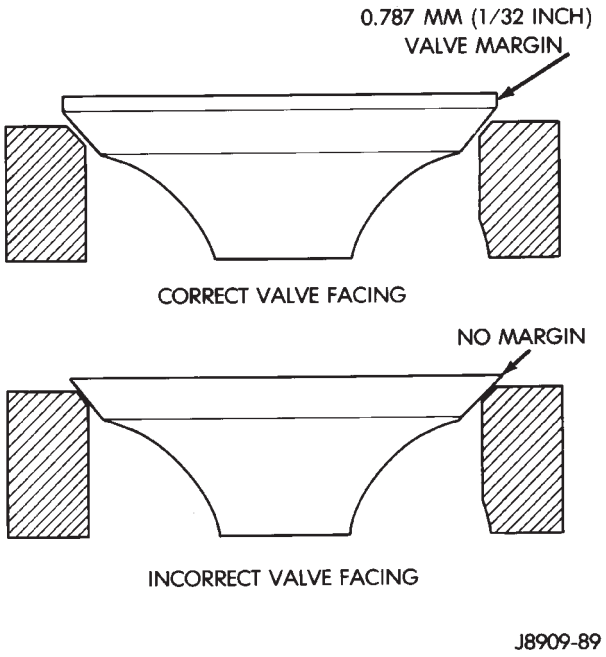

Fig. 8 Valve Facing Margin

VALVE SEAT REFACING

(1) Install a pilot of the correct size in the valve guide bore. Reface the valve seat to the specified angle with a good dressing stone. Remove only enough metal to provide a smooth finish.

(2) Use tapered stones to obtain the specified seat width when required.

(3) Control valve seat runout to a maximum of 0.0635 mm (0.0025 in.)—(Fig. 9).

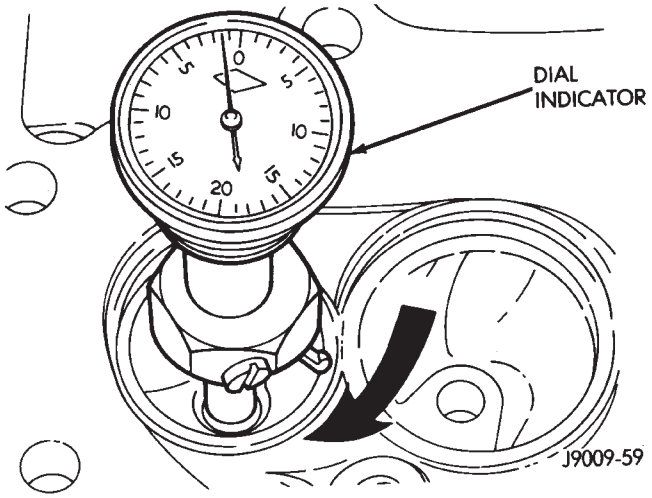

Fig. 9 Measurement of Valve Seat Runout

VALVE STEM OIL SEAL REPLACEMENT

Valve stem oil seals are installed on each valve stem to prevent rocker arm lubricating oil from entering the combustion chamber through the valve guide bores. One seal is marked INT (intake valve) and the other is marked EXH (exhaust valve).

Replace the oil seals whenever valve service is performed or if the seals have deteriorated.

VALVE GUIDES

The valve guides are an integral part of the engine cylinder head and are not replaceable.

When the valve stem guide clearance is excessive, the valve guide bores must be reamed oversize. Service valves with oversize stems are available in 0.076 mm (0.003 inch) and 0.381 mm (0.015 inch) increments.

Corresponding oversize valve stem seals are also available and must be used with valves having 0.381 mm (0.015 inch) oversize stems, 0.076mm (.003in.) oversize stems do not require oversize seals.

If the valve guides are reamed oversize, the valve seats must be ground to ensure that the valve seat is concentric to the valve guide.

VALVE STEM-TO-GUIDE CLEARANCE MEASUREMENT

Valve stem-to-guide clearance may be measured by either of the following two methods.

PREFERRED METHOD:

(1) Remove the valve from the head.

(2) Clean the valve stem guide bore with solvent and a bristle brush.

(3) Insert a telescoping gauge into the valve stem guide bore approximately 9.525 mm (.375 inch) from the valve spring side of the head (Fig. 10).

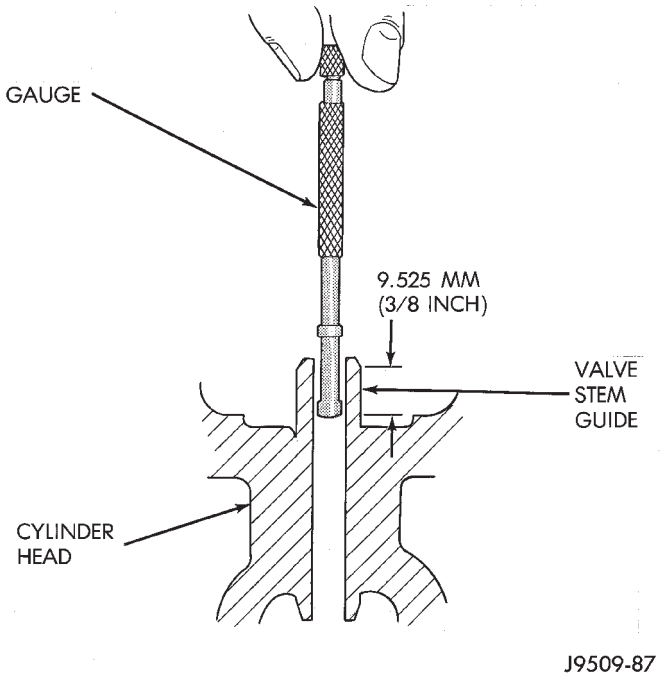

Fig. 10 Measurement of Valve Guide Bore Diameter

(4) Remove and measure telescoping gauge with a micrometer.

(5) Repeat the measurement with contacts lengthwise to engine cylinder head.

(6) Compare the crosswise to lengthwise measurements to determine out-of-roundness. If the measurements differ by more than 0.0635 mm (0.0025 in.), ream the guide bore to accommodate an oversize valve stem.

(7) Compare the measured valve guide bore diameter with specifications (7.95-7.97 mm or 0.313-0.314 inch). If the measurement differs from specification by more than 0.076 mm (0.003 inch), ream the guide bore to accommodate an oversize valve stem.

ALTERNATIVE METHOD:

(1) Use a dial indicator to measure the lateral movement of the valve stem (stem-to-guide clearance). This must be done with the valve installed in its guide and just off the valve seat (Fig. 11).

(2) Correct clearance is 0.025-0.0762 mm (0.001-0.003 inch). If indicated movement exceeds the specification ream the valve guide to accommodate an oversize valve stem.

Valve seats must be ground after reaming the valve guides to ensure that the valve seat is concentric to the valve guide.

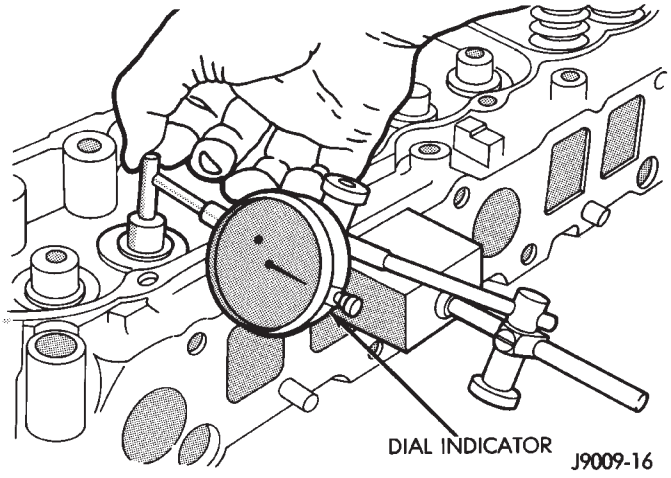

Fig. 11 Measurement of Lateral Movement Of Valve Stem

VALVE SPRING TENSION TEST

Use a Universal Valve Spring Tester and a torque wrench to test each valve spring for the specified tension value (Fig. 12).

Replace valve springs that are not within specifications.

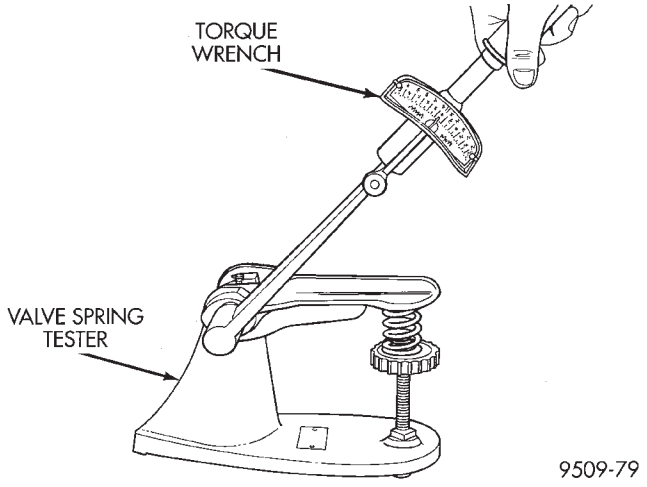

Fig. 12 Valve Spring Tester

INSTALLATION

(1) Thoroughly clean the valve stems and the valve guide bores.

(2) Lightly lubricate the stem.

(3) Install the valve in the original valve guide bore.

(4) Install the replacement valve stem oil seals on the valve stems. If the 0.381 mm (0.015 inch) oversize valve stems are used, oversize oil seals are required.

(5) Position the valve spring and retainer on the engine cylinder head and compress the valve spring with Valve Spring Compressor Tool MD-998772A.

(6) Install the valve locks and release the tool.

(7) Tap the valve spring from side to side with a hammer to ensure that the spring is properly seated

at the engine cylinder head. Also tap the top of the retainer to seat the valve locks.

(8) Install the engine cylinder head.

VALVE TIMING

Disconnect the spark plug wires and remove the spark plugs.

Remove the engine cylinder head cover.

Remove the capscrews, bridge and pivot assembly, and rocker arms from above the No.1 cylinder.

Alternately loosen each capscrew, one turn at a time, to avoid damaging the bridge.

Rotate the crankshaft until the No.4 piston is at top dead center (TDC) on the compression stroke.

Rotate the crankshaft counterclockwise (viewed from the front of the engine) 90°.

Install a dial indicator on the end of the No.1 cylinder intake valve push rod. Use rubber tubing to secure the indicator stem on the push rod.

Set the dial indicator pointer at zero.

Rotate the crankshaft clockwise (viewed from the front of the engine) until the dial indicator pointer indicates 0.305 mm (0.012 inch) travel distance (lift).

The timing notch index on the vibration damper should be aligned with the TDC mark on the timing degree scale.

If the timing notch is more than 13 mm (1/2 inch) away from the TDC mark in either direction, the valve timing is incorrect.

If the valve timing is incorrect, the cause may be a broken camshaft pin. It is not necessary to replace the camshaft because of pin failure. A spring pin is available for service replacement.

VIBRATION DAMPER

REMOVAL

(1) Disconnect negative cable from battery.

(2) Remove the serpentine drive belt and fan shroud.

(3) Remove the vibration damper retaining bolt and washer.

(4) Use Vibration Damper Removal Tool 7697 to remove the damper from the crankshaft (Fig. 1).

INSTALLATION

(1) Apply Mopar Silicone Rubber Adhesive Sealant to the keyway in the crankshaft and insert the key. With the key in position, align the keyway on the vibration damper hub with the crankshaft key and tap the damper onto the crankshaft.

(2) Install the vibration damper retaining bolt and washer.

(3) Tighten the damper retaining bolt to 108 N·m (80 ft. lbs.) torque.

(4) Install the serpentine drive belt and tighten to the specified tension (refer to Group 7, Cooling Systems for the proper specifications and procedures).

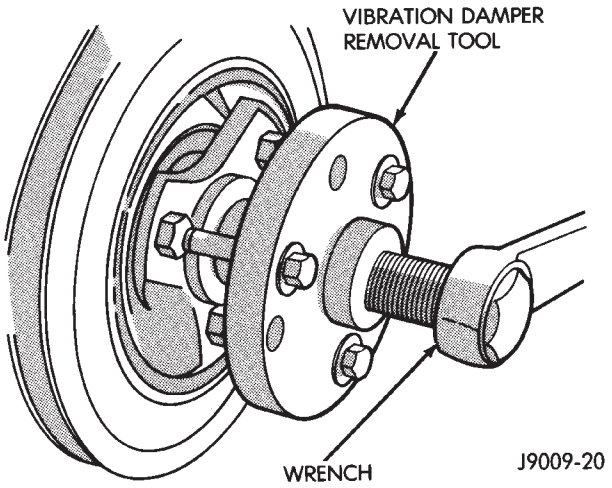

Fig. 1 Vibration Damper Removal Tool 7697

(5) Connect negative cable to battery.

TIMING CASE COVER OIL SEAL REPLACEMENT

This procedure is done with the timing case cover installed.

(1) Disconnect negative cable from battery.

(2) Remove the serpentine drive belt.

(3) Remove the vibration damper.

(4) Remove the radiator shroud.

(5) Carefully remove the oil seal. Make sure seal bore is clean.

(6) Position the replacement oil seal on Timing Case Cover Alignment and Seal Installation Tool 6139 with seal open end facing inward. Apply a light film of Perfect Seal, or equivalent, on the outside diameter of the seal. Lightly coat the crankshaft with engine oil.

(7) Position the tool and seal over the end of the crankshaft and insert a draw screw tool into Seal Installation Tool 6139 (Fig. 3). Tighten the nut against the tool until it contacts the cover.

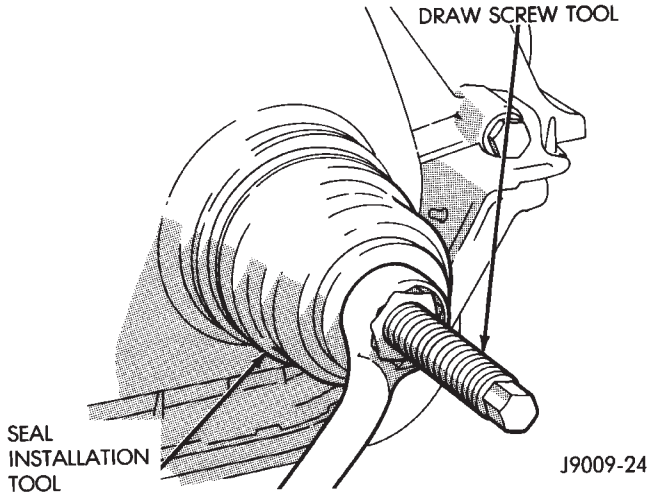

Fig. 3 Timing Case Cover Oil Seal Installation

(8) Remove the tools. Apply a light film of engine

oil on the vibration damper hub contact surface of the seal.

(9) Apply Mopar Silicone Rubber Adhesive Sealant to the keyway in the crankshaft and insert the key. With the key inserted in the keyway in the crankshaft, install the vibration damper, washer and bolt. Lubricate and tighten the bolt to 108 N·m (80 ft. lbs.) torque.

(10) Install the serpentine belt and tighten to the specified tension (refer to Group 7, Cooling Systems for the proper specifications and procedures).

(11) Install the radiator shroud.

(12) Connect negative cable to battery.

TIMING CASE COVER

REMOVAL

(1) Disconnect negative cable from battery.

(2) Remove the vibration damper (Fig. 4).

(3) Remove the fan and hub assembly and remove the fan shroud.

(4) Remove the accessory drive brackets that are attached to the timing case cover.

(5) Remove the A/C compressor (if equipped) and generator bracket assembly from the engine cylinder head and move to one side.

(6) Remove the oil pan-to-timing case cover bolts and timing case cover-to-cylinder block bolts.

(7) Remove the timing case cover and gasket from the engine.

(8) Pry the crankshaft oil seal from the front of the timing case cover (Fig. 4).

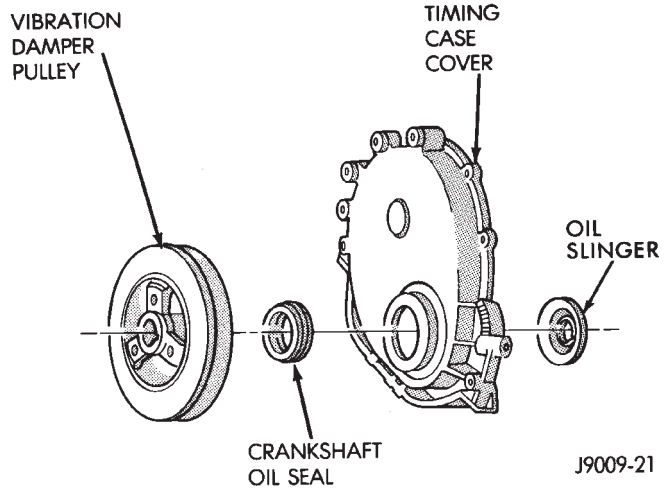

Fig. 4 Timing Case Cover Components

CLEANING

Clean the timing case cover, oil pan and cylinder block gasket surfaces.

INSTALLATION

(1) Install a new crankshaft oil seal in the timing case cover. The open end of the seal should be toward the inside of the cover. Support the cover at the seal area while installing the seal. Force it into position with Seal Installation Tool 6139.

(2) Position the gasket on the cylinder block.

(3) Position the timing case cover on the oil pan gasket and the cylinder block.

(4) Insert Timing Case Cover Alignment and Seal Installation Tool 6139 in the crankshaft opening in the cover (Fig. 5).

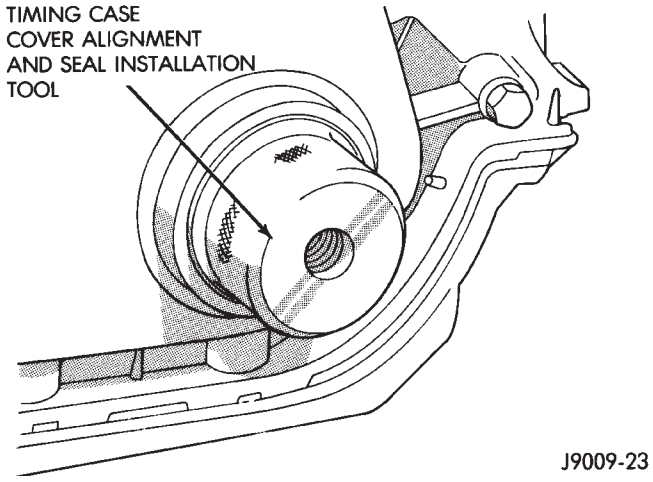

Fig. 5 Timing Case Cover Alignment and Seal Installation Tool 6139

(5) Install the timing case cover-to-cylinder block and the oil pan-to-timing case cover bolts.

(6) Tighten the 1/4 inch cover-to-block bolts to 7 N·m (60 in. lbs.) torque. Tighten the 5/16 inch front cover-to-block bolts to 22 N·m (192 in. lbs.) torque. Tighten the oil pan-to-cover 1/4 inch bolts to 14 N·m (120 in. lbs.) torque. Tighten the oil pan-to-cover 5/16 inch bolts to 18 N·m (156 in. lbs.) torque.

(7) Remove the cover alignment tool.

(8) Apply a light film of engine oil on the vibration damper hub contact surface of the seal.

(9) Apply Mopar Silicone Rubber Adhesive Sealant to the keyway in the crankshaft and insert the key. With the key inserted in the keyway in the crankshaft, install the vibration damper, washer and bolt. Lubricate and tighten the bolt to 108 N·m (80 ft. lbs.) torque.

(10) Install the A/C compressor (if equipped) and generator bracket assembly.

(11) Install the engine fan and hub assembly and shroud.

(12) Install the serpentine drive belt and tighten to obtain the specified tension.

(13) Connect negative cable to battery.

TIMING CHAIN AND SPROCKETS

The timing chain tensioner reduces noise and prolongs timing chain life. In addition, it compensates for slack in a worn or stretched chain and maintains the correct valve timing.

REMOVAL

(1) Disconnect negative cable from battery.
(2) Remove the fan and shroud.
(3) Remove the serpentine drive belt.
(4) Remove the crankshaft vibration damper.
(5) Remove the timing case cover.
(6) Rotate crankshaft until the "0" timing mark is closest to and on the center line with camshaft sprocket timing mark (Fig. 6).

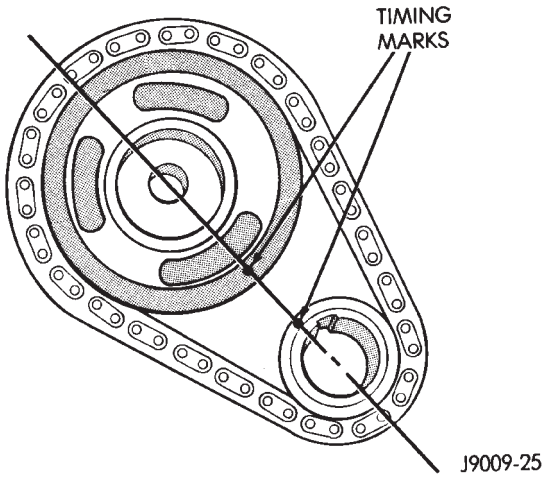

Fig. 6 Crankshaft—Camshaft Alignment

(7) Remove the oil slinger from the crankshaft.
(8) Remove the camshaft retaining bolt and remove the sprockets and chain as an assembly (Fig. 7).
(9) To replace the timing chain tensioner, the oil pan must be removed.

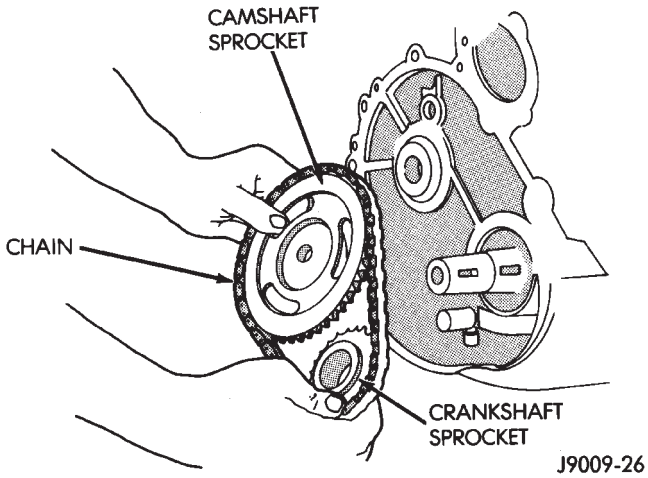

Fig. 7 Camshaft and Crankshaft Sprockets and Chain

INSTALLATION

(1) Turn the tensioner lever to the unlocked (down) position (Fig. 8).

(2) Pull the tensioner block toward the tensioner lever to compress the spring. Hold the block and turn the tensioner lever to the lock position (Fig. 8).

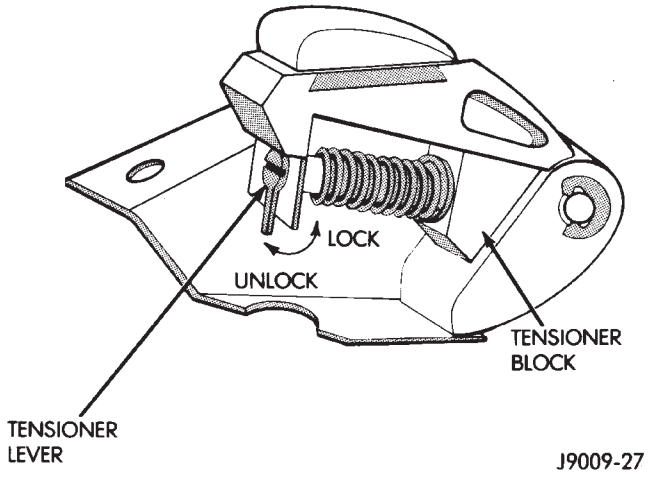

Fig. 8 Loading Timing Chain Tensioner

(3) Apply Mopar Silicone Rubber Adhesive Sealant to the keyway in the crankshaft and insert the key. With the key in the crankshaft keyway, install the crankshaft, camshaft sprockets and timing chain. Ensure the timing marks on the sprockets are properly aligned (Fig. 6).
(4) Install the camshaft sprocket retaining bolt and washer. Tighten the bolt to 108 N·m (80 ft. lbs.) torque.
(5) To verify correct installation of the timing chain, turn the crankshaft to position the camshaft sprocket timing mark as shown in Fig. 9. Count the number of chain pins between the timing marks of both sprockets. There must be 20 pins.
(6) Turn the chain tensioner lever to the unlocked (down) position (Fig. 8).
(7) Install the oil slinger.
(8) Replace the oil seal in the timing case cover.
(9) Install the timing case cover and gasket.
(10) With the key inserted in the keyway in the crankshaft, install the vibration damper, washer and bolt. Lubricate and tighten the bolt to 108 N·m (80 ft. lbs.) torque.
(11) Install the fan and shroud.
(12) Connect negative cable to battery.

CAMSHAFT

REMOVAL

WARNING: THE COOLANT IN A RECENTLY OPERATED ENGINE IS HOT AND PRESSURIZED. RELEASE THE PRESSURE BEFORE REMOVING THE DRAIN COCK, CAP AND DRAIN PLUGS.

(1) Disconnect negative cable from battery.

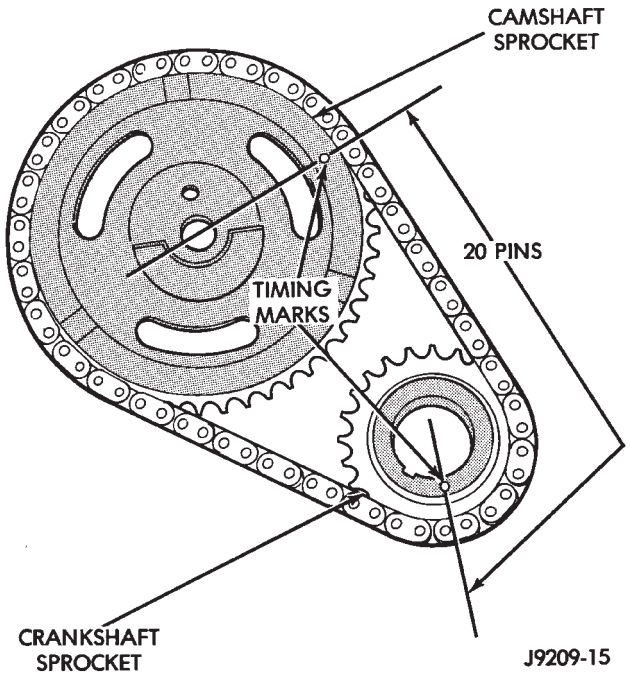

Fig. 9 Verify Sprocket—Chain Installation

(2) Drain the cooling system. DO NOT waste reusable coolant. If the solution is clean, drain it into a clean container for reuse.

(3) Remove the radiator or radiator and condenser, if equipped with A/C (refer to Group 7, Cooling System for the proper procedure).

(4) Scribe a mark on the distributor housing in line with the lip of the rotor.

(5) Scribe a mark on the distributor housing near the clamp and continue the scribe mark on the cylinder block in line with the distributor mark.

(6) For ease of installation, note the position of the rotor and distributor housing in relation to adjacent engine components.

(7) Remove the distributor and ignition wires.

(8) Remove the engine cylinder head cover.

(9) Remove the rocker arms, bridges and pivots.

(10) Remove the push rods.

(11) Remove the hydraulic valve tappets from the engine cylinder head.

(12) Remove the vibration damper.

(13) Remove the timing case cover.

(14) Remove the timing chain and sprockets.

(15) Remove the camshaft (Fig. 10).

INSPECTION

Inspect the cam lobes for wear.

Inspect the bearing journals for uneven wear pattern or finish.

Inspect the bearings for wear.

Inspect the distributor drive gear for wear.

If the camshaft appears to have been rubbing against the timing case cover, examine the oil pressure relief holes in the rear cam journal. The oil pressure relief holes must be free of debris.

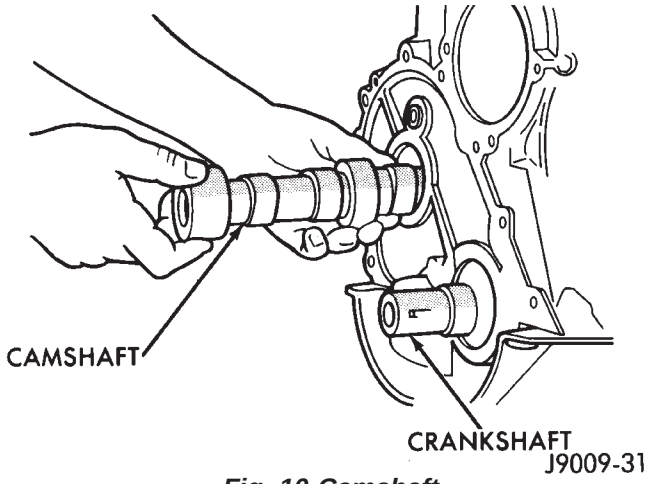

Fig. 10 Camshaft

INSTALLATION

(1) Lubricate the camshaft with Mopar Engine Oil Supplement, or equivalent.

(2) Carefully install the camshaft to prevent damage to the camshaft bearings (Fig. 10).

(3) Turn the tensioner lever to the unlocked (down) position (Fig. 8).

(4) Pull the tensioner block toward the tensioner lever to compress the spring. Hold the block and turn the tensioner lever to the lock position (Fig. 8).

(5) Install the timing chain, crankshaft sprocket and camshaft sprocket with the timing marks aligned.

(6) Install the camshaft sprocket retaining bolt and washer. Tighten the bolt to 108 N·m (80 ft. lbs.) torque.

(7) Install the timing case cover with a replacement oil seal (Fig. 11). Refer to Timing Case Cover Installation.

(8) Install the vibration damper.

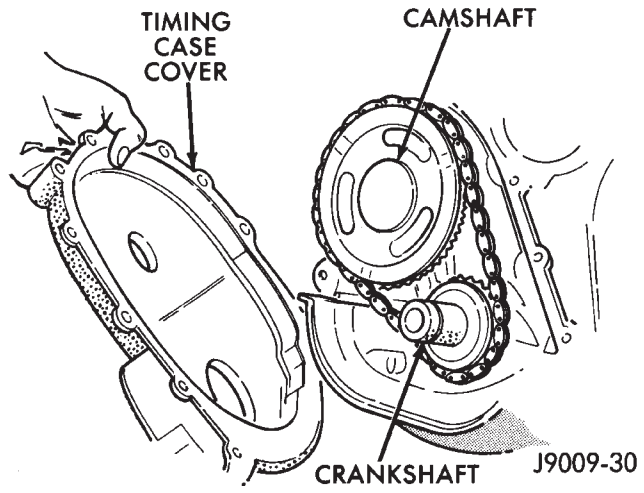

Fig. 11 Timing Case Cover

(9) Install the hydraulic valve tappets.

(10) Install the push rods.

(11) Install the rocker arms, bridges and pivots.

(12) Install the engine cylinder head cover.

(13) Position the oil pump gear. Refer to Distribu-

tor in the Component Removal/Installation section of Group 8D, Ignition Systems.

(14) Install the distributor and ignition wires. Refer to Distributor in the Component Removal/Installation section of Group 8D, Ignition Systems.

(15) Install the radiator or radiator and condenser, if equipped with A/C.

(16) Fill the cooling system.

(17) Connect negative cable to battery.

CAMSHAFT PIN REPLACEMENT

REMOVAL

WARNING: DO NOT LOOSEN THE RADIATOR DRAIN COCK WITH THE SYSTEM HOT AND PRESSURIZED BECAUSE SERIOUS BURNS FROM COOLANT CAN OCCUR.

(1) Disconnect negative cable from battery.

(2) Drain the radiator. DO NOT waste reusable coolant. Drain the coolant into a clean container.

(3) Remove the fan and shroud.

(4) Disconnect the radiator overflow tube, radiator hoses, automatic transmission fluid cooler pipes (if equipped).

(5) Remove the radiator.

(6) If equipped with air conditioning:

CAUTION: DO NOT loosen or disconnect any air conditioner system fittings. Move the condenser and receiver/drier aside as a complete assembly.

(a) Remove the A/C compressor serpentine drive belt idler pulley.

(b) Disconnect and remove the generator.

(c) Remove the A/C condenser attaching bolts and move the condenser and receiver/drier assembly up and out of the way.

(7) Remove the serpentine drive belt.

(8) Remove the crankshaft vibration damper.

(9) Remove the timing case cover. Clean the gasket material from the cover.

(10) Rotate crankshaft until the crankshaft sprocket timing mark is closest to and on the center line with the camshaft sprocket timing mark (Fig. 12).

(11) Remove camshaft sprocket retaining bolt.

(12) Remove the crankshaft oil slinger.

(13) Remove the sprockets and chain as an assembly (Fig. 13).

CAUTION: The following procedural step must be accomplished to prevent the camshaft from damaging the rear camshaft plug during pin installation.

(14) Inspect the damaged camshaft pin.

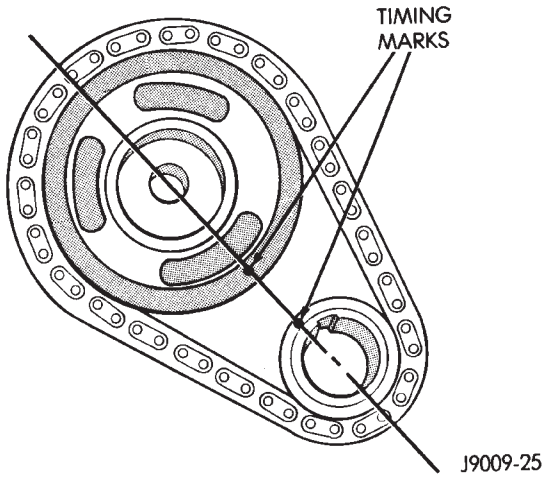

Fig. 12 Timing Chain Alignment

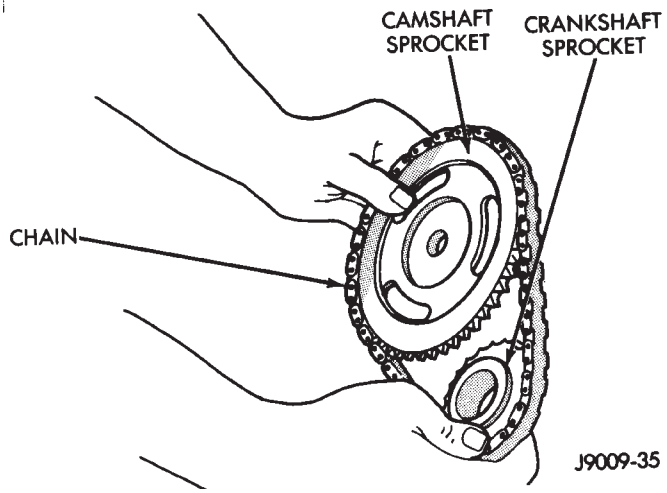

Fig. 13 Camshaft and Crankshaft Sprocket and Chain

(15) If the pin is a spring-type pin, remove the broken pin by inserting a self-tapping screw into the pin and carefully pulling the pin from the camshaft.

(16) If the pin is a dowel-type pin, center-punch it. Ensure the exact center is located when center-punching the pin.

CAUTION: Cover the opened oil pan area to prevent metal chips from entering the pan.

(17) Drill into the pin center with a 4 mm (5/32 inch) drill bit.

(18) Insert a self-tapping screw into the drilled pin and carefully pull the pin from the camshaft.

CAMSHAFT BEARINGS

The camshaft rotates within four steel-shelled, babbitt-lined bearings that are pressed into the cylinder block and then line reamed. The camshaft bearing bores and bearing diameters are not the same size. They are stepped down in 0.254 mm (0.010 inch) increments from the front bearing (largest) to the rear

bearing (smallest). This permits easier removal and installation of the camshaft. The camshaft bearings are pressure lubricated.

It is not advisable to attempt to replace camshaft bearings unless special removal and installation tools are available.

Camshaft end play is maintained by the load placed on the camshaft by the oil pump and distributor drive gear. The helical cut of the gear holds the camshaft sprocket thrust face against the cylinder block face.

INSTALLATION

(1) Clean the camshaft pin hole.

(2) Compress the center of the replacement spring pin with vise grips.

(3) Carefully drive the pin into the camshaft pin hole until it is seated.

(4) Install the camshaft sprocket, crankshaft sprocket and timing chain with the timing marks aligned (Fig. 12).

(5) To verify correct installation of the timing chain, turn the crankshaft to position the camshaft sprocket timing mark as shown in Fig. 14. Count the number of chain pins between the timing marks of both sprockets. There must be 20 pins.

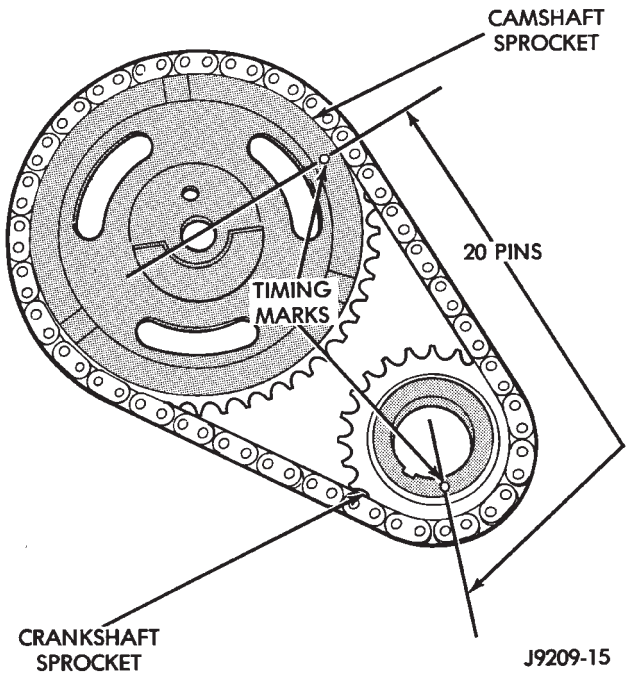

Fig. 14 Verify Crankshaft—Camshaft Installation

(6) Install the crankshaft oil slinger.

(7) Tighten the camshaft sprocket bolt to 108 N·m (80 ft. lbs.) torque.

(8) Check the valve timing.

(9) Coat both sides of the replacement timing case cover gasket with gasket sealer. Apply a 3 mm (1/8 inch) bead of Mopar Silicone Rubber Adhesive Sealant, or equivalent to the joint formed at the timing case cover and cylinder block.

(10) Position the timing case cover on the oil pan gasket and the cylinder block.

(11) Place Timing Case Cover Alignment and Seal Installation Tool 6139 in the crankshaft opening of the cover (Fig. 15).

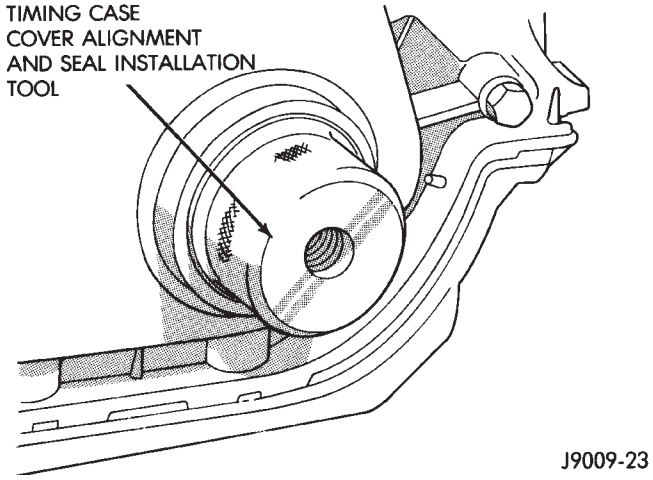

Fig. 15 Timing Case Cover Alignment and Seal Installation Tool 6139

(12) Install the timing case cover-to-cylinder block bolts. Install the oil pan-to-timing case cover bolts.

(13) Tighten the 1/4 inch cover-to-block bolts to 7 N·m (60 in. lbs.) torque. Tighten the 5/16 inch front cover-to-block bolts to 22 N·m (192 in. lbs.) torque. Tighten the oil pan-to-cover 1/4 inch bolts to 14 N·m (120 in. lbs.) torque. Tighten the oil pan-to-cover 5/16 inch bolts to 18 N·m (156 in. lbs.) torque.

(14) Remove the cover alignment tool and install a replacement oil seal into the cover.

(15) Install the vibration damper on the crankshaft.

(16) Lubricate and tighten the damper bolt to 108 N·m (80 ft. lbs.) torque.

(17) If equipped with air conditioning:

(a) Install the A/C compressor serpentine drive belt idler pulley.

(b) Install the generator.

(c) Install the A/C condenser and receiver/drier assembly.

(18) Install the serpentine drive belt on the pulleys and tighten (refer to Group 7, Cooling System for the specifications and procedures).

(19) Install the radiator. Connect the radiator hoses and automatic transmission fluid cooler pipes, if equipped. Fill the cooling system.

(20) Install the fan and shroud.

(21) Connect negative cable to battery.

OIL PAN

REMOVAL

(1) Disconnect negative cable from battery.
(2) Raise the vehicle.
(3) Remove the oil pan drain plug and drain the engine oil.
(4) Disconnect the exhaust pipe at the engine exhaust manifold.
(5) Disconnect the exhaust hanger at the catalytic converter and lower the pipe.
(6) Remove the engine starter motor.
(7) Remove the flywheel/torque converter housing access cover.
(8) Position a jack stand directly under the engine vibration damper.
(9) Place a piece of wood (2 x 2) between the jack stand and the engine vibration damper.
(10) Remove the engine mount through bolts.
(11) Using the jack stand, raise the engine until adequate clearance is obtained to remove the oil pan.
(12) Remove the oil pan bolts. Carefully remove the oil pan and gasket.

CLEANING

Clean the block and pan gasket surfaces.

INSTALLATION

(1) Fabricate 4 alignment dowels from 1/4 × 1 1/2 inch bolts. Cut the head off the bolts and cut a slot into the top of the dowel. This will allow easier installation and removal with a screwdriver (Fig. 1).

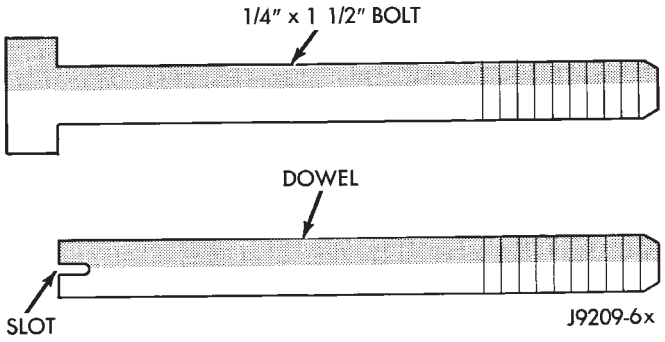

Fig. 1 Fabrication of Alignment Dowels

(2) Install two dowels in the timing case cover. Install the other two dowels in the cylinder block (Fig. 2).
(3) Slide the one-piece gasket over the dowels and onto the block and timing case cover.
(4) Position the oil pan over the dowels and onto the gasket.
(5) Install the 1/4 inch oil pan bolts. Tighten these bolts to 14 N·m (120 in. lbs.) torque. Install the 5/16 inch oil pan bolts (Fig. 3). Tighten these bolts to 18 N·m (156 in. lbs.) torque.
(6) Remove the dowels. Install the remaining 1/4 inch oil pan bolts. Tighten these bolts to 14 N·m (120 in. lbs.) torque.

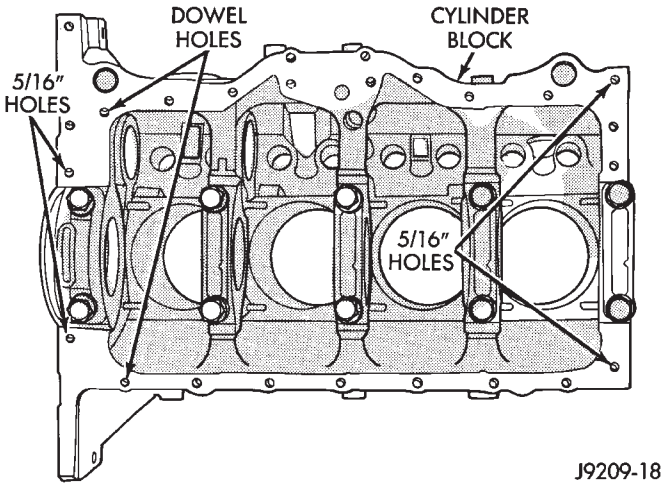

Fig. 2 Position of Dowels in Cylinder Block

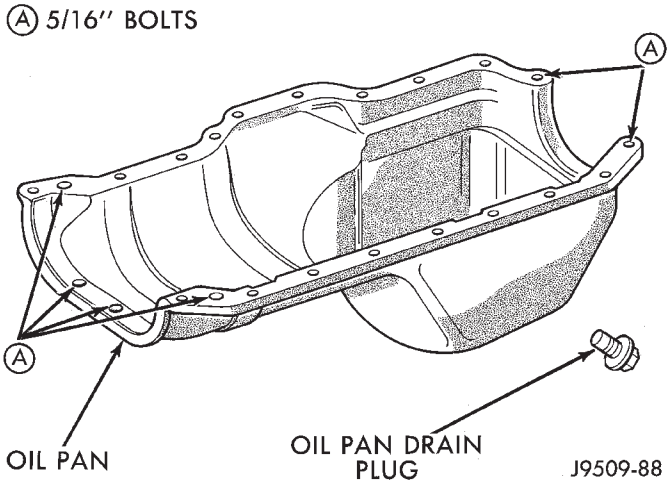

Fig. 3 Position of 5/16 inch Oil Pan Bolts

(7) Lower the engine until it is properly located on the engine mounts.
(8) Install the through bolts and tighten the nuts.
(9) Lower the jack stand and remove the piece of wood.
(10) Install the flywheel and torque converter housing access cover.
(11) Install the engine starter motor.
(12) Connect the exhaust pipe to the hanger and to the engine exhaust manifold.
(13) Install the oil pan drain plug (Fig. 3). Tighten the plug to 34 N·m (25 ft. lbs.) torque.
(14) Lower the vehicle.
(15) Connect negative cable to battery.
(16) Fill the oil pan with engine oil to the specified level.

WARNING: USE EXTREME CAUTION WHEN THE ENGINE IS OPERATING. DO NOT STAND IN A DIRECT LINE WITH THE FAN. DO NOT PUT YOUR HANDS NEAR THE PULLEYS, BELTS OR FAN. DO NOT WEAR LOOSE CLOTHING.

(17) Start the engine and inspect for leaks.

LUBRICATION SYSTEM

A gear—type positive displacement pump is mounted at the underside of the block opposite the No. 4 main bearing. The pump draws oil through the screen and inlet tube from the sump at the rear of the oil pan. The oil is driven between the drive and idler gears and pump body, then forced through the outlet to the block. An oil gallery in the block channels the oil to the inlet side of the full flow oil filter. After passing through the filter element, the oil passes from the center outlet of the filter through an oil gallery that channels the oil up to the main gallery which extends the entire length of the block.

Galleries extend downward from the main oil gallery to the upper shell of each main bearing. The crankshaft is drilled internally to pass oil from the main bearing journals (except number 4 main bearing journal) to the connecting rod journals. Each connecting rod bearing cap has a small squirt hole, oil passes through the squirt hole and is thrown off as the rod rotates. This oil throwoff lubricates the camshaft lobes, distributor drive gear, cylinder walls, and piston pins.

The hydraulic valve tappets receive oil directly from the main oil gallery. Oil is provided to the camshaft bearing through galleries. The front camshaft bearing journal passes oil through the camshaft sprocket to the timing chain. Oil drains back to the oil pan under the number one main bearing cap.

The oil supply for the rocker arms and bridged pivot assemblies is provided by the hydraulic valve tappets which pass oil through hollow push rods to a hole in the corresponding rocker arm. Oil from the rocker arm lubricates the valve train components, then passes down through the push rod guide holes in the cylinder head past the valve tappet area, and returns to the oil pan.

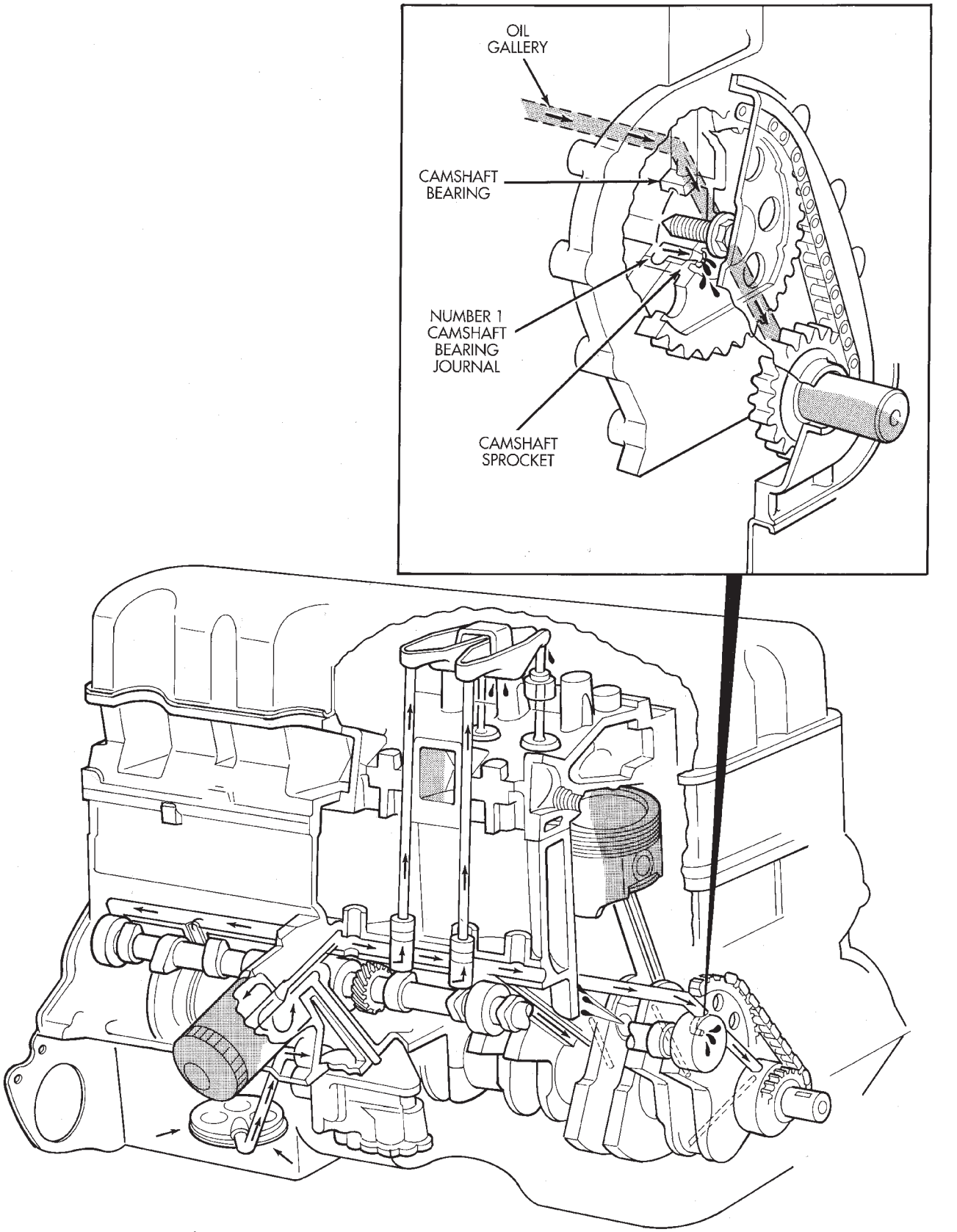

Fig. 4 Oil Lubrication System

OIL PUMP

The positive-displacement gear-type oil pump is driven by the distributor shaft, which is driven by a gear on the camshaft. Oil is siphoned into the pump through an inlet tube and strainer assembly that is pressed into the pump body.

The pump incorporates a nonadjustable pressure relief valve to limit maximum pressure to 517 kPa (75 psi). In the relief position, the valve permits oil to bypass through a passage in the pump body to the inlet side of the pump.

Oil pump removal or replacement will not affect the distributor timing because the distributor drive gear remains in mesh with the camshaft gear.

REMOVAL

(1) Drain the engine oil.
(2) Remove the oil pan.
(3) Remove the pump-to-cylinder block attaching bolts. Remove the pump assembly with gasket (Fig. 5).

CAUTION: If the oil pump is not to be serviced, DO NOT disturb position of oil inlet tube and strainer assembly in pump body. If the tube is moved within the pump body, a replacement tube and strainer assembly must be installed to assure an airtight seal.

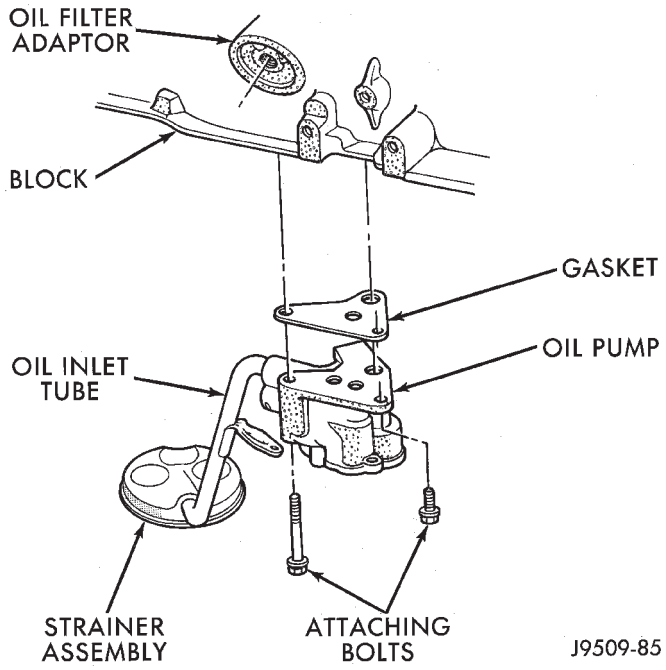

Fig. 5 Oil Pump Assembly

INSTALLATION

(1) Install the oil pump on the cylinder block using a replacement gasket. Tighten the bolts to 23 N·m (17 ft. lbs.) torque.
(2) Install the oil pan and gasket.
(3) Fill the oil pan with oil to the specified level.

OIL PUMP PRESSURE

The MINIMUM oil pump pressure is 89.6 kPa (13 psi) at 600 rpm. The MAXIMUM oil pump pressure is 255-517 kPa (37-75 psi) at 1600 rpm or more.

PISTONS AND CONNECTING RODS

REMOVAL

(1) Remove the engine cylinder head cover.
(2) Remove the rocker arms, bridges and pivots.
(3) Remove the push rods.
(4) Remove the engine cylinder head.
(5) Position the pistons one at a time near the bottom of the stroke. Use a ridge reamer to remove the ridge from the top end of the cylinder walls. Use a protective cloth to collect the cuttings.
(6) Raise the vehicle.
(7) Drain the engine oil.
(8) Remove the oil pan and gasket.
(9) Remove the connecting rod bearing caps and inserts. Mark the caps and rods with the cylinder bore location. The connecting rods and caps are stamped with a two letter combination (Fig. 1).

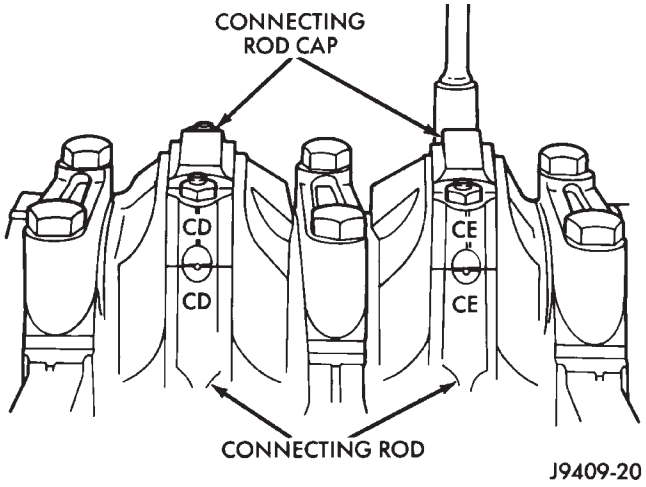

Fig. 1 Stamped Connecting Rods and Caps

(10) Lower the vehicle until it is about 2 feet from the floor.

CAUTION: Ensure that the connecting rod bolts DO NOT scratch the crankshaft journals or cylinder walls. Short pieces of rubber hose, slipped over the rod bolts will provide protection during removal.

(11) Have an assistant push the piston and connecting rod assemblies up and through the top of the cylinder bores (Fig. 2).

INSPECTION—CONNECTING ROD

CONNECTING ROD BEARINGS

Inspect the connecting rod bearings for scoring and bent alignment tabs (Figs. 3 and 4). Check the bear-

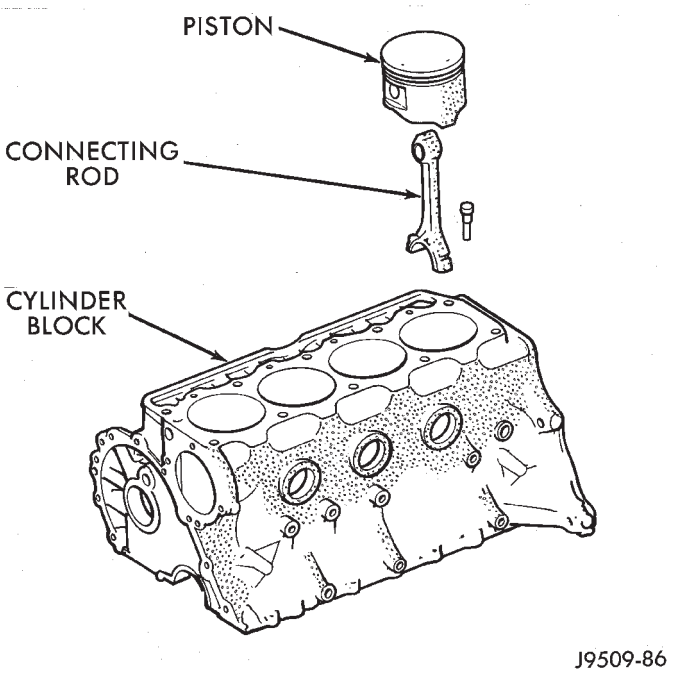

Fig. 2 Removal of Connecting Rod and Piston Assembly

ings for normal wear patterns, scoring, grooving, fatigue and pitting (Fig. 5). Replace any bearing that shows abnormal wear.

Inspect the connecting rod journals for signs of scoring, nicks and burrs.

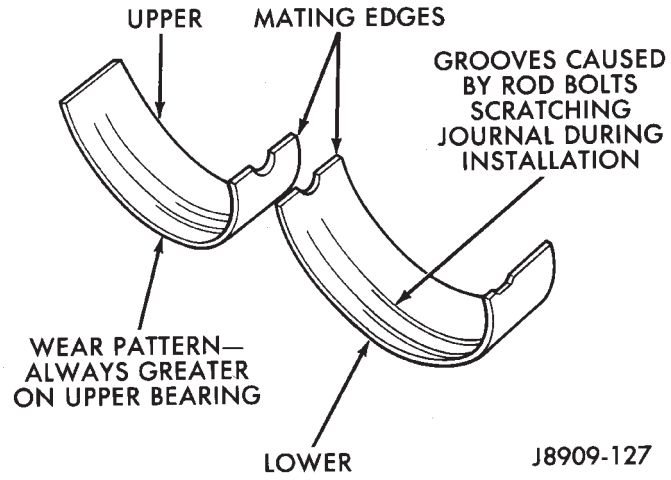

Fig. 3 Connecting Rod Bearing Inspection

CONNECTING RODS

Misaligned or bent connecting rods can cause abnormal wear on pistons, piston rings, cylinder walls, connecting rod bearings and crankshaft connecting rod journals. If wear patterns or damage to any of these components indicate the probability of a misaligned connecting rod, inspect it for correct rod alignment. Replace misaligned, bent or twisted connecting rods.

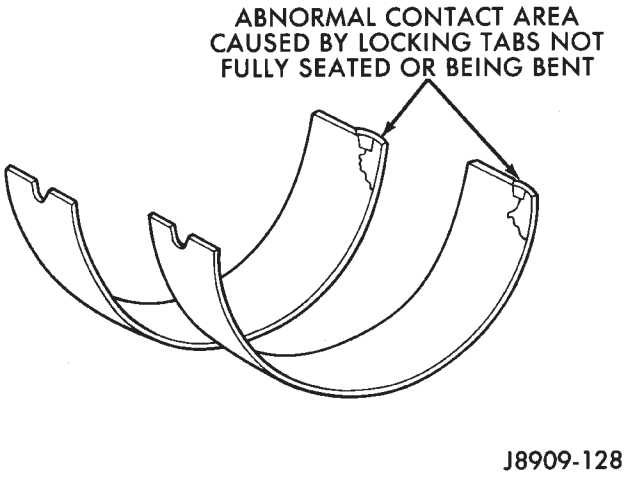

Fig. 4 Locking Tab Inspection

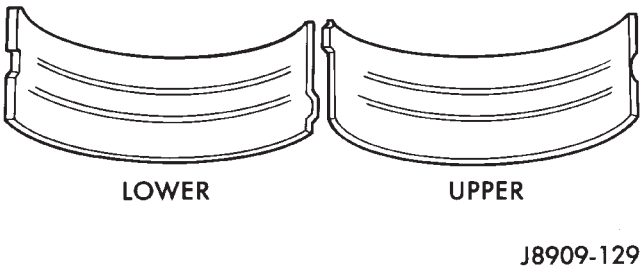

Fig. 5 Scoring Caused by Insufficient Lubrication or by Damaged Crankshaft Pin Journal

BEARING-TO-JOURNAL CLEARANCE

(1) Wipe the oil from the connecting rod journal.

(2) Use short rubber hose sections over rod bolts during installation.

(3) Lubricate the upper bearing insert and install in connecting rod.

(4) Use piston ring compressor to install the rod and piston assemblies. The oil squirt holes in the rods must face the camshaft. The arrow on the piston crown should point to the front of the engine (Fig. 6). Verify that the oil squirt holes in the rods face the camshaft and that the arrows on the pistons face the front of the engine.

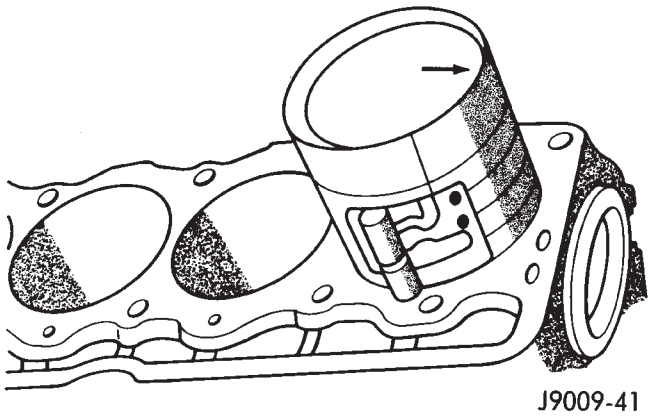

Fig. 6 Rod and Piston Assembly Installation

(5) Install the lower bearing insert in the bearing cap. The lower insert must be dry. Place strip of Plastigage across full width of the lower insert at the center of bearing cap. Plastigage must not crumble in use. If brittle, obtain fresh stock.

(6) Install bearing cap and connecting rod on the journal and tighten nuts to 45 N·m (33 ft. lbs.) torque. DO NOT rotate crankshaft. Plastigage will smear, resulting in inaccurate indication.

(7) Remove the bearing cap and determine amount of bearing-to-journal clearance by measuring the width of compressed Plastigage (Fig. 7). Refer to Engine Specifications for the proper clearance. **Plastigage should indicate the same clearance across the entire width of the insert. If the clearance varies, it may be caused by either a tapered journal, bent connecting rod or foreign material trapped between the insert and cap or rod.**

(8) If the correct clearance is indicated, replacement of the bearing inserts is not necessary. Remove the Plastigage from crankshaft journal and bearing insert. Proceed with installation.

(9) If bearing-to-journal clearance exceeds the specification, install a pair of 0.0254 mm (0.001 inch) undersize bearing inserts. All the odd size inserts must be on the bottom. The sizes of the service replacement bearing inserts are stamped on the backs of the inserts. Measure the clearance as described in the previous steps.

(10) The clearance is measured with a pair of 0.0254 mm (0.001 inch) undersize bearing inserts installed. This will determine if two 0.0254 mm (0.001 inch) undersize inserts or another combination is needed to provide the correct clearance (refer to Connecting Rod Bearing Fitting Chart).

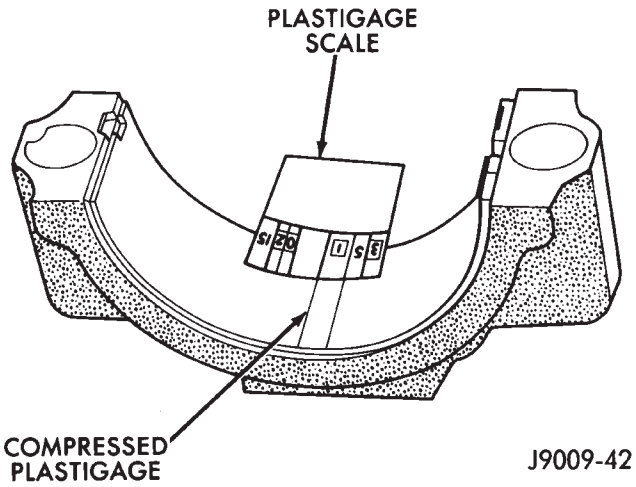

Fig. 7 Measuring Bearing Clearance with Plastigage

FOR EXAMPLE: If the initial clearance was 0.0762 mm (0.003 inch), 0.025 mm (0.001 inch) undersize inserts would reduce the clearance by 0.025 mm (0.001 inch). The clearance would be 0.002 inch and within specification. A 0.051 mm (0.002 inch) undersize insert would reduce the initial clearance an additional 0.013 mm (0.0005 inch). The clearance would then be 0.038 mm (0.0015 inch).

(11) Repeat the Plastigage measurement to verify your bearing selection prior to final assembly.

(12) Once you have selected the proper insert, install the insert and cap. Tighten the connecting rod bolts to 45 N·m (33 ft. lbs.) torque.

CONNECTING ROD BEARING FITTING CHART

Crankshaft Journal		Corresponding Connecting Rod Bearing Insert	
Color Code	Diameter	Upper Insert Size	Lower Insert Size
Yellow	53.2257-53.2079 mm (2.0955-2.0948 in.)	Yellow - Standard	Yellow - Standard
Orange	53.2079-53.1901 mm (2.0948-2.0941 in.) 0.0178 mm (0.0007 in.) Undersize	Yellow - Standard	Blue - Undersize 0.025 mm (0.001 in.)
Blue	53.1901-53.1724 mm (2.0941-2.0934 in.) 0.0356 mm (0.0014 in.) Undersize	Blue - Undersize 0.025 mm (0.001 in.)	Blue - Undersize 0.025 mm (0.001 in.)
Red	52.9717-52.9539 mm (2.0855-2.0848 in.) 0.254 mm (0.010 in.) Undersize	Red - Undersize 0.254 mm (0.010 in.)	Red - Undersize 0.254 mm (0.010 in.)

J9409-24

SIDE CLEARANCE MEASUREMENT

Slide snug-fitting feeler gauge between the connecting rod and crankshaft journal flange. Refer to Engine Specifications for the proper clearance. Replace the connecting rod if the side clearance is not within specification.

PISTON FITTING

BORE GAUGE METHOD

(1) To correctly select the proper size piston, a cylinder bore gauge, Special Tool 6879 or equivalent, capable of reading in .0001″ INCREMENTS with gauge ring Special Tool 6884 is required. If a bore gauge is not available, do not use an inside micrometer.

(2) Set the bore gauge to the gauge ring and zero gauge.

(3) Remove gauge from ring and check cylinder as shown in (Fig. 8) bore and record reading.

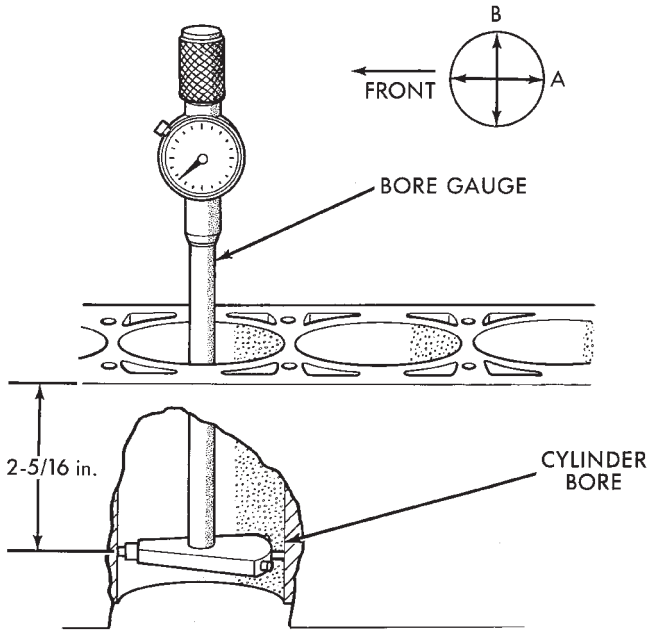

Fig. 8 Bore Gauge

(4) Measure the inside diameter of the cylinder bore at a point 58.725 mm (2-5/16 inches) below top of bore. Start perpendicular (across or at 90 degrees) to the axis of the crankshaft at point B and then take an additional bore reading 90 degrees to that at point A.

(5) Recheck bore gauge in gauge ring, bore gauge should read zero. If gauge does not read zero, reset gauge and start over with procedure.

The coated pistons will be serviced with the piston pin and connecting rod pre-assembled. **The coated piston connecting rod assembly can be used to service previous built engines and MUST be replaced as complete sets.** Tin coated pistons should not be used as replacements for the new coated pistons.

The coating material is applied to the piston after the final piston machining process. Measuring the outside diameter of a coated piston will not provide accurate results. Therefore, measuring the inside diameter of the cylinder bore with a dial Bore Gauge is **MANDATORY**. To correctly select the proper size piston, a cylinder bore gauge capable of reading in .0001″ increments is required.

Piston installation into the cylinder bore requires slightly more pressure than that required for non-coated pistons. The bonded coating on the piston will give the appearance of a line-to-line fit with the cylinder bore.

CYLINDER BORE SIZE	PISTON LETTER SIZE
3.8759 to 3.8763	B
3.8763 to 3.8767	C
3.8767 to 3.8771	D

J9509-92

Fig. 9 Piston Size Chart

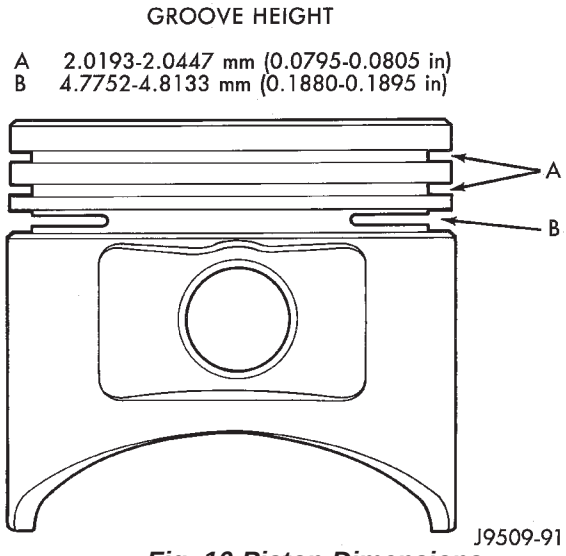

Fig. 10 Piston Dimensions

PISTON PIN

Piston pins are press-fitted into the connecting rods and require no locking device. The piston, piston pin and connecting rod are replaced as an assembly.

PISTON RING FITTING

(1) Carefully clean the carbon from all ring grooves. Oil drain openings in the oil ring groove and pin boss must be clear. DO NOT remove metal from the grooves or lands. This will change ring-to-groove clearances and will damage the ring-to-land seating.

(2) Be sure the piston ring grooves are free of nicks and burrs.

(3) Measure the ring side clearance with a feeler gauge fitted snugly between the ring land and ring (Fig. 10). Rotate the ring in the groove. It must move freely around circumference of the groove.

(4) Place ring in the cylinder bore and push down with inverted piston to position near lower end of the ring travel. Measure ring gap with a feeler gauge fitting snugly between ring ends (Fig. 12). The correct compression ring end gap is 0.25-0.51 mm (0.010-0.020 inch). The correct oil control ring end gap is 0.381-1.397 mm (0.015-0.055 inch).

	Millimeters	Inches
No. 1 Compression	0.025-0.081 (0.043 Preferred)	0.001-0.0032 (0.0017 Preferred)
No. 2 Compression	0.025-0.081 (0.043 Preferred)	0.001-0.0032 (0.0017 Preferred)
Oil Control	0.025-0.241 (0.08 Preferred)	0.001-0.0095 (0.003 Preferred)

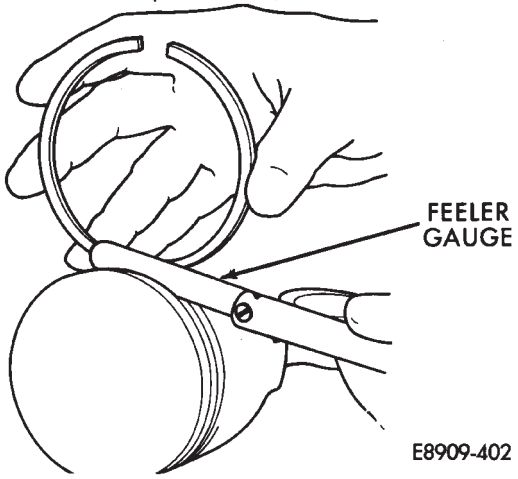

Fig. 11 Ring Side Clearance Measurement

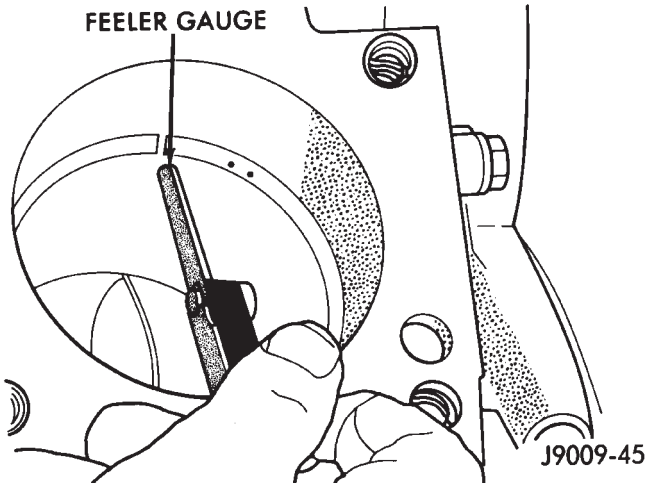

Fig. 12 Ring Gap Measurement

(5) Install the oil control rings according to instructions in the package. It is not necessary to use a tool to install the upper and lower rails. Insert oil rail spacer first, then side rails.

(6) The two compression rings are different and cannot be interchanged. The top ring (Fig. 13) is a moly ring (the scraping edge is gray in color). The second ring (Fig. 14) is a black cast iron ring (the scraping edge is black in color when new). The compression rings may also be identified by 1 or 2 dots on the top surface of the ring (Figs. 13 and 14).

(7) The second compression ring (black cast iron) has a chamfer on the BOTTOM of the inside edge (Fig. 14). This ring may also have 2 dots located on the top surface.

(8) Using a ring installer, install the second compression ring with the chamfer facing down (Fig. 15). The two dots will be facing up.

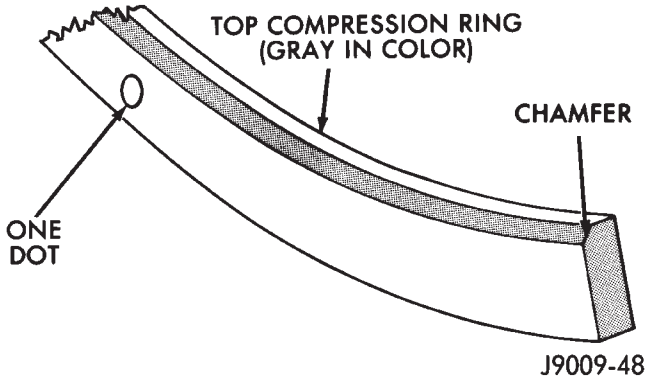

Fig. 13 Top Compression Ring Identification

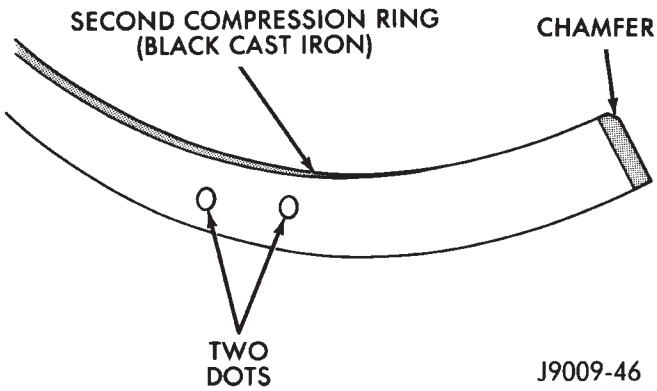

Fig. 14 Second Compression Ring Identification

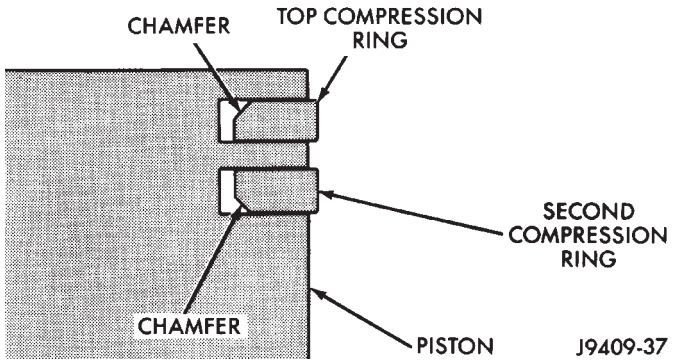

Fig. 15 Compression Ring Chamfer Location

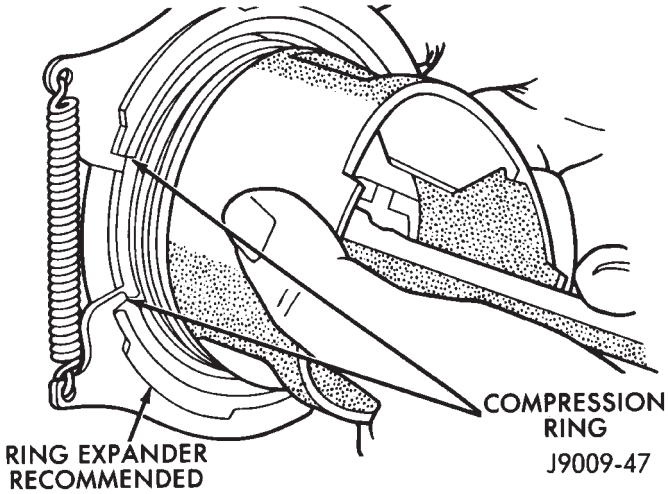

Fig. 16 Compression Ring Installation

(9) The top compression ring (the scraping edge is gray in color) has a chamfer on the TOP of the inside edge (Fig. 16). This ring may also have 1 dot located on the top surface.

(10) Using a ring installer, install the top ring with the chamfer facing up (Fig. 17). The dot will be facing up.

(11) Position the gaps on the piston (Fig. 18):

- Oil spacer - Gap on center line of piston pin bore.
- Oil rails - Gap 180° apart on centerline of piston skirt.
- No. 2 Compression ring - Gap 180° from top oil rail gap.
- No. 1 Compression ring - Gap 180° from No. 2 compression ring gap.

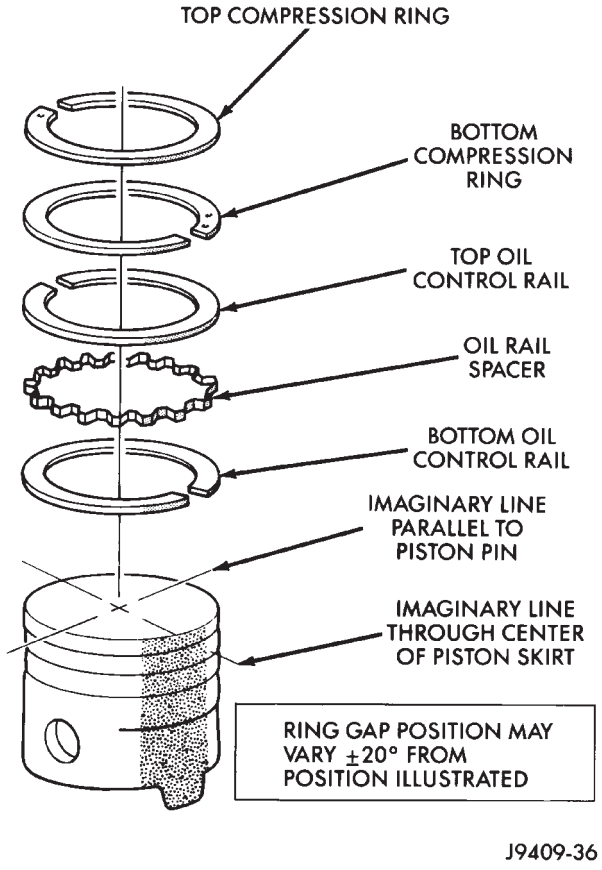

Fig. 18 Ring Gap Position

CLEANING

Clean the cylinder bores thoroughly. Apply a light film of clean engine oil to the bores with a clean lint-free cloth.

INSTALLATION

(1) Install the piston rings on the pistons if removed.

(2) Lubricate the piston and rings with clean engine oil.

CAUTION: Ensure that connecting rod bolts do not scratch the crankshaft journals or cylinder walls. Short pieces of rubber hose slipped over the connecting rod bolts will provide protection during installation.

(3) Use a piston ring compressor to install the connecting rod and piston assemblies through the top of the cylinder bores (Fig. 19).

(4) Ensure the arrow on the piston top points to the front of the engine (Fig. 19).

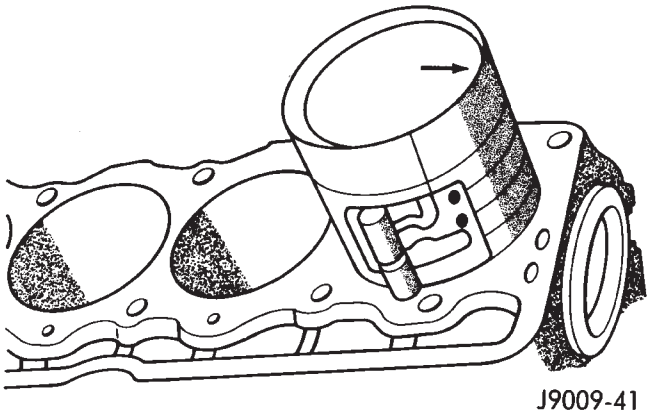

Fig. 19 Rod and Piston Assembly Installation

(5) Raise the vehicle.

Each bearing insert is fitted to its respective journal to obtain the specified clearance between the bearing and the journal. In production, the select fit is obtained by using various-sized, color-coded bearing inserts as listed in the Connecting Rod Bearing Fitting Chart. The color code appears on the edge of the bearing insert. The size is not stamped on inserts used for production of engines.

The rod journal is identified during the engine production by a color-coded paint mark on the adjacent cheek or counterweight toward the flange (rear) end of the crankshaft. The color codes used to indicate journal sizes are listed in the Connecting Rod Bearing Fitting Chart.

When required, upper and lower bearing inserts of different sizes may be used as a pair (refer to Connecting Rod Bearing Fitting Chart). A standard size insert is sometimes used in combination with a 0.025 mm (0.001 inch) undersize insert to reduce clearance 0.013 mm (0.0005 inch).

CAUTION: DO NOT intermix bearing caps. Each connecting rod and bearing cap are stamped with the cylinder number. The stamp is located on a machined surface adjacent to the oil squirt hole that faces the camshaft side of the cylinder block.

(6) Install the connecting rod bearing caps and inserts in the same positions as removed.

CAUTION: Verify that the oil squirt holes in the rods face the camshaft and that the arrows on the pistons face the front of the engine.

(7) Install the oil pan and gaskets as outlined in the installation procedure.
(8) Lower the vehicle.
(9) Install the engine cylinder head, push rods, rocker arms, bridges, pivots and engine cylinder head cover.
(10) Fill the crankcase with engine oil.

CRANKSHAFT MAIN BEARINGS

REMOVAL

(1) Disconnect negative cable from battery.
(2) Remove the spark plugs.
(3) Raise the vehicle.
(4) Remove the oil pan and oil pump.
(5) Remove only one main bearing cap and lower insert at a time (Fig. 1).

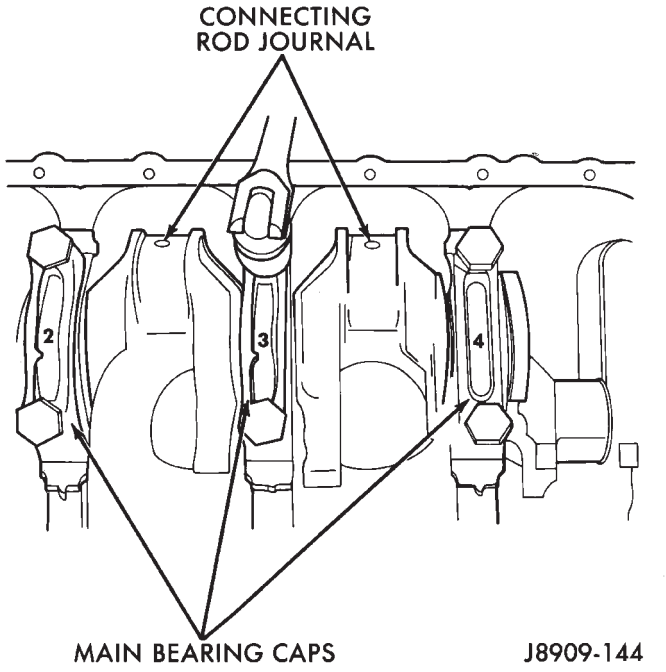

Fig. 1 Removing Main Bearing Caps and Lower Inserts

(6) Remove the lower insert from the bearing cap.
(7) Remove the upper insert by LOOSENING (DO NOT REMOVE) all of the other bearing caps. Now insert a small cotter pin tool in the crankshaft journal oil hole. Bend the cotter pin as illustrated to fabricate the tool (Fig. 2). With the cotter pin tool in place, rotate the crankshaft so that the upper bearing insert will rotate in the direction of its locking tab. Because there is no hole in the No.3 main journal, use a tongue depressor or similar soft-faced tool to remove the bearing insert (Fig. 2). After moving the insert approximately 25 mm (1 inch), it can be removed by applying pressure under the tab.
(8) Using the same procedure described above, remove the remaining bearing inserts one at a time for inspection.

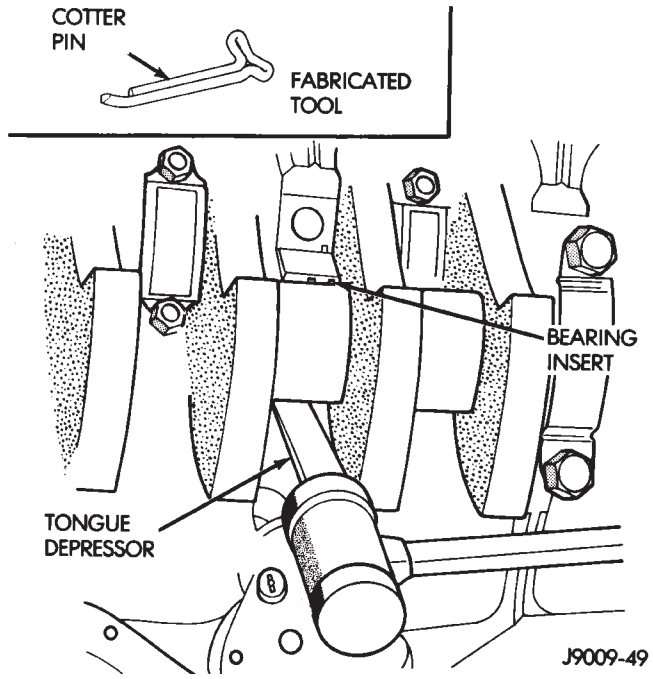

Fig. 2 Removing Upper Inserts

INSPECTION

Wipe the inserts clean and inspect for abnormal wear patterns and for metal or other foreign material imbedded in the lining. Normal main bearing insert wear patterns are illustrated (Fig. 3).

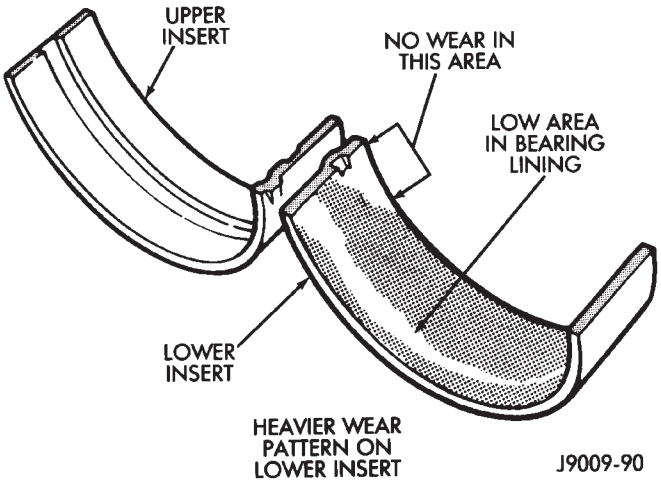

Fig. 3 Main Bearing Wear Patterns

If any of the crankshaft journals are scored, remove the engine for crankshaft repair.

Inspect the back of the inserts for fractures, scrapings or irregular wear patterns.

Inspect the upper insert locking tabs for damage.

Replace all damaged or worn bearing inserts.

FITTING (CRANKSHAFT INSTALLED)

The main bearing caps, numbered (front to rear) from 1 through 5 have an arrow to indicate the forward position. The upper main bearing inserts are grooved to provide oil channels while the lower inserts are smooth.

Each bearing insert pair is selectively fitted to its respective journal to obtain the specified operating clearance. In production, the select fit is obtained by using various-sized color-coded bearing insert pairs as listed in the Main Bearing Fitting Chart. The bearing color code appears on the edge of the insert. **The size is not stamped on bearing inserts used for engine production.**

The main bearing journal size (diameter) is identified by a color-coded paint mark on the adjacent cheek. The rear main journal, is identified by a color-coded paint mark on the crankshaft rear flange.

When required, upper and lower bearing inserts of different sizes may be used as a pair. A standard size insert is sometimes used in combination with a 0.025 mm (0.001 inch) undersize insert to reduce the clearance by 0.013 mm (0.0005 inch). **Never use a pair of bearing inserts with greater than a 0.025 mm (0.001 inch) difference in size (Fig. 4).**

Insert	Correct	Incorrect
Upper	Standard	Standard
Lower	0.025 mm (0.001 in.) Undersize	0.051 mm (0.002 in.) Undersize

J9109-179

Fig. 4 Bearing Insert Pairs

When replacing inserts, the odd size inserts must be either all on the top (in cylinder block) or all on the bottom (in main bearing cap).

Once the bearings have been properly fitted, proceed to Crankshaft Main Bearing—Installation.

BEARING-TO-JOURNAL CLEARANCE (CRANKSHAFT INSTALLED)

When using Plastigage, check only one bearing clearance at a time.

Install the grooved main bearings into the cylinder block and the non-grooved bearings into the bearing caps.

Install the crankshaft into the upper bearings dry.

Place a strip of Plastigage across full width of the crankshaft journal to be checked.

Install the bearing cap and tighten the bolts to 108 N·m (80 ft. lbs.) torque.

DO NOT rotate the crankshaft. This will cause the Plastigage to shift, resulting in an inaccurate reading. Plastigage must not be permitted to crumble. If brittle, obtain fresh stock.

Remove the bearing cap. Determine the amount of clearance by measuring the width of the compressed Plastigage with the scale on the Plastigage envelope (Fig. 5). Refer to Engine Specifications for the proper clearance.

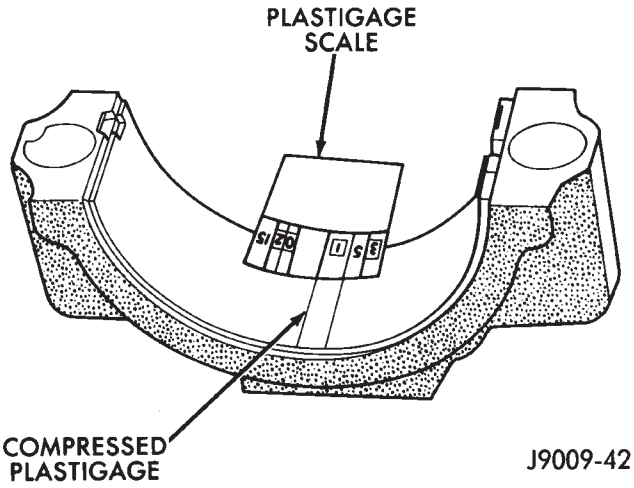

Fig. 5 Measuring Bearing Clearance with Plastigage

Plastigage should indicate the same clearance across the entire width of the insert. If clearance varies, it may indicate a tapered journal or foreign material trapped behind the insert.

If the specified clearance is indicated and there are no abnormal wear patterns, replacement of the bearing inserts is not necessary. Remove the Plastigage from the crankshaft journal and bearing insert. Proceed to Crankshaft Main Bearing—Installation.

If the clearance exceeds specification, install a pair of 0.025 mm (0.001 inch) undersize bearing inserts and measure the clearance as described in the previous steps.

The clearance indicated with the 0.025 mm (0.001 inch) undersize insert pair installed will determine if this insert size or some other combination will provide the specified clearance.

FOR EXAMPLE: If the clearance was 0.0762 mm (0.003 inch) originally, a pair of 0.0254 mm (0.001 inch) undersize inserts would reduce the clearance by 0.0254 mm (0.001 inch). The clearance would then be 0.0508 mm (0.002 inch) and within the specification. A 0.051 mm (0.002 inch) undersize bearing insert and a 0.0254 mm (0.001 inch) undersize insert would reduce the original clearance an additional 0.0127 mm (0.0005 inch). The clearance would then be 0.0381 mm (0.0015 inch).

CAUTION: Never use a pair of inserts that differ more than one bearing size as a pair.

FOR EXAMPLE: DO NOT use a standard size upper insert and a 0.051 mm (0.002 inch) undersize lower insert.

If the clearance exceeds specification using a pair of 0.051 mm (0.002 inch) undersize bearing inserts, measure crankshaft journal diameter with a micrometer. If the journal diameter is correct, the crankshaft bore in the cylinder block may be misaligned, which requires cylinder block replacement or machining to true bore.

If journals 1 through 5 diameters are less than 63.4517 mm (2.4981 inches), replace crankshaft or grind crankshaft down to accept the appropriate undersize bearing inserts.

Once the proper clearances have been obtained, proceed to Crankshaft Main Bearing—Installation.

MAIN BEARING JOURNAL DIAMETER (CRANKSHAFT REMOVED)

Remove the crankshaft from the cylinder block (refer to Cylinder Block - Disassemble).

Clean the oil off the main bearing journal.

Determine the maximum diameter of the journal with a micrometer. Measure at two locations 90° apart at each end of the journal.

The maximum allowable taper and out of round is 0.013 mm (0.0005 inch). Compare the measured diameter with the journal diameter specification (Main Bearing Fitting Chart). Select inserts required to obtain the specified bearing-to-journal clearance.

Once the proper clearances have been obtained, proceed to Crankshaft Main Bearing—Installation.

INSTALLATION

(1) Lubricate the bearing surface of each insert with engine oil.

(2) Loosen all the main bearing caps. Install the main bearing upper inserts.

(3) Install the lower bearing inserts into the main bearing caps.

(4) Install the main bearing cap(s) and lower insert(s).

(5) Clean the rear main bearing cap (No.5) mating surfaces.

(6) Apply Loctite 518, or equivalent on the rear bearing cap (Fig. 6). The bead should be 3 mm (0.125 in) thick. DO NOT apply Loctite 518, or equivalent to the lip of the seal.

(7) Install the rear main bearing cap. DO NOT strike the cap more than twice for proper engagement.

(8) Tighten the bolts of caps 1, 3, 4 and 5 to 54 N·m (40 ft. lbs.) torque. Now tighten these bolts to 95 N·m (70 ft. lbs.) torque. Finally, tighten these bolts to 108 N·m (80 ft. lbs.) torque.

(9) Push the crankshaft forward and backward. Load the crankshaft front or rear and tighten cap bolt No.2 to 54 N·m (40 ft. lbs.) torque. Then tighten

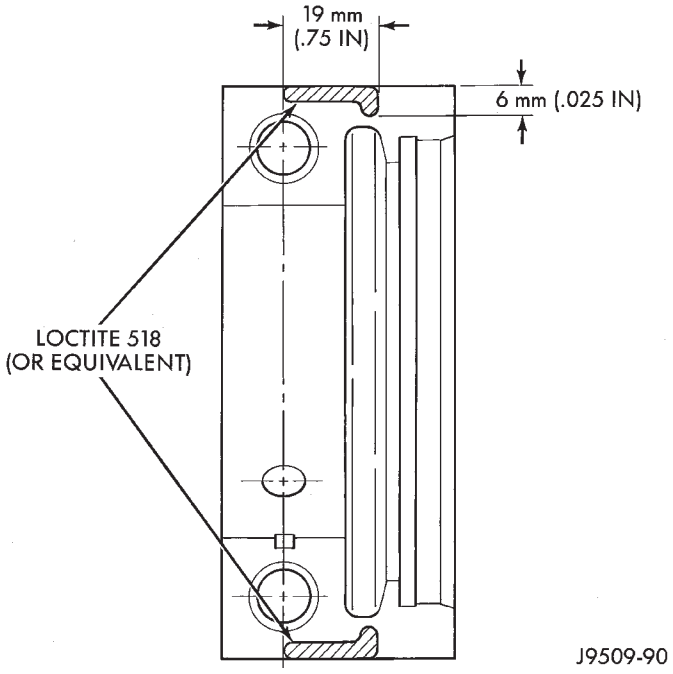

Fig. 6 Location of Loctite 518 (or equivalent)

to 95 N·m (70 ft. lbs.) torque and finally tighten to 108 N·m (80 ft. lbs.) torque.

(10) Rotate the crankshaft after tightening each main bearing cap to ensure the crankshaft rotates freely.

(11) Check crankshaft end play. Crankshaft end play is controlled by the thrust bearing which is flange and installed at the No.2 main bearing position.

(a) Attach a magnetic base dial indicator to the cylinder block at either the front or rear of the engine.

(b) Position the dial indicator rod so that it is parallel to the center line of the crankshaft.

(c) Pry the crankshaft forward, position the dial indicator to zero.

(d) Pry the crankshaft forward and backward. Note the dial indicator readings. End play is the difference between the high and low measurements (Fig. 7). Correct end play is 0.038-0.165 mm (0.0015-0.0065 inch). The desired specifications are 0.051-0.064 mm (0.002-0.0025 inch).

(e) If end play is not within specification, inspect crankshaft thrust faces for wear. If no wear is apparent, replace the thrust bearing and measure end play. If end play is still not within specification, replace the crankshaft.

If the crankshaft was removed, install the crankshaft into the cylinder block (refer to Cylinder Block - Assemble).

(12) Install the oil pan.

MAIN BEARING FITTING CHART

Crankshaft Journals #1 - #4		Corresponding Crankshaft Bearing Insert	
Color Code	Diameter	Upper Insert Size	Lower Insert Size
Yellow	63.5025-63.4898 mm (2.5001-2.4996 in.)	Yellow - Standard	Yellow - Standard
Orange	63.4898-63.4771 mm (2.4996-2.4991 in.) 0.0127 mm (0.0005 in.) Undersize	Blue - Undersize 0.025 mm (0.001 in.)	Yellow - Standard
Blue	63.4771-63.4644 mm (2.4991-2.4986 in.) 0.0254 mm (0.001 in.) Undersize	Blue - Undersize 0.025 mm (0.001 in.)	Blue - Undersize 0.025 mm (0.001 in.)
Green	63.4644-63.4517 mm (2.4986-2.4981 in.) 0.0381 mm (0.0015 in.) Undersize	Blue - Undersize 0.025 mm (0.001 in.)	Green - Undersize 0.051 mm (0.002 in.)
Red	63.2485-63.2358 mm (2.4901-2.4896 in.) 0.254 mm (0.010 in.) Undersize	Red - Undersize 0.254 mm (0.010 in.)	Red - Undersize 0.254 mm (0.010 in.)

Crankshaft Journals #5 Only		Corresponding Crankshaft Bearing Insert	
Color Code	Diameter	Upper Insert Size	Lower Insert Size
Yellow	63.4873-63.4746 mm (2.4995-2.4990 in.)	Yellow - Standard	Yellow - Standard
Orange	63.4746-63.4619 mm (2.4990-2.4985 in.) 0.0127 mm (0.0005 in.) Undersize	Blue - Undersize 0.025 mm (0.001 in.)	Yellow - Standard
Blue	63.4619-63.4492 mm (2.4985-2.4980 in.) 0.0254 mm (0.001 in.) Undersize	Blue - Undersize 0.025 mm (0.001 in.)	Blue - Undersize 0.025 mm (0.001 in.)
Green	63.4492-63.4365 mm (2.4980-2.4975 in.) 0.0381 mm (0.0015 in.) Undersize	Blue - Undersize 0.025 mm (0.001 in.)	Green - Undersize 0.051 mm (0.002 in.)
Red	63.2333-63.2206 mm (2.4895-2.4890 in.) 0.254 mm (0.010 in.) Undersize	Red - Undersize 0.254 mm (0.010 in.)	Red - Undersize 0.254 mm (0.010 in.)

J9409-28

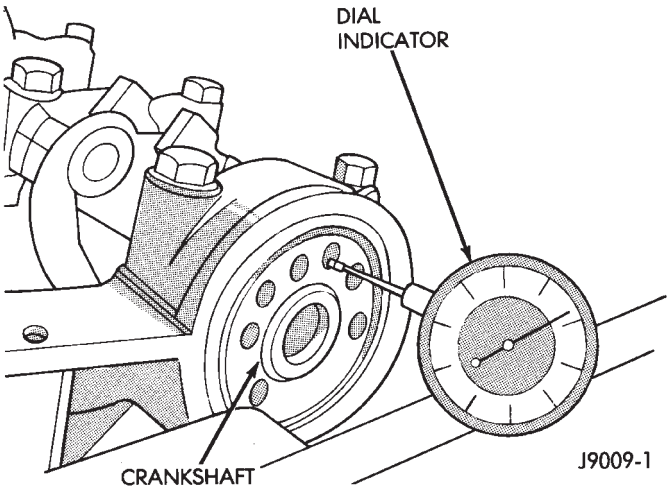

Fig. 7 Crankshaft End Play Measurement

(13) Install the drain plug. Tighten the plug to 34 N·m (25 ft. lbs.) torque.

(14) Lower the vehicle.

(15) Install the spark plugs. Tighten the plugs to 37 N·m (27 ft. lbs.) torque.

(16) Fill the oil pan with engine oil to the full mark on the dipstick level.

(17) Connect negative cable to battery.

REAR MAIN OIL SEALS

REMOVAL

(1) Remove the flywheel or converter drive plate. Discard the old bolts.

(2) Pry out the seal from around the crankshaft flange (Fig. 8).

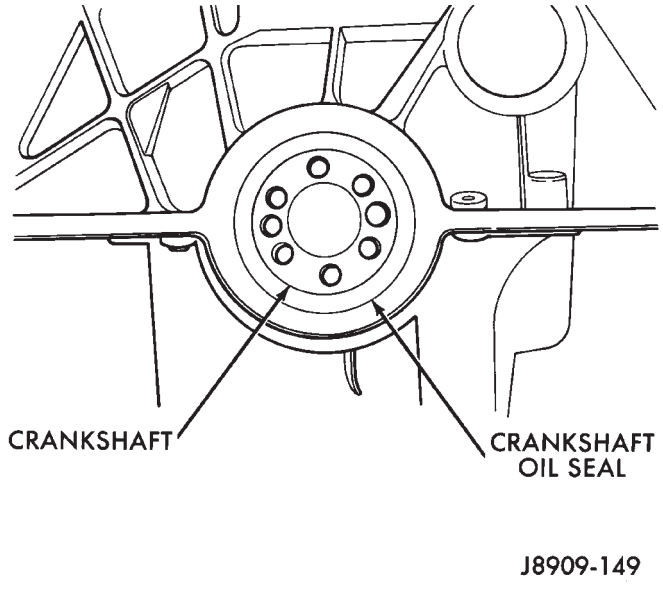

Fig. 8 Replacement of Rear Crankshaft Oil Seal

INSTALLATION

(1) Coat the outer lip of the replacement rear main bearing seal with engine oil.

(2) Carefully position the seal into place. Use rear main Seal Installer Tool 6271 to install the seal flush with the cylinder block.

CAUTION: The felt lip must be located inside the flywheel mounting surface. If the lip is not positioned correctly the flywheel could tear the seal.

(3) Install the flywheel or converter drive plate. New bolts MUST be used when installing the flywheel or converter plate. Tighten the new bolts to 68 N·m (50 ft. lbs.) torque. Turn the bolts an additional 60°.

CYLINDER BLOCK

Remove the Engine Assembly from the vehicle.

DISASSEMBLY

Refer to the applicable sections for detailed instructions.

(1) Drain the engine oil. Remove and discard the oil filter.

(2) Remove the water pump from the cylinder block.

(3) Remove the distributor from the cylinder block.

(4) Remove the vibration damper.

(5) Remove the timing case cover and lay the cover upside down.

(6) Position a drift punch into the slot in the back of the cover and tap the old seal out.

(7) Remove the timing chain bumper.

(8) Remove the oil slinger from crankshaft.

(9) Remove the camshaft retaining bolt and remove the sprockets and chain as an assembly.

(10) Remove the camshaft.

(11) Remove the oil pan and gasket.

(12) Remove the timing chain tensioner.

(13) Remove the front and rear oil galley plugs.

(14) Remove the connecting rods and the pistons. Remove the connecting rod and piston assemblies through the top of the cylinder bores.

(15) Remove the crankshaft.

CLEANING

Thoroughly clean the oil pan and engine block gasket surfaces.

Use compressed air to clean out:

- The galley at the oil filter adaptor hole, the filter bypass hole (Fig. 9).
- The front and rear oil galley holes (Figs. 10 and 11).
- The feed holes for the crankshaft main bearings.

Once the block has been completely cleaned, apply Loctite PST pipe sealant with Teflon 592 to the threads of the front and rear oil galley plugs. Tighten the plugs to 41 N·m (30 ft. lbs.) torque.

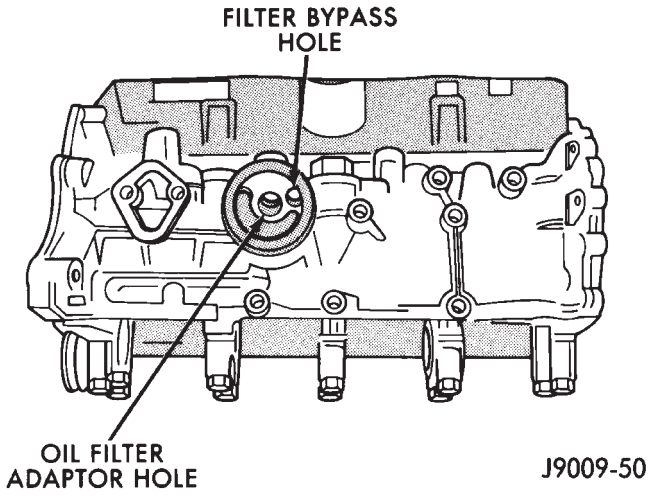

Fig. 9 Oil Filter Adaptor Hole

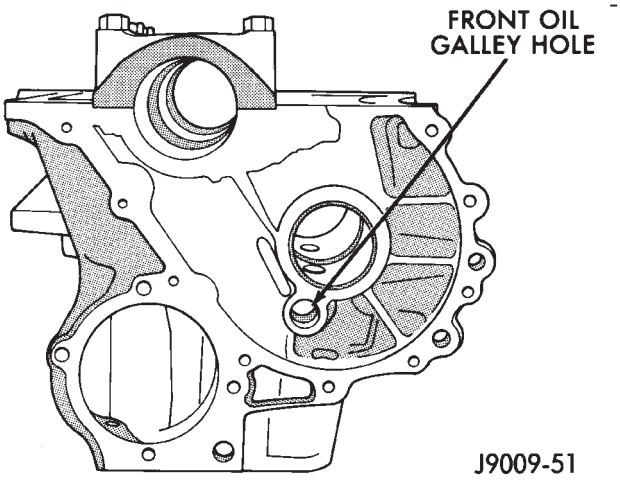

Fig. 10 Front Oil Galley Hole

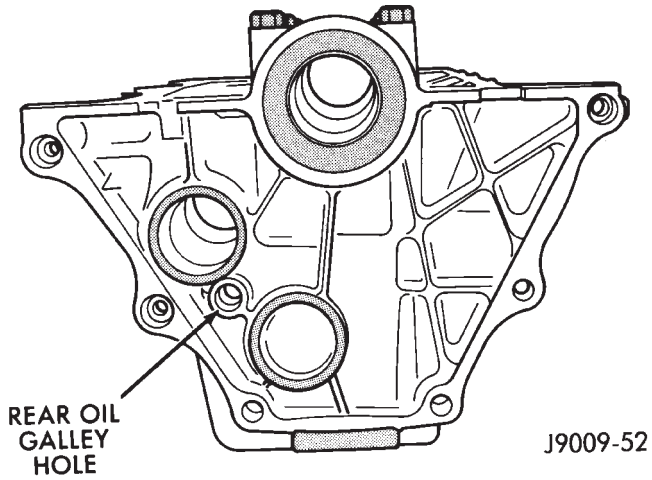

Fig. 11 Rear Oil Galley Hole

INSPECTION—CYLINDER BORE

(1) It is mandatory to use a dial bore gauge to measure each cylinder bore diameter (Fig. 12). To correctly select the proper size piston, a cylinder bore gauge, Special Tool 6879, capable of reading in .0001″ INCREMENTS is required. If a bore gauge is not available, do not use an inside micrometer.

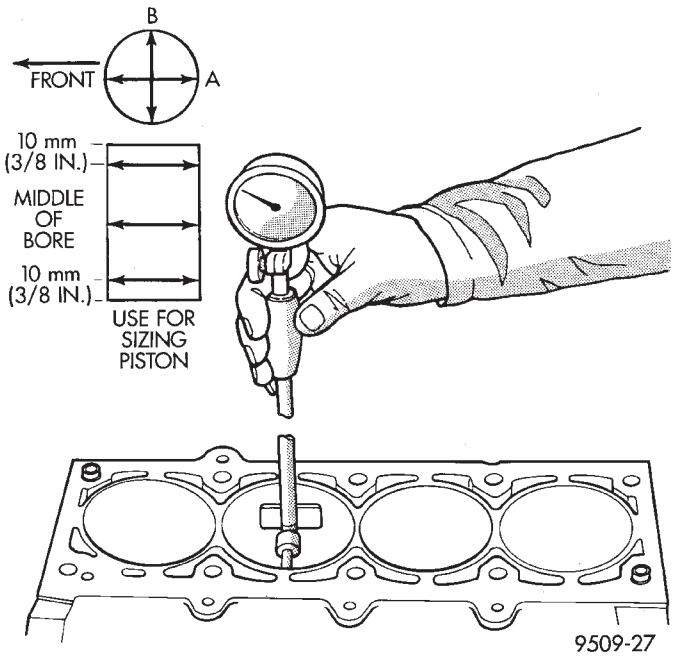

Fig. 12 Cylinder Bore Measurement

(2) Measure the inside diameter of the cylinder bore at three levels below top of bore. Start perpendicular (across or at 90 degrees) to the axis of the crankshaft and then take two additional readings.

(3) Measure the cylinder bore diameter crosswise to the cylinder block near the top of the bore. Repeat the measurement near the middle of the bore, then repeat the measurement near the bottom of the bore.

(4) Determine taper by subtracting the smaller diameter from the larger diameter.

(5) Rotate measuring device 90° and repeat steps above.

(6) Determine out-of-roundness by comparing the difference between each measurement.

(7) If cylinder bore taper does not exceed 0.025 mm (0.001 inch) and out-of-roundness does not exceed 0.025 mm (0.001 inch), the cylinder bore can be honed. If the cylinder bore taper or out-of-round condition exceeds these maximum limits, the cylinder must be bored and then honed to accept an oversize piston. A slight amount of taper always exists in the cylinder bore after the engine has been in use for a period of time.

HONING—CYLINDER BORE

The honing operation should be closely coordinated with the fitting of pistons and rings. This will ensure specified clearances are maintained.

Refer to Standard Service Procedures in the beginning of this Group for the proper honing of cylinder bores.

ASSEMBLY

Refer to the applicable sections for detailed instructions.

(1) Install the crankshaft.
(2) Install the connecting rods and the pistons through the top of the cylinder bores.
(3) Install the front and rear oil galley plugs.
(4) Install the timing chain tensioner.
(5) Install the camshaft.
(6) Install the sprockets and chain as an assembly.
(7) Install the oil slinger to the crankshaft.
(8) Install the timing chain bumper.
(9) Install the timing case cover seal.
(10) Install the timing case cover.
(11) Install the oil pan gasket and oil pan.
(12) Install the vibration damper.
(13) Install the water pump. Tighten the mounting bolts to 31 N·m (270 in. lbs.) torque.
(14) Remove the distributor from the cylinder block.
(15) Lubricate the oil filter seal with clean engine oil. Tighten oil filter to 18 N·m (13 ft. lbs.) torque.
(16) Install the engine into the vehicle.
(17) Fill the engine with clean lubrication oil (refer to Group 0, Lubrication and Maintenance).
(18) Fill the cooling system (refer to Group 7, Cooling System for the proper procedures).

SPECIFICATIONS

ENGINE SPECIFICATIONS

Camshaft

Hydraulic Tappet Clearance	Zero Lash
Bearing Clearance	0.025 - 0.076 mm (0.001 - 0.003 in)
Bearing Journal Diameter	
No.1	51.54 - 51.56 mm (2.029 - 2.030 in)
No.2	51.28 - 51.31 mm (2.019 - 2.020 in)
No.3	51.03 - 51.05 mm (2.009 - 2.010 in)
No.4	50.78 - 50.80 mm (1.999 - 2.000 in)
Base Circle Runout	0.03 mm - max. (0.001 in - max.)
Camshaft Lobe Lift	6.731 mm (0.265 in)
Valve Lift	10.77 mm (0.424 in)
Intake Valve Timing	
Opens	16°BTDC
Closes	74°ABDC
Exhaust Valve Timing	
Opens	60°BBDC
Closes	30°ATDC
Valve Overlap	46°
Intake Duration	270°
Exhaust Duration	270°

Crankshaft

End Play	0.038 - 0.165 mm (0.0015 - 0.0065 in)
Main Bearing Journal Dia	63.489 - 63.502 mm (2.4996 - 2.5001 in)
Main Bearing Journal Width	
No.1	27.58 - 27.89 mm (1.086 - 1.098 in)
No.2	32.28 - 32.33 mm (1.271 - 1.273 in)
No.3-4-5	30.02 - 30.18 mm (1.182 - 1.188 in)
Main Bearing Clearance	0.03 - 0.06 mm (0.001 - 0.0025 in)
Preferred	0.051 mm (0.002 in)
Connecting Rod Journal Dia	53.17 - 53.23 mm (2.0934 - 2.0955 in)
Connecting Rod Journal Width	27.18 - 27.33 mm (1.070 - 1.076 in)
Out-of-Round (Max. All Journals)	0.013 mm (0.0005 in)
Taper (Max. - All Journals)	0.013 mm (0.0005 in)

Cylinder Block

Deck Height	236.73 mm (9.320 in)
Deck Clearance	0.000 mm (0.000 in)
Cylinder Bore Diameter	
Standard	98.45 - 98.48 mm (3.8759 - 3.8775 in)
Taper (Max.)	0.025 mm (0.001 in)
Out-of-Round (Max.)	0.025 mm (0.001 in)
Tappet Bore Diameter	23.000 - 23.025 mm (0.9055 - 0.9065 in)
Flatness	0.03 mm per 25 mm (0.001 in per 1 in) 0.05 mm per 152 mm (0.002 in per 6 in) 0.20 mm - max. for total length (0.008 in - max. for total length)
Main Bearing Bore Dia	68.3514 - 68.3768 mm (2.691 - 2.692 in)

Connecting Rods

Total Weight (Less Bearing)	657 - 665 grams (23.17 - 23.45 oz)
Length (Center-to-Center)	155.52 - 155.62 mm (6.123 - 6.127 in)
Piston Pin Bore Diameter	23.59 - 23.62 mm (0.9288 - 0.9298 in)
Bore (Less Bearings)	56.08 - 56.09 mm (2.2080 - 2.2085 in)
Bearing Clearance	0.025 - 0.076 mm (0.001 - 0.003 in)
Preferred	0.044 - 0.050 mm (0.0015 - 0.0020 in)
Side Clearance.	0.25 - 0.48 mm (0.010 - 0.019 in)
Twist (Max.)	0.001 mm per mm (0.001 in per in)
Bend (Max.)	0.001 mm per mm (0.001 in per in)

Cylinder Compression Pressure

Ratio	9.1:1
Pressure Range	827 - 1 034 kPa (120 - 150 psi)
Max. Variation Between Cylinders	206 kPa (30 psi)

ENGINE SPECIFICATIONS (CONT.)

Cylinder Head

Combustion Chamber	49.9 - 52.9 cc (3.04 - 3.23 cu. in.)
Valve Guide I.D. (Integral)	7.95 - 7.97 mm (0.313 - 0.314 in)
Valve Stem-to-Guide Clearance	0.025 - 0.076 mm (0.001 - 0.003 in)
Intake Valve Seat Angle	44.5°
Exhaust Valve Seat Angle	44.5°
Valve Seat Width	1.02 - 1.52 mm (0.040 - 0.060 in)
Valve Seat Runout	0.064 mm (0.0025 in)
Flatness	0.03 mm per 25 mm (0.001 in per 1 in)
	0.05 mm per 152 mm (0.002 in per 6 in)
	0.20 mm - max. for total length (0.008 in - max. for total length)

Rocker Arms, Push Rods & Tappets

Rocker Arm Ratio	1.6:1
Push Rod Length	241.300 - 241.808 mm (9.500 - 9.520 in)
Push Rod Diameter	7.92 - 8.00 mm (0.312 - 0.315 in)
Hydraulic Tappet Diameter	22.962 - 22.974 mm (0.904 - 0.9045 in)
Tappet-to-Bore Clearance	0.025 - 0.063 mm (0.001 - 0.0025 in)

Valves

Length (Tip - to - Gauge Dimension Line)	
Intake	124.435 - 125.070 mm (4.899 - 4.924 in)
Exhaust	125.120 - 125.755 mm (4.927 - 4.952 in)
Valve Stem Diameter	7.899 - 7.925 mm (0.311 - 0.312 in)
Stem-to-Guide Clearance	0.025 - 0.076 mm (0.001 - 0.003 in)
Valve Head Diameter	
Intake	48.387 - 48.641 mm (1.905 - 1.915 in)
Exhaust	37.973 - 38.227 mm (1.495 - 1.505 in)
Valve Face Angle	
Intake	45°
Exhaust	45°
Tip Refinishing (Max. Allowable)	0.25 mm (0.010 in)

Valve Springs

Free Length (Approx.)	49.962 mm (1.967 in)
Spring Tension	
Valve Closed	360 - 396 N @ 41.656 mm (81 - 89 lbf @ 1.640 in)
Valve Open	845 - 934 N @ 30.886 mm (190 - 210 lbf @ 1.216 in)
Inside Diameter	24.08 - 24.59 mm (0.948 - 0.968 in)

Pistons

Weight (Less Pin)	563 - 567 grams (19.86 - 20.00 oz)
Piston Pin Bore (Centerline-to-Piston Top)	40.61 - 40.72 mm (1.599 - 1.603 in)
Piston-to-Bore Clearance	0.033 - 0.053 mm (0.0013 - 0.0021 in)
Preferred	0.033 - 0.038 mm (0.0013 - 0.0015 in)
Piston Ring Gap Clearance	
Compression Rings	0.25 - 0.51 mm (0.010 - 0.020 in)
Oil Control Steel Rails	0.381 - 1.397 mm (0.015 - 0.055 in)
Piston Ring Side Clearance	
Compression Rings	0.025 - 0.081 mm (0.001 - 0.0032 in)
Preferred	0.025 mm (0.001 in)
Oil Control Ring	0.025 - 0.216 mm (0.001 - 0.0085 in)
Preferred	0.08 mm (0.003 in)
Piston Ring Groove Height	
Compression Rings	2.019 - 2.045 mm (0.0795 - 0.0805 in)
Oil Control Ring	4.78 - 4.80 mm (0.1880 - 0.1895 in)
Piston Ring Groove Diameter	
Compression Rings	87.78 - 87.90 mm (3.456 - 3.461 in)
Oil Control Ring	87.50 - 87.75 mm (3.445 - 3.455 in)
Piston Pin Bore Diameter	23.647 - 23.655 mm (0.9310 - 0.9313 in)
Piston Pin Diameter	23.637 - 23.640 mm (0.9306 - 0.9307 in)
Piston-to-Pin Clearance	0.0076 - 0.0178 mm (0.0003 - 0.0007 in)
Preferred	0.015 mm - Loose (0.0006 in - Loose)
Piston-to-Pin Connecting Rod (Press Fit)	8.9 kN (2000 lb f)

ENGINE SPECIFICATIONS (CONT.)

Oil Pump

Gear-to-Body Clearance (Radial) .....0.051 - 0.102 mm
(0.002 - 0.004 in)
Preferred..... 0.051 mm
(0.002 in)
Gear End Clearance
Plastigage.....0.051 - 0.152 mm
(0.002 - 0.006 in)
Preferred..... 0.051 mm
(0.002 in)
Feeler Gauge.....0.1016 - 0.2032 mm
(0.004 - 0.008 in)
Preferred..... 0.1778 mm
(0.007 in)

Oil Pressure

Min. Pressure (600 rpm)..... 89.6 kPa
(13 psi)
At Idle Speed (800 rpm).....172 - 241 kPa
(25 - 35 psi)
At 1600 rpm & higher .....255 - 517 kPa
(37 - 75 psi)
Oil Pressure Relief .....517 kPa
(75 psi)

J9409-31

TORQUE SPECIFICATIONS

Description	Torque
A/C Compressor Bracket-to-Engine Bolts	34 N•m (25 ft. lbs.)
A/C Compressor Mounting Bolts	27 N•m (20 ft. lbs.)
A/C Low Pressure Service Valve Nut	38 N•m (28 ft. lbs.)
Block Heater Nut	1.8 N•m (16 in. lbs.)
Camshaft Sprocket Bolt	108 N•m (80 ft. lbs.)
Connecting Rod Nuts	45 N•m (33 ft. lbs.)
Converter Plate Bolts	68 N•m (50 ft. lbs.) +60° (+60°)
Cylinder Block Drain Plugs	41 N•m (30 ft. lbs.)
Cylinder Head Bolts (#1–10 & #12–14)	149 N•m (110 ft. lbs.)
(#11)	135 N•m (100 ft. lbs.)
Cylinder Head Cover Bolts	13 N•m (115 in. lbs.)
Drive Plate-to-Torque Converter Bolts	54 N•m (40 ft. lbs.)
Engine Shock Damper Stud Nuts	23 N•m (17 ft. lbs.)
Engine Mounts—Front	
Engine Support Bracket Bolts (XJ)	61 N•m (45 ft. lbs.)
Stud Nuts (XJ—Right Side)	46 N•m (34 ft. lbs.)
Bolts (YJ)	62 N•m (46 ft. lbs.)
Support Cushion Nuts (XJ—Right Side)	65 N•m (48 ft. lbs.)
Bolts/Nuts (XJ—Left Side)	41 N•m (30 ft. lbs.)
Bolts/Nuts (YJ)	52 N•m (38 ft. lbs.)
Support Cushion Bracket—(XJ) Bolts	54 N•m (40 ft. lbs.)
Stud Nuts	41 N•m (30 ft. lbs.)
Support Cushion Thru-Bolt XJ Vehicles	65 N•m (48 ft. lbs.)
YJ Vehicles	69 N•m (51 ft. lbs.)
Engine Mount—Rear	
Crossmember-to-Sill Bolts (XJ-Automatic)	41 N•m (30 ft. lbs.)
Skid Plate/Support Cushion Stud Nuts (YJ)	54 N•m (40 ft. lbs.)
Skid Plate-to-Sill Bolts (YJ)	88 N•m (65 ft. lbs.)
Support Cushion/Crossmember Nuts (XJ)	22 N•m (192 in. lbs.)
Support Cushion/Support Bracket Nuts (XJ Manual)	46 N•m (34 ft. lbs.)
Support Cushion/Torque Arm Bracket Nuts (YJ-Automatic)	54 N•m (40 ft. lbs.)
Torque Arm Bracket Bolts (YJ-Automatic)	54 N•m (40 ft. lbs.)

Description	Torque
Engine Mount—Rear (Cont.)	
Torque Arm Bracket/Support Cushion Bolts (YJ-Manual)	54 N•m (40 ft. lbs.)
Transmission Support Bracket Bolts (XJ-Manual)	43 N•m (32 ft. lbs.)
Transmission Support Bracket/Support Cushion Bolts (XJ 4WD Automatic)	75 N•m (55 ft. lbs.)
Transmission Support Adaptor Bracket Bolts (XJ 2WD Auto)	75 N•m (55 ft. lbs.)
Exhaust Manifold/Pipe Nuts	27 N•m (20 ft. lbs.)
Flywheel/Converter Housing Bolts	38 N•m (28 ft. lbs.)
Flywheel/Crankshaft Bolts	143 N•m (105 ft. lbs.)
Front Cover-to-Block Bolts (1/4-20)	7 N•m (60 in. lbs.)
Front Cover-to-Block Bolts (5/16-18)	22 N•m (192 in. lbs.)
Fuel Pump Bolts	22 N•m (16 ft. lbs.)
Generator Adjusting Bolt	24 N•m (18 ft. lbs.)
Generator Pivot Bolt/Nut	38 N•m (28 ft. lbs.)
Generator Mounting Bracket-to-Engine Bolts	38 N•m (28 ft. lbs.)
Generator Mounting/Head Bolts	45 N•m (33 ft. lbs.)
Main Bearing Bolts	108 N•m (80 ft. lbs.)
Oil Filter	18 N•m (13 ft. lbs.)
Oil Filter Connector	54 N•m (40 ft. lbs.)
Oil Galley Plug	41 N•m (30 ft. lbs.)
Oil Pan Bolts (1/4-20)	14 N•m (129 in. lbs.)
(5/16-18)	18 N•m (156 in. lbs.)
Oil Pan Drain Plug	34 N•m (25 ft. lbs.)
Oil Pump Attaching Bolts Short Bolts	14 N•m (10 ft. lbs.)
Long Bolts	23 N•m (17 ft. lbs.)
Oil Pump Cover Bolts	8 N•m (70 in. lbs.)
Power Steering Pump Pressure Hose Nut	52 N•m (38 ft. lbs.)
Rocker Arm Assembly-to-Cylinder Head Capscrews	28 N•m (21 ft. lbs.)
Spark Plugs	37 N•m (27 ft. lbs.)
Starting Motor Mounting Bolts	45 N•m (33 ft. lbs.)
Thermostat Housing	18 N•m (13 ft. lbs.)
Vibration Damper Bolts	108 N•m (80 ft. lbs.)
Water Pump/Block Bolts	31 N•m (270 in. lbs.)

J9509-83

4.0L ENGINE SERVICE PROCEDURES

INDEX

	page		page
Camshaft	74	Rocker Arms and Push Rods	65
Camshaft Pin Replacement	75	Timing Case Cover	72
Engine Assembly—XJ Vehicles	59	Timing Case Cover Oil Seal Replacement	73
Engine Assembly—YJ Vehicles	62	Timing Chain and Sprockets	73
Engine Cylinder Head	67	Valve Component Replace—Cylinder Head Not Removed	65
Engine Cylinder Head Cover	64	Valve Stem Seal and Spring Replacement	65
Engine Mount—Rear	57	Valve Timing	71
Engine Mounts—Front	56	Valves and Valve Springs	69
General Information	55	Vibration Damper	72
Hydraulic Tappets	66		
Oil Pan	77		

GENERAL INFORMATION

The 4.0 Liter (242 CID) six-cylinder engine is an In-line, lightweight, overhead valve engine (Fig. 1).

Engine Type	In-line 6 Cylinder
Bore and Stroke	98.4×87.4mm (3.88×3.44 in.)
Displacement	4.0L (242 cu. in.)
Compression Ratio	8.7:1
Torque	
(XJ Vehicles)	305 N·m (225 ft. lbs.) @ 4000 rpm
(YJ Vehicles)	298 N·m (220 ft. lbs.) @ 4000 rpm
Firing Order	1–5–3–6–2–4
Lubrication	Pressure Feed—Full Flow Filtration
Engine Oil Capacity	5.7L (6 Quarts)
Cooling System	Liquid Cooled—Forced Circulation
Cooling System Capacity	
(XJ Vehicles)	11.4L (12 Quarts)
(YJ Vehicles)	9.9L (10.5 Quarts)
Cylinder Block	Cast Iron
Crankshaft	Cast Nodular Iron
Cylinder Head	Cast Iron
Camshaft	Cast Iron
Pistons	Aluminum Alloy (with Struts)
Pistons Combustion Cavity	Double Quench
Connecting Rods	Cast Iron

J9409-22

Fig. 1 Engine Description

This engine is designed for unleaded fuel.

The engine cylinder head has dual quench-type combustion chambers that create turbulence and fast burning of the air/fuel mixture. This results in good fuel economy.

The cylinders are numbered 1 through 6 from front to rear. The firing order is 1-5-3-6-2-4 (Fig. 2).

The crankshaft rotation is clockwise, when viewed from the front of the engine. The crankshaft rotates within seven main bearings. The camshaft rotates within four bearings.

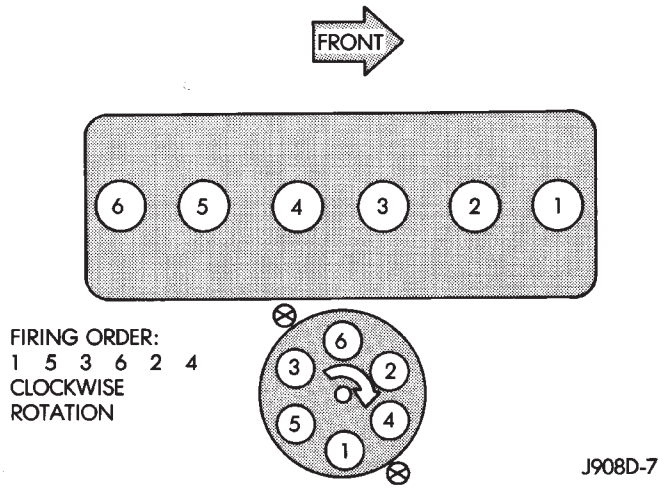

Fig. 2 Engine Firing Order

BUILD DATE CODE

The engine Build Date Code is located on a machined surface on the right side of the cylinder block between the No.2 and No.3 cylinders (Fig. 3).

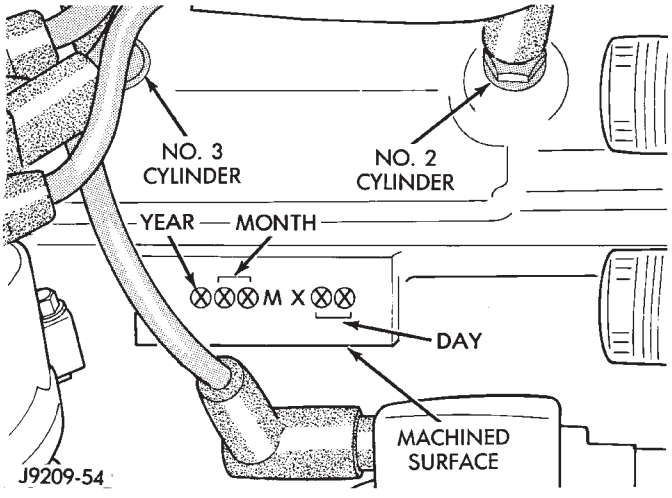

Fig. 3 Build Date Code Location

The digits of the code identify:

(1) 1st Digit—The year (4 = 1994).

(2) 2nd & 3rd Digits—The month (01 - 12).

(3) 4th & 5th Digits—The engine type/fuel system/compression ratio (MX = A 4.0 Liter (242 CID) 8.7:1 compression ratio engine with a multi-point fuel injection system).

(4) 6th & 7th Digits—The day of engine build (01 - 31).

FOR EXAMPLE: Code * 401MX12 * identifies a 4.0 Liter (242 CID) engine with a multi-point fuel injection system, 8.7:1 compression ratio and built on January 12, 1994.

OVERSIZE AND UNDERSIZE COMPONENT CODES

Some engines may be built with oversize or undersize components such as:

- Oversize cylinder bores.
- Oversize camshaft bearing bores.
- Undersize crankshaft main bearing journals.
- Undersize connecting rod journals.

These engines are identified by a letter code (Fig. 4) stamped on a boss between the ignition coil and the distributor (Fig. 5).

CODE	COMPONENT	UNDERSIZE
P	One or more connecting rod bearing journals	0.254 mm (0.010 in)
M	All crankshaft main bearing journals	0.254 mm (0.010 in)
PM	All crankshaft main bearing journals and one or more connecting rod journals	0.254 mm (0.010 in)
CODE	**COMPONENT**	**OVERSIZE**
B	All cylinder bores	0.254 mm (0.010 in)
C	All camshaft bearing bores	0.254 mm (0.010 in)

J8909-54

Fig. 4 Oversize and Undersize Component Codes

ENGINE MOUNTS—FRONT

The front mounts support the engine at each side. These supports are made of resilient rubber.

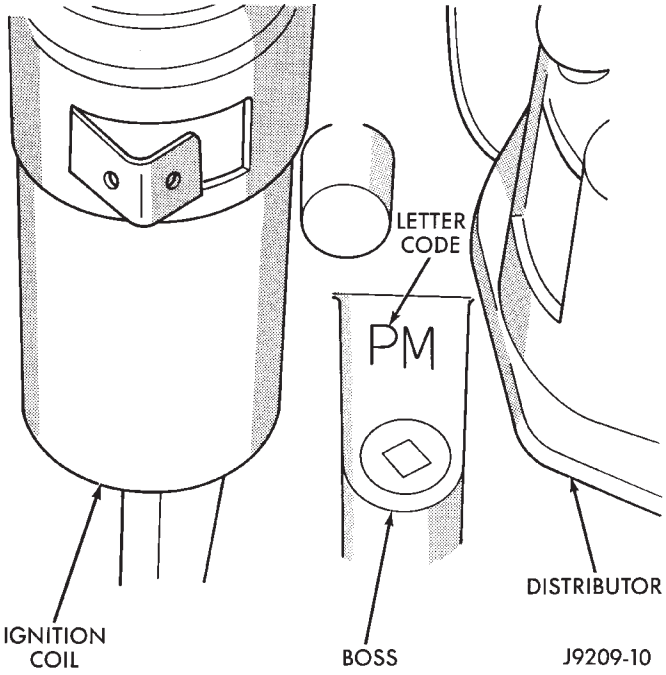

Fig. 5 Oversize and Undersize Component Code Location

REMOVAL

(1) Disconnect negative cable from battery.

(2) Raise the vehicle.

(3) Support the engine.

(4) Remove the nut from the through bolt (Figs. 6 and 7). DO NOT remove the through bolt.

(5) Remove the retaining bolts and nuts from the support cushions (Figs. 6 and 7).

(6) Remove the through bolt.

(7) Remove the support cushions.

INSTALLATION

(1) If the engine support bracket was removed, position the bracket onto the block and install the attaching bolts (Figs. 6 and 7). Tighten the engine support bracket bolts:

- XJ Vehicles—61 N·m (45 ft. lbs.) torque.
- YJ Vehicles—62 N·m (46 ft. lbs.) torque.

(2) ON XJ VEHICLES, if the support cushion bracket was removed, position the bracket onto the lower front sill (Fig. 8). Install support cushion bracket bolts and nuts. Tighten the bolts to 54 N·m (40 ft. lbs.) torque. Tighten the nuts to 41 N·m (30 ft. lbs.) torque.

(3) Place the support cushion into position on the support cushion bracket (Figs. 6 and 7). Install and tighten the bolts and nuts:

- XJ Vehicles—41 N·m (30 ft. lbs.) torque.
- YJ Vehicles—52 N·m (38 ft. lbs.) torque.

(4) Install the through bolt and the retaining nut (Figs. 6 and 7). Tighten the through bolt nut:

- XJ Vehicles—65 N·m (48 ft. lbs.) torque.
- YJ Vehicles—69 N·m (51 ft. lbs.) torque.

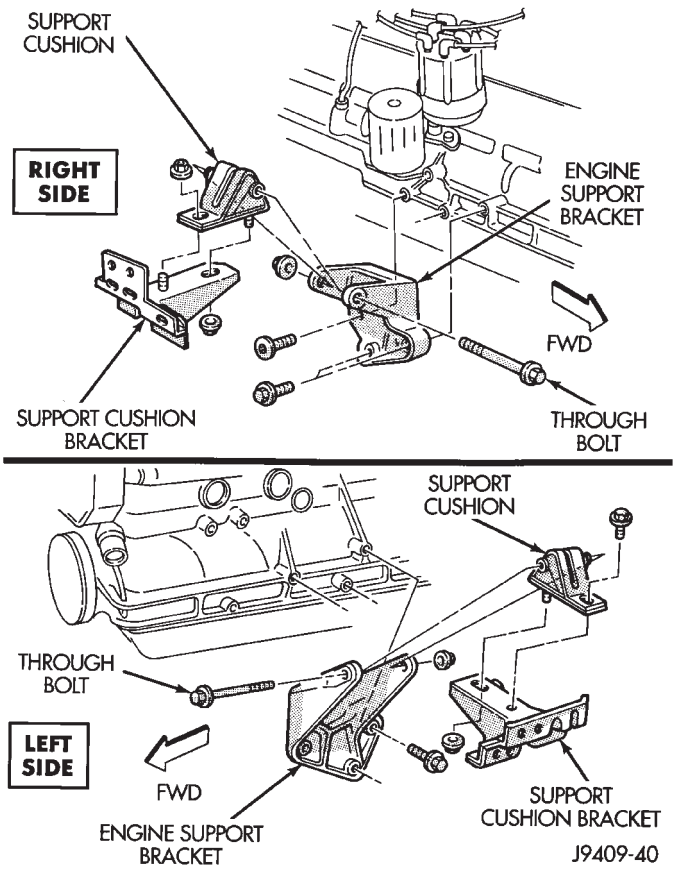

Fig. 6 Front Mounts—XJ Vehicles

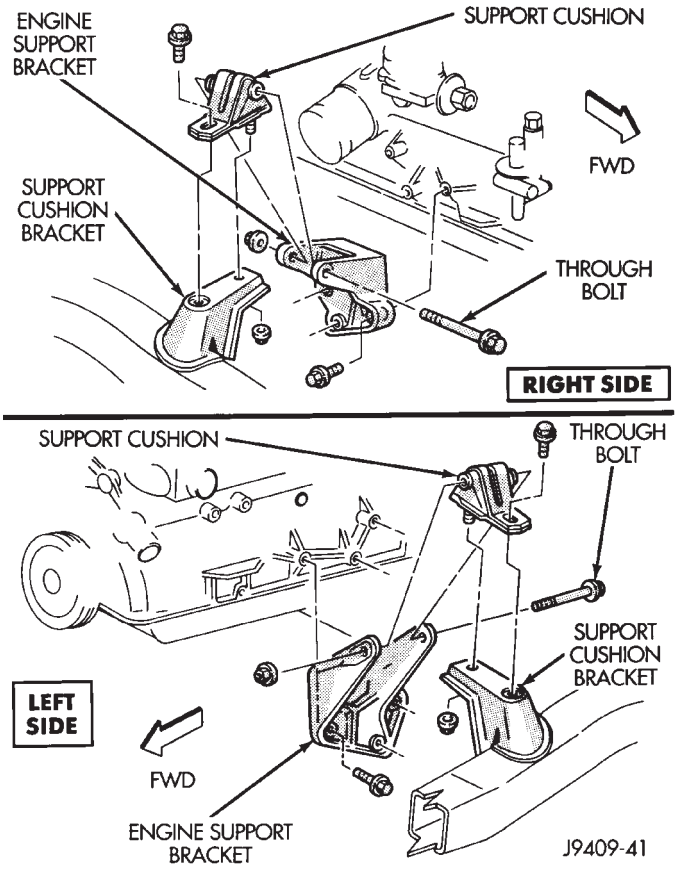

Fig. 7 Front Mounts—YJ Vehicles

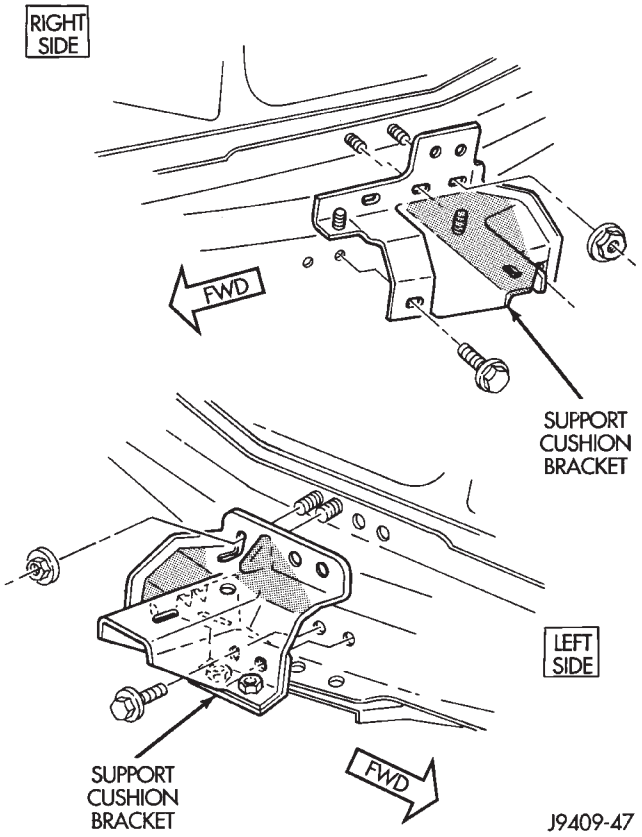

Fig. 8 Support Cushion Bracket—XJ Vehicles

(5) Remove the engine support.
(6) Lower the vehicle.
(7) Connect negative cable to battery.

ENGINE MOUNT—REAR

A resilient rubber cushion supports the transmission at the rear between the transmission extension housing and the rear support crossmember or skid plate.

REMOVAL—XJ VEHICLES

(1) Disconnect negative cable from battery.
(2) Raise the vehicle and support the transmission.
(3) Remove the nuts holding the support cushion to the crossmember (Figs. 9 and 10). Remove the crossmember.
(4) **MANUAL TRANSMISSION (Fig. 9):**
(a) Remove the support cushion nuts and remove the cushion.
(b) Remove the transmission support bracket bolts and remove the bracket from the transmission.
(5) **AUTOMATIC TRANSMISSION (Fig. 10):**
(a) Remove the support cushion bolts and remove the cushion and the support bracket from the transmission (4WD) or from the adaptor bracket (2WD).

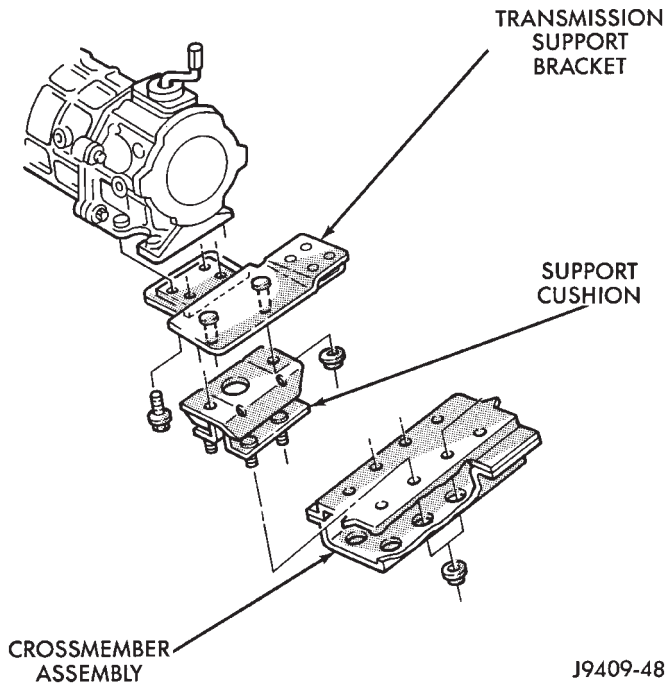

Fig. 9 Rear Mount—XJ Vehicles (Manual Transmission)

(b) On 2WD vehicles, remove the bolts holding the transmission support adaptor bracket to the transmission (Fig. 10). Remove the adaptor bracket.

INSTALLATION—XJ VEHICLES

(1) **MANUAL TRANSMISSION:**

(a) Install the transmission support bracket to the transmission. Install the bolts and tighten to 46 N·m (34 ft. lbs.) torque.

(b) Install the support cushion to the support bracket. Install the nuts and tighten to 75 N·m (55 ft. lbs.) torque.

(2) **AUTOMATIC TRANSMISSION:**

(a) On 2WD vehicles, position the transmission support adaptor bracket to the transmission. Install the bolts and tighten to 75 N·m (55 ft. lbs.) torque.

(b) Position the transmission support bracket and support cushion to the adaptor bracket (2WD) or the transmission (4WD). Install the bolts and tighten to 75 N·m (55 ft. lbs.) torque.

(3) Position the crossmember onto the support cushion studs. Install the stud nuts and tighten to 22 N·m (192 in. lbs) torque.

(4) Install crossmember-to-sill bolts and tighten to 41 N·m (30 ft. lbs.) torque.

(5) Remove the transmission support.

(6) Lower the vehicle.

(7) Connect negative cable to battery.

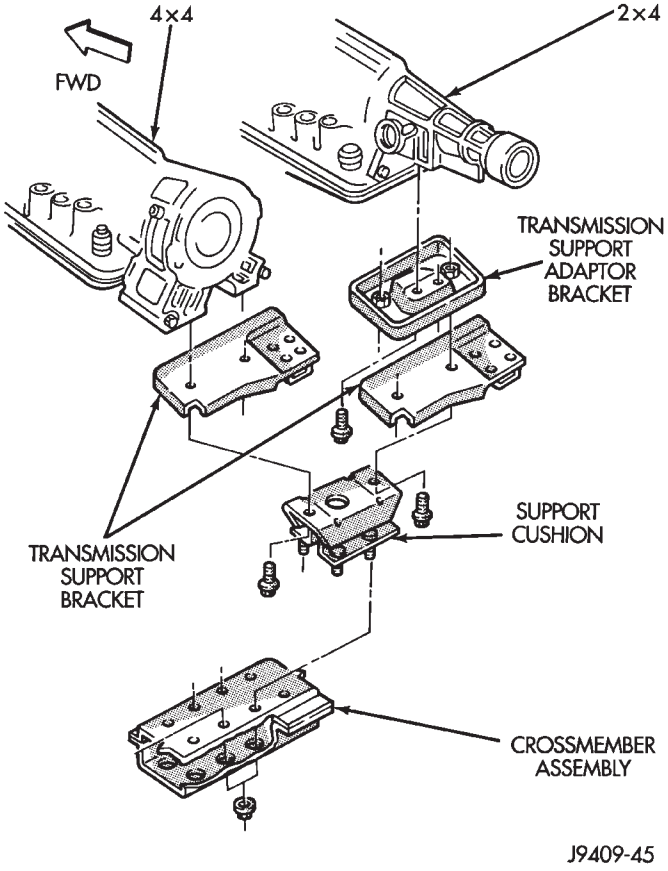

Fig. 10 Rear Mount—XJ Vehicles (Automatic Transmission)

REMOVAL—YJ VEHICLES

(1) Disconnect negative cable from battery.

(2) Raise the vehicle and support the transmission.

(3) **MANUAL TRANSMISSION (Fig. 11):**

(a) Remove the nuts holding the support cushion and the insulator to the skid plate. Remove the upper nut from the insulator stud.

(b) Remove the skid plate bolts and the skid plate. Remove the insulator stud assembly.

(c) Remove the support cushion nuts. Remove the support cushion from the torque arm bracket.

(d) Remove the torque arm bracket bolts and remove the bracket from the transmission.

(4) **AUTOMATIC TRANSMISSION (Fig. 12):**

(a) Remove the nuts holding the support cushion to the skid plate. Remove the skid plate.

(b) Remove the bolts and nuts holding the support cushion to the torque arm bracket. Remove the support cushion.

(c) Remove the bolts holding the torque arm bracket to the transmission. Remove the torque arm bracket.

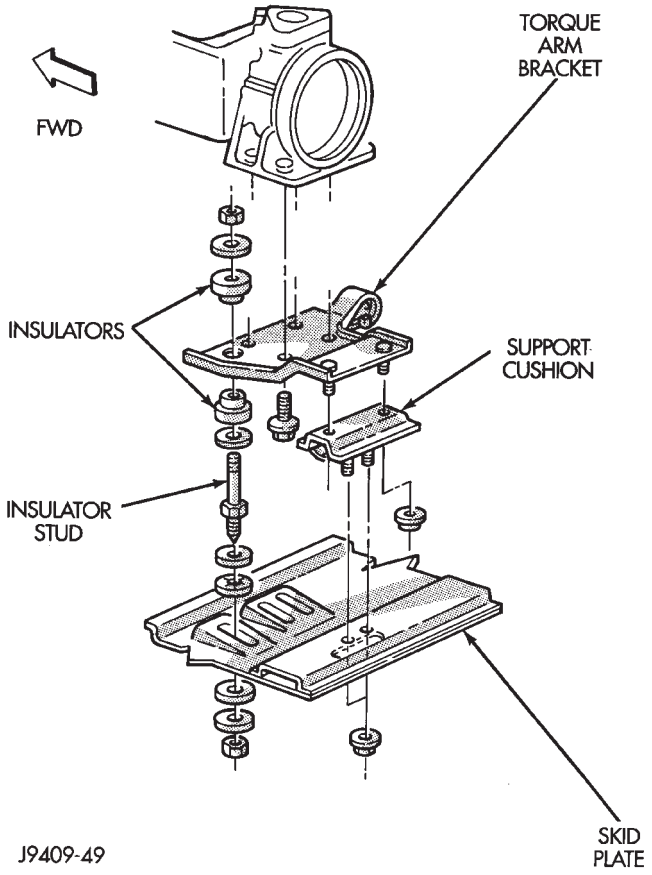

Fig. 11 Rear Mount—YJ Vehicles (Manual Transmission)

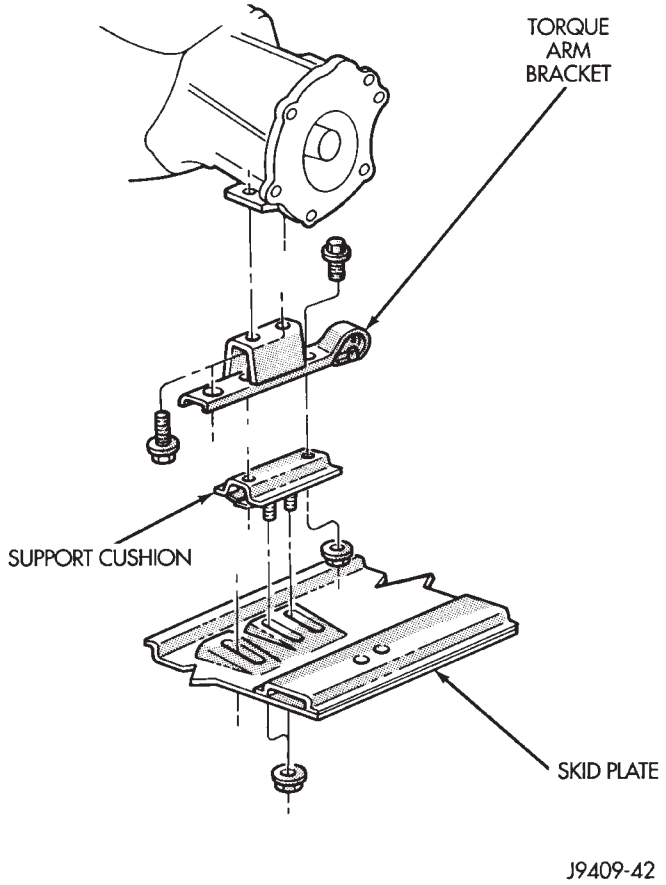

Fig. 12 Rear Mount—YJ Vehicles (Automatic Transmission)

INSTALLATION—YJ VEHICLES

(1) **MANUAL TRANSMISSION:**

(a) Position the torque arm bracket to the transmission. Install the bolts and tighten to 54 N·m (40 ft. lbs.) torque.

(b) Position the support cushion onto the torque arm bracket. Install the nuts and tighten to 54 N·m (40 ft. lbs.) torque.

(c) Position the insulator stud assembly and upper nut (Fig. 11). Position the skid plate to the studs of the support cushion and the insulator stud (Fig. 11). Install the support cushion stud nuts and tighten to 54 N·m (40 ft. lbs.) torque. Install the lower stud nut and tighten the upper and lower insulator stud nuts to 41 N·m (30 ft. lbs.) torque.

(2) **AUTOMATIC TRANSMISSION:**

(a) Position the torque arm bracket to the transmission. Install the bolts and tighten to 54 N·m (40 ft. lbs.) torque.

(b) Position the support cushion onto the torque arm bracket. Install the bolts and nuts and tighten to 54 N·m (40 ft. lbs.) torque.

(c) Position the skid plate to the studs of the support cushion and install the nuts. Tighten the support cushion stud nuts to 54 N·m (40 ft. lbs.) torque.

(3) Install the skid plate bolts to the sill and tighten to 88 N·m (65 ft. lbs.) torque.

(4) Remove the transmission support.

(5) Lower the vehicle.

(6) Connect negative cable to battery.

ENGINE ASSEMBLY—XJ VEHICLES

REMOVAL

(1) Disconnect the battery cables. Remove the battery.

(2) Mark the hinge locations on the hood panel for alignment reference during installation. Remove the engine compartment lamp. Remove the hood.

WARNING: THE COOLANT IN A RECENTLY OPERATED ENGINE IS HOT AND PRESSURIZED. USE CARE TO PREVENT SCALDING BY HOT COOLANT. CAREFULLY RELEASE THE PRESSURE BEFORE REMOVING THE RADIATOR DRAIN COCK AND CAP.

(3) Remove the radiator drain cock and radiator cap to drain the coolant. DO NOT waste usable coolant. If the solution is clean, drain the coolant into a clean container for reuse.

(4) Remove the lower radiator hose.

(5) Remove the upper radiator hose and coolant recovery hose (Fig. 13).

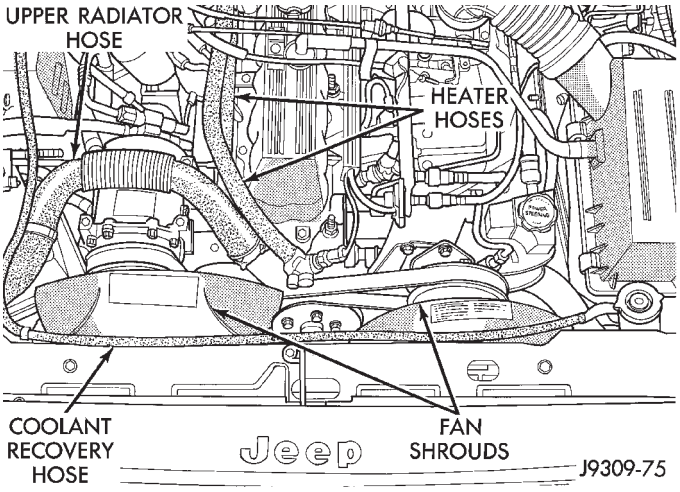

Fig. 13 Upper Radiator Hose, Coolant Recovery Hose, Fan Shroud & Heater hoses

(6) Remove upper radiator support retaining bolts and remove radiator support.

(7) Remove the fan shroud (Fig. 13) and electric cooling fan.

(8) Disconnect the transmission fluid cooler tubing (automatic transmission).

(9) Disconnect radiator fan switch wire connector.

(10) **Vehicles with Air Conditioning:**

(a) Discharge the A/C condenser.

(b) Remove the service valves and cap the compressor ports.

(11) Remove the radiator or radiator and condenser (if equipped with A/C).

(12) Remove the fan assembly from the idler pulley.

(13) Disconnect the heater hoses at the engine thermostat housing and water pump (Figs. 13 and 14).

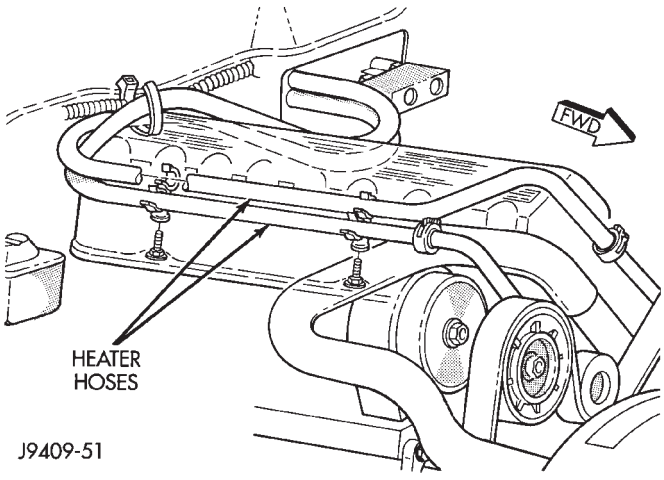

Fig. 14 Heater Hoses (RH Drive Vehicle)

(14) Disconnect the throttle linkages (Fig. 15).

(15) Disconnect the speed control cable (if equipped)—(Fig. 15).

(16) Disconnect the line pressure cable (if equipped with automatic transmission).

(17) Disconnect injection system wire harness connector at the dash panel.

(18) Disconnect the distributor electrical connection and the oil pressure switch connector.

(19) Perform the Fuel System Pressure Release procedure (refer to Group 14, Fuel System).

(20) Disconnect the quick-connect fuel lines at the fuel rail and return line by squeezing the two retaining tabs against the fuel tube (Fig. 15). Pull the fuel tube and retainer from the quick-connect fitting (refer to Group 14, Fuel System for the proper procedure).

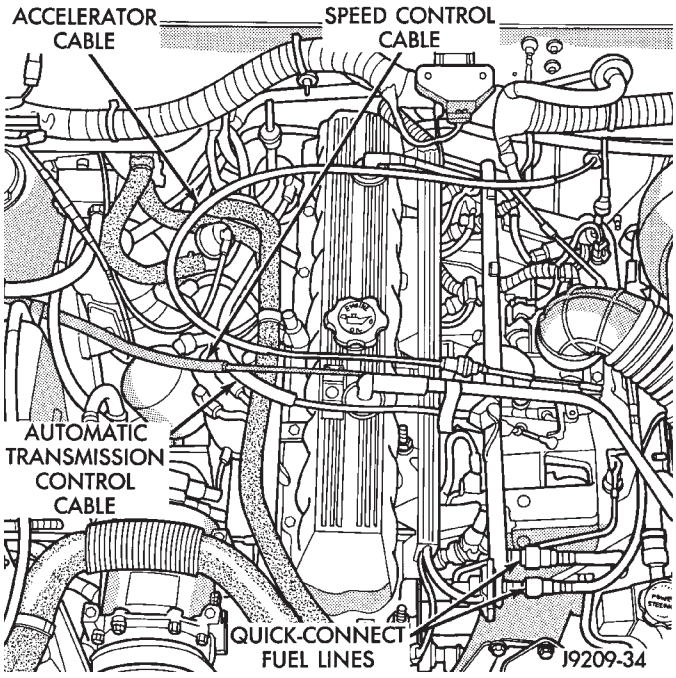

Fig. 15 Accelerator Cable, Speed Control Cable, Automatic Transmission Control Cable & Quick-Connect Fuel Lines

(21) Remove the fuel line bracket from the intake manifold.

(22) Remove the air cleaner assembly (Fig. 16).

(23) Remove the power brake vacuum check valve from the booster, if equipped.

(24) If equipped with power steering (Fig. 16):

(a) Disconnect the hoses from the fittings at the steering gear.

(b) Drain the pump reservoir.

(c) Cap the fittings on the hoses and steering gear to prevent foreign objects from entering the system.

(25) Identify, tag and disconnect all necessary wire connectors and vacuum hoses.

(26) Raise and support the vehicle.

(27) Disconnect the wires from the starter motor solenoid.

(28) Remove the starter motor.

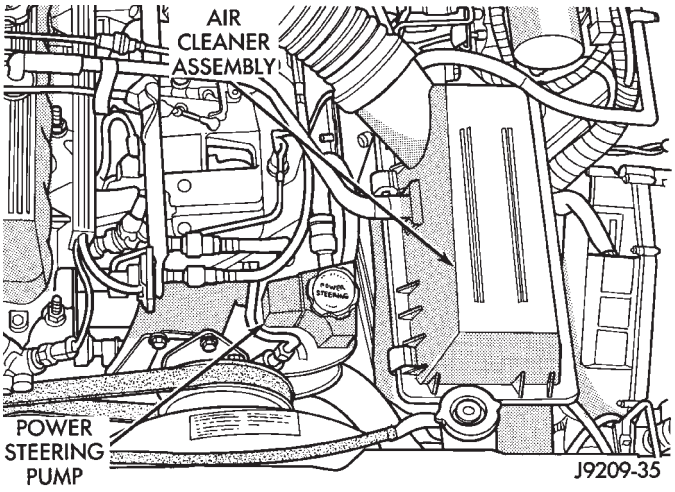

Fig. 16 Air Cleaner Assembly & Power Steering Pump

(29) Disconnect the exhaust pipe from the manifold.

(30) Disconnect the engine speed sensor wire connection.

(31) Remove the exhaust pipe support.

(32) Remove the flywheel and converter housing access cover.

(33) **Vehicles with Automatic Transmission:**

(a) Mark the converter and drive plate location.

(b) Remove the converter-to-drive plate bolts.

(34) Remove the upper flywheel and converter housing bolts and loosen the bottom bolts.

(35) Remove the engine mount cushion-to-engine compartment bracket bolts.

(36) Lower the vehicle.

(37) Attach a lifting device to the engine.

(38) Raise the engine off the front supports.

(39) Place a support or floor jack under the converter (or flywheel) housing.

(40) Remove the remaining converter (or flywheel) housing bolts.

(41) Lift the engine out of the engine compartment.

INSTALLATION

CAUTION: When installing the engine into a vehicle equipped with an automatic transmission, be careful not to damage the trigger wheel on the flywheel.

(1) Attach a lifting device to the engine and lower the engine into the engine compartment. For easier installation, it may be necessary to remove the engine mount cushions from the engine mount bracket as an aide in alignment of the engine to the transmission.

(2) **Vehicles with Manual Transmission:**

(a) Insert the transmission shaft into the clutch spline.

(b) Align the flywheel housing with the engine.

(c) Install and tighten the flywheel housing lower bolts finger tight.

(3) **Vehicles with Automatic Transmission:**

(a) Align the transmission torque converter housing with the engine.

(b) Loosely install the converter housing lower bolts and install the next higher bolt and nut on each side.

(c) Tighten all 4 bolts finger tight.

(4) Install the engine mount cushions (if removed).

(5) Lower the engine and engine mount cushions onto the engine compartment brackets. Install the bolts and finger tighten the nuts.

(6) Remove the engine lifting device.

(7) Raise and support the vehicle.

(8) Install the remaining flywheel and converter housing bolts. Tighten all bolts to 38 N·m (28 ft. lbs.) torque.

(9) **Vehicles with Automatic Transmission:**

(a) Install the converter-to-drive plate bolts.

(b) Ensure the installation reference marks are aligned.

(10) Install the flywheel and converter housing access cover.

(11) Install the exhaust pipe support and tighten the screw.

(12) Tighten the engine mount-to-bracket bolts.

(13) Connect the engine speed sensor wire connections and tighten the screws.

(14) Connect the exhaust pipe to the manifold.

(15) Install the starter motor and connect the cable.

(16) Connect the wires to the starter motor solenoid.

(17) Lower the vehicle.

(18) Connect all the vacuum hoses and wire connectors identified during engine removal.

(19) If equipped with power steering:

(a) Remove the protective caps

(b) Connect the hoses to the fittings at the steering gear. Tighten the nut to 52 N·m (38 ft. lbs.) torque.

(c) Fill the pump reservoir with fluid.

(20) Install the power brake vacuum check valve to the booster, if equipped.

(21) Connect the fuel inlet and return hoses at the fuel rail. Verify that the quick-connect fitting assembly fits securely over the fuel lines by giving the fuel lines a firm tug.

(22) Install the fuel line bracket to the intake manifold.

(23) Connect the distributor electrical connector and oil pressure switch connector.

(24) Connect the injection system wire harness connector on the dash panel.

(25) Connect the line pressure cable (if equipped with automatic transmission).

(26) Connect the speed control cable, if equipped.
(27) Connect the throttle cable linkages.
(28) Connect the heater hoses at the engine thermostat housing and water pump.
(29) Install the fan assembly to the idler pulley.
(30) Install the radiator or radiator and condenser (if equipped with A/C).
(31) Connect the service valves to the A/C compressor ports, if equipped with A/C.
(32) Charge the air conditioner system.
(33) Connect radiator fan switch wire.
(34) Connect automatic transmission fluid cooler lines, if equipped.
(35) Install the fan shroud, electric cooling fan and radiator and condenser (if equipped with A/C).
(36) Install upper radiator support.
(37) Connect the upper radiator hose.
(38) Connect the lower radiator hose.
(39) Fill the cooling system with reusable coolant and/or new coolant.
(40) Align the hood to the scribe marks. Install the hood.
(41) Connect the vacuum harness connector.
(a) Firmly push the connectors together ensuring that the retaining tabs are engaged.
(b) Insert the vacuum connector assembly into the retaining bracket on the intake manifold.
(42) Install the air cleaner assembly.
(43) Install the battery and connect the battery cable.

WARNING: USE EXTREME CAUTION WHEN THE ENGINE IS OPERATING. DO NOT STAND IN A DIRECT LINE WITH THE FAN. DO NOT PUT YOUR HANDS NEAR THE PULLEYS, BELTS OR FAN. DO NOT WEAR LOOSE CLOTHING.

(44) Start the engine, inspect for leaks and correct the fluid levels, as necessary.

ENGINE ASSEMBLY—YJ VEHICLES

REMOVAL

(1) Place a protective cloth over the windshield frame. Raise the hood and rest it on the windshield frame (Fig. 17).
(2) Disconnect the battery cables. Remove the battery.

WARNING: THE COOLANT IN A RECENTLY OPERATED ENGINE IS HOT AND PRESSURIZED. USE CARE TO PREVENT SCALDING BY HOT COOLANT. CAREFULLY RELEASE THE PRESSURE BEFORE REMOVING THE RADIATOR DRAIN COCK AND CAP.

(3) Remove the radiator drain cock and radiator cap to drain the coolant. DO NOT waste reusable coolant. If the solution is clean, drain the coolant into a clean container for reuse.

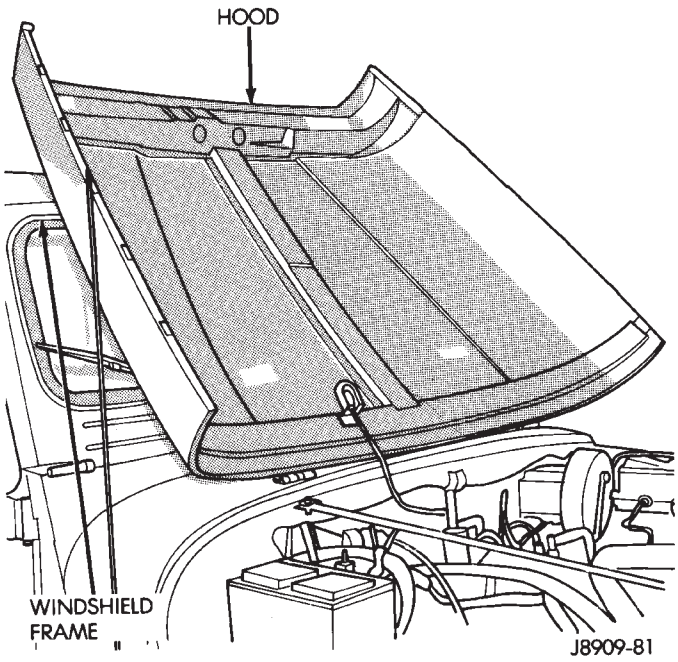

Fig. 17 Hood on Windshield Frame

(4) Disconnect the wire connectors from the generator.
(5) Disconnect the ignition coil and distributor wire connectors.
(6) Disconnect the oil pressure sender wire connector.
(7) Disconnect the wires at the starter motor solenoid and injection wire harness connector.
(8) Perform the Fuel System Pressure Release procedure (refer to Group 14, Fuel System).
(9) Disconnect the quick-connect fuel lines at the fuel rail and return line by squeezing the retaining tabs against the fuel tube (Fig. 18). Pull the fuel tube and retainer from the quick-connect fitting (refer to Group 14, Fuel System for the proper procedure).
(10) Remove the fuel line bracket from the intake manifold.
(11) Disconnect the engine ground strap.
(12) Remove the air cleaner (Fig. 18).
(13) Disconnect the vacuum purge hose at the fuel vapor canister tee.
(14) Disconnect the idle speed actuator wire connector.
(15) Disconnect the throttle cable and remove it from the bracket (Fig. 18).
(16) Disconnect the throttle rod at the bellcrank.
(17) Disconnect the speed control cable, if equipped (Fig. 18).

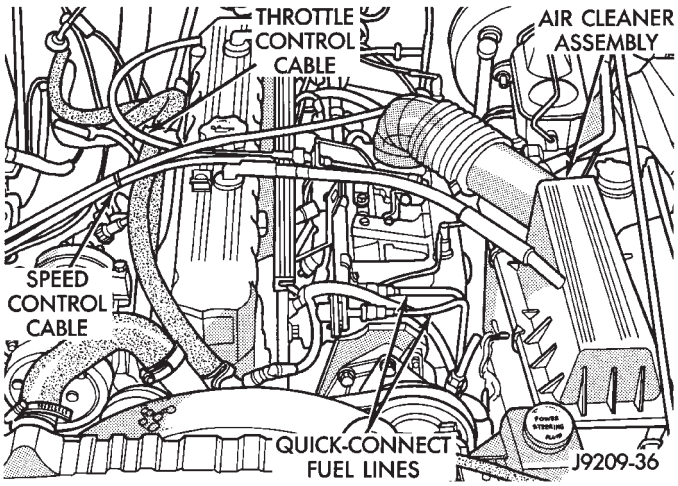

Fig. 18 Fuel Line Quick-Connect Couplings, Air Cleaner Assembly, Throttle & Speed Control Cables

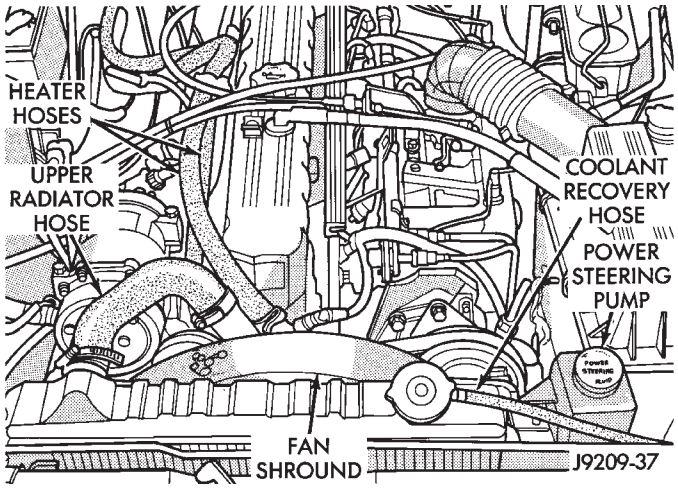

Fig. 19 Upper Radiator Hose, Coolant Recovery Hose, Fan Shroud & Power Steering Pump

(18) Disconnect the oxygen sensor wire connector.

(19) Remove the upper radiator hose and coolant recovery hose (Fig. 19).

(20) Disconnect lower radiator hoses at the radiator.

(21) Disconnect the coolant hoses from the rear of the intake manifold and thermostat housing.

(22) Remove the fan shroud screws.

(23) Remove the radiator attaching bolts.

(24) Remove the radiator and fan shroud (Fig. 19). Refer to Group 7, Cooling System for the proper procedure.

(25) Remove the fan and spacer or Tempatrol fan assembly.

(26) Install a 5/16 X 1/2-inch SAE capscrew through fan pulley into water pump flange. This will maintain the pulley and water pump in alignment when crankshaft is rotated.

(27) Remove the power brake vacuum check valve from the booster, if equipped.

(28) If equipped with power steering (Fig. 19):

(a) Disconnect the hoses from the fittings at the steering gear.

(b) Drain the pump reservoir.

(c) Cap the fittings on the hoses and steering gear to prevent foreign objects from entering the system.

(29) Lift the vehicle and support it with support stands.

(30) Remove the starter motor.

(31) Remove the flywheel housing access cover.

(32) Remove the engine support cushion-to-bracket through bolts.

(33) Disconnect the exhaust pipe from the manifold.

(34) Remove the upper flywheel housing bolts and loosen the bottom bolts.

(35) Lower the vehicle.

(36) Attach a lifting device to the engine.

(37) Raise the engine off the front supports.

(38) Place a support stand under the flywheel housing.

(39) Remove the remaining flywheel housing bolts.

(40) Lift the engine out of the engine compartment and install on an engine stand.

INSTALLATION

(1) Lift the engine off the stand and lower it into the engine compartment. For easier installation, it may be useful to remove the engine support cushions from the engine support brackets as an aide for alignment of the engine-to-transmission.

(2) Insert the transmission shaft into the clutch spline.

(3) Align the flywheel housing with the engine.

(4) Install and finger tighten the flywheel housing lower bolts.

(5) Install the engine support cushions (if removed).

(6) Remove the support stand from beneath the flywheel housing.

(7) Lower the engine and engine support cushions onto the engine compartment brackets. Ensure that the bolt holes are aligned. Install the bolts and tighten the nuts.

(8) Remove the engine lifting device.

(9) Raise the vehicle.

(10) Attach the exhaust pipe to the manifold. Install and tighten the nuts to 31 N·m (23 ft. lbs.) torque.

(11) Install the flywheel housing access cover.

(12) Install the remaining flywheel housing bolts. Tighten the bolts to 38 N·m (28 ft. lbs.) torque.

(13) Install the starter motor and connect the cable. Tighten the bolts to 45 N·m (33 ft. lbs.) torque.

(14) Lower the vehicle.

(15) Connect the coolant hoses and tighten the clamps.

(16) Remove the pulley-to-water pump flange alignment capscrew and install the fan and spacer or Tempatrol fan assembly.

(17) Tighten the serpentine drive belt according to the specifications listed in Group 7, Cooling System.

(18) Install the fan shroud and radiator (refer to Group 7, Cooling System for the proper procedure).

(19) Connect the radiator hoses.

(20) Connect the throttle valve rod and retainer.

(21) Connect the throttle cable and install the rod.

(22) Install the throttle valve rod spring.

(23) Connect the speed control cable, if equipped.

(24) Connect the oxygen sensor wire connector.

(25) Install the vacuum hose and check valve on the brake booster.

(26) Connect the coolant temperature sensor wire connector.

(27) Connect the idle speed actuator wire connector.

(28) Connect the fuel inlet and return hoses at the fuel rail. Verify that the quick-connect fitting assembly fits securely over the fuel lines by giving the fuel lines a firm tug.

(29) Install the fuel line bracket to the intake manifold.

(30) Connect all fuel injection wire connections.

(31) Install the engine ground strap.

(32) Connect the ignition coil wire connector.

(33) Remove the coolant temperature sending unit to permit air to escape from the block. Fill the cooling system with coolant. Install the coolant temperature sending unit when the system is filled.

(34) If equipped with power steering:

(a) Remove the protective caps

(b) Connect the hoses to the fittings at the steering gear. Tighten the nut to 52 N·m (38 ft. lbs.) torque.

(c) Fill the pump reservoir with fluid.

(35) Install the battery and connect the battery cables.

(36) Install the air cleaner bonnet to the throttle body.

(37) Install the air cleaner.

(38) Lower the hood and secure in place.

(39) Start the engine and inspect for leaks.

(40) Stop the engine and check the fluid levels. Add fluid, as required.

ENGINE CYLINDER HEAD COVER

A cured gasket is part of the engine cylinder head cover.

REMOVAL

(1) Disconnect negative cable from battery.

(2) Disconnect the Crankcase Ventilation (CCV) vacuum hose from engine cylinder head cover (Fig. 1).

(3) Disconnect the fresh air inlet hose from the engine cylinder head cover (Fig. 1).

(4) Remove the engine cylinder head cover mounting bolts.

(5) Remove the engine cylinder head cover.

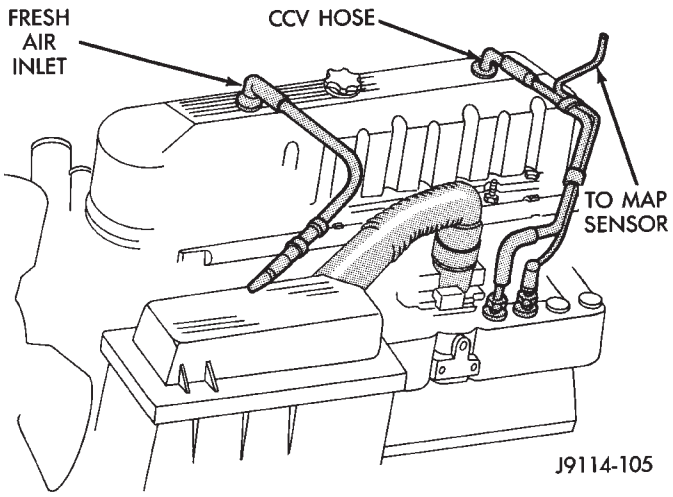

Fig. 1 Engine Cylinder Head Cover

CLEANING

Remove any original sealer from the cover sealing surface of the engine cylinder head and clean the surface using a fabric cleaner.

Remove all residue from the sealing surface using a clean, dry cloth.

INSPECTION

Inspect the engine cylinder head cover for cracks. Replace the cover, if cracked.

The original dark grey gasket material should NOT be removed. If sections of the gasket material are missing or are compressed, replace the engine cylinder head cover. However, sections with minor damage such as small cracks, cuts or chips may be repaired with a hand held applicator. The new material must be smoothed over to maintain gasket height. Allow the gasket material to cure prior to engine cylinder head cover installation.

INSTALLATION

(1) If a replacement cover is installed, transfer the CCV valve grommet and oil filler cap from the original cover to the replacement cover.

(2) Install engine cylinder head cover. Tighten the mounting bolts to 13 N·m (115 in. lbs.) torque.

(3) Connect the CCV hoses (Fig. 1).

(4) Connect negative cable to battery.

VALVE COMPONENT REPLACE—CYLINDER HEAD NOT REMOVED

ROCKER ARMS AND PUSH RODS

This procedure can be done with the engine in or out of the vehicle.

REMOVAL

(1) Remove the engine cylinder head cover.

(2) Remove the capscrews at each bridge and pivot assembly (Fig. 2). Alternately loosen the capscrews one turn at a time to avoid damaging the bridges.

(3) Check for rocker arm bridges which are causing misalignment of the rocker arm to valve tip area.

(4) Remove the bridges, pivots and corresponding pairs of rocker arms (Fig. 2). Place them on a bench in the same order as removed.

(5) Remove the push rods and place them on a bench in the same order as removed.

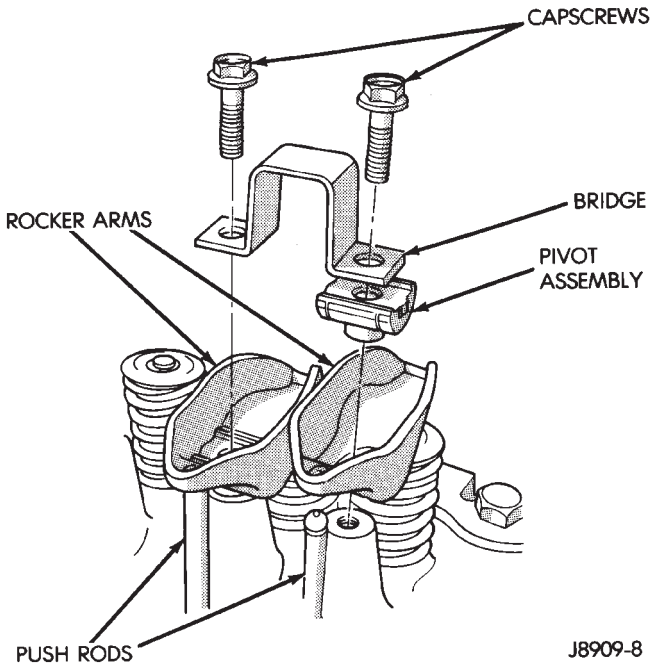

Fig. 2 Rocker Arm Assembly

CLEANING

Clean all the components with cleaning solvent.

Use compressed air to blow out the oil passages in the rocker arms and push rods.

INSPECTION

Inspect the pivot surface area of each rocker arm. Replace any that are scuffed, pitted, cracked or excessively worn.

Inspect the valve stem tip contact surface of each rocker arm and replace any rocker arm that is deeply pitted.

Inspect each push rod end for excessive wear and replace as required. If any push rod is excessively worn because of lack of oil, replace it and inspect the corresponding hydraulic tappet for excessive wear.

Inspect the push rods for straightness by rolling them on a flat surface or by shining a light between the push rod and the flat surface.

A wear pattern along the length of the push rod is not normal. Inspect the engine cylinder head for obstruction if this condition exists.

INSTALLATION

(1) Lubricate the ball ends of the push rods with Mopar Engine Oil Supplement, or equivalent and install push rods in their original locations. Ensure that the bottom end of each push rod is centered in the tappet plunger cap seat.

(2) Using Mopar Engine Oil Supplement, or equivalent, lubricate the area of the rocker arm that the pivot contacts. Install rocker arms, pivots and bridge above each cylinder in their originally position.

(3) Loosely install the capscrews through each bridge.

(4) At each bridge, tighten the capscrews alternately, one turn at a time, to avoid damaging the bridge. Tighten the capscrews to 28 N·m (21 ft. lbs.) torque.

(5) Install the engine cylinder head cover.

VALVE STEM SEAL AND SPRING REPLACEMENT

This procedure can be done with the engine cylinder head installed on the block.

REMOVAL

Each valve spring is held in place by a retainer and a set of conical valve locks. The locks can be removed only by compressing the valve spring.

(1) Remove the engine cylinder head cover.

(2) Remove capscrews, bridge and pivot assemblies and rocker arms for access to each valve spring to be removed.

(3) Remove push rods. Retain the push rods, bridges, pivots and rocker arms in the same order and position as removed.

(4) Inspect the springs and retainer for cracks and possible signs of weakening.

(5) Remove the spark plug(s) adjacent to the cylinder(s) below the valve springs to be removed.

(6) Connect an air hose to the adapter and apply air pressure slowly. Maintain at least 621 kPa (90 psi) of air pressure in the cylinder to hold the valves against their seats. For vehicles equipped with an air conditioner, use a flexible air adaptor when servicing the No.1 cylinder.

(7) Tap the retainer or tip with a rawhide hammer to loosen the lock from the retainer. Use Valve Spring Compressor Tool MD-998772A to compress the spring and remove the locks (Fig. 3).

(8) Remove valve spring and retainer (Fig. 3).

(9) Remove valve stem oil seals (Fig. 3). Note the valve seals are different for intake and exhaust valves. The top of each seal is marked either INT (Intake) or EXH (Exhaust). DO NOT mix the seals.

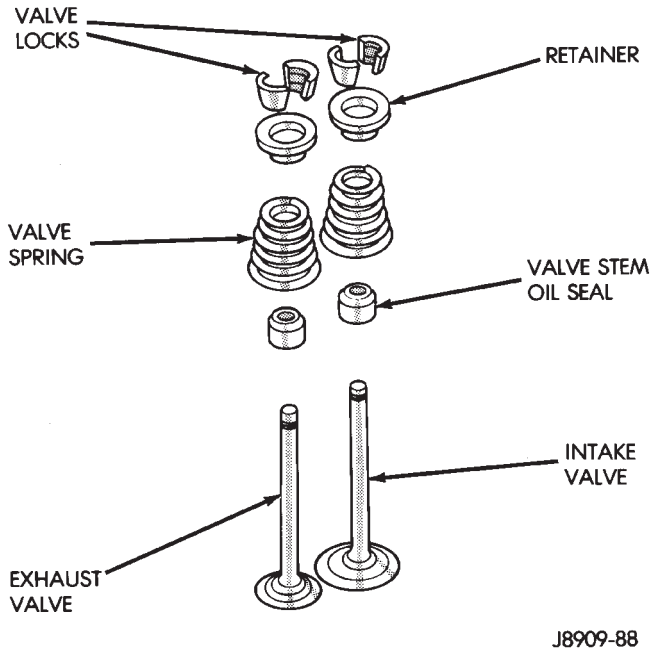

Fig. 3 Valve and Valve Components

INSPECTION

Inspect the valve stems, especially the grooves. An Arkansas smooth stone should be used to remove nicks and high spots.

INSTALLATION

CAUTION: Install oil seals carefully to prevent damage from the sharp edges of the valve spring lock grove.

(1) Lightly push the valve seal over the valve stem and valve guide boss. Be sure the seal is completely seated on the valve guide boss.

(2) Install valve spring and retainer.

(3) Compress the valve spring with Valve Spring Compressor Tool MD-998772A and insert the valve locks. Release the spring tension and remove the tool. Tap the spring from side-to-side to ensure that the spring is seated properly on the engine cylinder head.

(4) Disconnect the air hose. Remove the adaptor from the spark plug hole and install the spark plug.

(5) Repeat the procedures for each remaining valve spring to be removed.

(6) Install the push rods. Ensure the bottom end of each rod is centered in the plunger cap seat of the hydraulic valve tappet.

(7) Install the rocker arms, pivots and bridge at their original location.

(8) Tighten the bridge capscrews alternately, one at a time, to avoid damaging the bridge. Tighten the capscrews to 28 N·m (21 ft. lbs.) torque.

(9) Install the engine cylinder head cover.

HYDRAULIC TAPPETS

Retain all the components in the same order as removed.

REMOVAL

(1) Remove the engine cylinder head cover.

(2) Remove the bridge and pivot assemblies and rocker arms by removing the capscrews at each bridge. Alternately loosen each capscrew, one turn at a time, to avoid damaging the bridges.

(3) Remove the push rods.

(4) Remove the tappets through the push rod openings in the cylinder block with Hydraulic Valve Tappet Removal/Installation Tool C-4129-A (Fig. 4).

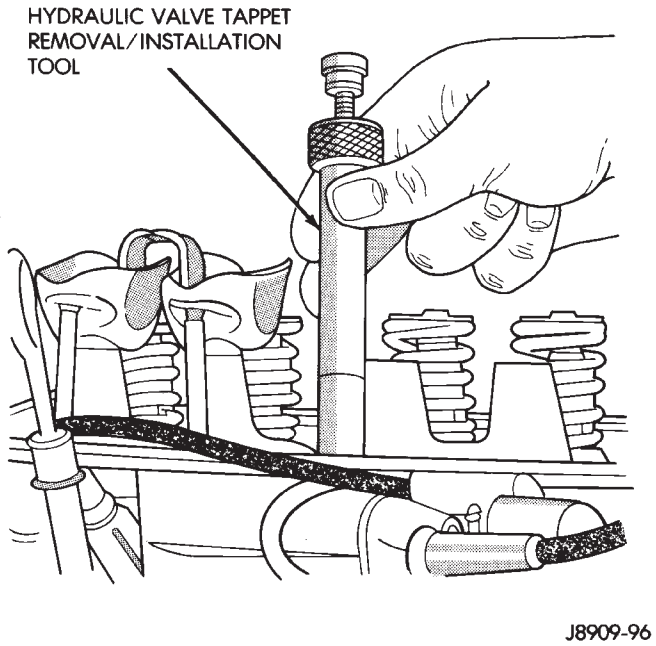

Fig. 4 Hydraulic Valve Tappet Removal—Installation Tool C-4129-A

CLEANING

Clean each tappet assembly in cleaning solvent to remove all varnish, gum and sludge deposits.

INSPECTION

Inspect for indications of scuffing on the side and base of each tappet body.

Inspect each tappet base for concave wear with a straightedge positioned across the base. If the base is concave, the corresponding lobe on the camshaft is also worn. Replace the camshaft and defective tappets.

LEAK-DOWN TEST

After cleaning and inspection, test each tappet for specified leak-down rate tolerance to ensure zero-lash operation (Fig. 5).

Swing the weighted arm of the hydraulic valve tappet tester away from the ram of the Leak-Down Tester.

(1) Place a 7.925-7.950 mm (0.312-0.313 inch) diameter ball bearing on the plunger cap of the tappet.

(2) Lift the ram and position the tappet (with the ball bearing) inside the tester cup.

(3) Lower the ram, then adjust the nose of the ram until it contacts the ball bearing. DO NOT tighten the hex nut on the ram.

(4) Fill the tester cup with hydraulic valve tappet test oil until the tappet is completely submerged.

(5) Swing the weighted arm onto the push rod and pump the tappet plunger up and down to remove air. When the air bubbles cease, swing the weighted arm away and allow the plunger to rise to the normal position.

(6) Adjust the nose of the ram to align the pointer with the SET mark on the scale of the tester and tighten the hex nut.

(7) Slowly swing the weighted arm onto the push rod.

(8) Rotate the cup by turning the handle at the base of the tester clockwise one revolution every 2 seconds.

(9) Observe the leak-down time interval from the instant the pointer aligns with the START mark on the scale until the pointer aligns with the 0.125 mark. A normally functioning tappet will require 20-110 seconds to leak-down. Discard tappets with leak-down time interval not within this specification.

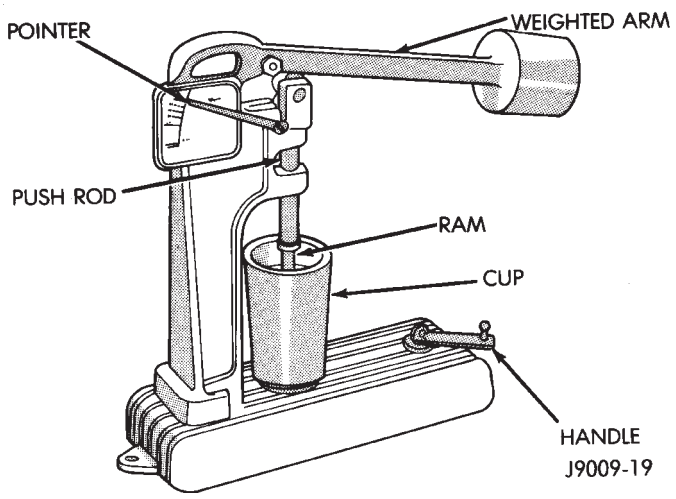

Fig. 5 Leak-Down Tester

INSTALLATION

It is not necessary to charge the tappets with engine oil. They will charge themselves within a very short period of engine operation.

(1) Dip each tappet in Mopar Engine Oil Supplement, or equivalent.

(2) Use Hydraulic Valve Tappet Removal/Installation Tool C-4129-A to install each tappet in the same bore from where it was originally removed.

(3) Install the push rods in their original locations.

(4) Install the rocker arms and bridge and pivot assemblies at their original locations. Loosely install the capscrews at each bridge.

(5) Tighten the capscrews alternately, one turn at a time, to avoid damaging the bridges. Tighten the capscrews to 28 N·m (21 ft. lbs.) torque.

(6) Pour the remaining Mopar Engine Oil Supplement, or equivalent over the entire valve actuating assembly. The Mopar Engine Oil Supplement, or equivalent must remain with the engine oil for at least 1 609 km (1,000 miles). The oil supplement need not be drained until the next scheduled oil change.

(7) Install the engine cylinder head cover.

ENGINE CYLINDER HEAD

This procedure can be done with the engine in or out of the vehicle.

REMOVAL

(1) Disconnect negative cable from battery.

WARNING: DO NOT REMOVE THE CYLINDER BLOCK DRAIN PLUGS OR LOOSEN THE RADIATOR DRAIN COCK WITH THE SYSTEM HOT AND PRESSURIZED BECAUSE SERIOUS BURNS FROM THE COOLANT CAN OCCUR.

(2) Drain the coolant and disconnect the hoses at the engine thermostat housing. DO NOT waste reusable coolant. If the solution is clean and is being drained only to service the engine or cooling system, drain the coolant into a clean container for reuse.

(3) Remove the air cleaner assembly.

(4) Remove the engine cylinder head cover.

(5) Remove the capscrews, bridge and pivot assemblies and rocker arms (Fig. 2).

(6) Remove the push rods (Fig. 2). **Retain the push rods, bridges, pivots and rocker arms in the same order as removed.**

(7) Loosen the serpentine drive belt at the power steering pump, if equipped or at the idler pulley (refer to Group 7, Cooling System for the proper procedure).

(8) If equipped with air conditioning, perform the following:

(a) Remove the bolts from the A/C compressor mounting bracket and set the compressor aside.

(b) Remove the air conditioner compressor bracket bolts from the engine cylinder head.

(c) Loosen the through bolt at the bottom of the bracket.

(9) If equipped, disconnect the power steering pump bracket. Set the pump and bracket aside. DO NOT disconnect the hoses.

(10) Perform the Fuel System Pressure Release procedure (refer to Group 14, Fuel System).

(11) Remove the fuel lines and vacuum advance hose.

(12) Remove the intake and engine exhaust manifolds from the engine cylinder head (refer to Group 11, Exhaust System and Intake Manifold for the proper procedures).

(13) Disconnect the ignition wires and remove the spark plugs.

(14) Disconnect the temperature sending unit wire connector.

(15) Remove the ignition coil and bracket assembly.

(16) Remove the engine cylinder head bolts. Bolt No.14 cannot be removed until the head is moved forward (Fig. 6). Pull bolt No.14 out as far as it will go and then suspend the bolt in this position (tape around the bolt).

(17) Remove the engine cylinder head and gasket (Fig. 6).

(18) If this was the first time the bolts were removed, put a paint dab on the top of the bolt. If the bolts have a paint dab on the top of the bolt or it isn't known if they were used before, discard the bolts.

(19) Stuff clean lint free shop towels into the cylinder bores.

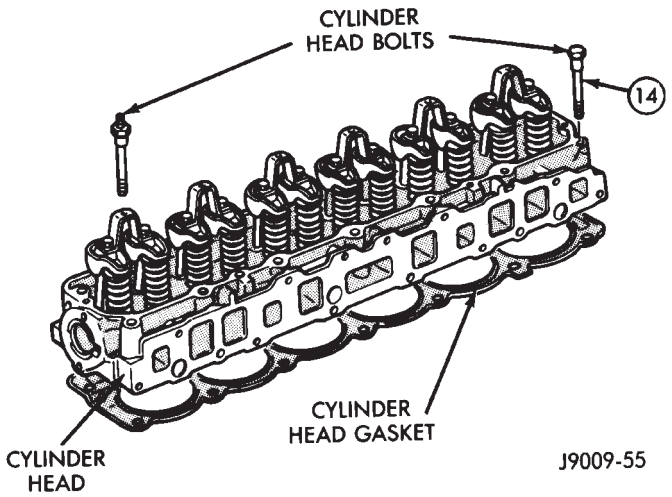

Fig. 6 Engine Cylinder Head Assembly

CLEANING

Thoroughly clean the engine cylinder head and cylinder block mating surfaces. Clean the intake and engine exhaust manifold and engine cylinder head mating surfaces. Remove all gasket material and carbon.

Check to ensure that no coolant or foreign material has fallen into the tappet bore area.

Remove the carbon deposits from the combustion chambers and top of the pistons.

INSPECTION

Use a straightedge and feeler gauge to check the flatness of the engine cylinder head and block mating surfaces.

INSTALLATION

The engine cylinder head gasket is a composition gasket. The gasket is to be installed DRY. **DO NOT use a gasket sealing compound on the gasket.**

If the engine cylinder head is to be replaced and the original valves used, measure the valve stem diameter. Only standard size valves can be used with a service replacement engine cylinder head unless the replacement head valve stem guide bores are reamed to accommodate oversize valve stems. Remove all carbon buildup and reface the valves.

(1) Remove the shop towels from the cylinder bores. Coat the bores with clean engine oil.

(2) Position the engine cylinder head gasket (with the numbers facing up) onto the cylinder block.

CAUTION: Engine cylinder head bolts should be reused only once. Replace the head bolts if they were used before or if they have a paint dab on the top of the bolt.

(3) With bolt No.14 held in place (tape around bolt), install the engine cylinder head. Remove the tape from bolt No.14.

(4) Coat the threads of stud bolt No.11 with Loctite 592 sealant, or equivalent.

(5) Tighten the engine cylinder head bolts in sequence according to the following procedure (Fig. 7):

(a) Tighten all bolts in sequence (1 through 14) to 30 N·m (22 ft. lbs.) torque.

(b) Tighten all bolts in sequence (1 through 14) to 61 N·m (45 ft. lbs.) torque.

(c) Check all bolts to verify they are set to 61 N·m (45 ft. lbs.) torque.

(d) Tighten bolts (in sequence):

- Bolts 1 through 10 to 149 N·m (110 ft. lbs.) torque.
- Bolt 11 to 13 N·m (100 ft. lbs.) torque.
- Bolts 12 through 14 to 149 N·m (110 ft. lbs.) torque.

CAUTION: During the final tightening sequence, bolt No.11 will be tightened to a lower torque than the rest of the bolts. DO NOT overtighten bolt No.11.

(e) Check all bolts in sequence to verify the correct torque.

(f) If not already done, clean and mark each bolt with a dab of paint after tightening. Should you en-

counter bolts which were painted in an earlier service operation, replace them.

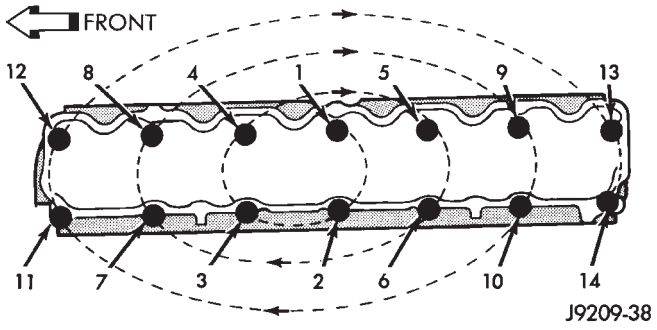

Fig. 7 Engine Cylinder Head Bolt Tightening Sequence

(6) Install the ignition coil and bracket assembly.

(7) Connect the temperature sending unit wire connector.

(8) Install the spark plugs and tighten to 37 N·m (27 ft. lbs.) torque. Connect the ignition wires.

(9) Install the intake and engine exhaust manifolds (refer to Group 11, Exhaust System and Intake Manifold for the proper procedures).

(10) Install the fuel lines and the vacuum advance hose.

(11) If equipped, attach the power steering pump and bracket.

(12) Install the push rods, rocker arms, pivots and bridges in the order they were removed (refer to Rocker Arms and Push Rods in this section).

(13) Install the engine cylinder head cover.

(14) Attach the air conditioner compressor mounting bracket to the engine cylinder head and block. Tighten the bolts to 40 N·m (30 ft. lbs.) torque.

(15) Attach the air conditioning compressor to the bracket. Tighten the bolts to 27 N·m (20 ft. lbs.) torque.

CAUTION: The serpentine drive belt must be routed correctly. Incorrect routing can cause the water pump to turn in the opposite direction causing the engine to overheat.

(16) Install the serpentine drive belt and correctly tension the belt (refer to Group 7, Cooling System for the proper procedure).

(17) Install the air cleaner and ducting.

(18) Install the engine cylinder head cover.

(19) Connect the hoses to the engine thermostat housing and fill the cooling system to the specified level (refer to Group 7, Cooling Systems for the proper procedure).

(20) The automatic transmission throttle linkage and cable must be adjusted after completing the engine cylinder head installation (refer to Group 21, Transmissions for the proper procedures).

(21) Install the temperature sending unit and connect the wire connector.

(22) Connect the fuel line.

(23) Connect negative cable to battery.

(24) Connect the upper radiator hose and heater hose at the engine thermostat housing.

(25) Fill the cooling system. Check for leaks.

WARNING: USE EXTREME CAUTION WHEN THE ENGINE IS OPERATING. DO NOT STAND IN DIRECT LINE WITH THE FAN. DO NOT PUT HANDS NEAR THE PULLEYS, BELTS OR FAN. DO NOT WEAR LOOSE CLOTHING.

(26) Operate the engine with the radiator cap off. Inspect for leaks and continue operating the engine until the engine thermostat opens. Add coolant, if required.

VALVES AND VALVE SPRINGS

This procedure is done with the engine cylinder head removed from the block.

REMOVAL

(1) Remove the engine cylinder head from the cylinder block.

(2) Use Valve Spring Compressor Tool MD-998772A and compress each valve spring.

(3) Remove the valve locks, retainers, springs and valve stem oil seals. Discard the oil seals.

(4) Use an Arkansas smooth stone or a jewelers file to remove any burrs on the top of the valve stem, especially around the groove for the locks.

(5) Remove the valves, and place them in a rack in the same order as removed.

VALVE CLEANING

Clean all carbon deposits from the combustion chambers, valve ports, valve stems, valve stem guides and head.

Clean all grime and gasket material from the engine cylinder head machined gasket surface.

INSPECTION

Inspect for cracks in the combustion chambers and valve ports.

Inspect for cracks on the exhaust seat.

Inspect for cracks in the gasket surface at each coolant passage.

Inspect valves for burned, cracked or warped heads.

Inspect for scuffed or bent valve stems.

Replace valves displaying any damage.

VALVE REFACING

(1) Use a valve refacing machine to reface the intake and exhaust valves to the specified angle.

(2) After refacing, a margin of at least 0.787 mm (0.031 inch) must remain (Fig. 8). If the margin is less than 0.787 mm (0.031 inch), the valve must be replaced.

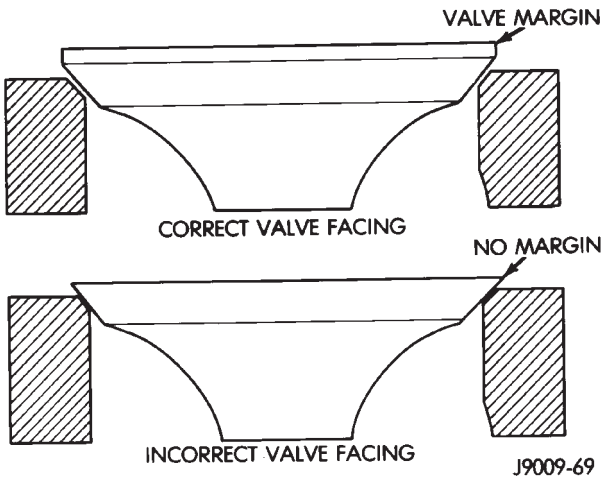

Fig. 8 Valve Facing Margin

VALVE SEAT REFACING

(1) Install a pilot of the correct size in the valve guide bore. Reface the valve seat to the specified angle with a good dressing stone. Remove only enough metal to provide a smooth finish.

(2) Use tapered stones to obtain the specified seat width when required.

(3) Control valve seat runout to a maximum of 0.0635 mm (0.0025 in.) (Fig. 9).

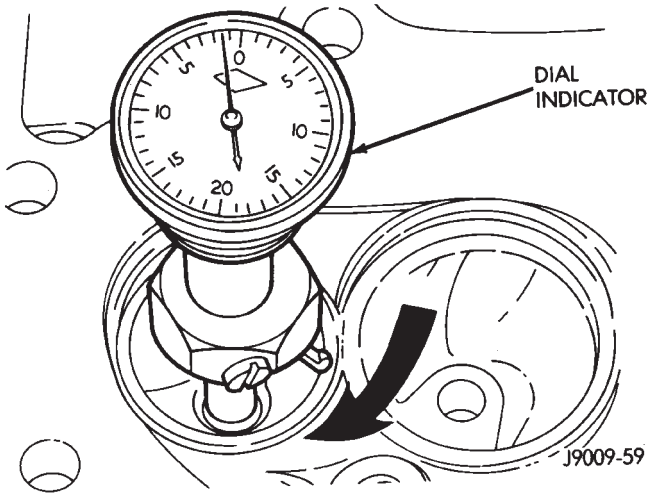

Fig. 9 Measurement of Valve Seat Runout

VALVE STEM OIL SEAL REPLACEMENT

Valve stem oil seals are installed on each valve stem to prevent rocker arm lubricating oil from entering the combustion chamber through the valve guide bores. One seal is marked INT (intake valve) and the other is marked EXH (exhaust valve).

Replace the oil seals whenever valve service is performed or if the seals have deteriorated.

VALVE GUIDES

The valve guides are an integral part of the engine cylinder head and are not replaceable.

When the valve stem guide clearance is excessive, the valve guide bores must be reamed oversize. Service valves with oversize stems are available in 0.076 mm (0.003 inch) and 0.381 mm (0.015 inch) increments.

Corresponding oversize valve stem seals are also available and must be used with valves having 0.381 mm (0.015 inch) oversize stems.

If the valve guides are reamed oversize, the valve seats must be ground to ensure that the valve seat is concentric to the valve guide.

VALVE STEM-TO-GUIDE CLEARANCE MEASUREMENT

Valve stem-to-guide clearance may be measured by either of the following two methods.

PREFERRED METHOD:

(1) Remove the valve from the head.

(2) Clean the valve stem guide bore with solvent and a bristle brush.

(3) Insert a telescoping gauge into the valve stem guide bore approximately 9.525 mm (.375 inch) from the valve spring side of the head (Fig. 10).

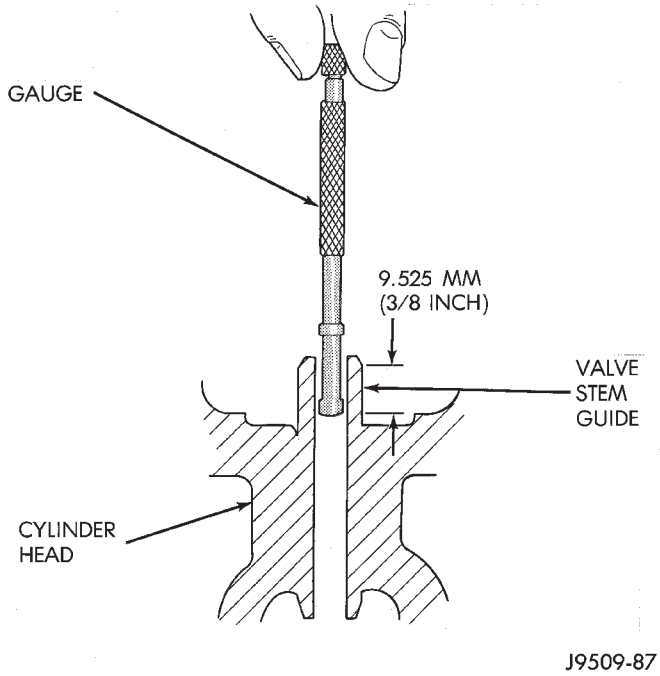

Fig. 10 Measurement of Valve Guide Bore Diameter

(4) Remove and measure telescoping gauge with a micrometer.

(5) Repeat the measurement with contacts lengthwise to engine cylinder head.

(6) Compare the crosswise to lengthwise measurements to determine out-of-roundness. If the measure-

ments differ by more than 0.0635 mm (0.0025 in.), ream the guide bore to accommodate an oversize valve stem.

(7) Compare the measured valve guide bore diameter with specifications (7.95-7.97 mm or 0.313-0.314 inch). If the measurement differs from specification by more than 0.076 mm (0.003 inch), ream the guide bore to accommodate an oversize valve stem.

ALTERNATIVE METHOD:

(1) Use a dial indicator to measure the lateral movement of the valve stem (stem-to-guide clearance). This must be done with the valve installed in its guide and just off the valve seat (Fig. 11).

(2) Correct clearance is 0.025-0.0762 mm (0.001-0.003 inch). If indicated movement exceeds the specification ream the valve guide to accommodate an oversize valve stem.

Valve seats must be ground after reaming the valve guides to ensure that the valve seat is concentric to the valve guide.

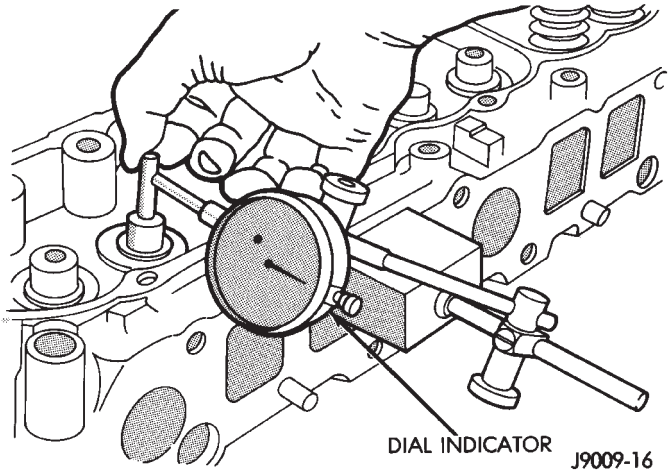

Fig. 11 Measurement of Lateral Movement of Valve Stem

VALVE SPRING TENSION TEST

Use a universal Valve Spring Tester and a torque wrench to test each valve spring for the specified tension value (Fig. 12).

Replace valve springs that are not within specifications.

INSTALLATION

(1) Thoroughly clean the valve stems and the valve guide bores.

(2) Lightly lubricate the stem.

(3) Install the valve in the original valve guide bore.

(4) Install the replacement valve stem oil seals on the valve stems. If the 0.381 mm (0.015 inch) oversize valve stems are used, oversize oil seals are required.

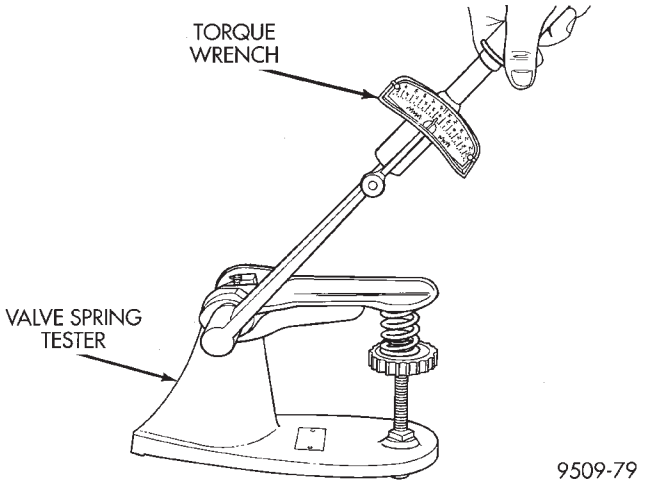

Fig. 12 Valve Spring Tester

(5) Position the valve spring and retainer on the engine cylinder head and compress the valve spring with Valve Spring Compressor Tool MD-998772A.

(6) Install the valve locks and release the tool.

(7) Tap the valve spring from side to side with a hammer to ensure that the spring is properly seated at the engine cylinder head. Also tap the top of the retainer to seat the valve locks.

(8) Install the engine cylinder head.

VALVE TIMING

Disconnect the spark plug wires and remove the spark plugs.

Remove the engine cylinder head cover.

Remove the capscrews, bridge and pivot assembly, and rocker arms from above the No.1 cylinder.

Alternately loosen each capscrew, one turn at a time, to avoid damaging the bridge.

Rotate the crankshaft until the No.6 piston is at top dead center (TDC) on the compression stroke.

Rotate the crankshaft counterclockwise (viewed from the front of the engine) 90°.

Install a dial indicator on the end of the No.1 cylinder intake valve push rod. Use rubber tubing to secure the indicator stem on the push rod.

Set the dial indicator pointer at zero.

Rotate the crankshaft clockwise (viewed from the front of the engine) until the dial indicator pointer indicates 0.305 mm (0.012 inch) travel distance (lift).

The timing notch index on the vibration damper should be aligned with the TDC mark on the timing degree scale.

If the timing notch is more than 13 mm (1/2 inch) away from the TDC mark in either direction, the valve timing is incorrect.

If the valve timing is incorrect, the cause may be a broken camshaft pin. It is not necessary to replace the camshaft because of pin failure. A spring pin is available for service replacement.

VIBRATION DAMPER

REMOVAL

(1) Disconnect negative cable from battery.
(2) Remove the serpentine drive belt and fan shroud.
(3) Remove the vibration damper retaining bolt and washer.
(4) Use Vibration Damper Removal Tool 7697 to remove the damper from the crankshaft (Fig. 1).

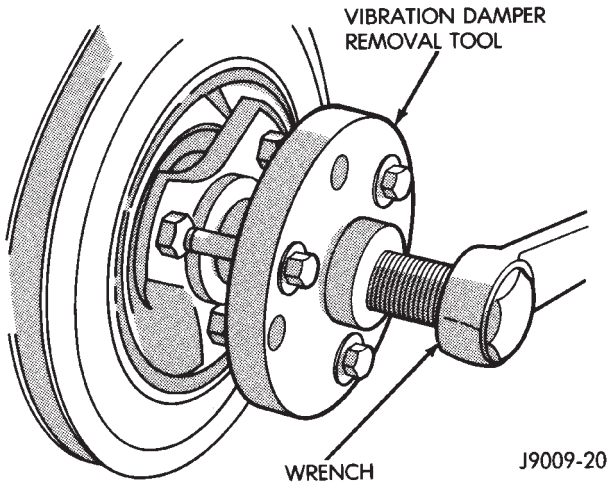

Fig. 1 Vibration Damper Removal Tool 7697

INSTALLATION

(1) Apply Mopar Silicone Rubber Adhesive Sealant to the keyway in the crankshaft and insert the key. With the key in position, align the keyway on the vibration damper hub with the crankshaft key and tap the damper onto the crankshaft.
(2) Install the vibration damper retaining bolt and washer.
(3) Tighten the damper retaining bolt to 108 N·m (80 ft. lbs.) torque.
(4) Install the serpentine drive belt and tighten to the specified tension (refer to Group 7, Cooling Systems for the proper specifications and procedures).
(5) Connect negative cable to battery.

TIMING CASE COVER

REMOVAL

(1) Disconnect negative cable from battery.
(2) Remove the vibration damper (Fig. 1).
(3) Remove the fan and hub assembly and remove the fan shroud.
(4) Remove the accessory drive brackets that are attached to the timing case cover.
(5) Remove the A/C compressor (if equipped) and generator bracket assembly from the engine cylinder head and move to one side.
(6) Remove the oil pan-to-timing case cover bolts and timing case cover-to-cylinder block bolts.
(7) Remove the timing case cover and gasket from the engine. Make sure the tension spring and thrust pin do not fall out of the preload bolt.
(8) Pry the crankshaft oil seal from the front of the timing case cover (Fig. 2).

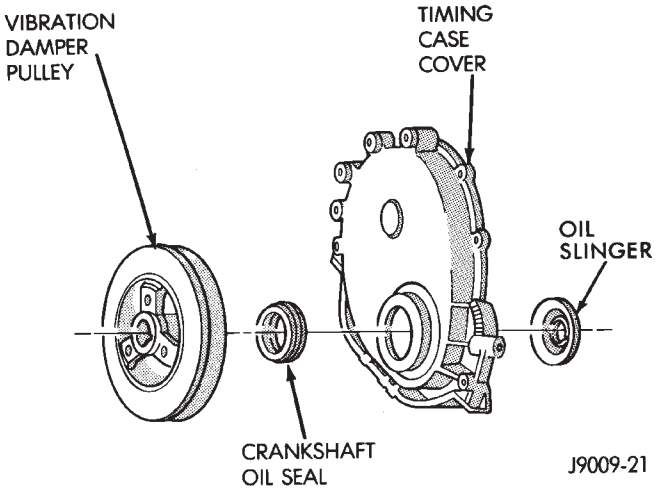

Fig. 2 Timing Case Cover Components

CLEANING

Clean the timing case cover, oil pan and cylinder block gasket surfaces.

INSTALLATION

(1) Install a new crankshaft oil seal in the timing case cover. The open end of the seal should be toward the inside of the cover. Support the cover at the seal area while installing the seal. Force it into position with Seal Installation Tool 6139.
(2) Position the gasket on the cylinder block.
(3) Position the timing case cover on the oil pan gasket and the cylinder block. Make sure the tension spring and thrust pin are in place in the camshaft preload bolt.
(4) Insert Timing Case Cover Alignment and Seal Installation Tool 6139 in the crankshaft opening in the cover (Fig. 3).
(5) Install the timing case cover-to-cylinder block and the oil pan-to-timing case cover bolts.
(6) Tighten the 1/4 inch cover-to-block bolts to 7 N·m (60 in. lbs.) torque. Tighten the 5/16 inch front cover-to-block bolts to 22 N·m (192 in. lbs.) torque. Tighten the oil pan-to-cover 1/4 inch bolts to 14 N·m (120 in. lbs.) torque. Tighten the oil pan-to-cover 5/16 inch bolts to 18 N·m (156 in. lbs.) torque.
(7) Remove the cover alignment tool.
(8) Apply a light film of engine oil on the vibration damper hub contact surface of the seal.
(9) Apply Mopar Silicone Rubber Adhesive Sealant to the keyway in the crankshaft and insert the key. With the key inserted in the keyway in the crankshaft, install the vibration damper, washer and bolt. Lubricate and tighten the bolt to 108 N·m (80 ft. lbs.) torque.

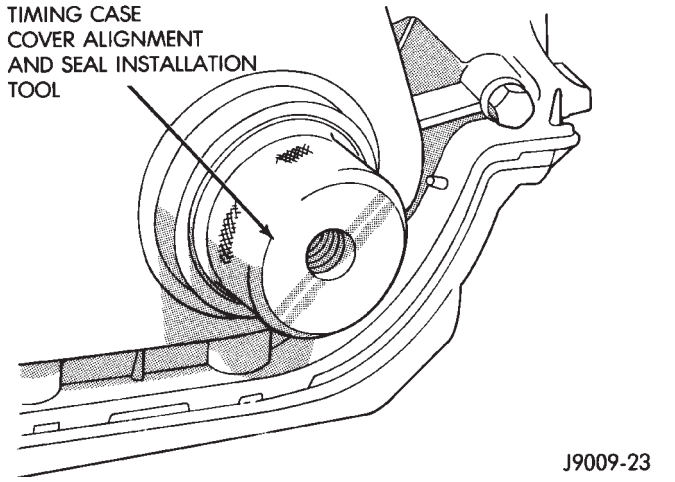

Fig. 3 Timing Case Cover Alignment and Seal Installation Tool 6139

(10) Install the A/C compressor (if equipped) and generator bracket assembly.

(11) Install the engine fan and hub assembly and shroud.

(12) Install the serpentine drive belt and tighten to obtain the specified tension.

(13) Connect negative cable to battery.

TIMING CASE COVER OIL SEAL REPLACEMENT

This procedure is done with the timing case cover installed.

(1) Disconnect negative cable from battery.

(2) Remove the serpentine drive belt.

(3) Remove the vibration damper.

(4) Remove the radiator shroud.

(5) Carefully remove the oil seal. Make sure seal bore is clean.

(6) Position the replacement oil seal on Timing Case Cover Alignment and Seal Installation Tool 6139 with seal open end facing inward. Apply a light film of Perfect Seal, or equivalent, on the outside diameter of the seal. Lightly coat the crankshaft with engine oil.

(7) Position the tool and seal over the end of the crankshaft and insert a draw screw tool into Seal Installation Tool 6139 (Fig. 4). Tighten the nut against the tool until it contacts the cover.

(8) Remove the tools. Apply a light film of engine oil on the vibration damper hub contact surface of the seal.

(9) Apply Mopar Silicone Rubber Adhesive Sealant to the keyway in the crankshaft and insert the key. With the key inserted in the keyway in the crankshaft, install the vibration damper, washer and bolt. Lubricate and tighten the bolt to 108 N·m (80 ft. lbs.) torque.

(10) Install the serpentine belt and tighten to the specified tension (refer to Group 7, Cooling Systems for the proper specifications and procedures).

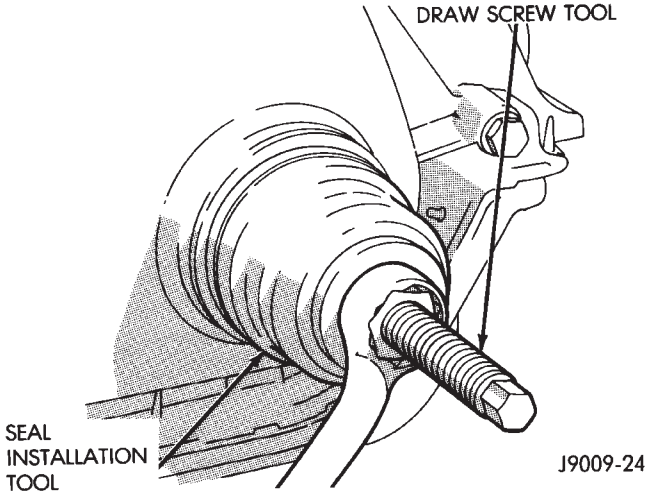

Fig. 4 Timing Case Cover Oil Seal Installation

(11) Install the radiator shroud.

(12) Connect negative cable to battery.

TIMING CHAIN AND SPROCKETS

REMOVAL

(1) Disconnect negative cable from battery.

(2) Remove the fan and shroud.

(3) Remove the serpentine drive belt.

(4) Remove the crankshaft vibration damper.

(5) Remove the timing case cover.

(6) Rotate crankshaft until the "0" timing mark is closest to and on the center line with camshaft sprocket timing mark (Fig. 5).

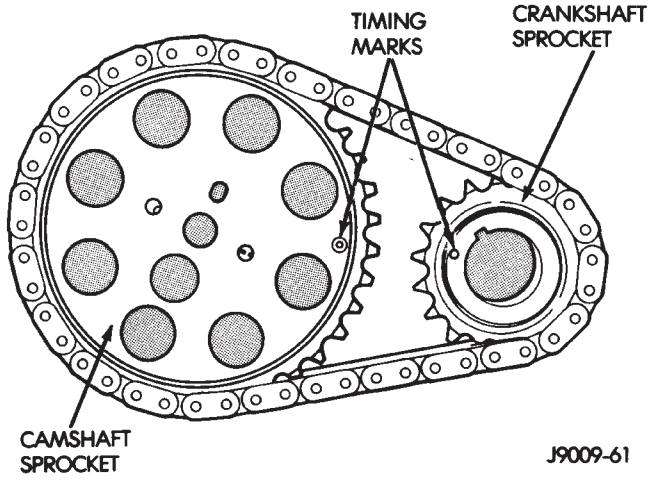

Fig. 5 Crankshaft—Camshaft Alignment—Typical

(7) Remove the oil slinger from the crankshaft.

(8) Remove the tension spring and thrust pin from the preload bolt (Fig. 6). Remove the camshaft sprocket retaining preload bolt and washer.

(9) Remove the crankshaft sprocket, camshaft sprocket and timing chain as an assembly.

Installation of the timing chain with the timing marks on the crankshaft and camshaft sprockets

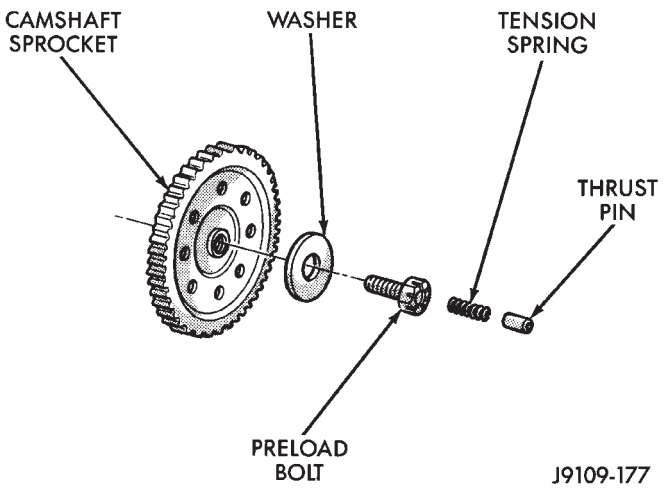

Fig. 6 Camshaft Sprocket Preload Bolt

properly aligned ensures correct valve timing. A worn or stretched timing chain will adversely affect valve timing. If the timing chain deflects more than 12.7 mm (1/2 inch) replace it. The correct timing chain has 48 pins. A chain with more than 48 pins will cause excessive slack.

INSTALLATION

Assemble the timing chain, crankshaft sprocket and camshaft sprocket with the timing marks aligned (Fig. 5).

(1) Apply Mopar Silicone Rubber Adhesive Sealant to the keyway in the crankshaft and insert the key. With the key in the keyway on the crankshaft, install the assembly on the crankshaft and camshaft.

(2) Install the camshaft sprocket retaining preload bolt and washer (Fig. 7). Tighten the preload bolt to 108 N·m (80 ft. lbs.) torque.

(3) To verify correct installation of the timing chain, turn the crankshaft to position the camshaft sprocket timing mark as shown in Fig. 8. Count the number of chain pins between the timing marks of both sprockets. There must be 15 pins.

(4) Install the crankshaft oil slinger.

(5) Replace the oil seal in the timing case cover.

(6) Lubricate the tension spring, thrust pin and pin bore in the preload bolt with Mopar Engine Oil Supplement, or equivalent. Install the spring and thrust pin in the preload bolt head (Fig. 6).

(7) Install the timing case cover and gasket.

(8) With the key installed in the crankshaft keyway, install the vibration damper, washer and bolt. Lubricate and tighten the bolt to 108 N·m (80 ft. lbs.) torque.

(9) Install the serpentine drive belt and tighten to the specified tension (refer to Group 7, Cooling System for the proper procedure).

(10) Install the fan and hub (or Tempatrol fan) assembly. Install the shroud.

(11) Connect negative cable to battery.

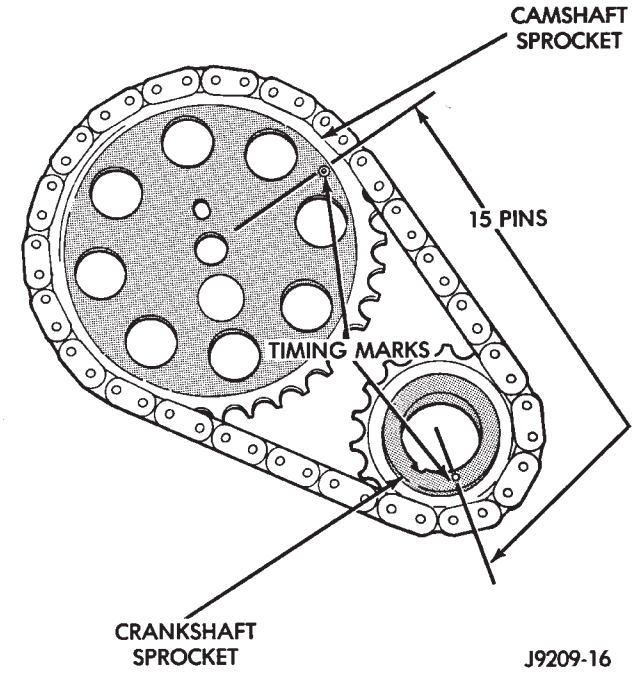

Fig. 7 Verify Sprocket—Chain Installation—Typical

CAMSHAFT

REMOVAL

WARNING: THE COOLANT IN A RECENTLY OPERATED ENGINE IS HOT AND PRESSURIZED. RELEASE THE PRESSURE BEFORE REMOVING THE DRAIN COCK, CAP AND DRAIN PLUGS.

(1) Disconnect negative cable from battery.

(2) Drain the cooling system. DO NOT waste reusable coolant. If the solution is clean, drain it into a clean container for reuse.

(3) Remove the radiator or radiator and condenser, if equipped with A/C (refer to Group 7, Cooling System for the proper procedure).

(4) Remove the air conditioner condenser and receiver/drier assembly as a charged unit, if equipped (refer to Group 24, Heating and Air Conditioning).

(5) Remove the distributor cap and mark the position of the rotor.

(6) Remove the distributor and ignition wires.

(7) Remove the engine cylinder head cover.

(8) Remove the rocker arms, bridges and pivots.

(9) Remove the push rods.

(10) Remove the engine cylinder head and gasket.

(11) Remove the hydraulic valve tappets from the engine cylinder head.

(12) Remove the vibration damper.

(13) Remove the timing case cover.

(14) Remove the timing chain and sprockets.

(15) Remove the front bumper and/or grille, as required.

(16) Remove the camshaft (Fig. 8).

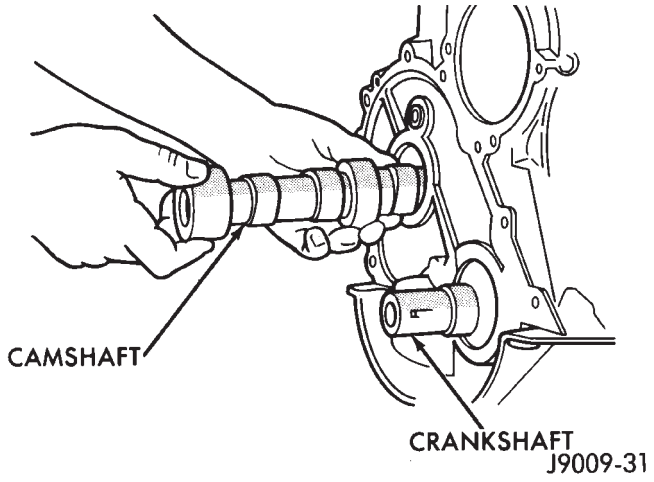

Fig. 8 Camshaft

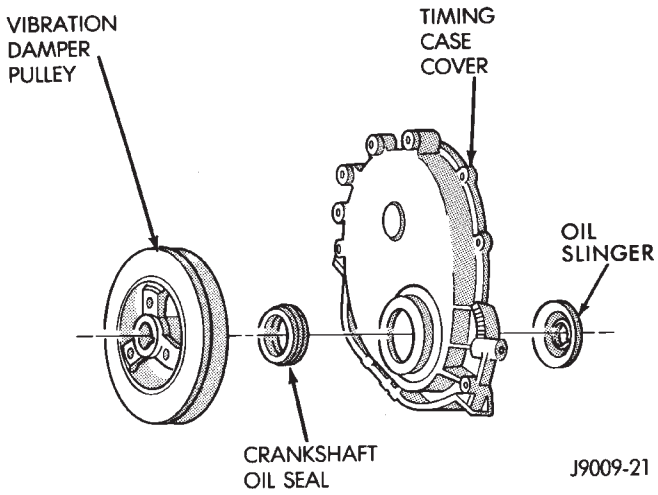

Fig. 9 Timing Case Cover Components

INSPECTION

Inspect the cam lobes for wear.

Inspect the bearing journals for uneven wear pattern or finish.

Inspect the bearings for wear.

Inspect the distributor drive gear for wear.

If the camshaft appears to have been rubbing against the timing case cover, examine the oil pressure relief holes in the rear cam journal. The oil pressure relief holes must be free of debris.

INSTALLATION

(1) Lubricate the camshaft with Mopar Engine Oil Supplement, or equivalent.

(2) Carefully install the camshaft to prevent damage to the camshaft bearings (Fig. 8).

(3) Install the timing chain, crankshaft sprocket and camshaft sprocket with the timing marks aligned.

(4) Install the camshaft sprocket retaining preload bolt. Tighten the bolt to 108 N·m (80 ft. lbs.) torque.

(5) Lubricate the tension spring, the thrust pin and the pin bore in the preload bolt with Mopar Engine Oil Supplement, or equivalent. Install the spring and thrust pin in the preload bolt head.

(6) Install the timing case cover with a replacement oil seal (Fig. 9). Refer to Timing Case Cover Installation.

(7) Install the vibration damper (Fig. 9).

(8) Install the hydraulic valve tappets.

(9) Install the engine cylinder head.

(10) Install the push rods.

(11) Install the rocker arms and pivot and bridge assemblies. Tighten each of the capscrews for each bridge alternately, one turn at a time, to avoid damaging the bridge.

(12) Install the engine cylinder head cover.

(13) Position the oil pump gear. Refer to Distributor in the Component Removal/Installation section of Group 8D, Ignition Systems.

(14) Install the distributor and ignition wires. Refer to Distributor in the Component Removal/Installation section of Group 8D, Ignition Systems.

(13) Install the serpentine drive belt and tighten to the specified tension (refer to Group 7, Cooling System for the proper procedure).

During installation, lubricate the hydraulic valve tappets and all valve components with Mopar Engine Oil Supplement, or equivalent. The Mopar Engine Oil Supplement, or equivalent must remain with the engine oil for at least 1 609 km (1,000 miles). The oil supplement need not be drained until the next scheduled oil change.

(16) Install the A/C condenser and receiver/drier assembly, if equipped (refer to Group 24, Heating and Air Conditioning).

CAUTION: Both service valves must be opened before the air conditioning system is operated.

(17) Install the radiator, connect the hoses and fill the cooling system to the specified level (refer to Group 7, Cooling System for the proper procedure).

(18) Check the ignition timing and adjust as necessary.

(19) Install the grille and bumper, if removed.

(20) Connect negative cable to battery.

CAMSHAFT PIN REPLACEMENT

REMOVAL

WARNING: DO NOT LOOSEN THE RADIATOR DRAIN COCK WITH THE SYSTEM HOT AND PRESSURIZED BECAUSE SERIOUS BURNS FROM COOLANT CAN OCCUR.

(1) Disconnect negative cable from battery.

(2) Drain the radiator. DO NOT waste reusable coolant. Drain the coolant into a clean container.

(3) Remove the fan and shroud.
(4) Disconnect the radiator overflow tube, radiator hoses, automatic transmission fluid cooler pipes (if equipped).
(5) Remove the radiator.
(6) If equipped with air conditioning:

CAUTION: DO NOT loosen or disconnect any air conditioner system fittings. Move the condenser and receiver/drier aside as a complete assembly.

(a) Remove the A/C compressor serpentine drive belt idler pulley.
(b) Disconnect and remove the generator.
(c) Remove the A/C condenser attaching bolts and move the condenser and receiver/drier assembly up and out of the way.
(7) Remove the serpentine drive belt.
(8) Remove the crankshaft vibration damper.
(9) Remove the timing case cover. Clean the gasket material from the cover.
(10) Remove the thrust pin and tension spring from the preload bolt head.
(11) Rotate crankshaft until the crankshaft sprocket timing mark is closest to and on the center line with the camshaft sprocket timing mark (Fig. 10).

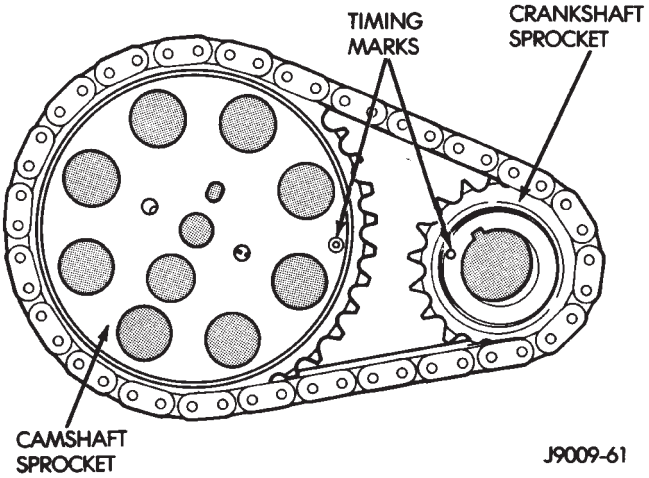

Fig. 10 Timing Chain Alignment—Typical

(12) Remove the camshaft sprocket preload retaining bolt and washer.
(13) Remove the crankshaft oil slinger.
(14) Remove the sprockets and chain as an assembly.

CAUTION: The following procedural step must be accomplished to prevent the camshaft from damaging the rear camshaft plug during pin installation.

(15) Inspect the damaged camshaft pin.
(16) If the pin is a spring-type pin, remove the broken pin by inserting a self-tapping screw into the pin and carefully pulling the pin from the camshaft.
(17) If the pin is a dowel-type pin, center-punch it. Ensure the exact center is located when center-punching the pin.

CAUTION: Cover the opened oil pan area to prevent metal chips from entering the pan.

(18) Drill into the pin center with a 4 mm (5/32 inch) drill bit.
(19) Insert a self-tapping screw into the drilled pin and carefully pull the pin from the camshaft.

CAMSHAFT BEARINGS

The camshaft rotates within four steel-shelled, babbitt-lined bearings that are pressed into the cylinder block and then line reamed. The camshaft bearing bores and bearing diameters are not the same size. They are stepped down in 0.254 mm (0.010 inch) increments from the front bearing (largest) to the rear bearing (smallest). This permits easier removal and installation of the camshaft. The camshaft bearings are pressure lubricated.

It is not advisable to attempt to replace camshaft bearings unless special removal and installation tools are available.

Camshaft end play is maintained by the load placed on the camshaft by the sprocket preload bolt tension spring and thrust pin.

INSTALLATION

(1) Clean the camshaft pin hole.
(2) Compress the center of the replacement spring pin with vise grips.
(3) Carefully drive the pin into the camshaft pin hole until it is seated.
(4) Install the camshaft sprocket, crankshaft sprocket and timing chain with the timing marks aligned (Fig. 10).
(5) To verify correct installation of the timing chain, turn the crankshaft to position the camshaft sprocket timing mark as shown in Fig. 11. Count the number of chain pins between the timing marks of both sprockets. There must be 15 pins.
(6) Install the crankshaft oil slinger.
(7) Tighten the camshaft sprocket preload bolt to 108 N·m (80 ft. lbs.) torque.
(8) Check the valve timing.
(9) Lubricate the tension spring, the thrust pin and the pin bore in the preload bolt with Mopar Engine Oil Supplement, or equivalent. Install the spring and thrust pin in the preload bolt head.
(10) Coat both sides of the replacement timing case cover gasket with gasket sealer. Apply a 3 mm (1/8 inch) bead of Mopar Silicone Rubber Adhesive Sealant, or equivalent to the joint formed at the oil pan and cylinder block.
(11) Position the timing case cover on the oil pan gasket and the cylinder block.

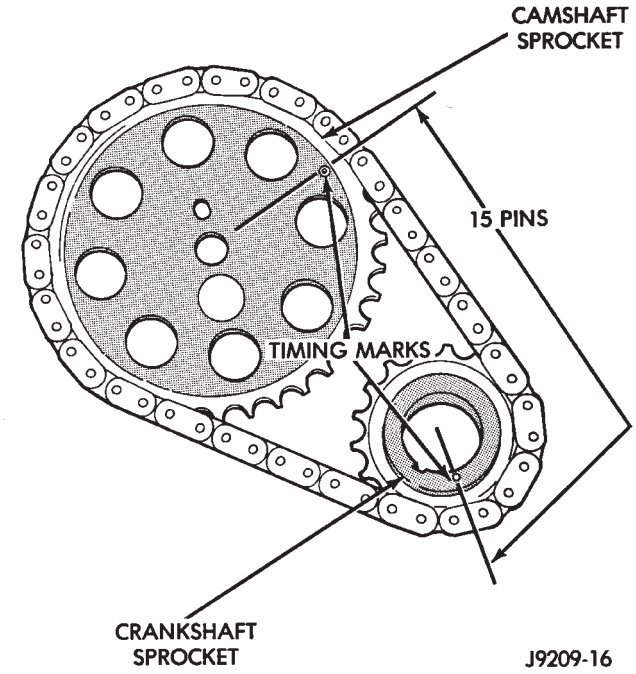

Fig. 11 Verify Crankshaft—Camshaft Installation—Typical

(12) Place Timing Case Cover Alignment and Seal Installation Tool 6139 in the crankshaft opening in the cover (Fig. 12).

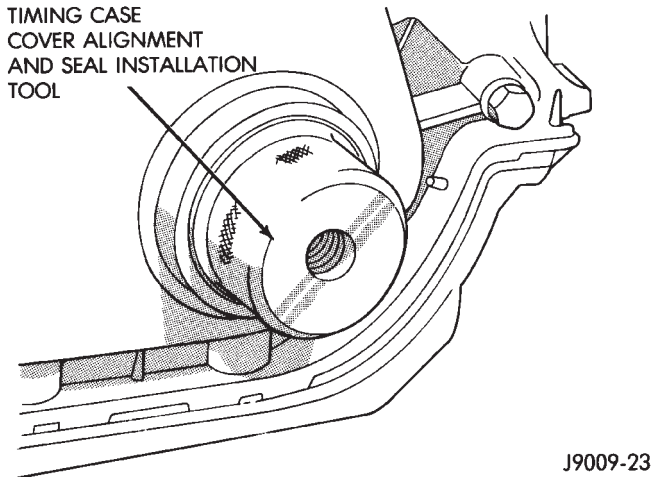

Fig. 12 Timing Case Cover Alignment and Seal Installation Tool 6139

(13) Install the timing case cover-to-cylinder block bolts. Install the oil pan-to-timing case cover bolts.

(14) Tighten the 1/4 inch cover-to-block bolts to 7 N·m (60 in. lbs.) torque. Tighten the 5/16 inch front cover-to-block bolts to 22 N·m (192 in. lbs.) torque. Tighten the oil pan-to-cover 1/4 inch bolts to 14 N·m (120 in. lbs.) torque. Tighten the oil pan-to-cover 5/16 inch bolts to 18 N·m (156 in. lbs.) torque.

(15) Remove the cover alignment tool and install a replacement oil seal into the cover.

(16) Install the vibration damper on the crankshaft.

(17) Lubricate and tighten the damper bolt to 108 N·m (80 ft. lbs.) torque.

(18) If equipped with air conditioning:

(a) Install the A/C compressor serpentine drive belt idler pulley.

(b) Install the generator.

(c) Install the A/C condenser and receiver/drier assembly.

(19) Install the serpentine drive belt on the pulleys and tighten (refer to Group 7, Cooling System for the specifications and procedures).

(20) Install the radiator. Connect the radiator hoses and automatic transmission fluid cooler pipes, if equipped. Fill the cooling system.

(21) Install the fan and shroud.

(22) Connect negative cable to battery.

OIL PAN

REMOVAL

(1) Disconnect negative cable from battery.

(2) Raise the vehicle.

(3) Remove the oil pan drain plug and drain the engine oil.

(4) Disconnect the exhaust pipe at the exhaust manifold.

(5) Disconnect the exhaust hanger at the catalytic converter and lower the pipe.

(6) Remove the starter motor.

(7) Remove the engine flywheel and transmission torque converter housing access cover.

(8) If equipped with an oil level sensor, disconnect the sensor.

(9) Position a jack stand directly under the engine vibration damper.

(10) Place a piece of wood (2 x 2) between the jack stand and the engine vibration damper.

(11) Remove the engine mount through bolts.

(12) Using the jack stand, raise the engine until adequate clearance is obtained to remove the oil pan.

(13) Remove the oil pan bolts. Carefully slide the oil pan and gasket to the rear. If equipped with an oil level sensor, take care not to damage the sensor.

CLEANING

Clean the block and pan gasket surfaces.

INSTALLATION

(1) Fabricate 4 alignment dowels from 1/4 x 1 1/2 inch bolts. Cut the head off the bolts and cut a slot into the top of the dowel. This will allow easier installation and removal with a screwdriver (Fig. 1).

(2) Install two dowels in the timing case cover. Install the other two dowels in the cylinder block (Fig. 2).

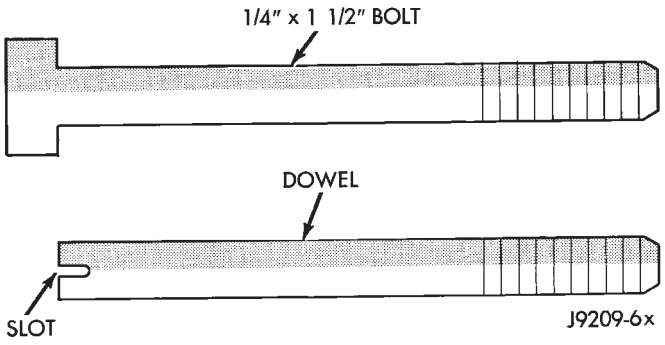

Fig. 1 Fabrication of Alignment Dowels

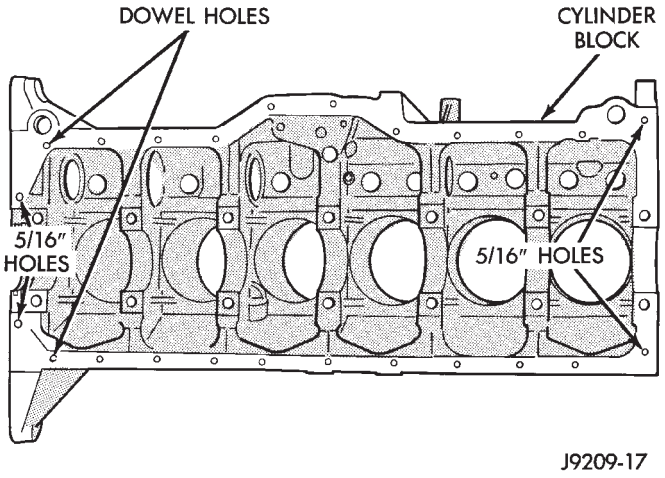

Fig. 2 Position of Dowels in Cylinder Block

(3) Slide the one-piece gasket over the dowels and onto the block and timing case cover.

(4) Position the oil pan over the dowels and onto the gasket. If equipped with an oil level sensor, take care not to damage the sensor.

(5) Install the 1/4 inch oil pan bolts. Tighten these bolts to 14 N·m (120 in. lbs.) torque. Install the 5/16 inch oil pan bolts (Fig. 3). Tighten these bolts to 18 N·m (156 in. lbs.) torque.

(6) Remove the dowels. Install the remaining 1/4 inch oil pan bolts. Tighten these bolts to 14 N·m (120 in. lbs.) torque.

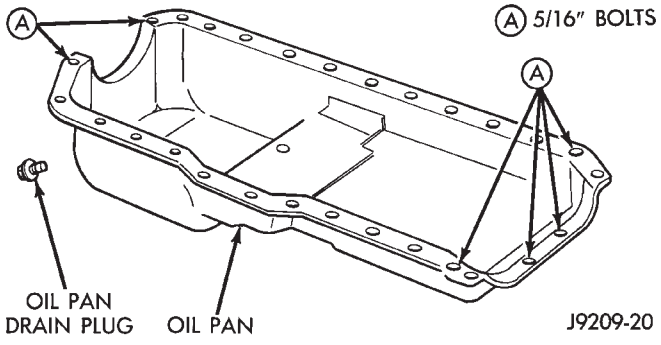

Fig. 3 Position of 5/16 inch Oil Pan Bolts

(7) Lower the engine until it is properly located on the engine mounts.

(8) Install the through bolts and tighten the nuts.

(9) Lower the jack stand and remove the piece of wood.

(10) Install the engine flywheel and transmission torque converter housing access cover.

(11) Install the engine starter motor.

(12) Connect the exhaust pipe to the hanger and to the gine exhaust manifold.

(13) Install the oil pan drain plug (Fig. 3). Tighten the plug to 34 N·m (25 ft. lbs.) torque.

(14) Lower the vehicle.

(15) Connect negative cable to battery.

(16) Fill the oil pan with engine oil to the specified level.

WARNING: USE EXTREME CAUTION WHEN THE ENGINE IS OPERATING. DO NOT STAND IN A DIRECT LINE WITH THE FAN. DO NOT PUT YOUR HANDS NEAR THE PULLEYS, BELTS OR FAN. DO NOT WEAR LOOSE CLOTHING.

(18) Start the engine and inspect for leaks.

LUBRICATION SYSTEM

A gear—type positive displacement pump is mounted at the underside of the block opposite the No. 4 main bearing. The pump draws oil through the screen and inlet tube from the sump at the rear of the oil pan. The oil is driven between the drive and idler gears and pump body, then forced through the outlet to the block. An oil gallery in the block channels the oil to the inlet side of the full flow oil filter. After passing through the filter element, the oil passes from the center outlet of the filter through an oil gallery that channels the oil up to the main gallery which extends the entire length of the block.

Galleries extend downward from the main oil gallery to the upper shell of each main bearing. The crankshaft is drilled internally to pass oil from the main bearing journals (except number 4 main bearing journal) to the connecting rod journals. Each connecting rod bearing cap has a small squirt hole, oil passes through the squirt hole and is thrown off as the rod rotates. This oil throwoff lubricates the camshaft lobes, distributor drive gear, cylinder walls, and piston pins.

The hydraulic valve tappets receive oil directly from the main oil gallery. Oil is provided to the camshaft bearing through galleries. The front camshaft bearing journal passes oil through the camshaft sprocket to the timing chain. Oil drains back to the oil pan under the number one main bearing cap.

The oil supply for the rocker arms and bridged pivot assemblies is provided by the hydraulic valve tappets which pass oil through hollow push rods to a hole in the corresponding rocker arm. Oil from the rocker arm lubricates the valve train components, then passes down through the push rod guide holes in the cylinder head past the valve tappet area, and returns to the oil pan.

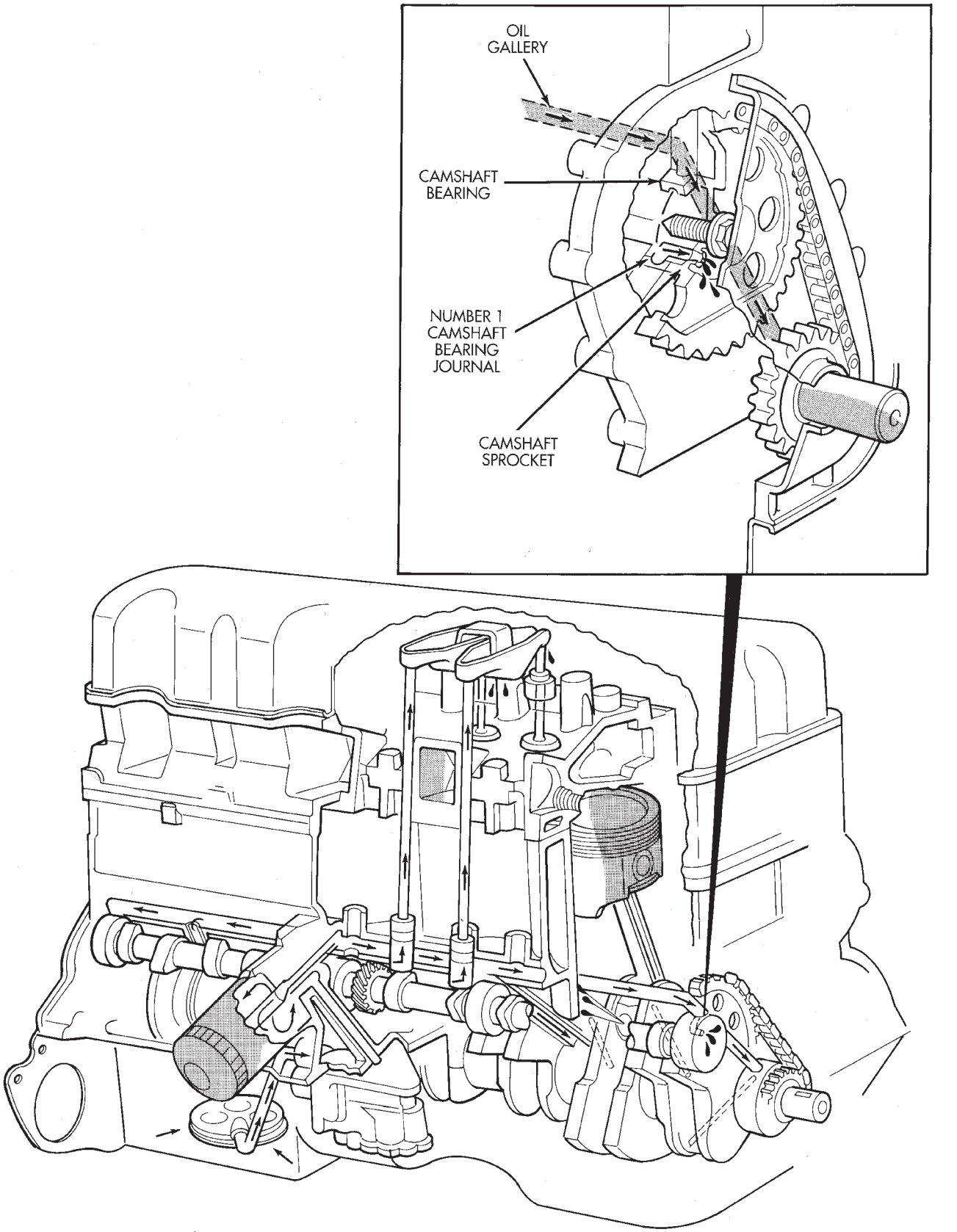

Fig. 4 Oil Lubrication System

OIL PUMP

A gear-type oil pump is mounted at the underside of the cylinder block opposite the No.4 main bearing.

The pump incorporates a nonadjustable pressure relief valve to limit maximum pressure to 517 kPa (75 psi). In the relief position, the valve permits oil to bypass through a passage in the pump body to the inlet side of the pump.

Oil pump removal or replacement will not affect the distributor timing because the distributor drive gear remains in mesh with the camshaft gear.

REMOVAL

(1) Drain the engine oil.
(2) Remove the oil pan.
(3) Remove the pump-to-cylinder block attaching bolts. Remove the pump assembly with gasket (Fig. 5).

CAUTION: If the oil pump is not to be serviced, DO NOT disturb position of oil inlet tube and strainer assembly in pump body. If the tube is moved within the pump body, a replacement tube and strainer assembly must be installed to assure an airtight seal.

INSTALLATION

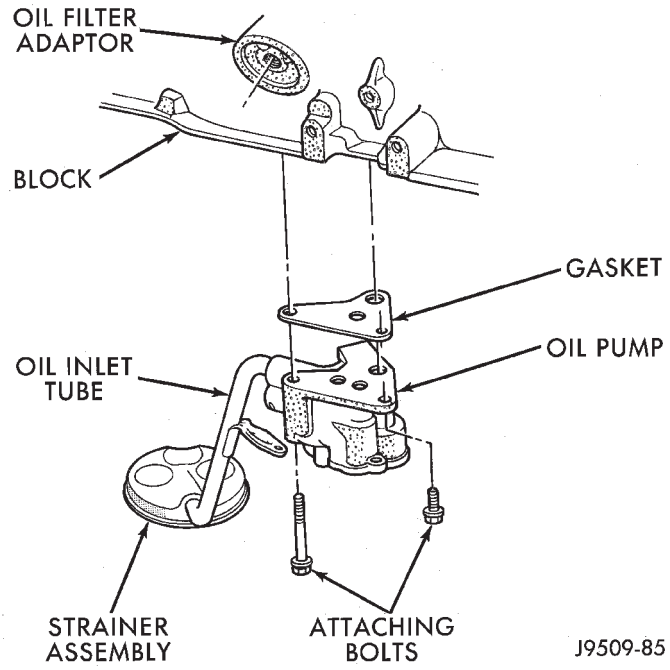

Fig. 5 Oil Pump Assembly

(1) Install the oil pump on the cylinder block using a replacement gasket. Tighten the bolts to 23 N·m (17 ft. lbs.) torque.
(2) Install the oil pan.
(3) Fill the oil pan with oil to the specified level.

OIL PUMP PRESSURE

The MINIMUM oil pump pressure is 89.6 kPa (13 psi) at 600 rpm. The MAXIMUM oil pump pressure is 255-517 kPa (37-75 psi) at 1600 rpm or more.

PISTONS AND CONNECTING RODS

REMOVAL

(1) Remove the engine cylinder head cover.
(2) Remove the rocker arms, bridges and pivots.
(3) Remove the push rods.
(4) Remove the engine cylinder head.
(5) Position the pistons one at a time near the bottom of the stroke. Use a ridge reamer to remove the ridge from the top end of the cylinder walls. Use a protective cloth to collect the cuttings.
(6) Raise the vehicle.
(7) Drain the engine oil.
(8) Remove the oil pan and gasket.
(9) Remove the connecting rod bearing caps and inserts. Mark the caps and rods with the cylinder bore location. The connecting rods and caps are stamped with a two letter combination (Fig. 1).

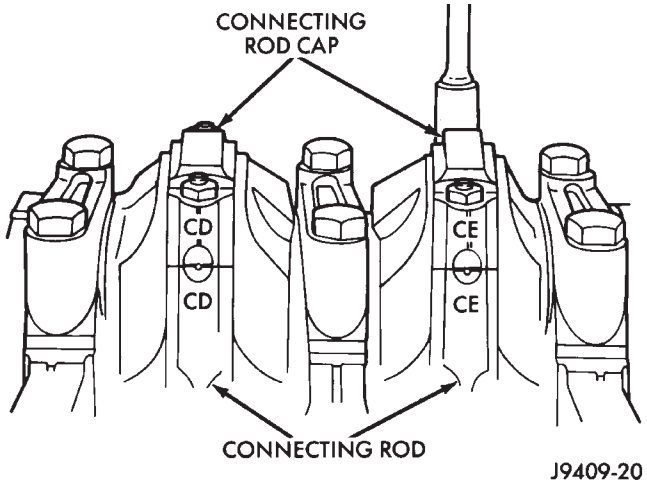

Fig. 1 Stamped Connecting Rods and Caps

(10) Lower the vehicle until it is about 2 feet from the floor.

CAUTION: Ensure that the connecting rod bolts DO NOT scratch the crankshaft journals or cylinder walls. Short pieces of rubber hose, slipped over the rod bolts will provide protection during removal.

(11) Have an assistant push the piston and connecting rod assemblies up and through the top of the cylinder bores (Fig. 2).

INSPECTION—CONNECTING ROD

CONNECTING ROD BEARINGS

Inspect the connecting rod bearings for scoring and bent alignment tabs (Figs. 3 and 4). Check the bear-

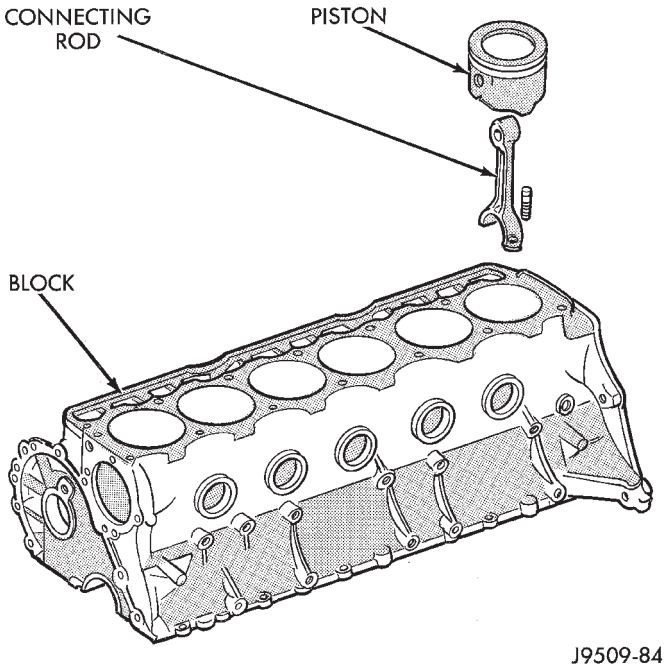

Fig. 2 Removal of Connecting Rod and Piston Assembly

ings for normal wear patterns, scoring, grooving, fatigue and pitting (Fig. 5). Replace any bearing that shows abnormal wear.

Inspect the connecting rod journals for signs of scoring, nicks and burrs.

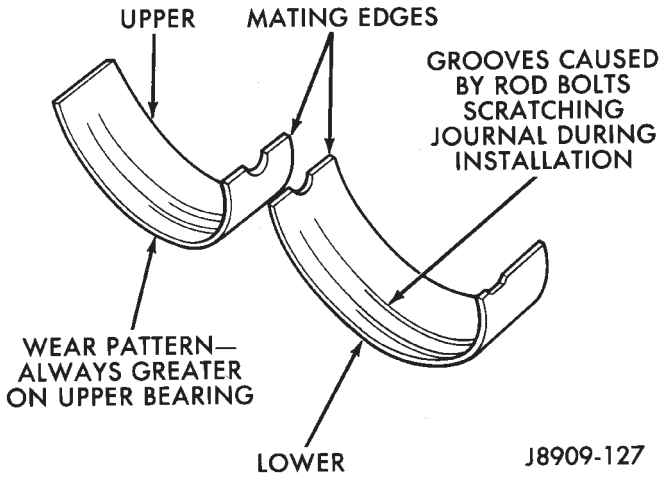

Fig. 3 Connecting Rod Bearing Inspection

CONNECTING RODS

Misaligned or bent connecting rods can cause abnormal wear on pistons, piston rings, cylinder walls, connecting rod bearings and crankshaft connecting rod journals. If wear patterns or damage to any of these components indicate the probability of a misaligned connecting rod, inspect it for correct rod alignment. Replace misaligned, bent or twisted connecting rods.

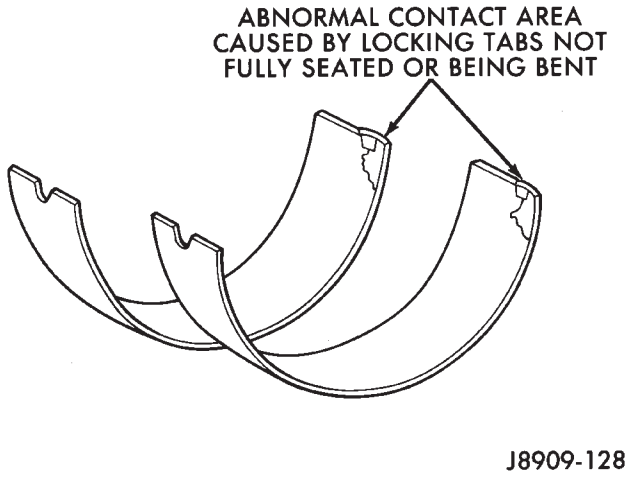

Fig. 4 Locking Tab Inspection

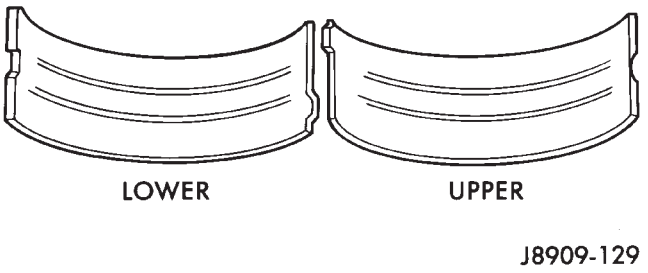

Fig. 5 Scoring Caused by Insufficient Lubrication or by Damaged Crankshaft Pin Journal

BEARING-TO-JOURNAL CLEARANCE

(1) Wipe the oil from the connecting rod journal.

(2) Use short rubber hose sections over rod bolts during installation.

(3) Lubricate the upper bearing insert and install in connecting rod.

(4) Use piston ring compressor to install the rod and piston assemblies. The oil squirt holes in the rods must face the camshaft. The arrow on the piston crown should point to the front of the engine (Fig. 6). Verify that the oil squirt holes in the rods face the camshaft and that the arrows on the pistons face the front of the engine.

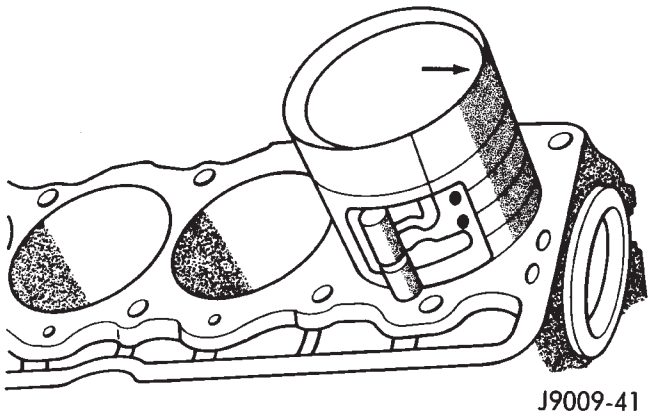

Fig. 6 Rod and Piston Assembly Installation

(5) Install the lower bearing insert in the bearing cap. The lower insert must be dry. Place strip of Plastigage across full width of the lower insert at the center of bearing cap. Plastigage must not crumble in use. If brittle, obtain fresh stock.

(6) Install bearing cap and connecting rod on the journal and tighten nuts to 45 N·m (33 ft. lbs.) torque. DO NOT rotate crankshaft. Plastigage will smear, resulting in inaccurate indication.

(7) Remove the bearing cap and determine amount of bearing-to-journal clearance by measuring the width of compressed Plastigage (Fig. 7). Refer to Engine Specifications for the proper clearance. **Plastigage should indicate the same clearance across the entire width of the insert. If the clearance varies, it may be caused by either a tapered journal, bent connecting rod or foreign material trapped between the insert and cap or rod.**

(8) If the correct clearance is indicated, replacement of the bearing inserts is not necessary. Remove the Plastigage from crankshaft journal and bearing insert. Proceed with installation.

(9) If bearing-to-journal clearance exceeds the specification, install a pair of 0.0254 mm (0.001 inch) undersize bearing inserts. All the odd size inserts must be on the bottom. The sizes of the service replacement bearing inserts are stamped on the backs of the inserts. Measure the clearance as described in the previous steps.

(10) The clearance is measured with a pair of 0.0254 mm (0.001 inch) undersize bearing inserts installed. This will determine if two 0.0254 mm (0.001 inch) undersize inserts or another combination is needed to provide the correct clearance (refer to Connecting Rod Bearing Fitting Chart).

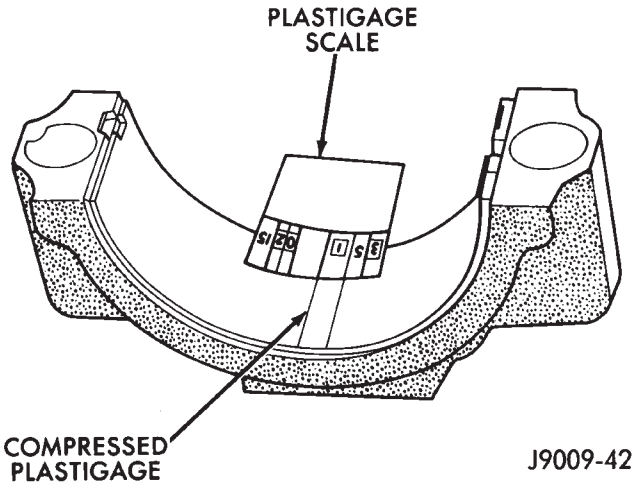

Fig. 7 Measuring Bearing Clearance with Plastigage

FOR EXAMPLE: If the initial clearance was 0.0762 mm (0.003 inch), 0.025 mm (0.001 inch) undersize inserts would reduce the clearance by 0.025 mm (0.001 inch). The clearance would be 0.002 inch and within specification. A 0.051 mm (0.002 inch) undersize insert would reduce the initial clearance an additional 0.013 mm (0.0005 inch). The clearance would then be 0.038 mm (0.0015 inch).

(11) Repeat the Plastigage measurement to verify your bearing selection prior to final assembly.

(12) Once you have selected the proper insert, install the insert and cap. Tighten the connecting rod bolts to 45 N·m (33 ft. lbs.) torque.

CONNECTING ROD BEARING FITTING CHART

Crankshaft Journal		Corresponding Connecting Rod Bearing Insert	
Color Code	Diameter	Upper Insert Size	Lower Insert Size
Yellow	53.2257-53.2079 mm (2.0955-2.0948 in.)	Yellow - Standard	Yellow - Standard
Orange	53.2079-53.1901 mm (2.0948-2.0941 in.) 0.0178 mm (0.0007 in.) Undersize	Yellow - Standard	Blue - Undersize 0.025 mm (0.001 in.)
Blue	53.1901-53.1724 mm (2.0941-2.0934 in.) 0.0356 mm (0.0014 in.) Undersize	Blue - Undersize 0.025 mm (0.001 in.)	Blue - Undersize 0.025 mm (0.001 in.)
Red	52.9717-52.9539 mm (2.0855-2.0848 in.) 0.254 mm (0.010 in.) Undersize	Red - Undersize 0.254 mm (0.010 in.)	Red - Undersize 0.254 mm (0.010 in.)

J9409-24

SIDE CLEARANCE MEASUREMENT

Slide snug-fitting feeler gauge between the connecting rod and crankshaft journal flange. Refer to Engine Specifications for the proper clearance. Replace the connecting rod if the side clearance is not within specification.

PISTON FITTING

BORE GAUGE METHOD

(1) To correctly select the proper size piston, a cylinder bore gauge, Special Tool 6879 or equivalent, capable of reading in .0001″ INCREMENTS with gauge ring Special Tool 6884 is required. If a bore gauge is not available, do not use an inside micrometer.

(2) Set the bore gauge to the gauge ring and zero gauge.

(3) Remove gauge from ring and check cylinder as shown in (Fig. 8) bore and record reading.

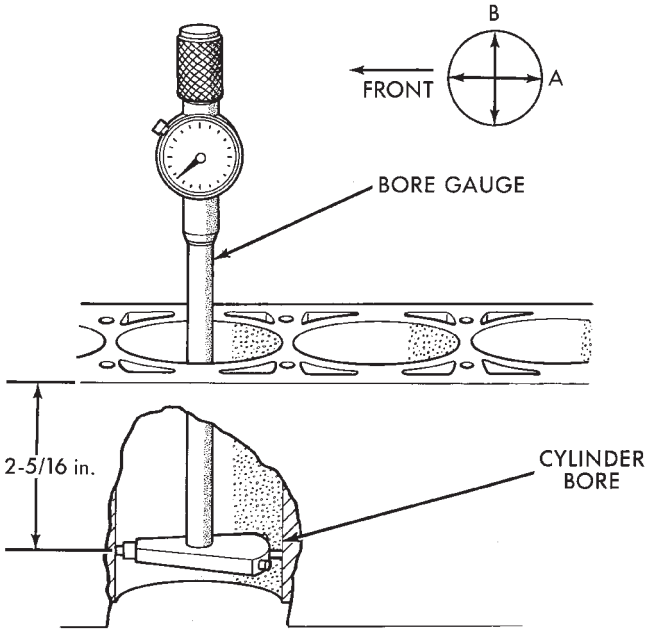

Fig. 8 Bore Gauge

(4) Measure the inside diameter of the cylinder bore at a point 58.725 mm (2-5/16 inches) below top of bore. Start perpendicular (across or at 90 degrees) to the axis of the crankshaft at point B and then take an additional bore reading 90 degrees to that at point A.

(5) Recheck bore gauge in gauge ring, bore gauge should read zero. If gauge does not read zero, reset gauge and start over with procedure.

The coated pistons will be serviced with the piston pin and connecting rod pre-assembled. **The coated piston connecting rod assembly can be used to service previous built engines and MUST be replaced as complete sets.** Tin coated pistons should not be used as replacements for the new coated pistons.

The coating material is applied to the piston after the final piston machining process. Measuring the outside diameter of a coated piston will not provide accurate results. Therefore, measuring the inside diameter of the cylinder bore with a dial Bore Gauge is **MANDATORY**. To correctly select the proper size piston, a cylinder bore gauge capable of reading .0001″ increments is required.

Piston installation into the cylinder bore requires slightly more pressure than that required for non-coated pistons. The bonded coating on the piston will give the appearance of a line-to-line fit with the cylinder bore.

CYLINDER BORE SIZE	PISTON LETTER SIZE
3.8759 to 3.8763	B
3.8763 to 3.8767	C
3.8767 to 3.8771	D

J9509-92

Fig. 9 Piston Size Chart

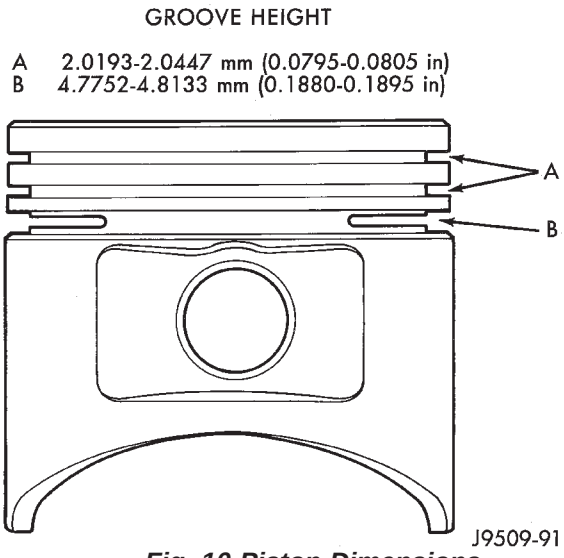

Fig. 10 Piston Dimensions

PISTON PIN

Piston pins are press-fitted into the connecting rods and require no locking device. The piston, piston pin and connecting rod are replaced as an assembly.

PISTON RING FITTING

(1) Carefully clean the carbon from all ring grooves. Oil drain openings in the oil ring groove and pin boss must be clear. DO NOT remove metal from the grooves or lands. This will change ring-to-groove clearances and will damage the ring-to-land seating.

(2) Be sure the piston ring grooves are free of nicks and burrs.

(3) Measure the ring side clearance with a feeler gauge fitted snugly between the ring land and ring (Fig. 11). Rotate the ring in the groove. It must move freely around circumference of the groove.

(4) Place ring in the cylinder bore and push down with inverted piston to position near lower end of the ring travel. Measure ring gap with a feeler gauge fitting snugly between ring ends (Fig. 12). The correct compression ring end gap is 0.25-0.51 mm (0.010-0.020 inch). The correct oil control ring end gap is 0.381-1.397 mm (0.015-0.055 inch).

	Millimeters	Inches
No. 1 Compression	0.025-0.081 (0.043 Preferred)	0.001-0.0032 (0.0017 Preferred)
No. 2 Compression	0.025-0.081 (0.043 Preferred)	0.001-0.0032 (0.0017 Preferred)
Oil Control	0.025-0.241 (0.08 Preferred)	0.001-0.0095 (0.003 Preferred)

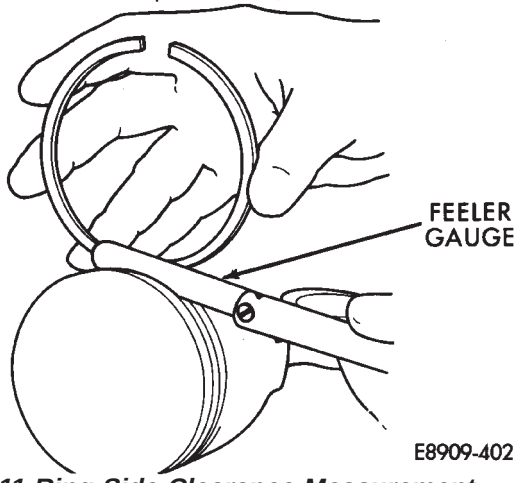

Fig. 11 Ring Side Clearance Measurement

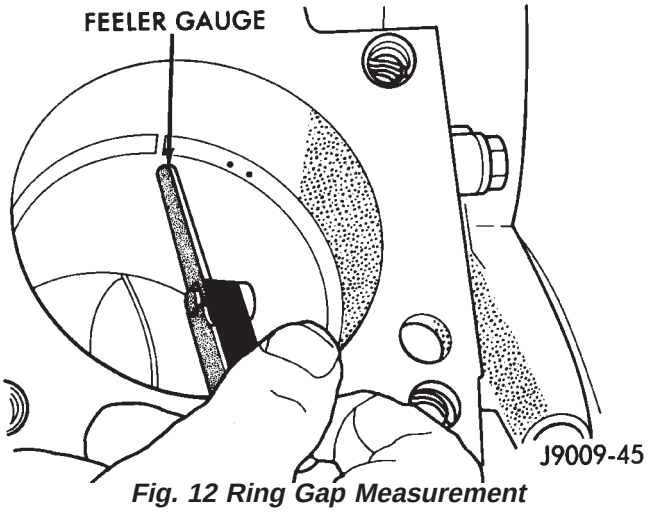

Fig. 12 Ring Gap Measurement

(5) Install the oil control rings according to instructions in the package. It is not necessary to use a tool to install the upper and lower rails. Insert oil rail spacer first, then side rails.

(6) The two compression rings are different and cannot be interchanged. The top ring (Fig. 13) is a moly ring (the scraping edge is gray in color). The second ring (Fig. 14) is a black cast iron ring (the scraping edge is black in color when new). The compression rings may also be identified by 1 or 2 dots on the top surface of the ring (Figs. 13 and 14).

(7) The second compression ring (black cast iron) has a chamfer on the BOTTOM of the inside edge (Fig. 15). This ring may also have 2 dots located on the top surface.

(8) Using a ring installer, install the second compression ring with the chamfer facing down (Fig. 15). The two dots will be facing up.

(9) The top compression ring (the scraping edge is gray in color) has a chamfer on the TOP of the inside edge (Fig. 15). This ring may also have 1 dot located on the top surface.

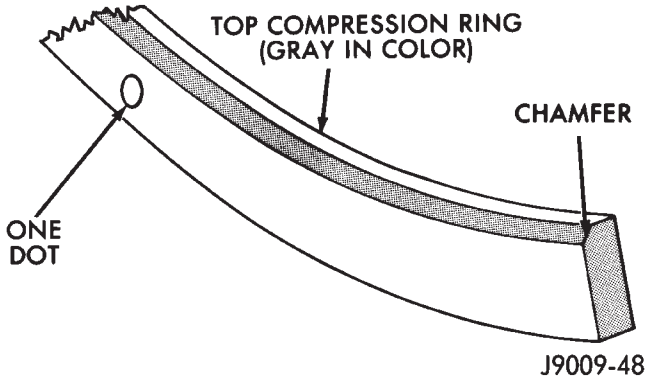

Fig. 13 Top Compression Ring Identification

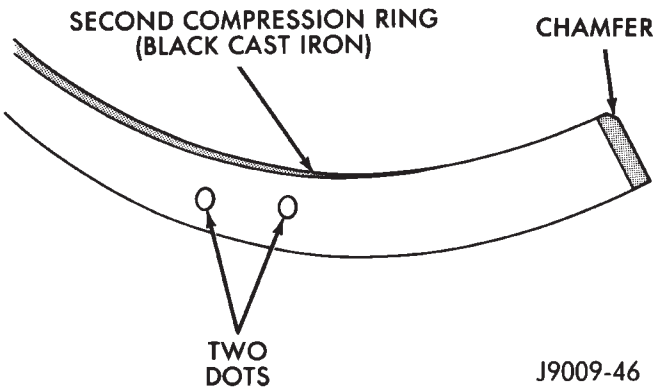

Fig. 14 Second Compression Ring Identification

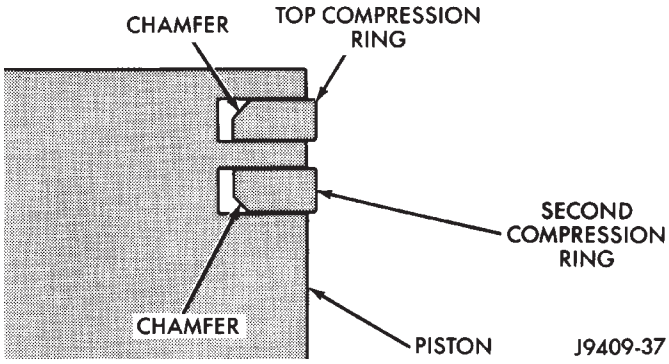

Fig. 15 Compression Ring Chamfer Location

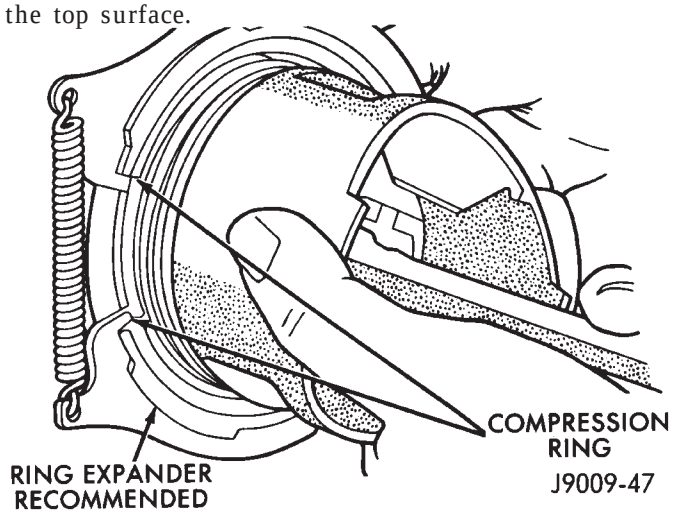

Fig. 16 Compression Ring Installation

(10) Using a ring installer, install the top ring with the chamfer facing up (Fig. 16). The dot will be facing up.

(11) Position the gaps on the piston (Fig. 17):

- Oil spacer - Gap on center line of piston pin bore.
- Oil rails - Gap 180° apart on centerline of piston skirt.
- No. 2 Compression ring - Gap 180° from top oil rail gap.
- No. 1 Compression ring - Gap 180° from No. 2 compression ring gap.

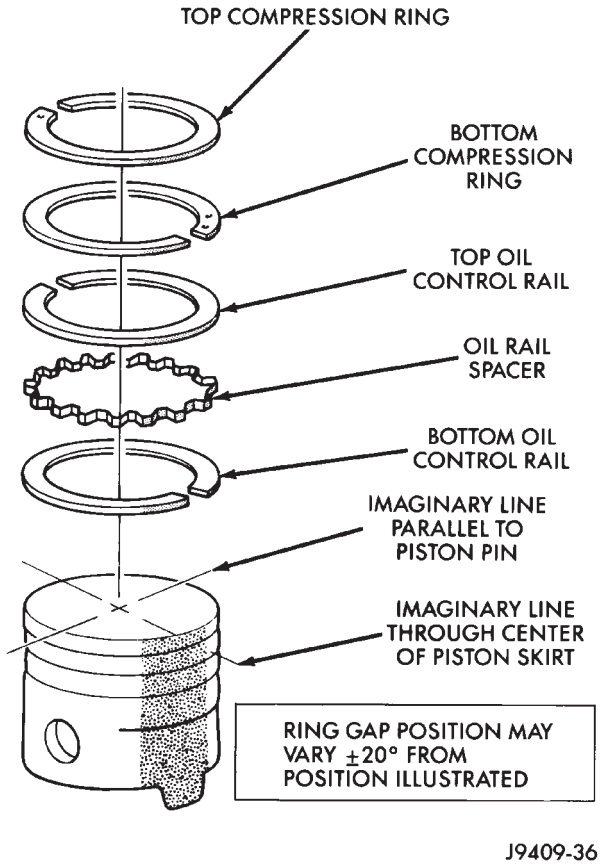

Fig. 17 Ring Gap Position

CLEANING

Clean the cylinder bores thoroughly. Apply a light film of clean engine oil to the bores with a clean lint-free cloth.

INSTALLATION

(1) Install the piston rings on the pistons if removed.

(2) Lubricate the piston and rings with clean engine oil.

CAUTION: Ensure that connecting rod bolts DO NOT scratch the crankshaft journals or cylinder walls. Short pieces of rubber hose slipped over the connecting rod bolts will provide protection during installation.

(3) Use a piston ring compressor to install the connecting rod and piston assemblies through the top of the cylinder bores (Fig. 18).

(4) Ensure the arrow on the piston top points to the front of the engine (Fig. 18).

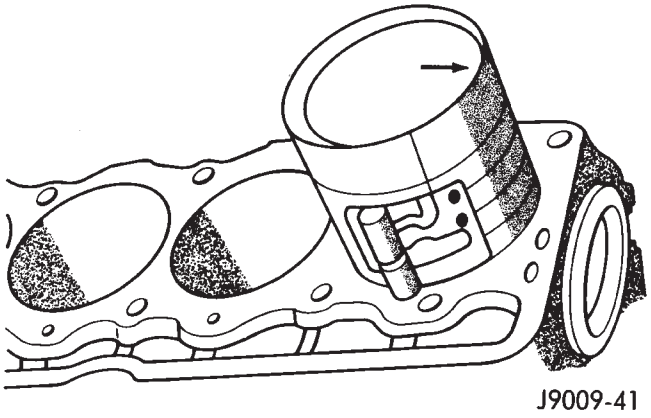

Fig. 18 Rod and Piston Assembly Installation

(5) Raise the vehicle.

Each bearing insert is fitted to its respective journal to obtain the specified clearance between the bearing and the journal. In production, the select fit is obtained by using various-sized, color-coded bearing inserts as listed in the Connecting Rod Bearing Fitting Chart. The color code appears on the edge of the bearing insert. The size is not stamped on inserts used for production of engines.

The rod journal is identified during the engine production by a color-coded paint mark on the adjacent cheek or counterweight toward the flange (rear) end of the crankshaft. The color codes used to indicate journal sizes are listed in the Connecting Rod Bearing Fitting Chart.

When required, upper and lower bearing inserts of different sizes may be used as a pair (refer to Connecting Rod Bearing Fitting Chart). A standard size insert is sometimes used in combination with a 0.025 mm (0.001 inch) undersize insert to reduce clearance 0.013 mm (0.0005 inch).

CAUTION: DO NOT intermix bearing caps. Each connecting rod and bearing cap are stamped with the cylinder number. The stamp is located on a machined surface adjacent to the oil squirt hole that faces the camshaft side of the cylinder block.

(6) Install the connecting rod bearing caps and inserts in the same positions as removed.

CAUTION: Verify that the oil squirt holes in the rods face the camshaft and that the arrows on the pistons face the front of the engine.

(7) Install the oil pan and gaskets as outlined in the installation procedure.

(8) Lower the vehicle.

(9) Install the engine cylinder head, push rods, rocker arms, bridges, pivots and engine cylinder head cover.

(10) Fill the crankcase with engine oil.

CRANKSHAFT MAIN BEARINGS

REMOVAL

(1) Disconnect negative cable from battery.

(2) Remove the spark plugs.

(3) Raise the vehicle.

(4) Remove the oil pan and oil pump.

(5) Remove only one main bearing cap and lower insert at a time (Fig. 1).

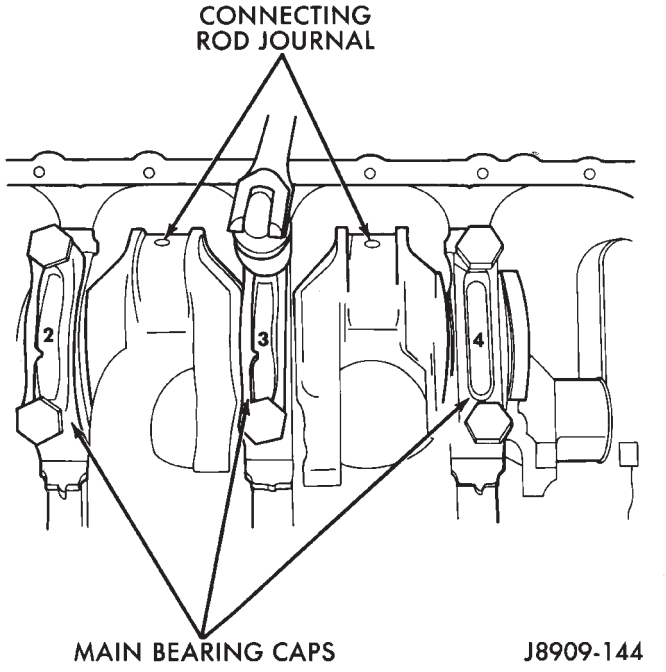

Fig. 1 Removing Main Bearing Caps and Lower Inserts

(6) Remove the lower insert from the bearing cap.

(7) Remove the upper insert by LOOSENING (DO NOT REMOVE) all of the other bearing caps. Now insert a small cotter pin tool in the crankshaft journal oil hole. Bend the cotter pin as illustrated to fabricate the tool (Fig. 2). With the cotter pin tool in place, rotate the crankshaft so that the upper bearing insert will rotate in the direction of its locking tab. Because there is no hole in the No.3 main journal, use a tongue depressor or similar soft-faced tool to remove the bearing insert (Fig. 2). After moving the insert approximately 25 mm (1 inch), it can be removed by applying pressure under the tab.

(8) Using the same procedure described above, remove the remaining bearing inserts one at a time for inspection.

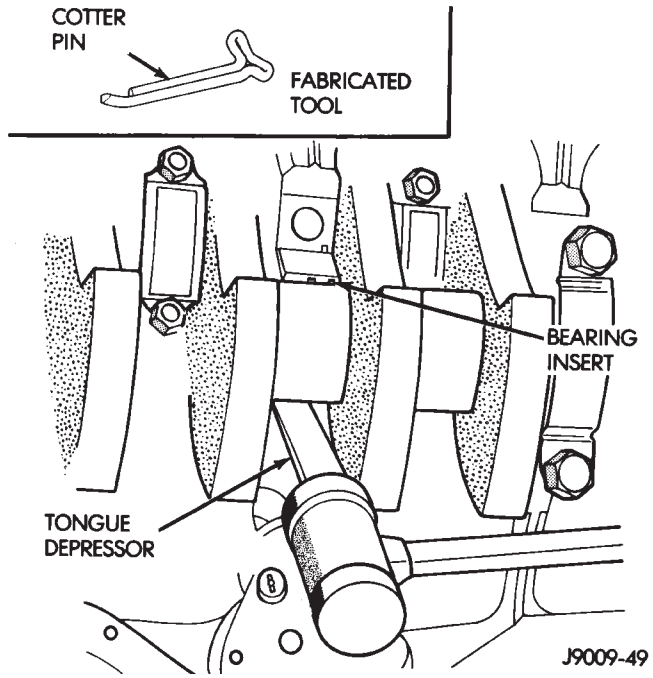

Fig. 2 Removing Upper Inserts

INSPECTION

Wipe the inserts clean and inspect for abnormal wear patterns and for metal or other foreign material imbedded in the lining. Normal main bearing insert wear patterns are illustrated (Fig. 3).

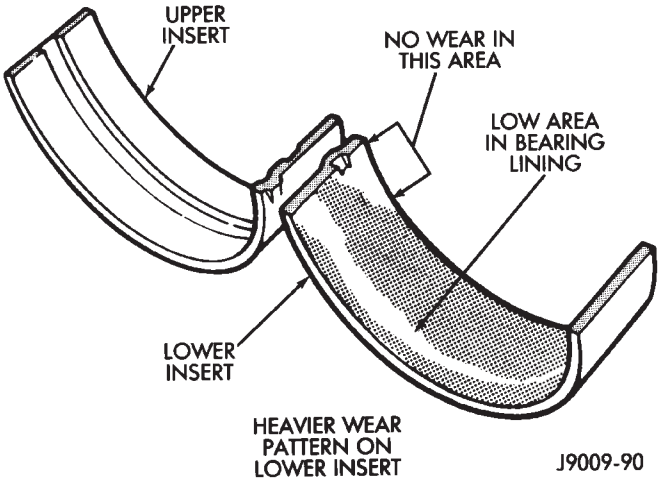

Fig. 3 Main Bearing Wear Patterns

If any of the crankshaft journals are scored, remove the engine for crankshaft repair.

Inspect the back of the inserts for fractures, scrapings or irregular wear patterns.

Inspect the upper insert locking tabs for damage.

Replace all damaged or worn bearing inserts.

FITTING (CRANKSHAFT INSTALLED)

The main bearing caps, numbered (front to rear) from 1 through 7 have an arrow to indicate the for-

ward position. The upper main bearing inserts are grooved to provide oil channels while the lower inserts are smooth.

Each bearing insert pair is selectively fitted to its respective journal to obtain the specified operating clearance. In production, the select fit is obtained by using various-sized color-coded bearing insert pairs as listed in the Main Bearing Fitting Chart. The bearing color code appears on the edge of the insert. **The size is not stamped on bearing inserts used for engine production.**

The main bearing journal size (diameter) is identified by a color-coded paint mark on the adjacent cheek. The rear main journal, is identified by a color-coded paint mark on the crankshaft rear flange.

When required, upper and lower bearing inserts of different sizes may be used as a pair. A standard size insert is sometimes used in combination with a 0.025 mm (0.001 inch) undersize insert to reduce the clearance by 0.013 mm (0.0005 inch). **Never use a pair of bearing inserts with greater than a 0.025 mm (0.001 inch) difference in size (Fig. 4).**

Insert	Correct	Incorrect
Upper	Standard	Standard
Lower	0.025 mm (0.001 in.) Undersize	0.051 mm (0.002 in.) Undersize

J9109-179

Fig. 4 Bearing Insert Pairs

When replacing inserts, the odd size inserts must be either all on the top (in cylinder block) or all on the bottom (in main bearing cap).

Once the bearings have been properly fitted, proceed to Crankshaft Main Bearing—Installation.

BEARING-TO-JOURNAL CLEARANCE (CRANKSHAFT INSTALLED)

When using Plastigage, check only one bearing clearance at a time.

Install the grooved main bearings into the cylinder block and the non-grooved bearings into the bearing caps.

Install the crankshaft into the upper bearings dry.

Place a strip of Plastigage across full width of the crankshaft journal to be checked.

Install the bearing cap and tighten the bolts to 108 N·m (80 ft. lbs.) torque.

DO NOT rotate the crankshaft. This will cause the Plastigage to shift, resulting in an inaccurate reading. Plastigage must not be permitted to crumble. If brittle, obtain fresh stock.

Remove the bearing cap. Determine the amount of clearance by measuring the width of the compressed Plastigage with the scale on the Plastigage envelope (Fig. 5). Refer to Engine Specifications for the proper clearance.

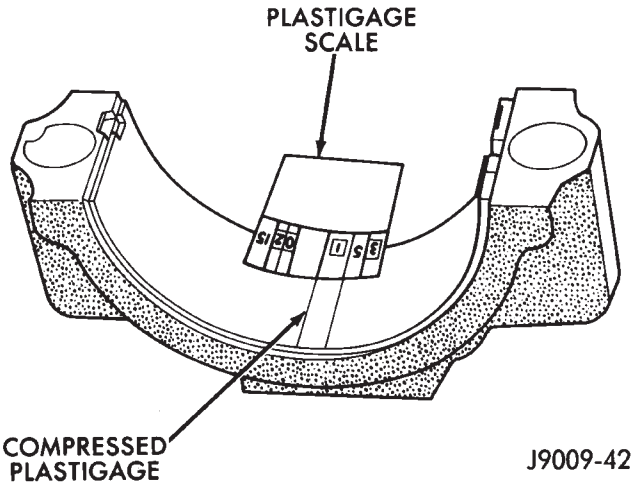

Fig. 5 Measuring Bearing Clearance with Plastigage

Plastigage should indicate the same clearance across the entire width of the insert. If clearance varies, it may indicate a tapered journal or foreign material trapped behind the insert.

If the specified clearance is indicated and there are no abnormal wear patterns, replacement of the bearing inserts is not necessary. Remove the Plastigage from the crankshaft journal and bearing insert. Proceed to Crankshaft Main Bearing—Installation.

If the clearance exceeds specification, install a pair of 0.025 mm (0.001 inch) undersize bearing inserts and measure the clearance as described in the previous steps.

The clearance indicatewith the 0.025 mm (0.001 inch) undersize insert pair installed will determine if this insert size or some other combination will provide the specified clearany.

FOR EXAMPLE: If the clearance was 0q762 mm (0.003 inch) originally, a pair of 0.0254 mm (0.001 inch) undersize inserts would reduce the clearance by 0.0254 mm (0.001 inch). The clearance would then be 0.0508 mm (0.002 inch) and within the specification. A 0.051 mm (0.002 inch) undersize bearing insert and a 0.0254 mm (0.001 inch) undersize insert would reduce the original clearance an additional 0.0127 mm (0.0005 inch). The clearance would then be 0.0381 mm (0.0015 inch).

CAUTION: Never use a pair of inserts that differ more than one bearing size as a pair.

FOR EXAMPLE: DO NOT use a standard size upper insert and a 0.051 mm (0.002 inch) undersize lower insert.

If the clearance exceeds specification using a pair of 0.051 mm (0.002 inch) undersize bearing inserts, measure crankshaft journal diameter with a micrometer. If the journal diameter is correct, the crankshaft bore in the cylinder block may be misaligned, which requires cylinder block replacement or machining to true bore.

Replace the crankshaft or grind to accept the appropriate undersize bearing inserts if:

- Journal diameters 1 through 6 are less than 63.4517 mm (2.4981 inches)
- Journal 7 diameter is less than 63.4365 mm (2.4975 inches).

Once the proper clearances have been obtained, proceed to Crankshaft Main Bearing—Installation.

MAIN BEARING JOURNAL DIAMETER (CRANKSHAFT REMOVED)

Remove the crankshaft from the cylinder block (refer to Cylinder Block - Disassemble).

Clean the oil off the main bearing journal.

Determine the maximum diameter of the journal with a micrometer. Measure at two locations 90° apart at each end of the journal.

The maximum allowable taper and out of round is 0.013 mm (0.0005 inch). Compare the measured diameter with the journal diameter specification (Main Bearing Fitting Chart). Select inserts required to obtain the specified bearing-to-journal clearance.

Install the crankshaft into the cylinder block (refer to Cylinder Block - Assemble and Crankshaft Main Bearings - Installation).

INSTALLATION

(1) Lubricate the bearing surface of each insert with engine oil.

(2) Loosen all the main bearing caps. Install the main bearing upper inserts.

(3) Install the lower bearing inserts into the main bearing caps.

(4) Install the main bearing cap(s) and lower insert(s).

(5) Tighten the bolts of caps 1, 2, 4, 5, 6, and 7 to 54 N·m (40 ft. lbs.) torque. Now tighten these bolts to 95 N·m (70 ft. lbs.) torque. Finally, tighten these bolts to 108 N·m (80 ft. lbs.) torque.

(6) Push the crankshaft forward and backward. Load the crankshaft front or rear and tighten cap bolt No.3 to 54 N·m (40 ft. lbs.) torque. Then tighten to 95 N·m (70 ft. lbs.) torque and finally tighten to 108 N·m (80 ft. lbs.) torque.

(7) Rotate the crankshaft after tightening each main bearing cap to ensure the crankshaft rotates freely.

(8) Check crankshaft end play. Crankshaft end play is controlled by the thrust bearing which is flange and installed at the No.2 main bearing position.

(a) Attach a magnetic base dial indicator to the cylinder block at either the front or rear of the engine.

(b) Position the dial indicator rod so that it is parallel to the center line of the crankshaft.

(c) Pry the crankshaft forward, position the dial indicator to zero.

(d) Pry the crankshaft forward and backward. Note the dial indicator readings. End play is the difference between the high and low measurements (Fig. 6). Correct end play is 0.038-0.165 mm (0.0015-0.0065 inch). The desired specifications are 0.051-0.064 mm (0.002-0.0025 inch).

(e) If end play is not within specification, inspect crankshaft thrust faces for wear. If no wear is apparent, replace the thrust bearing and measure end play. If end play is still not within specification, replace the crankshaft.

If the crankshaft was removed, install the crankshaft into the cylinder block (refer to Cylinder Block - Assemble).

(9) Install the oil pan.

(10) Install the drain plug. Tighten the plug to 34 N·m (25 ft. lbs.) torque.

(11) Lower the vehicle.

(12) Install the spark plugs. Tighten the plugs to 37 N·m (27 ft. lbs.) torque.

(13) Fill the oil pan with engine oil to the full mark on the dipstick level.

(14) Connect negative cable to battery.

REAR MAIN OIL SEALS

The crankshaft rear main bearing oil seal consists of two half pieces of viton with a single lip that effectively seals the rear of the crankshaft. Replace the upper and lower seal halves as a unit to ensure leak-free operation.

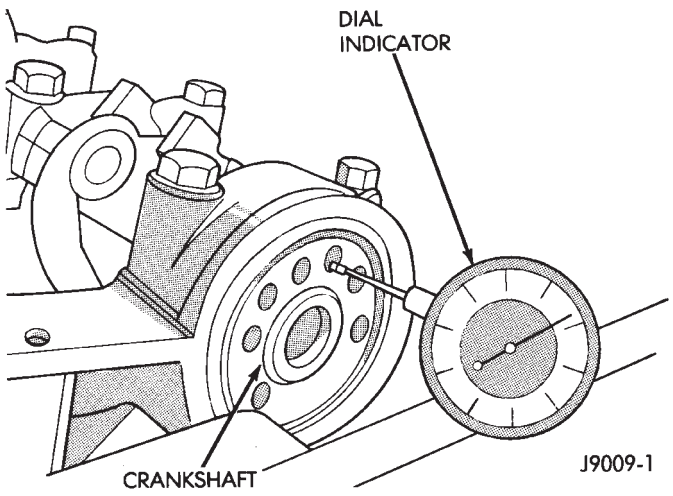

Fig. 6 Crankshaft End Play Measurement

MAIN BEARING FITTING CHART

Crankshaft Journals #1 - #6		Corresponding Crankshaft Bearing Insert	
Color Code	Diameter	Upper Insert Size	Lower Insert Size
Yellow	63.5025-63.4898 mm (2.5001-2.4996 in.)	Yellow - Standard	Yellow - Standard
Orange	63.4898-63.4771 mm (2.4996-2.4991 in.) 0.0127 mm (0.0005 in.) Undersize	Blue - Undersize 0.025 mm (0.001 in.)	Yellow - Standard
Blue	63.4771-63.4644 mm (2.4991-2.4986 in.) 0.0254 mm (0.001 in.) Undersize	Blue - Undersize 0.025 mm (0.001 in.)	Blue - Undersize 0.025 mm (0.001 in.)
Green	63.4644-63.4517 mm (2.4986-2.4981 in.) 0.0381 mm (0.0015 in.) Undersize	Blue - Undersize 0.025 mm (0.001 in.)	Green - Undersize 0.051 mm (0.002 in.)
Red	63.2485-63.2358 mm (2.4901-2.4896 in.) 0.254 mm (0.010 in.) Undersize	Red - Undersize 0.254 mm (0.010 in.)	Red - Undersize 0.254 mm (0.010 in.)

Crankshaft Journals #7 Only		Corresponding Crankshaft Bearing Insert	
Color Code	Diameter	Upper Insert Size	Lower Insert Size
Yellow	63.4873-63.4746 mm (2.4995-2.4990 in.)	Yellow - Standard	Yellow - Standard
Orange	63.4746-63.4619 mm (2.4990-2.4985 in.) 0.0127 mm (0.0005 in.) Undersize	Blue - Undersize 0.025 mm (0.001 in.)	Yellow - Standard
Blue	63.4619-63.4492 mm (2.4985-2.4980 in.) 0.0254 mm (0.001 in.) Undersize	Blue - Undersize 0.025 mm (0.001 in.)	Blue - Undersize 0.025 mm (0.001 in.)
Green	63.4492-63.4365 mm (2.4980-2.4975 in.) 0.0381 mm (0.0015 in.) Undersize	Blue - Undersize 0.025 mm (0.001 in.)	Green - Undersize 0.051 mm (0.002 in.)
Red	63.2333-63.2206 mm (2.4895-2.4890 in.) 0.254 mm (0.010 in.) Undersize	Red - Undersize 0.254 mm (0.010 in.)	Red - Undersize 0.254 mm (0.010 in.)

J9409-29

REMOVAL

(1) Remove the engine flywheel or converter drive plate.

(2) Remove the oil pan.

(3) Remove the rear main bearing cap (No.7).

(4) Push the upper seal out of the groove. Ensure that the crankshaft and seal groove are not damaged.

(5) Remove the lower half of the seal from the bearing cap.

INSTALLATION

(1) Wipe the seal surface area of the crankshaft until it is clean.

(2) Apply a thin coat of engine oil.

(3) Coat the lip of the seal with engine oil.

(4) Carefully position the upper seal into the groove in the cylinder block. The lip of the seal faces toward the front of the engine.

(5) Place the lower half of the seal into bearing cap No.7 (Fig. 7).

(6) Coat the outer curved surface of the lower seal with soap and the lip of the seal with engine oil (Fig. 7).

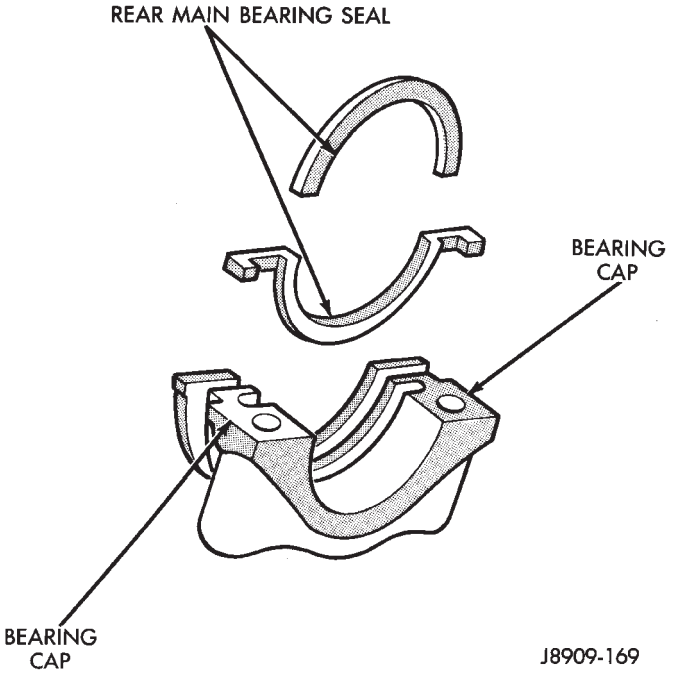

Fig. 7 Rear Main Bearing Oil Seal

(7) Position the lower seal into the bearing cap recess and seat it firmly. Be sure the seal is flush with the cylinder block pan rail.

(8) Apply Loctite 518, or equivalent on the rear bearing cap (Fig. 8). The bead should be 3 mm (0.125 in) thick. DO NOT apply Loctite 518, or equivalent to the lip of the seal.

(9) Install the rear main bearing cap. DO NOT strike the cap more than twice for proper engagement.

(10) Tighten all main bearing bolts to 108 N·m (80 ft. lbs.) torque.

(11) Install the oil pan gasket and oil pan.

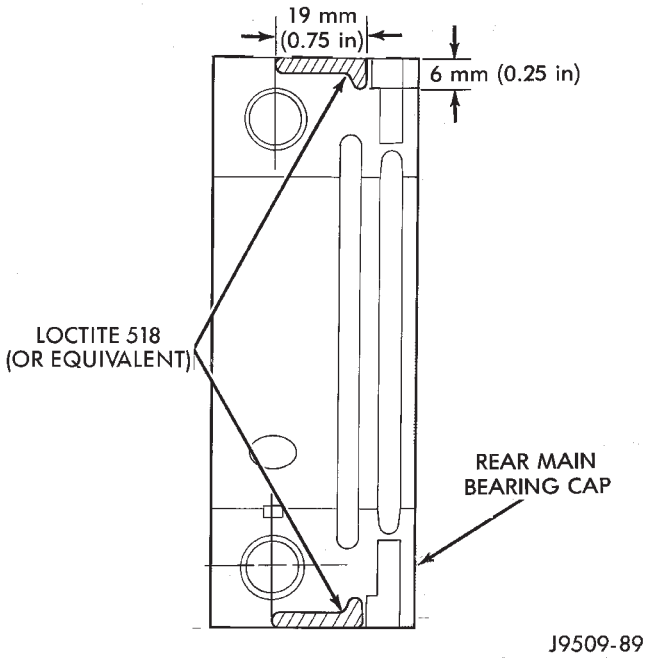

Fig. 8 Location of Loctite 518 (or equivalent)

(12) Install the engine flywheel or converter drive plate.

CYLINDER BLOCK

Remove the Engine Assembly from the vehicle.

DISASSEMBLY

Refer to the applicable sections for detailed instructions.

(1) Drain the engine oil. Remove and discard the oil filter.

(2) Remove the water pump from the cylinder block.

(3) Remove the vibration damper.

(4) Remove the timing case cover and lay the cover upside down.

(5) Position a drift punch into the slot in the back of the cover and tap the old seal out.

(6) Remove the oil slinger from crankshaft.

(7) Remove the camshaft retaining bolt and remove the sprockets and chain as an assembly.

(8) Remove the camshaft.

(9) Remove the oil pan and gasket.

(10) Remove the front and rear oil galley plugs.

(11) Remove the oil pump.

(12) Remove the connecting rods and the pistons. Remove the connecting rod and piston assemblies through the top of the cylinder bores.

(13) Remove the crankshaft.

CLEANING

Thoroughly clean the oil pan and engine block gasket surfaces.

Use compressed air to clean out:

- The galley at the oil filter adaptor hole, the filter bypass hole.

- The front and rear oil galley holes.
- The feed holes for the crankshaft main bearings.

Once the block has been completely cleaned, apply Loctite PST pipe sealant with Teflon 592 to the threads of the front and rear oil galley plugs. Tighten the plugs to 41 N·m (30 ft. lbs.) torque.

INSPECTION—CYLINDER BORE

(1) It is mandatory to use a dial bore gauge to measure each cylinder bore diameter (Fig. 12). To correctly select the proper size piston, a cylinder bore gauge, Special Tool 6879, capable of reading in .0001″ INCREMENTS is required. If a bore gauge is not available, do not use an inside micrometer.

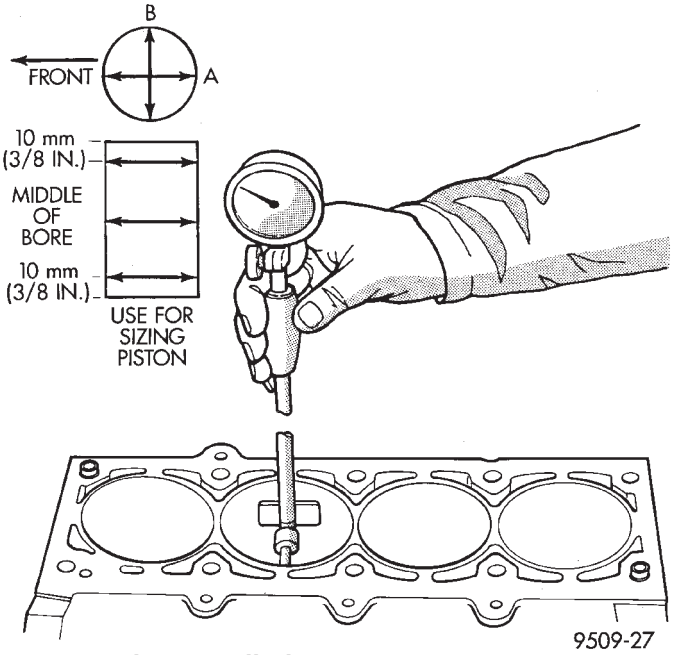

Fig. 12 Cylinder Bore Measurement

(2) Measure the inside diameter of the cylinder bore at three levels below top of bore. Start perpendicular (across or at 90 degrees) to the axis of the crankshaft and then take two additional readings.

(3) Measure the cylinder bore diameter crosswise to the cylinder block near the top of the bore. Repeat the measurement near the middle of the bore, then repeat the measurement near the bottom of the bore.

(4) Determine taper by subtracting the smaller diameter from the larger diameter.

(5) Rotate measuring device 90° and repeat steps above.

(6) Determine out-of-roundness by comparing the difference between each measurement.

(7) If cylinder bore taper does not exceed 0.025 mm (0.001 inch) and out-of-roundness does not exceed 0.025 mm (0.001 inch), the cylinder bore can be honed. If the cylinder bore taper or out-of-round condition exceeds these maximum limits, the cylinder must be bored and then honed to accept an oversize piston. A slight amount of taper always exists in the cylinder bore after the engine has been in use for a period of time.

HONING—CYLINDER BORE

The honing operation should be closely coordinated with the fitting of pistons and rings. This will ensure specified clearances are maintained.

Refer to Standard Service Procedures in the beginning of this Group for the proper honing of cylinder bores.

ASSEMBLY

Refer to the applicable sections for detailed instructions.

(1) Install the crankshaft.

(2) Install the connecting rods and the pistons through the top of the cylinder bores.

(3) Install the oil pump.

(4) Install the oil pan and gasket.

(5) Install the camshaft.

(6) Install the sprockets and chain as an assembly.

(7) Install the oil slinger from the crankshaft.

(8) Install the timing case cover seal.

(9) Install the timing case cover.

(10) Install the vibration damper.

(11) Install the water pump. Tighten the mounting bolts to 31 N·m (270 in. lbs.) torque.

(12) Lubricate the oil filter seal with clean engine oil. Tighten oil filter to 18 N·m (13 ft. lbs.) torque.

(13) Install the engine into the vehicle.

(14) Fill the engine with clean lubrication oil (refer to Group 0, Lubrication and Maintenance).

(15) Fill the cooling system (refer to Group 7, Cooling System for the proper procedures).

ENGINE SPECIFICATIONS

Camshaft

Hydraulic Tappet Clearance	Zero Lash
Bearing Clearance	0.025 - 0.076 mm (0.001 - 0.003 in)
Bearing Journal Diameter	
No.1	51.54 - 51.56 mm (2.029 - 2.030 in)
No.2	51.28 - 51.31 mm (2.019 - 2.020 in)
No.3	51.03 - 51.05 mm (2.009 - 2.010 in)
No.4	50.78 - 50.80 mm (1.999 - 2.000 in)
Base Circle Runout	0.03 mm - max. (0.001 in - max.)
Camshaft Lobe Lift	6.43 mm (0.253 in)
Valve Lift	10.29 mm (0.405 in)
Intake Valve Timing	
Opens	15°BTDC
Closes	75°ABDC
Exhaust Valve Timing	
Opens	59°BBDC
Closes	31°ATDC
Valve Overlap	46°
Intake Duration	270°
Exhaust Duration	270°

Crankshaft

End Play	0.038 - 0.165 mm (0.0015 - 0.0065 in)
Main Bearing Journal Diameter	
No.1-6	63.489 - 63.502 mm (2.4996 - 2.5001 in)
No.7	63.449 - 63.487 mm (2.4980 - 2.4995 in)
Main Bearing Journal Width	
No.1	27.58 - 27.89 mm (1.086 - 1.098 in)
No.3	32.28 - 32.33 mm (1.271 - 1.273 in)
No.2-4-5-6-7	30.02 - 30.18 mm (1.182 - 1.188 in)
Main Bearing Clearance	0.03 - 0.06 mm (0.001 - 0.0025 in)
Preferred	0.051 mm (0.002 in)
Connecting Rod Journal Dia.	53.17 - 53.23 mm (2.0934 - 2.0955 in)
Connecting Rod Journal Width	27.18 - 27.33 mm (1.070 - 1.076 in)
Out-of-Round (Max. All Journals)	0.013 mm (0.0005 in)
Taper (Max. - All Journals)	0.013 mm (0.0005 in)

Cylinder Block

Deck Height	240.03 - 240.18 mm (9.450 - 9.456 in)
Deck Clearance (Below Block)	0.546 mm (0.0215 in)
Cylinder Bore Diameter	
Standard	98.45 - 98.48 mm (3.8759 - 3.8775 in)
Taper (Max.)	0.025 mm (0.001 in)
Out-of-Round	0.025 mm (0.001 in)
Tappet Bore Diameter	23.000 - 23.025 mm (0.9055 - 0.9065 in)
Flatness	0.03 mm per 25 mm (0.001 in per 1 in) 0.05 mm per 152 mm (0.002 in per 6 in) 0.20 mm - max. for total length (0.008 in - max. for total length)
Main Bearing Bore Dia.	68.3514 - 68.3768 mm (2.691 - 2.692 in)

Connecting Rods

Total Weight (Less Bearing)	657 - 665 grams (23.17 - 23.45 oz)
Length (Center-to-Center)	155.52 - 155.62 mm (6.123 - 6.127 in)
Piston Pin Bore Diameter	23.59 - 23.62 mm (0.9288 - 0.9298 in)
Bore (Less Bearings)	56.08 - 56.09 mm (2.2080 - 2.2085 in)
Bearing Clearance	0.025 - 0.076 mm (0.001 - 0.003 in)
Preferred	0.044 - 0.050 mm (0.0015 - 0.0020 in)
Side Clearance	0.25 - 0.48 mm (0.010 - 0.019 in)
Twist (Max.)	0.001 mm per mm (0.001 in per in)
Bend (Max.)	0.0005 mm per mm (0.0005 in per in)

Cylinder Compression Pressure

Ratio	8.7:1
Pressure Range	827 - 1 034 kPa (120 - 150 psi)
Max. Variation Between Cylinders	206 kPa (30 psi)

J9409-23

ENGINE SPECIFICATIONS (CONT.)

Cylinder Head

Combustion Chamber	55.22 - 58.22 cc (3.37 - 3.55 cu. in.)
Valve Guide I.D. (Integral)	7.9 mm (0.312 in)
Valve Stem-to-Guide Clearance	0.025 - 0.076 mm (0.001 - 0.003 in)
Intake Valve Seat Angle	44.5°
Exhaust Valve Seat Angle	44.5°
Valve Seat Width	1.02 - 1.52 mm (0.040 - 0.060 in)
Valve Seat Runout	0.064 mm (0.0025 in)
Flatness	0.03 mm per 25 mm (0.001 in per 1 in) 0.05 mm per 152 mm (0.002 in per 6 in) 0.20 mm - max. for total length (0.008 in - max. for total length)

Rocker Arms, Push Rods & Tappets

Rocker Arm Ratio	1.6:1
Push Rod Length	244.856 - 245.364 mm (9.640 - 9.660 in)
Push Rod Diameter	7.92 - 8.00 mm (0.312 - 0.315 in)
Hydraulic Tappet Diameter	22.962 - 22.974 mm (0.904 - 0.9045 in)
Tappet-to-Bore Clearance	0.025 - 0.063 mm (0.001 - 0.0025 in)

Valves

Length (Tip-to-Gauge Dimension Line)	
Intake	122.479 - 122.860 mm (4.822 - 4.837 in)
Exhaust	122.860 - 123.241 mm (4.837 - 4.852 in)
Valve Stem Diameter	7.899 - 7.925 mm (0.311 - 0.312 in)
Stem-to-Guide Clearance	0.025 - 0.076 mm (0.001 - 0.003 in)
Valve Head Diameter	
Intake	48.387 - 48.641 mm (1.905 - 1.915 in)
Exhaust	37.973 - 38.227 mm (1.495 - 1.505 in)
Valve Face Angle	
Intake	45°
Exhaust	45°
Tip Refinishing (Max. Allowable)	0.25 mm (0.010 in)

Valve Springs

Free Length (Approx.)	49.962 mm (1.967 in)
Spring Tension	
Valve Closed	360 - 396 N @ 41.656 mm (81 - 89 lbf @ 1.640 in)
Valve Open	845 - 934 N @ 30.886 mm (190 - 210 lbf @ 1.216 in)
Inside Diameter	24.08 - 24.59 mm (0.948 - 0.968 in)

Pistons

Weight (Less Pin)	563 - 567 grams (19.86 - 20.00 oz)
Piston Pin Bore (Centerline-to-Piston Top)	40.61 - 40.72 mm 1.599 - 1.603 in)
Piston-to-Bore Clearance	0.033 - 0.053 mm (0.0013 - 0.0021 in)
Preferred	0.033 - 0.038 mm (0.0013 - 0.0015 in)
Piston Ring Gap Clearance	
Compression Rings	0.25 - 0.51 mm (0.010 - 0.020 in)
Oil Control Steel Rails	0.25 - 0.64 mm (0.010 - 0.025 in)
Piston Ring Side Clearance	
Compression Rings	0.025 - 0.081 mm (0.001 - 0.0032 in)
Preferred	0.025 mm (0.001 in)
Oil Control Ring	0.025 - 0.241 mm (0.001 - 0.0095 in)
Preferred	0.08 mm (0.003 in)
Piston Ring Groove Height	
Compression Rings	2.019 - 2.045 mm (0.0795 - 0.0805 in)
Oil Control Ring	4.78 - 4.80 mm (0.1880 - 0.1895 in)
Piston Ring Groove Diameter	
Compression Rings	88.30 - 88.55 mm (3.476 - 3.486 in)
Oil Control Ring	90.35 - 90.60 mm (3.557 - 3.566 in)
Piston Pin Bore Diameter	23.647 - 23.655 mm (0.9310 - 0.9313 in)
Piston Pin Diameter	23.637 - 23.640 mm (0.9306 - 0.9307 in)
Piston-to-Pin Clearance	0.0076 - 0.0178 mm - Loose (0.0003 - 0.0007 in - Loose)
Preferred	0.013 mm (0.0005 in)
Piston-to-Pin Connecting Rod (Press Fit)	8.9 kN (2000 lb f)

ENGINE SPECIFICATIONS (CONT.)

Oil Pump

Gear-to-Body Clearance (Radial) .....0.051 - 0.102 mm (0.002 - 0.004 in)
Preferred.....0.051 mm (0.002 in)
Gear End Clearance
Plastigage.....0.051 - 0.152 mm (0.002 - 0.006 in)
Preferred.....0.051 mm (0.002 in)
Feeler Gauge.....0.1016 - 0.2032 mm (0.004 - 0.008 in)
Preferred.....0.1778 mm (0.007 in)

Oil Pressure

At Idle Speed (600 rpm) .....89.6 kPa (13 psi)
At 1600 rpm & higher. .....255 - 517 kPa (37 - 75 psi)
Oil Pressure Relief. .....517 kPa (75 psi)

J9409-33

TORQUE SPECIFICATIONS

Description	Torque
A/C Compressor Bracket-to-Engine Bolts	34 N•m (25 ft. lbs.)
A/C Compressor Mounting Bolts	27 N•m (20 ft. lbs.)
A/C Low Pressure Service Valve Nut	38 N•m (28 ft. lbs.)
Block Heater Nut	1.8 N•m (16 in. lbs.)
Camshaft Sprocket Bolt	108 N•m (80 ft. lbs.)
Connecting Rod Nuts	45 N•m (33 ft. lbs.)
Cylinder Block Drain Plugs	41 N•m (30 ft. lbs.)
Cylinder Head Bolts	
(#1–10 & #12–14)	149 N•m (110 ft. lbs.)
(#11)	135 N•m (100 ft. lbs.)
Cylinder Head Cover Bolts	13 N•m (115 in. lbs.)
Engine Mounts—Front	
Engine Support Bracket	
Bolts (XJ)	61 N•m (45 ft. lbs.)
Bolts (YJ)	62 N•m (46 ft. lbs.)
Support Cushion	
Bolts/Nuts (XJ)	41 N•m (30 ft. lbs.)
Bolts/Nuts (YJ)	52 N•m (38 ft. lbs.)
Support Cushion Bracket—(XJ)	
Bolts	54 N•m (40 ft. lbs.)
Stud Nuts	41 N•m (30 ft. lbs.)
Support Cushion Thru-Bolt	
XJ Vehicles	65 N•m (48 ft. lbs.)
YJ Vehicles	69 N•m (51 ft. lbs.)
Engine Mount—Rear	
Crossmember-to-Sill Bolts (XJ-Automatic)	41 N•m (30 ft. lbs.)
Insulator Stud Assembly Nut	41 N•m (30 ft. lbs.)
Skid Plate/Support Cushion Stud Nuts (YJ)	54 N•m (40 ft. lbs.)
Skid Plate-to-Sill Bolts (YJ)	88 N•m (65 ft. lbs.)
Support Cushion/Crossmember Nuts (XJ)	22 N•m (192 in. lbs.)
Support Cushion/Support Bracket Nuts (XJ Manual)	75 N•m (55 ft. lbs.)
Support Cushion/Torque Arm Bracket Nuts (YJ)	54 N•m (40 ft. lbs.)
Torque Arm Bracket Bolts (YJ-Automatic)	54 N•m (40 ft. lbs.)
Engine Mount—Rear (Cont.)	
Torque Arm Bracket/Support Cushion Bolts (YJ-Manual)	54 N•m (40 ft. lbs.)
Transmission Support Adaptor Bracket Bolts (XJ 2WD Auto)	75 N•m (55 ft. lbs.)
Transmission Support Bracket Bolts (XJ-Manual)	46 N•m (34 ft. lbs.)
Transmission Support Bracket/Support Cushion Bolts (XJ Automatic)	75 N•m (55 ft. lbs.)
Exhaust Manifold/Pipe Nuts	27 N•m (20 ft. lbs.)
Flywheel/Converter Housing Bolts	38 N•m (28 ft. lbs.)
Flywheel/Crankshaft Bolts	143 N•m (105 ft. lbs.)
Front Cover-to-Block Bolts (1/4-20)	7 N•m (60 in. lbs.)
Front Cover-to-Block Bolts (5/16-18)	22 N•m (192 in. lbs.)
Fuel Pump Bolts	22 N•m (16 ft. lbs.)
Generator Adjusting Bolt	24 N•m (18 ft. lbs.)
Generator Pivot Bolt/Nut	38 N•m (28 ft. lbs.)
Main Bearing Bolts	108 N•m (80 ft. lbs.)
Oil Filter	18 N•m (13 ft. lbs.)
Oil Filter Adaptor Bolts	102 N•m (75 ft. lbs.)
Oil Galley Plug	41 N•m (30 ft. lbs.)
Oil Pan Bolts (1/4-20)	14 N•m (120 in. lbs.)
(5/16-18)	18 N•m (156 in. lbs.)
Oil Pan Drain Plug	34 N•m (25 ft. lbs.)
Oil Pump Attaching Bolts	
Short Bolts	14 N•m (10 ft. lbs.)
Long Bolts	23 N•m (17 ft. lbs.)
Oil Pump Cover Bolts	8 N•m (70 in. lbs.)
Power Steering Pump Pressure Hose Nut	52 N•m (38 ft. lbs.)
Rocker Arm Assembly-to-Cylinder Head Capscrews	28 N•m (21 ft. lbs.)
Spark Plugs	37 N•m (27 ft. lbs.)
Starting Motor Mounting Bolts	45 N•m (33 ft. lbs.)
Thermostat Housing	18 N•m (156 in. lbs.)
Vibration Damper Bolts	108 N•m (80 ft. lbs.)
Water Pump/Block Bolts	31 N•m (270 in. lbs.)

J9509-82

EXHAUST SYSTEM AND INTAKE MANIFOLD

CONTENTS

	page		page
EXHAUST SYSTEM	1	SERVICE PROCEDURES	3
EXHAUST SYSTEM DIAGNOSIS	2	TORQUE SPECIFICATIONS	10

EXHAUST SYSTEM

GENERAL INFORMATION

The basic exhaust system consists of an engine exhaust manifold, exhaust pipe with oxygen sensor, catalytic converter, exhaust heat shield(s), muffler and exhaust tailpipe (Fig. 1).

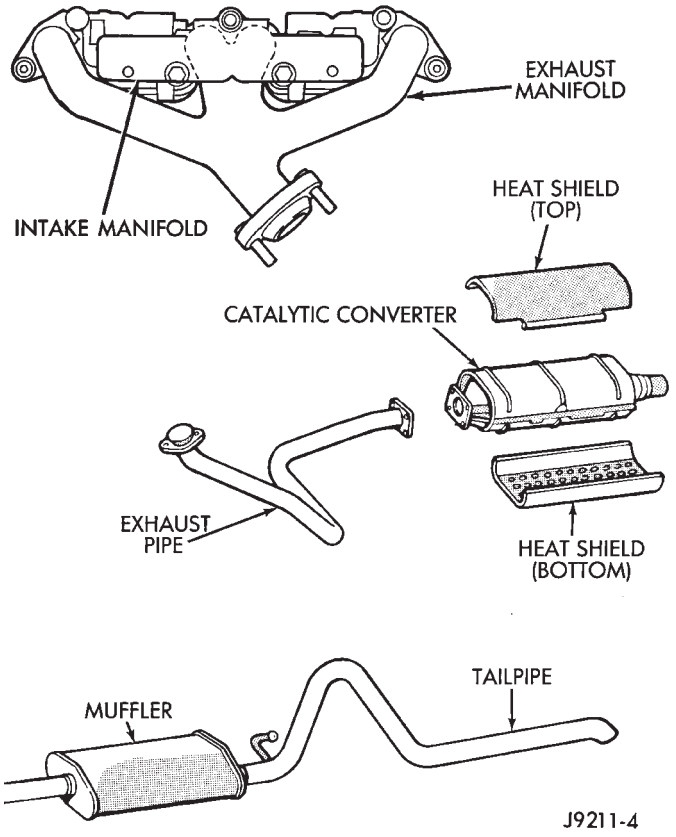

Fig. 1 Typical Exhaust System

The exhaust system uses a single muffler with a single monolithic-type catalytic converter.

The 4.0L engines use a seal between the engine exhaust manifold and exhaust pipe to assure a tight seal and strain free connections.

The exhaust system must be properly aligned to prevent stress, leakage and body contact. If the system contacts any body panel, it may amplify objectionable noises originating from the engine or body.

When inspecting an exhaust system, critically inspect for cracked or loose joints, stripped screw or bolt threads, corrosion damage and worn, cracked or broken hangers. Replace all components that are badly corroded or damaged. DO NOT attempt to repair.

When replacement is required, use original equipment parts (or their equivalent). This will assure proper alignment and provide acceptable exhaust noise levels.

CAUTION: Avoid application of rust prevention compounds or undercoating materials to exhaust system floor pan exhaust heat shields. Light overspray near the edges is permitted. Application of coating will result in excessive floor pan temperatures and objectionable fumes.

CATALYTIC CONVERTER

The stainless steel catalytic converter body is designed to last the life of the vehicle. Excessive heat can result in bulging or other distortion, but excessive heat will not be the fault of the converter. If unburned fuel enters the converter, overheating may occur. If a converter is heat-damaged, correct the cause of the damage at the same time the converter is replaced. Also, inspect all other components of the exhaust system for heat damage.

Unleaded gasoline must be used to avoid contaminating the catalyst core.

EXHAUST HEAT SHIELDS

Exhaust heat shields are needed to protect both the vehicle and the environment from the high temperatures developed by the catalytic converter. The catalytic converter releases additional heat into the exhaust system. Under severe operating conditions, the temperature increases in the area of the con-

verter. Such conditions can exist when the engine misfires or otherwise does not operate at peak efficiency.

DO NOT remove spark plug wires from plugs or by any other means short out cylinders. Failure of the catalytic converter can occur due to a temperature increase caused by unburned fuel passing through the converter.

DO NOT allow the engine to operate at fast idle for extended periods (over 5 minutes). This condition may result in excessive temperatures in the exhaust system and on the floor pan.

EXHAUST SYSTEM DIAGNOSIS

CONDITION	POSSIBLE CAUSE	CORRECTION
EXCESSIVE EXHAUST NOISE	1. Leaks at pipe joints.	1. Tighten clamps at leaking joints.
	2. Burned or blown-out muffler.	2. Replace muffler assembly. Check exhaust system.
	3. Burned or rusted-out exhaust pipe.	3. Replace exhaust pipe.
	4. Exhaust pipe leaking at manifold flange.	4. Tighten connection attaching nuts.
	5. Exhaust manifold cracked or broken.	5. Replace exhaust manifold.
	6. Leak between exhaust manifold and cylinder head.	6. Tighten exhaust manifold to cylinder head stud nuts or bolts.
	7. Restriction in muffler or tail pipe.	7. Remove restriction, if possible. Replace muffler or tail pipe, as necessary.
LEAKING EXHAUST GASES	1. Leaks at pipe joints.	1. Tighten clamps at leaking joints.
	2. Damaged or improperly installed gaskets.	2. Replace gaskets, as necessary.
ENGINE HARD TO WARM UP OR WILL NOT RETURN TO NORMAL IDLE	1. Blocked crossover passage in intake manifold.	1. Remove restriction or replace intake manifold.
	2. Thermostat broken.	2. Replace thermostat.

J9311-13

SERVICE PROCEDURES

INDEX

	page
Catalytic Converter	4
Engine Exhaust Manifold—2.5L Engine	7
Engine Exhaust Manifold—4.0L Engine	7
Exhaust Pipe—XJ Vehicles	3
Exhaust Pipe—YJ Vehicles	4
Intake Manifold—2.5L Engine	7
Intake Manifold—4.0L Engine	8
Muffler and Exhaust Tailpipe—XJ Vehicles	5
Muffler and Exhaust Tailpipe—YJ Vehicles	6

EXHAUST PIPE—XJ VEHICLES

WARNING: IF TORCHES ARE USED WHEN WORKING ON THE EXHAUST SYSTEM, DO NOT ALLOW THE FLAME NEAR THE FUEL LINES.

REMOVAL

(1) Raise and support the vehicle.

(2) Saturate the bolts and nuts with heat valve lubricant (Fig. 1). Allow 5 minutes for penetration.

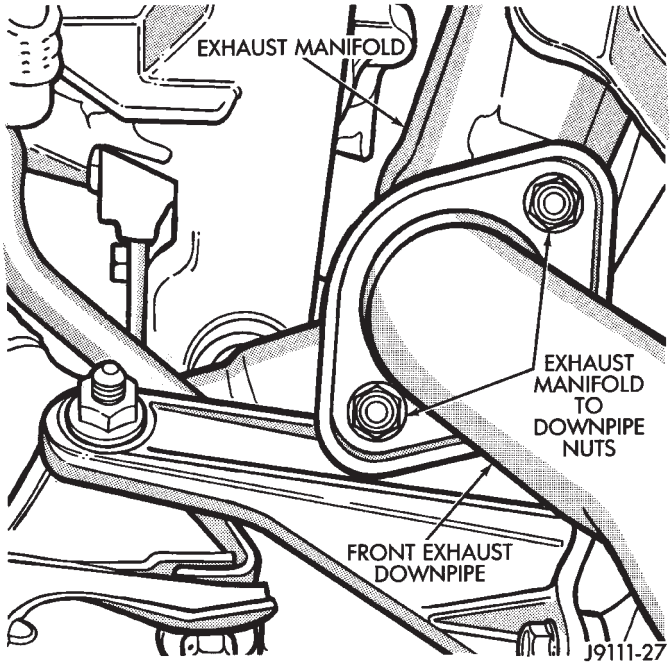

Fig. 1 Exhaust Pipe-to-Engine Exhaust Manifold Nuts

(3) Remove the oxygen sensor from the exhaust pipe (Fig. 2).

(4) Disconnect the exhaust pipe from the engine exhaust manifold. Discard the seal (4.0L engine, only).

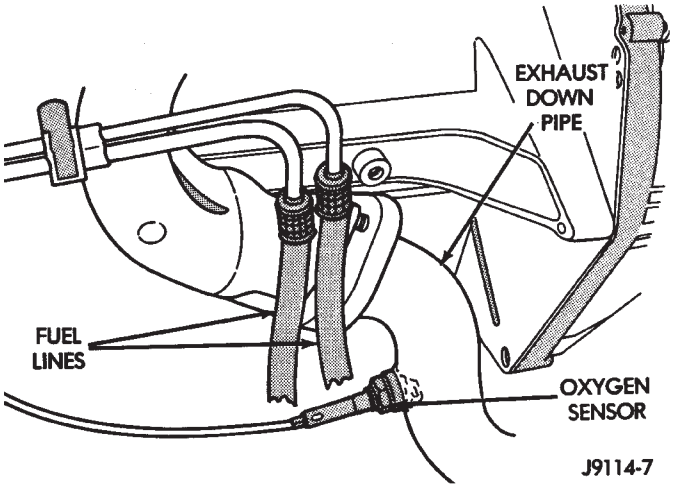

Fig. 2 Oxygen Sensor

(5) Support the transmission and remove the rear crossmember.

(6) Remove the clamp nuts and clamp (Fig. 3). To remove the exhaust pipe from the catalytic converter, apply heat until the metal becomes cherry red. Disconnect the exhaust pipe from the catalytic converter (Fig. 3). Remove the exhaust pipe.

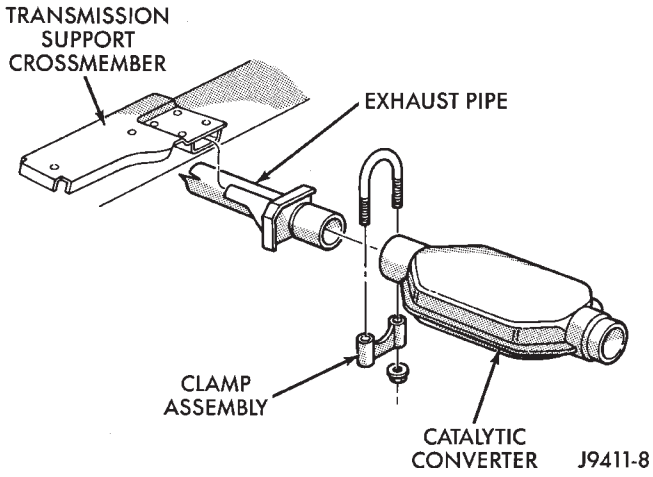

Fig. 3 Exhaust Pipe-to-Catalytic Converter Connection

INSTALLATION

(1) Assemble exhaust pipe to manifold and catalytic converter loosely to permit proper alignment of all parts.

(2) Use a new clamp and tighten the nuts to 61 N·m (45 ft. lbs.) torque.

(3) Connect the exhaust pipe to the engine exhaust manifold. Install a new seal between the exhaust manifold and the exhaust pipe (4.0L engine, only). Tighten the nuts to 31 N·m (23 ft. lbs.) torque (Fig. 1).

(3) Install the rear crossmember. Tighten the crossmember-to-sill bolts to 41 N·m (30 ft. lbs.) torque. Remove the support from the transmission.

(4) Coat the oxygen sensor with anti-seize compound. Install the sensor and tighten the nut to 48 N·m (35 ft. lbs.) torque.

(5) Lower the vehicle.

(6) Start the engine and inspect for exhaust leaks and exhaust system contact with the body panels. Adjust the alignment, if needed.

EXHAUST PIPE—YJ VEHICLES

WARNING: IF TORCHES ARE USED WHEN WORKING ON THE EXHAUST SYSTEM, DO NOT ALLOW THE FLAME NEAR THE FUEL LINES.

REMOVAL

(1) Raise and support the vehicle.

(2) Saturate the bolts and nuts with heat valve lubricant (Fig. 4). Allow 5 minutes for penetration.

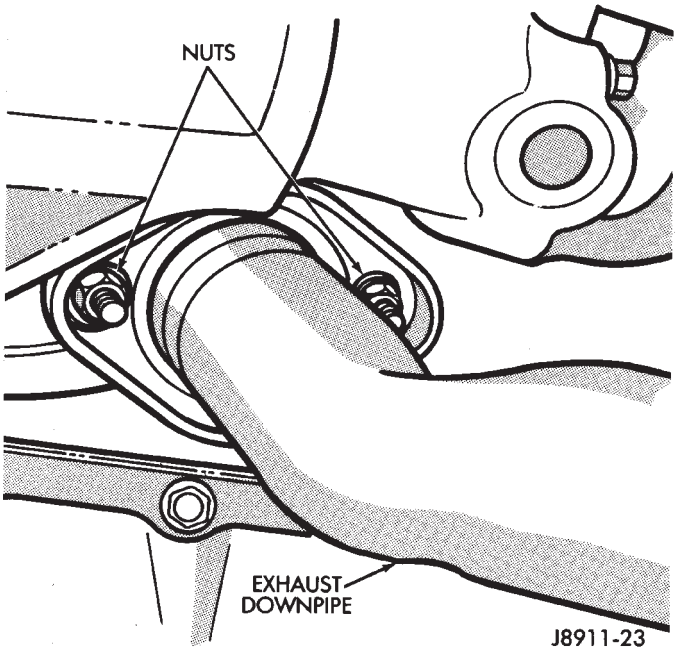

Fig. 4 Exhaust Pipe-to-Engine Exhaust Manifold Bolts and Nuts

(3) Remove the oxygen sensor from the exhaust pipe (Fig. 2).

(4) Disconnect the exhaust pipe from the engine exhaust manifold.

(5) Disconnect the exhaust pipe from the catalytic converter and slide the pipe out of the transmission torque arm insulator (Fig. 5). Remove the exhaust pipe.

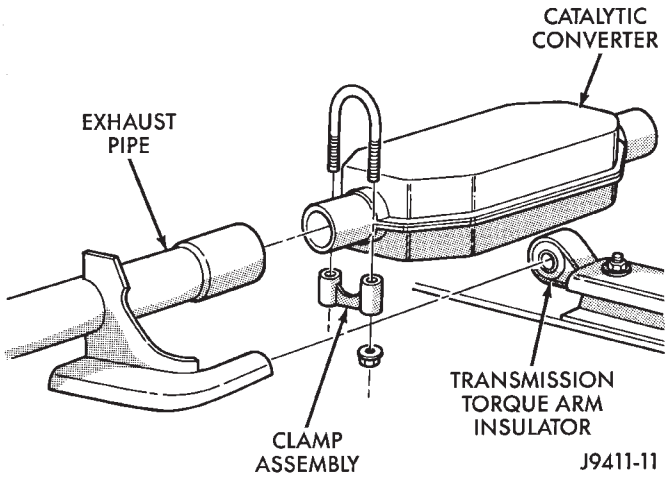

Fig. 5 Exhaust Pipe-to-Catalytic Converter Connection—YJ Vehicles

INSTALLATION

(1) Slide the exhaust pipe into the transmission torque arm insulator and onto the catalytic converter (Fig. 5).

(2) Clean the mating surface of the engine exhaust manifold flange.

(3) Connect the exhaust pipe to the engine exhaust manifold using new nuts. DO NOT tighten the nuts.

(4) Align the exhaust pipe.

(5) Use a new clamp at the exhaust pipe to catalytic converter connection and tighten the nuts to 61 N·m (45 ft. lbs.) torque.

(6) Tighten the exhaust pipe-to-engine exhaust manifold nuts to 31 N·m (23 ft. lbs.) torque.

(7) Coat the oxygen sensor with anti-seize compound. Install the sensor and tighten the nut to 48 N·m (35 ft. lbs.) torque.

(8) Lower the vehicle.

(9) Start the engine and inspect for exhaust leaks and exhaust system contact with the body panels. Adjust the alignment, if needed.

CATALYTIC CONVERTER

WARNING: IF TORCHES ARE USED WHEN WORKING ON THE EXHAUST SYSTEM, DO NOT ALLOW THE FLAME NEAR THE FUEL LINES.

REMOVAL

(1) Raise and support the vehicle.

(2) Remove the clamp from the catalytic converter and muffler connection (Fig. 6).

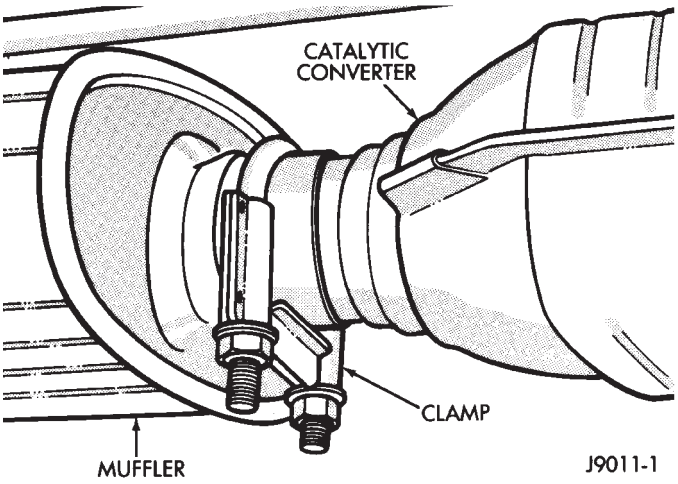

Fig. 6 Catalytic Converter-to-Muffler Connection

(3) Heat the catalytic converter and muffler connection with an oxyacetylene torch until the metal becomes cherry red.

(4) While the metal is still cherry red, twist the muffler assembly back and forth to separate it from the catalytic converter.

(5) Disconnect the exhaust pipe from the catalytic converter (Figs. 3 and 5). If needed, heat up the pipes to separate.

INSTALLATION

(1) Connect the catalytic converter to the exhaust pipe (Figs. 3 and 5). Use a new clamp and tighten the nuts to 61 N·m (45 ft. lbs.) torque.

(2) Install the muffler onto the catalytic converter until the alignment tab is inserted into the alignment slot.

(3) Install a new clamp at the muffler and catalytic converter connection (Fig. 6). Tighten the clamp nuts to 61 N·m (45 ft. lbs.) torque.

(4) Lower the vehicle.

(5) Start the engine and inspect for exhaust leaks and exhaust system contact with the body panels. Adjust the alignment, if needed.

MUFFLER AND EXHAUST TAILPIPE—XJ VEHICLES

All original equipment exhaust systems are manufactured with the exhaust tailpipe welded to the muffler. Service replacement mufflers and exhaust tailpipes are either clamped together or welded together.

WARNING: IF TORCHES ARE USED WHEN WORKING ON THE EXHAUST SYSTEM, DO NOT ALLOW THE FLAME NEAR THE FUEL LINES.

REMOVAL

(1) Raise and support the vehicle.

(2) Remove the front muffler clamp from the catalytic converter and muffler connection (Fig. 6).

(3) Remove the rear exhaust tailpipe hanger clamp (Fig. 7) and remove the exhaust tailpipe from the front exhaust tailpipe hanger (Fig. 8).

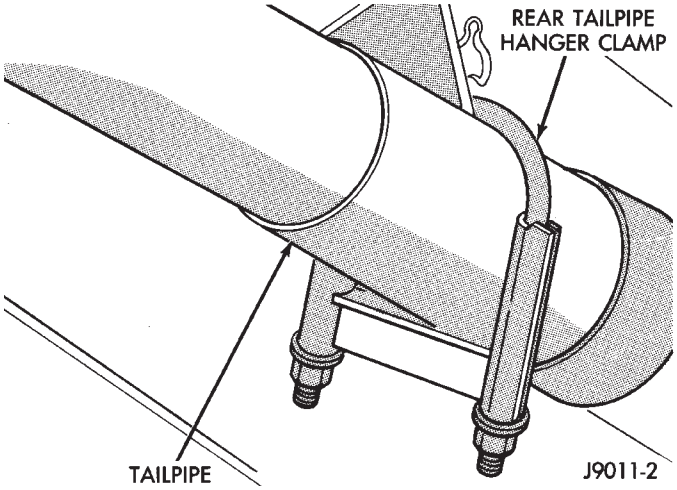

Fig. 7 Rear Exhaust Tailpipe Hanger Clamp

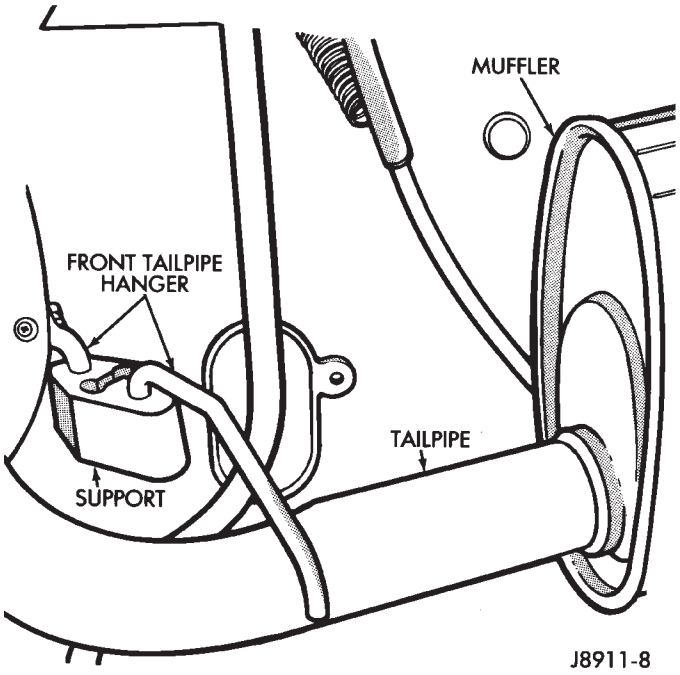

Fig. 8 Front Exhaust Tailpipe Hanger

(4) Heat the catalytic converter-to-muffler connection with an oxyacetylene torch until the metal becomes cherry red.

(5) While the metal is still cherry red, remove the exhaust tailpipe/muffler assembly from the catalytic converter.

(6) Remove the exhaust tailpipe from the muffler:

• To remove an original equipment exhaust tailpipe/muffler combination, cut the exhaust tailpipe close to the muffler. Collapse the part remaining in the muffler and remove.
• To remove a service exhaust tailpipe/muffler combination, apply heat until the metal becomes cherry red. Remove the exhaust tailpipe/muffler clamp and twist the exhaust tailpipe out of the muffler.

INSTALLATION

(1) Install the muffler onto the catalytic converter. Install the clamp and tighten the nuts finger tight.
(2) Install the exhaust tailpipe into the rear of the muffler.
(3) Install the exhaust tailpipe/muffler assembly on the rear exhaust tailpipe hanger. Make sure that the exhaust tailpipe has sufficient clearance from the floor pan.
(4) Install the remaining clamps and the front exhaust tailpipe hanger.
(5) Tighten the nuts on the muffler-to-catalytic converter clamp to 61 N·m (45 ft. lbs.) torque (Fig. 6). Tighten the nuts on the rear exhaust tailpipe clamp to 14 N·m (10 ft. lbs.) torque (Fig. 7).
(6) Lower the vehicle.
(7) Start the engine and inspect for exhaust leaks and exhaust system contact with the body panels. Adjust the alignment, if needed.

MUFFLER AND EXHAUST TAILPIPE—YJ VEHICLES

All original equipment exhaust systems are manufactured with the exhaust tailpipe welded to the muffler. Service replacement mufflers and exhaust tailpipes are clamped together.

WARNING: IF TORCHES ARE USED WHEN WORKING ON THE EXHAUST SYSTEM, DO NOT ALLOW THE FLAME NEAR THE FUEL LINES.

REMOVAL

(1) Raise the vehicle and support the rear of the vehicle by the side rails and allow the axle to hang free.
(2) Remove the front muffler clamp from the catalytic converter and muffler connection (Fig. 6).
(3) Remove the exhaust tailpipe hanger/bracket (Fig. 9).
(4) Remove the exhaust tailpipe from the front exhaust tailpipe hanger (Fig. 10).
(5) Heat the converter-to-muffler connection with an oxyacetylene torch until the metal becomes cherry red.
(6) While the metal is still cherry red, place a block of wood against the front of the muffler and drive the muffler rearward to disengage.
(7) Remove the exhaust tailpipe/muffler assembly.
(8) Remove the exhaust tailpipe from the muffler:

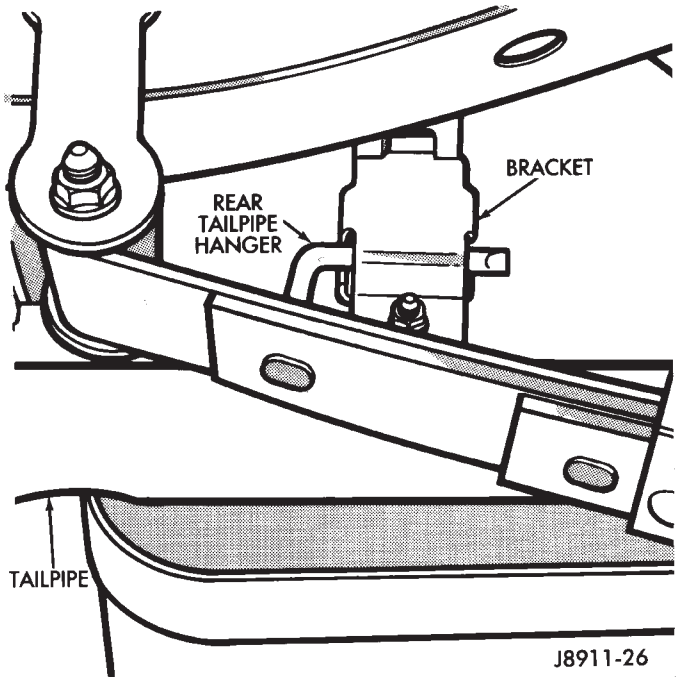

Fig. 9 Rear Exhaust Tailpipe Hanger/Bracket

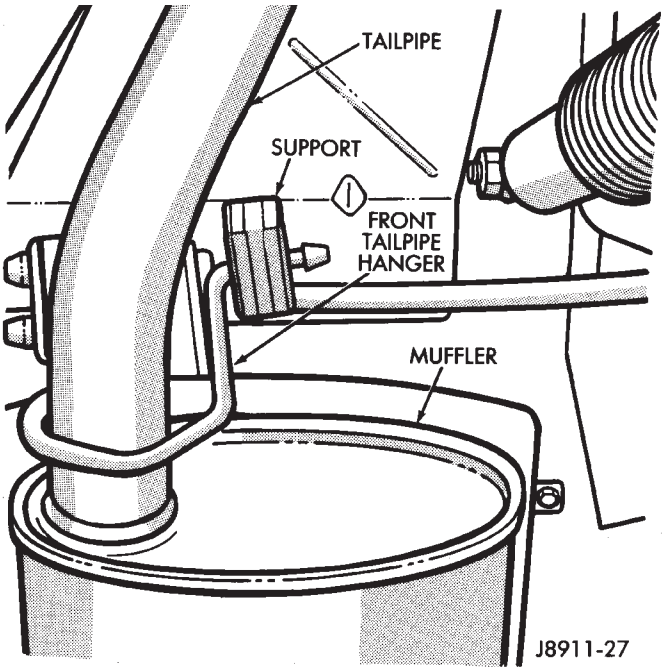

Fig. 10 Front Exhaust Tailpipe Hanger

• To remove an original equipment exhaust tailpipe/muffler combination, cut the exhaust tailpipe close to the muffler. Collapse the part remaining in the muffler and remove.
• To remove a service exhaust tailpipe/muffler combination, remove the exhaust tailpipe/muffler clamp. Heat the exhaust tailpipe-to-muffler connection with an oxyacetylene torch until the metal becomes cherry red. While the metal is still cherry red, twist the exhaust tailpipe out of the muffler.

INSTALLATION

(1) Install the muffler onto the catalytic converter outlet. Ensure that the locator on the converter aligns with the notch on the muffler, if so equipped. Install the clamp and tighten the nuts finger tight.

(2) Install the exhaust tailpipe into the muffler outlet. Ensure that the locator on the exhaust tailpipe aligns with the notch on the muffler, if so equipped. Install the clamp and tighten the nuts finger tight.

(3) Install the front exhaust tailpipe supports and the rear exhaust tailpipe hanger. Ensure that the exhaust tailpipe has sufficient clearance from the floor pan and shields.

(4) Tighten the nuts on the muffler-to-catalytic converter and the muffler-to-exhaust tailpipe clamps to 61 N·m (45 ft. lbs.) torque.

(5) Lower the vehicle.

(6) Start the engine and inspect for exhaust leaks and contact with the body panels and shields.

ENGINE EXHAUST MANIFOLD—2.5L ENGINE

REMOVAL

(1) Disconnect the battery negative cable.

(2) Remove all components attached to the intake manifold.

(3) Raise the vehicle.

(4) Disconnect the exhaust pipe from the engine exhaust manifold.

(5) Lower the vehicle.

(6) Remove fasteners 2 through 5 and remove the intake manifold (Fig. 11).

(7) Remove fasteners 1, 6 and 7 and remove the engine exhaust manifold (Fig. 11).

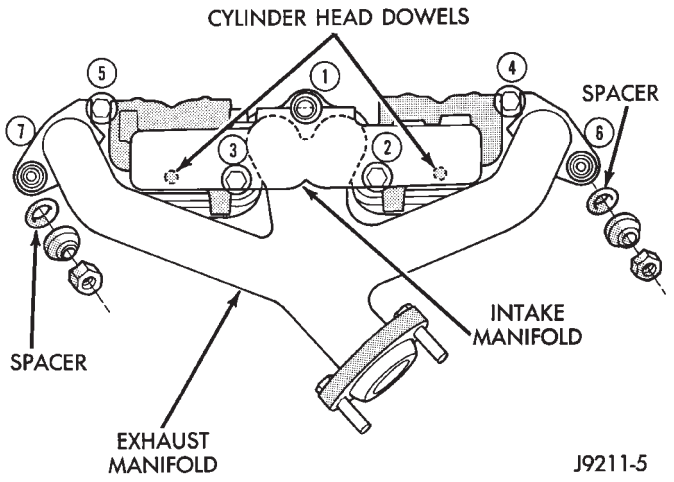

Fig. 11 Intake/Engine Exhaust Manifold Installation (2.5L Engine)

CLEANING

Clean the intake and engine exhaust manifolds and cylinder head mating surfaces. **DO NOT allow foreign material to enter either the intake manifold or the ports in the cylinder head.**

INSTALLATION

(1) Install a new intake manifold gasket over the alignment dowels on the cylinder head.

(2) Install the engine exhaust manifold assembly. **Exhaust manifold must be centrally located over the end studs and spacer (Fig. 11).**

(3) Tighten bolt No.1 to 41 N·m (30 ft. lbs.) torque (Fig. 11).

(4) Install the intake manifold on the cylinder head dowels (Fig. 11).

(5) Install bolts 2 through 5 (Fig. 11). Tighten these bolts to 31 N·m (23 ft. lbs.) torque.

(6) Install new engine exhaust manifold spacers over the engine exhaust manifold mounting studs in the cylinder head (Fig. 11).

(7) Tighten nuts 6 and 7 to 31 N·m (23 ft. lbs.) torque (Fig. 11).

(8) Install all components to the intake manifold.

(9) Raise the vehicle.

(10) Connect the exhaust pipe to the engine exhaust manifold. Tighten the bolts to 31 N·m (23 ft. lbs.) torque.

(11) Lower the vehicle.

(12) Connect the battery negative cable.

(13) Start the engine and check for leaks.

ENGINE EXHAUST MANIFOLD—4.0L ENGINE

The intake and engine exhaust manifolds on the 4.0L engine must be removed and installed together. The manifolds use a common gasket at the cylinder head.

Refer to Intake Manifold—4.0L Engine in this section for the proper removal and installation procedures.

INTAKE MANIFOLD—2.5L ENGINE

REMOVAL

(1) Disconnect the battery negative cable.

(2) Remove the air inlet hose from the throttle body and air cleaner.

(3) Loosen the accessory drive belt tension and remove the belt from the power steering pump.

(4) Remove the power steering pump and brackets from the water pump and intake manifold. Support power steering pump and bracket with mechanics wire attached to the radiator upper crossmember.

(5) Remove the fuel tank filler cap to relieve the fuel tank pressure.

(6) Install the fuel tank filler cap.

(7) Disconnect fuel supply and return tube from the fuel rail (refer to Group 14, Fuel System - Quick Connect Fittings).

(8) Disconnect the accelerator cable from the throttle body and the holddown bracket.

CAUTION: When disconnecting the cruise control connector at the throttle body, DO NOT pry the connector off with pliers or screwdriver. Use finger pressure only. Prying the connector off could break it.

(9) Disconnect the electrical connectors. Pull the harnesses away from the manifold.
- The throttle position sensor.
- The idle speed control motor.
- The coolant temperature sensor at the thermostat.
- The manifold air temperature sensor at the intake manifold.
- The fuel injectors.
- The oxygen sensor.

(10) Disconnect the crankcase ventilation (CCV) vacuum hose and manifold absolute pressure (MAP) sensor vacuum hose connector at the intake manifold.

(11) Disconnect vacuum hose from vacuum port on the intake manifold.

(12) Disconnect CCV hose at the cylinder head cover (Fig. 12).

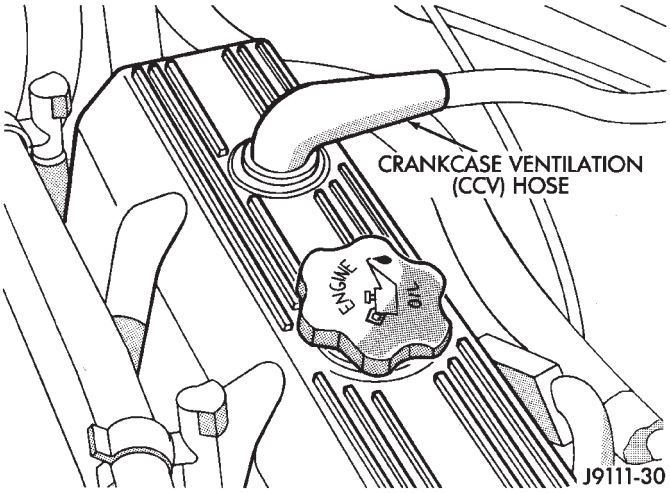

Fig. 12 Crankcase Ventilation (CCV) Hose (2.5L Engine)

(13) Remove the molded vacuum harness.

(14) Disconnect the vacuum brake booster hose at the intake manifold.

(15) Remove bolts 2 through 5 securing the intake manifold to the cylinder head (Fig. 11). Slightly loosen bolt No.1 and nuts 6 and 7.

(16) Remove the intake manifold and gaskets. Drain the coolant from the manifold.

CLEANING

Clean the intake manifold and cylinder head mating surfaces. **DO NOT allow foreign material to enter either the intake manifold or the ports in the cylinder head.**

INSTALLATION

(1) Install the new intake manifold gasket over the locating dowels.

(2) Position the manifold in place and finger tighten the mounting bolts.

(3) Tighten the fasteners in sequence and to the specified torque (Fig. 11).
- Fastener No.1—Tighten to 41 N·m (30 ft. lbs.) torque.
- Fasteners Nos.2 through 7—Tighten to 31 N·m (23 ft. lbs.) torque.

(4) Connect the fuel return and supply tube to the connector next to the fuel rail. Push them into the fitting until a click is heard. Verify that the connections are complete.
- First, ensure only the retainer tabs protrude from the connectors.
- Second, pull out on the fuel tubes to ensure they are locked in place.

(5) Connect the molded vacuum hoses to the vacuum port on the intake manifold and the cylinder head cover.

(6) Connect the electrical connectors.
- The throttle position sensor.
- The automatic idle speed control motor.
- The coolant temperature sensor at the thermostat housing.
- The fuel injectors.
- The air manifold temperature sensor.
- The oxygen sensor.

(7) Connect the CCV vacuum hose and MAP sensor vacuum hose connectors to the throttle body.

(8) Install the power steering pump and bracket assembly to the water pump and intake manifold.

(9) Connect the accelerator cable and cruise control cable to the holddown bracket and the throttle arm.

CAUTION: Ensure that the accessory drive belt is routed correctly. Failure to do so can cause the water pump to turn in the opposite direction resulting in engine overheating. Refer to Group 7, Cooling System for the proper procedure.

(10) Tension the accessory drive belt. Refer to Group 7, Cooling System for the proper procedure.

(11) Connect the air inlet hose to the throttle body and the air cleaner.

(12) Connect the battery negative cable.

(13) Start the engine and check for leaks.

INTAKE MANIFOLD—4.0L ENGINE

The intake and engine exhaust manifolds on the 4.0L engine must be removed and installed together. The two manifolds use a common gasket at the cylinder head.

REMOVAL

(1) Disconnect the battery negative cable.

(2) Remove air cleaner inlet hose from throttle plate assembly.
(3) Remove the air cleaner assembly.
(4) Remove the throttle cable, cruise control cable (if equipped) and the transmission line pressure cable.
(5) Disconnect all electrical connectors on the intake manifold.
(6) Disconnect and remove the fuel supply and return lines from the fuel rail assembly (refer to Group 14, Fuel System).
(7) Loosen the accessory drive belt (refer to Group 7, Cooling System). Loosen the tensioner.
(8) Remove the power steering pump and bracket from the intake manifold and set aside.
(9) Remove the fuel rail and injectors (refer to Group 14, Fuel System).
(10) Raise the vehicle.
(11) Disconnect the exhaust pipe from the engine exhaust manifold. Discard the seal.
(12) Lower the vehicle.
(13) Remove the intake manifold and engine exhaust manifold.

CLEANING

Clean the mating surfaces of the cylinder head and the manifold if the original manifold is to be installed.

If the manifold is being replaced, ensure all the fitting, etc. are transferred to the replacement manifold.

INSTALLATION

(1) Install a new exhaust/intake manifold gasket over the alignment dowels on the cylinder head.
(2) Position the engine exhaust manifold to the cylinder head. Install fastener No.3 and finger tighten at this time (Fig. 13).
(3) Install intake manifold on the cylinder head dowels.
(4) Install washers and fasteners Nos.1, 2, 4, 5, 8, 9, 10 and 11 (Fig. 13).
(5) Install washers and fasteners Nos.6 and 7 (Fig. 13).
(6) Tighten the fasteners in sequence and to the specified torque (Fig. 13).
• Fasteners Nos.1 through 5—Tighten to 33 N·m (24 ft. lbs.) torque.
• Fasteners Nos.6 and 7—Tighten to 31 N·m (23 ft. lbs.) torque.
• Fasteners Nos.8 through 11—Tighten to 33 N·m (24 ft. lbs.) torque.

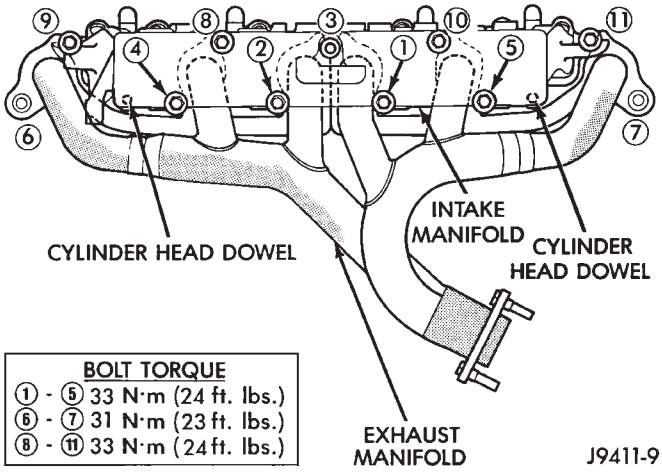

Fig. 13 Intake/Engine Exhaust Manifold Installation (4.0L Engine)

(7) Install the fuel rail and injectors.
(8) Install the power steering pump and bracket to the intake manifold. Tighten the belt to specification. Refer to Group 7, Cooling System for the proper procedures.
(9) Install the fuel supply and return lines to the fuel rail assembly. **Before connecting the fuel lines to the fuel rail replace the O-rings in the quick-connect fuel line couplings.** Refer to Group 14, Fuel System for the proper procedure.
(10) Connect all electrical connections on the intake manifold.
(11) Connect the vacuum connector on the intake manifold and install it in the bracket.
(12) Install throttle cable, cruise control cable (if equipped).
(13) Install the transmission line pressure cable (if equipped). Refer to Group 21, Transmission for the adjustment procedures.
(14) Install air cleaner assembly.
(15) Connect air inlet hose to the throttle plate assembly.
(16) Raise the vehicle on a side mounted hoist.
(17) Using a new seal, connect the exhaust pipe to the engine exhaust manifold. Tighten the bolts to 31 N·m (23 ft. lbs.) torque.
(18) Lower the vehicle.
(19) Connect the battery negative cable.
(20) Start the engine and check for leaks.

TORQUE SPECIFICATIONS

Description	Torque
Catalytic Converter/Exhaust Pipe Clamp Nuts	61 N•m (45 ft. lbs.)
Crossmember-to-Sill Bolts	41 N•m (30 ft. lbs.)
Exhaust Pipe-to-Manifold Nuts	31 N•m (23 ft. lbs.)
Exhaust Manifold Bolt #1 2.5L Engine	41 N•m (30 ft. lbs.)
Exhaust Manifold Bolts #2-5 2.5L Engine	31 N•m (23 ft. lbs.)
Exhaust/Intake Manifold Nut/ Bolts #1-5 & #8-11 4.0L Engine	33 N•m (24 ft. lbs.)
Exhaust Manifold Nuts #6 & 7 2.5L Engine	31 N•m (23 ft. lbs.)
Exhaust Manifold Nuts #6 & 7 4.0L Engine	31 N•m (23 ft. lbs.)
Intake Manifold Bolt #1 2.5L Engine	41 N•m (30 ft. lbs.)
Intake Manifold Bolts #2-5 2.5L Engine	31 N•m (23 ft. lbs.)
Muffler-to-Catalytic Converter Clamp Nuts	61 N•m (45 ft. lbs.)
Oxygen Sensor	48 N•m (35 ft. lbs.)
Rear Tail Pipe Clamp Nuts	14 N•m (10 ft. lbs.)

J9411-10

FRAME AND BUMPERS

CONTENTS

	page		page
BUMPERS	**5**	**FRAME**	**1**
BUMPERS	**16**	**FRAME**	**10**

FRAME

INDEX

	page		page
Frame Dimensions	1	Fuel Tank Support Strap	4
Front Skid Plate	1	General Information	1
Fuel Filler Hose Splash Shield—XJ Vehicles	4	Transfer Case Skid Plate	3
Fuel Tank Skid Plate	3		

GENERAL INFORMATION

Jeep XJ Vehicles (Fig. 1) and the cab section of Jeep are constructed as a unitized body and frame.

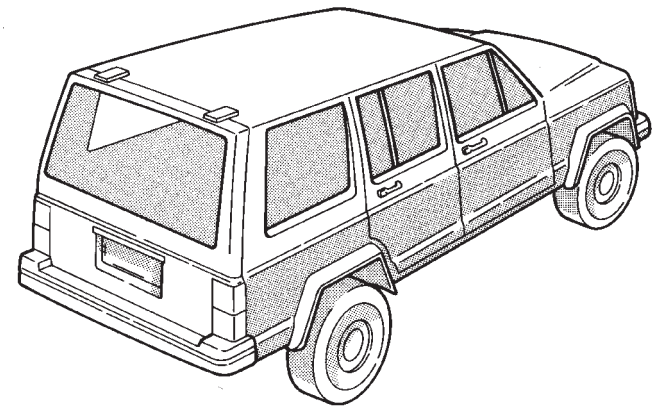

J91IN-12

Fig. 1 Jeep—XJ

Jeep XJ unibodies are constructed from special high-strength steel and coated metals. These types of metals reduce weight and provide strength.

A vehicle constructed as a unibody reacts differently to the impact of a collision. While the damage at the immediate point of impact is easily recognizable, the damage must be diagnosed to expose it.

With unibody construction, there are five logical areas to examine to expose damage:

- Damage at the immediate point of impact—primary damage.
- The other (lessor) body damage—secondary damage.
- Damage to the exterior trim and other surface-attached components.
- Damage to the mechanical components.
- The interior trim and accessory damage.

When there is damage to a vehicle, the alignment points must be returned too specifications.

FRAME DIMENSIONS

Frame dimensions are listed in millimeter scale. All dimensions are from center to center of Principal Locating Point (PLP), or from center to center of PLP and fastener location (Fig. 2).

FRONT SKID PLATE

REMOVAL

(1) Remove the screws that attach skid plate to side sills (Fig. 3).

(2) Remove the nuts that attach the skid plate to the crossmember (Fig. 3).

(3) Remove the skid plate from the vehicle (Fig. 3).

INSTALLATION

(1) Position the skid plate at front crossmember and side sills (Fig. 3).

(2) Install the nuts to attach the skid plate to crossmember.

(3) Install the screws to attach skid plate to side sills.

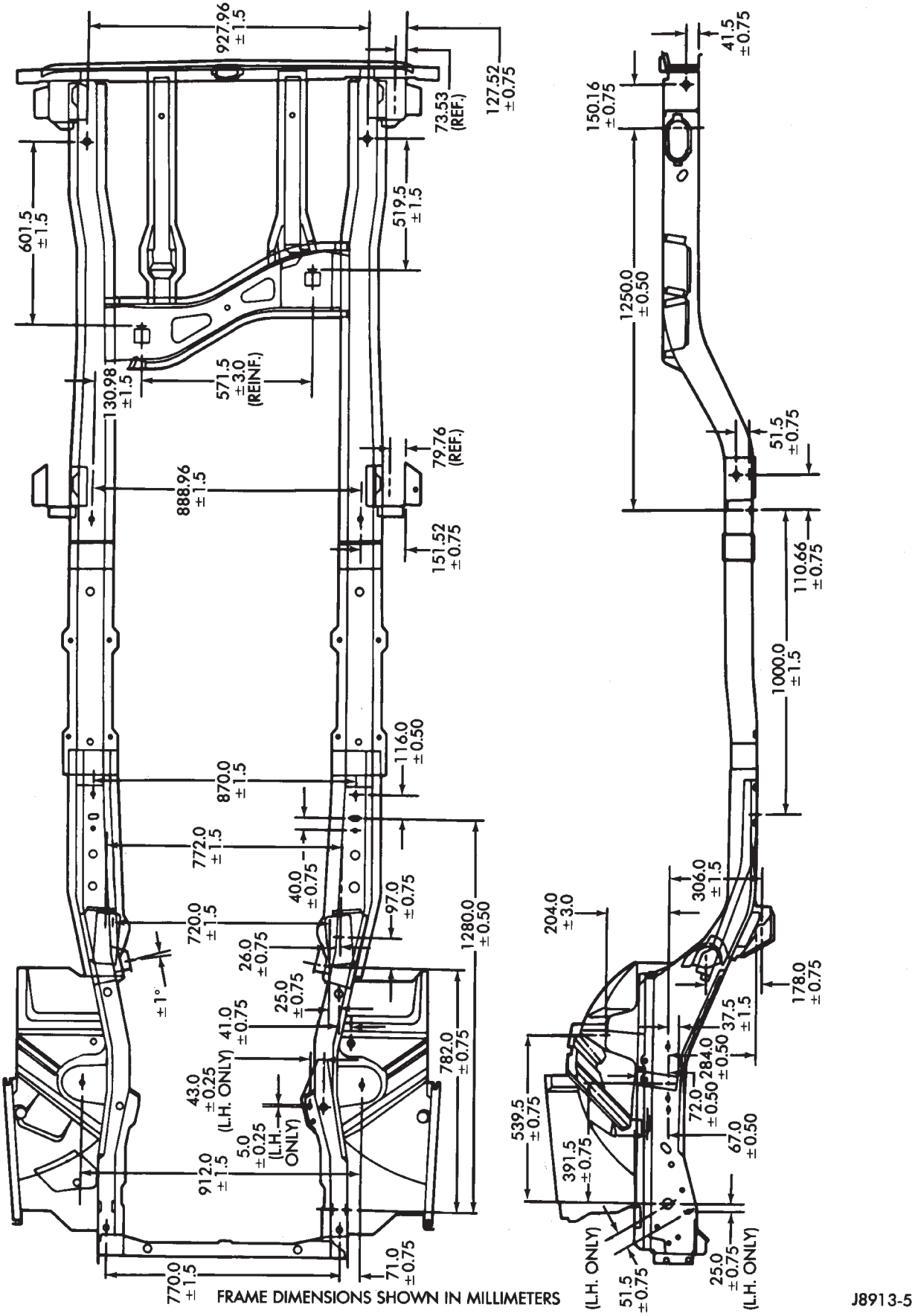

Fig. 2 Frame Alignment Reference Dimensions—XJ Vehicles

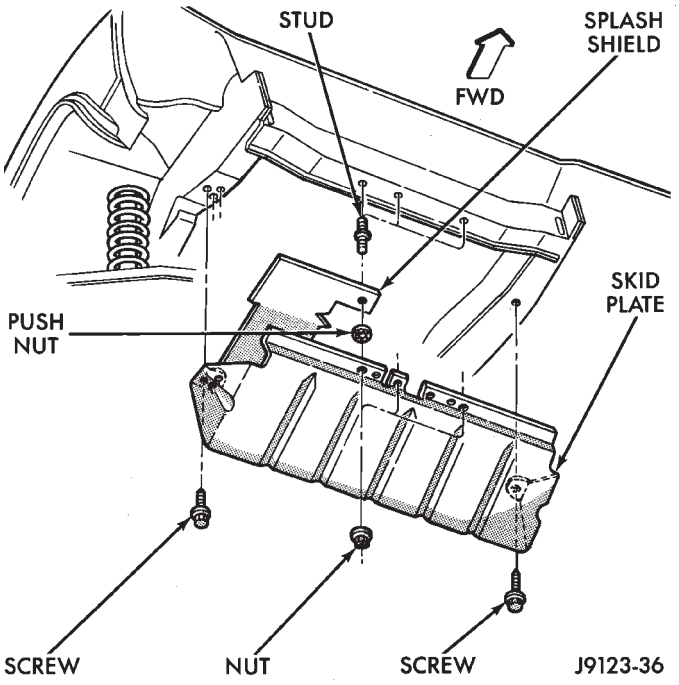

Fig. 3 Front Skid Plate Removal/Installation

TRANSFER CASE SKID PLATE

REMOVAL

(1) Support the skid plate.

(2) Remove the bolts that attach the skid plate to the transmission support crossmember and frame sill (Fig. 4).

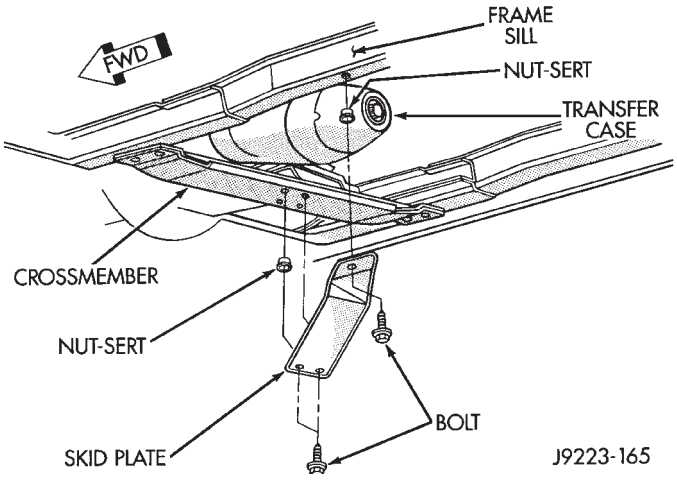

Fig. 4 Transfer Case Skid Plate

(3) Remove the support and skid plate from the vehicle.

INSTALLATION

(1) Position and support the skid plate at the frame sill and transmission support crossmember (Fig. 4).

(2) Attach the skid plate to the frame sill and crossmember with bolts. Tighten bolts to 22 N·m (16 ft. lbs.) torque.

FUEL TANK SKID PLATE

REMOVAL

(1) Position a support under skid plate.

(2) Remove the bolts that attach skid plate to underbody side rails (Fig. 5 and 6).

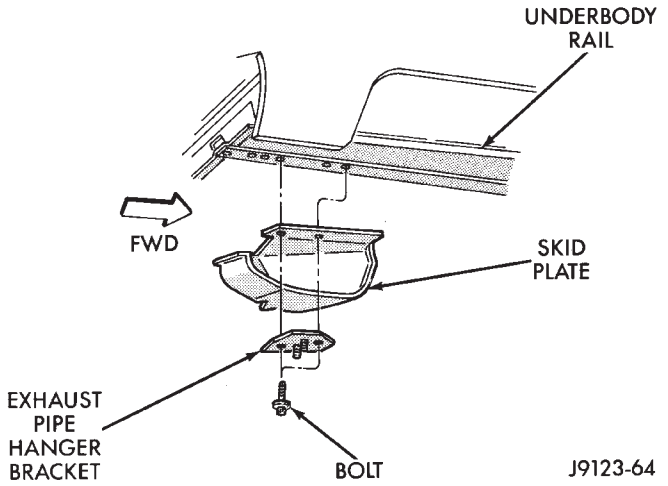

Fig. 5 Fuel Tank Skid Plate W/O Trailer Hitch Or Tow Hook

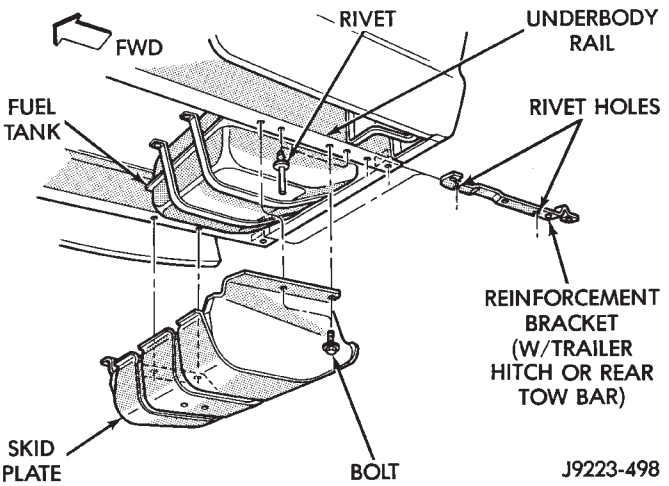

Fig. 6 Fuel Tank Skid Plate With Trailer Hitch Or Tow Hook

(3) Remove the support and the skid plate from the vehicle.

INSTALLATION

(1) Position and support skid plate under fuel tank.

(2) Install bolts to attach the skid plate to underbody rails. Tighten the bolts to 50 N·m (37 ft. lbs.) torque.

(3) Remove the support from under skid plate.

FUEL FILLER HOSE SPLASH SHIELD—XJ VEHICLES

REMOVAL

(1) Remove the screws that attach fuel filler hose splash shield to wheelhouse panel and frame rail (Fig. 7).

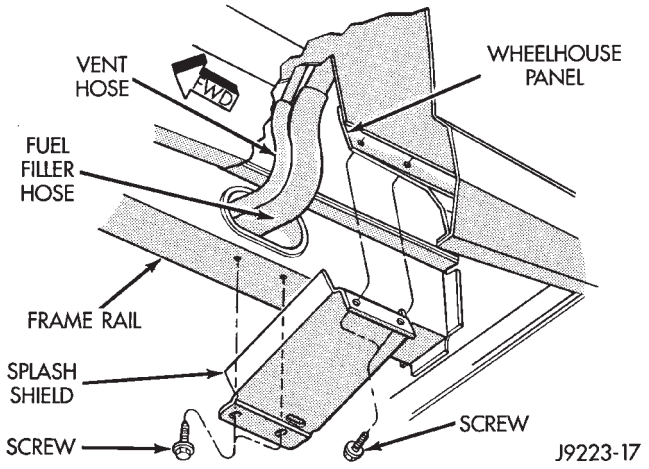

Fig. 7 Fuel Filler Hose Splash Shield—XJ Vehicles

(2) Remove the hose splash shield from wheelhouse panel and frame rail (Fig. 7).

INSTALLATION

(1) Position fuel filler hose splash shield at wheelhouse panel and frame rail.

(2) Install screws to attach splash shield to wheelhouse panel and frame rail.

FUEL TANK SUPPORT STRAP

SERVICE INFORMATION

XJ fuel tank support straps are attached to the underside of the vehicle via T-slots and hole-slots in the frame members.

REMOVAL

(1) If equipped, position a support under skid plate.

(2) If equipped, remove the bolts that attach skid plate to underbody side rails.

(3) If applicable, remove the support and skid plate from fuel tank.

(4) Support fuel tank.

(5) Loosen nut from fuel tank support strap bolt to allow bolt head to be removed from hole-slot in frame member (Fig. 8).

(6) Remove the strap T-end from frame member T-slot (Fig. 9).

(7) Separate support strap from fuel tank and remove it from vehicle.

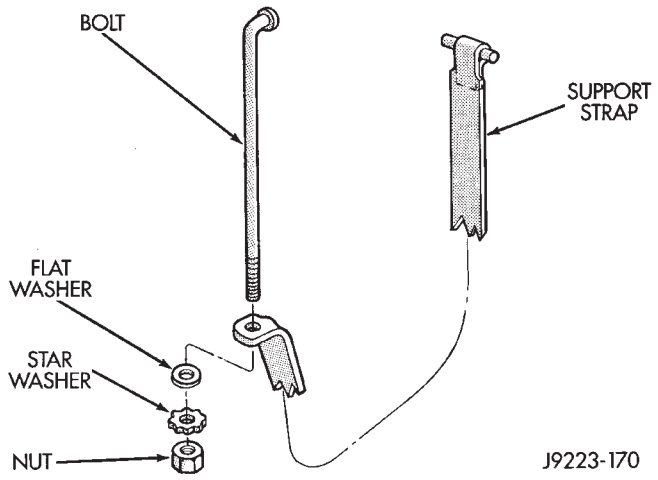

Fig. 8 Fuel Tank Support Strap—XJ Vehicles

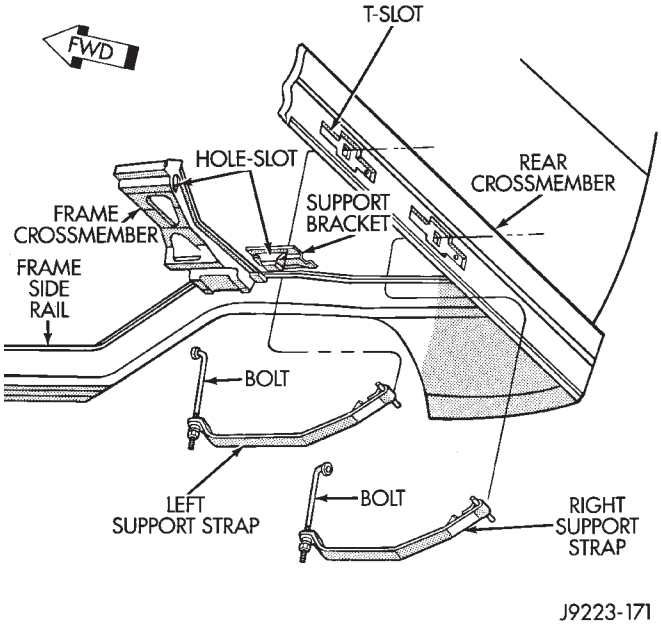

Fig. 9 Fuel Tank Support Straps—XJ Vehicles

INSTALLATION

(1) Position support strap around fuel tank.

(2) Insert strap T-end in frame member T-slot.

(3) Insert bolt in hole-slot in frame member. Tighten nut on the bolt until bolt-head and T-end are seat and strap is tight against the bottom of fuel tank.

(4) Remove the support from the fuel tank.

(5) If removed, position and support and the fuel tank skid plate under the fuel tank.

(6) If applicable, install the bolts that attach the skid plate to the underbody side rails. Tighten the bolts to 50 N·m (37 ft. lbs.) torque.

(7) Remove the support from under the skid plate.

BUMPERS

INDEX

	page		page
Front Bumper	5	Rear Bumper	8
Front Tow Hooks	7	Rear Tow Hook	9

FRONT BUMPER

REMOVAL/DISASSEMBLY

(1) The bumper guards, end caps and tow hooks can be removed from XJ front bumpers with the bumper attached to the vehicle. Do not remove the bumper from the vehicle if only these components require service.

If equipped with a brush guard, refer to the Brush Guard Removal within Group 23, Body Components.

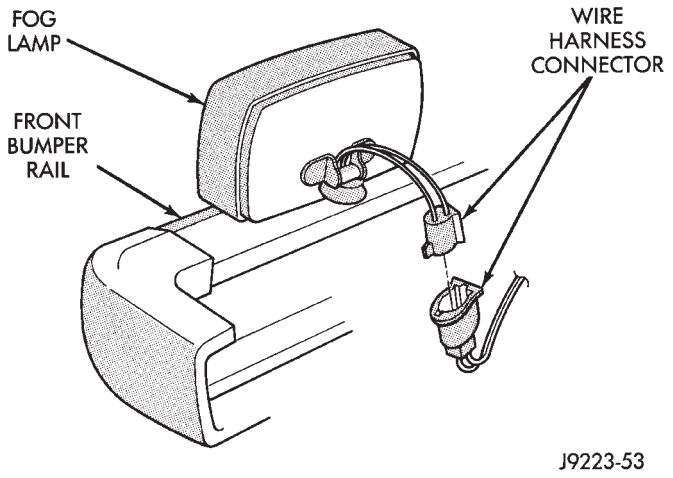

Fig. 1 Fog Lamp Wire Harness Connector

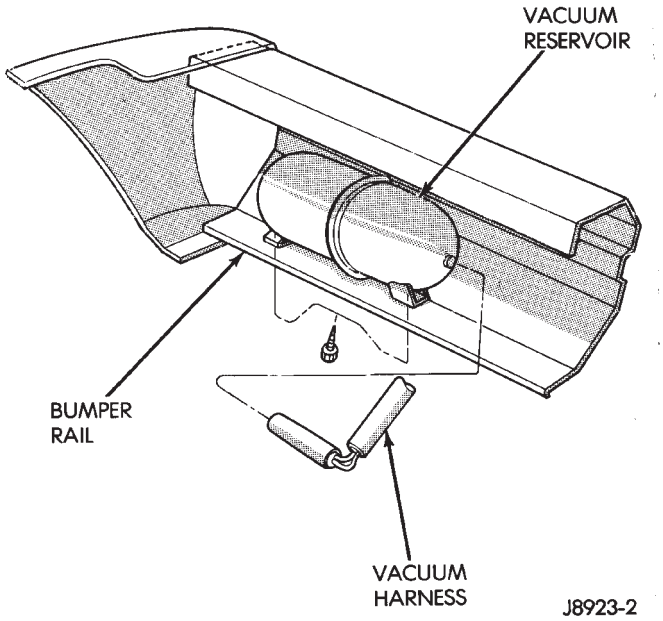

Fig. 2 Vacuum Reservoir—Left Side

(2) Disconnect the fog lamp wire harness connectors, if equipped (Fig. 1).

(3) Disconnect the vacuum reservoir tube harness connectors (Fig. 2 and 3).

(4) Remove the locknuts and Torx-head bolts that attach the tow hook straps (Fig. 4) to the underbody sillmember.

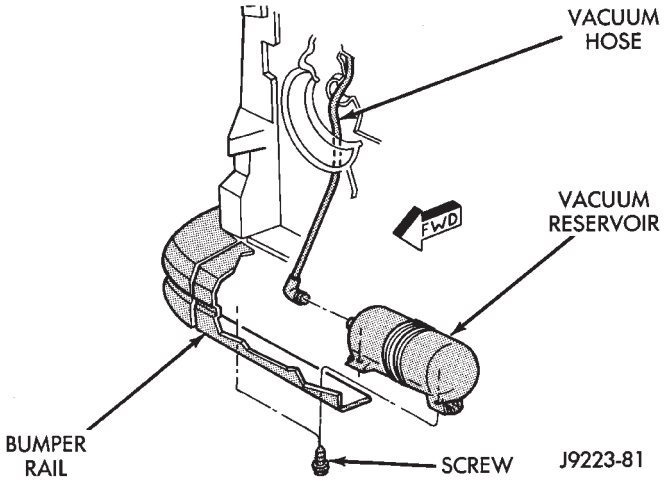

Fig. 3 Vacuum Reservoir—Right Side With Speed Control Only

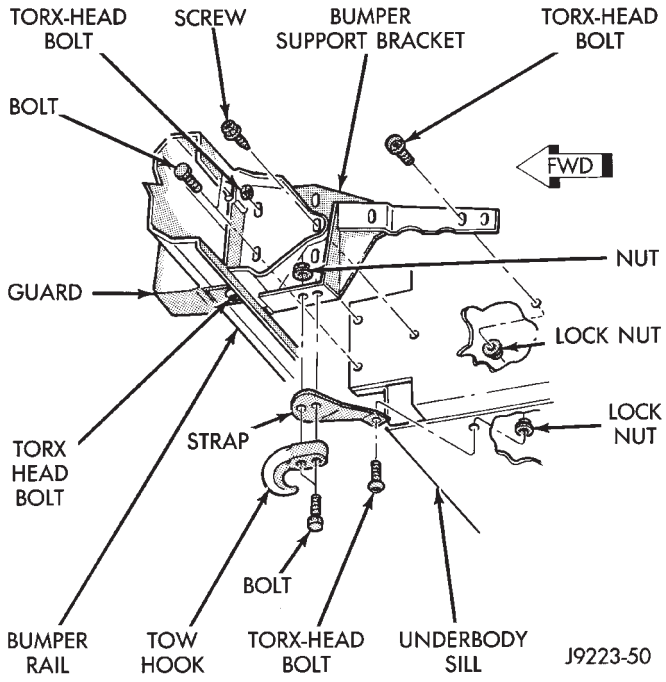

Fig. 4 Tow Hook & Strap—XJ Vehicles

The retaining screws and the steering gear skid plate must be removed before the left strap can be removed from the sillmember.

(5) Detach the tow hook straps from the sillmember.

(6) Support the bumper.

(7) Remove the bolts that attach the bumper support brackets to the right and left sillmembers (Fig. 5).

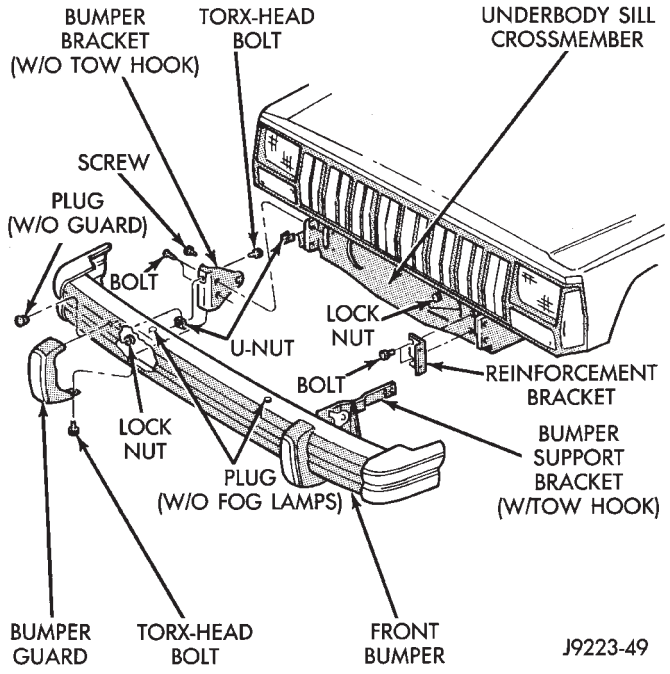

Fig. 5 Front Bumper Removal/Installation

(8) Remove the support and the bumper from the vehicle (Fig. 5).

(9) Remove the nuts and bolts that attach the tow hooks to the bumper support brackets.

(10) Remove the support brackets (Fig. 6), bumper guards (Fig. 7) and caps (Fig. 8) from the bumper rail.

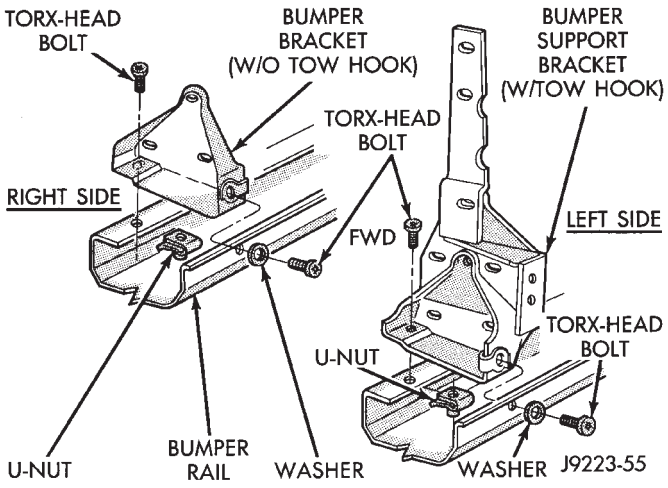

Fig. 6 Bumper Support Bracket Removal/Installation

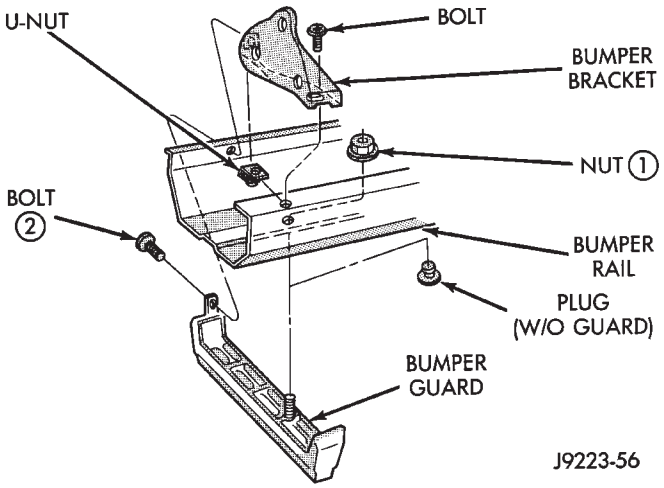

Fig. 7 Bumper Guard Removal/Installation

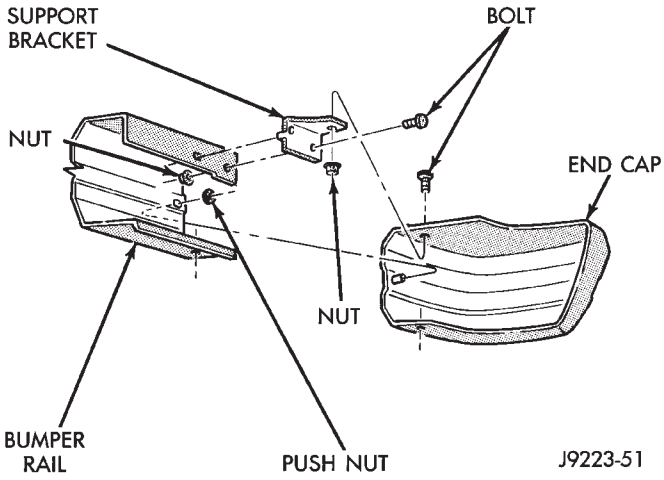

Fig. 8 Bumper End Cap Removal/Installation

(11) Remove the license plate bracket (Fig. 9), if equipped, from the bumper rail.

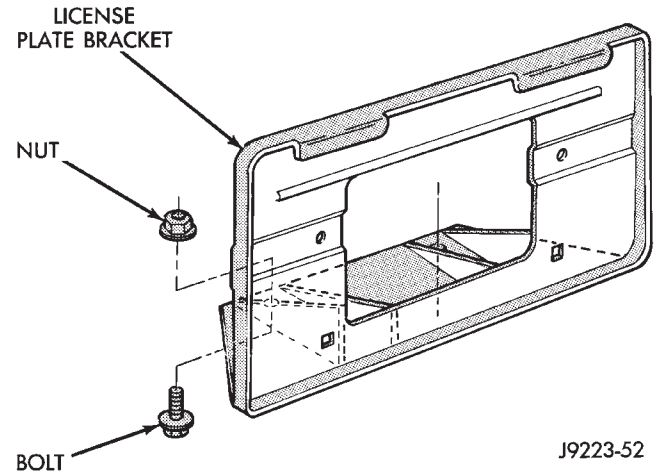

Fig. 9 Bumper License Plate Bracket Removal/ Installation

(12) Remove the fog lamps (Fig. 10) from the bumper rail.

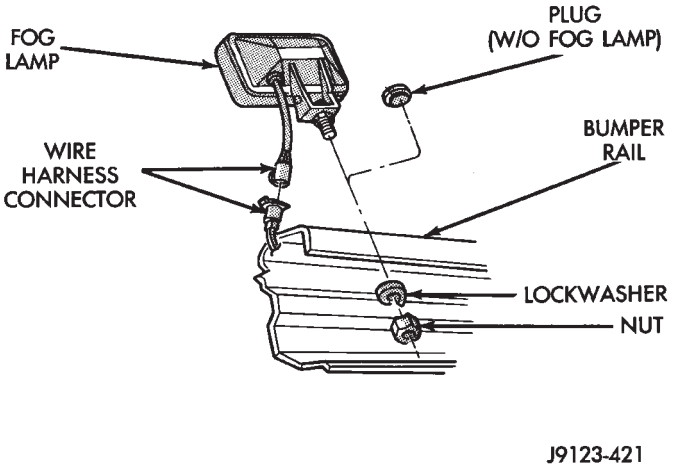

Fig. 10 Fog Lamp

(13) If necessary, remove the vacuum reservoir(s) from the bumper rail.

(14) If necessary, remove the sill crossmember reinforcement brackets from the sillmembers.

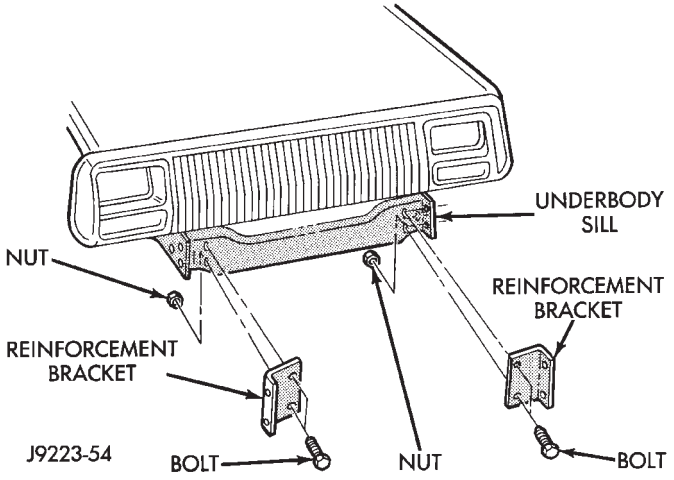

Fig. 11 Reinforcement Brackets

ASSEMBLY/INSTALLATION

(1) If removed, install the sill crossmember reinforcement brackets on the sillmembers (Fig. 11). Tighten bolts to 56 N·m (41 ft. lbs.) torque.

(2) If equipped, install the bumper support brackets and bumper guards on the bumper rail. Tighten hardware in the sequence indicated in (Fig. 6). Tighten the locknuts with 20 N·m (15 ft. lbs.) torque. Tighten bolts to 56 N·m (41 ft. lbs.) torque.

(3) If not equipped with bumper guards, install the bumper support brackets on the bumper rail. Tighten bolts to 56 N·m (41 ft. lbs.) torque.

(4) Install tow hooks. Tighten nuts with 100 N·m (74 ft. lbs.) torque.

(5) Install the bumper end caps on the bumper rail. Tighten nuts with 8 N·m (72 in. lbs.) torque.

(6) Install the license plate bracket on the bumper rail. Tighten the nuts securely.

(7) Install the fog lamps on the bumper rail. Tighten the nuts to 20 N·m (15 ft. lbs.) torque.

(8) If removed, install the vacuum reservoir(s) on the bumper rail. Tighten the retaining screws and bolts to 8 N·m (72 in. lbs.) torque.

(9) Position and support the bumper at the front of the vehicle.

(10) Attach the bumper support brackets to the right and left sillmembers and reinforcement brackets. Tighten screws and bolts to 56 N·m (41 ft. lbs.) torque.

(11) Install the Torx-head bolts and locknuts that attach the tow hook straps to the underbody sillmember. Tighten locknuts with 30 N·m (22 ft. lbs.) torque.

Install the steering gear skid plate and screws after the left tow hook strap has been installed.

(12) Connect the fog lamp wire harness connectors.

(13) Connect the vacuum reservoir tube harness connectors.

(14) Remove the bumper support.

FRONT TOW HOOKS

If a tow hook must be replaced or removed only for service access, remove the nuts and bolts that attach it to the bumper support bracket. When installing a tow hook, tighten nuts with 100 N·m (74 ft. lbs.) torque.

If a tow hook/bumper support bracket must be replaced, refer to the following removal and installation procedures.

REMOVAL

If equipped with a brush guard, refer to the Brush Guard Removal within Group 23, Body Components.

(1) Disconnect the fog lamp wire harness connectors, if equipped.

(2) Disconnect the vacuum reservoir tube harness connectors.

(3) Support the bumper.

(4) Remove the bolts that attach the bumper support brackets to the right and left sillmembers.

(5) Remove the locknuts and Torx-head bolts that attach the tow hook straps to the underbody sillmember.

The retaining screws and the steering gear skid plate must be removed before the left strap can be removed from the sillmember.

(6) Detach the tow hook straps from the sillmember.

(7) Remove the support and the bumper from the vehicle.

(8) Remove the nuts and bolts that attach the tow hooks to the bumper support brackets.

(9) Remove the tow hook from the bumper support bracket.

(10) Remove the support bracket from the bumper rail.

INSTALLATION

(1) Install the bumper guard and bumper support bracket on the bumper rail. Tighten the retaining hardware in the sequence indicated in Figure 7. Tighten locknuts to 20 N·m (15 ft. lbs.) torque. Tighten bolts to 56 N·m (41 ft. lbs.) torque.

(2) If not equipped with bumper guards, install the bumper support bracket on the bumper rail. Tighten bolts to 56 N·m (41 ft. lbs.) torque.

(3) Position the tow hook at the support bracket. Install the bolts and nuts that attach tow hook to the bumper support bracket. Tighten nuts to 100 N·m (74 ft. lbs.) torque.

(4) Position and support the bumper at the front of the vehicle.

(5) Attach the bumper support brackets to the right and left sillmembers and reinforcement brackets. Tighten screws and bolts to 56 N·m (41 ft. lbs.) torque.

(6) Install the Torx-head bolts and locknuts that attach the tow hook straps to the underbody sillmember. Tighten locknuts to 30 N·m (22 ft. lbs.) torque.

Install the steering gear skid plate and screws after the left tow hook strap has been installed.

(7) Connect the fog lamp wire harness connectors. Connect the vacuum reservoir tube harness connectors.

(8) Remove the bumper support.

REAR BUMPER

REMOVAL

(1) For vehicles equipped with a trailer hitch, remove the hitch before removing the bumper. If necessary, refer to the removal procedure within Group 23, Body Components.

(2) Raise and support the rear of the vehicle.

(3) Support the bumper.

(4) Remove the bolts that attach the bumper support brackets to the sill crossmember (Fig. 12).

(5) Remove the support and the rear bumper from the vehicle.

(6) Remove the bumper support brackets and splash shield the bumper, if necessary (Fig. 13).

(7) Remove the bumper end caps (Fig. 14) and bumper guards from the bumper (Fig. 15), if necessary.

INSTALLATION

(1) As applicable, install the splash shield and bumper support brackets, the bumper end caps and the bumper guards.

(2) Tighten the bumper support bolts to 56 N·m (41 ft. lbs.).

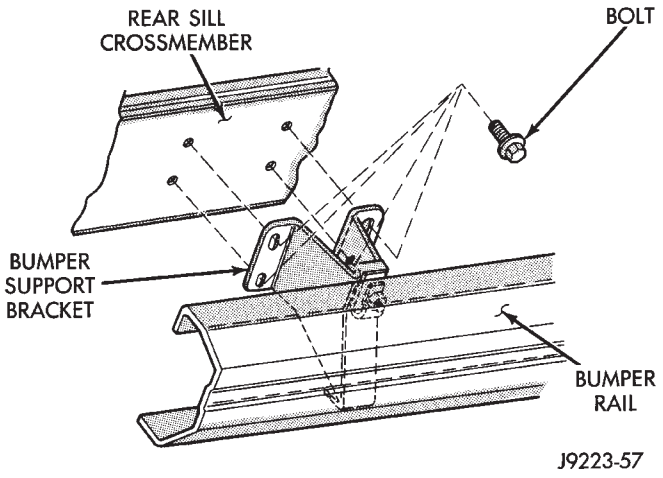

Fig. 12 Rear Bumper Removal/Installation—XJ Vehicles

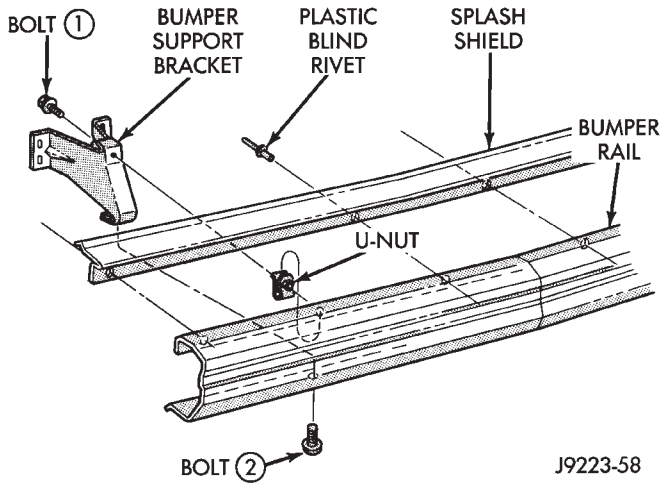

Fig. 13 Bumper Bracket & Splash Shield Removal/ Installation—XJ Vehicles

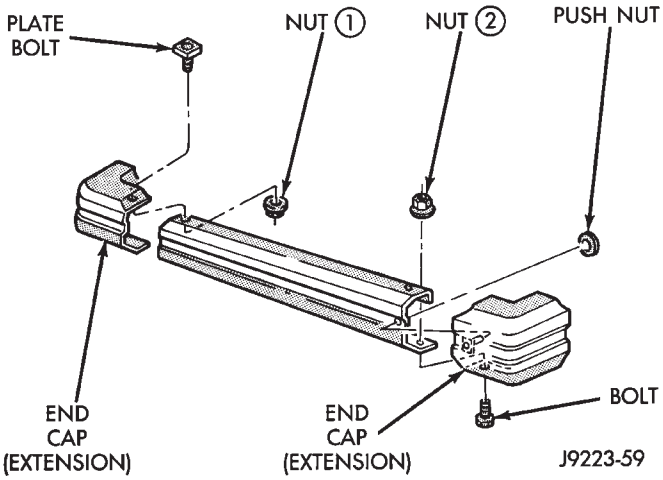

Fig. 14 Bumper End Cap Removal/Installation—XJ Vehicles

(3) Tighten the nuts in the sequence depicted in Figure 14. Tighten the bumper end cap plate bolt

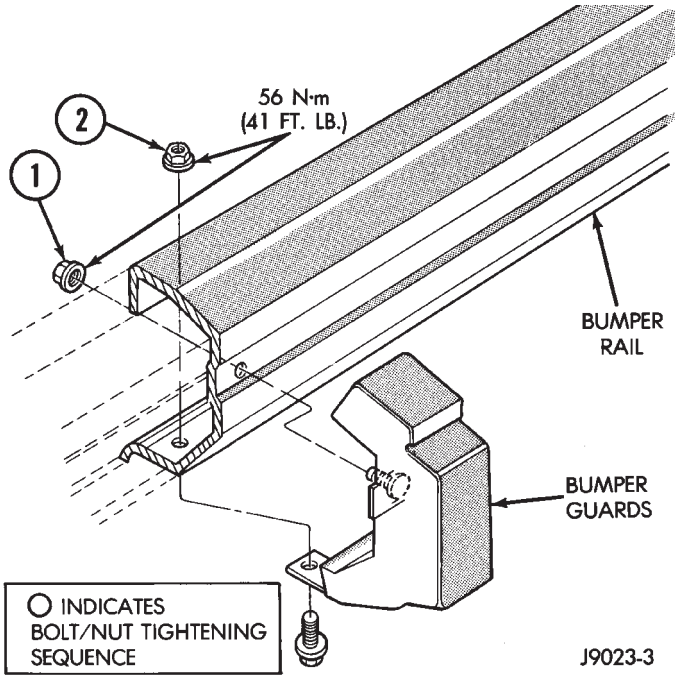

Fig. 15 Bumper Guard Removal/Installation—XJ Vehicles

nuts to 22 N·m (16 ft. lbs.) torque. Tighten the lower bolt nuts to 8 N·m (6 ft. lbs.) torque.

(4) If applicable, tighten the bumper guard bolts/nuts to 56 N·m (41 ft. lbs.).

(5) Position and support the bumper with the bracket holes aligned with the sill crossmember holes. Install the bracket-to-crossmember bolts. Tighten the bolts to 42 N·m (31 ft. lbs.) torque.

(6) If removed, install the trailer hitch. If necessary, refer to the installation procedure within Group 23, Body Components.

REAR TOW HOOK

REMOVAL

(1) Remove the bolts that attach tow hook bracket to the frame rail and reinforcement bracket (Fig. 16). **The reinforcement bracket is held on the frame rail with two blind rivets.**

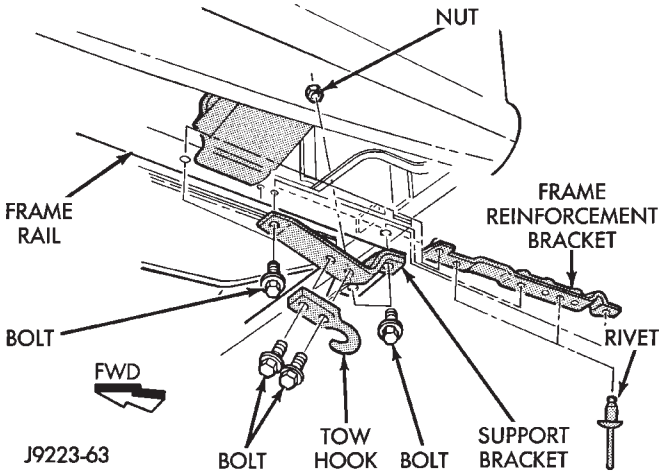

Fig. 16 Rear Tow Hook—XJ Vehicles

(2) Remove the bracket and tow hook from frame rail.

INSTALLATION

(1) Position bracket and tow hook on the frame rail.

(2) Install bolts that attach tow hook bracket to frame rail and reinforcement bracket. Tighten bolts to 75 N·m (55 ft. lbs.) torque.

FRAME

INDEX

	page
Frame Dimensions	13
Frame Repairs	13
Frame Straightening	13
Fuel Tank Skid Plate	15
General Information	10
Generator Splash Shield	13
Safety Precautions and Warnings	10
Tow Hooks	13
Transfer Case Skid Plate	15

SAFETY PRECAUTIONS AND WARNINGS

WARNING: USE EYE PROTECTION WHEN GRINDING OR WELDING METAL, SERIOUS EYE INJURY CAN RESULT.

BEFORE PROCEEDING WITH FRAME REPAIR INVOLVING GRINDING OR WELDING, VERIFY THAT VEHICLE FUEL SYSTEM IS NOT LEAKING OR IN CONTACT WITH REPAIR AREA, PERSONAL INJURY CAN RESULT.

DO NOT ALLOW OPEN FLAME TO CONTACT PLASTIC BODY PANELS. FIRE OR EXPLOSION CAN RESULT.

WHEN WELDED FRAME COMPONENTS ARE REPLACED, 100% PENETRATION WELD MUST BE ACHIEVED DURING INSTALLATION. IF NOT, DANGEROUS OPERATING CONDITIONS CAN RESULT.

STAND CLEAR OF CABLES OR CHAINS ON PULLING EQUIPMENT DURING FRAME STRAIGHTENING OPERATIONS, PERSONAL INJURY CAN RESULT.

DO NOT VENTURE UNDER A HOISTED VEHICLE THAT IS NOT SUPPORTED ON SAFETY STANDS, PERSONAL INJURY CAN RESULT.

CAUTION: Do not reuse damaged fasteners, quality of repair would be suspect.

Do not drill holes in top or bottom frame rail flanges, frame rail failure can result.

Do Not use softer than Grade 3 bolts to replace production fasteners, loosening or failure can result.

When using heat to straighten frame components do not exceed 566°C (1050°F), metal fatigue can result.

Welding the joints around riveted cross members and frame side rails can weaken frame

GENERAL INFORMATION

The Jeep YJ (Fig. 1) frame is the structural center of the vehicle. In addition to supporting the body and payload, the frame provides a station for the engine. The vehicle body is attached to the frame with holddowns (Fig. 2 and 3).

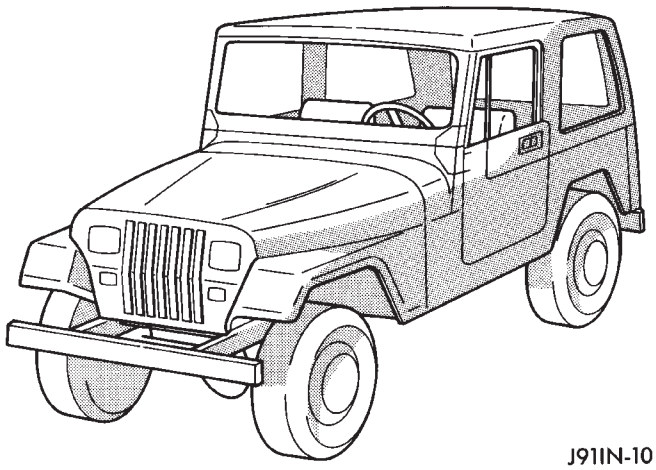

Fig. 1 Jeep—YJ

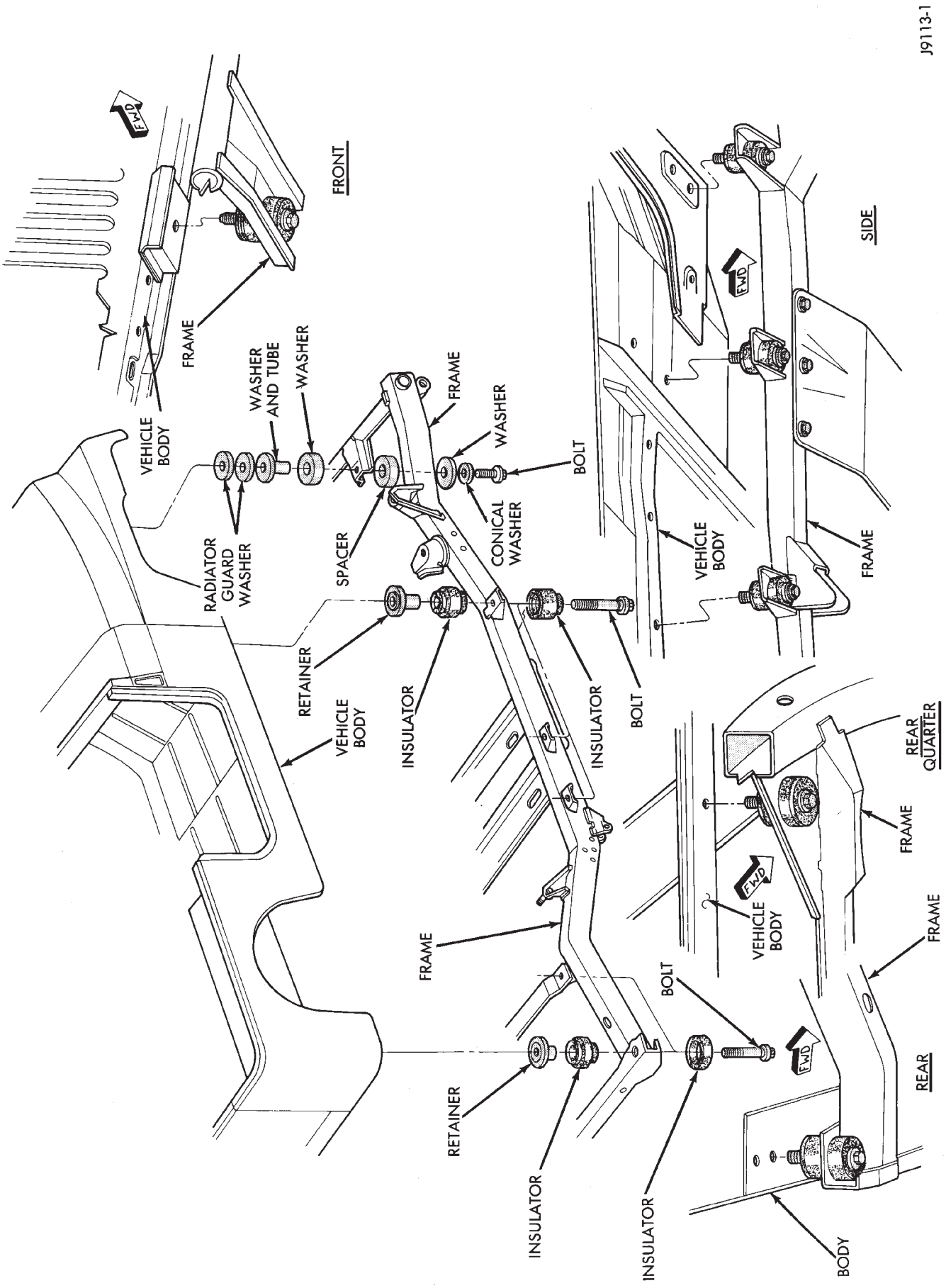

Fig. 2 YJ Body & Frame

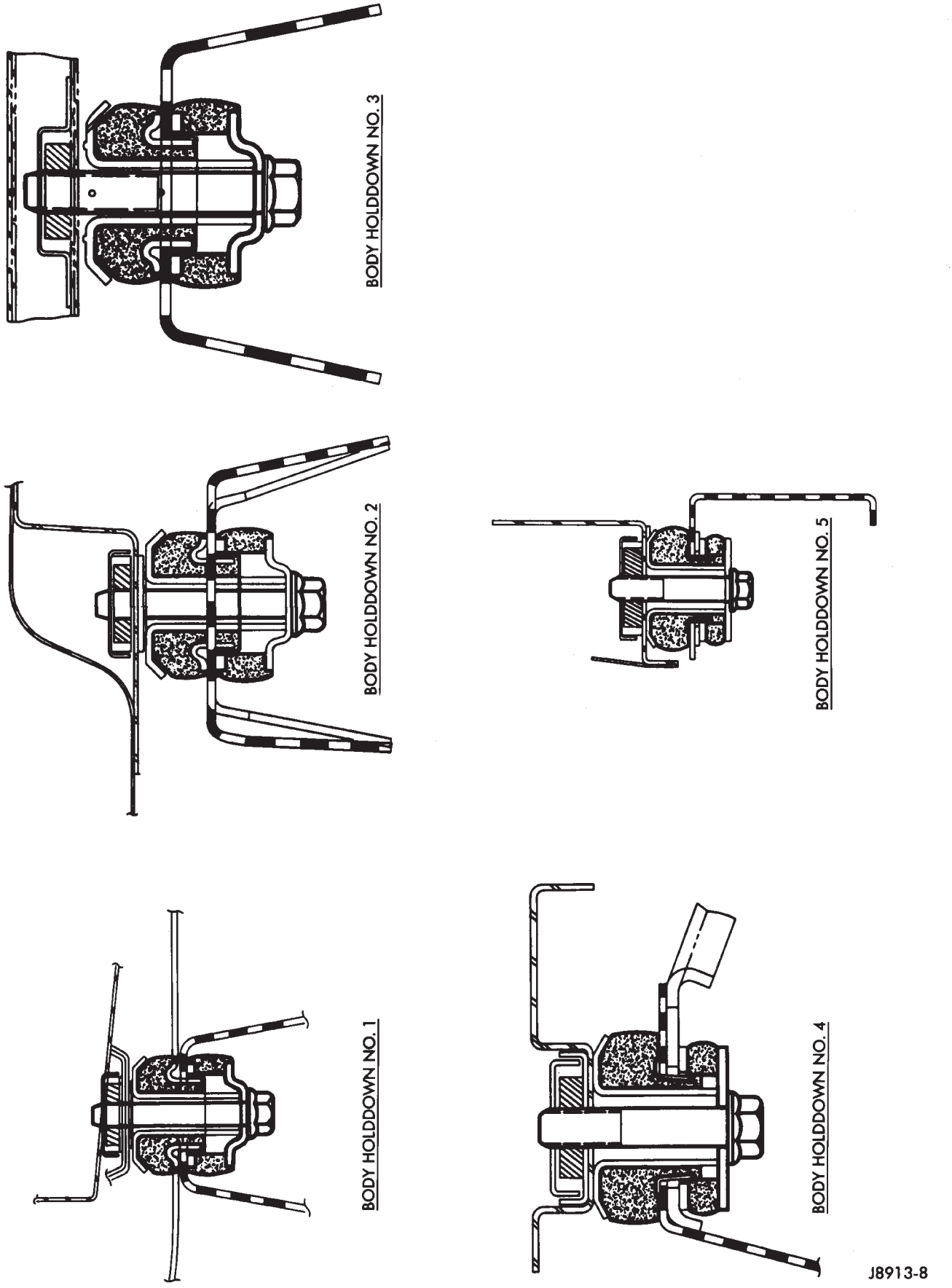

Fig. 3 Body HoldDowns—YJ Vehicles

The frame is constructed of high-strength channel steel siderails and crossmembers. The crossmembers join the siderails and retain them in alignment in relation to each other. This provides resistance to frame twists and strains.

FRAME STRAIGHTENING

When necessary, a conventional frame that is bent or twisted can be straightened by application of heat. The temperature must not exceed 566°C (1050°F). The use of a specially designed heat crayon can determine the desired temperature. Excessive heat will decrease the strength of the metal and result in a weakened frame.

Welding the joints around riveted cross members and frame side rails is not recommended.

A straightening repair process should be limited to frame members that are not severely damaged.

FRAME REPAIRS

DRILLING HOLES

Do not drill holes in frame side rail top and bottom flanges, metal fatigue can result causing frame failure. Holes drilled in the side of the frame rail must be at least 38 mm (1.5 in.) from the top and bottom flanges.

Additional drill holes should be located away from existing holes.

WELDING

Use MIG, TIG or arc welding equipment to repair welded frame components.

Frame components that have been damaged should be inspected for cracks before returning the vehicle to use. If cracks are found in accessible frame components perform the following procedures.

(1) Drill a hole at each end of the crack with a 3 mm (O.125 in.) diameter drill bit.

(2) Using a suitable die grinder with 3 inch cut off wheel, V-groove the crack to allow 100% weld penetration.

(3) Weld the crack.

(4) If necessary when a side rail is repaired, grind the weld smooth and install a reinforcement channel (Fig. 4) over the repaired area.

If a reinforcement channel is required, the top and bottom flanges should be 0.250 inches narrower than the side rail flanges. Weld only in the areas indicated (Fig. 4).

FRAME FASTENERS

Bolts, nuts and rivets can be used to repair frames or to install a reinforcement section on the frame. Bolts can be used in place of rivets. When replacing rivets with bolts, install the next larger size diameter bolt to assure proper fit. If necessary, drill the hole out just enough to receive the bolt.

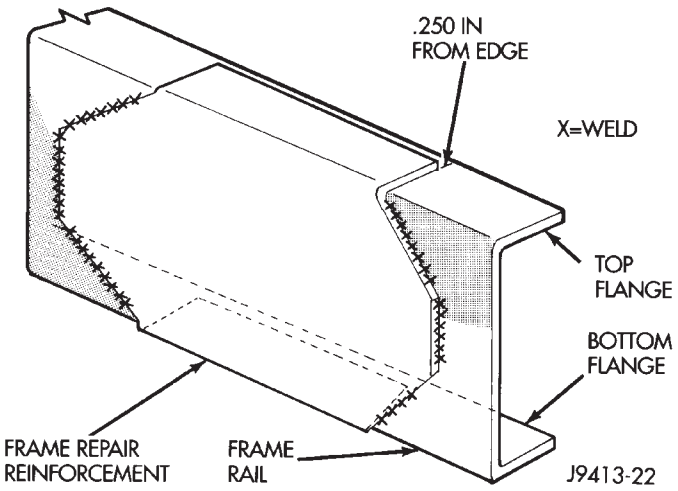

Fig. 4 Frame Reinforcement

Conical-type washers are preferred over the split-ring type lock washers. Normally, grade-5 bolts are adequate for frame repair. **Grade-3 bolts or softer should not be used.** Tightening bolts/nuts with the correct torque, refer to the Introduction Group at the front of this manual for tightening information.

FRAME DIMENSIONS

Frame dimensions are listed in millimeter scale. All dimensions are from center to center of Principal Locating Point (PLP), or from center to center of PLP and fastener location (Fig. 5).

TOW HOOKS

REMOVAL

(1) Remove the two bolts that attach the tow hook to the bumper rail and to the frame rail.

(2) Remove the tow hook.

INSTALLATION

(1) Position the tow hook on the bumper rail and frame rail.

(2) Install the attaching bolts. Tighten the bolts to 102 N·m (75 ft. lbs.) torque.

GENERATOR SPLASH SHIELD

REMOVAL

(1) Remove the shield retaining nut and washer (Fig. 6) from the engine oil pan stud (2.5L engines only).

(2) Pry the serrated retainers from the frame rail holes at each side of the vehicle.

(3) Pry the serrated retainers from the fan shroud holes (Fig. 6).

(4) Remove the shield from the vehicle.

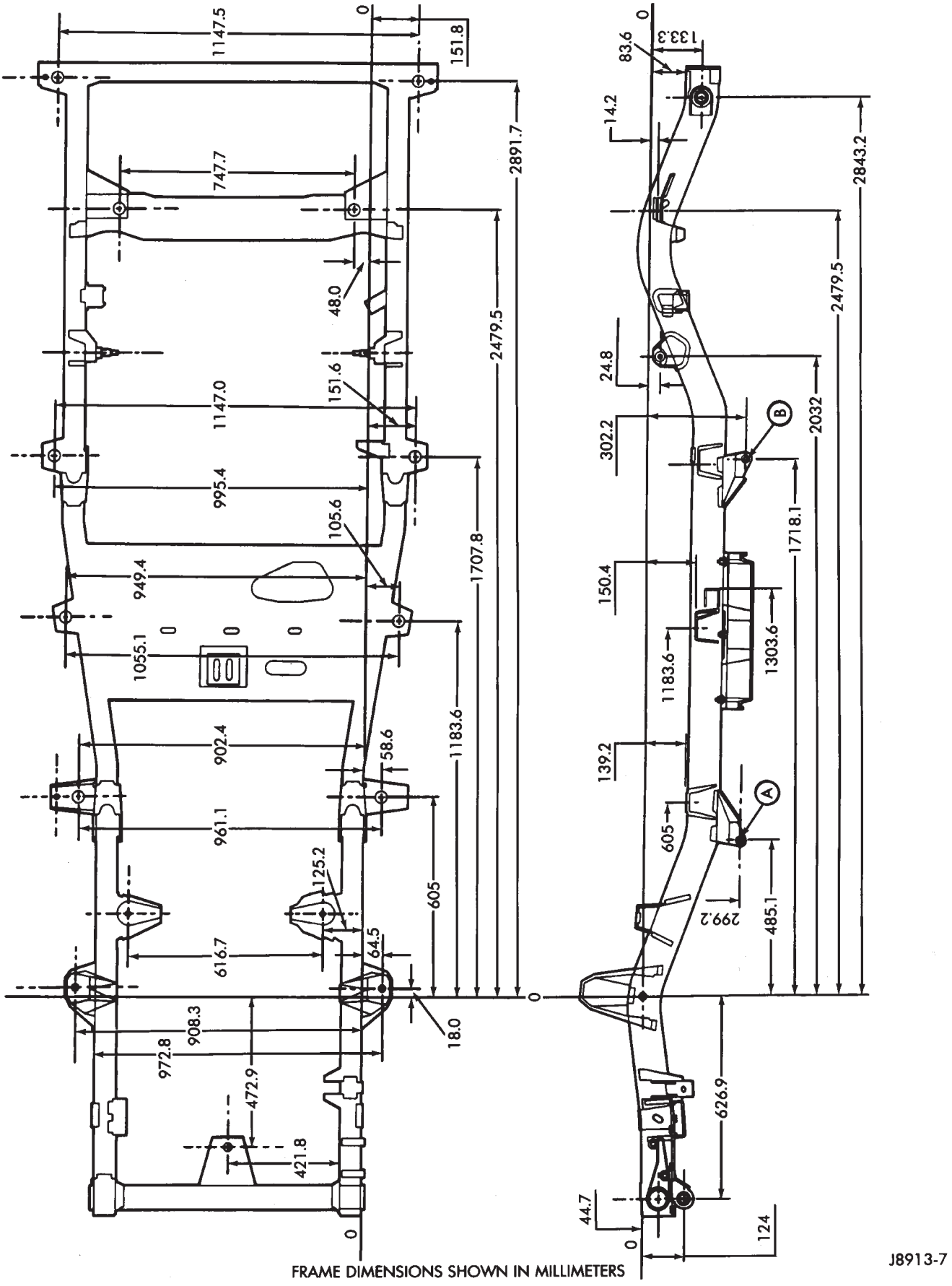

Fig. 5 Frame Alignment Dimensions—YJ Vehicles

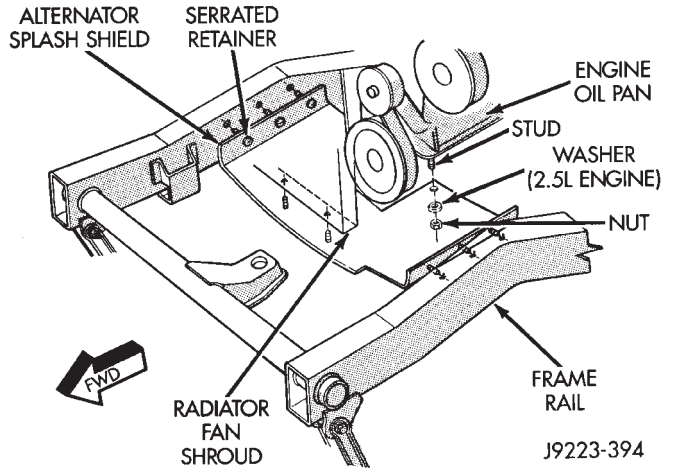

Fig. 6 Generator Splash Shield

INSTALLATION

(1) Position the generator splash shield at the fan shroud and frame rails.

(2) Force the serrated retainers into the fan shroud holes.

(3) Force the serrated retainers into the frame rail holes at each side of the vehicle.

TRANSFER CASE SKID PLATE

REMOVAL

(1) Raise and support the transmission.

(2) Remove the nuts that attach the transmission support cushion and torque bracket to the skid plate (Fig. 7).

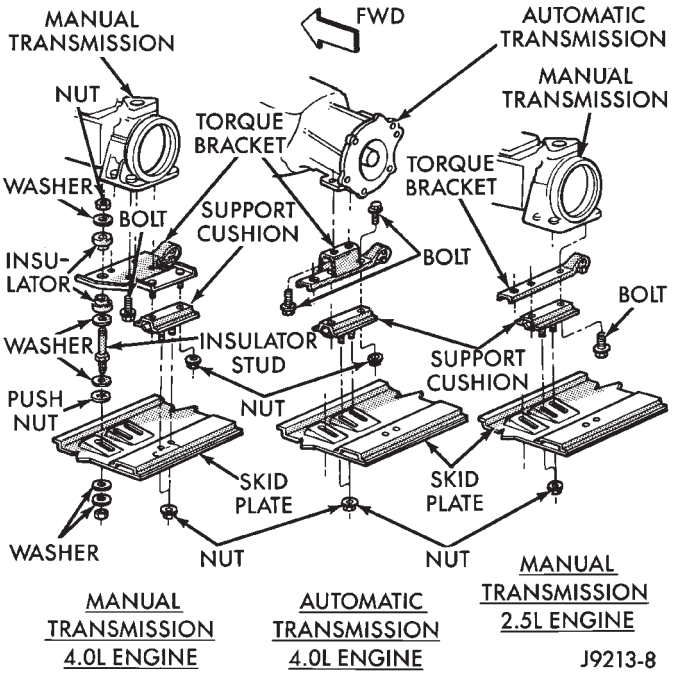

Fig. 7 Transfer Case Skid Plate

(3) Separate the transmission support cushion from the skid plate.

(4) Remove the nuts and bolts that attach the skid plate to the frame.

(5) Remove the skid plate from the vehicle.

INSTALLATION

(1) Position the skid plate at the frame and transmission support cushion.

(2) Attach the skid plate to the frame.

(3) Install the nuts that attach the transmission support cushion and torque bracket to the skid plate. Tighten the nuts to 56 N·m (41 ft. lbs.) torque.

(4) Remove the support and lower the transmission.

FUEL TANK SKID PLATE

REMOVAL

(1) Position a support under the fuel tank skid plate.

(2) Remove the nuts that attach the skid plate to the straps and to the crossmembers (Fig. 8).

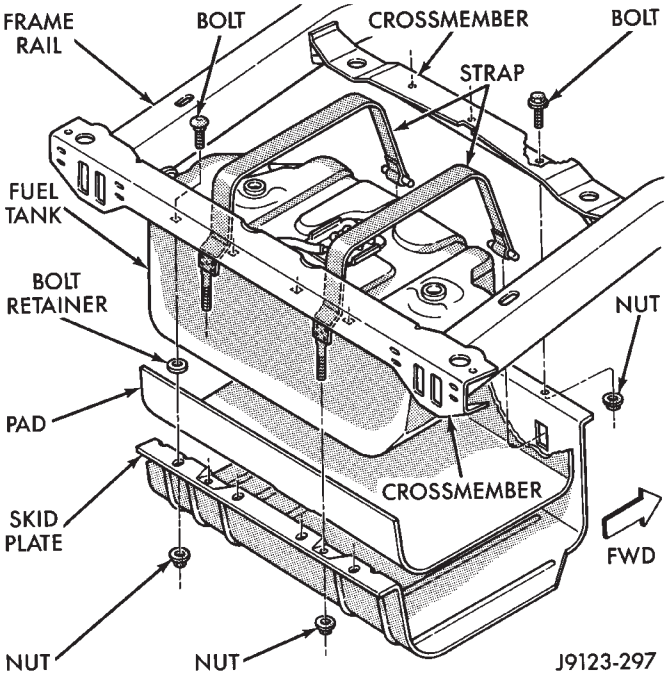

Fig. 8 Fuel Tank Skid Plate

(3) Separate the fuel tank strap from the skid plate.

(4) Support the fuel tank and remove the skid plate and the pad from the vehicle.

INSTALLATION

(1) Attach the skid plate to the fuel tank strap.

(2) Position and support the pad and skid plate under the fuel tank.

(3) Install the nuts to attach the skid plate to the straps and to the frame crossmembers. Tighten the fuel tank strap nuts to 5 N·m (40 in. lbs.) torque. Tighten the skid plate-to-crossmember nuts with 16 N·m (138 in. lbs.) torque.

(4) Remove the support from under the skid plate.

BUMPERS

INDEX

	page		page
Frame Crossmember Cover	16	Rear Bumper	16
Front Bumper	16	Service Information	16

SERVICE INFORMATION

In some cases, components in the following procedures either support, or are hidden by other components.

FRONT BUMPER

The YJ front bumper is a one-piece rail (Fig. 1). A front crossmember cover (Fig. 1) is also installed on all YJ vehicles.

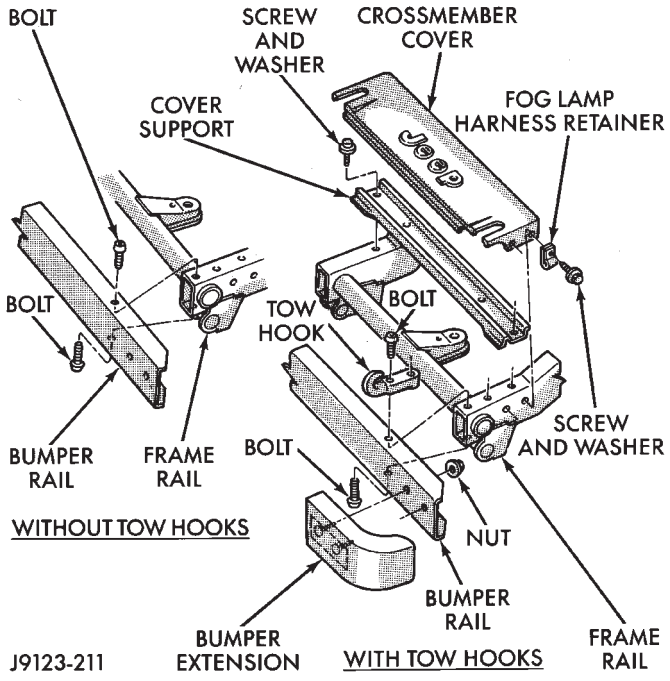

Fig. 1 Front Bumper Rail, Crossmember Cover & Tow Hooks

BUMPER REMOVAL

(1) Disconnect and remove the fog lamps, if equipped.

(2) Remove the nuts and bolts that retain the bumper extensions to the bumper rail and remove the extensions.

(3) Remove the nuts and bolts that attach the bumper rail/tow hooks to the frame rails.

(4) Separate the bumper rail from the frame rails.

BUMPER INSTALLATION

(1) Position the front bumper on the frame rails.

(2) Install the bolts and attach the front bumper rail (and tow hooks, if equipped) to the frame rails.

(3) Tighten the bolts to 102 N·m (75 ft. lbs.) torque.

(4) Position the bumper extensions on the bumper rail and install the retaining bolts.

(5) Tighten the bolts to 104 N·m (77 ft. lbs.) torque.

(6) Install the fog lamps, if equipped.

FRAME CROSSMEMBER COVER

REMOVAL

(1) Remove the screws that attach the crossmember cover and support to the frame rails.

(2) Remove the crossmember cover and support from the frame rails.

INSTALLATION

(1) Position the support and crossmember cover on the frame rails.

(2) Install the attaching screws.

(3) Tighten the screws to 8 N·m (72 in. lbs.) torque.

REAR BUMPER

When equipped with a spare tire carrier attached to the tailgate, a rear bumperette is attached to the frame (Fig. 2 and 3).

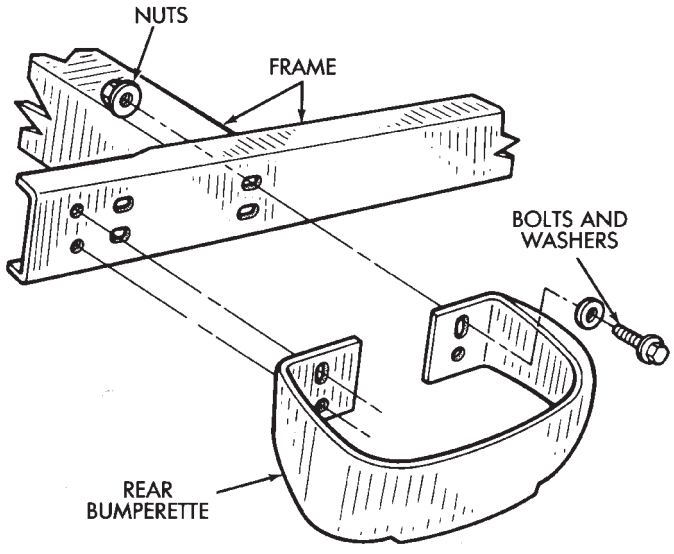

Fig. 2 Rear Bumperette

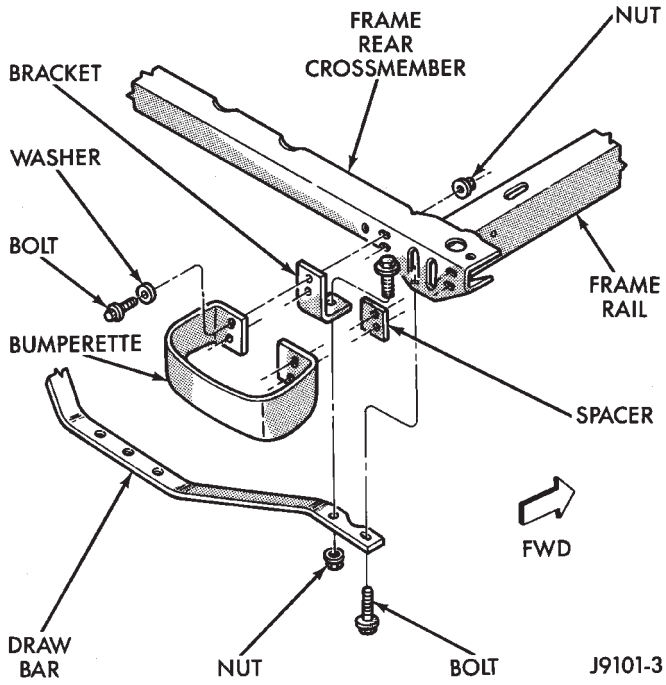

Fig. 3 Rear Bumperette & Draw Bar

BUMPERETTE AND DRAW BAR REMOVAL

(1) Remove the bumperette and draw bar retaining nuts, bolts and washers from the frame rear crossmember (Fig. 2 and 3).

(2) Remove the bumperettes, spacers, brackets and draw bar from the rear crossmember.

INSTALLATION

(1) Position the spacers, brackets, draw bar and bumperettes on the rear crossmember.

(2) Install the retaining nuts, bolts and washers in the frame rear crossmember. Tighten the retaining nuts and bolts with 3 N·m (30 in. lbs.) torque.

FUEL SYSTEM

CONTENTS

	page		page
ACCELERATOR PEDAL AND THROTTLE CABLE	17	OPERATION	19
FUEL DELIVERY SYSTEM	3	MULTI-PORT FUEL INJECTION (MFI)— COMPONENT REMOVAL/INSTALLATION	58
FUEL TANKS	13	MULTI-PORT FUEL INJECTION (MFI)— GENERAL DIAGNOSIS	35
GENERAL INFORMATION	1	SPECIFICATIONS	67
MULTI-PORT FUEL INJECTION (MFI)— COMPONENT DESCRIPTION/SYSTEM			

GENERAL INFORMATION

Throughout this group, references are made to particular vehicle models by alphabetical designation (XJ or YJ) or by the particular vehicle nameplate. A chart showing a breakdown of the alphabetical designations is included in the Introduction section at the beginning of this manual.

The **Fuel System** consists of: the fuel tank, an electric (fuel tank mounted) fuel pump and a fuel filter. It also consists of fuel tubes/lines/hoses, vacuum hoses, throttle body and fuel injectors.

The **Fuel Delivery System** consists of: the electric fuel pump, fuel filter, fuel tubes/lines/hoses, fuel rail, fuel injectors and fuel pressure regulator.

A **Fuel Return System** is used on all vehicles. The system consists of: the fuel tubes/lines/hoses that route fuel back to the fuel tank.

The **Fuel Tank Assembly** consists of: the fuel tank, filler tube, fuel fill and vent hoses, fuel gauge sending unit/electric fuel pump module, a pressure relief/rollover valve and a pressure-vacuum filler cap.

Also to be considered part of the fuel system is the **Evaporation Control System.** This is designed to reduce the emission of fuel vapors into the atmosphere. The description and function of the Evaporative Control System is found in Group 25, Emission Control Systems.

FUEL USAGE STATEMENT

Your vehicle was designed to meet all emission regulations and provide excellent fuel economy using high quality unleaded gasoline. Only use unleaded gasolines having a minimum posted octane of 87.

If your vehicle develops occasional light spark knock (ping) at low engine speeds, this is not harmful. However, **continued heavy knock at high speeds can cause damage and should be reported to your dealer immediately.** Engine damage as a result of heavy knock operation may not be covered by the new vehicle warranty.

In addition to using unleaded gasoline with the proper octane rating, **those that contain detergents, corrosion and stability additives are recommended.** Using gasolines that have these additives will help improve fuel economy, reduce emissions and maintain vehicle performance.

Poor quality gasoline can cause problems such as hard starting, stalling and stumble. If you experience these problems, use another brand of gasoline before considering service for the vehicle.

GASOLINE/OXYGENATE BLENDS

Some fuel suppliers blend unleaded gasoline with materials that contain oxygen such as alcohol, MTBE and ETBE. The type and amount of oxygenate used in the blend is important. The following are generally used in gasoline blends:

ETHANOL

Ethanol (Ethyl or Grain Alcohol) properly blended, is used as a mixture of 10 percent ethanol and 90 percent gasoline. **Gasoline with ethanol may be used in your vehicle.**

METHANOL

CAUTION: DO NOT USE GASOLINES CONTAINING METHANOL. Use of methanol/gasoline blends may result in starting and driveability problems. In addition, damage may be done to critical fuel system components.

Methanol (Methyl or Wood Alcohol) is used in a variety of concentrations blended with unleaded gaso-

line. You may encounter fuels containing 3 percent or more methanol along with other alcohols called cosolvents.

Problems that are the result of using methanol/gasoline blends are not the responsibility of Chrysler Corporation. They may not be covered by the vehicle warranty.

MTBE/ETBE

Gasoline and MTBE (Methyl Tertiary Butyl Ether) blends are a mixture of unleaded gasoline and up to 15 percent MTBE. Gasoline and ETBE (Ethyl Tertiary Butyl Ether) are blends of gasoline and up to 17 percent ETBE. Gasoline blended with MTBE or ETBE may be used in your vehicle.

CLEAN AIR GASOLINE

Many gasolines are now being blended that contribute to cleaner air, especially in those areas of the country where air pollution levels are high. These new blends provide a cleaner burning fuel and some are referred to as **Reformulated Gasoline.**

In areas of the country where carbon monoxide levels are high, gasolines are being treated with oxygenated materials such as MTBE, ETBE and ethanol.

Chrysler Corporation supports these efforts toward cleaner air and recommends that you use these gasolines as they become available.

FUEL DELIVERY SYSTEM

INDEX

	page
Fuel Filter	9
Fuel Pressure Leak Down Test	8
Fuel Pressure Release Procedure	6
Fuel Pump Capacity Test	7
Fuel Pump Electrical Control	5
Fuel Pump Module	3
Fuel System Pressure Test	6
Fuel Tubes/Lines/Hoses and Clamps	9
Quick-Connect Fittings	10

FUEL PUMP MODULE

The fuel pump module is installed in the top of the fuel tank. The fuel pump module contains the following components:

- Electric fuel pump
- Fuel pump reservoir
- In-tank fuel filter
- Fuel gauge sending unit
- Fuel supply and return tube connections

The fuel pump used on all vehicles is a turbine type pump. It is driven by a permanent magnet 12 volt electric motor that is immersed in the fuel tank. The electrical pump is integral with the fuel sender unit. The pump/sender assembly is installed inside the fuel tank.

The fuel pump has a check valve at the outlet end that consists of a ball held against a seat by force applied from a spring. When the pump is operating, fuel pressure overcomes spring pressure and forces the ball off its seat, allowing fuel to flow. When the pump is not operating, spring pressure forces the ball back against the seat preventing fuel backflow through the pump.

Fuel system pressure is maintained at approximately 214 kPa (31 psi). This is when the pump is operating and vacuum is supplied to the fuel pressure regulator. If vacuum is not supplied to the pressure regulator, fuel pressure will be approximately 55-69 kPa (8-10 psi) higher. This may be due to a broken or clogged vacuum line. When the fuel pump is not operating, fuel system pressure of 131-269 kPa (19-39 psi) is maintained for approximately 2 to 6 hours. This is done by the fuel pump outlet check valve and the vacuum assisted fuel pressure regulator.

REMOVAL—XJ MODELS

The fuel pump/gauge sender unit assembly can be removed from the fuel tank without removing the tank from the vehicle.

WARNING: THE FUEL SYSTEM IS UNDER A CONSTANT PRESSURE (EVEN WITH THE ENGINE OFF). BEFORE SERVICING THE FUEL PUMP MODULE, THE FUEL SYSTEM PRESSURE MUST BE RELEASED. REFER TO THE FUEL PRESSURE RELEASE PROCEDURE IN THIS GROUP.

WARNING: EXTINGUISH ALL TOBACCO SMOKING PRODUCTS BEFORE SERVICING THE FUEL SYSTEM. KEEP OPEN FLAME AWAY FROM FUEL SYSTEM COMPONENTS.

(1) Remove fuel filler cap. Perform the Fuel Pressure Release Procedure as outlined in this group.

(2) Disconnect negative battery cable.

(3) Using an approved portable gasoline siphon/storage tank, drain fuel tank until fuel level is below one quarter (1/4) full.

(4) Raise and support vehicle.

WARNING: WRAP SHOP TOWELS AROUND FUEL HOSES TO ABSORB ANY FUEL SPILLAGE DURING FUEL TANK REMOVAL.

(5) Disconnect fuel vent supply and return tubes from fittings on fuel pump module.

(6) Disconnect fuel pump module electrical harness connector from main harness.

(7) Using a brass punch and hammer, remove fuel pump module lock ring by carefully tapping it counterclockwise (Fig. 1).

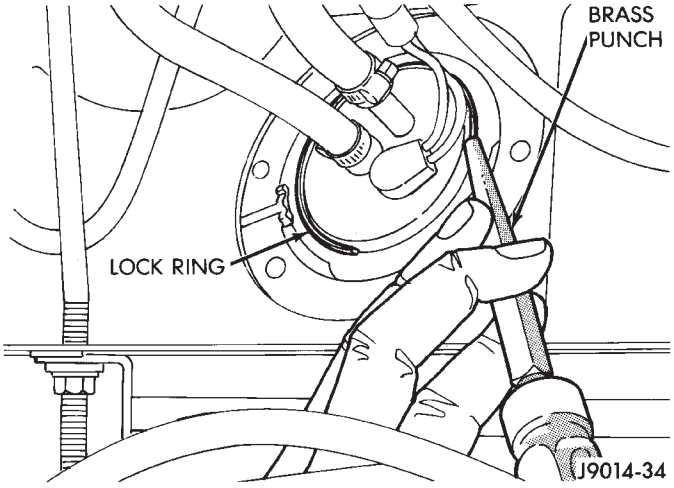

Fig. 1 Removing Lock Ring—XJ Models—Typical

(8) Remove fuel pump module and O-ring seal. Discard old O-ring and fuel pump module inlet filter.

DISASSEMBLY—XJ MODELS

(1) Remove and discard fuel pump inlet filter.

The wire terminals to the fuel pump motor are different in size and cannot be connected to the wrong terminal.

(2) Disconnect fuel pump terminal wires.

(3) Remove fuel pump outlet hose and clamp. Replace the hose if it shows any signs of fatigue or failure.

(4) Remove fuel pump top mounting bracket nut. Remove fuel pump (Fig. 2).

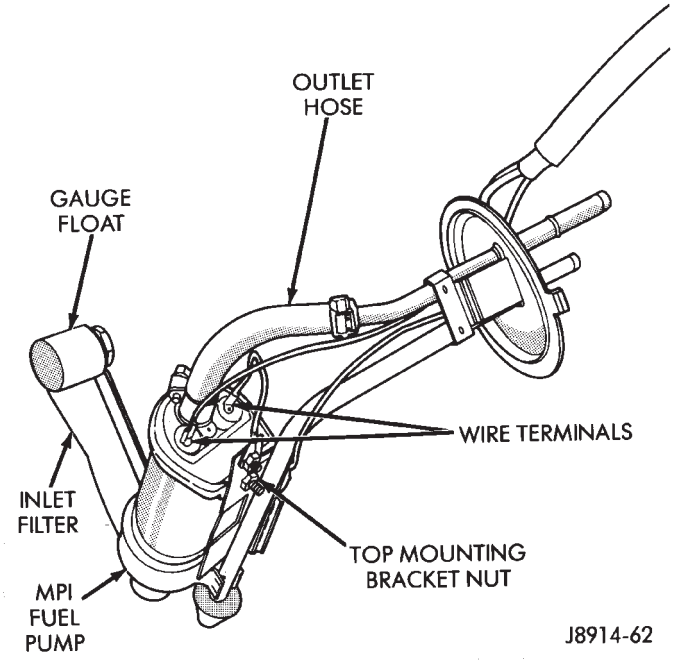

Fig. 2 Fuel Pump Module—XJ Models—Disassemble/Assemble

ASSEMBLY—XJ MODELS

Whenever the fuel pump is replaced, the fuel pump inlet filter (sock) must also be replaced.

(1) Place fuel pump top mounting bracket over top of pump.

(2) Position fuel pump into lower bracket. Slide stud of top bracket through hole in fuel pump side bracket. Tighten fuel pump top mounting nut.

(3) Install new fuel pump outlet hose. Secure with new clamps.

(4) Connect wire terminals to motor.

(5) Install new fuel pump inlet filter.

INSTALLATION—XJ MODELS

Whenever the fuel pump is replaced, the fuel pump inlet filter must also be replaced.

(1) Install new fuel pump inlet filter onto fuel pump.

(2) Install fuel pump module assembly and new O-ring seal. The rubber stopper on the end of the fuel return tube of the assembly must be inserted into the cup in the fuel tank reservoir (Fig. 3).

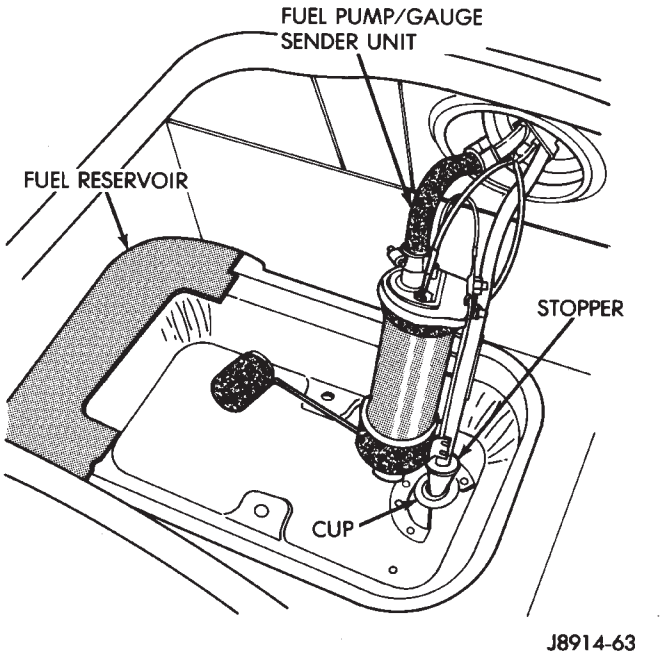

Fig. 3 Fuel Pump Module—XJ Models—Installation

(3) Using a brass punch and a hammer, install lock ring. Carefully tap lock ring clockwise until it seats against stop on fuel tank.

(4) Connect fuel supply and return hoses to fittings on fuel pump module. Tighten hose clamps.

(5) Connect fuel pump module electrical harness connector to main harness connector.

(6) Lower vehicle.

(7) Fill fuel tank. Install fuel tank cap.

(8) Connect negative battery cable.

(9) Start vehicle and inspect for leaks.

REMOVAL—YJ MODELS

The fuel tank must be removed to remove the fuel pump module.

WARNING: THE FUEL SYSTEM IS UNDER A CONSTANT PRESSURE (EVEN WITH THE ENGINE OFF). BEFORE SERVICING THE FUEL PUMP MODULE, THE FUEL SYSTEM PRESSURE MUST BE RELEASED. REFER TO THE FUEL PRESSURE RELEASE PROCEDURE IN THIS GROUP.

WARNING: EXTINGUISH ALL TOBACCO SMOKING PRODUCTS BEFORE SERVICING THE FUEL SYSTEM. KEEP OPEN FLAME AWAY FROM FUEL SYSTEM COMPONENTS.

(1) Remove negative battery cable.

(2) Remove fuel filler cap. Perform the Fuel Pressure Release Procedure as outlined in this group.

(3) Remove fuel tank. Refer to Fuel Tank Removal—YJ Models.

(4) Remove fuel pump module assembly.

(5) Remove mounting screws. Lift assembly and gasket out of fuel tank. Discard old gasket (Fig. 4).

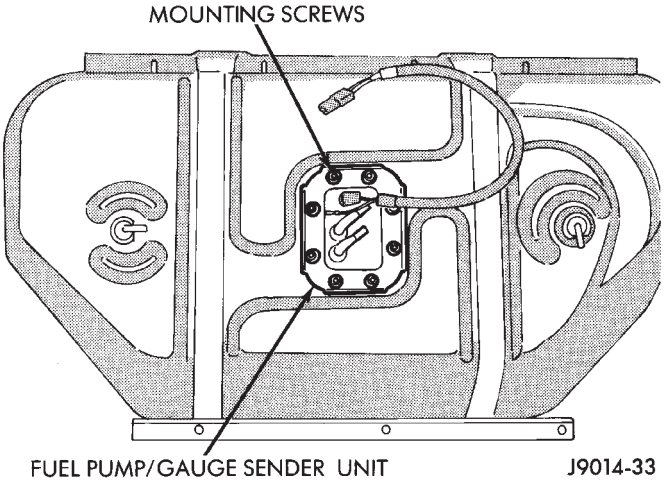

Fig. 4 Fuel Pump Module—Remove/Install—YJ Models

(6) Remove and discard fuel pump inlet filter.

DISASSEMBLY—YJ MODELS

(1) Remove and discard fuel pump inlet filter (Fig. 5).

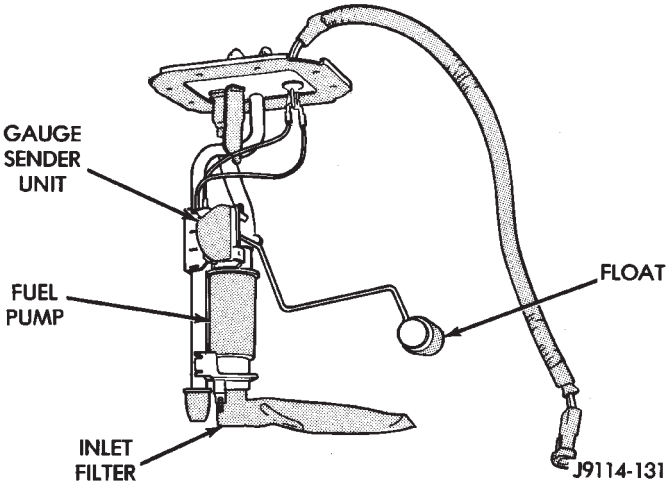

Fig. 5 Fuel Pump Module—YJ Models

The wire terminals to the fuel pump motor are different in size and cannot be connected to the wrong terminal.

(2) Disconnect fuel pump terminal wires from pump.

(3) Remove fuel pump outlet hose and clamp (Fig. 6). Replace the hose if it shows any signs of fatigue or failure.

(4) Remove fuel pump top mounting bracket nut (Fig. 6). Remove fuel pump.

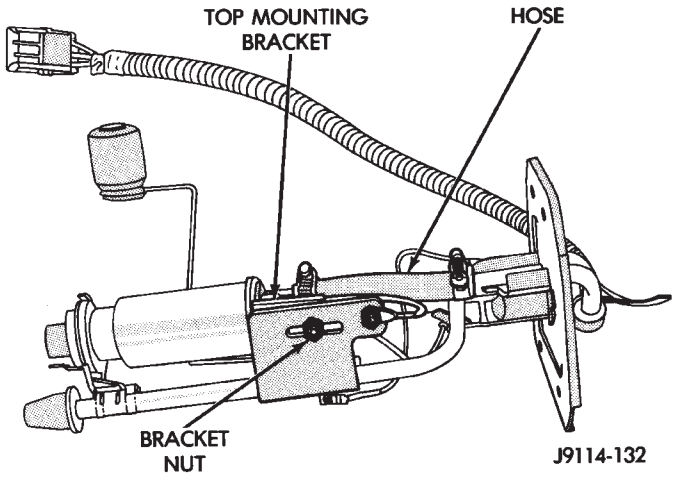

Fig. 6 Fuel Pump Removal/Installation—YJ Models

ASSEMBLY—YJ MODELS

Whenever the fuel pump is replaced, the fuel pump inlet filter (sock) must also be replaced.

(1) Place fuel pump top mounting bracket over top of pump.

(2) Position fuel pump into lower bracket. Slide stud of top bracket through hole in fuel pump side bracket. Tighten fuel pump top mounting nut.

(3) Install new fuel pump outlet hose. Secure with new clamps.

(4) Connect wire terminals to motor.

(5) Install new fuel pump inlet filter.

INSTALLATION—YJ MODELS

(1) Install a new fuel pump inlet filter.

(2) Install fuel pump module assembly with a new gasket between the assembly and tank. Tighten mounting screws to 2 N·m (18 in. lbs.) torque.

(3) Install fuel tank. Refer to Fuel Tank Installation—YJ Models.

(4) Fill fuel tank. Install fuel tank cap.

(5) Install negative battery cable.

(6) Start vehicle and check for leaks.

FUEL PUMP ELECTRICAL CONTROL

For an electrical operational description of the fuel pump, refer to the MFI System—Component Description/System Operation section of this group. See Automatic Shutdown (ASD) Relay—PCM Output.

For the 1995 model year, the ballast resistor and ballast resistor bypass relay are no longer used to control the fuel pump circuit.

FUEL PRESSURE RELEASE PROCEDURE

WARNING: THE FUEL SYSTEM IS UNDER CONSTANT FUEL PRESSURE (EVEN WITH THE ENGINE OFF) OF APPROXIMATELY 131-269 KPA (19-39 PSI). THIS PRESSURE MUST BE RELEASED BEFORE SERVICING ANY FUEL SUPPLY OR FUEL RETURN SYSTEM COMPONENT.

(1) Disconnect negative battery cable.
(2) Remove fuel tank filler neck cap to release fuel tank pressure.

WARNING: DO NOT ALLOW FUEL TO SPILL ONTO THE ENGINE INTAKE OR EXHAUST MANIFOLDS. PLACE SHOP TOWELS UNDER AND AROUND THE PRESSURE PORT TO ABSORB FUEL WHEN THE PRESSURE IS RELEASED FROM THE FUEL RAIL.

WARNING: WEAR PROPER EYE PROTECTION WHEN RELEASING FUEL SYSTEM PRESSURE.

(3) Remove protective cap from pressure test port on the fuel rail (Fig. 7).

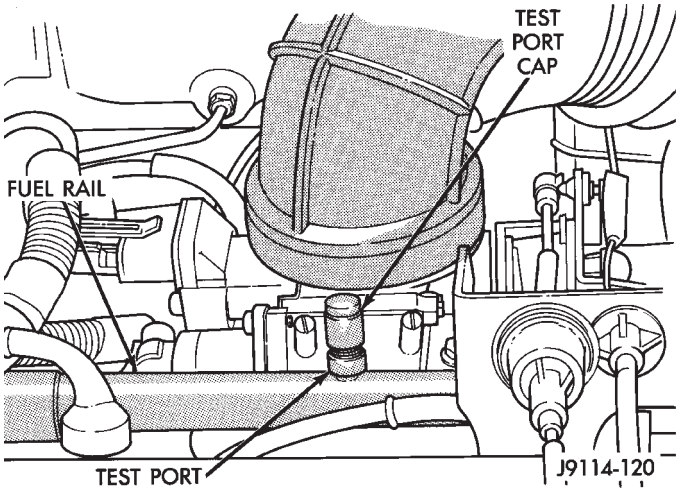

Fig. 7 Pressure Test Port—Typical

(4) Obtain the fuel pressure gauge/hose assembly from fuel pressure gauge tool set 5069. Remove the gauge from the hose.
(5) Place one end of hose (gauge end) into an approved gasoline container.
(6) Place a shop towel under the test port.
(7) To release fuel pressure, screw the other end of hose onto the fuel pressure test port.
(8) After fuel pressure has been released, remove the hose from the test port.
(9) Install protective cap to fuel test port.

FUEL SYSTEM PRESSURE TEST

The fuel system is equipped with a vacuum assisted fuel pressure regulator (Fig. 8). With engine at idle speed, system fuel pressure should be approximately 214 kPa (31 psi) with the vacuum line connected to the regulator. With the vacuum line disconnected from the regulator, fuel pressure should be approximately 269 kPa (39 psi). This is 55-69 kPa (8-10 psi) higher.

(1) Remove the protective cap at the fuel rail (Fig. 7). Connect the 0-414 kPa (0-60 psi) fuel pressure gauge (from Gauge Set 5069) to test port pressure fitting on fuel rail (Fig. 9).

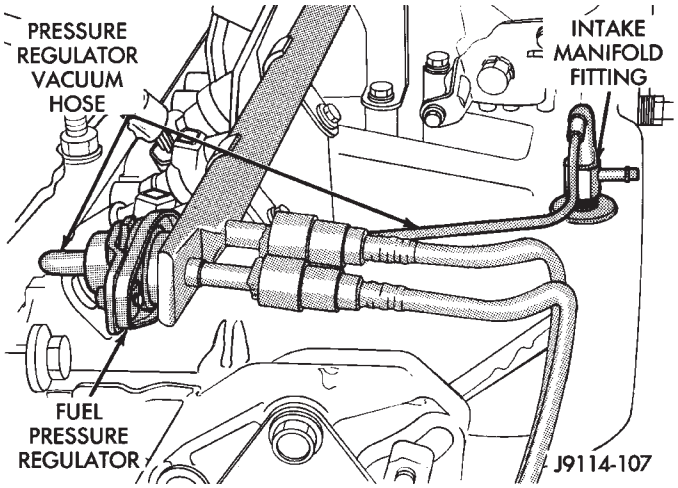

Fig. 8 Fuel Pressure Regulator—Typical

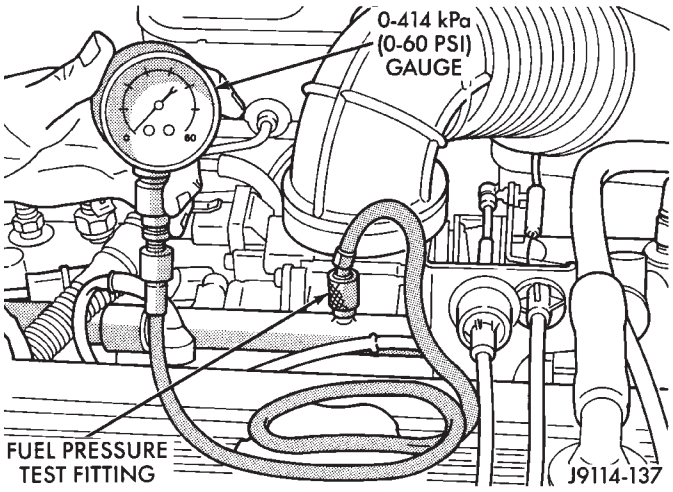

Fig. 9 Fuel Pressure Test Connection—Typical

(2) Note pressure gauge reading. Fuel pressure should be approximately 214 kPa (31 psi) at idle.
(3) Disconnect vacuum line (hose) at fuel pressure regulator (Fig. 8). Note gauge reading. With vacuum line disconnected, fuel pressure should rise to approximately 269 kPa (39 psi).

Fuel pressure should be approximately 55-69 kPa (8-10 psi) higher with vacuum line removed from regulator. If not, inspect pressure regulator vacuum line for leaks, kinks or blockage. If vacuum line checks

OK and fuel pressure does not rise approximately 8-10 psi after disconnecting vacuum line, replace fuel pressure regulator.

The fuel pressure regulator is **not adjustable.**

(4) If fuel pressure exceeds 45 psi, check fuel return line/tube for kinks or obstructions.

If the previous tests checked good, fuel pump pressure is correct. If pump pressure was low, proceed as follows:

(5) Release fuel system pressure. Refer to the previous Fuel Pressure Release Procedure in this group.

(6) Disconnect the 5/16 inch fuel return line quick-connect fitting at fuel rail. For procedures, refer to Fuel Tubes/Lines/Hoses and Clamps. Also refer to Quick-Connect Fittings. These can be found in the Fuel Delivery System section of this group.

(7) Connect Fuel Line Pressure Test Adapter Tool number 6539 (5/16 in.) between the disconnected fuel return line and fuel rail (Fig. 10).

(8) Connect a 0-689 kPa (100 psi) pressure gauge to Adapter Tool 6539.

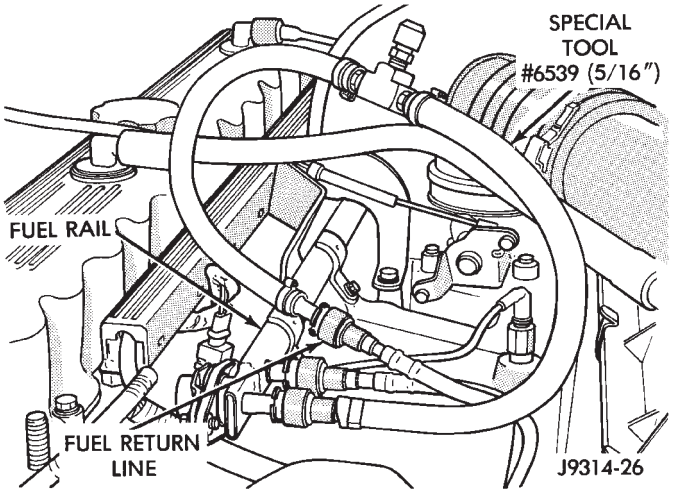

Fig. 10 Adapter Tool—Typical Connection

WARNING: THE FUEL SYSTEM PRESSURE IN THE FOLLOWING TEST MAY EXCEED 100 PSI. BEFORE STARTING TEST, VERIFY GOOD CONNECTIONS AT ENDS OF ADAPTER TOOL 6539. BE SURE TOOL IS LOCKED ONTO FUEL RAIL AND FUEL RETURN LINE. PULL FIRMLY ON ENDS OF TOOL TO VERIFY.

(9) To activate the fuel pump and pressurize the system, obtain the DRB scan tool. Refer to the appropriate Powertrain Diagnostic Procedures service manual for DRB operation.

(10) **MOMENTARILY** pinch the rubber hose portion of adapter tool 6539. Pressure should rise to approximately 75 psi within two (2) seconds. **DO NOT** pinch hose for longer than three seconds.

If fuel pump pressure rises to approximately 75 psi within two seconds, pressure is operating at its maximum and is correct.

If fuel pump pressure does not rise to approximately 75 psi within two seconds, proceed as follows:

(11) Release fuel system pressure. Refer to the previous Fuel Pressure Release Procedure in this group.

(12) Raise and support vehicle.

(13) Disconnect fuel supply line at inlet (fuel tank side) of fuel filter. Connect Fuel Line Pressure Test Adapter Tool number 6631 (3/8 in.) between fuel filter and fuel supply line.

WARNING: THE FUEL SYSTEM PRESSURE IN THE FOLLOWING TEST MAY EXCEED 100 PSI. BEFORE STARTING TEST, VERIFY GOOD CONNECTIONS AT ENDS OF ADAPTER TOOL 6631. BE SURE TOOL IS LOCKED ONTO FUEL FILTER AND FUEL SUPPLY LINE. PULL FIRMLY ON ENDS OF TOOL TO VERIFY.

(14) To activate the fuel pump and pressurize the system, obtain the DRB scan tool. Refer to the appropriate Powertrain Diagnostic Procedures service manual for DRB operation.

MOMENTARILY pinch the rubber hose portion of adapter tool 6631. Pressure should rise to approximately 75 psi within two (2) seconds. **DO NOT** pinch hose for longer than three seconds.

If fuel pump pressure now rises to approximately 75 psi within two seconds, but this pressure could not be met at the fuel rail, check for a plugged or restricted fuel filter. Also check the fuel supply line between fuel filter and fuel rail for kinks or obstructions. Proceed to the following Fuel Pump Capacity Test.

FUEL PUMP CAPACITY TEST

Before performing this test, verify fuel pump pressure by performing the previous tests.

(1) Release the fuel system pressure from fuel system. Refer to the previous Fuel Pressure Release Procedure in this group.

(2) Disconnect the fuel supply line at fuel rail near pressure regulator. For procedures, refer to Fuel Tubes/Lines/Hoses and Clamps. Also refer to Quick-Connect Fittings. These can be found in the Fuel Delivery System section of this group.

(3) Connect Fuel Line Pressure Test Adapter Tool number 6631 (3/8 in.) into the disconnected fuel supply line. Insert the other end of tool 6631 into an approved gasoline container.

(4) To activate the fuel pump and pressurize the system, obtain the DRB scan tool. Refer to the appropriate Powertrain Diagnostic Procedures service manual for DRB operation.

A good fuel pump will deliver at least 1 liter of fuel per minute.

FUEL PRESSURE LEAK DOWN TEST

ENGINE OFF

Abnormally long periods of cranking to restart a hot engine that has been shut down for a short period of time may be caused by:

- Fuel pressure bleeding past the fuel pressure regulator.
- Fuel pressure bleeding past the check valve in the outlet end of the fuel tank mounted fuel pump.
- Fuel pressure bleeding past a fuel injector(s)

(1) Remove protective cap at fuel rail test port (Fig. 11). With the engine off, connect the 0-414 kPa (0-60 psi) fuel pressure gauge to the pressure test port fitting on the fuel rail. The fitting on the pressure tester must be in good condition and free of any leaks before performing this test.

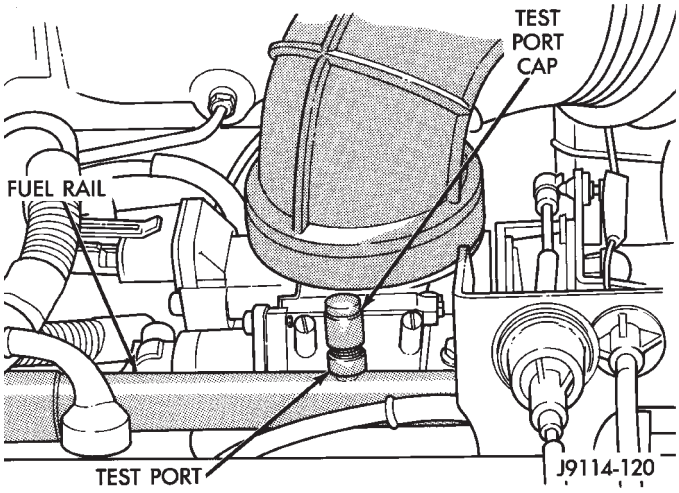

Fig. 11 Fuel Pressure Test Port—Typical

(2) Start the vehicle and let engine idle. Check fuel pressure reading on gauge. Fuel pressure should be within specifications. Refer to the previous Fuel System Pressure Tests.

(3) Shut engine off. Observe and record fuel pressure reading on gauge. Leave fuel pressure gauge connected. Allow engine to set for 30 minutes and then compare the fuel pressure reading on the gauge with the reading taken when engine was shut down. A pressure drop of up to 138 kPa (20 psi) within 30 minutes is within specifications.

(4) If the fuel pressure drop is within specifications, the fuel pump outlet check valve and fuel pressure regulator are both operating normally.

(5) If fuel pressure drop is greater than 138 kPa (20 psi), it must be determined if this drop is being caused by (in-tank mounted) fuel pump outlet check valve or fuel pressure regulator. Proceed to next step.

(6) Release the fuel system pressure from fuel system. Refer to the previous Fuel Pressure Release Procedure in this group.

(7) Disconnect both fuel lines at fuel rail near fuel pressure regulator. For procedures, refer to Fuel Tubes/Lines/Hoses and Clamps. Also refer to Quick-Connect Fittings. These can be found in the Fuel Delivery System section of this group.

(8) Connect Fuel Line Pressure Test Adapter Tool number 6631 (3/8 in.) between the disconnected fuel supply line and fuel rail (Fig. 12).

(9) Connect Fuel Line Pressure Test Adapter Tool number 6539 (5/16 in.) between the disconnected fuel return line and fuel rail (Fig. 12).

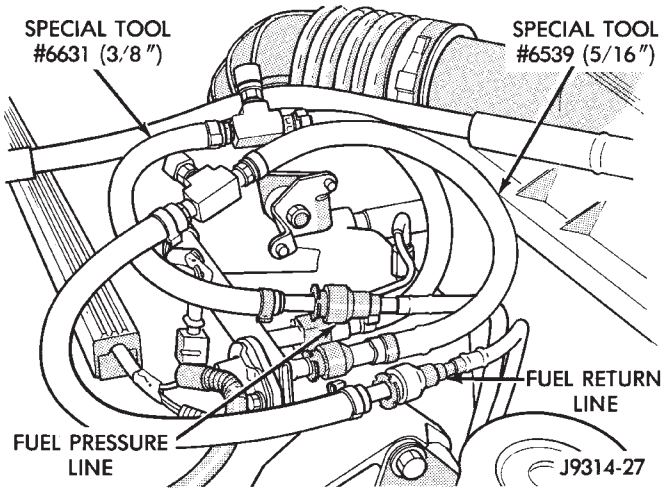

Fig. 12 Adapter Tools—Typical Connections

(10) Start engine. Observe and record fuel system pressure.

(11) Shut engine off.

(12) Clamp off the rubber hose portion of adapter tool number 6539 connected to the fuel return line. Allow engine to set for 30 minutes. If pressure has dropped more than 138 kPa (20 psi) in 30 minutes, pressure is bleeding past the (in-tank mounted) fuel pump outlet check valve. Replace Fuel Pump Module assembly. Refer to Fuel Pump Module removal and installation in this group. If pressure drop is within specifications, proceed to next step.

(13) Clamp off the rubber hose portion of adapter tool number 6631 connected to the fuel supply line. Allow engine to set for 30 minutes. If pressure has dropped more than 138 kPa (20 psi) in 30 minutes, pressure is bleeding past the fuel pressure regulator. Replace fuel pressure regulator. Refer to Fuel Rail removal and installation in the Component Removal/ Installation section of this group.

MECHANICAL MALFUNCTIONS

Mechanical malfunctions are more difficult to diagnose with this system. The powertrain control module (PCM) has been programmed to compensate for some mechanical malfunctions such as incorrect cam timing, vacuum leaks, etc. If engine performance problems are encountered and diagnostic trouble

codes are not displayed, the problem may be mechanical rather than electronic.

FUEL FILTER

The fuel filter protects the fuel injectors and fuel pressure regulator from dirt, water and other foreign matter. The filter is located under the vehicle along the frame rail (Figs. 13 or 14). Replace fuel filter at intervals specified in the Lubrication and Maintenance Schedule chart found in Group 0, Lubrication and Maintenance.

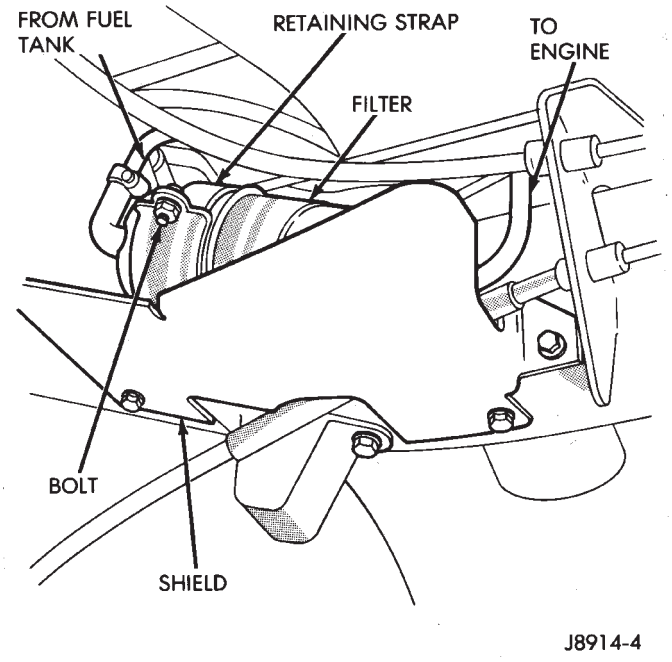

Fig. 13 Fuel Filter and Shield—YJ Models

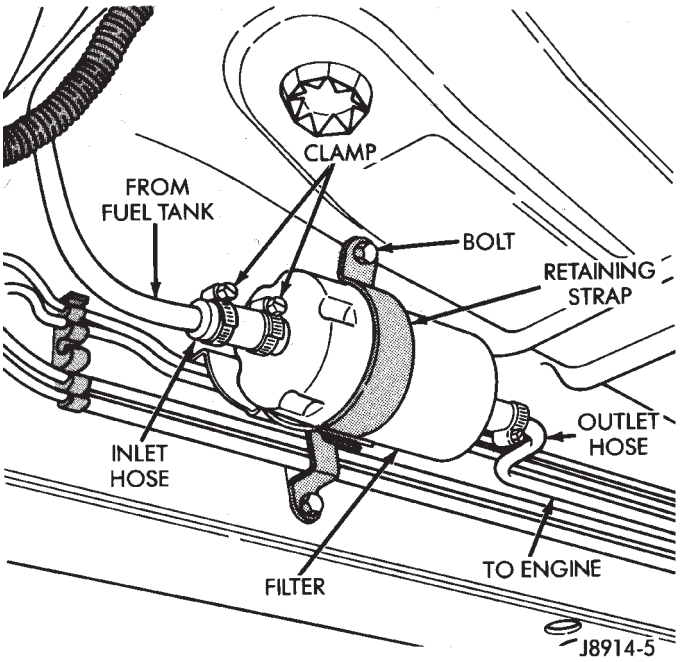

Fig. 14 Fuel Filter—XJ Models

REMOVAL

WARNING: THE FUEL SYSTEM IS UNDER CONSTANT FUEL PRESSURE (EVEN WITH THE ENGINE OFF) OF APPROXIMATELY 131-269 KPA (19-39 PSI). THIS PRESSURE MUST BE RELEASED BEFORE SERVICING THE FUEL FILTER.

(1) Disconnect negative battery cable. Remove fuel filler cap.

WARNING: FUEL PRESSURE MUST BE RELEASED BEFORE DISCONNECTING ANY FUEL SYSTEM COMPONENT.

(2) Release fuel system pressure. Refer to Fuel Pressure Release Procedure in this group.
(3) Raise and support vehicle.
(4) On YJ models remove the fuel filter shield (Fig. 13).
(5) Remove hoses and clamps from inlet and outlet sides of filter (Figs. 13 or 14). For procedures, refer to Fuel Tubes/Lines/Hoses and Clamps. Also refer to Quick-Connect Fittings. These can be found in the Fuel Delivery System section of this group.
(6) Remove retaining strap bolt.
(7) Remove filter from vehicle.

INSTALLATION

CAUTION: The ends of the fuel filter are marked for correct installation. Install filter with the end marked IN towards fuel tank and the end marked OUT towards engine.

(1) Place fuel filter in retaining strap with the marked ends in the correct position.
(2) Install retaining strap bolt and tighten to 12 N·m (106 in. lbs.) torque.
(3) Install inlet and outlet hoses and hose clamps. For procedures, refer to Fuel Tubes/Lines/Hoses and Clamps. Also refer to Quick-Connect Fittings. These can be found in the Fuel Delivery System section of this group.
(4) On YJ models, install fuel filter shield (Fig. 13).
(5) Lower vehicle.
(6) Connect negative battery cable.
(7) Start engine and check for leaks.

FUEL TUBES/LINES/HOSES AND CLAMPS

Also refer to the proceeding section on Quick-Connect Fittings.

WARNING: THE FUEL SYSTEM IS UNDER A CONSTANT PRESSURE (EVEN WITH THE ENGINE OFF). BEFORE SERVICING ANY FUEL SYSTEM HOSES, FITTINGS OR LINES, THE FUEL SYSTEM PRESSURE MUST BE RELEASED. REFER TO THE FUEL PRESSURE RELEASE PROCEDURE IN THIS GROUP.

Inspect all hose connections such as clamps, couplings and fittings to make sure they are secure and leaks are not present. The component should be replaced immediately if there is any evidence of degradation that could result in failure.

Never attempt to repair a plastic fuel line/tube. Replace as necessary.

Avoid contact of any fuel tubes/hoses with other vehicle components that could cause abrasions or scuffing. Be sure that the plastic fuel lines/tubes are properly routed to prevent pinching and to avoid heat sources.

The lines/tubes/hoses used on fuel injected vehicles are of a special construction. This is due to the higher fuel pressures and the possibility of contaminated fuel in this system. If it is necessary to replace these lines/tubes/hoses, only those marked EFM/EFI may be used.

The hose clamps used to secure rubber hoses on fuel injected vehicles are of a special rolled edge construction. This construction is used to prevent the edge of the clamp from cutting into the hose. Only these rolled edge type clamps may be used in this system. All other types of clamps may cut into the hoses and cause high-pressure fuel leaks.

Use new original equipment type hose clamps. Tighten hose clamps to 1 N·m (15 in. lbs.) torque.

QUICK-CONNECT FITTINGS

Also refer to the previous Fuel Tubes/Lines/Hoses and Clamps section.

Different types of quick-connect fittings are used to attach various fuel system components. These are: a single-tab type, a two-tab type or a plastic retainer ring type.

SINGLE-TAB TYPE

This type of fitting is equipped with a single pull tab (Fig. 15). The tab is removable. After the tab is removed, the quick-connect fitting can be separated from the fuel system component.

CAUTION: The interior components (O-rings, spacers) of this type of quick-connect fitting are not serviced separately, but new pull tabs are available. Do not attempt to repair damaged fittings or fuel lines/tubes. If repair is necessary, replace the complete fuel tube assembly.

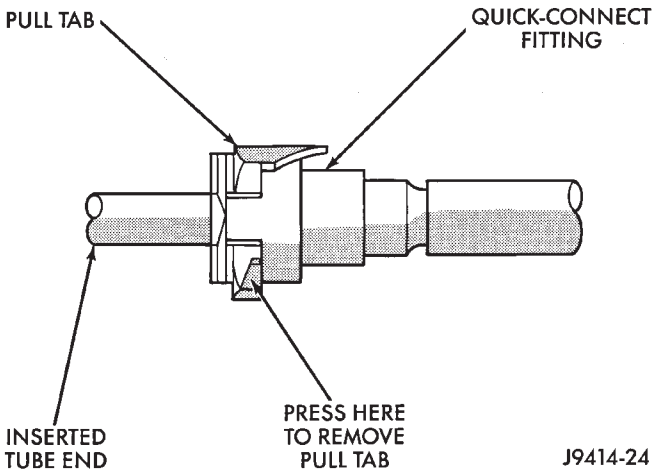

Fig. 15 Single-Tab Type Fitting

WARNING: THE FUEL SYSTEM IS UNDER A CONSTANT PRESSURE (EVEN WITH THE ENGINE OFF). BEFORE SERVICING ANY FUEL SYSTEM HOSES, FITTINGS OR LINES, THE FUEL SYSTEM PRESSURE MUST BE RELEASED. REFER TO THE FUEL PRESSURE RELEASE PROCEDURE IN THIS GROUP.

DISCONNECTION/CONNECTION

(1) Disconnect negative battery cable from battery.

(2) Perform the fuel pressure release procedure. Refer to the Fuel Pressure Release Procedure in this section.

(3) Clean the fitting of any foreign material before disassembly.

(4) Press the release tab on the side of fitting to release pull tab (Fig. 15).

CAUTION: If this release tab is not pressed prior to releasing the pull tab, the pull tab will be damaged.

(5) While pressing the release tab on the side of the fitting, use a screwdriver to pry up the pull tab (Fig. 16).

(6) Raise the pull tab until it separates from the quick-connect fitting (Fig. 17). Discard the old pull tab.

(7) Disconnect the quick-connect fitting from the fuel system component being serviced.

(8) Inspect the quick-connect fitting body and fuel system component for damage. Replace as necessary.

(9) Prior to connecting the quick-connect fitting to component being serviced, check condition of fitting and component. Clean the parts with a lint-free cloth. Lubricate them with clean engine oil.

(10) Insert the quick-connect fitting into the fuel tube or fuel system component until the built-on stop on the fuel tube or component rests against back of fitting.

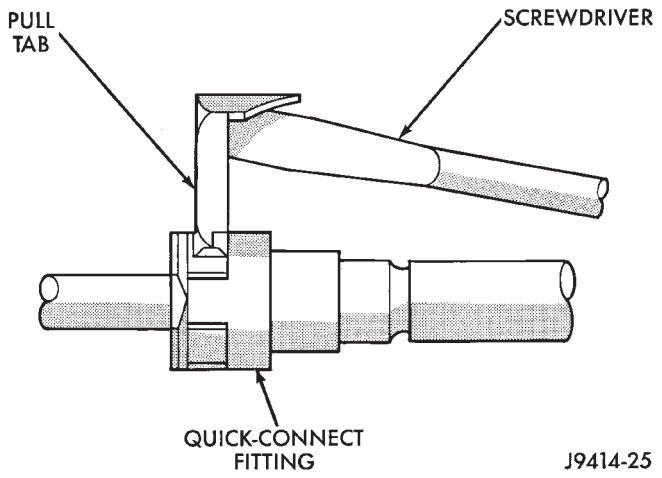

Fig. 16 Disconnecting Single-Tab Type Fitting

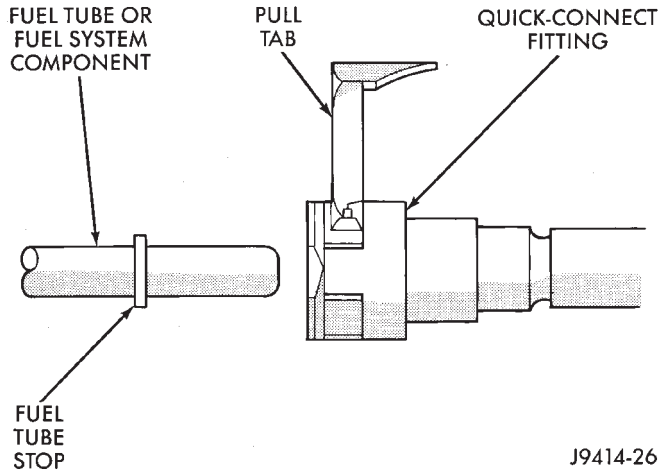

Fig. 17 Removing Pull Tab

(11) Obtain a new pull tab. Push the new tab down until it locks into place in the quick-connect fitting.

(12) Verify a locked condition by firmly pulling on fuel tube and fitting (15-30 lbs.).

(13) Connect negative cable to battery.

(14) Start engine and check for leaks.

TWO-TAB TYPE FITTING

This type of fitting is equipped with tabs located on both sides of the fitting (Fig. 18). These tabs are supplied for disconnecting the quick-connect fitting from component being serviced.

CAUTION: The interior components (O-rings, spacers) of this type of quick-connect fitting are not serviced separately, but new plastic retainers are available. Do not attempt to repair damaged fittings or fuel lines/tubes. If repair is necessary, replace the complete fuel tube assembly.

WARNING: THE FUEL SYSTEM IS UNDER A CONSTANT PRESSURE (EVEN WITH THE ENGINE OFF).

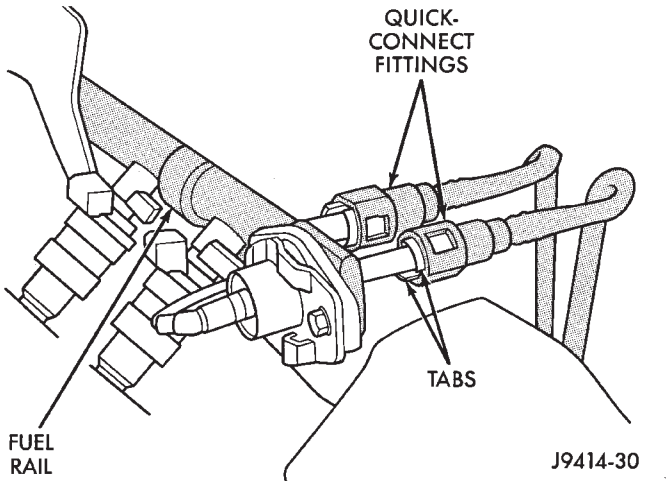

Fig. 18 Typical Two-Tab Type Quick-Connect Fitting

BEFORE SERVICING ANY FUEL SYSTEM HOSES, FITTINGS OR LINES, THE FUEL SYSTEM PRESSURE MUST BE RELEASED. REFER TO THE FUEL PRESSURE RELEASE PROCEDURE IN THIS GROUP.

DISCONNECTION/CONNECTION

(1) Disconnect negative battery cable from the battery.

(2) Perform the fuel pressure release procedure. Refer to the Fuel Pressure Release Procedure in this section.

(3) Clean the fitting of any foreign material before disassembly.

(4) To disconnect the quick-connect fitting, squeeze the plastic retainer tabs against the sides of the quick-connect fitting with your fingers. Tool use is not required for removal and may damage plastic retainer. Pull the fitting from the fuel system component being serviced. The plastic retainer will remain on the component being serviced after fitting is disconnected. The O-rings and spacer will remain in the quick-connect fitting connector body.

(5) Inspect the quick-connect fitting body and component for damage. Replace as necessary.

CAUTION: When the quick-connect fitting was disconnected, the plastic retainer will remain on the component being serviced. If this retainer must be removed, very carefully release the retainer from the component with two small screwdrivers. After removal, inspect the retainer for cracks or any damage.

(6) Prior to connecting the quick-connect fitting to component being serviced, check condition of fitting and component. Clean the parts with a lint-free cloth. Lubricate them with clean engine oil.

(7) Insert the quick-connect fitting to the component being serviced and into the plastic retainer. When a connection is made, a click will be heard.

(8) Verify a locked condition by firmly pulling on fuel tube and fitting (15-30 lbs.).

(9) Connect negative cable to battery.

(10) Start engine and check for leaks.

PLASTIC RETAINER RING TYPE FITTING

This type of fitting can be identified by the use of a full-round plastic retainer ring (Fig. 19) usually black in color.

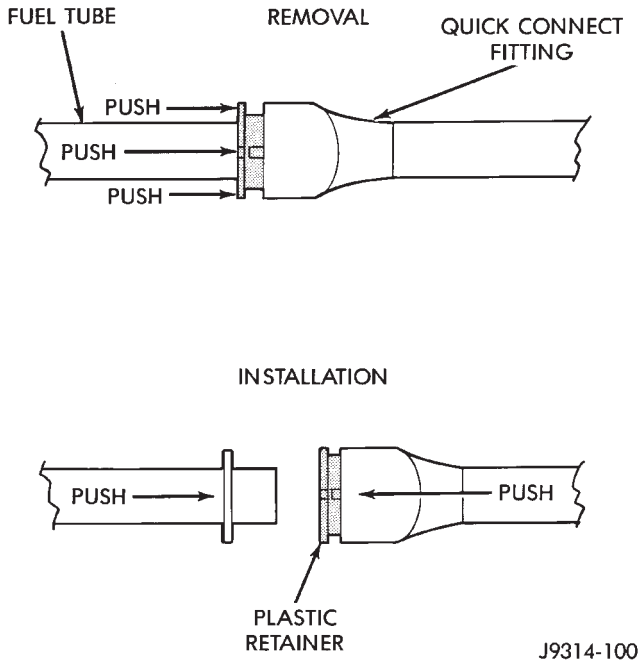

Fig. 19 Plastic Retainer Ring Type Fitting

CAUTION: The interior components (O-rings, spacers, retainers) of this type of quick-connect fitting are not serviced separately. Do not attempt to repair damaged fittings or fuel lines/tubes. If repair is necessary, replace the complete fuel tube assembly.

WARNING: THE FUEL SYSTEM IS UNDER A CONSTANT PRESSURE (EVEN WITH THE ENGINE OFF). BEFORE SERVICING ANY FUEL SYSTEM HOSES, FITTINGS OR LINES, THE FUEL SYSTEM PRESSURE MUST BE RELEASED. REFER TO THE FUEL PRESSURE RELEASE PROCEDURE IN THIS GROUP.

DISCONNECTION/CONNECTION

(1) Disconnect negative battery cable from the battery.

(2) Perform the fuel pressure release procedure. Refer to the Fuel Pressure Release Procedure in this section.

(3) Clean the fitting of any foreign material before disassembly.

(4) To release the fuel system component from the quick-connect fitting, firmly push the fitting towards the component being serviced while firmly pushing the plastic retainer ring into the fitting (Fig. 19). With the plastic ring depressed, pull the fitting from the component. **The plastic retainer ring must be pressed squarely into the fitting body. If this retainer is cocked during removal, it may be difficult to disconnect fitting. Use an open-end wrench on the shoulder of the plastic retainer ring to aid in disconnection.**

After disconnection, the plastic retainer ring will remain with the quick-connect fitting connector body.

(5) Inspect fitting connector body, plastic retainer ring and fuel system component for damage. Replace as necessary.

(6) Prior to connecting the quick-connect fitting to component being serviced, check condition of fitting and component. Clean the parts with a lint-free cloth. Lubricate them with clean engine oil.

(7) Insert the quick-connect fitting into the component being serviced until a click is felt.

(8) Verify a locked condition by firmly pulling on fuel tube and fitting (15-30 lbs.).

(9) Connect negative battery cable to battery.

(10) Start engine and check for leaks.

FUEL TANKS

INDEX

	page		page
Fuel Gauge Sending Unit	16	Fuel Tank Pressure Relief/Rollover Valve	16
Fuel Tank	13	General Information	13
Fuel Tank Capacities	13	Heat Shields	13
Fuel Tank Filler Tube Cap	13	No-Lead Fuel Tank Filler Tube	13

GENERAL INFORMATION

All XJ and YJ models pass a full 360 degree rollover test without fuel leakage. To accomplish this, fuel and vapor flow controls are required for all fuel tank connections.

All models are equipped with a pressure relief/rollover valve mounted in the top of the fuel tank. The return line from the fuel pump to the fuel tank contains a one-way check valve.

An evaporative control system prevents raw fuel vapor from escaping into the atmosphere. Fuel vapors from the fuel tank are collected in the EVAP canister. When the engine is operating, the vapors are drawn into the intake manifold to be used in combustion. Refer to Group 25, Emission Control System for more information.

Inspect all hose/tube connections for completeness. Be sure that leaks are not present. Replace any hose that is cracked, scuffed, swelled, has rubbed against other vehicle components or shows any other sign of wear that could lead to failure. If it is necessary to replace a hose, only hose marked EFM/EFI may be used.

When installing hoses, be sure that they are routed away from contact with other vehicle components.

The hose clamps used on fuel injected vehicles are of a special rolled edge construction to prevent the edge of the clamp from cutting into the hose. Only these rolled edge type clamps may be used on this system. Other types of clamps may cut into the hoses and cause high-pressure fuel leaks.

FUEL TANK CAPACITIES

Refer to the Specifications section at the end of this group.

NO-LEAD FUEL TANK FILLER TUBE

All vehicles are designed to operate using Unleaded fuels. The diameter of the opening in the fuel tank filler neck is sized to only accept unleaded fuel nozzles. Gasoline station pumps for unleaded and leaded fuels have different size nozzles. Leaded fuel nozzles are larger in diameter than unleaded nozzles. The fuel tank filler neck opening is also equipped with a deflector, which the smaller unleaded nozzle pushes back upon entering the filler neck. The deflector will prevent the larger diameter leaded fuel nozzles from entering the filler neck and will deflect fuel away from the filler neck. This happens if filling of the tank with leaded fuel is attempted.

A label is attached to the instrument panel under the fuel gauge that reads UNLEADED FUEL ONLY as a reminder to the driver. A similar label is located near the fuel tank filler.

FUEL TANK FILLER TUBE CAP

The loss of any fuel or vapor out of the filler neck is prevented by the use of a safety filler cap. This will release only under pressure of 10.9 to 13.45 kPa (1.58 to 1.95 psi). The vacuum release is between .97 and 2.0 kPa (.14 and .29 psi). This cap must be replaced by a similar unit if replacement is necessary.

CAUTION: Remove the fuel tank filler tube cap prior to removing or repairing fuel lines to relieve fuel tank pressure.

HEAT SHIELDS

The sheet metal heat shields may have to be removed when servicing the fuel tank, fuel lines or vapor vent line. The heat shields must be installed to protect the lines and tank from the heat of the exhaust system. Refer to Group 11, Exhaust System and Intake Manifold for proper installation.

FUEL TANK

WARNING: THE FUEL SYSTEM IS UNDER CONSTANT FUEL PRESSURE (EVEN WITH THE ENGINE OFF) OF APPROXIMATELY 131-269 KPA (19-39 PSI). THIS PRESSURE MUST BE RELEASED BEFORE SERVICING FUEL TANK.

REMOVAL—XJ MODELS

Perform the preceding Fuel System Pressure Release Procedure.

(1) Disconnect negative battery cable.

(2) Remove the fuel filler cap. Using an approved portable gasoline siphon/storage tank, drain fuel tank.
(3) Raise and support vehicle.
(4) Disconnect fuel fill hose and fill vent hose from filler neck (Fig. 1).

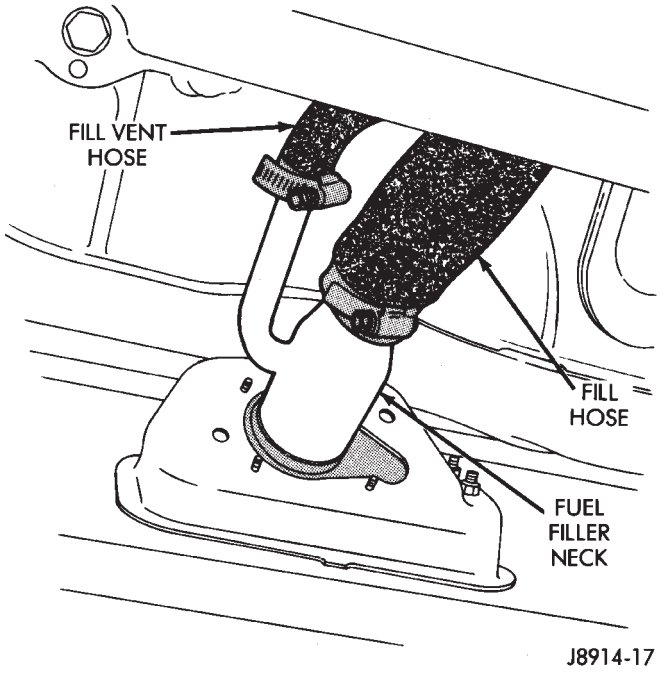

Fig. 1 Filler Neck Hoses—XJ Models

(5) Disconnect fuel pump module wire connector. Remove tie straps securing connector harness to fuel supply and return tubes.

WARNING: WRAP SHOP TOWELS AROUND FUEL HOSES TO ABSORB ANY FUEL SPILLAGE DURING FUEL TANK REMOVAL.

(6) Disconnect fuel tank vent hose from vent tube.
(7) Disconnect fuel supply and return hoses from tubes.
(8) If equipped, remove skid plate (Fig. 2).
(9) Remove fuel tank shield (Fig. 3).
(10) Center a transmission jack under the fuel tank.
(11) Remove support strap nuts. Move straps away from tank (Fig. 3).
(12) Lower fuel tank on transmission jack.

INSTALLATION—XJ MODELS

(1) Raise fuel tank into position. Connect fuel fill hose and vent hose to filler neck and tighten clamps.
(2) Wrap support straps around tank and over studs. Tighten strap nuts to 11.3 N·m (100 in. lbs.) torque.
(3) Remove transmission jack.
(4) Install tank shield.
(5) If equipped, install tank skid plate.
(6) Connect vent hose to vent tube.
(7) Connect fuel supply hose to supply tube and fuel return hose to return tube. Tighten hose clamps.

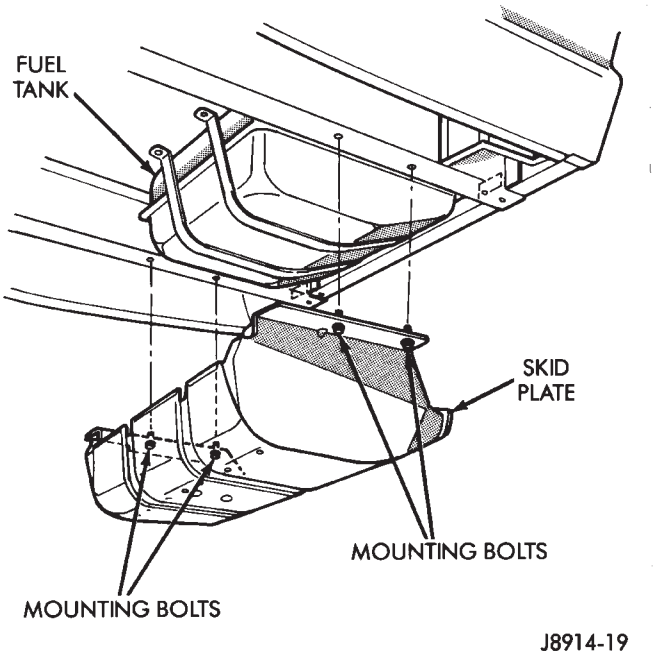

Fig. 2 Skid Plate—XJ Models

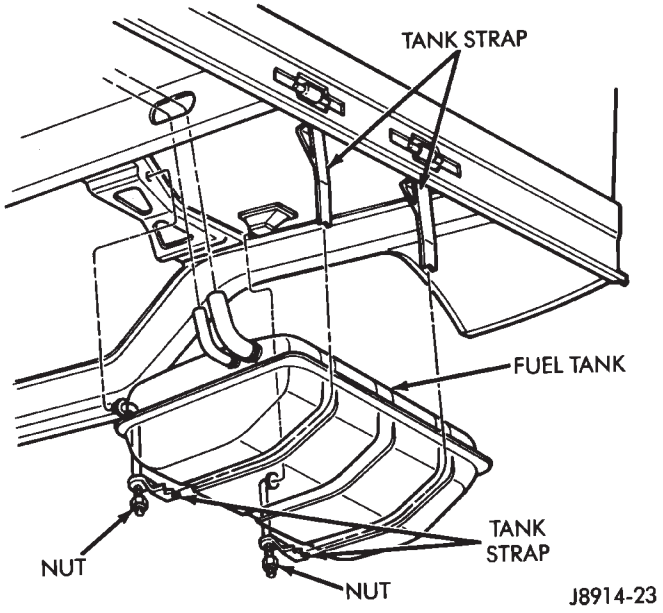

Fig. 3 Fuel Tank Remove/Install—XJ Models

(8) Connect fuel pump module wire connector to harness connector. Secure fuel pump module wire harness to fuel tubes with tie straps.
(9) Lower vehicle.
(10) Fill fuel tank. Install filler cap.
(11) Connect negative battery cable to battery.
(12) Start vehicle and inspect for leaks.

REMOVAL—YJ MODELS

WARNING: EXTINGUISH ALL TOBACCO SMOKING PRODUCTS BEFORE SERVICING THE FUEL SYSTEM. KEEP OPEN FLAME AWAY FROM FUEL SYSTEM COMPONENTS.

(1) Disconnect negative battery cable.

(2) Remove the fuel filler cap. Using an approved portable gasoline siphon/storage tank, drain fuel tank.

(3) Raise and support vehicle.

(4) Using a small straight blade screwdriver, pull back the stems of the push clips that secure the fuel filler neck shroud (located at bottom of left rear wheel well) in place (Fig. 4). This unlocks the push clip allowing them to be removed by pulling assembly out of shroud. Remove shroud.

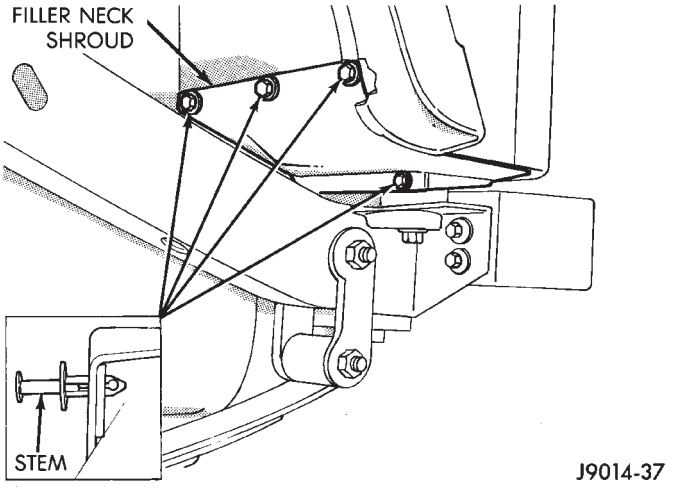

Fig. 4 Fuel Filler Neck Shroud—YJ Models

(5) Disconnect fuel fill hose and fill vent hose from filler neck (Fig. 5).

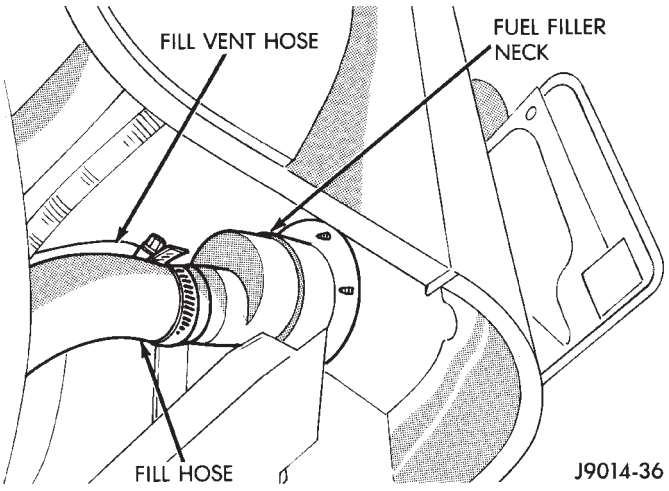

Fig. 5 Filler Neck Hoses—YJ Models

WARNING: WRAP SHOP TOWELS AROUND FUEL HOSES TO ABSORB ANY FUEL SPILLAGE DURING FUEL TANK REMOVAL.

(6) Disconnect fuel tank vent hose from vent tube. Disconnect fuel supply and return hoses from tubes (Fig. 6).

The fuel tank and skid plate are removed as an assembly.

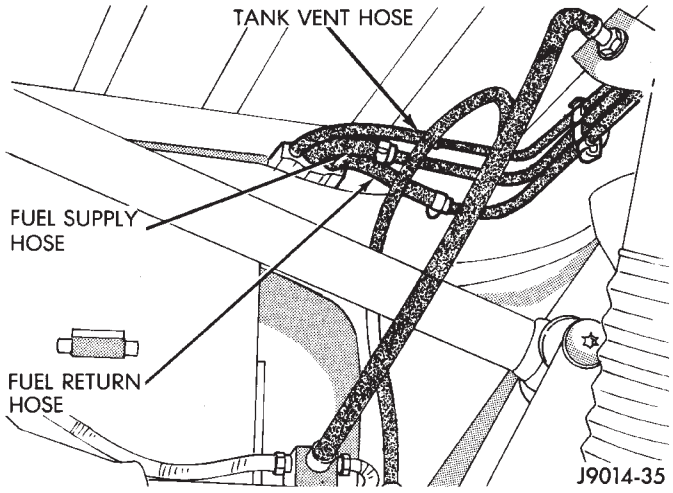

Fig. 6 Fuel Tank Hoses—YJ Models

(7) Centrally position a transmission jack under skid plate/fuel tank assembly.

(8) Remove skid plate/fuel tank assembly mounting nuts (Fig. 7). **Do not loosen tank strap nuts.**

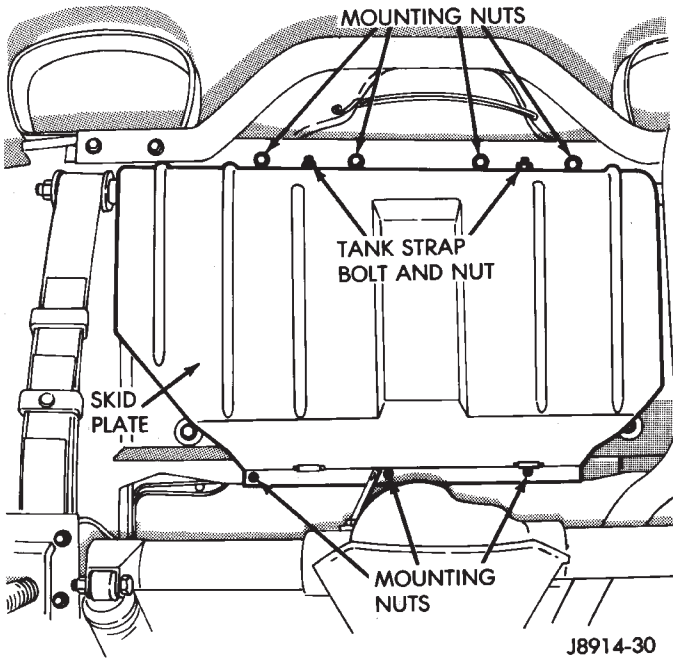

Fig. 7 Fuel Tank—Remove/Install—YJ Models

(9) Lower the skid plate/fuel tank assembly slightly and disconnect the gauge sender wire connector.

(10) Lower the fuel tank on transmission jack.

(11) Remove tank strap nuts to remove tank from skid plate.

INSTALLATION—YJ MODELS

(1) Place tank into skid plate. Wrap straps around tank with strap bolts inserted through holes in skid plate. Tighten strap nuts to 7.3 N·m (65 in. lbs.) torque.

(2) Raise skid plate/fuel tank until gauge sender wire connector can be connected to harness connector.

(3) Finish raising skid plate/fuel tank assembly into position. Tighten mounting nuts to 16 N·m (12 ft. lbs.) torque. Remove transmission jack.

(4) Connect fuel fill hose and fill vent hose to filler neck. Tighten hose clamps.

(5) Connect vent hose to vent tube.

(6) Connect fuel supply hose to the supply tube and fuel return hose to return tube. Tighten hose clamps.

(7) Install fuel filler neck shroud with push clips.

(8) Lower vehicle.

(9) Fill fuel tank. Install filler cap.

(10) Connect negative battery cable to battery.

(11) Start vehicle and inspect for leaks.

FUEL GAUGE SENDING UNIT

The fuel gauge sending unit is attached to the fuel pump module. Refer to Fuel Pump Module in the Fuel Delivery System section of this group.

FUEL TANK PRESSURE RELIEF/ROLLOVER VALVE

The fuel tank is equipped with a pressure relief/rollover valve (Fig. 8). The dual function valve will relieve fuel tank pressure and prevent fuel flow through the fuel tank vent tubes in the event of accidental vehicle rollover.

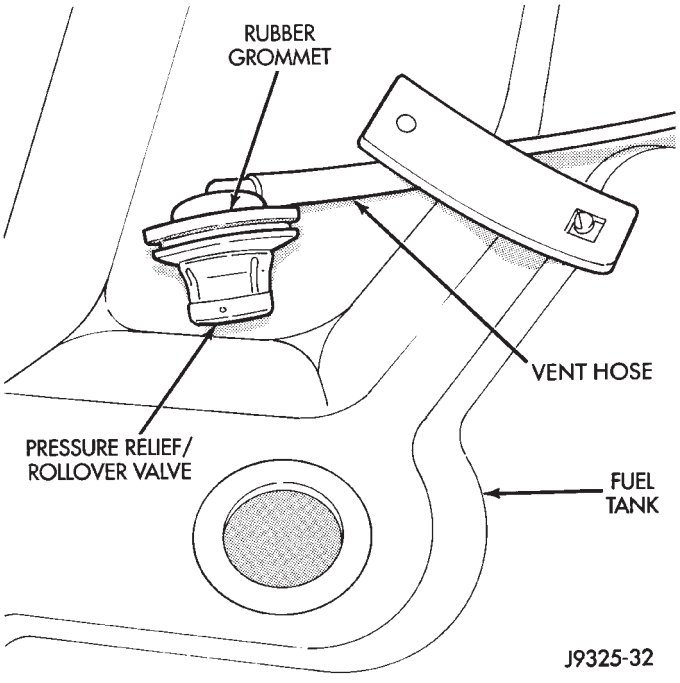

Fig. 8 Valve Location—Typical

The valve consists of a plunger, spring and orifice/guide plate (Fig. 9). The valve is normally open allowing fuel vapor to vent to the EVAP canister. Here it is stored until it can be consumed by the engine (under controlled conditions). The plunger seats in the guide plate at the orifice preventing liquid fuel from reaching the EVAP canister. This is done if bottom of plunger is contacted by fuel sloshing in tank when vehicle is cornering.

In the event of accidental vehicle rollover, the valve is inverted. In this position the plunger is forced against the guide plate and raw fuel is prevented from flowing through the valve orifice into the fuel tank vent tube.

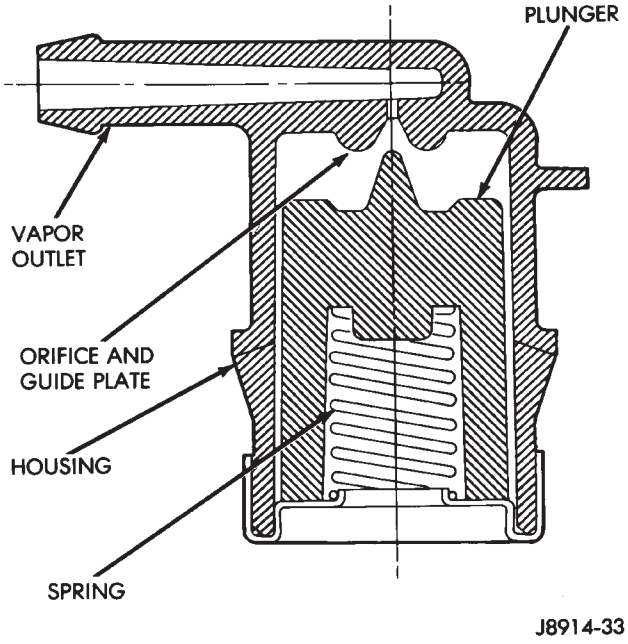

Fig. 9 Pressure Relief/Rollover Valve Operation

REMOVAL

WARNING: THE FUEL SYSTEM IS UNDER A CONSTANT PRESSURE (EVEN WITH THE ENGINE OFF). BEFORE SERVICING THE PRESSURE RELIEF/ROLLOVER VALVE, THE FUEL SYSTEM PRESSURE MUST BE RELEASED. REFER TO THE FUEL PRESSURE RELEASE PROCEDURE IN THIS GROUP.

(1) Disconnect negative battery cable.

(2) Remove the fuel filler cap and drain fuel tank. Refer to Fuel Tank Removal.

(3) Remove fuel tank. Refer to Fuel Tank Removal.

(4) The rollover valve is seated in a grommet. Remove by prying one side upward and then roll the grommet out of tank (Fig. 8).

INSTALLATION

(1) Start one side of grommet into opening in fuel tank. Using finger pressure only, press valve/grommet into place.

(2) Install fuel tank. Refer to Fuel Tank Installation.

(3) Fill fuel tank. Install fuel tank filler cap.

(4) Connect negative battery cable.

(5) Start vehicle and check for leaks.

ACCELERATOR PEDAL AND THROTTLE CABLE

GENERAL INFORMATION

The accelerator pedal is connected to the throttle body linkage by the throttle cable. The cable is protected by a plastic sheathing and is connected to the throttle body linkage by a ball socket. It is connected to the upper part of the accelerator pedal arm by a plastic retainer (clip) (Fig. 10). This retainer (clip) snaps into the top of the accelerator pedal arm. Retainer tabs (built into the cable sheathing) (Fig. 10) fasten the cable to the dash panel.

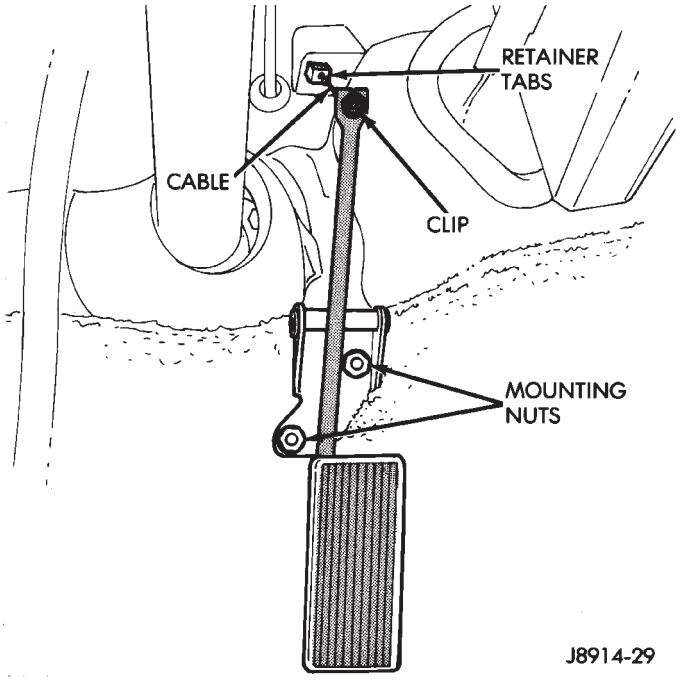

Fig. 10 Accelerator Pedal Mounting—Typical

Dual throttle return springs (attached to the throttle shaft) are used to close the throttle.

CAUTION: Never attempt to remove or alter these springs.

ACCELERATOR PEDAL

CAUTION: Be careful not to damage or kink the cable core wire (within the cable sheathing) while servicing the accelerator pedal or throttle cable.

REMOVAL

(1) From inside the vehicle, hold up accelerator pedal. Remove plastic cable retainer (clip) and throttle cable core wire from upper end of accelerator pedal arm (Fig. 10). Plastic cable retainer (clip) snaps into pedal arm.

(2) Remove accelerator pedal mounting bracket nuts. Remove accelerator pedal assembly.

INSTALLATION

(1) Place accelerator pedal assembly over studs protruding from floor pan. Tighten mounting nuts to 5 N·m (36 in. lbs.) torque.

(2) Slide throttle cable into opening in top of pedal arm. Push plastic cable retainer (clip) into accelerator pedal arm opening until it snaps into place.

(3) Before starting engine, operate accelerator pedal to check for any binding.

THROTTLE CABLE

REMOVAL

(1) From inside the vehicle, hold up accelerator pedal. Remove plastic cable retainer (clip) and throttle cable core wire from upper end of accelerator pedal arm (Fig. 10). Plastic cable retainer (clip) snaps into pedal arm.

(2) Remove the cable core wire at pedal arm.

(3) From inside the vehicle, pinch both sides of the cable housing retainer tabs (Fig. 10) at the dash panel. Remove cable housing from dash panel and pull into the engine compartment.

(4) Remove cable from clip on the engine cylinder head (valve) cover.

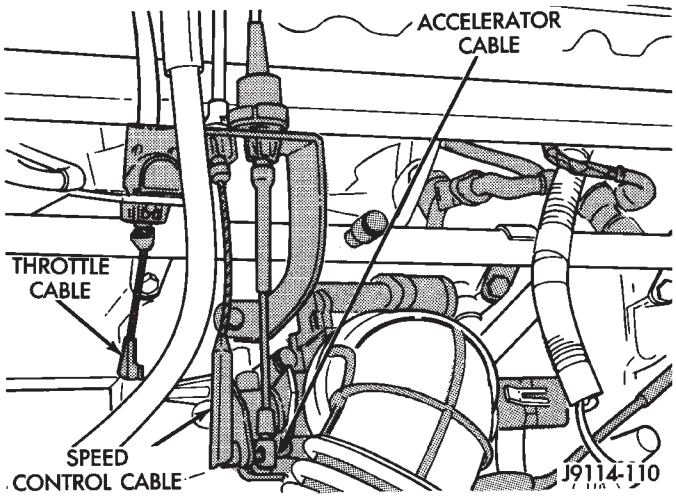

Fig. 11 Throttle (Accelerator) Cable—Typical

(5) Remove the throttle cable ball end socket at throttle body linkage (snaps off) (Fig. 11).

(6) Remove throttle cable from throttle body mounting bracket by compressing retainer tabs and pushing cable through hole in bracket. Remove throttle cable from vehicle.

INSTALLATION

(1) Slide throttle cable through hole in throttle body bracket until retainer tabs lock into bracket. Connect cable ball end to throttle body linkage ball (snaps on).

(2) Snap cable into clip on the engine cylinder head (valve) cover.

(3) Push other end of cable through opening in dash panel until retaining tabs lock into panel.

(4) From inside drivers compartment, slide throttle cable core wire into opening in top of accelerator pedal arm. Push cable retainer (clip) into pedal arm opening until it snaps in place.

(5) Before starting engine, operate accelerator pedal to check for any binding.

MULTI-PORT FUEL INJECTION (MFI)—COMPONENT DESCRIPTION/SYSTEM OPERATION

INDEX

	page
Air Cleaner	29
Air Conditioning (A/C) Clutch Relay—PCM Output	26
Air Conditioning (A/C) Controls—PCM Input	21
Auto Shutdown (ASD) Relay—PCM Output	26
Automatic Shutdown (ASD) Sense—PCM Input	21
Battery Voltage—PCM Input	21
Brake Switch—PCM Input	22
Camshaft Position Sensor—PCM Input	22
Crankshaft Position Sensor—PCM Input	22
Data Link Connector—PCM Input	22
Data Link Connector—PCM Output	27
EMR Lamp—PCM Output	27
Engine Coolant Temperature Sensor—PCM Input	23
Extended Idle Switch—PCM Input	23
Fuel Injectors—PCM Output	27
Fuel Pressure Regulator	33
Fuel Pump Relay—PCM Output	27
Fuel Rail	33
General Information	19
Generator Field—PCM Output	27
Generator Lamp—PCM Output	27
Idle Air Control (IAC) Motor—PCM Output	27
Ignition Circuit Sense—PCM Input	23
Ignition Coil—PCM Output	28
Intake Manifold Air Temperature Sensor—PCM Input	22
Malfunction Indicator Lamp—PCM Output	28
Manifold Absolute Pressure (MAP) Sensor—PCM Input	23
Open Loop/Closed Loop Modes of Operation	30
Oxygen (O2S) Sensor—PCM Input	24
Park/Neutral Switch—PCM Input	24
Power Ground	24
Power Steering Pressure Switch—PCM Input	24
Powertrain Control Module (PCM)	20
Radiator Fan Relay—PCM Output	28
SCI Receive—PCM Input	24
SCI Transmit—PCM Output	29
Sensor Return—PCM Input	25
Shift Indicator—PCM Output	29
Speed Control—PCM Input	25
Speed Control—PCM Output	29
Tachometer—PCM Output	29
Throttle Body	33
Throttle Position Sensor (TPS)—PCM Input	25
Torque Converter Clutch Relay—PCM Output	29
Vehicle Speed Sensor—PCM Input	25

GENERAL INFORMATION

All 2.5L 4-cylinder and 4.0L 6-cylinder engines are equipped with sequential Multi-Port Fuel Injection (MFI). The MFI system provides precise air/fuel ratios for all driving conditions.

The Powertrain Control Module (PCM) operates the fuel system. The PCM was formerly referred to as the SBEC or engine controller. The PCM is a preprogrammed, dual microprocessor digital computer. It regulates ignition timing, air-fuel ratio, emission control devices, charging system, speed control, air conditioning compressor clutch engagement and idle speed. The PCM can adapt its programming to meet changing operating conditions.

Powertrain Control Module (PCM) Inputs represent the instantaneous engine operating conditions. Air-fuel mixture and ignition timing calibrations for various driving and atmospheric conditions are preprogrammed into the PCM. The PCM monitors and analyzes various inputs. It then computes engine fuel and ignition timing requirements based on these inputs. Fuel delivery control and ignition timing will then be adjusted accordingly.

Other inputs to the PCM are provided by the brake light switch, air conditioning select switch and the speed control switches. All inputs to the PCM are converted into signals.

Electrically operated fuel injectors spray fuel in precise metered amounts into the intake port directly above the intake valve. The injectors are fired in a specific sequence by the PCM. The PCM maintains an air/fuel ratio of 14.7 to 1 by constantly adjusting injector pulse width. Injector pulse width is the length of time that the injector opens and sprays fuel into the chamber. The PCM adjusts injector pulse width by opening and closing the ground path to the injector.

Manifold absolute pressure (air density) and engine rpm (speed) are the primary inputs that determine fuel injector pulse width. The PCM also monitors other inputs when adjusting air-fuel ratio.

Inputs That Effect Fuel Injector Pulse Width:

- Exhaust gas oxygen content
- Engine coolant temperature
- Manifold absolute pressure (MAP)
- Engine speed
- Throttle position
- Battery voltage
- Air conditioning selection
- Transmission gear selection (automatic transmissions only)
- Speed control

The powertrain control module (PCM) adjusts ignition timing by controlling ignition coil operation. The ignition coil receives battery voltage when the ignition key is in the run or starter position. The PCM

provides a ground for the ignition coil. The coil discharges when the PCM supplies a ground. By switching the ground path on and off, the PCM regulates ignition timing.

The sensors and switches that provide inputs to the powertrain control module (PCM) comprise the Engine Control System. It is also comprised of the PCM Outputs (engine control devices that the are operated by the PCM).

SYSTEM DIAGNOSIS

The powertrain control module (PCM) tests many of its own input and output circuits. If a Diagnostic Trouble Code (DTC) is found in a major system, this information is stored in the PCM memory. Refer to On-Board Diagnostics in the MFI System—General Diagnosis section of this group for DTC information.

POWERTRAIN CONTROL MODULE (PCM)

The PCM operates the fuel system. The PCM was formerly referred to as the SBEC or engine controller. The PCM is a pre-programmed, dual microprocessor digital computer. It regulates ignition timing, air-fuel ratio, emission control devices, charging system, speed control, air conditioning compressor clutch engagement and idle speed. The PCM can adapt its programming to meet changing operating conditions.

On XJ models, the PCM is located in the engine compartment next to the air cleaner (Fig. 1). On YJ models, the PCM is located in the engine compartment behind the windshield washer fluid reservoir (Fig. 2).

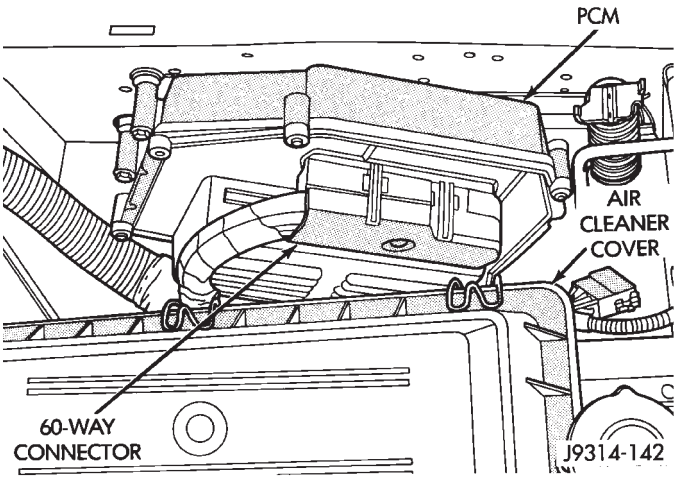

Fig. 1 PCM Location—XJ Models

The PCM receives input signals from various switches and sensors. Based on these inputs, the PCM regulates various engine and vehicle operations through different system components. These components are referred to as PCM Outputs. The sensors and switches that provide inputs to the PCM are considered PCM Inputs.

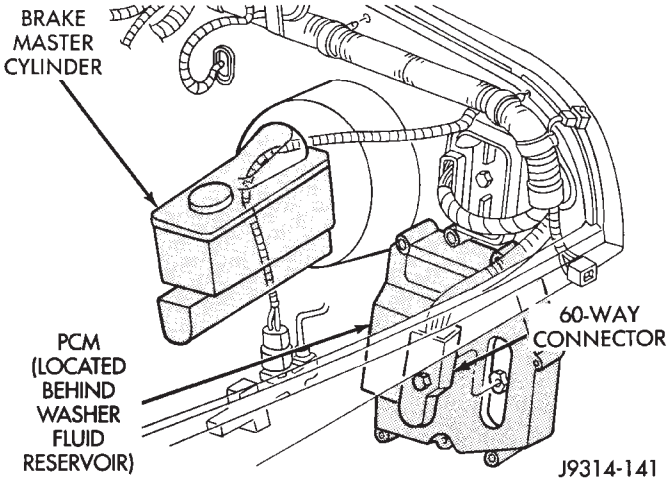

Fig. 2 PCM Location—YJ Models

The PCM adjusts ignition timing based upon inputs it receives from sensors that react to: engine rpm, manifold absolute pressure, coolant temperature, throttle position, transmission gear selection (automatic transmission), vehicle speed and the brake switch.

The PCM adjusts idle speed based on inputs it receives from sensors that react to: throttle position, vehicle speed, transmission gear selection, coolant temperature and from inputs it receives from the air conditioning clutch switch and brake switch.

Based on inputs that it receives, the PCM adjusts ignition coil dwell. The PCM also adjusts the generator charge rate through control of the generator field and provides speed control operation.

Powertrain Control Module (PCM) Inputs:

- Generator output
- A/C request (if equipped with factory A/C)
- A/C select (if equipped with factory A/C)
- Auto shutdown (ASD) sense
- Intake manifold air temperature sensor
- Battery voltage
- Brake switch
- Engine coolant temperature sensor
- Crankshaft position sensor
- Ignition circuit sense (ignition switch in run position)
- Manifold absolute pressure sensor
- Overdrive/override switch
- Oxygen sensor
- Park/neutral switch (auto. trans. only)
- SCI receive (DRB scan tool connection)
- Speed control resume switch
- Speed control set switch
- Speed control on/off switch
- Camshaft position sensor signal
- Throttle position sensor
- Vehicle speed sensor
- Sensor return
- Power ground

- Signal ground

Powertrain Control Module (PCM) Outputs:

- A/C clutch relay
- Idle air control (IAC) motor
- Auto shutdown (ASD) relay
- Generator field
- Malfunction indicator lamp (Check Engine Lamp)
- Fuel injectors
- Fuel pump relay
- Ignition coil
- SCI transmit (DRB scan tool connection)
- Shift indicator lamp (manual transmission only)
- Speed control vacuum solenoid
- Speed control vent solenoid
- Tachometer (on instrument panel, if equipped)
- Torque converter clutch relay (3-speed auto. trans. only)

The PCM contains a voltage convertor. This converts battery voltage to a regulated 8.0 volts. It is used to power the crankshaft position sensor, camshaft position sensor and vehicle speed sensor. The PCM also provides a five (5) volt supply for the Manifold Absolute Pressure (MAP) sensor and Throttle Position Sensor (TPS).

AIR CONDITIONING (A/C) CONTROLS—PCM INPUT

The A/C control system information applies to factory installed air conditioning units only.

A/C SELECT SIGNAL: When the A/C switch is in the ON position and the A/C low-pressure switch is closed, an input signal is sent to the powertrain control module (PCM). The signal informs the PCM that the A/C has been selected. The PCM adjusts idle speed to a pre-programmed rpm through the idle air control (IAC) motor to compensate for increased engine load.

A/C REQUEST SIGNAL: Once A/C has been selected, the PCM receives the A/C request signal from the evaporator switch. The input indicates that the evaporator temperature is in the proper range for A/C application. The PCM uses this input to cycle the A/C compressor clutch (through the A/C relay). It will also determine the correct engine idle speed through the IAC motor position.

If the A/C low-pressure switch opens (indicating a low refrigerant level), the PCM will not receive an A/C select signal. The PCM will then remove the ground from the A/C relay. This will deactivate the A/C compressor clutch.

If the evaporator switch opens, (indicating that evaporator is not in proper temperature range), the PCM will not receive the A/C request signal. The PCM will then remove the ground from the A/C relay, deactivating the A/C compressor clutch.

AUTOMATIC SHUTDOWN (ASD) SENSE—PCM INPUT

A 12 volt signal at this input indicates to the PCM that the ASD has been activated. The ASD relay is located in the power distribution center (PDC) in the engine compartment (Figs. 3 or 4). It is used to connect the ignition coil, generator field winding and fuel injectors to 12 volt + power supply. Also refer to Automatic Shutdown Relay—PCM Output.

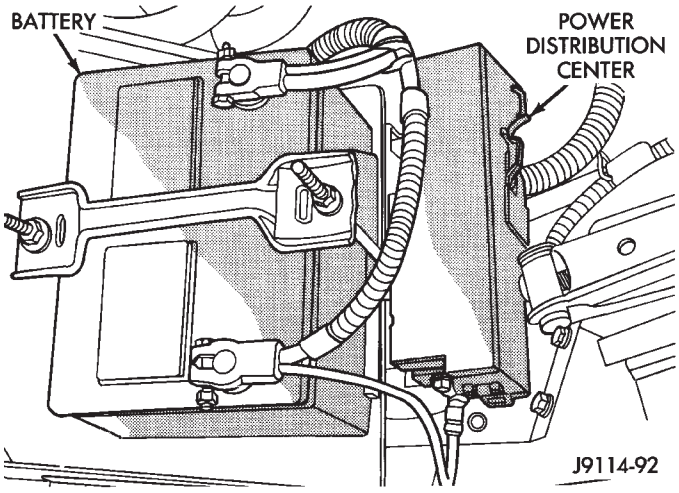

Fig. 3 Power Distribution Center—YJ Models

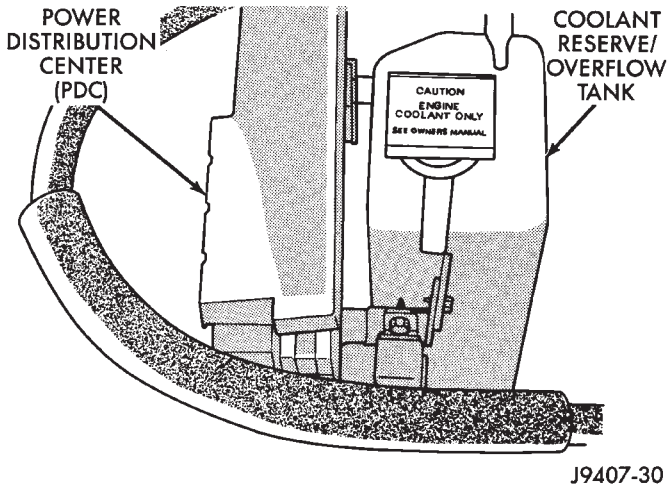

Fig. 4 Power Distribution Center—XJ Models

This input is used only to sense that the ASD relay is energized. If the PCM does not see 12 volts at this input when the ASD should be activated, it will set a Diagnostic Trouble Code (DTC).

BATTERY VOLTAGE—PCM INPUT

The battery voltage input provides power to the powertrain control module (PCM). It also informs the PCM what voltage level is supplied to the ignition coil and fuel injectors.

If battery voltage is low, the PCM will increase injector pulse width (period of time that the injector is

energized). This is done to compensate for the reduced flow through injector caused by the lowered voltage.

BRAKE SWITCH—PCM INPUT

When the brake light switch is activated, the powertrain control module (PCM) receives an input indicating that the brakes are being applied. After receiving this input, the PCM maintains idle speed to a scheduled rpm through control of the idle air control (IAC) motor. The brake switch input is also used to operate the speed control system.

CAMSHAFT POSITION SENSOR—PCM INPUT

A sync signal is provided by the camshaft position sensor located in the distributor (Fig. 5). The sync signal from this sensor works in conjunction with the crankshaft position sensor to provide the powertrain control module (PCM) with inputs. This is done to establish and maintain correct injector firing order.

Refer to Camshaft Position Sensor in Group 8D, Ignition System for more information.

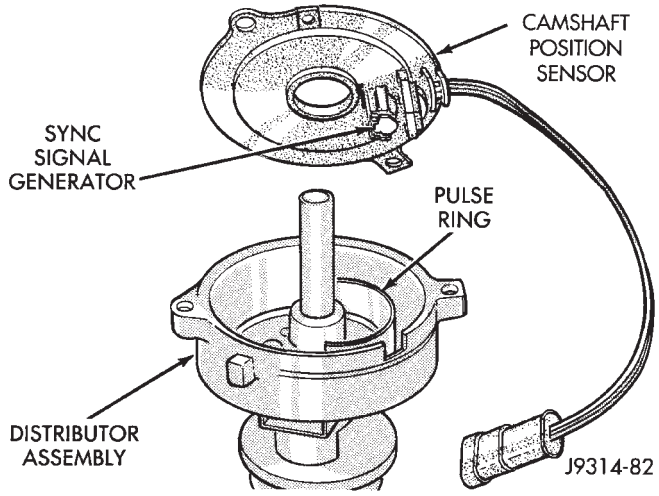

Fig. 5 Camshaft Position Sensor

DATA LINK CONNECTOR—PCM INPUT

The data link connector (diagnostic scan tool connector) links the DRB scan tool with the powertrain control module (PCM). The data link connector is located in the engine compartment (Figs. 6 or 7). For operation of the DRB scan tool, refer to the appropriate Powertrain Diagnostic Procedures service manual.

The data link connector uses two different pins on the PCM. One is for Data Link Transmit and the other is for Data Link Receive.

INTAKE MANIFOLD AIR TEMPERATURE SENSOR—PCM INPUT

The intake manifold air temperature sensor is installed in the intake manifold with the sensor element extending into the air stream (Figs. 8 or 9). The sensor provides an input voltage to the powertrain control module (PCM) indicating intake manifold air temperature. The input is used along with inputs from other sensors to determine injector pulse width. As the temperature of the air-fuel stream in the manifold varies, the sensor resistance changes. This results in a different input voltage to the PCM.

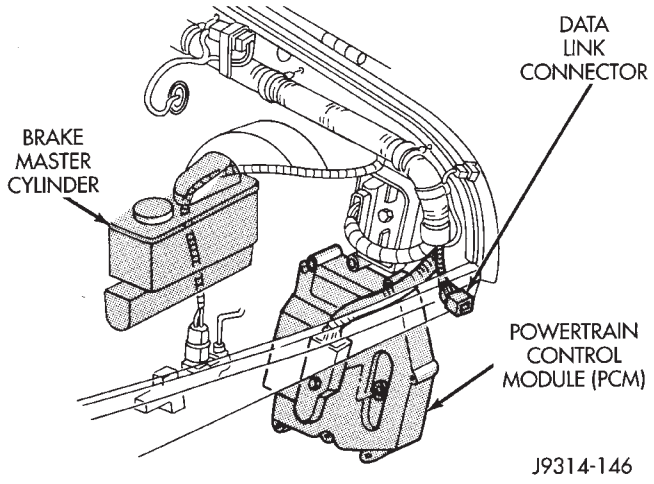

Fig. 6 Data Link Connector—YJ Models—Typical

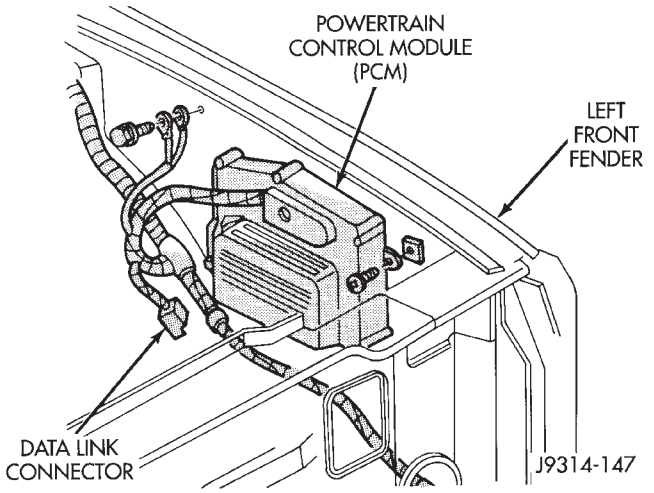

Fig. 7 Data Link Connector—XJ Models—Typical

CRANKSHAFT POSITION SENSOR—PCM INPUT

This sensor is a Hall Effect device that detects notches in the flywheel (manual transmission), or flexplate (automatic transmission).

This sensor is used to indicate to the powertrain control module (PCM) that a spark and or fuel injection event is to be required. The output from this sensor, in conjunction with the camshaft position sensor signal, is used to differentiate between fuel injection and spark events. It is also used to synchronize the fuel injectors with their respective cylinders.

Refer to Group 8D, Ignition System for more crankshaft position sensor information.

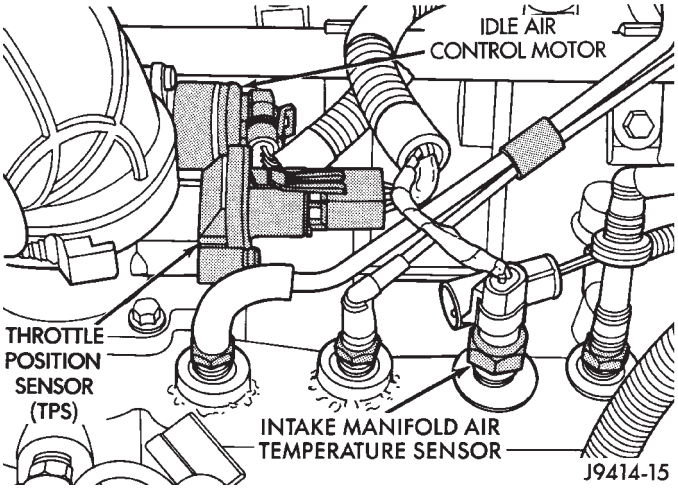

Fig. 8 Sensor Location—4.0L Engine

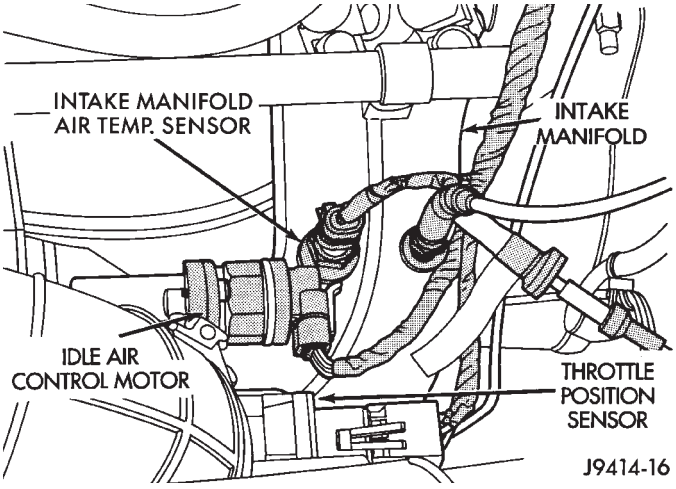

Fig. 9 Sensor Location—2.5L Engine

The engine will not operate if the PCM does not receive a crankshaft position sensor input.

ENGINE COOLANT TEMPERATURE SENSOR—PCM INPUT

The engine coolant temperature sensor is installed in the thermostat housing (Fig. 10) and protrudes into the water jacket. The sensor provides an input voltage to the powertrain control module (PCM) relating coolant temperature. The PCM uses this input along with inputs from other sensors to determine injector pulse width and ignition timing. As coolant temperature varies, the coolant temperature sensor's resistance changes. The change in resistance results in a different input voltage to the PCM.

When the engine is cold, the PCM will operate in Open Loop cycle. It will demand slightly richer air-fuel mixtures and higher idle speeds. This is done until normal operating temperatures are reached.

Refer to Open Loop/Closed Loop Modes of Operation in this section of the group for more information.

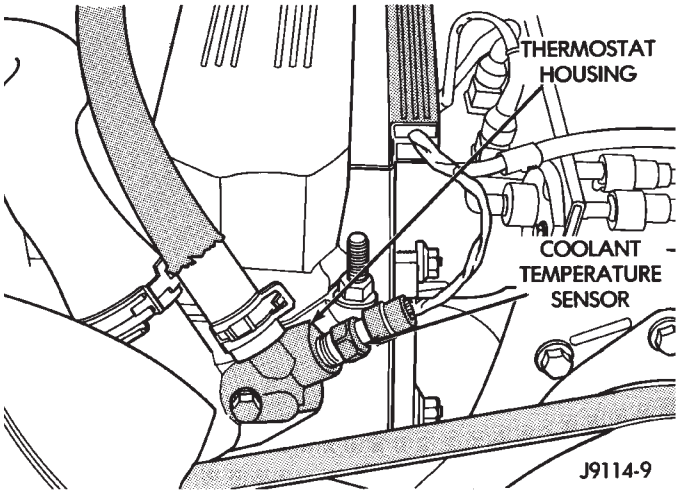

Fig. 10 Engine Coolant Temperature Sensor—Typical

EXTENDED IDLE SWITCH—PCM INPUT

OPTIONAL POLICE PACKAGE ONLY

The extended idle switch is used to raise the engine idle speed to approximately 1000 rpm. This is when the shifter is in either the Park or Neutral position. A rocker-type 2-wire switch (extended idle switch) is mounted to the instrument panel. This switch will supply a ground circuit to the powertrain control module (PCM). **The switch is available only with 4.0L engine when supplied with the optional police package.**

For testing and diagnosis of this switch and its circuit, refer to the MFI System—General Diagnosis section of this group.

IGNITION CIRCUIT SENSE—PCM INPUT

The ignition circuit sense input tells the powertrain control module (PCM) the ignition switch has energized the ignition circuit. Refer to the wiring diagrams for circuit information.

MANIFOLD ABSOLUTE PRESSURE (MAP) SENSOR—PCM INPUT

The MAP sensor reacts to absolute pressure in the intake manifold. It provides an input voltage to the powertrain control module (PCM). As engine load changes, manifold pressure varies. The change in manifold pressure causes MAP sensor voltage to change. The change in MAP sensor voltage results in a different input voltage to the PCM. The input voltage level supplies the PCM with information about ambient barometric pressure during engine start-up (cranking) and engine load while the engine is running. The PCM uses this input along with inputs from other sensors to adjust air-fuel mixture.

The MAP sensor is mounted on the dash panel. The sensor is connected to the throttle body with a vacuum hose and to the PCM electrically.

OXYGEN (O2S) SENSOR—PCM INPUT

The O2S sensor is located in the exhaust down pipe (Fig. 11). It provides an input voltage to the powertrain control module (PCM) relating the oxygen content of the exhaust gas. The PCM uses this information to fine tune the air-fuel ratio by adjusting injector pulse width.

The O2S sensor produces voltages from 0 to 1 volt. This voltage will depend upon the oxygen content of the exhaust gas in the exhaust manifold. When a large amount of oxygen is present (caused by a lean air-fuel mixture), the sensor produces a low voltage. When there is a lesser amount present (rich air-fuel mixture) it produces a higher voltage. By monitoring the oxygen content and converting it to electrical voltage, the sensor acts as a rich-lean switch.

The oxygen sensor is equipped with a heating element that keeps the sensor at proper operating temperature during all operating modes. Maintaining correct sensor temperature at all times allows the system to enter into closed loop operation sooner.

In Closed Loop operation, the powertrain control module (PCM) monitors the O2S sensor input (along with other inputs). It then adjusts the injector pulse width accordingly. During Open Loop operation, the PCM ignores the O2S sensor input and adjusts injector pulse width to a preprogrammed value (based on other sensor inputs).

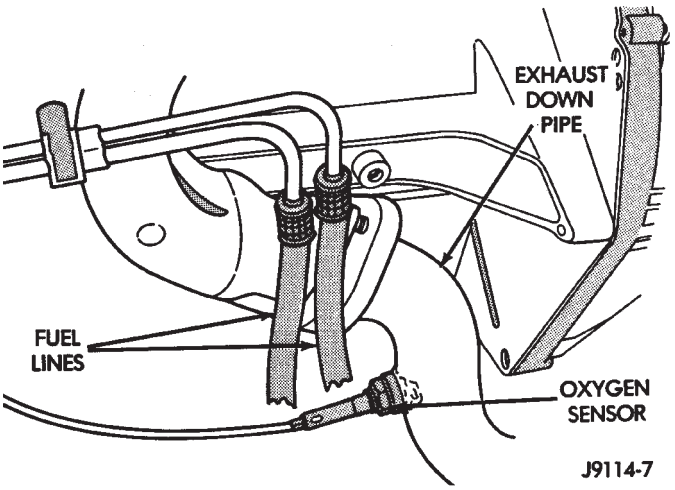

Fig. 11 Heated Oxygen Sensor Location—Typical

PARK/NEUTRAL SWITCH—PCM INPUT

The park/neutral switch is located on the transmission housing and provides an input to the powertrain control module (PCM). This will indicate that the automatic transmission is in Park, Neutral or a drive gear selection. This input is used to determine idle speed (varying with gear selection), fuel injector pulse width, ignition timing advance and vehicle speed control operation. Refer to Group 21, Transmissions, for testing, replacement and adjustment information.

POWER GROUND

The power ground is used to control ground circuits for the following powertrain control module (PCM) loads:

- Generator Field Winding
- 8 volt (PCM) power supply
- Fuel Injectors
- Ignition Coil

POWER STEERING PRESSURE SWITCH—PCM INPUT

A pressure sensing switch is included in the power steering system (mounted on the high-pressure line). This switch will be on vehicles equipped with a 2.5L engine and power steering. The switch (figure 12, YJ models or figure 13, XJ models) provides an input to the PCM. This input is provided during periods of high pump load and low engine rpm; such as during parking maneuvers. The PCM will then increase the idle speed through the idle air control (IAC) motor. This is done to prevent the engine from stalling under the increased load.

When steering pump pressure exceeds 1896 kPa ± 172 kPa (275 ± 25 psi) the PCM will increase the engine idle speed. This will prevent the engine from stalling.

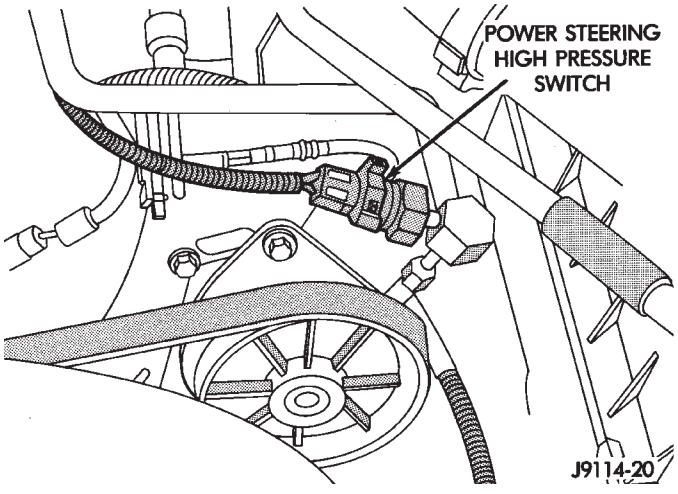

Fig. 12 Power Steering Pump Pressure Switch—YJ Models

SCI RECEIVE—PCM INPUT

SCI Receive is the serial data communication receive circuit for the DRB scan tool. The powertrain control module (PCM) receives data from the DRB through the SCI Receive circuit.

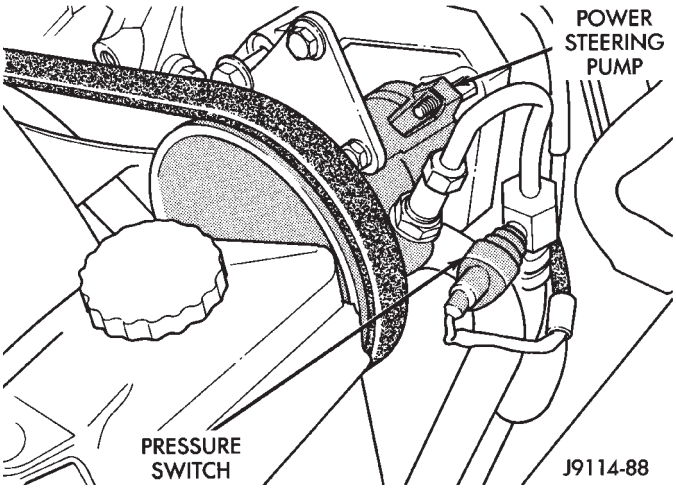

Fig. 13 Power Steering Pump Pressure Switch—XJ Models

SPEED CONTROL—PCM INPUT

The speed control system provides three separate inputs to the powertrain control module (PCM); On/Off, Set and Resume. The On/Off input informs the PCM that the speed control system has been activated. The Set input informs the PCM that a fixed vehicle speed has been selected. The Resume input indicates to the PCM that the previous fixed speed is requested.

The speed control operating range is from 50 km/h to 142 km/h (35 to 85 mph). Inputs that effect speed control operation are:

- Brake switch position
- Park/neutral switch
- Vehicle speed sensor
- Throttle position sensor

Refer to Group 8H for further speed control information.

SENSOR RETURN—PCM INPUT

Sensor Return provides a low noise ground reference for all system sensors.

THROTTLE POSITION SENSOR (TPS)—PCM INPUT

The throttle position sensor (TPS) is mounted on the throttle body (Figs. 14 or 15). The TPS is a variable resistor that provides the powertrain control module (PCM) with an input signal (voltage) that represents throttle blade position. The sensor is connected to the throttle blade shaft. As the position of the throttle blade changes, the resistance of the TPS changes.

The PCM supplies approximately 5 volts to the TPS. The TPS output voltage (input signal to the PCM) represents the throttle blade position. The PCM receives an input signal voltage from the TPS. This will vary in an approximate range of from 1 volt at minimum throttle opening (idle), to 4 volts at wide open throttle. Along with inputs from other sensors, the PCM uses the TPS input to determine current engine operating conditions. In response to engine operating conditions, the PCM will adjust fuel injector pulse width and ignition timing.

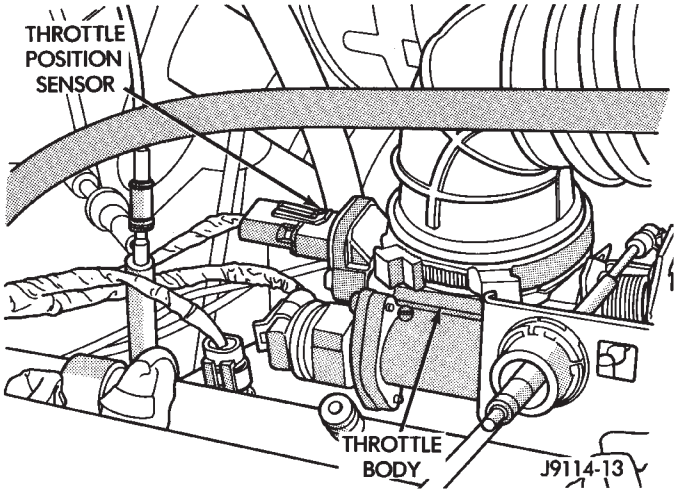

Fig. 14 Throttle Position Sensor—2.5L Engine

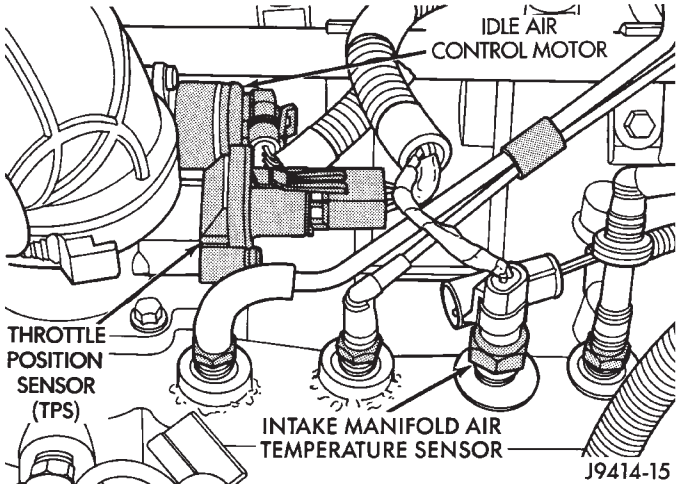

Fig. 15 Throttle Position Sensor—4.0L Engine

VEHICLE SPEED SENSOR—PCM INPUT

The vehicle speed sensor (Fig. 16) is located in the extension housing of the transmission (2 wheel drive) or on the transfer case extension housing (4 wheel drive). The sensor input is used by the powertrain control module (PCM) to determine vehicle speed and distance traveled.

The speed sensor generates 8 pulses per sensor revolution. These signals, in conjunction with a closed throttle signal from the throttle position sensor, indicate a closed throttle deceleration to the PCM. When the vehicle is stopped at idle, a closed throttle signal is received by the PCM (but a speed sensor signal is not received).

Under deceleration conditions, the PCM adjusts the idle air control (IAC) motor to maintain a desired MAP value. Under idle conditions, the PCM adjusts the IAC motor to maintain a desired engine speed.

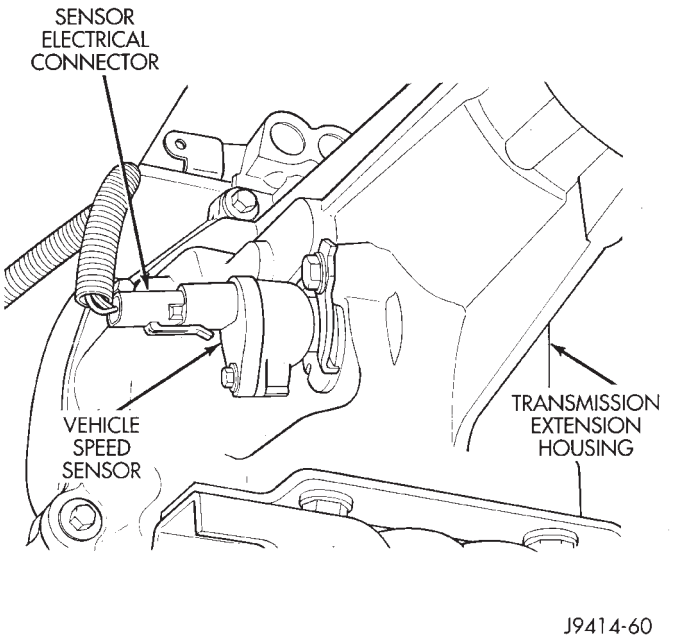

Fig. 16 Vehicle Speed Sensor—Typical

AIR CONDITIONING (A/C) CLUTCH RELAY—PCM OUTPUT

The powertrain control module (PCM) activates the A/C compressor through the A/C clutch relay. The PCM regulates A/C compressor operation by switching the ground circuit for the A/C clutch relay on and off. The relay is located in the power distribution center (PDC) (Figs. 17 or 18). For the location of the relay within the PDC, refer to label on PDC cover.

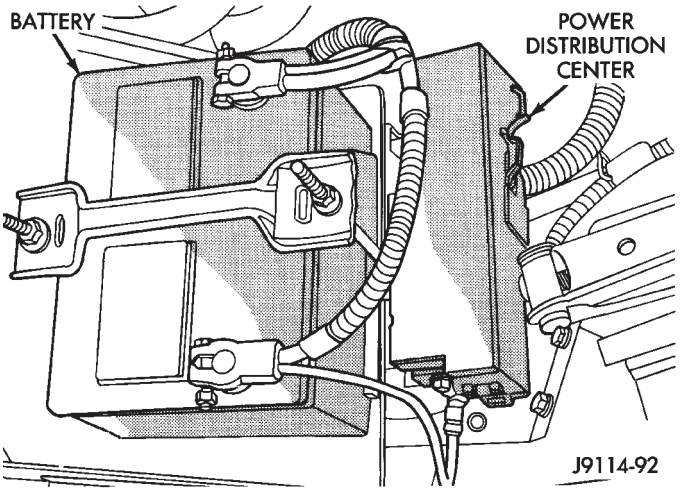

Fig. 17 PDC—YJ Models

When the PCM receives a request for A/C from A/C evaporator switch, it will adjust idle air control (IAC) motor position. This is done to increase idle speed. The PCM will then activate the A/C clutch through the A/C clutch relay. The PCM adjusts idle air control (IAC) stepper motor position to compensate for increased engine load from the A/C compressor.

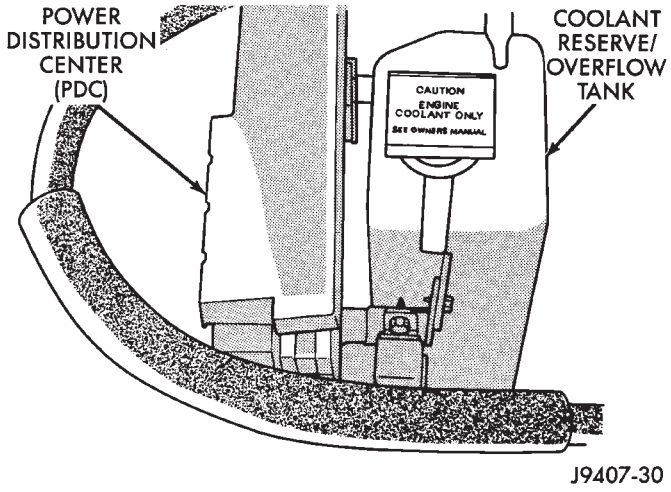

Fig. 18 PDC—XJ Models

By switching the ground path for the relay on and off, the PCM is able to cycle the A/C compressor clutch. This is based on changes in engine operating conditions. If, during A/C operation, the PCM senses low idle speeds or a wide open throttle condition, it will de-energize the relay. This prevents A/C clutch engagement. The relay will remain de-energized until the idle speed increases or the wide open throttle condition exceeds 15 seconds or no longer exists. The PCM will also de-energize the relay if coolant temperature exceeds 125°C (257°F).

AUTO SHUTDOWN (ASD) RELAY—PCM OUTPUT

The ASD relay is located in the power distribution center (PDC) (Figs. 17 or 18). For the location of this relay within the PDC, refer to label on PDC cover.

The ASD supplies battery voltage to the fuel injectors, ignition coil and generator field winding. The ground circuit for the coil in the ASD relay is controlled by the powertrain control module (PCM). The PCM operates the relay by switching the ground circuit on and off.

The fuel pump relay is controlled by the PCM through same circuit that the ASD relay is controlled.

The powertrain control module (PCM) energizes the fuel pump through the fuel pump relay. (The PCM was formerly referred to as the SBEC or engine controller). Battery voltage is applied to the relay from the ignition switch. The relay is energized when a ground is provided by the PCM. The relay is located in the power distribution center (PDC) (Figs. 17 or 18). For the location of fuel pump relay within PDC, refer to label on PDC cover.

For the 1995 model year, the ballast resistor and ballast resistor bypass relay are no longer used to control the fuel pump circuit.

DATA LINK CONNECTOR—PCM OUTPUT

Refer to the previous paragraphs on Data Link Connector—PCM Input for information.

EMR LAMP—PCM OUTPUT

The EMR (SRI) lamp is not used for the 1995 model year.

FUEL PUMP RELAY—PCM OUTPUT

The PCM energizes the fuel pump and the oxygen sensor (O2S) heating element through the fuel pump relay. Battery voltage is applied to the relay from the ignition switch. The relay is energized when a ground is provided by the PCM. Refer to Automatic Shutdown Relay for additional information.

FUEL INJECTORS—PCM OUTPUT

Six individual fuel injectors are used with the 4.0L 6-cylinder engine. Four individual fuel injectors are used with the 2.5L 4-cylinder engine. The injectors are attached to the fuel rail (Fig. 19).

The nozzle ends of the injectors are positioned into openings in the intake manifold just above the intake valve ports of the cylinder head. The engine wiring harness connector for each fuel injector is equipped with an attached numerical tag (INJ 1, INJ 2 etc.). This is used to identify each fuel injector.

The injectors are energized individually in a sequential order by the powertrain control module (PCM). The PCM will adjust injector pulse width by switching the ground path to each individual injector on and off. Injector pulse width is the period of time that the injector is energized. The PCM will adjust injector pulse width based on various inputs it receives.

During start up, battery voltage is supplied to the injectors through the ASD relay. When the engine is operating, voltage is supplied by the charging system. The PCM determines injector pulse width based on various inputs.

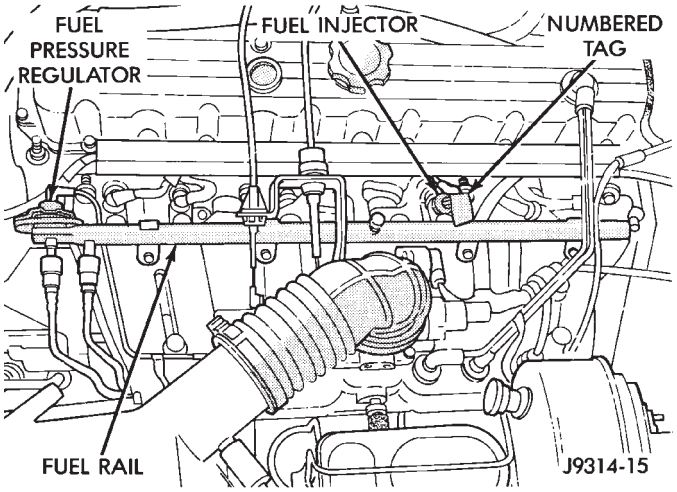

Fig. 19 Fuel Injectors—Typical

GENERATOR FIELD—PCM OUTPUT

The powertrain control module (PCM) regulates the charging system voltage within a range of 12.9 to 15.0 volts. Refer to Group 8A for charging system information.

GENERATOR LAMP—PCM OUTPUT

IF EQUIPPED

If the powertrain control module (PCM) senses a low charging condition in the charging system, it will illuminate the generator lamp on the instrument panel. For example, during low idle with all accessories turned on, the lamp may momentarily go on. Once the PCM corrects idle speed to a higher rpm, the lamp will go out. Refer to Group 8A, Battery/Starting/Charging Systems for charging system information.

IDLE AIR CONTROL (IAC) MOTOR—PCM OUTPUT

The IAC motor is mounted on the throttle body (Figs. 20 or 21) and is controlled by the powertrain control module (PCM).

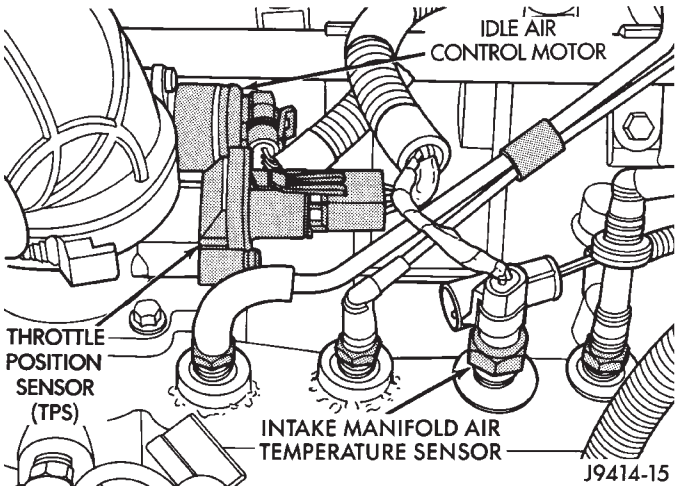

Fig. 20 IAC Motor—4.0L Engine

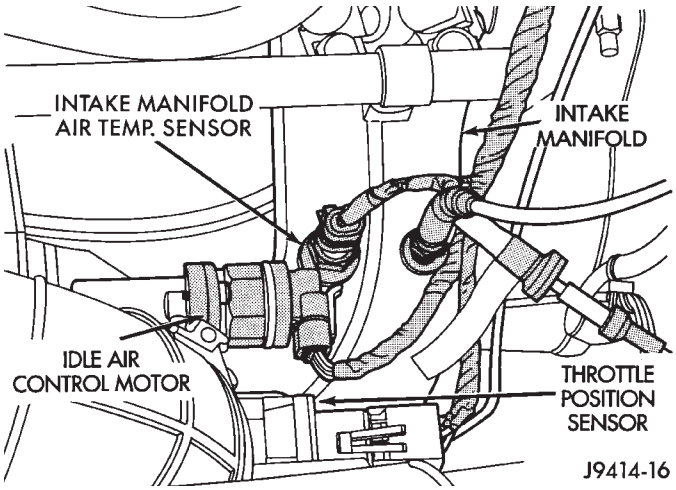

Fig. 21 IAC Motor—2.5L Engine

The throttle body has an air control passage that provides air for the engine at idle (the throttle plate is closed). The IAC motor pintle protrudes into the air control passage and regulates air flow through it. Based on various sensor inputs, the powertrain control module (PCM) adjusts engine idle speed by moving the IAC motor pintle in and out of the air control passage. The IAC motor is positioned when the ignition key is turned to the On position.

A (factory adjusted) set screw is used to mechanically limit the position of the throttle body throttle plate. **Never attempt to adjust the engine idle speed using this screw.** All idle speed functions are controlled by the PCM.

IGNITION COIL—PCM OUTPUT

System voltage is supplied to the ignition coil positive terminal. The powertrain control module (PCM) operates the ignition coil. **Base (initial) ignition timing is not adjustable.** The PCM adjusts ignition timing to meet changing engine operating conditions.

The ignition coil is located near the distributor (Fig. 22).

Refer to Group 8D, Ignition System for additional information.

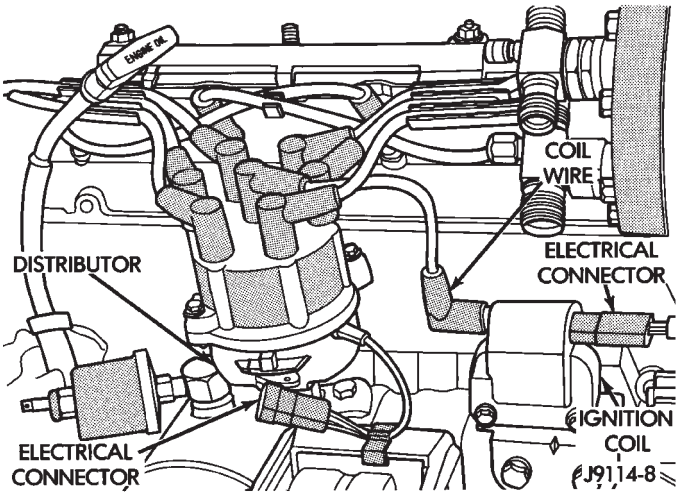

Fig. 22 Ignition Coil—Typical

MALFUNCTION INDICATOR LAMP—PCM OUTPUT

The malfunction indicator lamp illuminates each time the ignition key is turned on. It will stay on for approximately three seconds as a bulb test. The lamp is displayed on the instrument panel as the CHECK ENGINE lamp (Figs. 23 or 24).

If the powertrain control module (PCM) receives an incorrect signal, or no signal from certain sensors or emission related systems, the lamp is turned on. This is a warning that the PCM has recorded a system or sensor malfunction. In some cases, when a problem is declared, the PCM will go into a limp-in mode. This is an attempt to keep the system operating. It signals an immediate need for service.

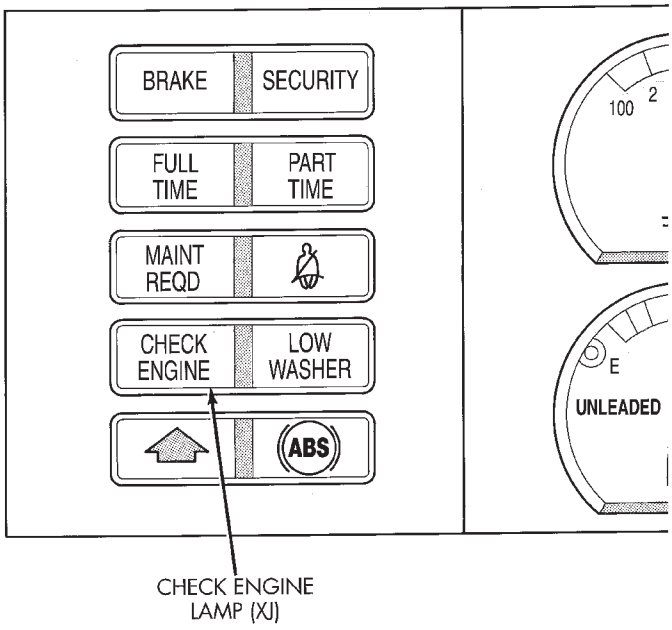

Fig. 23 Check Engine Lamp—XJ Models—Typical

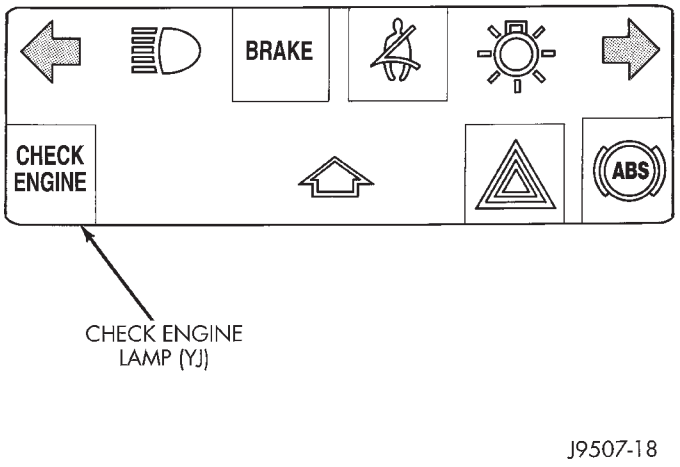

Fig. 24 Check Engine Lamp—YJ Models—Typical

The lamp can also be used to display a Diagnostic Trouble Code (DTC). Cycle the ignition switch On-Off-On-Off-On within three seconds and any codes stored in the PCM memory will be displayed. This is done in a series of flashes representing digits. Refer to On-Board Diagnostics in the General Diagnosis section of this group for more information.

RADIATOR FAN RELAY—PCM OUTPUT

XJ MODELS ONLY

The electric radiator cooling fan used in XJ models (equipped with 4.0L engine, heavy duty cooling and/or air conditioning) is controlled by the powertrain control module (PCM) through radiator fan relay. The relay is energized when coolant temperature is above 103°C (217°F). It will then de-energize when

coolant temperature drops to 98°C (208°F). Refer to Group 7, Cooling Systems for more information.

The relay is located in the power distribution center (PDC) (Fig. 25).

The electric radiator cooling fan is not used on YJ models.

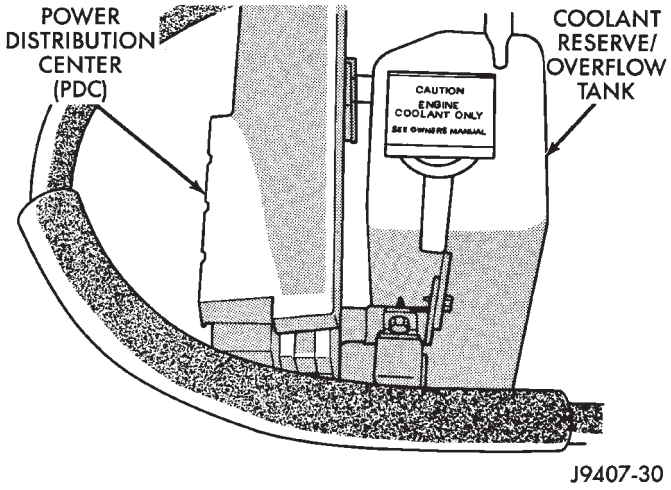

Fig. 25 PDC—XJ Models

SCI TRANSMIT—PCM OUTPUT

SCI Transmit is the serial data communication transmit circuit for the DRB scan tool. The powertrain control module (PCM) transmits data to the DRB through the SCI Transmit circuit.

SHIFT INDICATOR—PCM OUTPUT

Vehicles equipped with manual transmissions have an Up-Shift indicator lamp. The lamp is controlled by the powertrain control module (PCM). The lamp illuminates on the instrument panel to indicate when the driver should shift to the next highest gear for best fuel economy. The PCM will turn the lamp OFF after 3 to 5 seconds if the shift of gears is not performed. The up-shift lamp will remain off until vehicle stops accelerating and is brought back to range of up-shift lamp operation. This will also happen if vehicle is shifted into fifth gear.

The indicator lamp is normally illuminated when the ignition switch is turned on and it is turned off when the engine is started up. With the engine running, the lamp is turned on/off depending upon engine speed and load.

SPEED CONTROL—PCM OUTPUT

Speed control operation is regulated by the powertrain control module (PCM). The PCM controls the vacuum to the throttle actuator through the speed control vacuum and vent solenoids. Refer to Group 8H for speed control information.

TACHOMETER—PCM OUTPUT

The powertrain control module (PCM) supplies engine rpm values to the instrument cluster tachometer (if equipped). Refer to Group 8E for tachometer information.

TORQUE CONVERTER CLUTCH RELAY—PCM OUTPUT

ALL 2.5L 4 CYL. WITH 3-SPEED AUTO. TRANS

4.0L 6 CYL. YJ MODELS WITH 3-SPEED AUTO. TRANS

The transmission mounted torque converter clutch (TCC) solenoid is used to control the torque converter. The solenoid is controlled through the powertrain control module (PCM) and by the TCC relay. This relay is used only on vehicles equipped with a 3-speed automatic transmission.

An electrical output signal is sent from the PCM to the TCC relay after the PCM receives information from the vehicle speed, MAP, throttle position and engine coolant temperature sensors. After the TCC relay receives this necessary information, it will send a signal to the torque converter clutch solenoid to control the torque converter.

On YJ models the TCC relay is located in the engine compartment, on the cowl panel and near the battery (Fig. 26). On XJ models the TCC relay is located in the power distribution center (PDC) (Fig. 25).

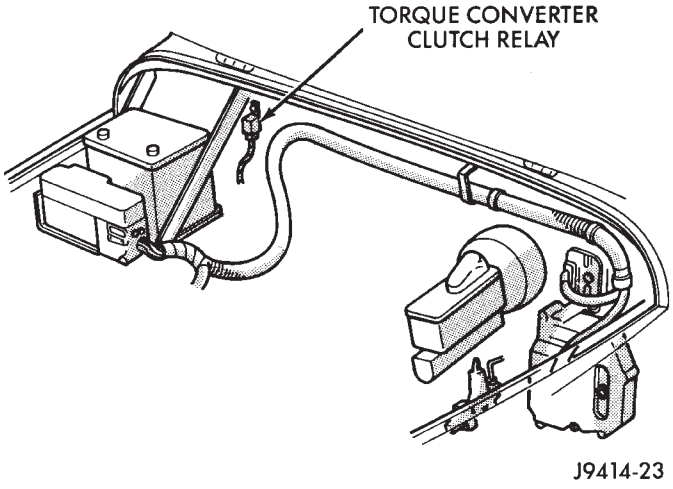

Fig. 26 TCC Relay Location—YJ Models

AIR CLEANER

The air cleaner assembly used on all models (Figs. 27 or 28) is open to ambient air. The blend air door and vacuum motor that was used on engines of previous model years to supply heated air, is no longer used. The air cleaner housing contains the engine air cleaner element.

The powertrain control module (PCM) monitors air temperature in the intake manifold through the intake manifold air temperature sensor. The PCM adjusts injector pulse width and ignition timing to compensate for intake manifold air temperature. Refer to Powertrain Control Module (PCM) for more information.

For removal and installation procedures of both the air cleaner housing and the air cleaner element, refer to the Component Removal/Installation section of this group

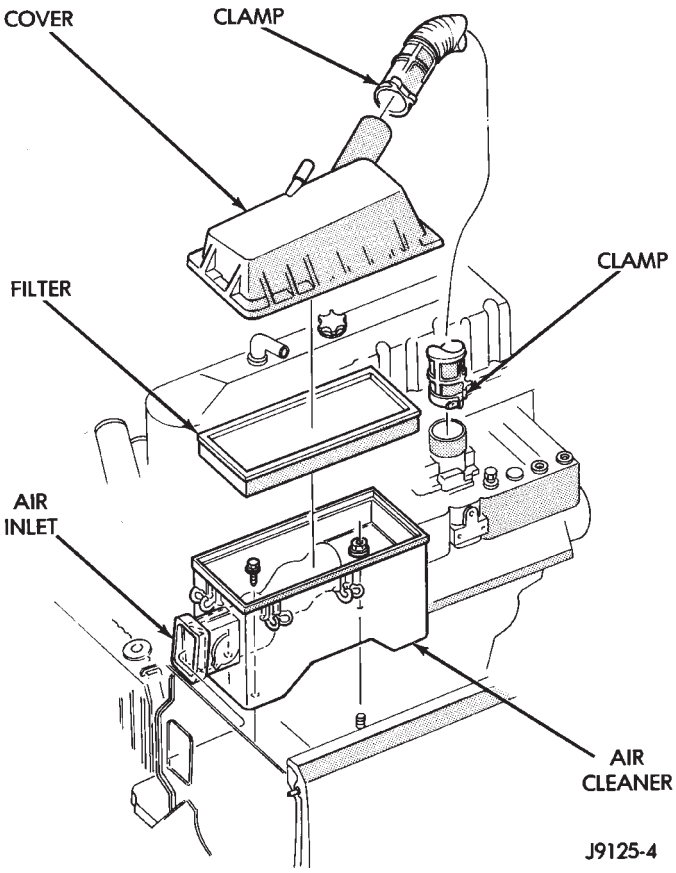

Fig. 27 Air Cleaner—XJ Models—Typical

OPEN LOOP/CLOSED LOOP MODES OF OPERATION

As input signals to the powertrain control module (PCM) change, the PCM adjusts its response to the output devices. For example, the PCM must calculate different injector pulse width and ignition timing for idle than it does for wide open throttle (WOT). There are several different modes of operation that determine how the PCM responds to the various input signals.

MODES

- Open Loop
- Closed Loop

During Open Loop modes, the powertrain control module (PCM) receives input signals and responds only according to preset PCM programming. Input from the oxygen (O2S) sensor is not monitored during Open Loop modes.

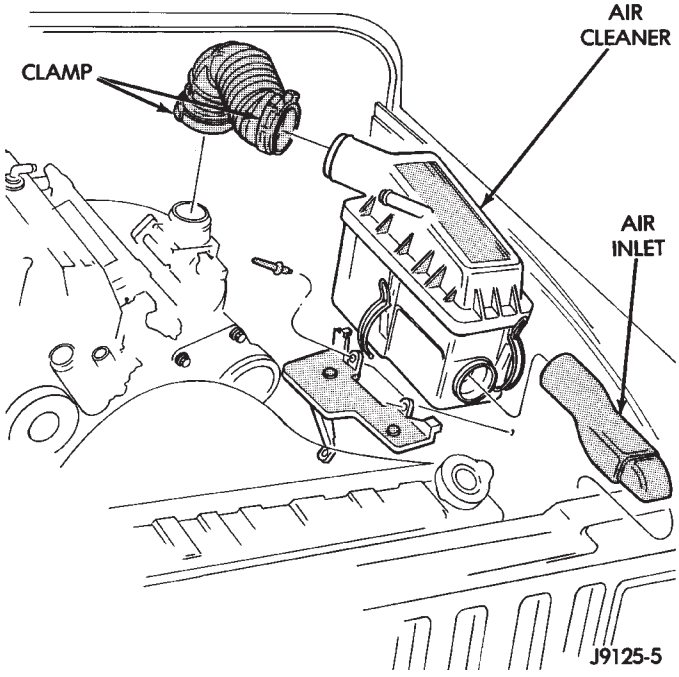

Fig. 28 Air Cleaner—YJ Models—Typical

During Closed Loop modes, the PCM will monitor the oxygen (O2S) sensor input. This input indicates to the PCM whether or not the calculated injector pulse width results in the ideal air-fuel ratio. This ratio is 14.7 parts air-to-1 part fuel. By monitoring the exhaust oxygen content through the O2S sensor, the PCM can fine tune the injector pulse width. This is done to achieve optimum fuel economy combined with low emission engine performance.

The fuel injection system has the following modes of operation:

- Ignition switch ON
- Engine start-up (crank)
- Engine warm-up
- Idle
- Cruise
- Acceleration
- Deceleration
- Wide open throttle (WOT)
- Ignition switch OFF

The ignition switch On, engine start-up (crank), engine warm-up, acceleration, deceleration and wide open throttle modes are Open Loop modes. The idle and cruise modes, (with the engine at operating temperature) are Closed Loop modes.

IGNITION SWITCH (KEY-ON) MODE

This is an Open Loop mode. When the fuel system is activated by the ignition switch, the following actions occur:

• The powertrain control module (PCM) pre-positions the idle air control (IAC) motor.
• The PCM determines atmospheric air pressure from the MAP sensor input to determine basic fuel strategy.
• The PCM monitors the engine coolant temperature sensor input. The PCM modifies fuel strategy based on this input.
• Intake manifold air temperature sensor input is monitored
• Throttle position sensor (TPS) is monitored
• The auto shutdown (ASD) relay is energized by the PCM for approximately three seconds.
• The fuel pump is energized through the fuel pump relay by the PCM. The fuel pump will operate for approximately three seconds unless the engine is operating or the starter motor is engaged
• The O2S sensor heater element is energized through the fuel pump relay. The O2S sensor input is not used by the PCM to calibrate air-fuel ratio during this mode of operation.
• The up-shift indicator lamp is illuminated (manual transmission only).

ENGINE START-UP MODE

This is an Open Loop mode. The following actions occur when the starter motor is engaged.

The powertrain control module (PCM) receives inputs from:
• Battery voltage
• Engine coolant temperature sensor
• Crankshaft position sensor
• Intake manifold air temperature sensor
• Manifold absolute pressure (MAP) sensor
• Throttle position sensor (TPS)
• Starter motor relay
• Camshaft position sensor signal

The PCM monitors the crankshaft position sensor. If the PCM does not receive a crankshaft position sensor signal within 3 seconds of cranking the engine, it will shut down the fuel injection system.

The fuel pump is activated by the PCM through the fuel pump relay.

Voltage is applied to the fuel injectors with the PCM. The PCM will then control the injection sequence and injector pulse width by turning the ground circuit to each individual injector on and off.

The PCM determines the proper ignition timing according to input received from the crankshaft position sensor.

ENGINE WARM-UP MODE

This is an Open Loop mode. During engine warm-up, the powertrain control module (PCM) receives inputs from:
• Battery voltage
• Crankshaft position sensor
• Engine coolant temperature sensor
• Intake manifold air temperature sensor
• Manifold absolute pressure (MAP) sensor
• Throttle position sensor (TPS)
• Camshaft position sensor signal (in the distributor)
• Park/neutral switch (gear indicator signal—auto. trans. only)
• Air conditioning select signal (if equipped)
• Air conditioning request signal (if equipped)

Based on these inputs the following occurs:
• Voltage is applied to the fuel injectors with the powertrain control module (PCM). The PCM will then control the injection sequence and injector pulse width by turning the ground circuit to each individual injector on and off.
• The PCM adjusts engine idle speed through the idle air control (IAC) motor and adjusts ignition timing.
• The PCM operates the A/C compressor clutch through the clutch relay. This is done if A/C has been selected by the vehicle operator and requested by the A/C thermostat.
• If the vehicle has a manual transmission, the upshift lamp is operated by the PCM.
• When engine has reached operating temperature, the PCM will begin monitoring O2S sensor input. The system will then leave the warm-up mode and go into closed loop operation.

IDLE MODE

When the engine is at operating temperature, this is a Closed Loop mode. At idle speed, the powertrain control module (PCM) receives inputs from:
• Air conditioning select signal (if equipped)
• Air conditioning request signal (if equipped)
• Battery voltage
• Crankshaft position sensor
• Engine coolant temperature sensor
• Intake manifold air temperature sensor
• Manifold absolute pressure (MAP) sensor
• Throttle position sensor (TPS)
• Camshaft position sensor signal (in the distributor)
• Battery voltage
• Park/neutral switch (gear indicator signal—auto. trans. only)
• Oxygen sensor

Based on these inputs, the following occurs:
• Voltage is applied to the fuel injectors with the powertrain control module (PCM). The PCM will then control injection sequence and injector pulse width by turning the ground circuit to each individual injector on and off.
• The PCM monitors the O2S sensor input and adjusts air-fuel ratio by varying injector pulse width. It also adjusts engine idle speed through the idle air control (IAC) motor.

• The PCM adjusts ignition timing by increasing and decreasing spark advance.
• The PCM operates the A/C compressor clutch through the clutch relay. This happens if A/C has been selected by the vehicle operator and requested by the A/C thermostat.

The optional Extended Idle Switch is used to raise the engine idle speed to approximately 1000 rpm. This is when the shifter is in either the Park or Neutral position. A rocker-type 2-wire switch (extended idle switch) is mounted to the instrument panel. This switch will supply a ground circuit to the powertrain control module (PCM). **The switch is available only with 4.0L engine when supplied with the optional police package.**

CRUISE MODE

When the engine is at operating temperature, this is a Closed Loop mode. At cruising speed, the powertrain control module (PCM) receives inputs from:
• Air conditioning select signal (if equipped)
• Air conditioning request signal (if equipped)
• Battery voltage
• Engine coolant temperature sensor
• Crankshaft position sensor
• Intake manifold air temperature sensor
• Manifold absolute pressure (MAP) sensor
• Throttle position sensor (TPS)
• Camshaft position sensor signal (in the distributor)
• Park/neutral switch (gear indicator signal—auto. trans. only)
• Oxygen (O2S) sensor

Based on these inputs, the following occurs:
• Voltage is applied to the fuel injectors with the PCM. The PCM will then adjust the injector pulse width by turning the ground circuit to each individual injector on and off.
• The PCM monitors the O2S sensor input and adjusts air-fuel ratio. It also adjusts engine idle speed through the idle air control (IAC) motor.
• The PCM adjusts ignition timing by turning the ground path to the coil on and off.
• The PCM operates the A/C compressor clutch through the clutch relay. This happens if A/C has been selected by the vehicle operator and requested by the A/C thermostat.

ACCELERATION MODE

This is an Open Loop mode. The powertrain control module (PCM) recognizes an abrupt increase in throttle position or MAP pressure as a demand for increased engine output and vehicle acceleration. The PCM increases injector pulse width in response to increased throttle opening.

DECELERATION MODE

When the engine is at operating temperature, this is an Open Loop mode. During hard deceleration, the powertrain control module (PCM) receives the following inputs.
• Air conditioning select signal (if equipped)
• Air conditioning request signal (if equipped)
• Battery voltage
• Engine coolant temperature sensor
• Crankshaft position sensor
• Intake manifold air temperature sensor
• Manifold absolute pressure (MAP) sensor
• Throttle position sensor (TPS)
• Camshaft position sensor signal (in the distributor)
• Park/neutral switch (gear indicator signal—auto. trans. only)

If the vehicle is under hard deceleration with the proper rpm and closed throttle conditions, the PCM will ignore the oxygen sensor input signal. The PCM will enter a fuel cut-off strategy in which it will not supply battery voltage to the injectors. If a hard deceleration does not exist, the PCM will determine the proper injector pulse width and continue injection.

Based on the above inputs, the PCM will adjust engine idle speed through the idle air control (IAC) motor.

The PCM adjusts ignition timing by turning the ground path to the coil on and off.

The PCM opens the ground circuit to the A/C clutch relay to disengage the A/C compressor clutch. This is done until the vehicle is no longer under deceleration (if the A/C system is operating).

WIDE OPEN THROTTLE MODE

This is an Open Loop mode. During wide open throttle operation, the powertrain control module (PCM) receives the following inputs.
• Battery voltage
• Crankshaft position sensor
• Engine coolant temperature sensor
• Intake manifold air temperature sensor
• Manifold absolute pressure (MAP) sensor
• Throttle position sensor (TPS)
• Camshaft position sensor signal (in the distributor)

During wide open throttle conditions, the following occurs:
• Voltage is applied to the fuel injectors with the powertrain control module (PCM). The PCM will then control the injection sequence and injector pulse width by turning the ground circuit to each individual injector on and off. The PCM ignores the oxygen sensor input signal and provides a predetermined amount of additional fuel. This is done by adjusting injector pulse width.
• The PCM adjusts ignition timing by turning the ground path to the coil on and off.

• The PCM opens the ground circuit to the A/C clutch relay to disengage the A/C compressor clutch. This will be done for approximately 15 seconds (if the air conditioning system is operating).

If the vehicle has a manual transmission, the upshift lamp is operated by the PCM.

IGNITION SWITCH OFF MODE

When ignition switch is turned to OFF position, the PCM stops operating the injectors, ignition coil, ASD relay and fuel pump relay.

THROTTLE BODY

Filtered air from the air cleaner enters the intake manifold through the throttle body (Fig. 29). Fuel does not enter the intake manifold through the throttle body. Fuel is sprayed into the manifold by the fuel injectors. The throttle body is mounted on the intake manifold. It contains an air control passage (Fig. 30) controlled by an Idle Air Control (IAC) motor. The air control passage is used to supply air for idle conditions. A throttle valve (plate) is used to supply air for above idle conditions.

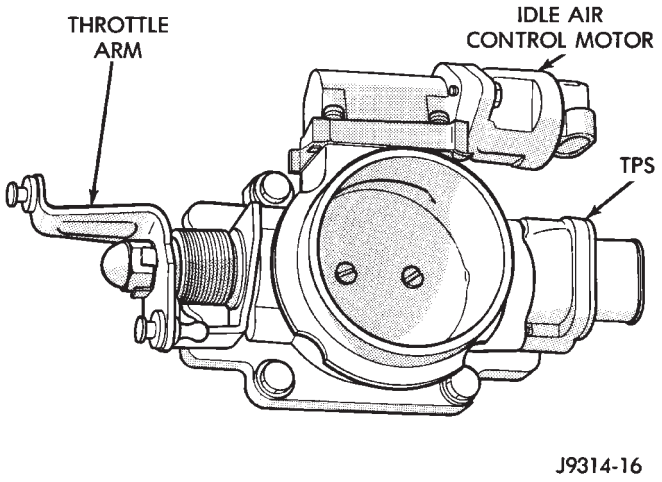

Fig. 29 Throttle Body—Typical

The throttle position sensor (TPS) and idle air control (IAC) motor are attached to the throttle body. The accelerator pedal cable, speed control cable and transmission control cable (when equipped) are connected to the throttle arm.

A (factory adjusted) set screw is used to mechanically limit the position of the throttle body throttle plate. **Never attempt to adjust the engine idle speed using this screw.** All idle speed functions are controlled by the PCM.

FUEL RAIL

The fuel rail supplies fuel to the injectors and is mounted to the intake manifold (Fig. 31). The fuel pressure regulator is attached to the rail and the fuel pressure test port is integral with the rail. The fuel rail is not repairable.

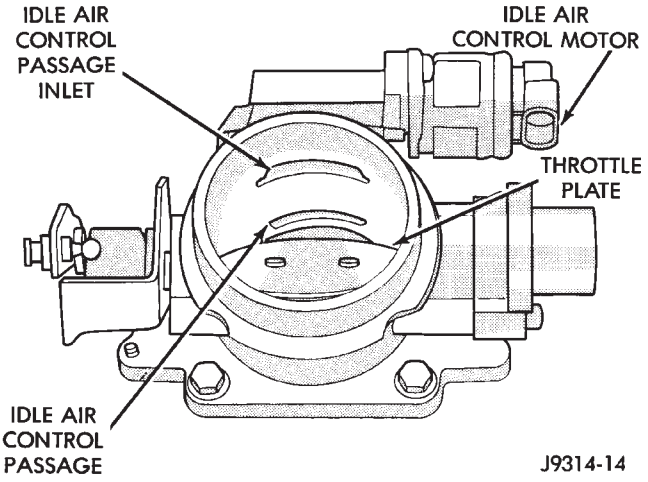

Fig. 30 Idle Air Control Passage

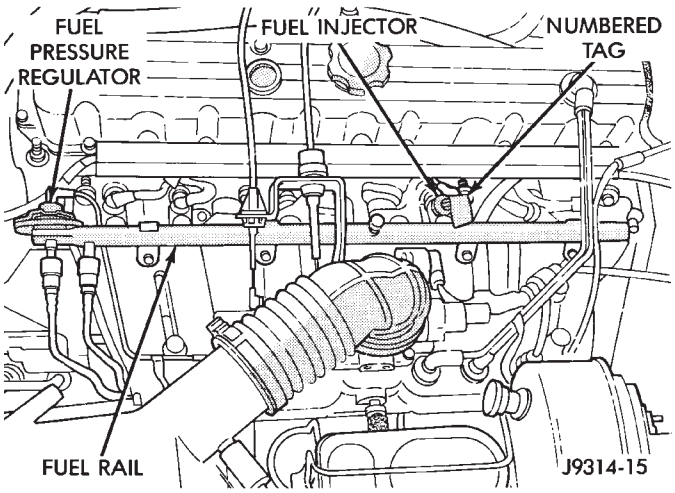

Fig. 31 Fuel Rail—Typical

FUEL PRESSURE REGULATOR

The fuel pressure regulator (Fig. 32) is a mechanical device that is not controlled by the powertrain control module (PCM).

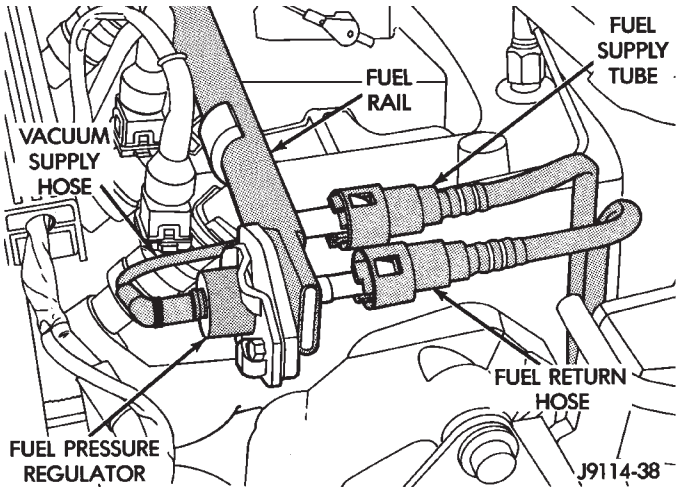

Fig. 32 Fuel Pressure Regulator—Typical

The fuel pressure regulator used is a vacuum balanced, nonadjustable type. The regulator is mounted on the output end of the fuel rail and is connected to intake manifold vacuum. The fuel return tube (to the fuel tank) is connected to the fuel pressure regulator.

The regulator is calibrated to maintain fuel system pressure at approximately 214 kPa (31 psi). This is with vacuum applied while the engine is at idle. Fuel pressure will be 55-69 kPa (8-10 psi) higher if vacuum is not applied to the regulator.

The pressure regulator contains a diaphragm, calibrated spring and a fuel return valve (Fig. 33). Fuel pressure operates on one side of the regulator, while spring pressure and intake manifold vacuum operate on the other side. Spring pressure on one side of the diaphragm tries to force the return valve closed. Fuel pressure on other side of diaphragm, with assistance from manifold vacuum on spring side of diaphragm, act against spring pressure to open the return valve. System fuel pressure is the amount of fuel pressure required to force against spring pressure and unseat the return valve.

Without vacuum applied to the spring side of the regulator, the spring is calibrated to open the fuel return outlet. This happens when the pressure differential between the fuel injectors and the intake manifold reaches approximately 269 kPa (39 psi). Since manifold vacuum varies with engine operating conditions, the amount of vacuum applied to the spring side of the diaphragm varies. For this reason, fuel pressure varies, depending upon intake manifold vacuum. With low vacuum, such as during wide open throttle conditions, minimal vacuum assistance is available. Full spring pressure is exerted to seal the fuel outlet. This causes the system pressure to increase. With high vacuum, such as at engine idle or during vehicle deceleration, fuel pressure on one side of the diaphragm is balanced by intake manifold pressure. This is done on the spring side of the diaphragm and results in lower system fuel pressure.

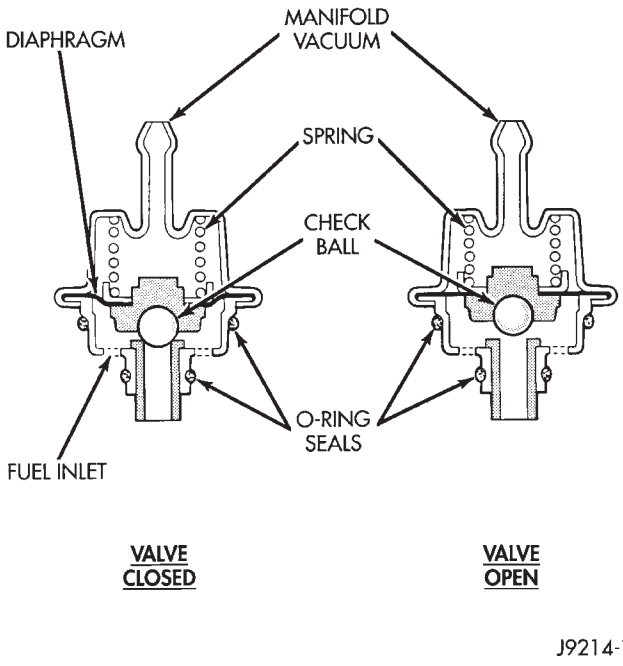

Fig. 33 Fuel Pressure Regulator Operation—Typical

MULTI-PORT FUEL INJECTION (MFI)—GENERAL DIAGNOSIS

INDEX

	page
Automatic Shutdown (ASD) Relay Testing	46
Camshaft Position Sensor Test	46
Crankshaft Position Sensor Test	47
Diagnostic Trouble Code (DTC)	54
DRB Scan Tool	54
Engine Coolant Temperature Sensor Test	46
Extended Idle Switch Test	48
Fuel Injector Test	51
Fuel Pump Relay Testing	47
Fuel System Pressure Test	51
General Information	35
Idle Air Control Motor Test	49
Intake Manifold Air Temperature Sensor Test	46
Manifold Absolute Pressure (Map) Sensor Test	47
On-Board Diagnostics (OBD)	51
Oxygen Sensor (O2S) Heating Element Test	48
Pcm System Schematics	41
Powertrain Control Module (PCM) 60-Way Connector	40
Relays—Operation/Testing	50
Starter Motor Relay Test	51
Throttle Position Sensor (TPS) Test	48
Torque Converter Clutch Relay Test	48
Vehicle Speed Sensor Test	48
Visual Inspection	35

GENERAL INFORMATION

All 2.5L 4-cylinder and 4.0L 6-cylinder engines are equipped with sequential Multi-Port Fuel Injection (MFI). The MFI system provides precise air/fuel ratios for all driving conditions.

VISUAL INSPECTION

A visual inspection for loose, disconnected, or incorrectly routed wires and hoses should be made. This should be done before attempting to diagnose or service the fuel injection system. A visual check will help spot these faults and save unnecessary test and diagnostic time. A thorough visual inspection will include the following checks:

(1) Verify that the 60-way connector is fully inserted into the connector of the powertrain control module (PCM) (Figs. 1 or 2). Verify that the connector mounting bolt is tightened to 4 N·m (35 in. lbs.) torque.

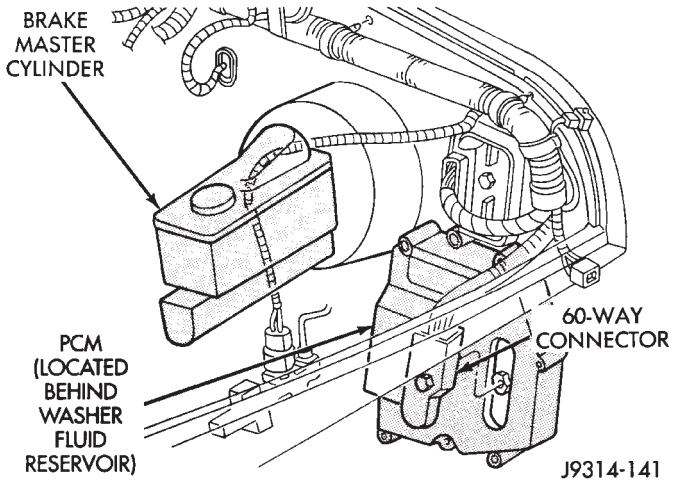

Fig. 1 PCM—YJ Models

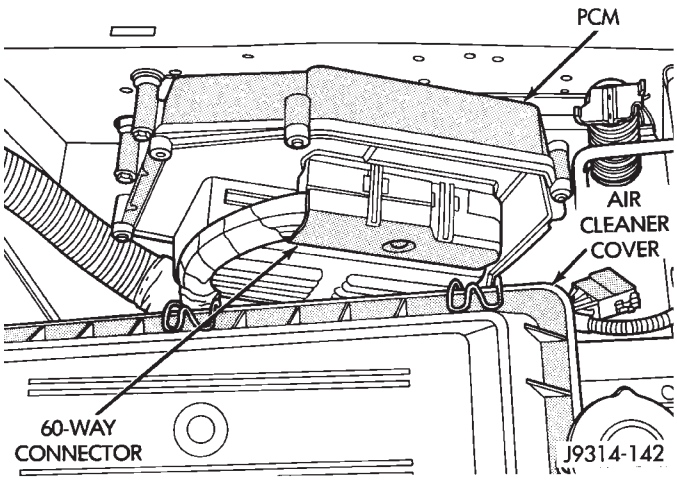

Fig. 2 PCM—XJ Models

(2) Inspect the battery cable connections. Be sure they are clean and tight.

(3) Inspect fuel pump relay and air conditioning compressor clutch relay (if equipped). Inspect ASD relay and radiator fan relay (if equipped) connections. Inspect starter motor relay connections. Inspect relays for signs of physical damage and corrosion. The relays are installed in the power distribution center (PDC) (Figs. 3 or 4).

(4) Inspect ignition coil connections. Verify that coil secondary cable is firmly connected to coil (Figs. 5 or 6).

(5) Verify that distributor cap is correctly attached to distributor. Be sure that spark plug cables are firmly connected to the distributor cap and the spark plugs in their correct firing order. Be sure that coil cable is firmly connected to distributor cap and coil. Be sure that camshaft position sensor wire connector is firmly connected to harness connector (Figs. 7 or 8). Inspect spark plug condition. Refer to Group 8D,

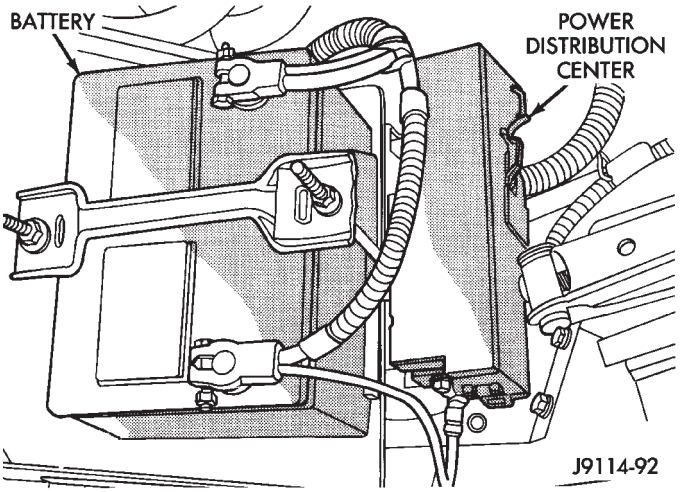

Fig. 3 PDC—YJ Models

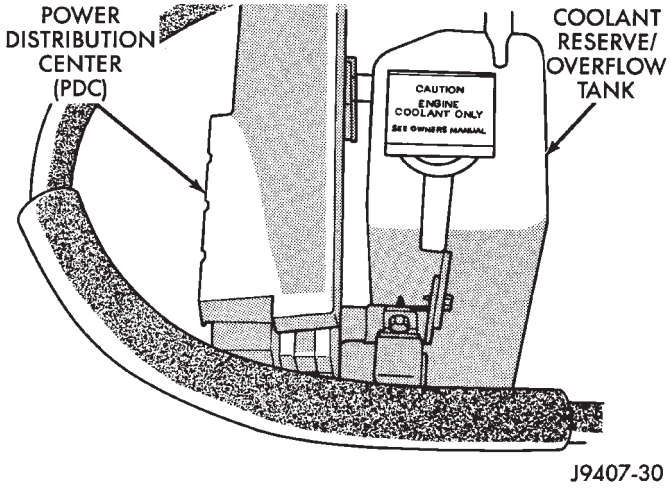

Fig. 4 PDC—XJ Models

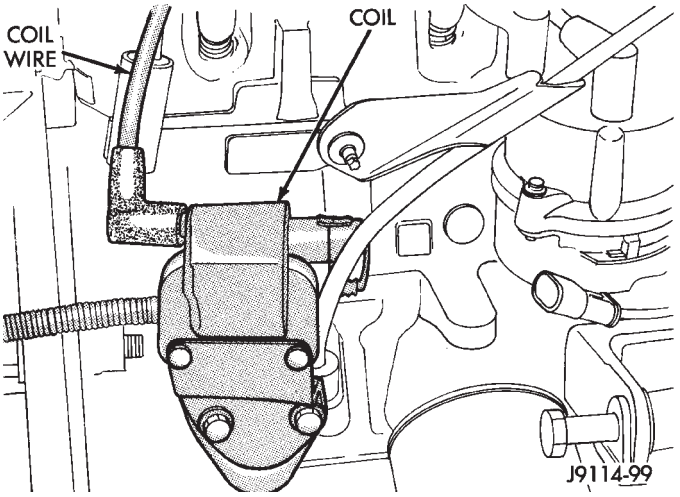

Fig. 5 Ignition Coil—2.5L Engine—Typical

Ignition System. Connect vehicle to an oscilloscope and inspect spark events for fouled or damaged spark plugs or cables.

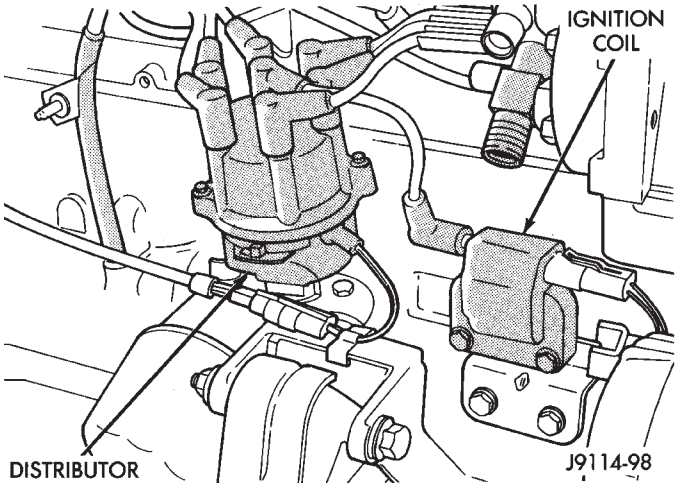

Fig. 6 Ignition Coil—4.0L Engine—Typical

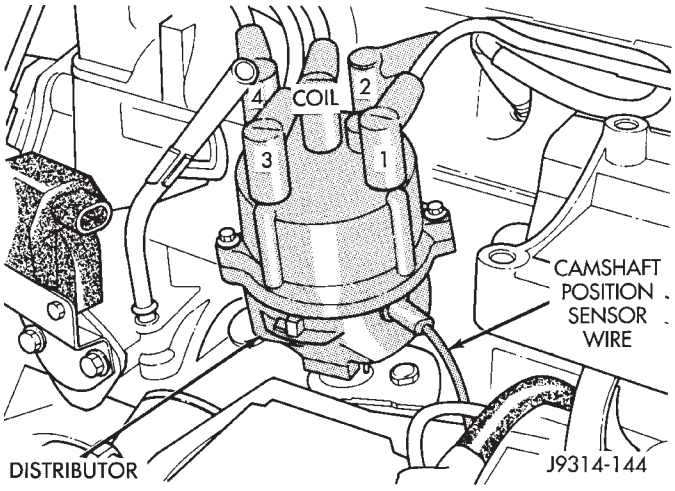

Fig. 7 Distributor and Wiring—2.5L Engine—Typical

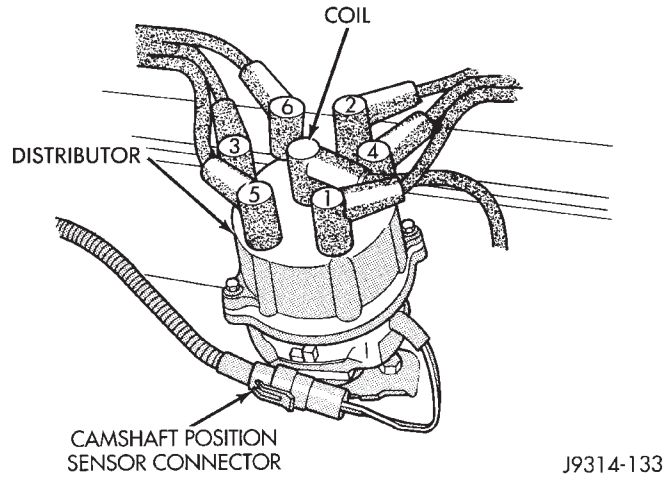

Fig. 8 Distributor and Wiring—4.0L Engine—Typical

(6) Verify that generator output wire, generator connector and ground wire are firmly connected to the generator (Fig. 9).

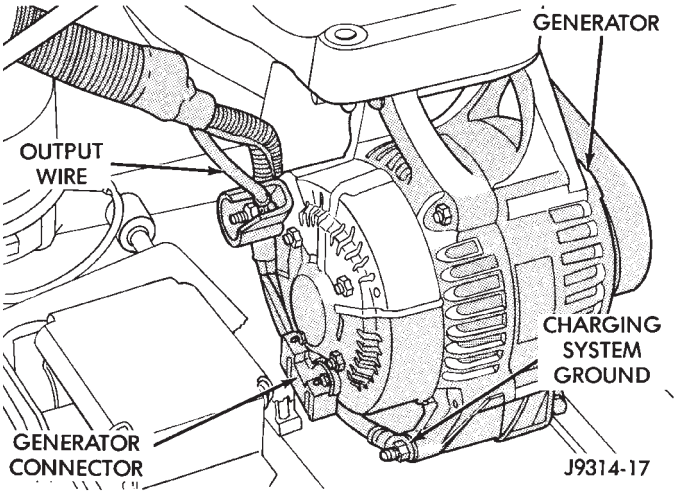

Fig. 9 Generator Connector and Output Wire Connections—Typical

(7) Inspect the system ground connections at the engine (Fig. 10). For location of system grounds, refer to Group 8, Wiring.

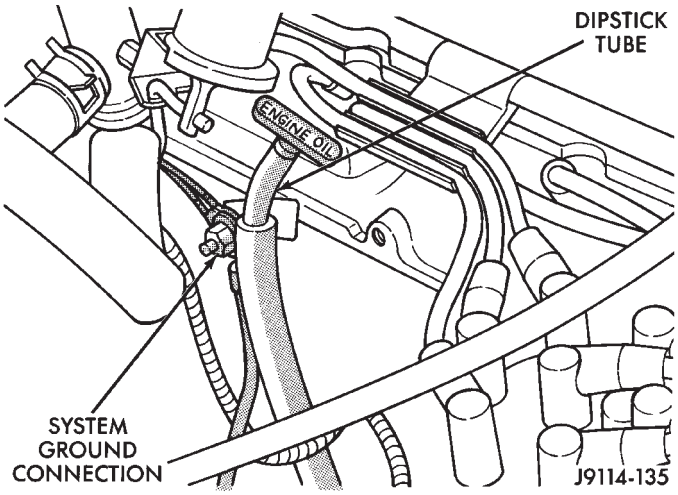

Fig. 10 System Ground Connections—Typical

(8) Verify that crankcase ventilation (CCV) fresh air hose is firmly connected to cylinder head and air cleaner covers (Figs. 11 or 12).

(9) Verify that vacuum hose is firmly connected to fuel pressure regulator and manifold fitting (Figs. 13 or 14).

(10) Inspect fuel tube quick-connect fitting-to-fuel rail connections (Fig. 15).

(11) Verify that hose connections to all ports of vacuum fittings on intake manifold are tight and not leaking.

(12) Inspect accelerator cable, transmission throttle cable (if equipped) and cruise control cable connections (if equipped). Check their connections to the throttle arm of throttle body for any binding or restrictions (Fig. 16).

(13) If equipped with vacuum brake booster, verify that vacuum booster hose is firmly connected to fitting on intake manifold. Also check connection to brake vacuum booster (Fig. 17).

(14) On XJ models equipped with: a 4.0L 6-cylinder engine, heavy duty cooling system and/or A/C,

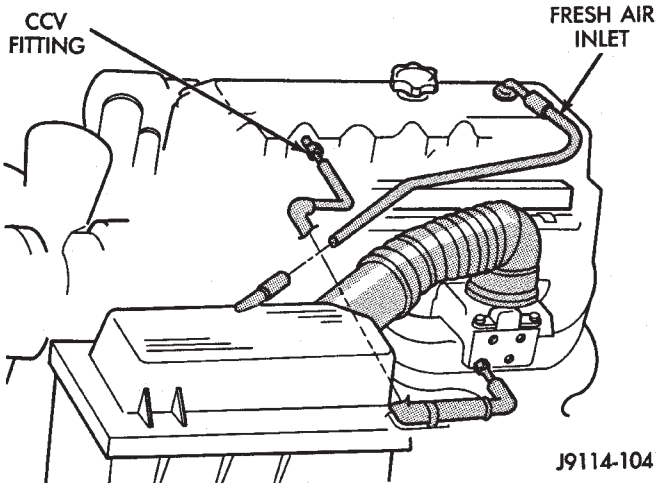

Fig. 11 CCV System—2.5L Engine

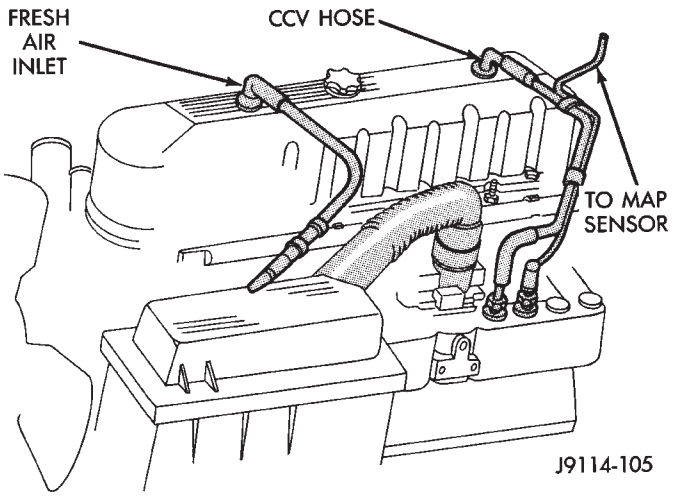

Fig. 12 CCV System—4.0L Engine

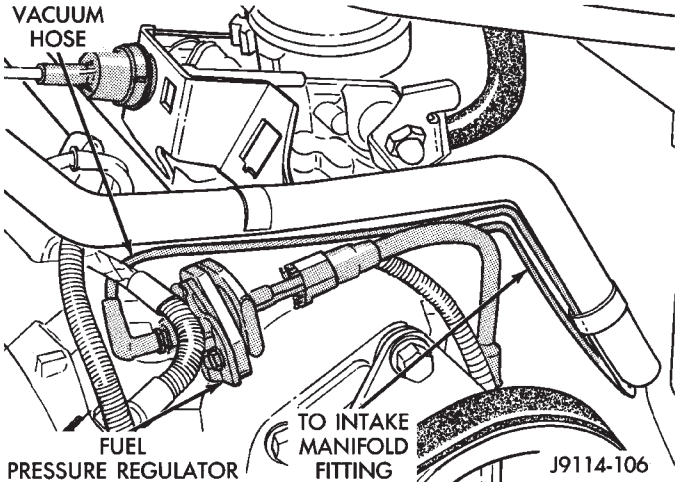

Fig. 13 Pressure Regulator Vacuum Hose—2.5L Engine

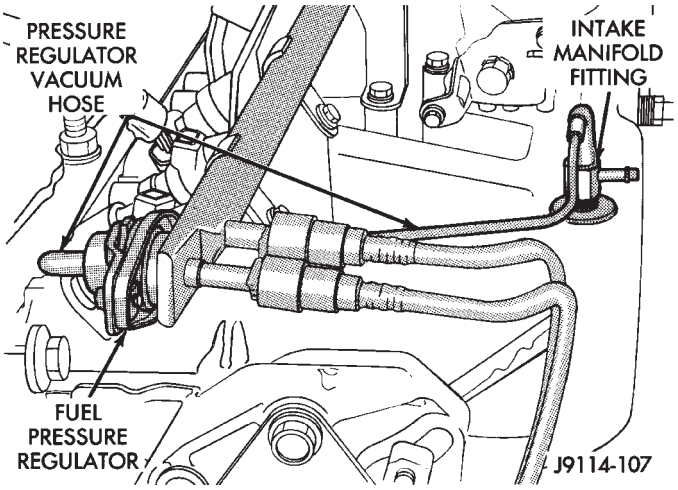

Fig. 14 Pressure Regulator Vacuum Hose—4.0L Engine

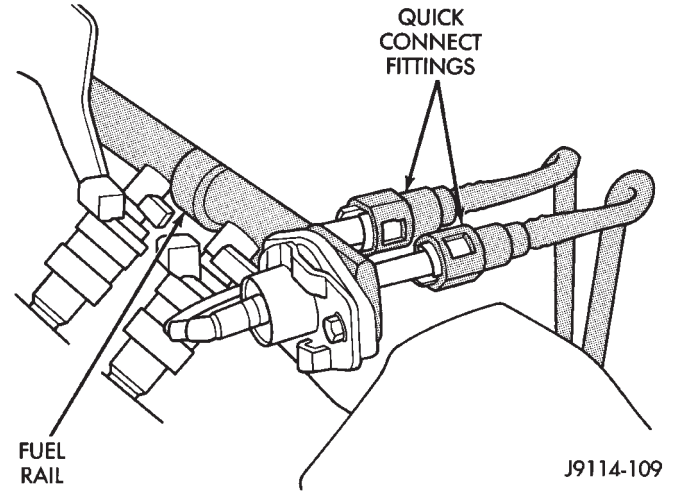

Fig. 15 Fuel Supply Tube—Typical

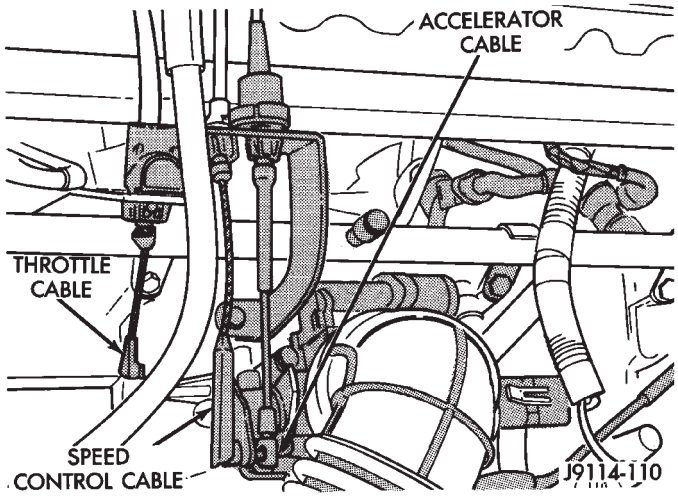

Fig. 16 Throttle Body Cables—Typical

verify that auxiliary radiator cooling fan wire connector is firmly connected to harness.

(15) Inspect the air cleaner inlet and air cleaner element for restrictions.

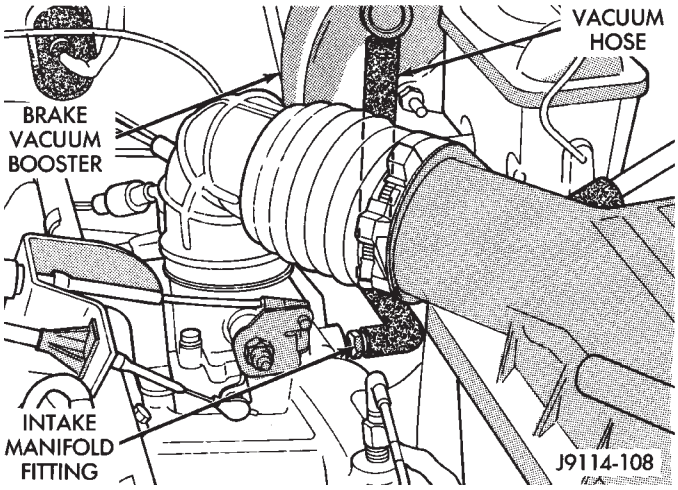

Fig. 17 Brake Vacuum Booster Hose—Typical

(16) Inspect radiator grille area, radiator fins and air conditioning condenser for restrictions.

(17) Verify that intake manifold air temperature sensor wire connector is firmly connected to harness connector (Figs. 18 or 19).

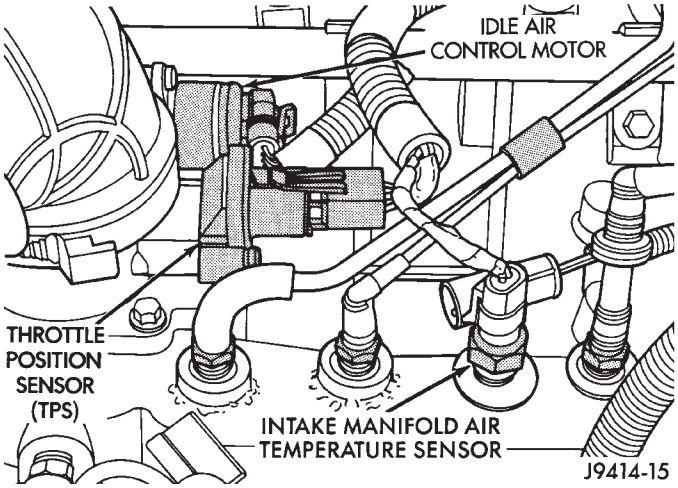

Fig. 18 Sensor Location—4.0L Engine

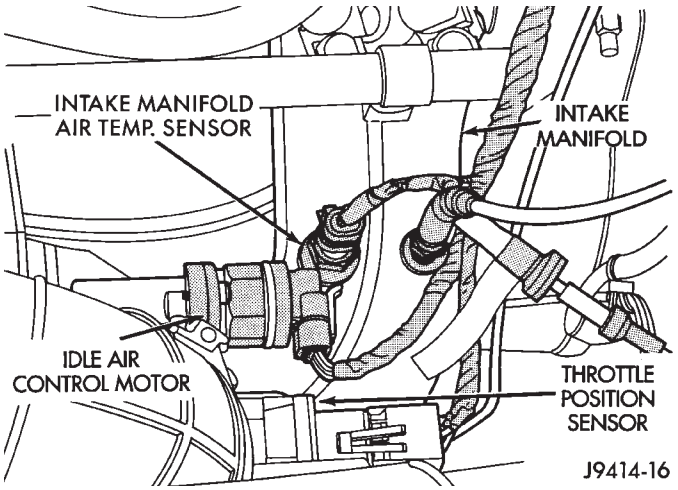

Fig. 19 Sensor Location—2.5L Engine

(18) Inspect engine ground strap connections at dash panel and rear cylinder head bolt (Fig. 20). For ground locations, refer to Group 8, Wiring.

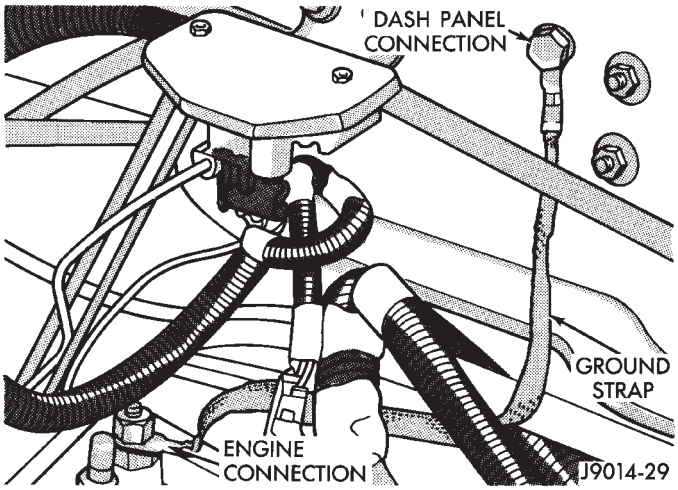

Fig. 20 Engine Ground Strap Connections—Typical

(19) Verify that MAP sensor electrical connector is firmly connected to MAP sensor (Fig. 21). Verify that vacuum hose is firmly connected to MAP sensor and to the intake manifold.

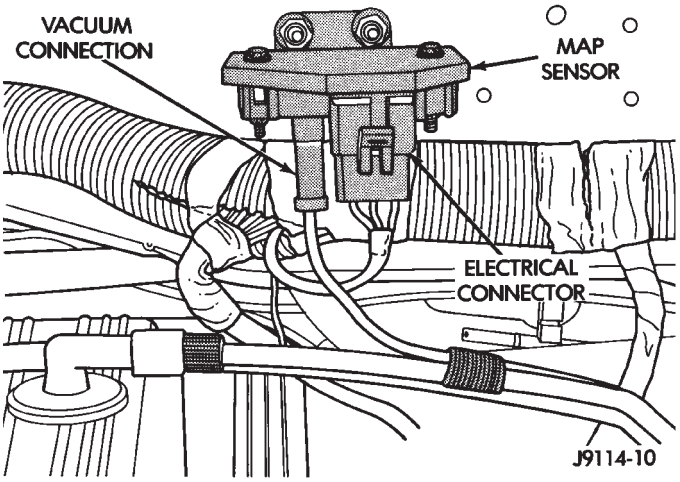

Fig. 21 MAP Sensor—Typical

(20) Verify that fuel injector wire harness connectors are firmly connected to the fuel injectors in the correct order. Each harness connector is tagged with the number of its corresponding fuel injector (Fig. 22).

(21) Verify that harness connectors are firmly connected to idle air control (IAC) motor and throttle position sensor (TPS) (Figs. 18, 19 or 23).

(22) Verify that wire harness connector is firmly connected to the engine coolant temperature sensor (Fig. 24).

(23) Verify that oxygen sensor wire connector is firmly connected to the sensor. Inspect sensor and connector for damage (Fig. 25).

(24) Raise and support the vehicle.

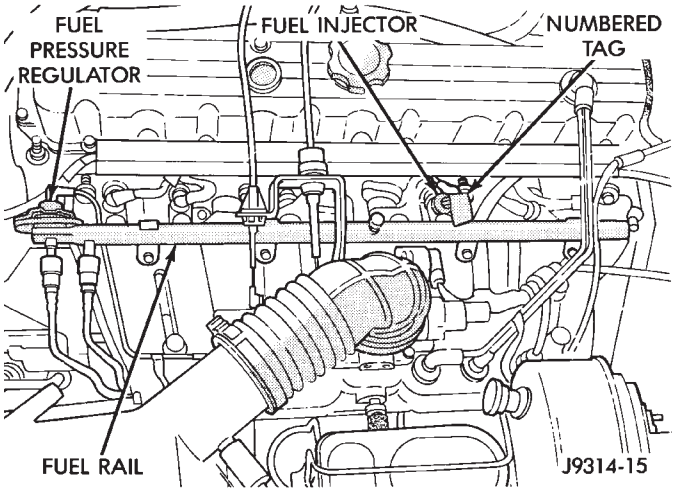

Fig. 22 Fuel Injector Wire Harness—Typical

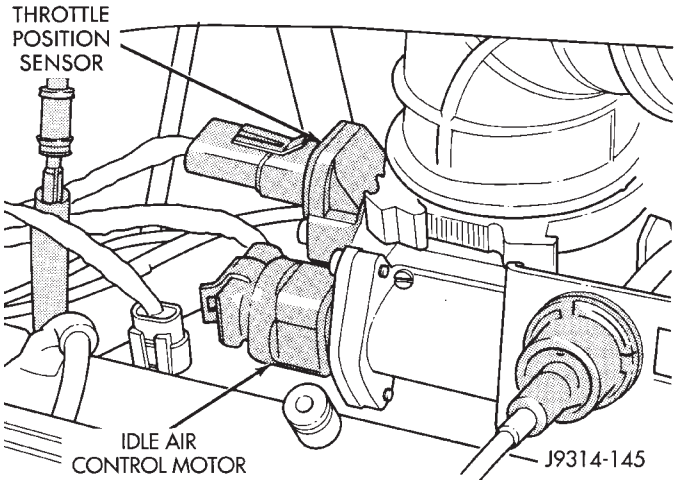

Fig. 23 IAC Motor and TPS—2.5L Engine

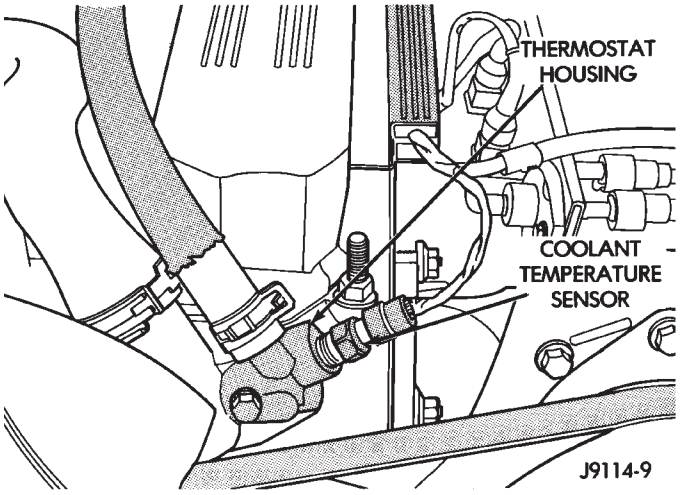

Fig. 24 Engine Coolant Temperature Sensor—Typical

(25) Inspect for pinched or leaking fuel tubes. Inspect for pinched cracked or leaking fuel hoses.

(26) Inspect for exhaust system restrictions such as pinched exhaust pipes, collapsed muffler or

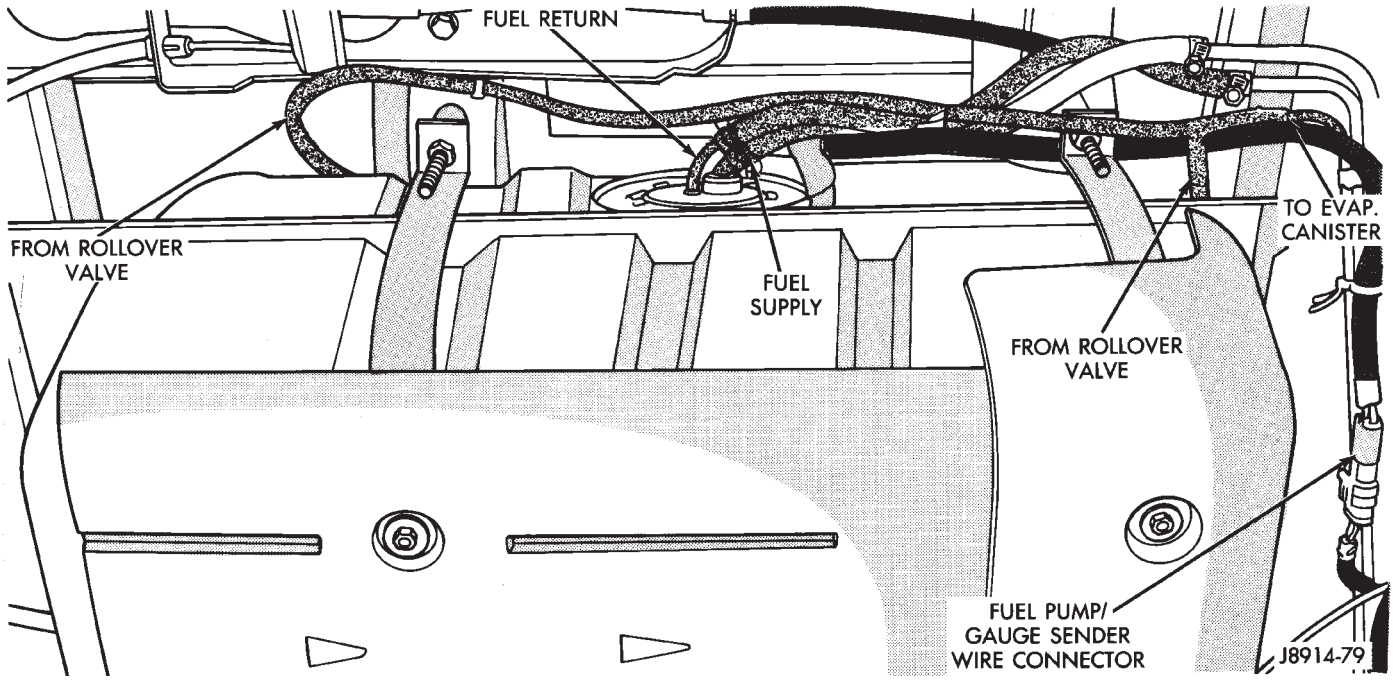

Fig. 27 Fuel Pump Module Connector and Fuel Hoses—Typical

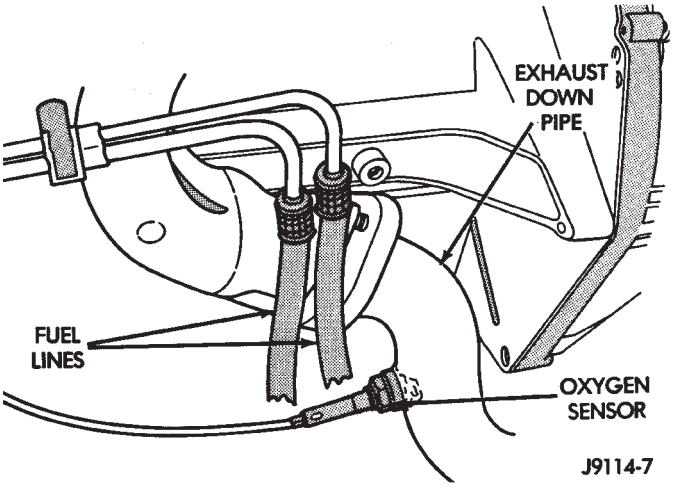

Fig. 25 Oxygen Sensor Location—Typical

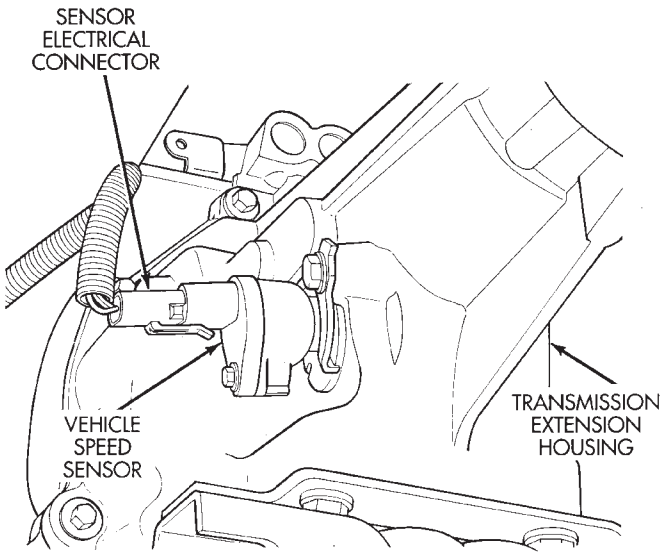

Fig. 26 Vehicle Speed Sensor—Typical

plugged catalytic convertor.

(27) If equipped with automatic transmission, verify that electrical harness is firmly connected to park/neutral safety switch. Refer to Automatic Transmission section of Group 21.

(28) Verify that the harness connector is firmly connected to the vehicle speed sensor (Fig. 26).

(29) Verify that fuel pump module wire connector is firmly connected to harness connector.

(30) Inspect fuel hoses at fuel pump module for cracks or leaks (Fig. 27).

(31) Inspect transmission torque convertor housing (automatic transmission) or clutch housing (manual transmission) for damage to timing ring on drive plate/flywheel.

(32) Verify that battery cable and solenoid feed wire connections to the starter solenoid are tight and clean. Inspect for chaffed wires or wires rubbing up against other components (Fig. 28).

POWERTRAIN CONTROL MODULE (PCM) 60-WAY CONNECTOR

For PCM 60-way connector wiring schematics, refer to Group 8W, Wiring Diagrams.

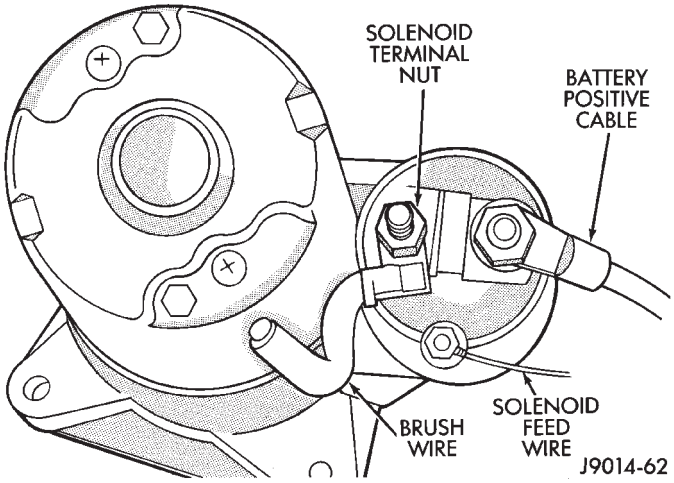

Fig. 28 Starter Solenoid Connections—Typical

PCM SYSTEM SCHEMATICS

Powertrain control system schematics for the 2.5L 4-cylinder and 4.0L 6-cylinder engines are shown in figures 29, 30, 31 and 32.

These schematics are displayed as a quick reference only. They are not intended to be all-inclusive. Refer to the Wiring Diagrams section for detailed information.

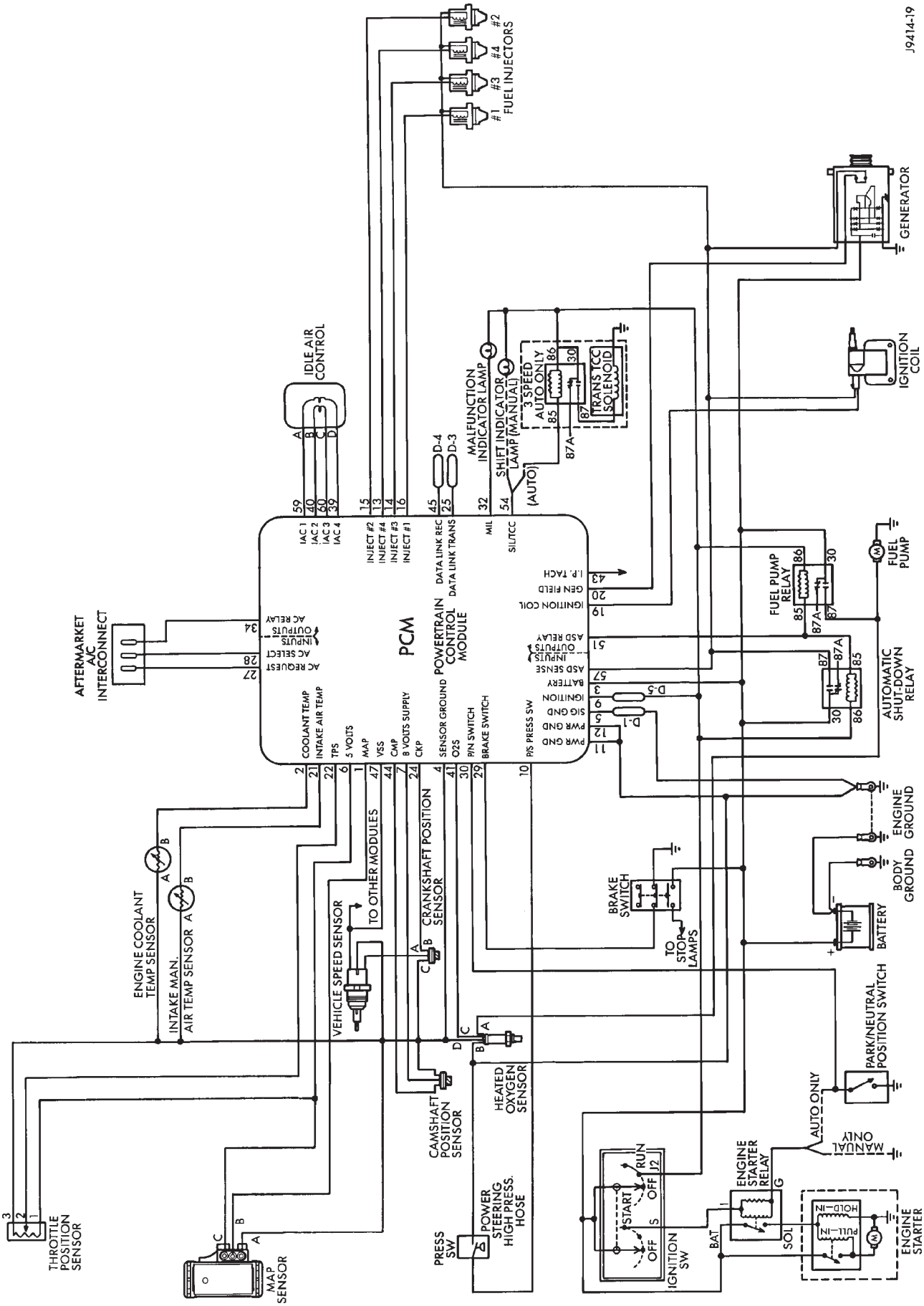

Fig. 29 System Schematic—YJ Models with 2.5L Engine

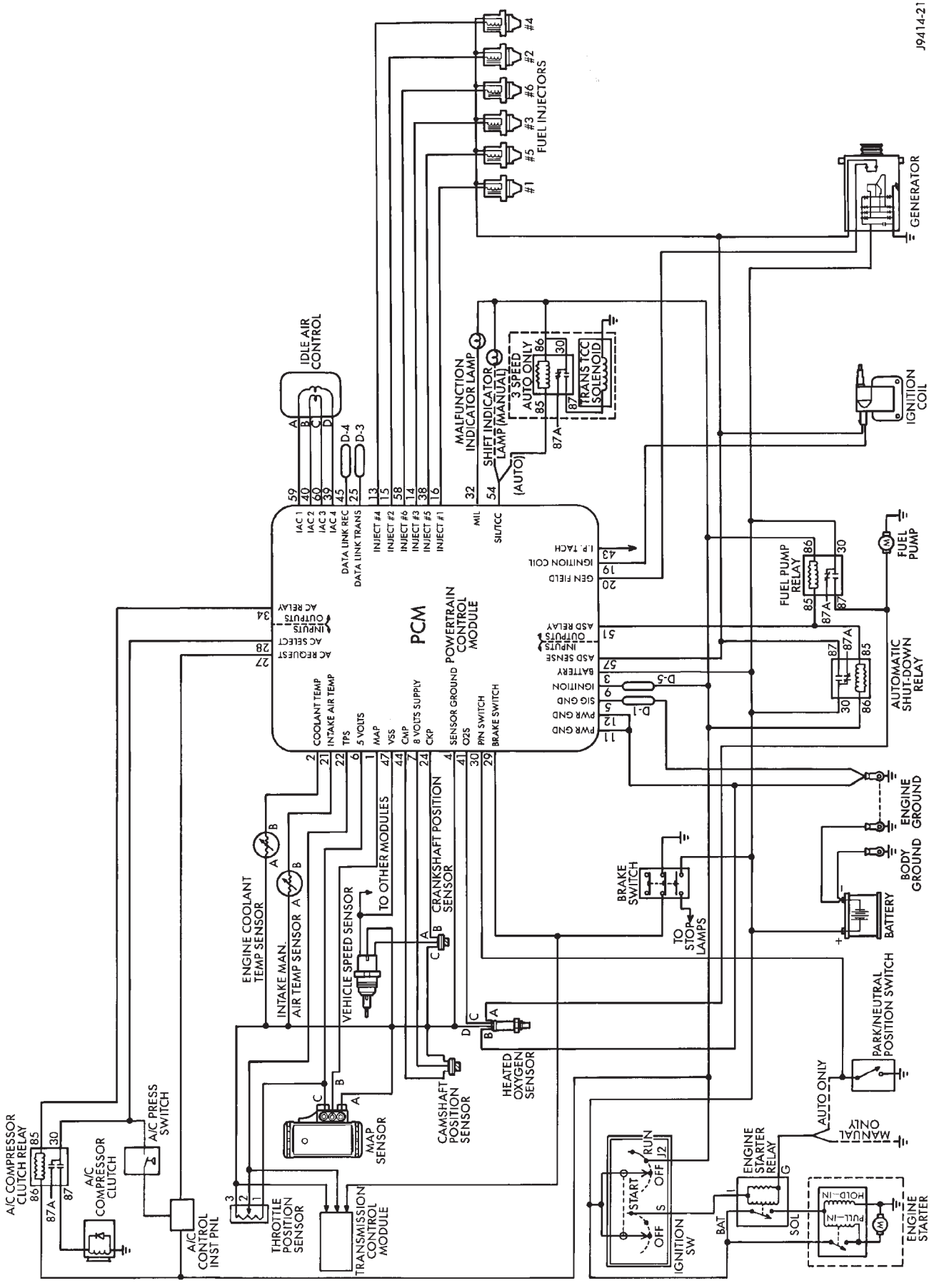

Fig. 30 System Schematic—YJ Models with 4.0L Engine

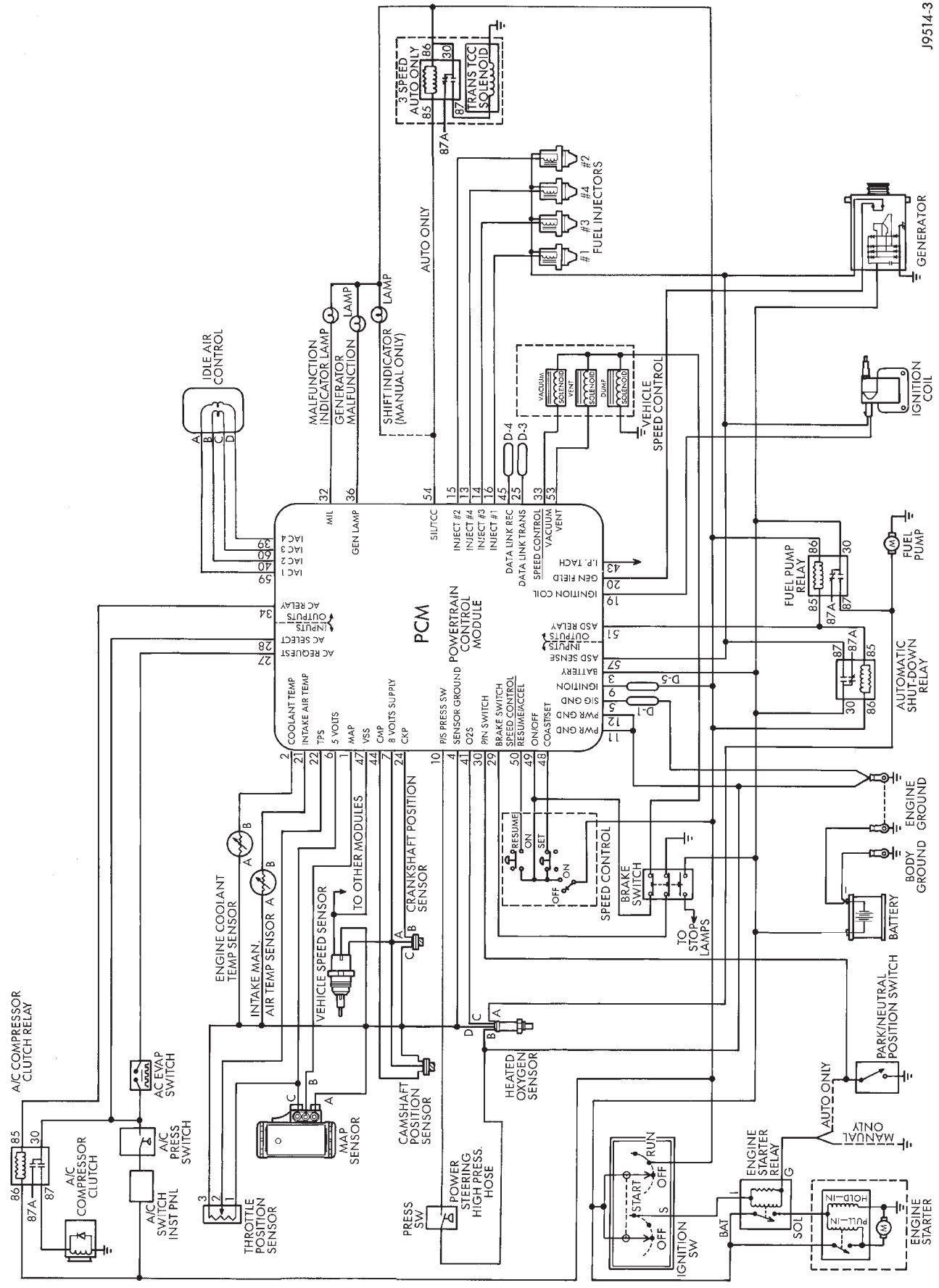

Fig. 31 System Schematic—XJ Models with 2.5L Engine

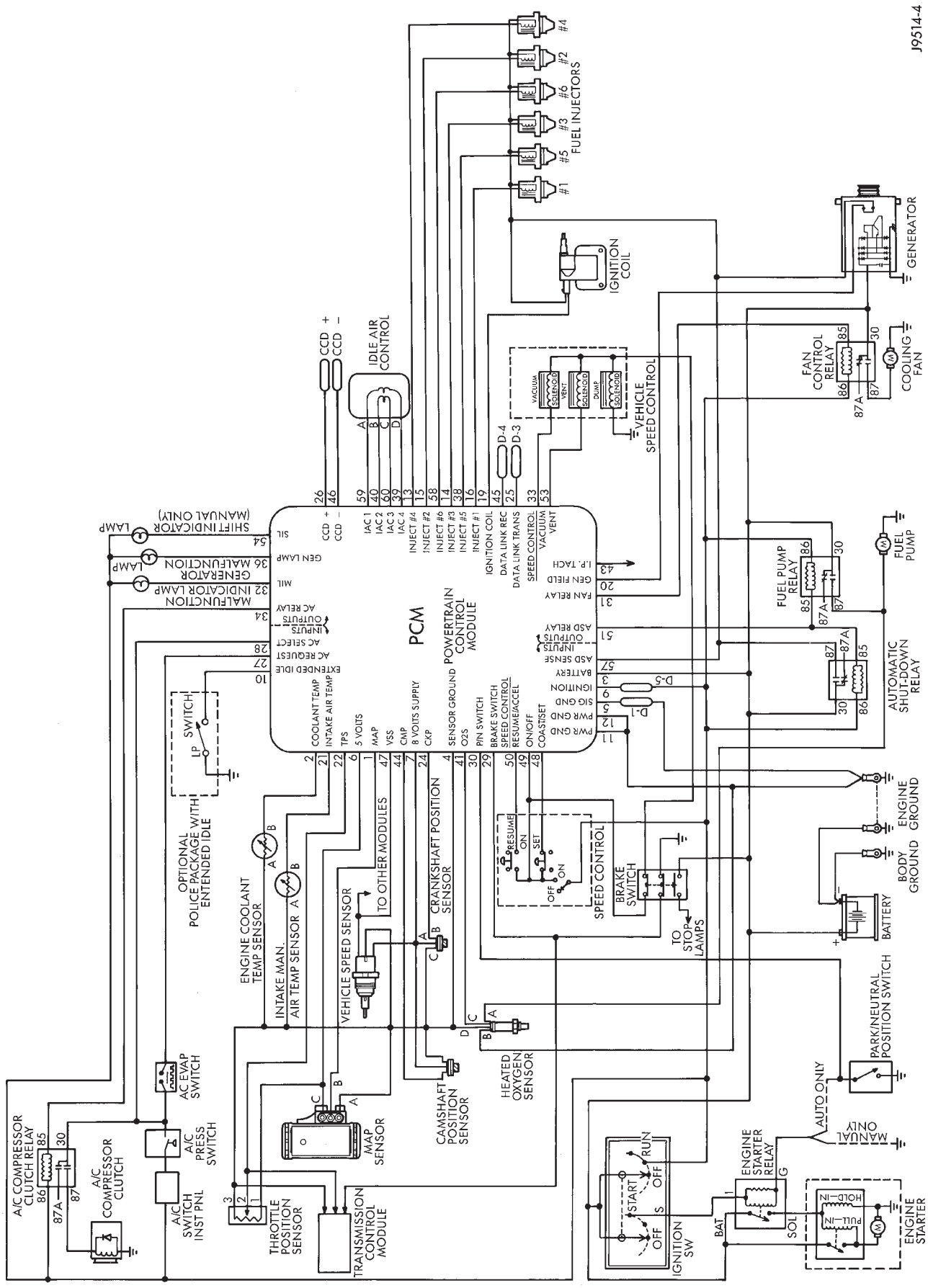

Fig. 32 System Schematic—XJ Models with 4.0L Engine

AUTOMATIC SHUTDOWN (ASD) RELAY TESTING

To perform a complete test of the ASD relay and its circuitry, refer to the DRB scan tool and appropriate Powertrain Diagnostics Procedures manual. To test the relay only, refer to Relays—Operation/Testing in this section of the group.

CAMSHAFT POSITION SENSOR TEST

Refer to Group 8D, Ignition Systems, for Camshaft Position Sensor testing.

ENGINE COOLANT TEMPERATURE SENSOR TEST

To perform a complete test of the engine coolant temperature sensor and its circuitry, refer to DRB scan tool and appropriate Powertrain Diagnostics Procedures manual. To test the sensor only, refer to the following:

Disconnect wire harness connector from engine coolant temperature sensor (Fig. 33).

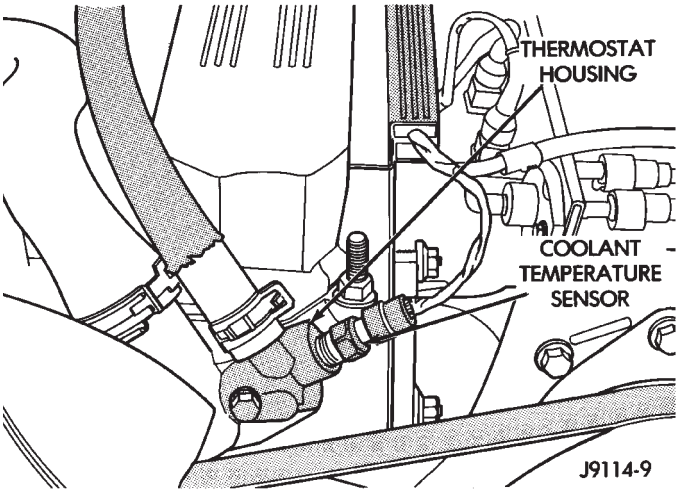

Fig. 33 Engine Coolant Temperature Sensor—Typical

Test the resistance of the sensor with a high input impedance (digital) volt-ohmmeter. The resistance should be less than 1000 ohms with the engine at its correct operating temperature. Refer to the Coolant Temperature Sensor/Manifold Air Temperature Sensor resistance chart. Replace the sensor if it is not within the range of resistance specified in the chart.

Test continuity of the wire harness. Do this between the Powertrain Control Module (PCM) wire harness connector terminal-2 and the sensor connector terminal. Also test continuity of wire harness terminal-4 to the sensor connector terminal. Repair the wire harness if an open circuit is indicated.

INTAKE MANIFOLD AIR TEMPERATURE SENSOR TEST

To perform a complete test of the sensor and its circuitry, refer to DRB scan tool and appropriate Powertrain Diagnostics Procedures manual. To test the sensor only, refer to the following:

SENSOR RESISTANCE (OHMS)—COOLANT TEMPERATURE SENSOR/MANIFOLD AIR TEMPERATURE

TEMPERATURE		RESISTANCE (OHMS)	
C	F	MIN	MAX
−40	−40	291,490	381,710
−20	−4	85,850	108,390
−10	14	49,250	61,430
0	32	29,330	35,990
10	50	17,990	21,810
20	68	11,370	13,610
25	77	9,120	10,880
30	86	7,370	8,750
40	104	4,900	5,750
50	122	3,330	3,880
60	140	2,310	2,670
70	158	1,630	1,870
80	176	1,170	1,340
90	194	860	970
100	212	640	720
110	230	480	540
120	248	370	410

J928D-4

Disconnect the wire harness connector from the intake manifold air temperature sensor (Figs. 34 or 35).

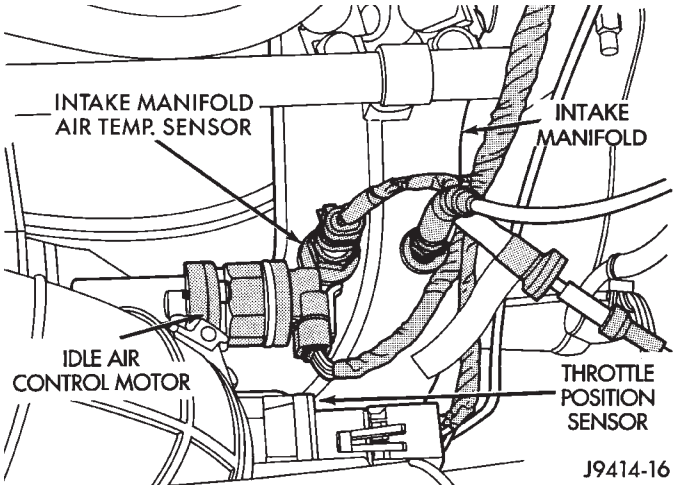

Fig. 34 Air Temperature Sensor—2.5L Engine

Test the resistance of the sensor with an input impedance (digital) volt-ohmmeter. The resistance should be less than 4000 ohms with the engine at operating temperature. The longer the engine idles, the warmer the intake manifold temperature will become. Refer to the Coolant Temperature Sensor/Manifold Air Temperature Sensor resistance chart. Replace the sensor if it is not within the range of resistance specified in the chart.

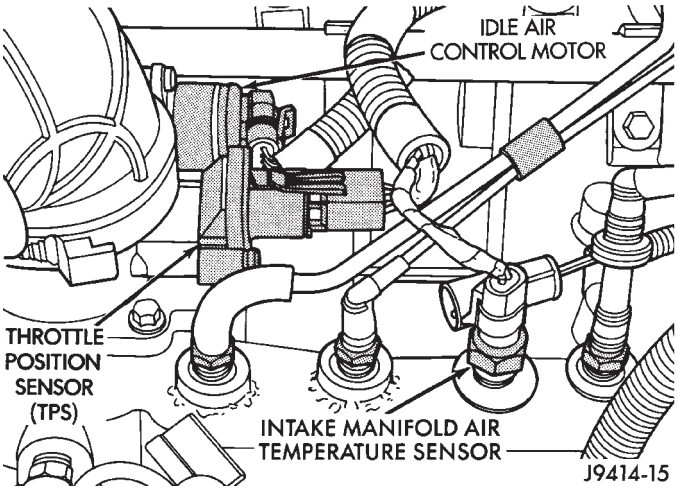

Fig. 35 Air Temperature Sensor—4.0L Engine

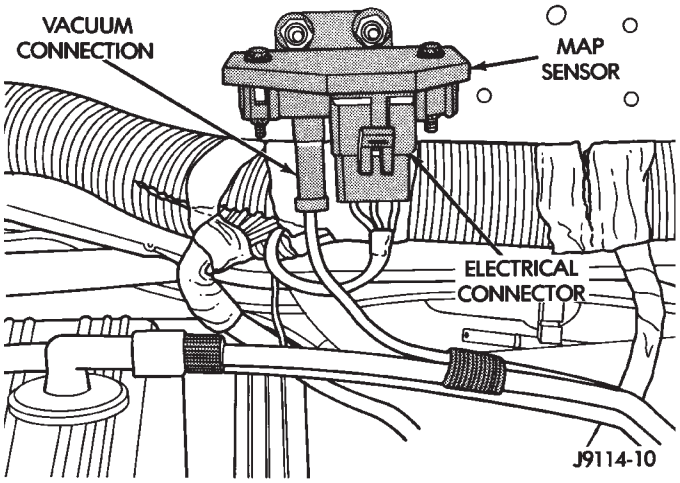

Fig. 36 MAP Sensor—Typical

Test the resistance of the wire harness. Do this between the powertrain control module (PCM) wire harness connector terminal-2 and the sensor connector terminal. Also test terminal-4 to the sensor connector terminal. Repair the wire harness as necessary if the resistance is greater than 1 ohm.

FUEL PUMP RELAY TESTING

For testing this relay, refer to Relays—Operation/ Testing in this section of the group.

MANIFOLD ABSOLUTE PRESSURE (MAP) SENSOR TEST

To perform a complete test of the MAP sensor and its circuitry, refer to DRB scan tool and appropriate Powertrain Diagnostics Procedures manual. To test the sensor only, refer to the following:

Inspect the MAP sensor vacuum hose connections at the throttle body and sensor. Repair as necessary.

CAUTION: When testing, do not remove the electrical connector from MAP sensor (Fig. 36). Be sure that the MAP sensor harness wires are not damaged by the test meter probes.

Test the MAP sensor output voltage at the MAP sensor connector between terminals A and B (as marked on the sensor body) (Fig. 37). With the ignition switch ON and the engine OFF, output voltage should be 4-to-5 volts. The voltage should drop to 1.5-to-2.1 volts with a neutral-hot idle speed condition.

Test the powertrain control module (PCM) (terminal-5) for the same voltage described above to verify the wire harness condition. Repair as necessary.

Test MAP sensor supply voltage at sensor connector between terminals A and C (Fig. 37) with the ignition ON and engine OFF. The voltage should be approximately 5 volts (±0.5V). Five volts (±0.5V)

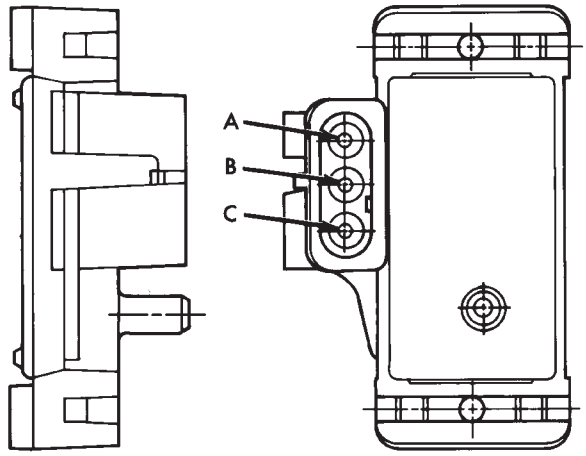

Fig. 37 MAP Sensor Connector Terminals—Typical

should also be at terminal-6 of the PCM wire harness connector. Repair or replace the wire harness as necessary.

Test the MAP sensor ground circuit at sensor connector terminal-A (Fig. 37) and PCM connector terminal-4. Repair the wire harness if necessary.

Test the MAP sensor ground circuit at the PCM connector between terminal-4 and terminal-11 with an ohmmeter. If the ohmmeter indicates an open circuit, inspect for a defective sensor ground connection. Refer to Group 8W, Wiring for location of engine grounds. If the ground connection is good, replace the PCM. If terminal-4 has a short circuit to 12 volts, correct this condition before replacing the PCM.

CRANKSHAFT POSITION SENSOR TEST

Refer to Group 8D, Ignition Systems for test procedures.

EXTENDED IDLE SWITCH TEST

OPTIONAL POLICE PACKAGE ONLY

OPERATION

The extended idle switch is used to raise the engine idle speed to approximately 1000 rpm when the shifter is in either the Park or Neutral position. A rocker-type 2-wire switch (extended idle switch) is mounted to the instrument panel. **This switch is available only with 4.0L engine when supplied with the optional police package.**

TESTING

The extended idle switch will control a ground circuit going to the powertrain control module (PCM). When a ground signal (through this switch) has been received at pin number 10 in the PCM, engine idle speed will increase.

Bring the engine to normal operating temperature and turn the extended idle switch to the ON position. Engine speed should now increase to approximately 1000 rpm when the shifter is in either the Park or Neutral position. If engine speed does not increase, apply a good ground to pin number 10 at the PCM using a small paper clip. Be careful not to damage the wiring with the paper clip. If the engine speed now increases, it can be assumed that the PCM is functioning correctly. Check the instrument panel mounted switch for a closed ground circuit when in the ON position. If the engine speed will not increase after applying a ground to pin number 10, replace the PCM. Refer to Group 8W, Wiring Diagrams for circuit and wiring information.

THROTTLE POSITION SENSOR (TPS) TEST

To perform a complete test of the sensor and its circuitry, refer to DRB scan tool and appropriate Powertrain Diagnostics Procedures manual. To test the sensor only, refer to the following:

The throttle position sensor (TPS) can be tested with a digital voltmeter. The center terminal of the TPS is the output terminal (Figs. 38 or 39).

With the ignition key in the ON position, backprobe the TPS connector. Check the TPS output voltage at the center terminal wire of the connector. Check this at idle (throttle plate closed) and at wide open throttle (WOT). At idle, TPS output voltage should must be greater than 200 millivolts. At wide open throttle, TPS output voltage must be less than 4.8 volts. The output voltage should increase gradually as the throttle plate is slowly opened from idle to WOT.

TORQUE CONVERTER CLUTCH RELAY TEST

To test the relay only, refer to Relays—Operation/Testing in this section of the group. To test the torque converter clutch circuit and related components, refer to the appropriate Powertrain Diagnostic Procedures manual for operation of the DRB scan tool.

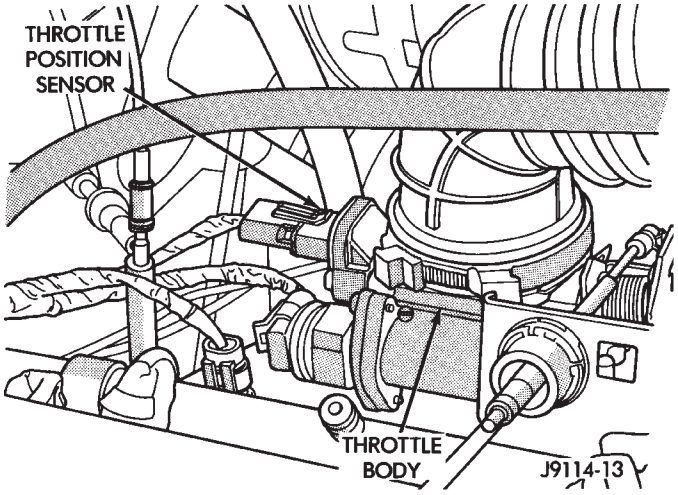

Fig. 38 TPS Testing—2.5L Engine

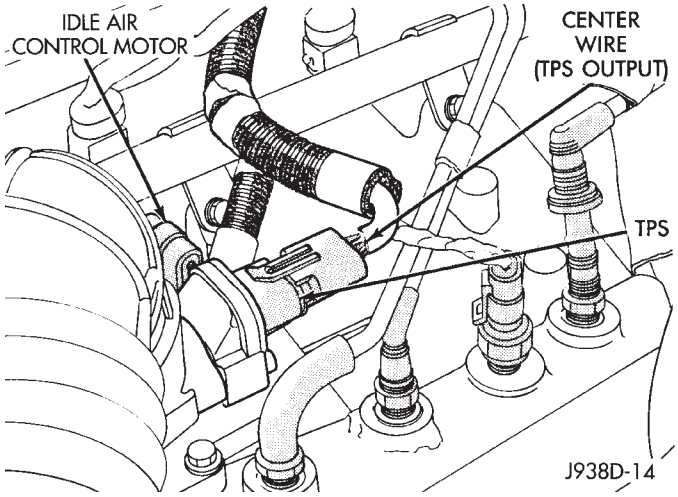

Fig. 39 TPS Testing—4.0L Engine

VEHICLE SPEED SENSOR TEST

To perform a complete test of the sensor and its circuitry, refer to DRB scan tool and appropriate Powertrain Diagnostics Procedures manual.

OXYGEN SENSOR (O2S) HEATING ELEMENT TEST

To perform a complete test of the O2S sensor (Fig. 40) and its circuitry, refer to DRB scan tool and appropriate Powertrain Diagnostics Procedures manual. To test the sensor only, refer to the following:

The oxygen sensor heating element can be tested with an ohmmeter as follows:

With the sensor at room temperature 25 degrees C (77 degrees F), disconnect the O2S sensor connector. Connect the ohmmeter test leads across the white wire terminals of the sensor connector. Resistance should be between 5 and 7 ohms. Replace the sensor if the ohmmeter displays an infinity (open) reading.

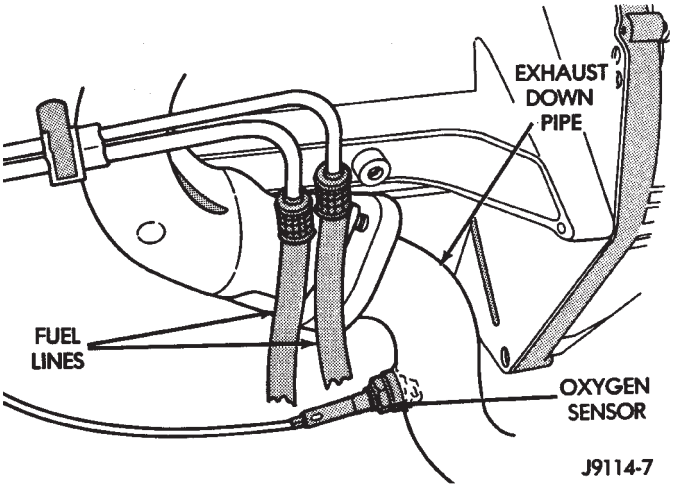

Fig. 40 Oxygen Sensor—Typical

IDLE AIR CONTROL MOTOR TEST

Idle air control (IAC) motor operation can be tested using special exerciser tool number 7558 (Fig. 41).

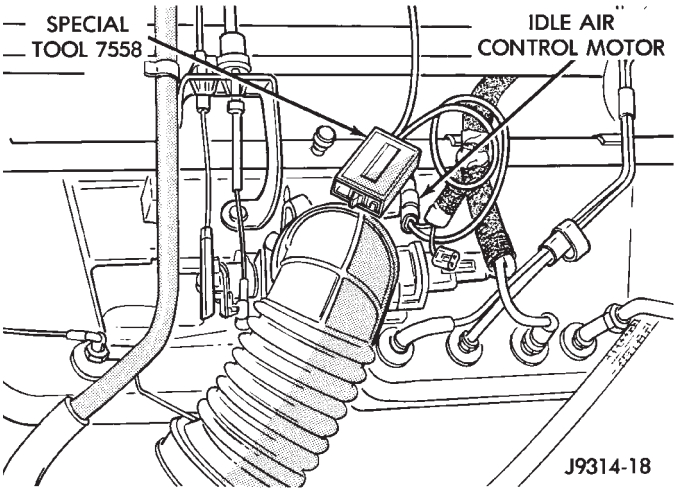

Fig. 41 IAC Motor Testing—Typical

CAUTION: Proper safety precautions must be taken when testing the idle air control motor:

- Set the parking brake and block the drive wheels
- Route all tester cables away from the cooling fans, drive belt, pulleys and exhaust components
- Provide proper ventilation while operating the engine
- Always return the engine idle speed to normal before disconnecting the exerciser tool

(1) With the ignition OFF, disconnect the IAC motor wire connector at throttle body (Fig. 41).

(2) Plug the exerciser tool number 7558 harness connector into the IAC motor.

(3) Connect the red clip of exerciser tool 7558 to battery positive terminal. Connect the black clip to negative battery terminal. The red light on the exerciser tool will flash when the tool is properly connected.

(4) Start engine.

When the switch on the tool is in the HIGH or LOW position, the light on the tool will flash. This indicates that voltage pulses are being sent to the IAC stepper motor.

(5) Move the switch to the HIGH position. The engine speed should increase. Move the switch to the LOW position. The engine speed should decrease.

(a) If the engine speed changes while using the exerciser tool, the IAC motor is functioning properly. Disconnect the exerciser tool and connect the IAC motor wire connector to the stepper motor.

(b) If the engine speed does not change, turn the ignition OFF and proceed to step (6). Do not disconnect exerciser tool from the IAC motor.

(6) Remove the IAC motor from the throttle body. Do not remove IAC motor housing from throttle body.

CAUTION: When checking IAC motor operation with the motor removed from the throttle body, do not extend the pintle (Fig. 42) more than 6.35 mm (.250 in). If the pintle is extended more than this amount, it may separate from the IAC motor. The IAC motor must be replaced if the pintle separates from the motor.

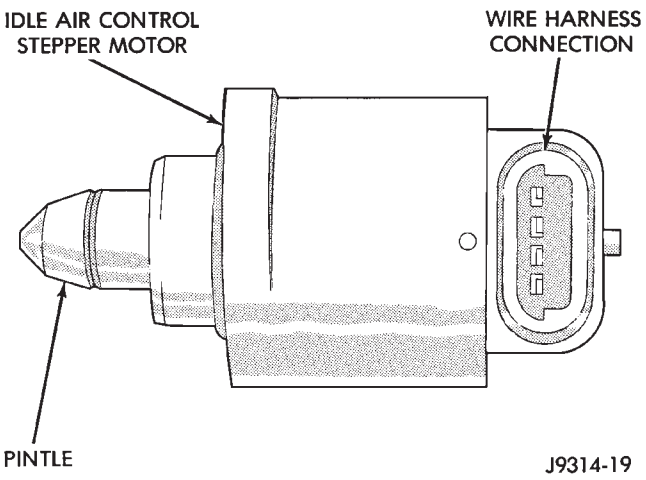

Fig. 42 Idle Air Control (IAC) Motor Pintle

(7) With the ignition OFF, cycle the exerciser tool switch between the HIGH and LOW positions. Observe the pintle. The pintle should move in-and-out of the motor.

(a) If the pintle does not move, replace the idle air control motor. Start the engine and test the replacement motor operation as described in step (5).

(b) If the pintle operates properly, check the idle air control motor bore in the throttle body bore for blockage and clean as necessary. Reinstall the idle air control motor and retest. If blockage is not found, refer to the DRB scan tool and the appropriate Powertrain Diagnostics Procedures service manual.

RELAYS—OPERATION/TESTING

OPERATION

The following operations/tests apply to these relays only: automatic shutdown (ASD), fuel pump and torque converter clutch. For operations/tests on all other relays, refer to the appropriate section of this service manual.

The relay terminal numbers from (Fig. 43) can be found on the bottom of the relay:

- Terminal number 30 is connected to battery voltage and can be switched or B+ (hot) at all times.
- Terminal number 87A is connected (a circuit is formed) to terminal 30 in the de-energized (normally OFF) position.
- Terminal number 87 is connected (a circuit is formed) to terminal 30 in the energized (ON) position. Terminal number 87 then supplies battery voltage to the component being operated.
- Terminal number 86 is connected to a switched (+) power source.
- Terminal number 85 is grounded by the powertrain control module (PCM).

TESTING

(1) Remove relay before testing.

(2) Using an ohmmeter, perform a resistance test between terminals 85 and 86. Resistance value (ohms) should be 75 ±5 ohms for resistor equipped relays.

(3) Connect the ohmmeter between terminals number 87A and 30. Continuity should be present at this time.

(4) Connect the ohmmeter between terminals number 87 and 30. Continuity should not be present at this time.

(5) Use a set of jumper wires (16 gauge or smaller). Connect one jumper wire between terminal number 85 (on the relay) to the ground side (-) of a 12 Volt power source.

(6) Attach the other jumper wire to the positive side (+) of a 12V power source. Do not connect the jumper wire to relay at this time.

CAUTION: DO NOT ALLOW THE OHMMETER TO CONTACT TERMINALS 85 OR 86 DURING THESE TESTS. DAMAGE TO OHMMETER MAY RESULT.

(7) Attach the other jumper wire (12V +) to terminal number 86. This will activate the relay. Continuity should now be present between terminals number 87 and 30. Continuity should not be present between terminals number 87A and 30.

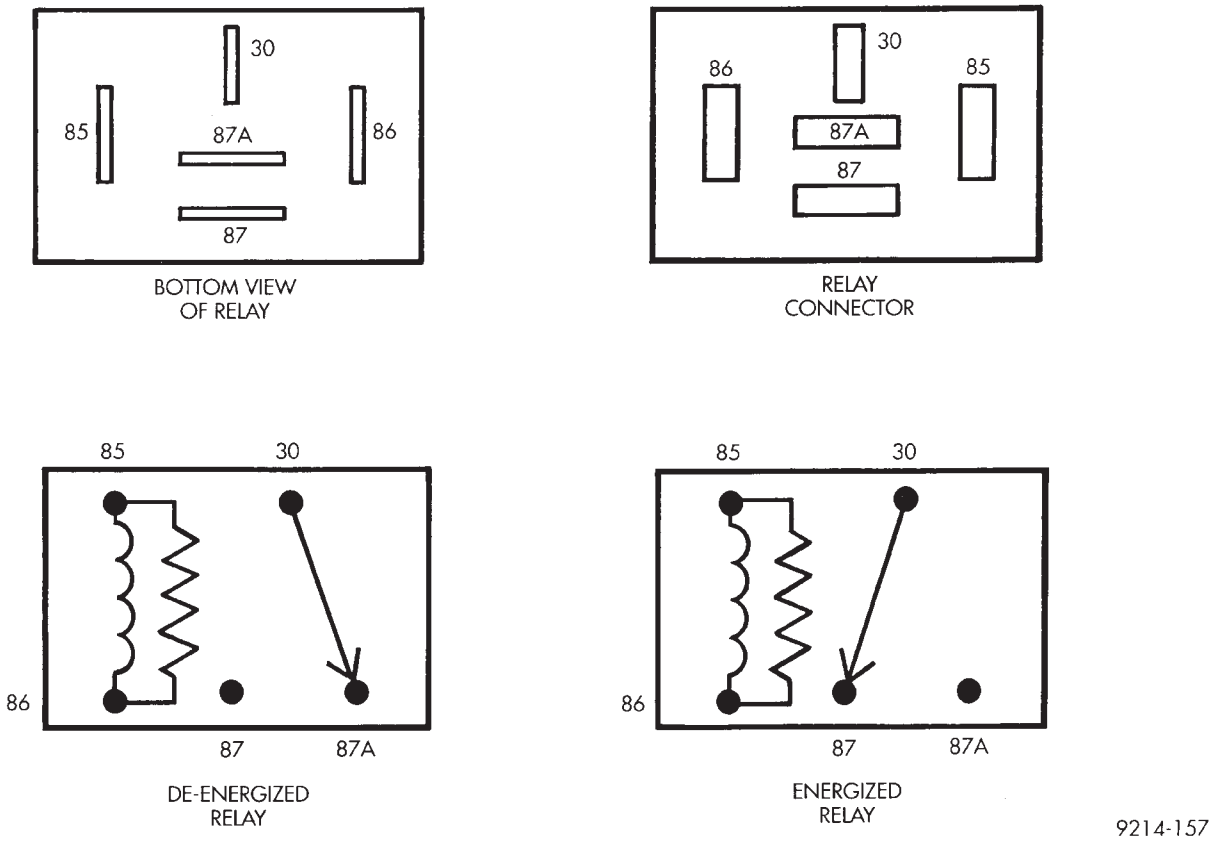

Fig. 43 Relay Terminals

(8) Disconnect jumper wires from relay and 12 Volt power source.

If continuity or resistance tests did not pass, replace relay. If tests passed, refer to Group 8W, Wiring Diagrams for additional circuit information. Also refer to the appropriate Powertrain Diagnostic Procedures manual for operation of the DRB scan tool.

STARTER MOTOR RELAY TEST

Refer to Group 8A, Battery/Starting/Charging/System Diagnostics, for starter motor relay testing.

FUEL INJECTOR TEST

To perform a complete test of the fuel injectors and their circuitry, refer to DRB scan tool and appropriate Powertrain Diagnostics Procedures manual. To test the injector only, refer to the following:

Disconnect the injector wire connector from the injector. Place an ohmmeter on the injector terminals. Resistance reading should be approximately 14.5 ohms ±1.2 ohms at 20°C (68°F). Proceed to the following Injector Diagnosis chart. **When performing the following tests from the chart, do not leave electrical current applied to the injector for longer than five seconds. Damage to injector coil or internal injector seals could result.**

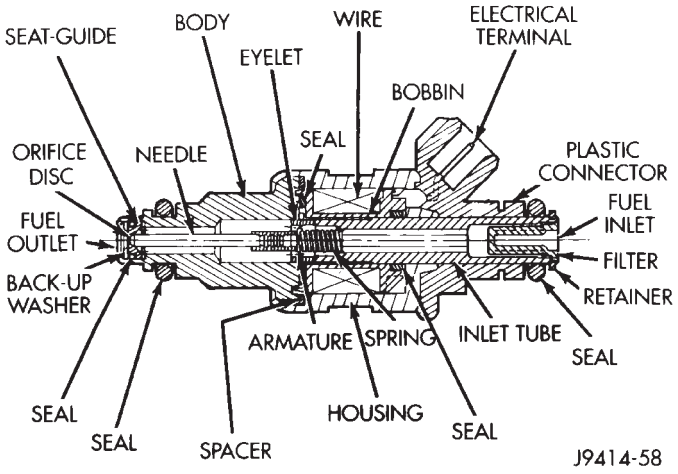

Fig. 44 Fuel Injector Internal Components—Typical

FUEL SYSTEM PRESSURE TEST

Refer to the Fuel Delivery System section of this group. See Fuel System Pressure Test.

ON-BOARD DIAGNOSTICS (OBD)

The powertrain control module (PCM) has been programmed to monitor many different circuits of the fuel injection system. If a problem is sensed in a monitored circuit often enough to indicate an actual problem, a Diagnostic Trouble Code (DTC) is stored. The DTC will be stored in the PCM memory for eventual display to the service technician. If the problem is repaired or ceases to exist, the PCM cancels the DTC after 51 engine starts.

Certain criteria must be met for a diagnostic trouble code (DTC) to be entered into PCM memory. The criteria may be a specific range of engine rpm, engine temperature and/or input voltage to the PCM.

It is possible that a DTC for a monitored circuit may not be entered into memory even though a malfunction has occurred. This may happen because one of the DTC criteria for the circuit has not been met. Example: assume that one of the criteria for the MAP sensor circuit is that the engine must be operating between 750 and 2000 rpm to be monitored for a DTC. If the MAP sensor output circuit shorts to ground when the engine rpm is above 2400 rpm, a 0 volt input will be seen by the PCM. A DTC will not be entered into memory because the condition does not occur within the specified rpm range.

A DTC indicates that the powertrain control module (PCM) has recognized an abnormal signal in a circuit or the system. A DTC may indicate the result of a failure, but never identify the failed component directly.

There are several operating conditions that the PCM does not monitor and set a DTC for. Refer to the following Monitored Circuits and Non-Monitored Circuits in this section.

MONITORED CIRCUITS

The powertrain control module (PCM) can detect certain problems in the fuel injection system.

Open or Shorted Circuit - The PCM can determine if sensor output (which is the input to PCM) is within proper range. It also determines if the circuit is open or shorted.

Output Device Current Flow - The PCM senses whether the output devices are hooked up.

If there is a problem with the circuit, the PCM senses whether the circuit is open, shorted to ground (-), or shorted to (+) voltage.

Oxygen Sensor - The PCM can determine if the oxygen sensor is switching between rich and lean. This is, once the system has entered Closed Loop. Refer to Open Loop/Closed Loop Modes Of Operation in the Component Description/System Operation section for an explanation of Closed (or Open) Loop operation.

NON-MONITORED CIRCUITS

The PCM does not monitor the following circuits, systems or conditions that could have malfunctions that result in driveability problems. A Diagnostic Trouble Code (DTC) may not be displayed for these conditions.

Fuel Pressure: Fuel pressure is controlled by the vacuum assisted fuel pressure regulator. The PCM cannot detect a clogged fuel pump inlet filter, clogged in-line fuel filter, or a pinched fuel supply or return

INJECTOR DIAGNOSIS—VEHICLE RUNS ROUGH AND/OR HAS A MISS

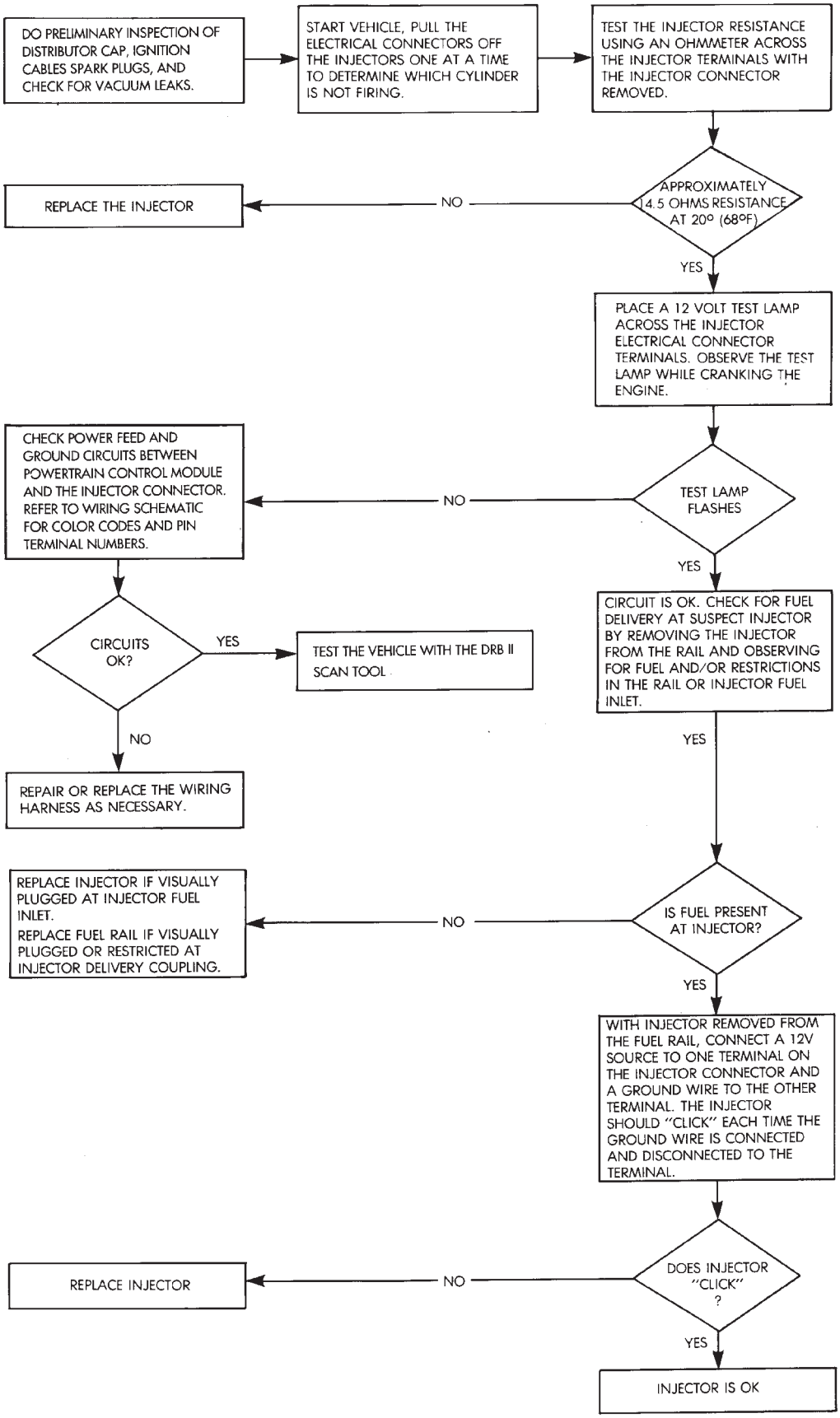

line. However, these could result in a rich or lean condition causing an oxygen sensor DTC to be stored in the PCM.

Secondary Ignition Circuit: The PCM cannot detect an inoperative ignition coil, fouled or worn spark plugs, ignition cross firing, or open circuited spark plug cables.

Engine Timing: The PCM cannot detect an incorrectly indexed timing chain, camshaft sprocket or crankshaft sprocket. The PCM also cannot detect an incorrectly indexed distributor. However, these could result in a rich or lean condition causing an oxygen sensor DTC to be stored in the PCM.

Cylinder Compression: The PCM cannot detect uneven, low, or high engine cylinder compression.

Exhaust System: The PCM cannot detect a plugged, restricted or leaking exhaust system.

Fuel Injector Malfunctions: The PCM cannot determine if the fuel injector is clogged, or the wrong injector is installed. However, these could result in a rich or lean condition causing an oxygen sensor DTC to be stored in the PCM.

Excessive Oil Consumption: Although the PCM monitors exhaust stream oxygen content through oxygen sensor (closed loop), it cannot determine excessive oil consumption.

Throttle Body Air Flow: The PCM cannot detect a clogged or restricted air cleaner inlet or air cleaner element.

Evaporative System: The PCM will not detect a restricted, plugged or loaded EVAP canister.

Vacuum Assist: Leaks or restrictions in the vacuum circuits of vacuum assisted engine control system devices are not monitored by the PCM. However, a vacuum leak at the MAP sensor will be monitored and a diagnostic trouble code (DTC) will be generated by the PCM.

Powertrain Control Module (PCM) System Ground: The PCM cannot determine a poor system ground. However, a DTC may be generated as a result of this condition.

Powertrain Control Module (PCM) Connector Engagement: The PCM cannot determine spread or damaged connector pins. However, a DTC may be generated as a result of this condition.

HIGH AND LOW LIMITS

The powertrain control module (PCM) compares input signal voltages from each input device. It will establish high and low limits that are programmed into it for that device. If the input voltage is not within specifications and other Diagnostic Trouble Code (DTC) criteria are met, a DTC will be stored in memory. Other DTC criteria might include engine rpm limits or input voltages from other sensors or switches. The other inputs might have to be sensed by the PCM when it senses a high or low input voltage from the control system device in question.

ACCESSING DIAGNOSTIC TROUBLE CODES

A stored diagnostic trouble code (DTC) can be displayed by cycling the ignition key On-Off-On-Off-On within three seconds and observing the malfunction indicator lamp. This lamp is displayed on the instrument panel as the CHECK ENGINE lamp (Figs. 45 or 46).

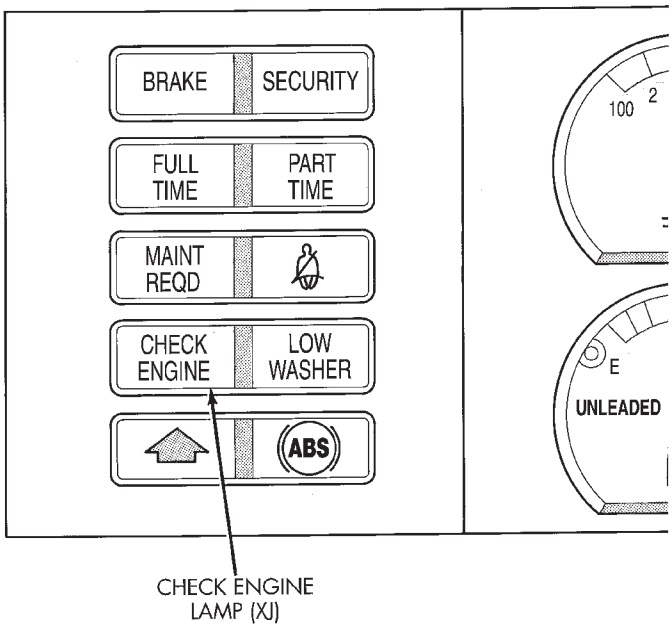

Fig. 45 Check Engine Lamp—XJ Models—Typical

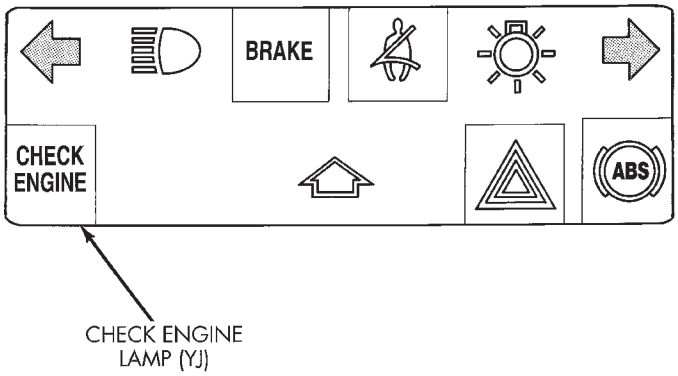

Fig. 46 Check Engine Lamp—YJ Models—Typical

They can also be displayed through the use of the Diagnostic Readout Box (DRB) scan tool. The DRB scan tool connects to the data link connector in the engine compartment (Figs. 47 or 48). For operation of the DRB, refer to the appropriate Powertrain Diagnostic Procedures service manual.

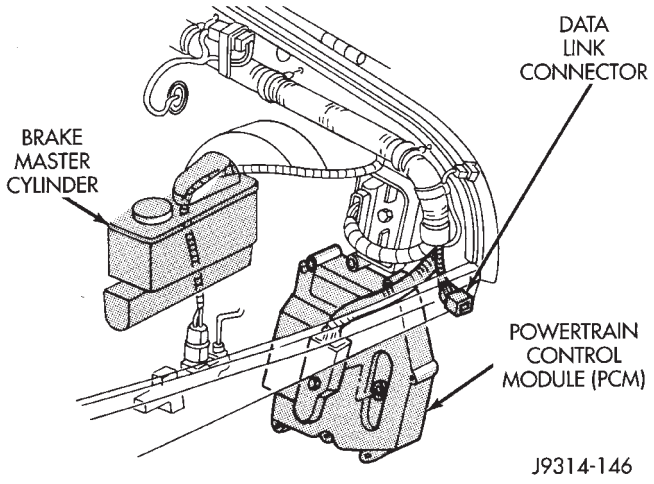

Fig. 47 Data Link Connector—YJ Models—Typical

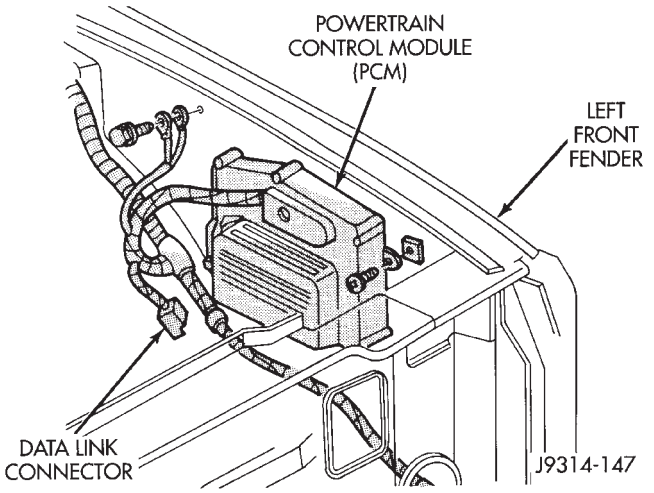

Fig. 48 Data Link Connector—XJ Models—Typical

EXAMPLES:

• If the lamp (Figs. 45 or 46) flashes 1 time, pauses and flashes 2 more times, a flashing Diagnostic Trouble Code (DTC) number 12 is indicated. If this code is observed, it is indicating that the battery has been disconnected within the last 50 key-on cycles. It could also indicate that battery voltage has been disconnected to the PCM. In either case, other DTC's may have been erased.

• If the lamp flashes 4 times, pauses and flashes 1 more time, a flashing Diagnostic Trouble Code (DTC) number 41 is indicated.

• If the lamp flashes 4 times, pauses and flashes 6 more times, a flashing Diagnostic Trouble Code (DTC) number 46 is indicated.

After any stored DTC information has been observed, the display will end with a flashing DTC number 55. This will indicate the end of all stored information.

Refer to the Diagnostic Trouble Code (DTC) charts for DTC identification.

If the problem is repaired or ceases to exist, the Powertrain Control Module (PCM) cancels the DTC after 51 engine starts.

Diagnostic Trouble Codes indicate the results of a failure, but never identify the failed component directly.

The circuits of the data link connector are shown in (Fig. 49).

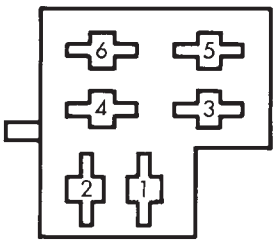

D-1	GROUND
D-2	N/C
D-3	SCI TRANS
D-4	SCI RECEIVE
D-5	IGNITION
D-6	NOT USED

Fig. 49 Data Link Connector Schematic

ERASING TROUBLE CODES

After the problem has been repaired, use the DRB scan tool to erase a Diagnostic Trouble Code (DTC). Refer to the appropriate Powertrain Diagnostic Procedures service manual for operation of the DRB scan tool.

DRB SCAN TOOL

For operation of the DRB scan tool, refer to the appropriate Powertrain Diagnostic Procedures service manual.

DIAGNOSTIC TROUBLE CODE (DTC)

On the following pages, a list of diagnostic trouble codes is provided for the 2.5L 4-cylinder and 4.0L 6-cylinder engines. A DTC indicates that the powertrain control module (PCM) has recognized an abnormal signal in a circuit or the system. A DTC may indicate the result of a failure, but never identify the failed component directly.

DIAGNOSTIC TROUBLE CODE DESCRIPTIONS

Diagnostic Trouble Code	DRB Scan Tool	Description of Diagnostic Trouble Code
11*	No Crank Reference Signal at PCM	No crank reference signal detected during engine cranking.
12*	Battery Disconnect	Direct battery input to PCM was disconnected within the last 50 Key-on cycles.
13**	No Change in MAP From Start to Run	No difference recognized between the engine MAP reading and the barometric (atmospheric) pressure reading at start-up.
14**	MAP Sensor Voltage Too Low	MAP sensor input below minimum acceptable voltage.
	or	
	MAP Sensor Voltage Too High	MAP sensor input above maximum acceptable voltage.
15**	No Vehicle Speed Sensor Signal	No vehicle distance (speed) sensor signal detected during road load conditions.
17*	Engine is Cold Too Long	Engine coolant temperature remains below normal operating temperatures during vehicle travel (thermostat).
21**	O2S Stays at Center	Neither rich or lean condition detected from the oxygen sensor input.
	or	
	O2S Shorted to Voltage	Oxygen sensor input voltage maintained above the normal operating range.
22**	ECT Sensor Voltage Too High	Engine coolant temperature sensor input above maximum acceptable voltage.
	or	
	ECT Sensor Voltage Too Low	Engine coolant temperature sensor input below minimum acceptable voltage.
23**	Intake Air Temp Sensor Voltage Low	Intake manifold air temperature sensor input below the minimum acceptable voltage.
	or	
	Intake Air Temp Sensor Voltage High	Intake manifold air temperature sensor input above the maximum acceptable voltage.
24**	Throttle Position Sensor Voltage High	Throttle position sensor input above the maximum acceptable voltage.
	or	
	Throttle Position Sensor Voltage Low	Throttle position sensor input below the minimum acceptable voltage.

* Check Engine Lamp will not illuminate at all times if this Diagnostic Trouble Code was recorded. Cycle Ignition key as described in manual and observe code flashed by Check Engine lamp.
** Check Engine Lamp will illuminate during engine operation if this Diagnostic Trouble Code was recorded.

DIAGNOSTIC TROUBLE CODE DESCRIPTIONS—CONTINUED

Diagnostic Trouble Code	DRB Scan Tool	Description of Diagnostic Trouble Code
25**	Idle Air Control Motor Circuits	A shorted condition detected in one or more of the idle air control motor circuits.
27*	Injector #1 Control Circuit	Injector #1 output driver does not respond properly to the control signal.
	or	
	Injector #2 Control Circuit	Injector #2 output driver does not respond properly to the control signal.
	or	
	Injector #3 Control Circuit	Injector #3 output driver does not respond properly to the control signal.
	or	
	Injector #4 Control Circuit	Injector #4 output driver does not respond properly to the control signal.
	or	
	Injector #5 Control Circuit	Injector #5 output driver does not respond properly to the control signal.
	or	
	Injector #6 Control Circuit	Injector #6 output driver does not respond properly to the control signal.
33*	A/C Clutch Relay Circuit	An open or shorted condition detected in the A/C clutch relay circuit.
34*	Speed Control Solenoid Circuits	An open or shorted condition detected in the Speed Control vacuum or vent solenoid circuits.
	or	
	Speed Control Switch Always Low	Speed Control switch input below the minimum acceptable voltage.
	or	
	Speed Control Switch Always High	Speed Control switch input above the maximum acceptable voltage.
35* (XJ Only)	Rad Fan Control Relay Circuits	An open or shorted condition detected in the radiator fan relay circuit.
41**	Generator Field Not Switching Properly	An open or shorted condition detected in the generator field control circuit.
42*	Auto Shutdown Relay Control Circuit	An open or shorted condition detected in the auto shutdown relay circuit.

* Check Engine Lamp will not illuminate at all times if this Diagnostic Trouble Code was recorded. Cycle Ignition key as described in manual and observe code flashed by Check Engine lamp.
** Check Engine Lamp will illuminate during engine operation if this Diagnostic Trouble Code was recorded.

DIAGNOSTIC TROUBLE CODE DESCRIPTIONS—CONTINUED

Diagnostic Trouble Code	DRB Scan Tool	Description of Diagnostic Trouble Code
44*	Battery Temp Sensor Volts out of Limit	An open or shorted condition exists in the engine coolant temperature sensor circuit or a problem exists in the PCM's battery temperature voltage circuit.
46**	Charging System Voltage Too High	Battery voltage sense input above target charging voltage during engine operation.
47**	Charging System Voltage Too Low	Battery voltage sense input below target charging during engine operation. Also, no significant change detected in battery voltage during active test of generator output.
51**	O2S Signal Stays Below Center (Lean)	Oxygen sensor signal input indicates lean air/fuel ratio condition during engine operation.
52**	O2S Signal Stays Above Center (Rich)	Oxygen sensor signal input indicates rich air/fuel ratio condition during engine operation.
53*	Internal PCM Failure	PCM Internal fault condition detected.
	or	
	PCM Failure SRI Communications	PCM Internal fault condition detected.
54*	No Cam Sync Signal at PCM	No fuel sync (camshaft signal) detected during engine cranking.
55*	Display not shown on DRB scan tool	Completion of diagnostic trouble code display on the Malfunction Indicator Lamp (Check Engine Lamp).
62*	PCM Failure SRI miles not stored	Unsuccessful attempt to update SRI (service reminder indicator) miles in the PCM EEPROM.
63*	PCM Failure EEPROM Write Denied	Unsuccessful attempt to write to an EEPROM location by the PCM.

* Check Engine Lamp will not illuminate at all times if this Diagnostic Trouble Code was recorded. Cycle Ignition key as described in manual and observe code flashed by Check Engine lamp.

** Check Engine Lamp will illuminate during engine operation if this Diagnostic Trouble Code was recorded.

MULTI-PORT FUEL INJECTION (MFI)—COMPONENT REMOVAL/INSTALLATION

INDEX

	page
Accelerator Pedal and Throttle Cable	58
Air Cleaner Element	59
Air Cleaner Housing	58
Air Conditioning (A/C) Clutch Relay	58
Automatic Shutdown (ASD) Relay	59
Brake Switch	59
Camshaft Position Sensor	60
Crankshaft Position Sensor	60
Engine Coolant Temperature Sensor	60
Fuel Filter	60
Fuel Injector	60
Fuel Pressure Regulator	61
Fuel Pump Module	61
Fuel Pump Relay	61
Fuel Rail Assembly	62
Fuel System Pressure Release Procedure	62
Fuel Tank Pressure Relief/Rollover Valve	62
Fuel Tanks	62
Fuel Tubes/Lines/Hoses and Clamps	62
Idle Air Control (IAC) Motor	62
Ignition Coil	62
Intake Manifold	63
Intake Manifold Air Temperature Sensor	60
Manifold Absolute Pressure (Map) Sensor	63
Oxygen (O2S) Sensor	63
Park Neutral Switch	63
Power Steering Pressure Switch—2.5L Engine Only	63
Powertrain Control Module (PCM)	64
Quick-Connect Fittings	64
Throttle Body	64
Throttle Position Sensor (TPS)	65
Torque Converter Clutch Relay	65
Vehicle Speed Sensor	66

ACCELERATOR PEDAL AND THROTTLE CABLE

Refer to the Accelerator Pedal and Throttle Cable section of this group for removal/installation procedures.

AIR CONDITIONING (A/C) CLUTCH RELAY

The A/C clutch relay is located in the power distribution center (PDC) (Figs. 1 or 2). For location of this relay within the PDC, refer to label on PDC cover.

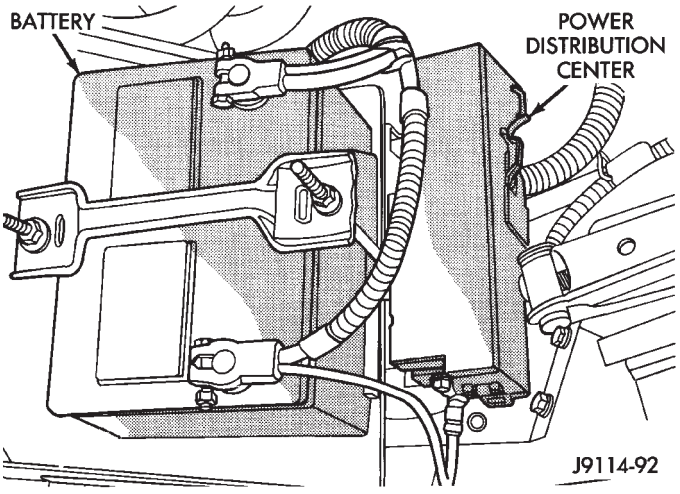

Fig. 1 PDC—YJ Models

AIR CLEANER HOUSING

REMOVAL

(1) Unlock clean air hose clamp (Figs. 3 or 4) at air cleaner cover. To unlock the clamp, attach adjustable pliers to clamp and rotate pliers as shown in figure 5. Remove clean air hose at cover.

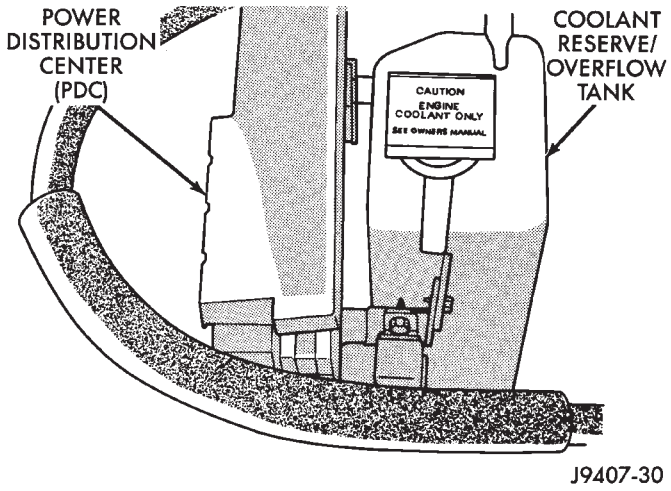

Fig. 2 PDC—XJ Models

(2) Disconnect vacuum lines at air cleaner housing.

(3) YJ Models: Release the three over-center type clamps securing the housing to the housing bracket. XJ Models: Remove the housing cover and remove air cleaner element. Remove two bolts and one nut.

(4) Release the air cleaner housing from the ambient air inlet and remove housing from vehicle.

INSTALLATION

(1) Position air cleaner housing to body and ambient air inlet.

(2) YJ Models: Lock the three over-center type clamps securing the housing to the housing bracket. XJ Models: Install two bolts and one nut to housing. Install air cleaner element and cover.

(3) Install vacuum lines to housing.

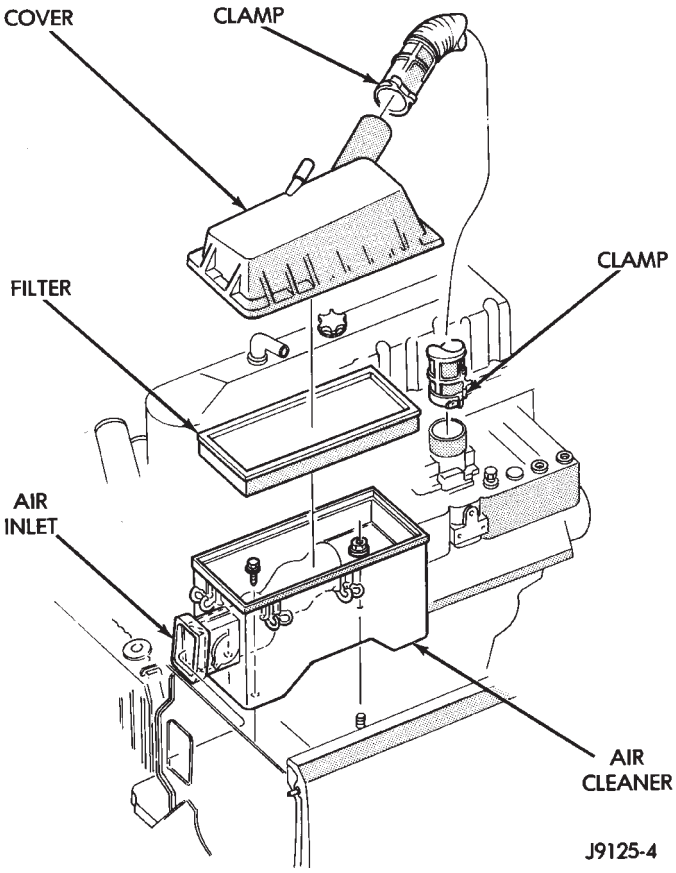

Fig. 3 Air Cleaner—XJ Models—Typical

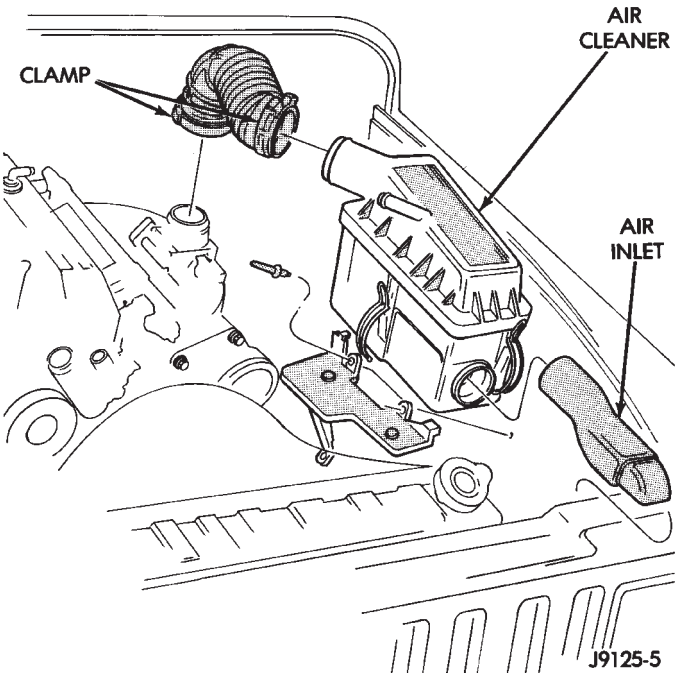

Fig. 4 Air Cleaner—YJ Models—Typical

(4) Install clean air hose and clamp to cover. Compress the clamp snugly with adjustable pliers as shown in figure 6.

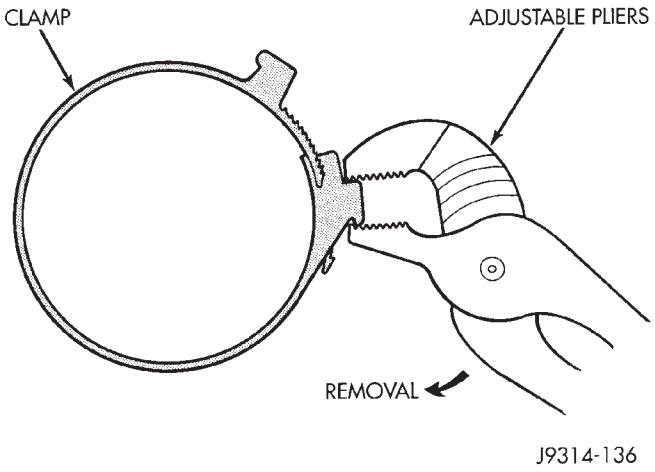

Fig. 5 Clamp Removal

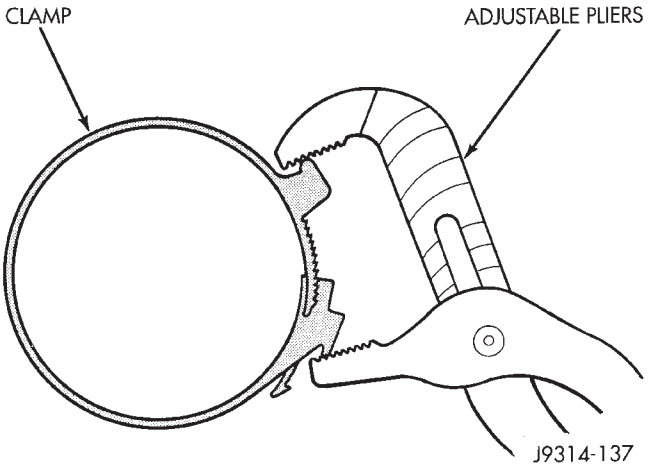

Fig. 6 Clamp Installation

AIR CLEANER ELEMENT

REMOVAL/INSTALLATION

(1) Pry back the six clips (YJ Models) or three clips (XJ Models) retaining the air cleaner cover to the air cleaner housing.

(2) Lift the cover up and position to the side.

(3) Remove air cleaner element.

(4) Clean the inside of air cleaner housing and its cover before installing new element.

(5) Reverse the preceding operation for installation. Be sure the air cleaner cover is properly seated to air cleaner housing.

AUTOMATIC SHUTDOWN (ASD) RELAY

The ASD relay is located in the power distribution center (Figs. 1 or 2) (PDC). For location of this relay within the PDC, refer to label on PDC cover.

BRAKE SWITCH

Refer to Group 5, Brakes for removal/installation procedures.

CAMSHAFT POSITION SENSOR

For removal/installation procedures, refer to Group 8D, Ignition System. See Camshaft Position Sensor.

INTAKE MANIFOLD AIR TEMPERATURE SENSOR

The intake manifold air temperature sensor is installed into the intake manifold plenum (Figs. 7 or 8).

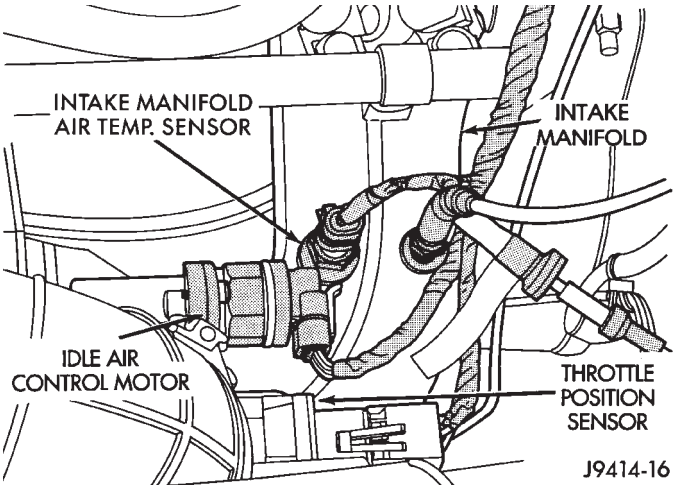

Fig. 7 Sensor Location—2.5L Engine

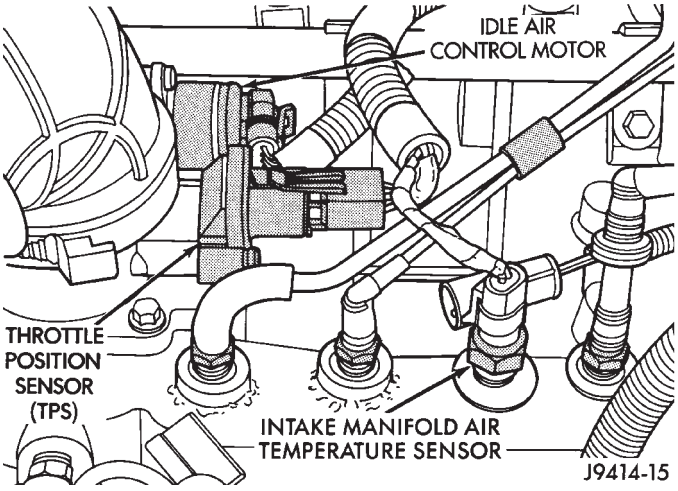

Fig. 8 Sensor Location—4.0L Engine

REMOVAL

(1) Disconnect the electrical connector from the sensor.

(2) Remove the sensor from the intake manifold.

INSTALLATION

(1) Install the sensor into the intake manifold. Tighten the sensor to 28 N·m (20 ft. lbs.) torque.

(2) Connect the electrical connector to the sensor.

CRANKSHAFT POSITION SENSOR

For description, operation and removal/installation procedures, refer to Group 8D, Ignition Systems in this manual.

ENGINE COOLANT TEMPERATURE SENSOR

The coolant temperature sensor is installed in the thermostat housing (Fig. 9).

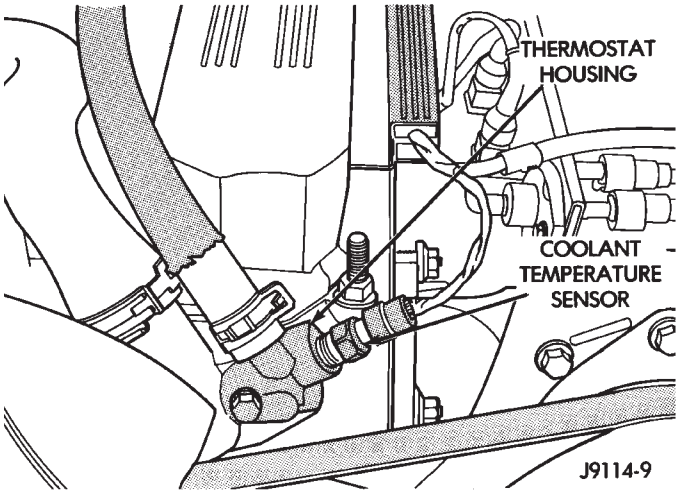

Fig. 9 Engine Coolant Temperature Sensor—Typical

REMOVAL

(1) Drain cooling system until the coolant level is below the cylinder head. Observe the **WARNINGS** in Group 7, Cooling.

(2) Disconnect the coolant temperature sensor wire connector.

(3) Remove the sensor from the thermostat housing (Fig. 9).

INSTALLATION

(1) Install coolant temperature sensor into the cylinder block. Tighten to 28 N·m (21 ft. lbs.) torque.

(2) Connect the wire connector.

(3) Fill the cooling system. Refer to Group 7, Cooling System.

FUEL FILTER

Refer to the Fuel Delivery System section of this group for removal/installation procedures.

FUEL INJECTOR

REMOVAL

(1) Remove the fuel rail. Refer to Fuel Rail Removal in this section.

(2) Remove the clip(s) that retain the fuel injector(s) to the fuel rail (Figs. 10 or 11).

INSTALLATION

(1) Install the fuel injector(s) into the fuel rail assembly and install retaining clip(s).

(2) If the same injector(s) is being reinstalled, install new o-ring(s).

(3) Install fuel rail. Refer to Fuel Rail Installation in this section.

(4) Start engine and check for fuel leaks.

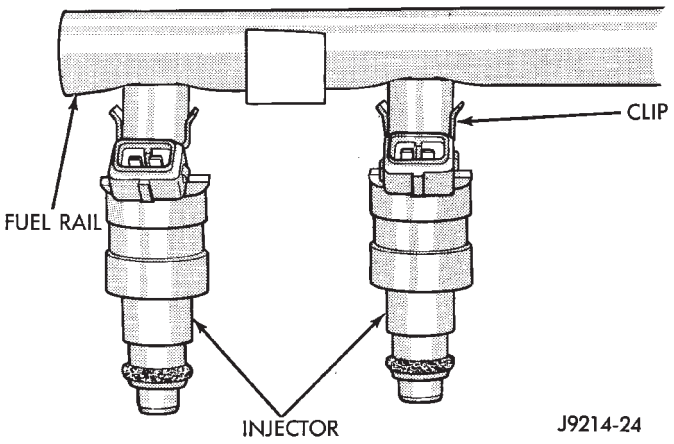

Fig. 10 Injector Mounting

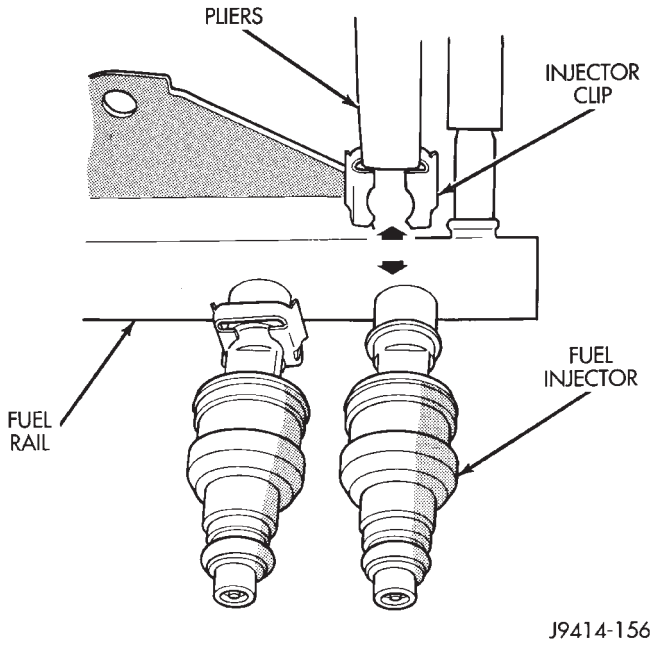

Fig. 11 Injector Retaining Clips—Typical Injector

FUEL PUMP MODULE

Refer to the Fuel Delivery System section of this group for removal/installation procedures.

FUEL PUMP RELAY

The fuel pump relay is located in the power distribution center (PDC) (Figs. 1 or 2). For location of this relay within the PDC, refer to label on PDC cover.

FUEL PRESSURE REGULATOR

WARNING: THE FUEL SYSTEM IS UNDER A CONSTANT PRESSURE (EVEN WITH THE ENGINE TURNED OFF). BEFORE SERVICING THE FUEL PRESSURE REGULATOR, THE FUEL SYSTEM PRESSURE MUST BE RELEASED.

To release fuel pressure, refer to the Fuel Delivery System section of this group. See Fuel System Pressure Release.

REMOVAL

The fuel pressure regulator is located at the front of the fuel rail (Fig 12). It is held to the fuel rail (mounted vertically) with a clamp and bolt (Fig. 13).

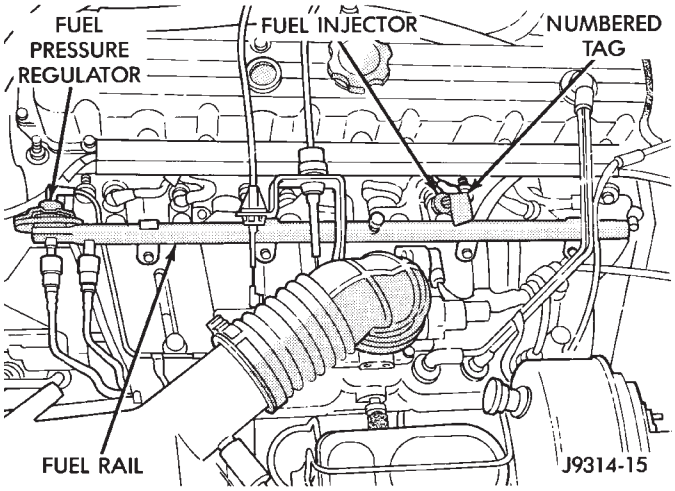

Fig. 12 Fuel Injector Harness—Typical

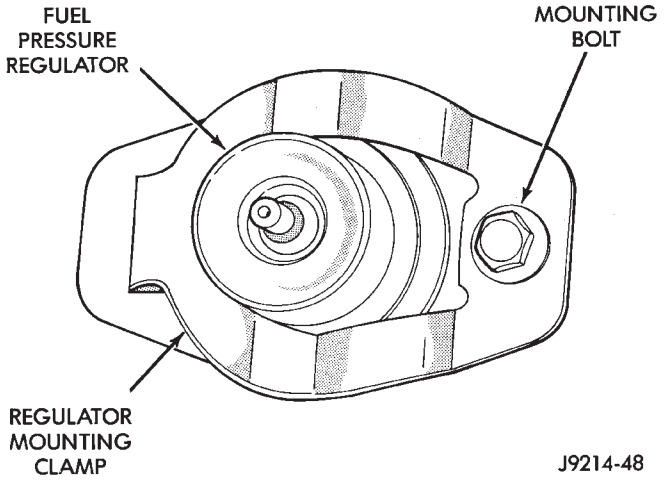

Fig. 13 Fuel Rail Assembly—Typical

(1) Perform the fuel pressure release procedure.
(2) Remove the vacuum line from the pressure regulator.
(3) Remove the clamp mounting bolt and regulator mounting clamp from the fuel rail (Fig. 13).
(4) Remove pressure regulator from fuel rail.
(5) Remove and discard the o-ring seals.

INSTALLATION

(1) Install new o-ring seals to pressure regulator.
(2) Install pressure regulator to fuel rail.
(3) Install retaining clamp and clamp bolt.
(4) Install vacuum line to pressure regulator.
(5) Start engine and check for leaks.

FUEL RAIL ASSEMBLY

REMOVAL

WARNING: THE FUEL SYSTEM IS UNDER CONSTANT FUEL PRESSURE (EVEN WITH THE ENGINE OFF) OF APPROXIMATELY 131-269 KPA (19-39 PSI). THIS PRESSURE MUST BE RELEASED BEFORE SERVICING THE FUEL RAIL.

(1) Remove fuel tank filler tube cap.
(2) Disconnect the negative battery cable from battery.
(3) Perform the Fuel System Pressure Release Procedure as described in the Fuel Delivery System section of this Group.
(4) Remove and numerically attach a tag (if fuel injector is not already tagged), the injector harness connectors. Do this at each injector (Fig. 12).
(5) Disconnect vacuum line from fuel pressure regulator (Fig. 12).
(6) Disconnect fuel supply line from fuel rail and the fuel return line from fuel pressure regulator (Fig. 12). Refer to Fuel Tubes/Lines/Hoses and Clamps, or Quick-Connect Fittings. These can both be found in the Fuel Delivery section of this group.
(7) Remove fuel rail mounting bolts.
On models with automatic transmissions, it may be necessary to remove automatic transmission throttle line pressure cable and bracket. This will aid in fuel rail assembly removal.
(8) Remove fuel rail by gently rocking until all the fuel injectors are out of the intake manifold.

INSTALLATION

(1) Position tips of all fuel injectors into the corresponding injector bore in the intake manifold. Seat injectors into manifold.
(2) Tighten fuel rail mounting bolts to 27 N·m (20 ft. lbs.) torque.
(3) Connect injector harness connectors to appropriate (tagged) injector.
(4) Connect both fuel lines to fuel rail. Refer to the Fuel Delivery section of this group for procedures.
(5) Connect vacuum supply line to fuel pressure regulator.
(6) Install protective cap to pressure test port fitting.
(7) Install fuel tank cap.
(8) Connect negative battery cable to battery.
(9) Start engine and check for fuel leaks.

FUEL SYSTEM PRESSURE RELEASE PROCEDURE

WARNING: THE FUEL SYSTEM IS UNDER A CONSTANT PRESSURE (EVEN WITH THE ENGINE OFF) OF APPROXIMATELY 100 KPA (14.5 PSI). BEFORE SERVICING THE FUEL PUMP, FUEL RAIL, FUEL LINES, FUEL FILTER OR FUEL INJECTOR, THE FUEL SYSTEM PRESSURE MUST BE RELEASED.

Refer to the Fuel Delivery System section of this group. See Fuel Pressure Release procedure.

FUEL TANKS

Refer to the Fuel Tank section of this group for removal/installation procedures.

FUEL TANK PRESSURE RELIEF/ROLLOVER VALVE

Refer to the Fuel Tank section of this group for removal/installation procedures.

FUEL TUBES/LINES/HOSES AND CLAMPS

Refer to the Fuel Delivery System section of this group for removal/installation procedures. Also refer to Quick-Connect Fittings in the Fuel Delivery section of this group.

IDLE AIR CONTROL (IAC) MOTOR

The IAC motor is mounted to the throttle body adjacent to the throttle position sensor (Fig. 14).

REMOVAL

(1) Disconnect the electrical connector from the IAC motor.

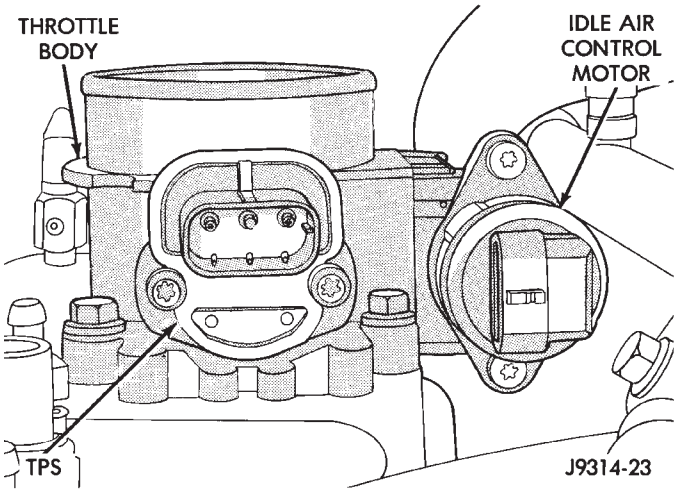

Fig. 14 Idle Air Control Motor—Removal/ Installation—Typical

(2) Remove IAC motor torx head mounting bolts.
(3) Remove IAC motor.

INSTALLATION

(1) Install IAC motor into throttle body and tighten retaining bolts.
(2) Connect electrical connector to IAC motor.

IGNITION COIL

Refer to Group 8D, Ignition Systems for removal/ installation procedures.

INTAKE MANIFOLD

Refer to Group 11, Exhaust System and Intake Manifold for removal/installation procedures.

MANIFOLD ABSOLUTE PRESSURE (MAP) SENSOR

The MAP sensor is located on the dash panel near the rear of the engine cylinder head (valve) cover (Fig. 15).

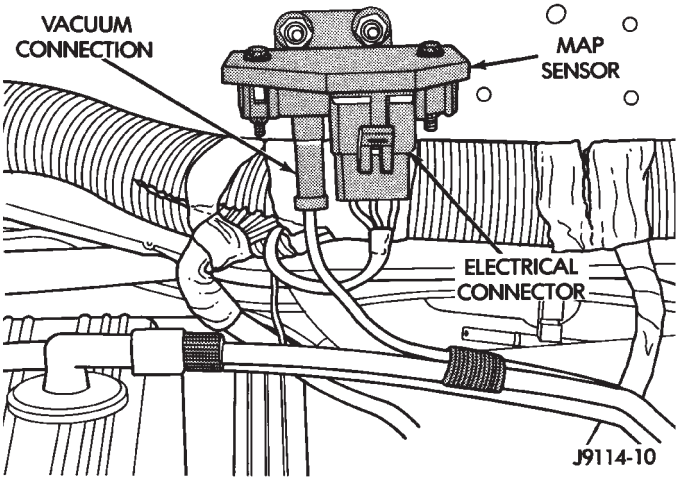

Fig. 15 MAP Sensor—Typical

REMOVAL

(1) Disconnect the MAP sensor electrical connector (Fig. 15).

(2) Disconnect the MAP sensor vacuum supply hose (Fig. 15).

(3) Remove the MAP sensor mounting bolts and remove MAP sensor.

INSTALLATION

(1) Install MAP sensor to dash panel and secure with mounting bolts.

(2) Install the MAP sensor vacuum supply hose.

(3) Connect the MAP sensor electrical connector.

OXYGEN (O2S) SENSOR

The O2S sensor is installed in the exhaust down pipe just below the exhaust manifold flange (Fig. 16).

REMOVAL

WARNING: THE EXHAUST MANIFOLD BECOMES VERY HOT DURING ENGINE OPERATION. ALLOW ENGINE TO COOL BEFORE REMOVING OXYGEN SENSOR.

(1) Raise and support the vehicle.

(2) Separate the electrical connectors.

(3) Remove the O2S sensor from the exhaust manifold. Snap-On oxygen sensor wrench (number YA 8875) may be used for removal and installation.

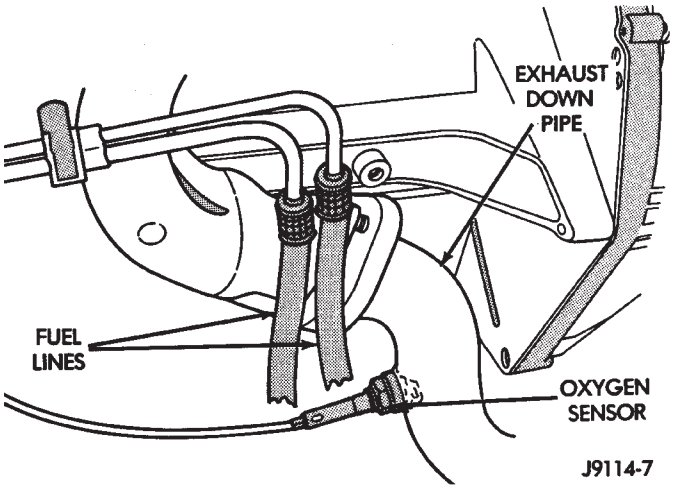

Fig. 16 Oxygen Sensor—Typical

INSTALLATION

Threads of new factory oxygen sensors are coated with anti-seize compound to aid in removal.

(1) Install the O2S sensor into the exhaust manifold and tighten to 30 N·m (22 ft. lbs.) torque.

(2) Connect the O2S sensor wire connector to the main harness.

(3) Lower the vehicle.

PARK NEUTRAL SWITCH

Refer to Group 21, Transmissions for park neutral switch service.

POWER STEERING PRESSURE SWITCH—2.5L ENGINE ONLY

The power steering pressure switch is installed in the power steering high-pressure hose (Figs. 17 or 18).

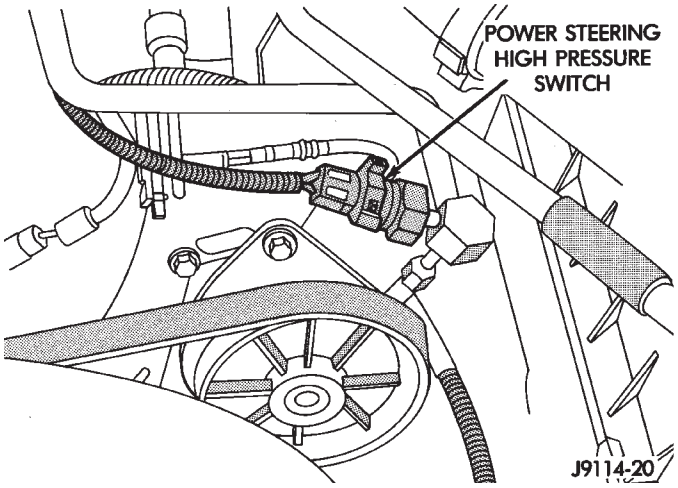

Fig. 17 Power Steering Pressure Switch—YJ Models

REMOVAL

(1) Disconnect the electrical connector from the power steering pressure switch.

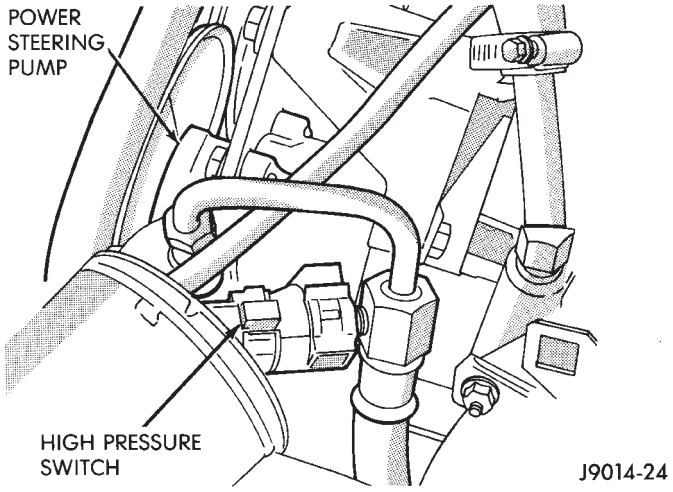

Fig. 18 Power Steering Pressure Switch—XJ Models

(2) Place a small container or shop towel beneath the switch to collect any excess fluid.

(3) Remove the switch.

INSTALLATION

(1) Install the power steering switch.

(2) Connect the electrical connector to the switch.

(3) Check power steering fluid and add as necessary.

(4) Start the engine and again check power steering fluid. Add fluid if necessary.

POWERTRAIN CONTROL MODULE (PCM)

On XJ models, the PCM is located in the engine compartment next to the air cleaner (Fig. 19). On YJ models, the PCM is located in the engine compartment behind the windshield washer fluid reservoir (Fig. 20).

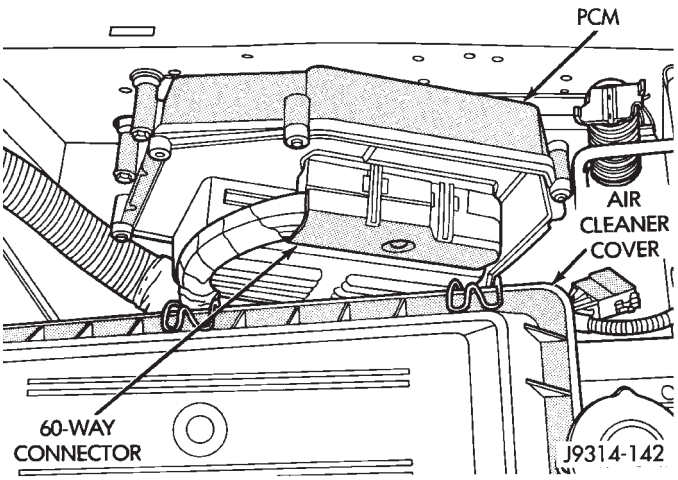

Fig. 19 PCM Location—XJ Models

REMOVAL

(1) Disconnect the negative battery cable at the battery.

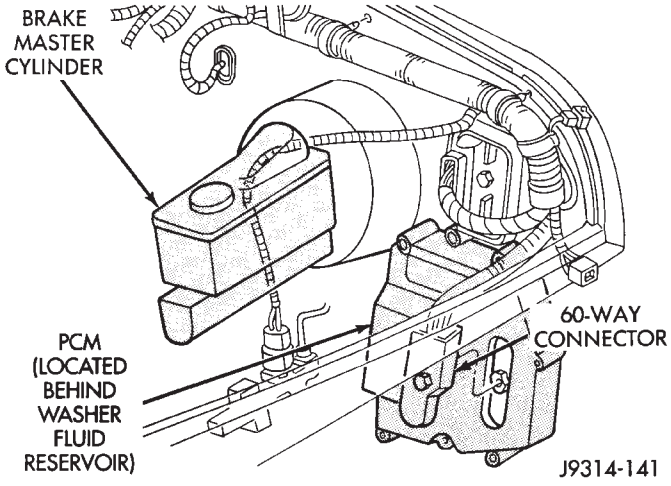

Fig. 20 PCM Location—YJ Models

(2) YJ Models Only: Remove the windshield washer fluid tank.

(3) Loosen the 60-Way connector mounting bolt (Figs. 19 or 20).

(4) Remove the electrical connector by pulling straight back.

(5) Remove the three PCM mounting bolts.

(6) Remove PCM.

INSTALLATION

(1) After the PCM electrical connector has been separated from the PCM, inspect the pins for corrosion, being spread apart, bent or misaligned. Also inspect the pin heights in the connector. If the pin heights are different, this would indicate a pin has separated from the connector. Repair as necessary.

(2) Install PCM. Tighten three mounting bolts to 1 N·m (9 in. lbs.) torque.

(3) Engage 60-way connector into PCM. Tighten connector mounting bolt to 4 N·m (35 in. lbs.) torque.

(4) YJ Models: Install windshield washer fluid tank.

(5) Connect negative cable to battery.

QUICK-CONNECT FITTINGS

Refer to the Fuel Delivery System section of this group for removal/installation procedures.

THROTTLE BODY

REMOVAL

(1) Disconnect the negative battery cable.

(2) Disconnect air cleaner hose from throttle body.

(3) Disconnect idle air control motor and throttle position sensor wire connectors.

(4) Disconnect accelerator cable, throttle cable (automatic transmission) and speed control cable (if equipped) from throttle arm (Fig. 21).

(5) Remove throttle body mounting bolts (Fig. 22), throttle body and gasket. Discard old gasket.

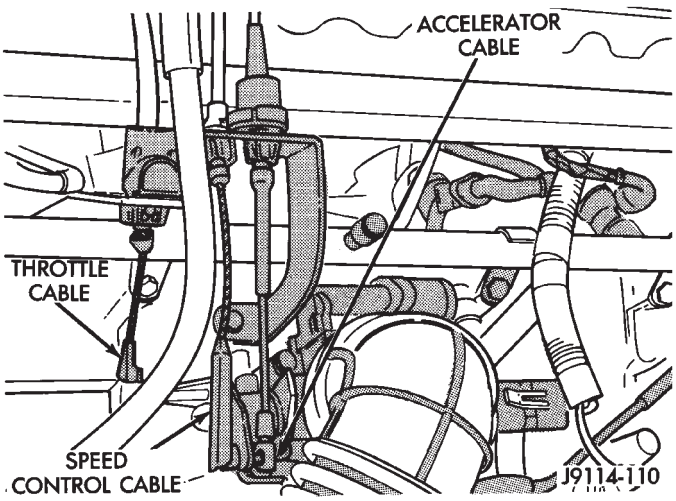

Fig. 21 Cables at Throttle Body

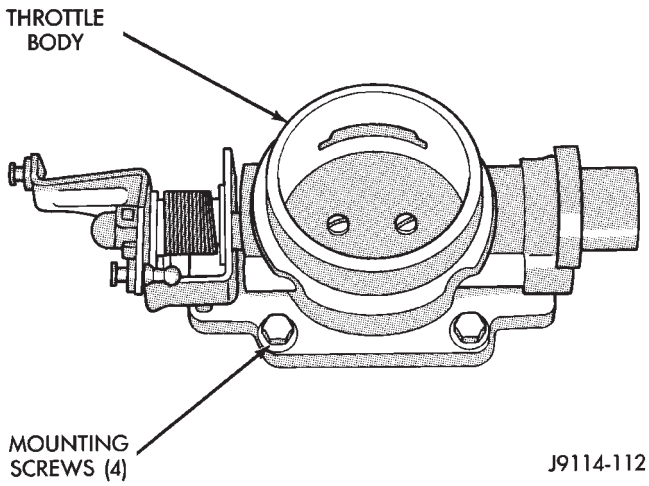

Fig. 22 Throttle Body—Removal/Installation—Typical

INSTALLATION

(1) Install throttle body and new gasket. Tighten throttle body mounting bolts to 12 N·m (9 ft. lbs.) torque.

(2) Connect idle air control motor and throttle position sensor wire connectors.

(3) Connect throttle linkage to throttle arm.

CAUTION: When the automatic transmission throttle cable is connected, it MUST be adjusted.

(4) If equipped with an automatic transmission, connect and adjust the transmission line pressure cable. Refer to Group 21, Transmissions for adjustment procedure.

(5) Install air cleaner hose to throttle body.

(6) Connect negative battery cable to battery.

THROTTLE POSITION SENSOR (TPS)

The TPS is mounted to the throttle body (Figs. 23 or 24).

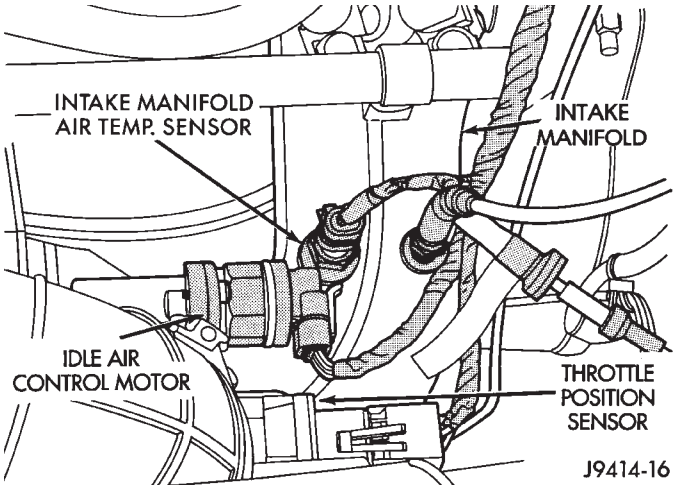

Fig. 23 TPS Location—2.5L Engine

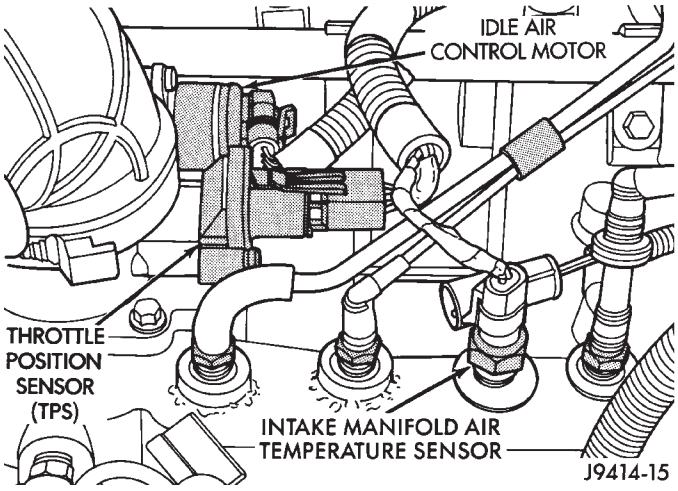

Fig. 24 TPS Location—4.0L Engine

REMOVAL

(1) Disconnect TPS electrical connector.

(2) Remove TPS mounting bolts.

(3) Remove TPS.

INSTALLATION

The throttle shaft end of the throttle body slides into a socket in the TPS (Fig. 25). The TPS must be installed so that it can be rotated a few degrees. (If the sensor will not rotate, install the sensor with the throttle shaft on the other side of the socket tangs). The TPS will be under slight tension when rotated.

(1) Install the TPS and retaining bolts.

(2) Connect TPS electrical connector to TPS.

(3) Manually operate the throttle (by hand) to check for any TPS binding before starting the engine.

TORQUE CONVERTER CLUTCH RELAY

On YJ models, the TCC relay is located in the engine compartment. It is attached to the cowl panel with one bolt (Fig. 26). On XJ models, the TCC relay is located in the power distribution center (PDC)

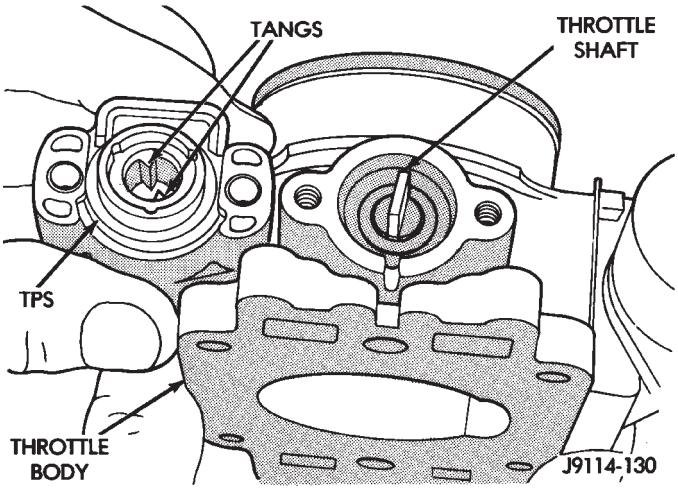

Fig. 25 Throttle Position Sensor—Installation

(Fig. 27). For location of this relay within the PDC, refer to label on PDC cover.

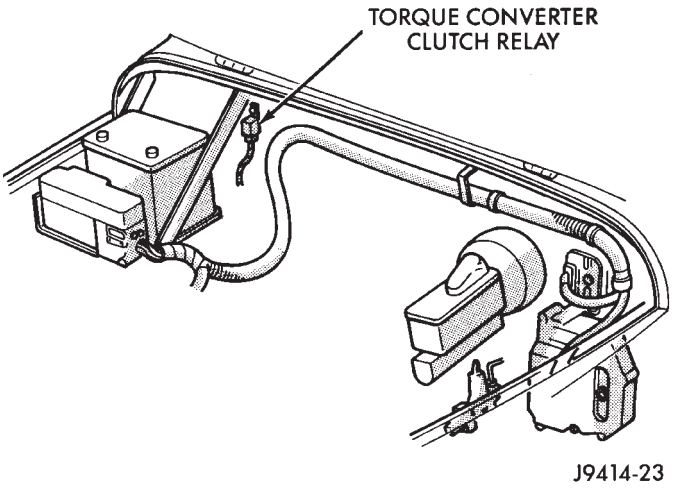

Fig. 26 TCC Relay Location—YJ Models

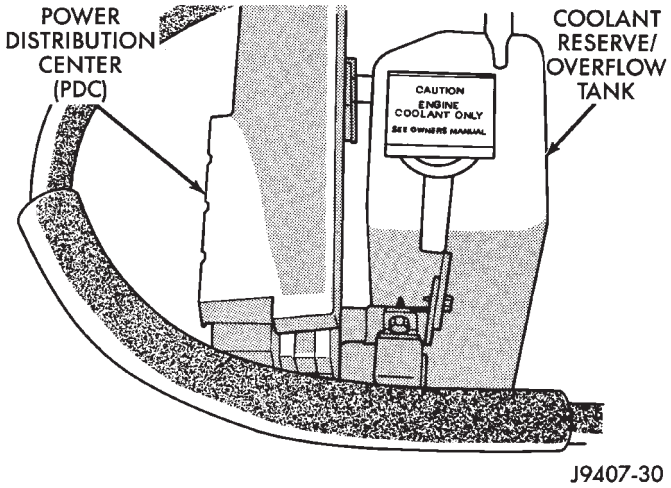

Fig. 27 Power Distribution Center—XJ Models

VEHICLE SPEED SENSOR

The vehicle speed sensor (Fig. 28) is located on the extension housing of the transmission on 2WD models. It is located on the transfer case on 4WD models.

REMOVAL

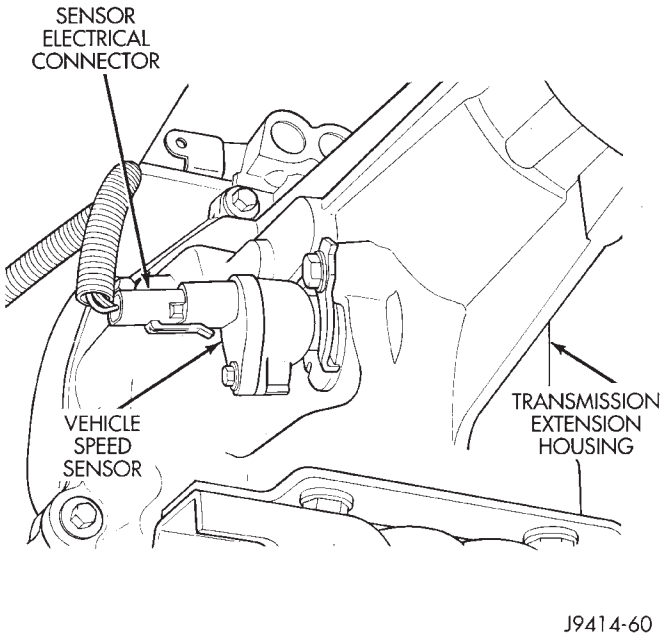

Fig. 28 Vehicle Speed Sensor Location—Typical

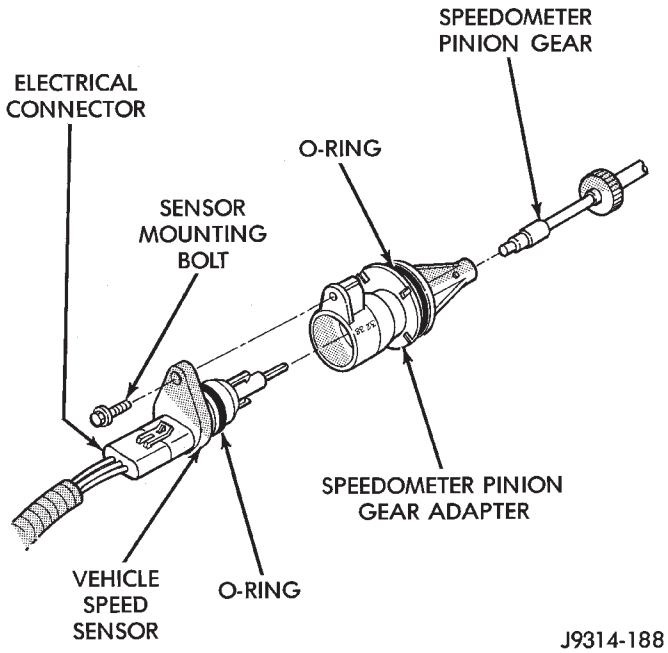

Fig. 29 Sensor Removal/Installation—Typical

(1) Raise and support vehicle.

(2) Disconnect the electrical connector from the sensor.

(3) Remove the sensor mounting bolt (Fig. 29).

(4) Remove the sensor (pull straight out) from the

speedometer pinion gear adapter (Fig. 29). Do not remove the gear adapter from the transmission.

INSTALLATION

(1) Clean the inside of speedometer pinion gear adapter before installing speed sensor.

(2) Install sensor into speedometer gear adapter and install mounting bolt. **Before tightening bolt, verify speed sensor is fully seated (mounted flush) to speedometer pinion gear adapter.**

(3) Tighten sensor mounting bolt to 2.2 N·m (20 in. lbs.) torque.

(4) Connect electrical connector to sensor.

SPECIFICATIONS

GENERAL INFORMATION

The following specifications are published from the latest information available at the time of publication. **If anything differs between the specifications found on the Vehicle Emission Control Information (VECI) label and the following specifications, use specifications on VECI label.** The VECI label is located in the engine compartment.

FUEL TANK CAPACITIES

FUEL TANK	GALLONS*	LITERS*
XJ	20.02	76
YJ	20.0	76
YJ	15.0	57

*Nominal refill capacities are shown. A variation may be observed from vehicle to vehicle due to manufacturing tolerances, ambient temperature and refill procedure.

J9314-143

FUEL SYSTEM

COMPONENT	RATING
MFI Fuel System Pressure (with vacuum applied to regulator)	214 kPa (31 psi)
MFI Fuel System Pressure (without vacuum applied to pressure regulator)	262-289 kPa (38-42 psi)
MFI Fuel System Pressure Drop (fuel pump not engaged).....	Up to 138 kPa (20 psi)
Pressure-Vacuum Filler Cap Relief..	10 kPa (1.5 psi) pressure 6 kPa (1.8 in. Hg) vacuum

J9514-2

TORQUE

DESCRIPTION	TORQUE
Accelerator Pedal Bracket Mounting Nuts	4 N·m (36 in. lbs.)
Intake Manifold Air Temperature Sensor	28 N·m (20 ft. lbs.)
Engine Coolant Temperature Sensor	28 N·m (21 ft. lbs.)
PCM Mounting Screws	1 N·m (9 in. lbs.)
PCM 60-Way Connector Screw	4 N·m (35 in. lbs.)
Fuel Filter Retaining Strap	12 N·m (106 in. lbs.)
Fuel Pump/Gauge Send. Unit-to-Fuel Tank Screws (YJ)	2 N·m (18 in. lbs.)
Fuel Pump Line Nut	25 N·m (18 ft. lbs.)
Fuel Rail Mounting Bolts	27 N·m (20 ft. lbs.)
Fuel Tank Mounting Strap Nut (XJ)	11 N·m (100 in. lbs.)
Fuel Tank Skid Plate (YJ)	7 N·m (65 in. lbs.)
Fuel Tank Mounting Strap Nut (YJ)	18 N·m (13 ft. lbs.)
Oxygen Sensor	30 N·m (23 ft. lbs.)
Throttle Body Mtg. Bolts	12 N·m (9 ft. lbs.)

J9414-17

PROPELLER SHAFTS

CONTENTS

	page		page
GENERAL INFORMATION	1	TORQUE SPECIFICATIONS	15
SERVICE DIAGNOSIS	3	UNIVERSAL JOINT REPLACEMENT	10
SERVICE PROCEDURES	8		

GENERAL INFORMATION

PROPELLER SHAFTS

The function of a propeller shaft is to transmit power from one point to another. The shaft is designed to send torque from the transmission (transfer case on 4WD vehicles) to the axle (Fig. 1,2).

The propeller shaft must operate through constantly changing relative angles between the transmission and axle. It must also be capable of changing length while transmitting torque. The axle rides suspended by springs in a floating motion. The propeller

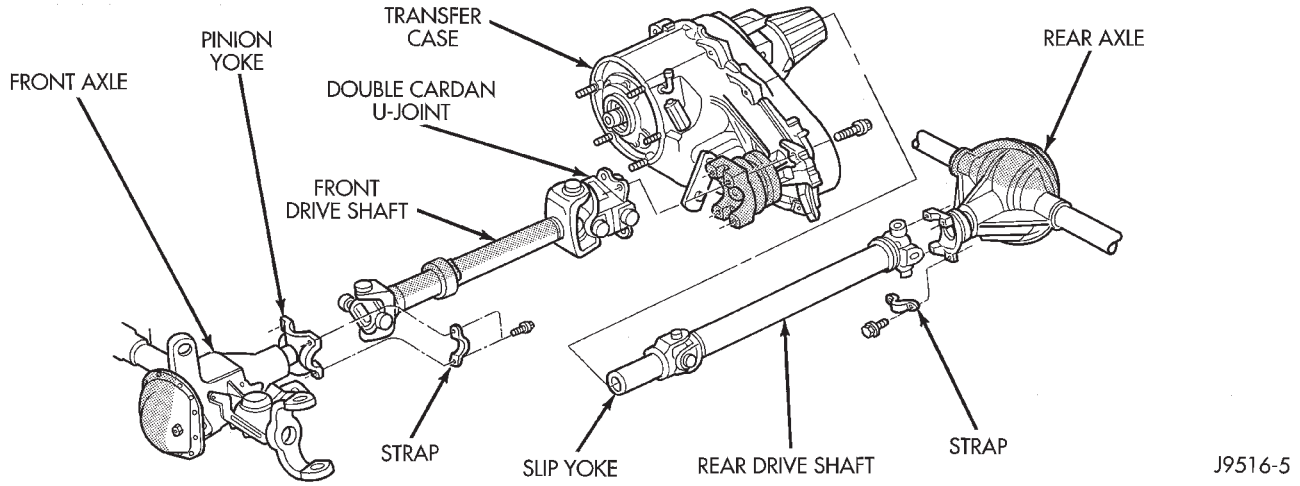

Fig. 1 Propeller Shafts XJ

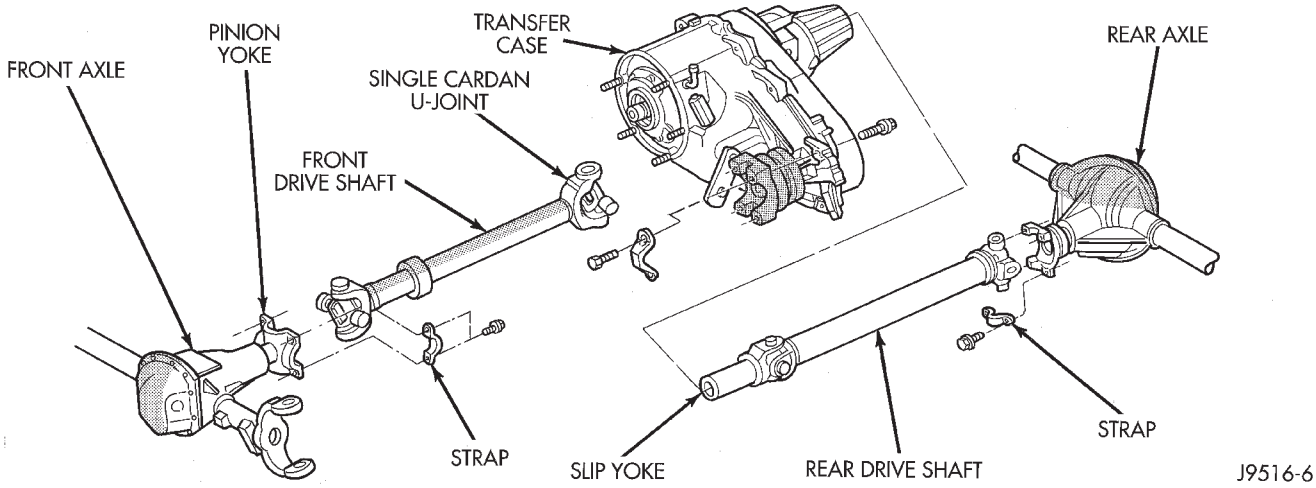

Fig. 2 Propeller Shafts YJ

shaft must be able to change operating angles when going over various road surfaces. This is done through universal joints, which permit the propeller shaft to operate at different angles. The slip joints (or yokes) permit contraction or expansion (Fig. 1,2).

Tubular propeller shafts are balanced by the manufacturer with weights spot welded to the tube.

The propeller shaft is designed and built with the yoke lugs in line with each other which is called phasing. This design produces the smoothest running condition, an out of phase shaft can cause a vibration.

Before undercoating a vehicle, the propeller shaft and the U-joints should be covered. This will prevent the undercoating from causing an unbalanced condition and vibration.

CAUTION: Use exact replacement hardware for attaching the propeller shafts. The specified torque must always be applied when tightening the fasteners.

UNIVERSAL JOINTS

Two different types of U-joints are used with the propeller shafts:

- Single cardan U-joint (Fig. 3)
- Double cardan U-joint (Fig. 4)

LUBRICATION

The factory installed U-joints are lubricated for the life of the vehicle and do not need re-lubrication. All U-joints should be inspected for leakage and damage each time the vehicle is serviced. If seal leakage or damage exists, the U-joint should be replaced.

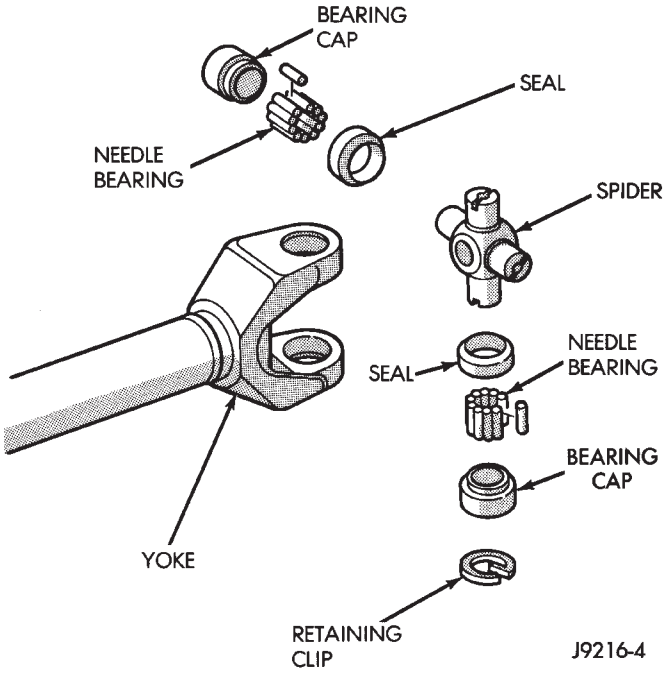

Fig. 3 Single Cardan Universal Joint

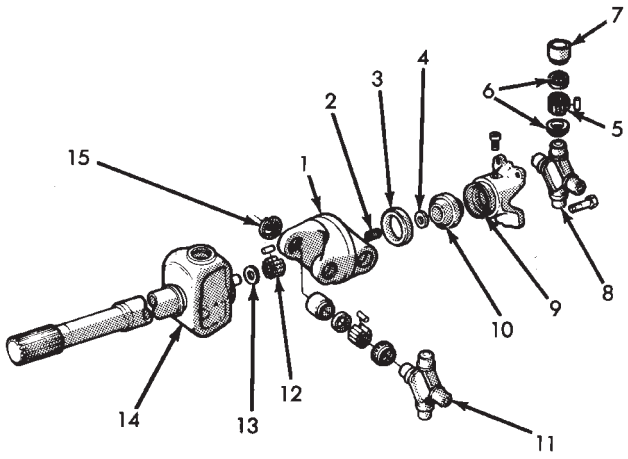

Fig. 4 Double Cardan (CV) Universal Joint

SERVICE DIAGNOSIS

INDEX

page

Runout 4
Unbalance 3
Universal Joint Angle Measurement 4
Vibration 3

VIBRATION

Tires that are out-of-round or wheels that are unbalanced will cause a low frequency vibration. Refer to Group 22, Wheels and Tires for additional information.

Brake drums that are unbalanced will cause a harsh, low frequency vibration. Refer to Group 5, Brakes for additional information.

Driveline vibration can also result from loose or damaged engine mounts. Refer to Group 21, Transmissions for additional information.

Propeller shaft vibration will increase as the vehicle speed is increased. A vibration that occurs within a specific speed range is not caused by propeller shaft unbalance. Defective universal joints or an incorrect propeller shaft angle are usually the cause.

UNBALANCE

If propeller shaft unbalance is suspected, it can be verified with the following procedure.

Removing and re-indexing the propeller shaft 180° may eliminate some vibrations.

- Clean all the foreign material from the propeller shaft and the universal joints.
- Inspect the propeller shaft for missing balance weights, broken welds, and bent areas. **If the propeller shaft is bent, it must be replaced.**
- Ensure the universal joints are not worn, are properly installed, and are correctly aligned with the shaft.
- Check the universal joint clamp screws torque

(1) Raise the vehicle.

(2) Remove the wheel and tires assembly. Install the wheel lug nuts to retain the brake drums.

(3) Mark and number the shaft six inches from the yoke end at four positions 90° apart.

(4) Run and accelerate the vehicle until vibration occurs. Note the intensity and speed the vibration occurred. Stop the engine.

(5) Install a screw clamp at position 1 (Fig. 1).

(6) Start the engine and re-check for vibration. If there is little or no change in vibration, move the clamp to one of the other three positions. Repeat the vibration test.

(7) If there is no difference in vibration at the other positions, the vibration may not be propshaft unbalance.

DRIVELINE VIBRATION

Drive Condition	Possible Cause	Correction
PROPELLER SHAFT	a. Undercoating or other foreign material on shaft.	a. Clean exterior of shaft and wash with solvent.
	b. Loose U-joint clamp screws.	b. Tighten screws properly.
	c. Loose or bent U-joint yoke or excessive runout.	c. Install replacement yoke.
	d. Incorrect drive line angularity.	d. Correct angularity
	e. Rear spring center bolt not in seat.	e. Loosen spring U-bolts and seat center bolts.
	f. Worn U-joint bearings.	f. Replace U-joint.
	g. Propeller shaft damaged (bent tube) or out of balance.	g. Install replacement propeller shaft.
	h. Broken rear spring.	h. Replace rear spring.
	i. Excessive runout or unbalanced condition.	i. Reindex propeller shaft 180°, test and correct as necessary.
	j. Excessive drive pinion gear shaft yoke runout.	j. Reindex propeller shaft 180° and evaluate.
UNIVERSAL JOINT NOISE	a. U-joint clamp screws loose.	a. Tighten screws with specified torque.
	b. Lack of lubrication.	b. Replace U-joint.

J9216-7

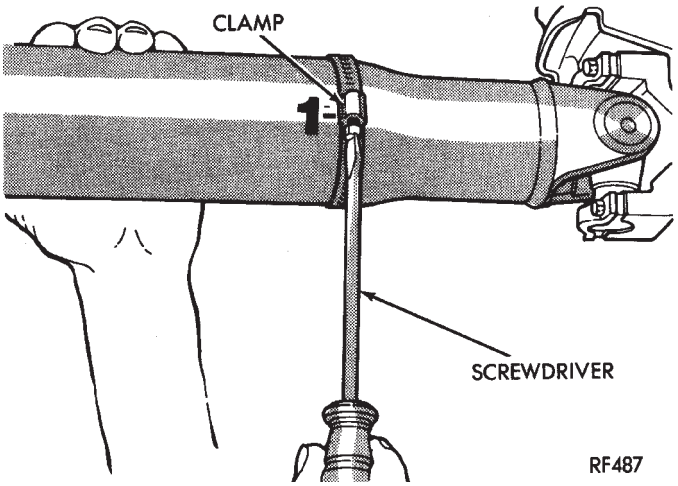

Fig. 1 Clamp Screw At Position 1

(8) If the vibration decreased, install a second clamp (Fig. 2) and repeat the test.

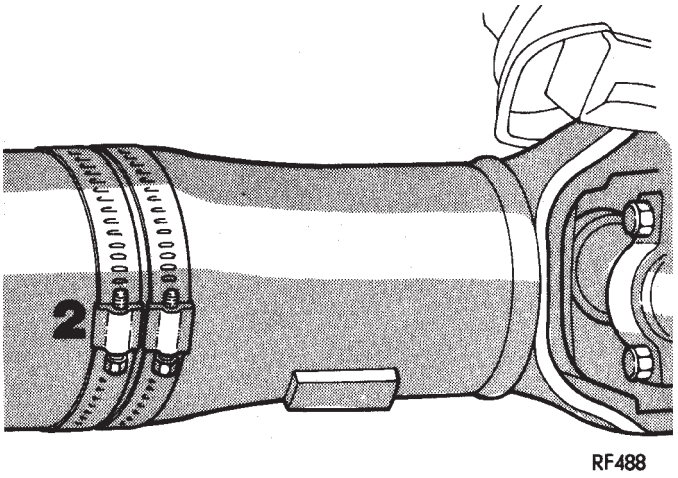

Fig. 2 Two Clamp Screws At The Same Position

(9) If the clamps cause an additional unbalance, separate the clamps (1/4 inch above and below the mark). Repeat the vibration test (Fig. 3).

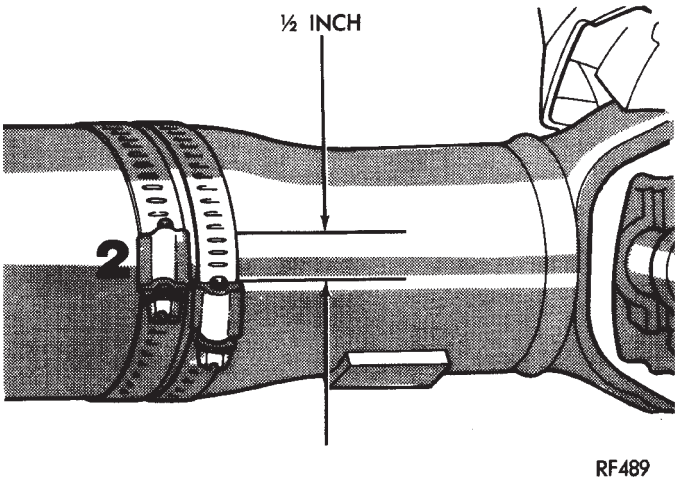

Fig. 3 Clamp Screws Separated

(10) Increase distance between the clamp screws and repeat the test until the amount of vibration is at the lowest level. Bend the slack end of the clamps so the screws will not loosen.

(11) Install the wheel and tires. Lower the vehicle.

(12) If the amount of vibration remains unacceptable, apply procedures at the front end of the propeller shaft.

RUNOUT

(1) Remove dirt, rust, paint, and undercoating from the propeller shaft surface. Areas where the dial indicator will contact the shaft must be clean.

(2) The dial indicator must be installed perpendicular to the shaft surface.

(3) Measure runout at the center and ends away from welds.

(4) Refer to Runout Specifications chart.

(5) Replace the propeller shaft if the runout exceeds the limit.

RUNOUT SPECIFICATIONS

Front of shaft	0.010 in. (0.25 mm)
Center of shaft	0.015 in. (0.38 mm)
Rear of shaft	0.010 in. (0.25 mm)

NOTE: Measure front/rear runout approximately 3 inches (76 mm) from the weld seam at each end of the shaft tube for tube lengths over 30 inches. Under 30 inches the max. runout is 0.20 inch for full length of the tube.

J9116-15

UNIVERSAL JOINT ANGLE MEASUREMENT

INFORMATION

When two shafts come together at any common joint, the bend that is formed is called the operating angle. The larger the angle, the larger the amount of acceleration and deceleration of the joint. This speeding up and slowing down of the joint must be cancelled to produce a smooth power flow. This is done through phasing and proper universal joint working angles.

A propeller shaft is properly phased when the yoke ends are on the same plane or in line. A twisted shaft will throw the yokes out of phase and cause a noticeable vibration.

When taking universal joint angle measurements or checking phasing with two piece shafts, consider each shaft separately. On 4WD vehicles, the front shaft input (pinion shaft) angle has priority over the caster angle.

Ideally the driveline system should have;

- Angles that are in equal or opposite within 1 degree of each other
- Have a 3 degree maximum operating angle

• Have at least a 1/2 degree continuous operating (propeller shaft) angle

Engine speed (R.P.M.) is the main factor though in determining maximum allowable operating angles. As a guide to maximum normal operating angles refer to the chart listed (Fig. 4).

PROPELLER SHAFT R.P.M.	MAX. NORMAL OPERATING ANGLES
5000	3°
4500	3°
4000	4°
3500	5°
3000	5°
2500	7°
2000	8°
1500	11°

J9316-4

Fig. 4 Maximum Angles and R.P.M.

INSPECTION

Before measuring universal joint angles, the following must be done.

• Inflate all tires to correct pressure

• Check angles in the same loaded or unloaded condition as when the vibration occurred. Propshaft angles will change according to the amount of load in the vehicle. Always check angles in loaded and unloaded conditions.

• Check the condition of all suspension components and verify all fasteners are torqued to specifications.

• Check the condition of the engine and transmission mounts and verify all fasteners are torqued to specifications.

MEASUREMENT

To accurately check driveline alignment, raise and support the vehicle at the axles as level as possible. Allow the wheels and propeller shaft to turn. Remove any external bearing snap rings (if equipped) from universal joint so protractor base sits flat.

(1) Rotate the shaft until transmission/transfer case output yoke bearing is facing downward.

Always make measurements from front to rear.

(2) Place Inclinometer on yoke bearing (A) parallel to the shaft (Fig. 5). Center bubble in sight glass and record measurement.

This measurement will give you the transmission or OUTPUT YOKE ANGLE (A).

(3) Rotate propeller shaft 90 degrees and place Inclinometer on yoke bearing parallel to the shaft (Fig. 6). Center bubble in sight glass and record measurement. This measurement can also be taken at the rear end of the shaft.

This measurement will give you the PROPELLER SHAFT ANGLE (C).

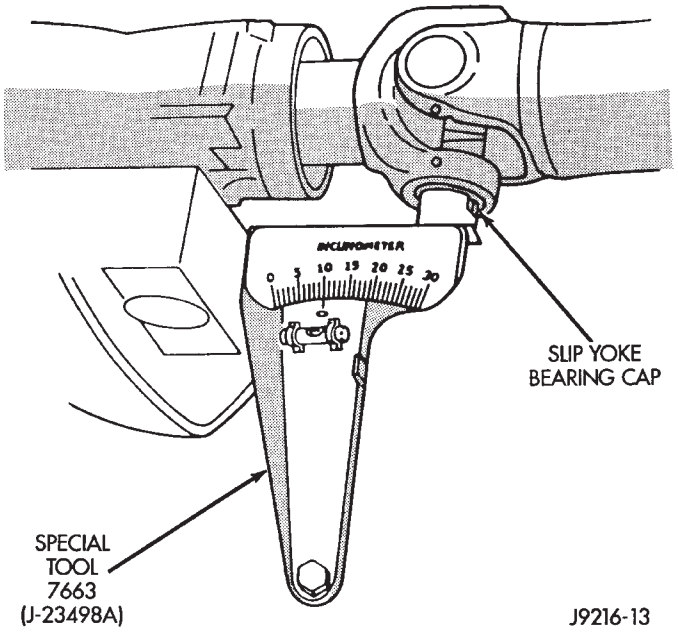

Fig. 5 Front (Output) Angle Measurement (A)

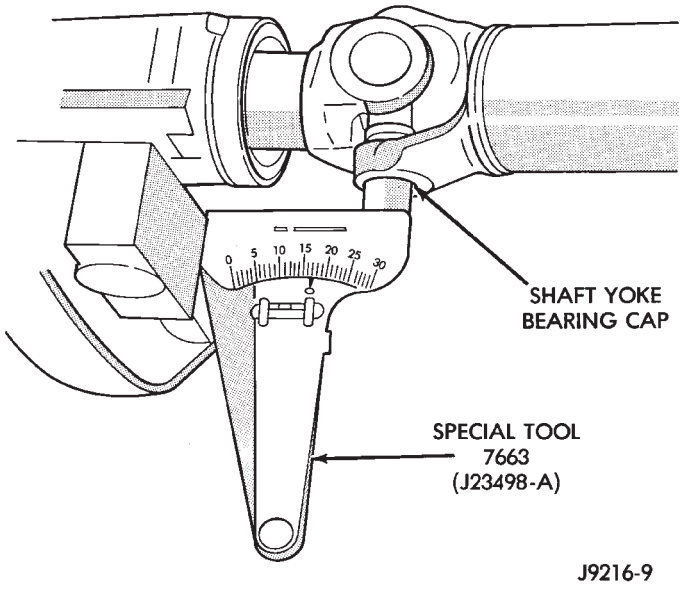

Fig. 6 Propeller Shaft Angle Measurement (C)

(4) Subtract smaller figure from larger (C minus A) to obtain transmission OUTPUT OPERATING ANGLE.

(5) Rotate propeller shaft 90 degrees and place Inclinometer on pinion yoke bearing parallel to the shaft (Fig. 7). Center bubble in sight glass and record measurement.

This measurement will give you the pinion shaft or INPUT YOKE ANGLE (B).

(6) Subtract smaller figure from larger (C minus B) to obtain axle INPUT OPERATING ANGLE.

Refer to rules given below and the example in (Fig. 8) for additional information.

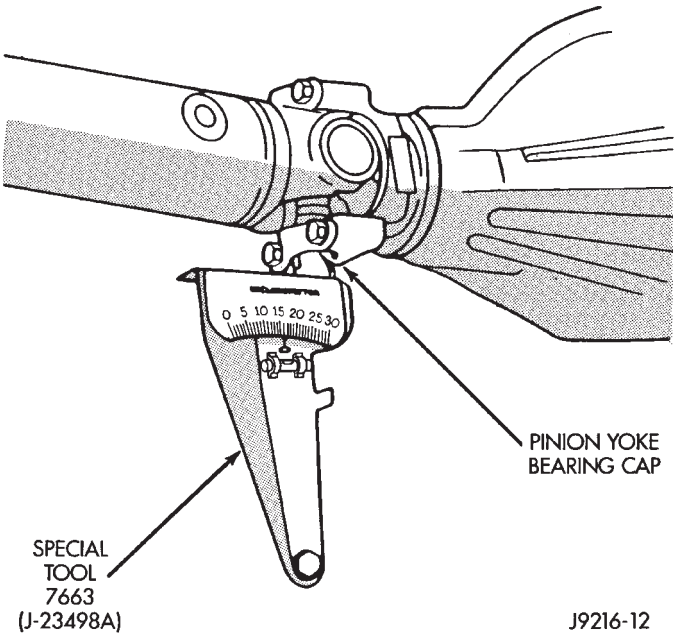

Fig. 7 Rear (Input) Angle Measurement (B)

- Good cancellation of u-joint operating angles (within 1°)
- Operating angles less than 3°
- At least 1/2 of one degree continuous operating (propeller shaft) angle

ADJUSTMENT AT AXLE WITH LEAF SPRINGS

Adjust the pinion shaft angle at the springs with tapered shims (Fig. 9). Install tapered shims between the springs and axle pad to correct the angle. Refer to Group 3, Rear Suspension and Axle for additional information.

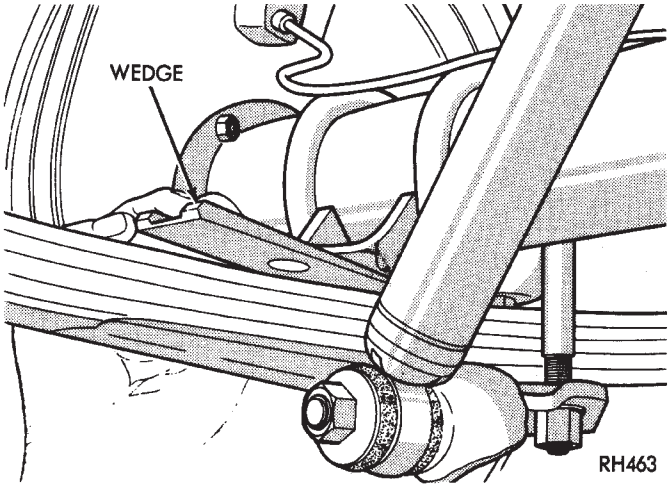

Fig. 9 Angle Adjustment at Leaf Springs

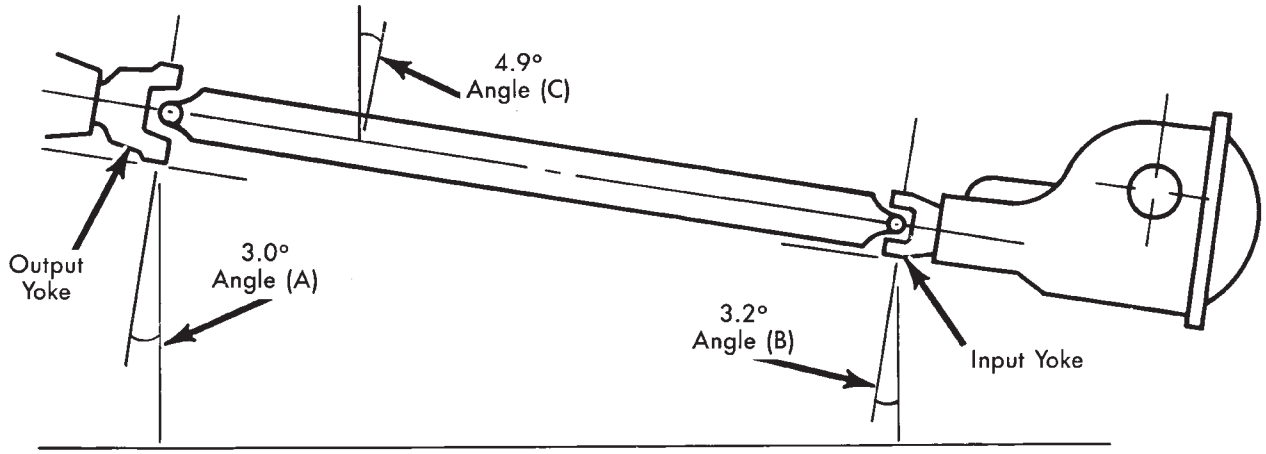

(A) Output Yoke	= 3.0°	or	4.9°
(C) Prop. Shaft	= 4.9°		-3.0°
Transmission Output Operating Angle			1.9°

(B) Axle Input Yoke	= 3.2°	or	4.9°
(C) Prop. Shaft	= 4.9°		-3.2°
Axle Input Operating Angle			1.7°

Trans. Output Operating Angle	1.9°
Axle Input Operating Angle	-1.7°
Amount of U-Joint Cancellation	0.2°

J9316-3

Fig. 8 Universal Joint Angle Example

ADJUSTMENT—XJ FRONT SHAFT

Adjust the pinion gear angle at the lower suspension arms with shims (Fig. 10). Adding shims will decrease the pinion gear shaft angle but will increase the caster angle. The pinion gear shaft angle has priority over the caster angle.

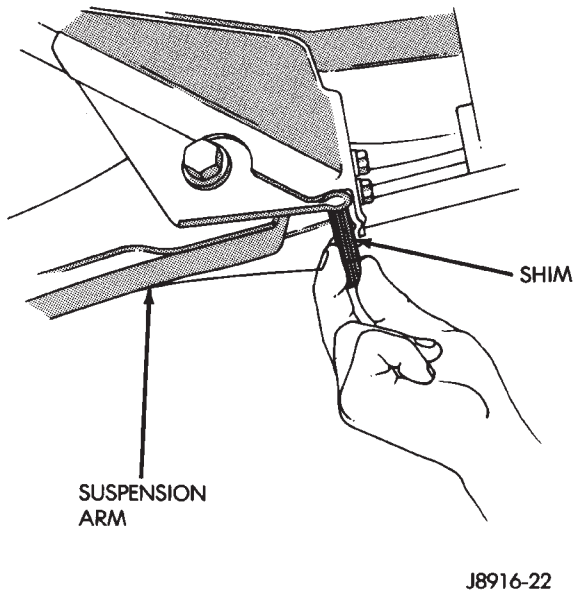

Fig. 10 Angle Adjustment—XJ Vehicles

SERVICE PROCEDURES

PRECAUTIONS

Use exact replacement hardware for attaching the propeller shafts. Exact replacement will ensure safe operation. The specified torque must always be applied when tightening the fasteners.

Put reference marks on the propshaft yoke and axle or transmission yoke before service (Fig. 1). This will assure correct phasing and eliminate possible vibration.

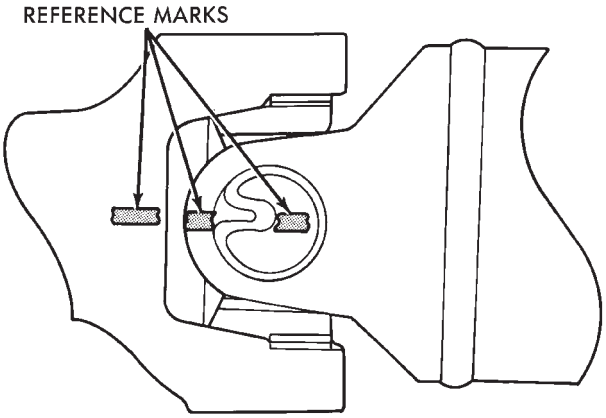

Fig. 1 Reference Marks on Yokes

CAUTION: Do not allow the propeller shaft to drop or hang from either universal joint during removal. Attach it to the vehicle underside with wire to prevent damage to the universal joints.

CAUTION: It is very important to protect the machined, external surface of the slip yoke from damage after propeller shaft removal. If damaged, the transmission extension seal could be damaged and cause a leak.

FRONT—XJ VEHICLES

REMOVAL

(1) Raise the vehicle.

(2) Scribe alignment marks on the yokes at the transfer case. Place marks at the pinion shaft and at each end of the propeller shaft. These marks will be used for installation reference (Fig. 2).

(3) Remove the U-joint strap bolts at the pinion shaft yoke.

(4) Disconnect the propeller shaft at the transfer case and remove the propeller shaft.

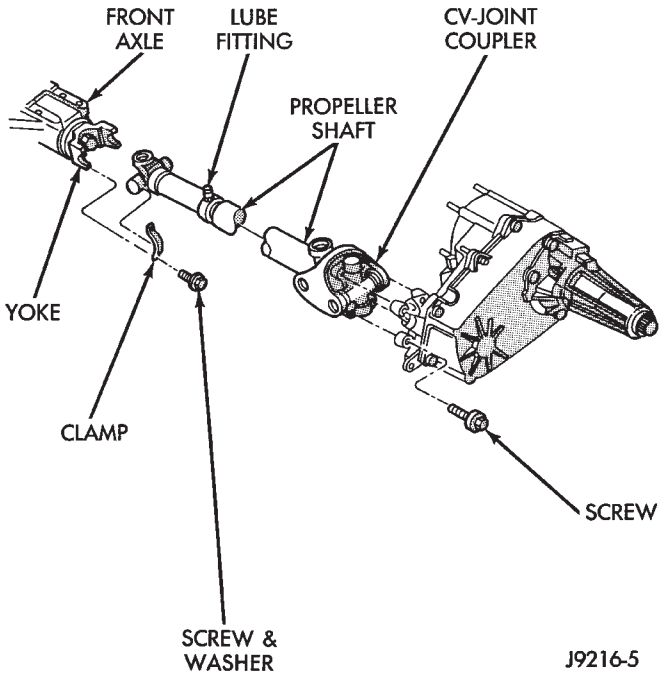

Fig. 2 Front Propeller Shaft

INSTALLATION

(1) Position the propeller shaft with the yoke reference marks aligned (Fig. 1). Install the propeller shaft.

Replacement U-joint straps and bolts must be installed.

(2) Tighten the U-joint strap/clamp bolts at the axle yoke to 19 N·m (14 ft. lbs.) torque.

(3) Tighten the flange to transfer case bolts to 27 N·m (20 ft. lbs.) torque.

(4) Lower the vehicle.

REAR—XJ,YJ VEHICLES

REMOVAL

(1) Shift the transmission and transfer case (if applicable) to their Neutral positions. Raise the vehicle.

(2) Scribe alignment marks at the pinion shaft and at each end of the propeller shaft. These marks will be used for installation reference.

(3) Remove the U-joint strap bolts at the pinion shaft yoke.

(4) Slide the slip yoke off of the transmission/transfer case output shaft and remove the propeller shaft (Fig. 3).

INSTALLATION

(1) Slide the slip yoke on the transmission/transfer case output shaft. Align the installation reference marks at the axle yoke and install the propeller shaft (Fig. 3).

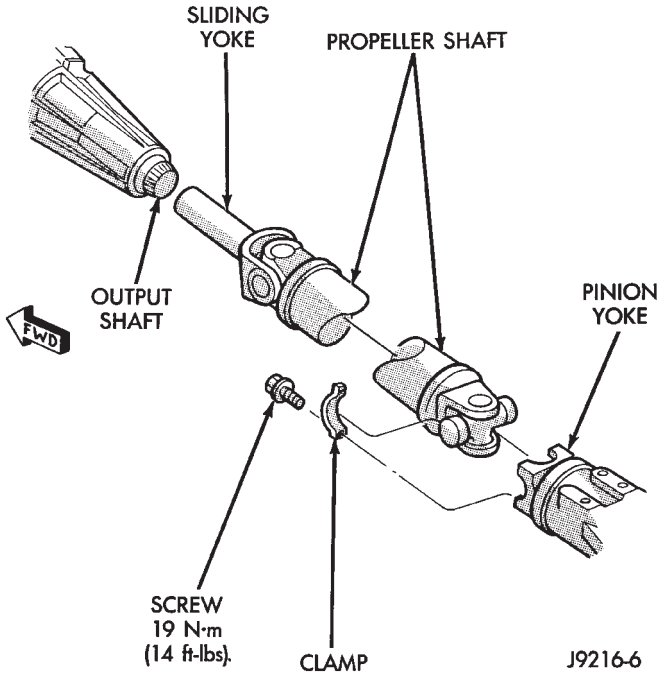

Fig. 3 Rear Propeller Shaft

Replacement U-joint straps and bolts must be installed.

(2) Tighten the U-joint strap/clamp bolts at the axle yoke to 19 N·m (14 ft. lbs.) torque.

(3) Lower the vehicle.

FRONT—YJ VEHICLES

REMOVAL

(1) Raise the vehicle.

(2) Scribe alignment marks on the yokes at the transfer case. Place marks at the pinion shaft and at each end of the propeller shaft. These marks will be used for installation reference (Fig. 4).

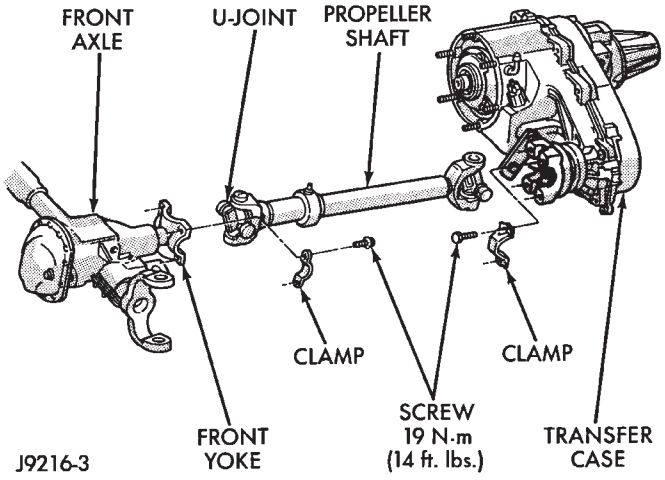

Fig. 4 YJ Front Propeller Shaft

(3) Remove the U-joint strap bolts at the pinion shaft yoke.

(4) Disconnect the propeller shaft at the transfer case and remove the propeller shaft.

INSTALLATION

(1) Position the propeller shaft with the reference marks aligned (Fig. 4). Install the propeller shaft.

Replacement U-joint straps and bolts must be installed.

(2) Tighten the U-joint strap/clamp bolts at the axle yoke to 19 N·m (14 ft. lbs.) torque.

(3) Tighten the U-joint strap/clamp to transfer case bolts to 27 N·m (20 ft. lbs.) torque.

(4) Tighten the U-joint strap bolts to 19 N·m (14 ft. lbs.) torque.

(5) Lower the vehicle.

UNIVERSAL JOINT REPLACEMENT

PRECAUTIONS

It is very important to put reference marks on the yokes before removal or component service (Fig. 1). This will assure correct phasing and eliminate possible vibration.

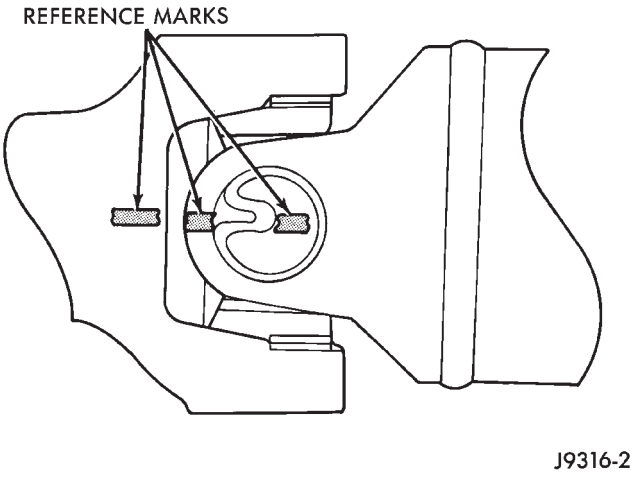

Fig. 1 Reference Marks on Yokes

SINGLE CARDAN

REMOVAL/DISASSEMBLY

Single cardan universal joints are not serviceable. If worn or leaking, they must be replaced as a unit.

(1) Remove the propeller shaft. Refer to Propeller Shaft Replacement in this Group.

(2) **Paint or score alignment marks on the yokes and propeller shaft for installation reference.**

(3) Using a soft drift, tap the outside of the bearing assembly to loosen snap ring.

(4) Remove snap rings from both sides of yoke (Fig. 2).

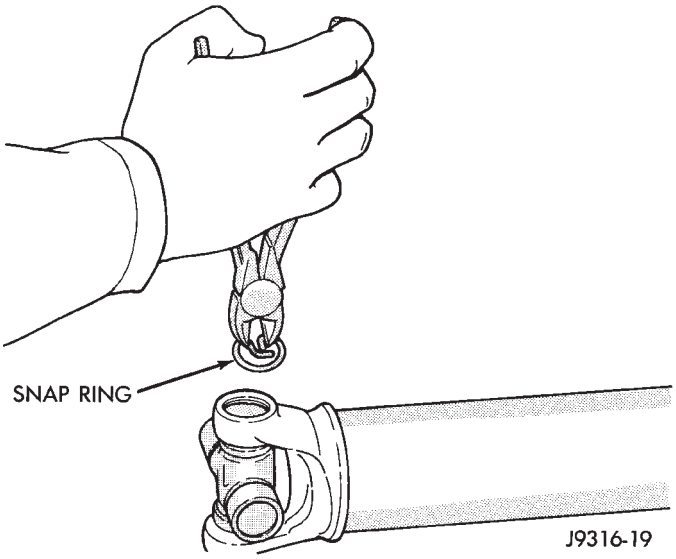

Fig. 2 Remove Snap Ring

(5) Set the yoke in an arbor press or vise with a large socket beneath it. Position the yoke with the lube fitting pointing up (if equipped). Place a smaller socket on the upper bearing assembly and press it through to release the lower bearing assembly (Fig. 3).

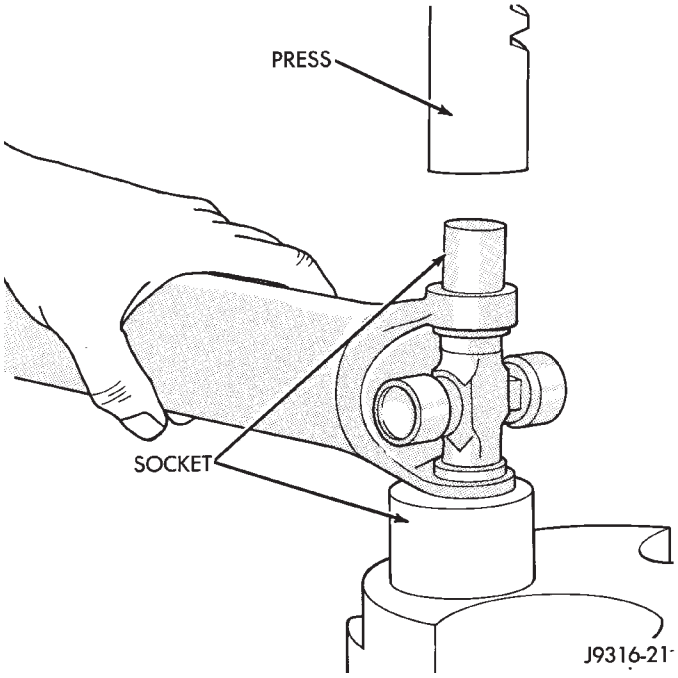

Fig. 3 Press Out Bearing

(6) If the bearing assembly will not pull out by hand after pressing, tap the base of the lug near it to dislodge.

(7) To remove the opposite bearing, turn the yoke over and straighten the cross in the open hole. Then carefully press the end of the cross until the remaining bearing can be removed (Fig. 4).

CAUTION: If the cross or bearing assembly are cocked when being pressed, the bearing assembly will score the walls of the yoke bore and ruin the yoke.

CLEANING AND INSPECTION

(1) Clean all the universal joint yoke bores with cleaning solvent and a wire brush.

(2) Inspect the yokes for distortion, cracks and worn bearing assembly bores.

ASSEMBLY/INSTALLATION

(1) Apply extreme pressure (EP) N.L.G.I. Grade 1 or 2 grease to aid in installation.

(2) Position the cross in the yoke with its lube fitting (if equipped) pointing up (Fig. 5).

(3) Place a bearing assembly over the trunnion and align it with the cross hole (Fig. 6). Keep the needle

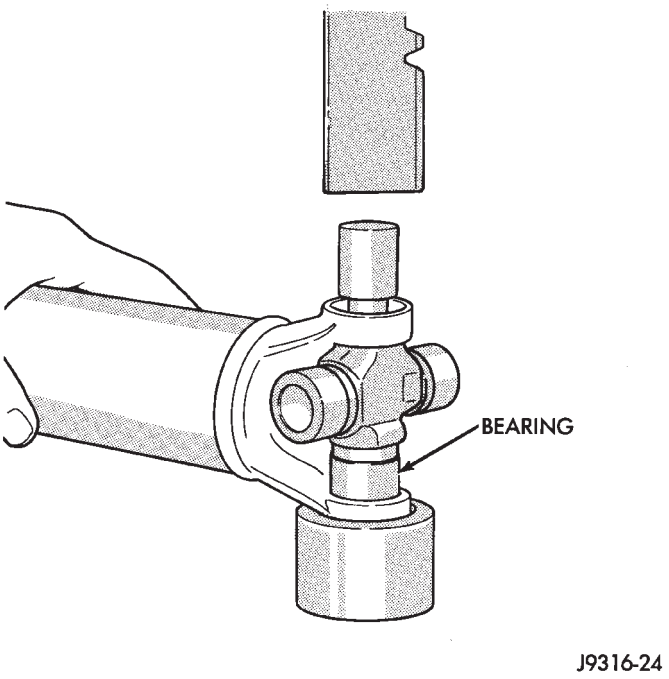

Fig. 4 Press Out Remaining Bearing

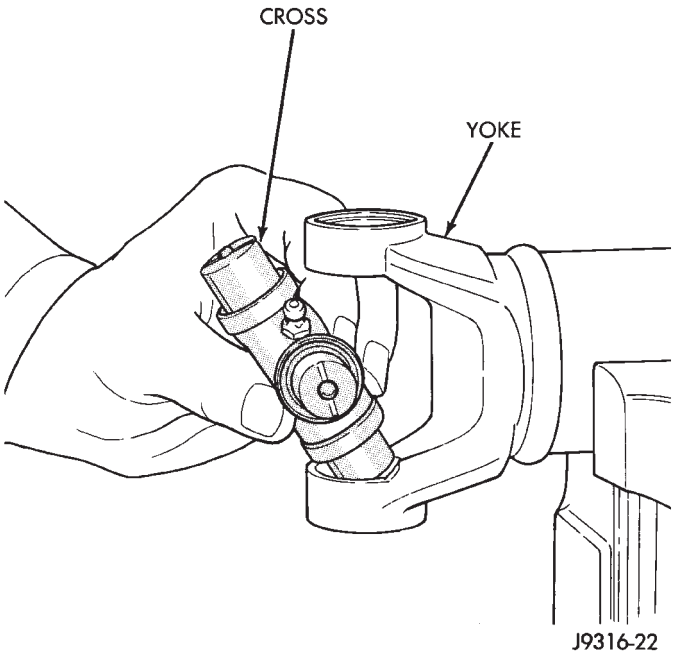

Fig. 5 Install Cross In Yoke

bearings upright in the bearing assembly. A needle roller lying at the bottom will prevent proper assembly.

(4) Press the bearing assembly into the cross hole enough to install a snap ring. Install a snap ring.

(5) Repeat steps 3 and 4 to install the opposite bearing assembly. If the joint is stiff, strike the yoke with a soft hammer to seat the needle bearings. Install a snap ring.

(6) Add grease to lube fitting (if equipped).

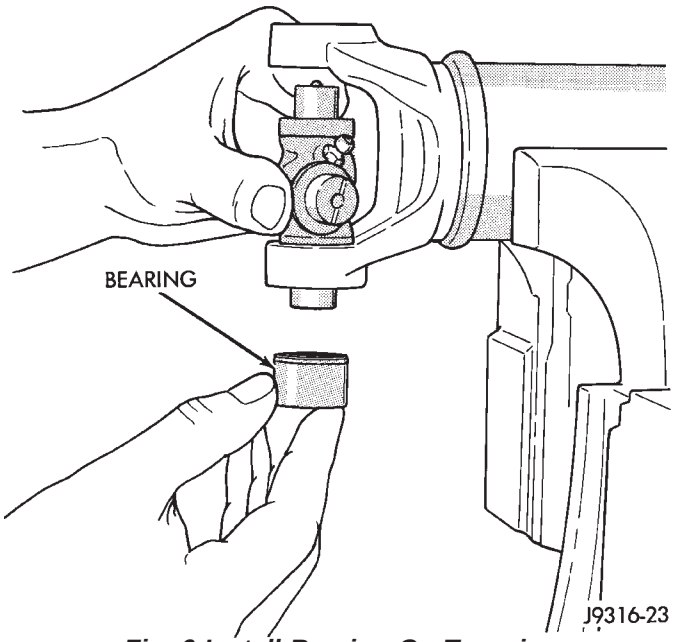

Fig. 6 Install Bearing On Trunnion

(7) Install the propeller shaft. Refer to Propeller Shaft Replacement in this Group.

DOUBLE CARDAN (CV)

REMOVAL/DISASSEMBLY

Cardan universal joints are not serviceable. If worn or leaking, they must be replaced as a unit.

(1) Remove the propeller shaft. Refer to Propeller Shaft Replacement in this Group.

(2) **Paint or score alignment marks on the yokes and propeller shaft for installation reference.**

(3) Remove all the bearing assembly snap rings (Fig. 7).

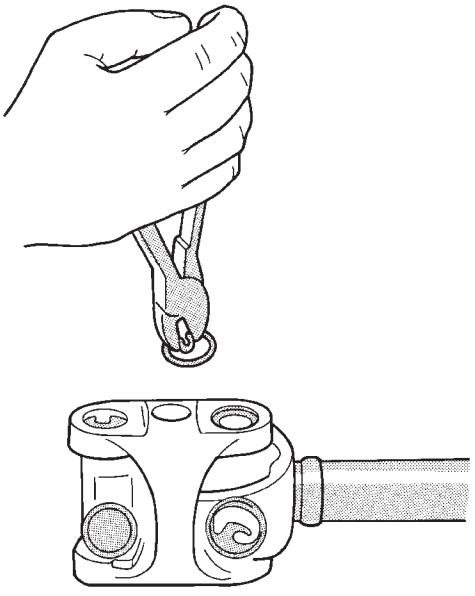

Fig. 7 Remove Snap Rings

(4) Press the bearing assembly partially from the outboard side of the center yoke, enough to grasp by vise jaws (Fig. 8). Be sure to remove any lube fittings that may interfere with removal.

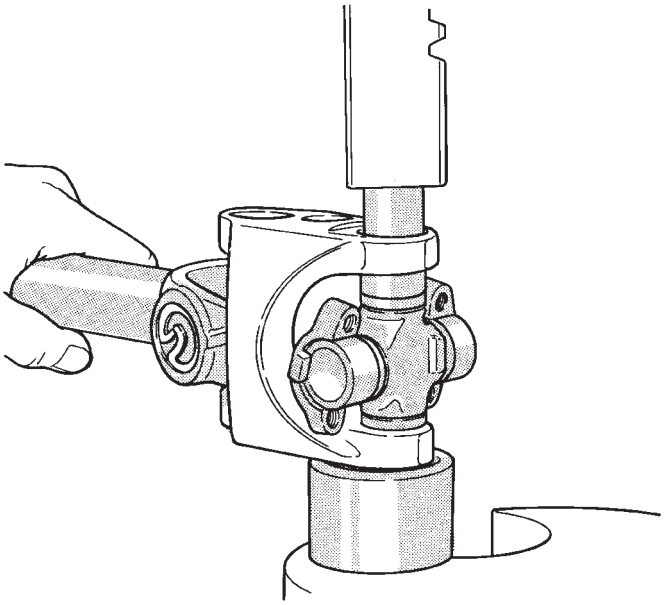

Fig. 8 Press Out Bearing

(5) Grasp the protruding bearing by vise jaws. Tap the tube yoke with a mallet and drift to dislodge from the yoke (Fig. 9).

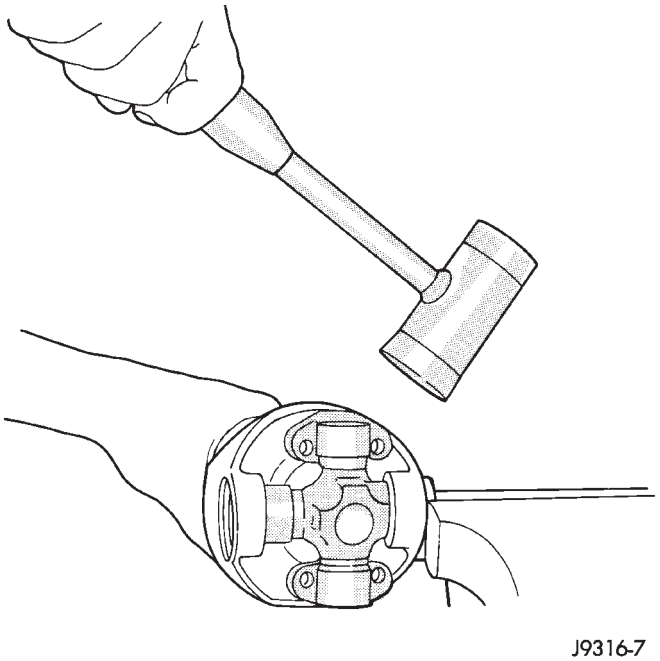

Fig. 9 Remove Bearing From Yoke

(6) Flip assembly and repeat steps 4 and 5 for removing the opposite side bearing. This will then allow removal of the cross centering kit assembly and spring (Fig. 10).

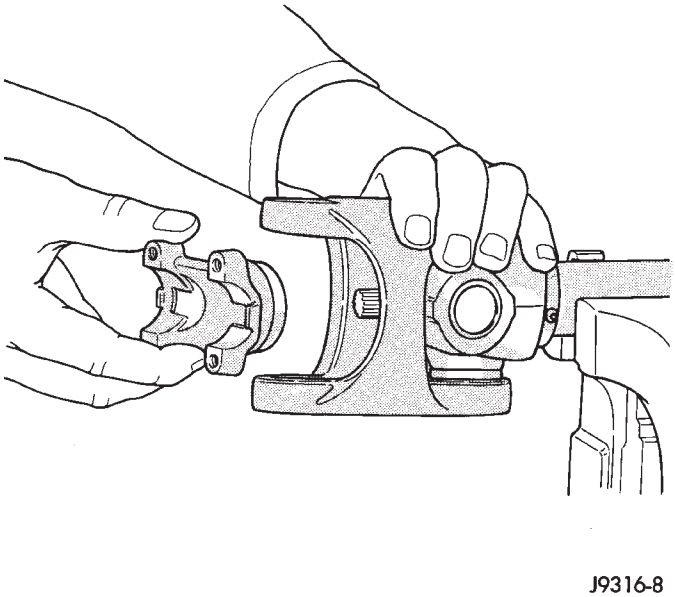

Fig. 10 Remove Centering Kit

(7) Press the remaining bearing assemblies out the other cross as described above to complete the disassembly.

CLEANING AND INSPECTION

(1) Clean all the U-joint yoke bores with cleaning solvent and a wire brush.

(2) Inspect the yokes for distortion, cracks and worn bearing assembly bores.

ASSEMBLY/INSTALLATION

During installation, ensure that the spiders and yokes are aligned to the reference marks.

(1) Fit a cross into the tube yoke (Fig. 11).

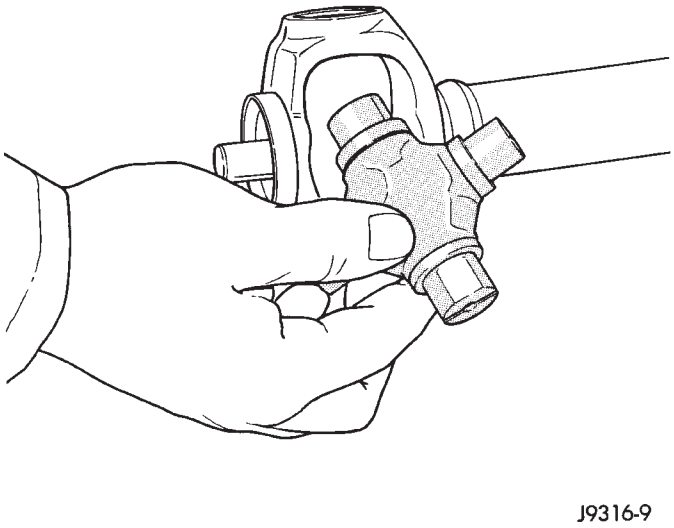

Fig. 11 Install Cross In Yoke

(2) Place a bearing assembly in a tube yoke hole and over a trunnion. Keep the needle bearings upright in the bearing assembly (Fig. 12). A needle roller lying at the bottom will prevent proper assembly. Be sure to remove any lube fittings that may interfere with removal.

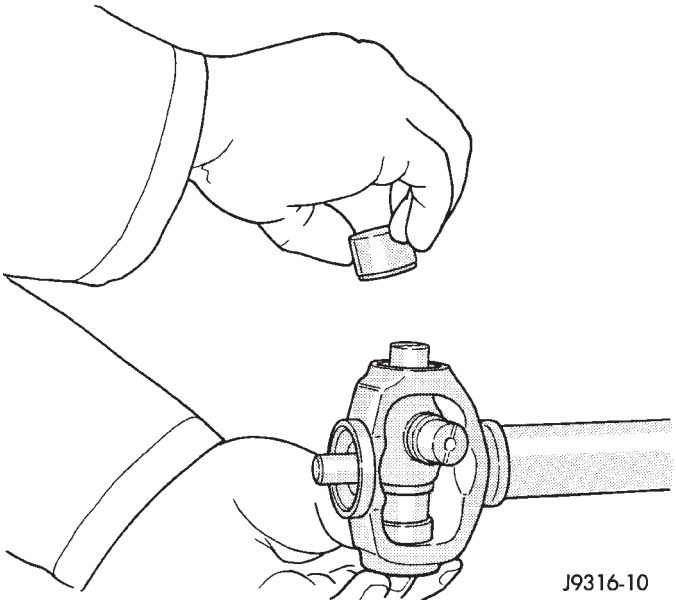

Fig. 12 Install Bearing Assembly

(3) Press the bearing assembly in place and install a snap ring (Fig. 13).

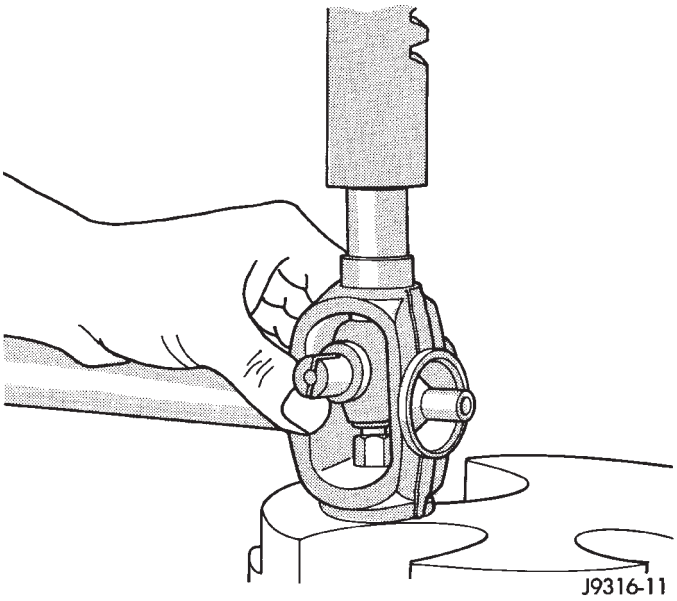

Fig. 13 Press In Bearing Assembly

(4) Flip the tube yoke and bearing assembly installation on the opposite trunnion. Install a snap ring (Fig. 14).

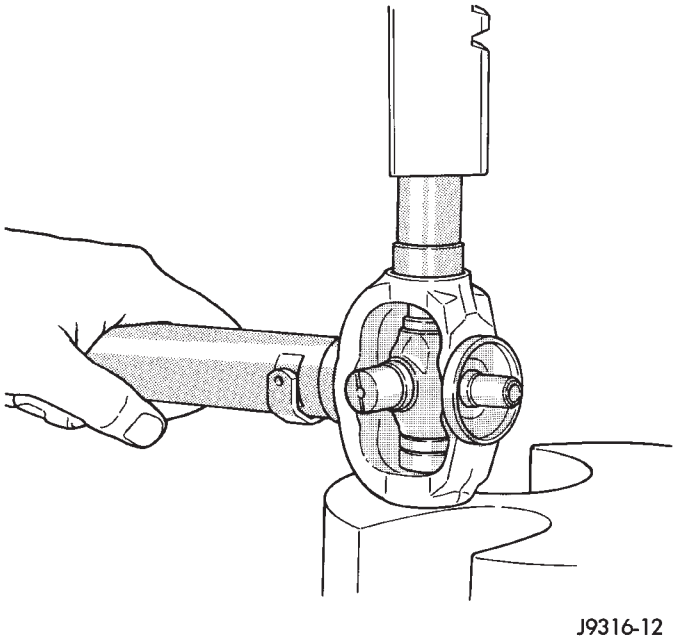

Fig. 14 Press In Bearing Assembly

(5) Fit the center yoke on the remaining two trunnions and press bearing assemblies in place, both sides (Fig. 15). Install a snap ring.

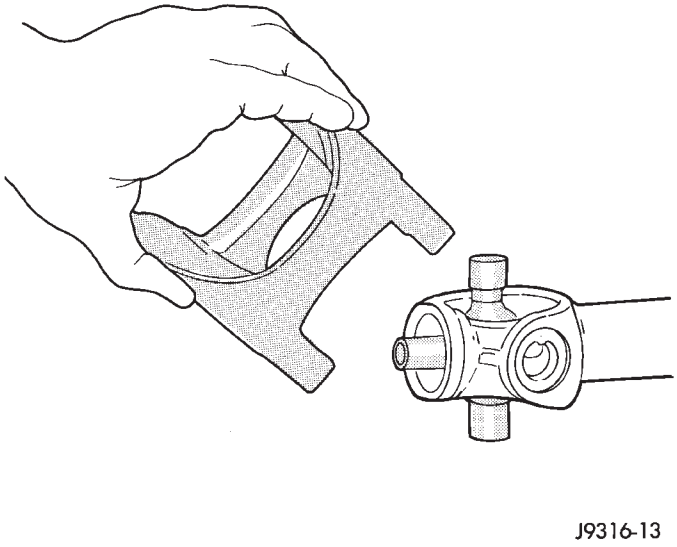

Fig. 15 Install Center Yoke

(6) Install the centering kit assembly inside the center yoke making sure the spring is in place (Fig. 16).

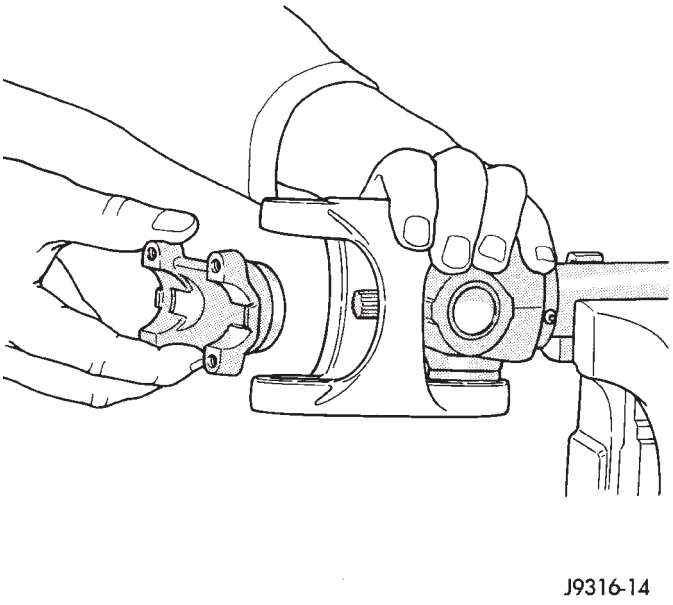

Fig. 16 Install Centering Kit

(7) Place two bearing assemblies on the remaining cross (opposite sides). Fit the open trunnions into the center yoke holes and the bearing assemblies into the centering kit (Fig. 17).

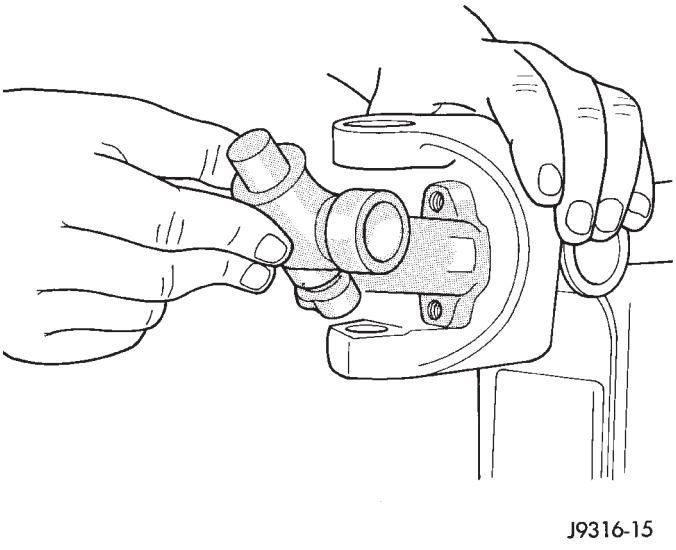

Fig. 17 Install Remaining Cross

(8) Press the remaining two bearing assemblies into place and install snap rings (Fig. 18).

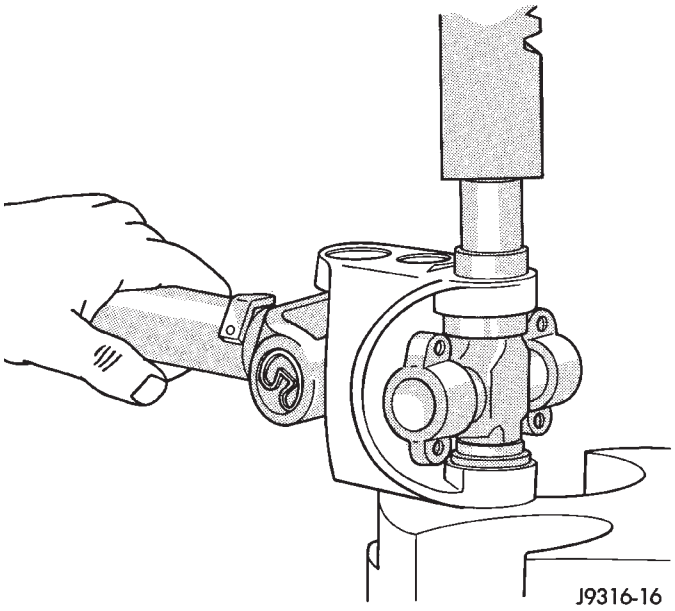

Fig. 18 Press In Bearing Assembly

(9) Tap the snap rings to allow them to seat into the grooves (Fig. 19).

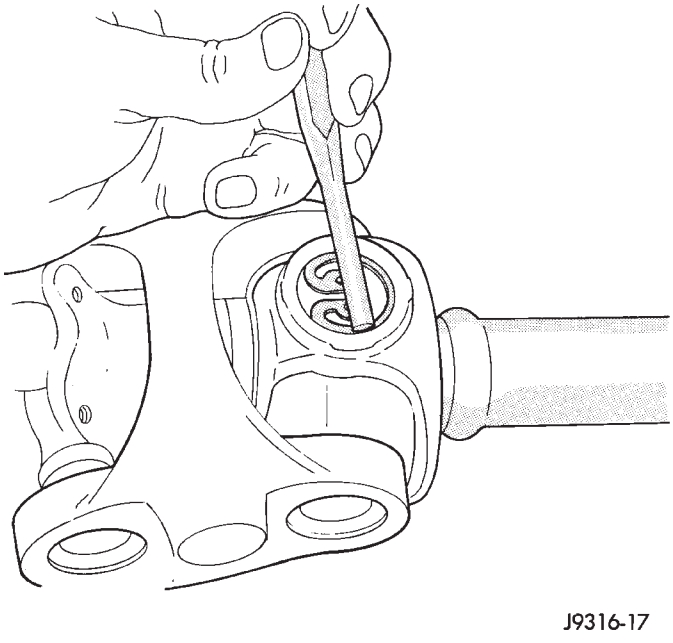

Fig. 19 Seat Snap Rings In Groove

(10) Check for proper assembly. Flex the CV joint beyond center, it should snap over-center in both directions when correctly assembled (Fig. 20).

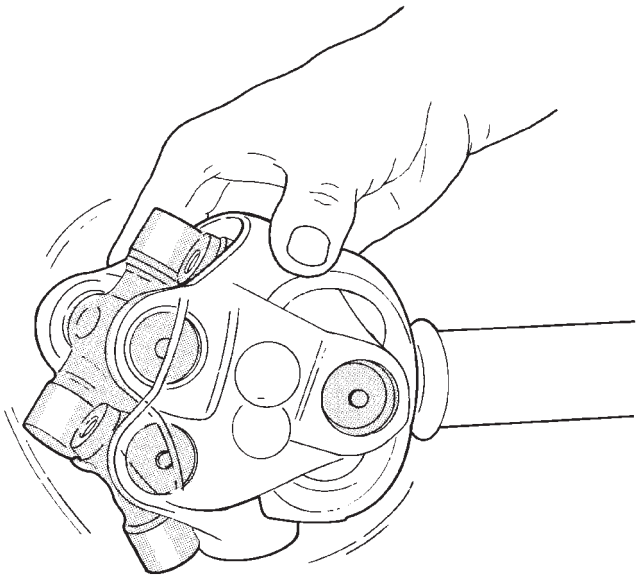

Fig. 20 Check Assembly

(11) Install the propeller shaft. Refer to Propeller Shaft Replacement in this Group.

TORQUE SPECIFICATIONS

PROPELLER SHAFTS AND U-JOINTS

DESCRIPTION	TORQUE
Front Shaft	
Transfer Case Yoke Bolts	27 N·m (20 ft. lbs.)
Axle Yoke Bolts	19 N·m (14 ft. lbs.)
Rear Shaft	
Axle Yoke Bolts	19 N·m (14 ft. lbs.)

STEERING

CONTENTS

	page		page
GENERAL INFORMATION	1	STEERING COLUMN GENERAL SERVICE—XJ	47
GENERAL INFORMATION	48	STEERING COLUMN—YJ	58
MANUAL STEERING GEAR	37	STEERING LINKAGE—XJ	16
POWER STEERING PUMP	11	STEERING LINKAGE—YJ	19
POWER STEERING SYSTEM DIAGNOSIS	3	STEERING RHD	74
RECIRCULATING BALL POWER STEERING GEAR	21	TORQUE SPECIFICATIONS	78

GENERAL INFORMATION

STEERING SYSTEM COMPONENTS

Jeep vehicles can have either a manual or power steering system (Fig. 1). A recirculating-ball type steering gear is used for both systems.

Power steering systems use;

- Steering gear
- Pressure and return fluid hoses and fittings
- Belt driven steering pump
- Integral or remote body mounted pump reservoir

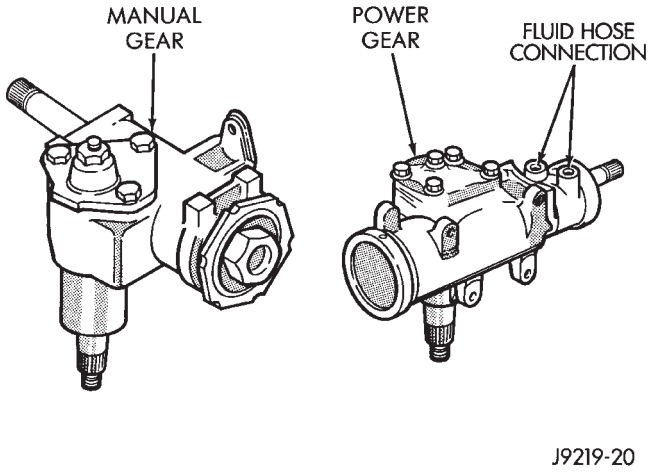

Fig. 1 Steering Gears

POWER STEERING GEAR

The steering gear is mounted on the left frame rail. The gear is joined to the intermediate shaft by a universal joint coupling. The coupling helps isolate noise and road shock from the interior.

The major internal components of the gear are the:

- Rotary valve assembly
- Steering worm shaft
- Rack piston assembly
- Pitman shaft

The movement of these parts, while turning or parking, is aided by hydraulic pressure and flow supplied by the pump. Manual steering is always available at times when the engine is not running or in the event of pump or belt failure. Steering effort is higher under such conditions.

The steering stub shaft, rotary valve, worm shaft, and rack piston assembly are all in line. The oil passages are internal within the gear housing except for pressure and return hoses between the gear and pump.

The power steering gear has a recirculating ball system. This acts as a rolling thread between the worm shaft and rack piston. The worm shaft is supported by a thrust bearing at the lower end and a bearing assembly at the upper end. When the worm shaft is turned right, the rack piston moves up in gear. Turning the worm shaft left moves the rack piston down in gear. The rack piston teeth mesh with the sector, which is part of the pitman shaft. Turning the worm shaft turns the pitman shaft, which turns the wheels through the steering linkage.

The control valve in the steering gear directs the power steering fluid to either side of the rack piston. The rack piston is assisted by hydraulic pressure. If the steering system loses hydraulic pressure, the vehicle can be controlled manually, but with higher steering effort.

An identification code located on the side cover designates the gear ratio (Fig. 2).

- Code BH designates 14:1 ratio used in XJ vehicles
- Code BF designates 13-16:1 ratio used in YJ vehicles

A recirculating-ball steering gear is used with the power (assisted) steering system (Fig. 1). The power steering gear can be adjusted and internally serviced.

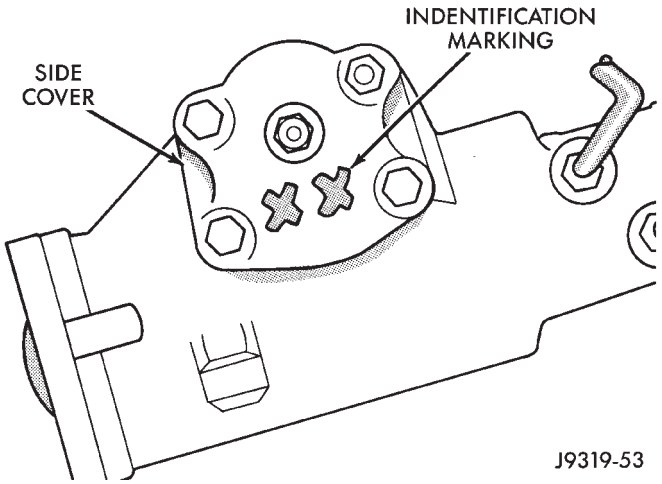

Fig. 2 Ratio Code Location

POWER STEERING PUMP

Hydraulic pressure is provided for operation of the power steering gear by a belt driven power steering pump. The power steering pump is a constant flow rate and displacement, vane-type pump. The internal parts in the housing operate submerged in fluid. The flow control orifice is part of the high pressure line fitting. The pressure relief valve inside the flow control valve limits the pump pressure.

Power steering pumps have different pressure rates and are not interchangeable with other pumps.

The power steering pump is connected to the steering gear via high pressure and return hose. The pump shaft has a pressed-on drive pulley that is belt driven by the crankshaft pulley (Fig. 3).

XJ vehicles with 2.5L engines and all YJ vehicles: The reservoir is mounted at the front left side of the engine compartment. XJ vehicles equipped with a 4.0L engine have the reservoir attached to the pump body with spring clips.

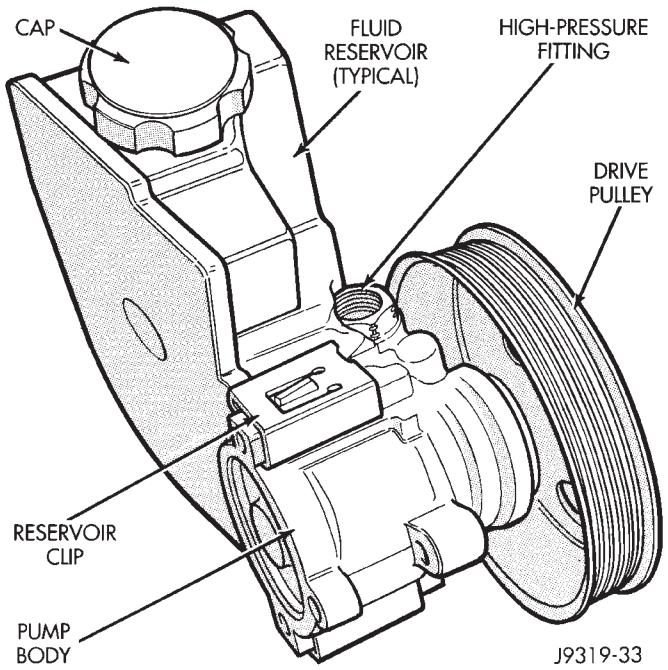

Fig. 3 TC Series Pump With Integral Reservoir

STEERING COLUMNS

Two general types of steering columns are installed on Jeep vehicles: a fixed, non-tilt column and a tilt column (Fig. 4).

The ignition key/lock cylinder is located in the steering column. When the key/lock cylinder is turned to the LOCK position, the ignition switch and steering shaft cannot be operated. For vehicles with an automatic transmission, the lock mechanism also prevents operation of the gear shift mechanism.

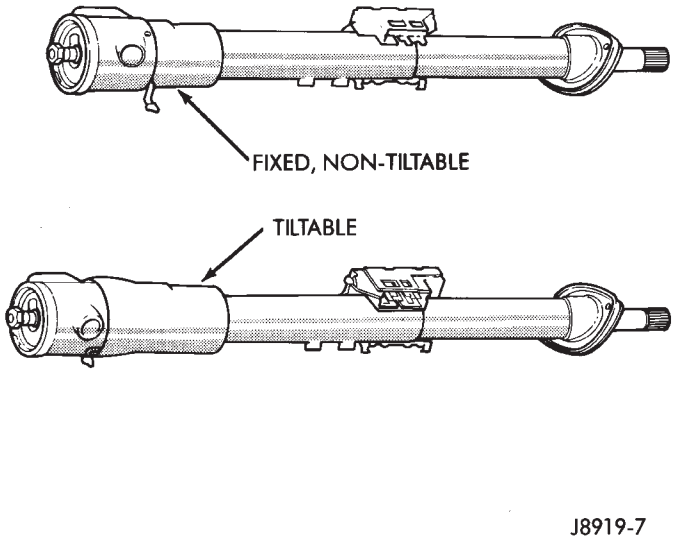

Fig. 4 Steering Columns

The center, slip-type intermediate shaft is attached to the steering gear and steering column shaft with universal joints.

Both types of steering columns have anti-theft provisions. They are energy-absorbing.

POWER STEERING SYSTEM DIAGNOSIS

PUMP PRESSURE TEST

(1) Check belt tension and adjust as necessary.

(2) Disconnect high pressure hose at gear or pump. Use a container for dripping fluid.

(3) Connect Gauge 7617 to both hoses using adapter fitting (Fig. 1). Connect spare pressure hose to gear or pump.

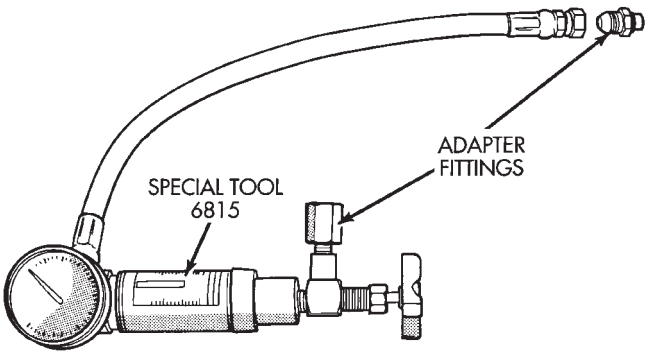

Fig. 1 Pressure Test Gauge

(4) Open the test valve completely.

(5) Start engine and let idle.

(6) Check fluid level, add fluid as necessary.

(7) Gauge should read below 862 kPa (125 psi), if above, inspect the hoses for restrictions and repair as necessary. The initial pressure should be in the range of 345-552 kPa (50-80 psi).

CAUTION: The following test procedure involves testing maximum pump pressure output and flow control valve operation. Do not leave valve closed for more than 5 seconds as the pump could be damaged.

(8) Close valve fully three times and record highest pressure indicated each time. **All three readings must be above specifications and within 345 kPa (50 psi) of each other.**

- Pressures above specifications but not within 345 kPa (50 psi) of each other, replace pump.
- Pressures within 345 kPa (50 psi) of each other but below specifications, replace pump.

CAUTION: Do not force the pump to operate against the stops for more than 2 to 4 seconds at a time. Pump damage will result.

(9) Open the test valve, turn steering wheel extreme left and right positions against the stops. Record the highest indicated pressure at each position. Compare readings to specifications. If highest output pressures are not the same against either stop, the gear is leaking internally and must be repaired.

PUMP OPERATING SPECIFICATIONS

VEHICLE	RELIEF PRESSURE (P.S.I.) ± 50
YJ	1050
XJ	1400

J9319-89

POWER STEERING SYSTEM DIAGNOSIS

STEERING NOISES

There is some noise in all power steering systems. One of the most common is a hissing sound evident at standstill parking. Hiss is a high frequency noise similar to that experienced while slowly closing a water tap. The noise is present in every valve and results from high velocity fluid passing valve orifice edges. There is no relationship between this noise and performance of the steering. Hiss may be expected when steering wheel is at end of travel or when slowly turning at standstill.

CONDITION	POSSIBLE CAUSES	CORRECTION
OBJECTIONAL HISS OR WHISTLE	1. Damaged or mispositioned steering column coupler to dash panel seal. 2. Noisy valve in power steering gear.	1. Check for proper seal between steering column coupler and dash seal. 2. Replace steering gear.
RATTLE OR CLUNK	1. Gear loose on front crossmember. 2. Crossmember-to-frame bolts or studs loose. 3. Tie rod looseness (outer or inner). 4. Loose lower control arm to crossmember bolts. 5. Loose strut to body attaching bolts. 6. Pressure hose touching other parts of body. 7. Noise internal to gear. 8. Damaged front crossmember.	1. Check gear-to-crossmember mounting bolts. Tighten to specification. 2. Torque bolts and studs to specifications. 3. Check tie rod pivot points for wear. Replace if necessary. 4. Torque control arm bolts to specifications. 5. Check upper strut mount to body attaching bolts to see if torqued to specifications. 6. Adjust hose to proper position by loosening, repositioning and tightening fitting. Do not bend tubing. 7. Replace gear. 8. Replace front crossmember.
CHIRP OR SQUEAL (IN THE AREA OF PUMP) PARTICULARLYNOTICEABLE AT FULL WHEEL TRAVEL AND DURING STANDSTILL PARKING	1. Loose belt.	1. Adjust belt tension to specification.

POWER STEERING SYSTEM DIAGNOSIS

STEERING NOISES — Continued		
There is some noise in all power steering systems. One of the most common is a hissing sound evident at standstill parking. Hiss is a high frequency noise similar to that experienced while slowly closing a water tap. The noise is present in every valve and results from high velocity fluid passing valve orifice edges. There is no relationship between this noise and performance of the steering. Hiss may be expected when steering wheel is at end of travel or when slowly turning at standstill.		
CONDITION	**POSSIBLE CAUSES**	**CORRECTION**
Pump growl results from the development of high pressure fluid flow. Normally this noise should not be high enough to be objectionable. Abnormal situations, such as a low oil level causing aeration or hoses touching the vehicle body, can create a noise level that could bring complaints.		
WHINE OR GROWL (PUMP NOISE)	1. Low fluid level. 2. Hose touching vehicle body or frame. 3. Extreme wear of pump internal parts.	1. Fill to proper level and perform leakage diagnosis. (Recheck after system is free of aeration.) 2. Reposition hose. Replace hose if tube ends are bent. 3. Replace pump and flush system.
SUCKING AIR SOUND	1. Loose return line clamp. 2. Missing O-ring on hose connection. 3. Low fluid level. 4. Air leak between reservoir and pump.	1. Tighten or replace clamp. 2. Inspect connection and replace O-ring as required. 3. Fill to proper level and perform leakage diagnosis. 4. Inspect and replace reservoir as required.
SQUEAK OR RUB SOUND	1. Sound from steering column. 2. Sound internal to steering gear.	1. Check for squeak in steering column. Inspect for contact between shroud intermediate shaft, column, and wheel. (Realign if necessary.) (a) Check for lack of grease on steering column, dash to lower coupling seal. 2. Replace gear.
SCRUBBING/KNOCKING	1. Incorrect tire size. 2. Check clearance between tires and other vehicle components, through full travel. 3. Check for interference between steering gear and other components. 4. Incorrect gear supplied.	1. Verify tire size is the same as originally supplied. 2. Correct as necessary. 3. Correct as necessary. 4. Replace gear.

POWER STEERING SYSTEM DIAGNOSIS

BINDS/STICKS/SEIZED

CONDITION	POSSIBLE CAUSES	CORRECTION
CATCHES, STICKS IN CERTAIN POSITIONS OR DIFFICULT TO TURN	1. Low fluid level.	1. Fill to proper level and perform leakage diagnosis.
	2. Tires not properly inflated.	2. Inflate tires to proper pressure.
	3. Lack of lube in ball joints.	3. Lubricate where possible.
	4. Lack of lube in outer tie rod ends.	4. Lubricate where possible.
	5. Loose pump belt.	5. Tighten or replace belt.
	6. Faulty pump flow control (Verify cause using Pump Test Procedure).	6. Replace pump.
	7. Excessive friction in steering column or intermediate shaft.	7. Correct condition. (See Steering Column Service Procedure.)
	8. Steering column coupling binding.	8. Realign as necessary.
	9. Binding upper strut bearing.	9. Correct binding condition.
	10. Excessive friction in steering gear.	10. Replace steering gear.

SHAKE/SHUDDER/VIBRATION

CONDITION	POSSIBLE CAUSES	CORRECTION
VIBRATION OF THE STEERING WHEEL AND/OR DASH DURING DRY PARK OR LOW SPEED STEERING MANEUVERS	1. Air in the power steering system.	1. Steering shudder can be expected in new vehicles and vehicles with recent steering system repairs. Shudder should improve after the vehicle has been driven several weeks.
	2. Tires not properly inflated.	2. Inflate tires to proper pressure.
	3. Excessive engine vibration.	3. Make sure that engine is running properly.
	4. Loose tie rod end.	4. Check inner and outer tie rod and jam nut for excessive free play.
	5. Overcharged air conditioning system.	5. Check air conditioning pump head pressure. (See Air Conditioning Refrigerant System Diagnosis).

POWER STEERING SYSTEM DIAGNOSIS

LOW ASSIST, NO ASSIST, OR HARD STEERING

CONDITION	POSSIBLE CAUSES	CORRECTION
STIFF, HARD TO TURN, SURGES, MOMENTARY INCREASE IN EFFORT WHEN TURNING	1. Tires not properly inflated.	1. Inflate tires to proper pressure.
	2. Low fluid level.	2. Add power steering fluid as required and perform leakage diagnosis.
	3. Loose belt.	3. Tighten or replace belt.
	4. Lack of ball joint lubrication.	4. Lubricate or replace as required.
	5. Low pressure pump (Verify using Pump Test Procedure).	5. Verify cause using Pump Test Procedure. Replace pump if necessary.
	6. High internal leak gear.	6. Check steering system using test procedure. If steering gear is at fault, replace steering gear.

POOR RETURN TO CENTER

CONDITION	POSSIBLE CAUSES	CORRECTION
STEERING WHEEL DOES NOT WANT TO RETURN TO CENTER POSITION	1. Tires not properly inflated.	1. Inflate tires to proper pressure.
	2. Improper front wheel alignment.	2. Check and adjust as necessary.
	3. Lack of lubrication in ball joint.	3. Replace as required or lubricate.
	4. Steering column U-joints misaligned.	4. Realign steering column U-joints.
	5. Mispositioned dash cover.	5. Reposition dash cover.
		To evaluate items 6 and 7, disconnect the intermediate steering shaft. Turn the steering wheel and listen for internal rubbing in column.
	6. Steering wheel rubbing.	6. Adjust covers.
	7. Damaged, mis-positioned or un-lubricated steering column coupler to dash seal.	7. Correct condition.
	8. Binding upper strut bearing.	8. Repair binding condition.
	9. Tight steering shaft bearing.	9. Replace steering column.
	10. Excessive friction in steering coupler.	10. Replace steering coupler.
	11. High friction in steering gear.	11. Replace steering gear.

POWER STEERING SYSTEM DIAGNOSIS

LOOSE STEERING

CONDITION	POSSIBLE CAUSES	CORRECTION
EXCESSIVE WHEEL KICKBACK OR TOO MUCH STEERING WHEEL PLAY	1. Air in system.	1. Add fluid.
	2. Gear loose on crossmember.	2. Check gear to crossmember mounting bolts. Tighten to specification.
	3. Free play in steering column.	3. Check and replace as required.
	4. Loose ball joints.	4. Check and replace as required.
	5. Pinch bolt loose on ball joint.	5. Check pinch bolts and tighten as required to specified torque.
	6. Front wheel bearings loose or worn.	6. Tighten hub nut or replace with new parts as necessary.
	7. Loose outer tie rod ends.	7. Check and replace as required.
	8. Loose inner tie rod ends.	8. Replace gear.
	9. Defective steering gear rotary valve.	9. Replace gear.

VEHICLE LEADS TO THE SIDE

CONDITION	POSSIBLE CAUSES	CORRECTION
WHEEL DOES NOT WANT TO RETURN TO CENTER POSITION	1. Radial tire lead.	1. Rotate tires as recommended in Tire Service.
	2. Front end misaligned.	2. Align front end as recommended in Wheel Alignment Service Procedure.
	3. Wheel braking.	3. Check for dragging brakes as directed in Brake Service Procedure.
	4. Unbalanced steering gear valve. (If this is the cause, the steering efforts will be very light in direction of lead and heavier in the opposite direction).	4. Replace steering gear.
STEERING WHEEL HAS FORE-AFT LOOSENESS	1. Steering wheel to steering column shaft nut not securely tightened.	1. Torque not to proper torque specification.
	2. Steering column lower bearing spring retainer slipped on steering column shaft.	2. Replace steering column.

POWER STEERING SYSTEM DIAGNOSIS

FLUID LEAK

CONDITION	POSSIBLE CAUSES	CORRECTION
LOW FLUID LEVEL WITH: • NO VISIBLE SIGNS OF LEAKS ON THE STEERING GEAR, PUMP, ON FLOOR, OR ANYWHERE ELSE	1. Overfilled reservoir. 2. Hose connections at pump or gear.	1. Adjust fill level. 2. Check for loose fittings and tighten to specifications. If fittings are tight, examine for damaged or missing O-ring and replace as required.
LOW FLUID LEVEL WITH: • VISIBLE LEAK ON STEERING GEAR, PUMP, FLOOR, OR ANYWHERE ELSE	3. Pump or gear leak.	3. Identify location of leak and repair or replace as indicated in Power Steering Pump and/or Gear sections of this service manual.

FOAMY OR MILKY FLUID

CONDITION	POSSIBLE CAUSES	CORRECTION
AERATION AND OVER-FLOW OF FLUID	1. Air leaks.	1. Check for air leak as described under sucking air and correct.
	2. Low fluid level.	2. Extremely cold temperatures may cause system aeration if the oil level is low. Add fluid as required.
	3. Cracked pump housing.	3. Remove pump from vehicle and separate reservoir from housing. Check expansion plug and housing for cracks. Replace pump as required.
	4. Water contamination.	4. Drain and refill fluid if there is evidence of contamination.

PUMP LEAKAGE DIAGNOSIS

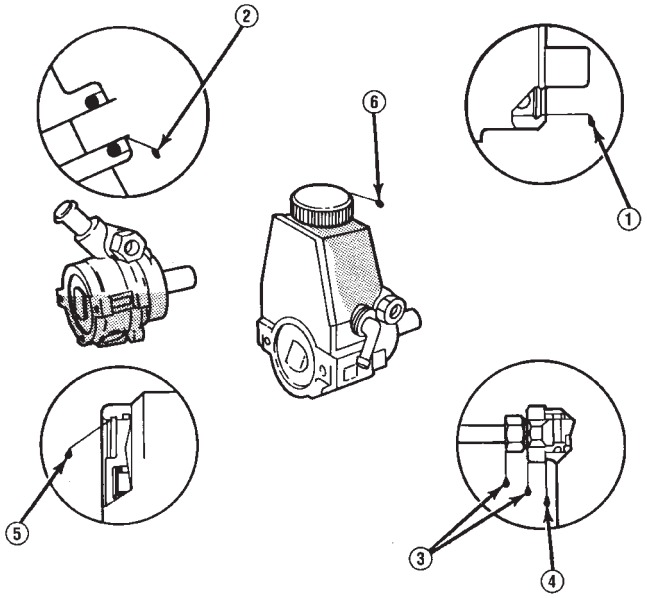

1. BUSHING (BEARING) WORN, SEAL WORN. REPLACE PUMP.
2. REPLACE RESERVOIR O-RING SEAL.
3. TORQUE HOSE FITTING NUT TO 35 N•m (25 ft. lbs.). IF LEAKAGE PERSISTS, REPLACE O-RING SEAL.
4. TORQUE FITTING TO 75 N•m (55 ft. lbs.). IF LEAKAGE PERSISTS, REPLACE O-RING SEAL.
5. REPLACE PUMP.
6. CHECK OIL LEVEL; IF LEAKAGE PERSISTS WITH THE LEVEL CORRECT AND CAP TIGHT, REPLACE THE CAP.

J9319-74

GEAR LEAKAGE DIAGNOSIS

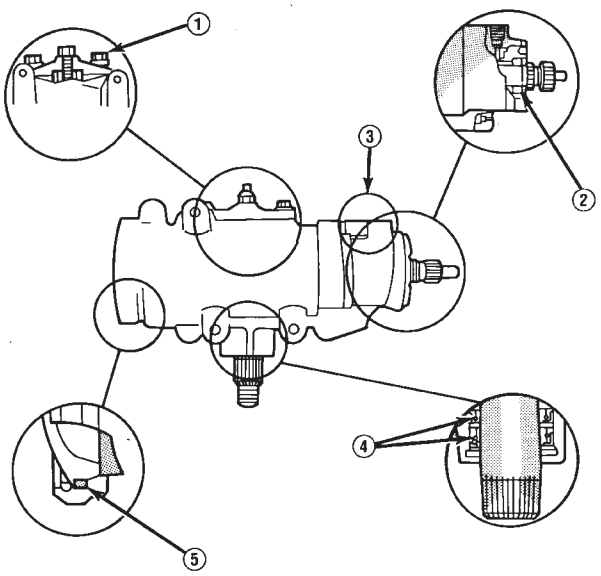

1. SIDE COVER LEAK - TORQUE SIDE COVER BOLTS TO 60 N•m (45 FT. LBS.). REPLACE THE SIDE COVER SEAL IF THE LEAKAGE PERSISTS.
2. ADJUSTER PLUG SEAL - REPLACE THE ADJUSTER PLUG SEALS.
3. PRESSURE LINE FITTING - TORQUE THE HOSE FITTING NUT TO 27 N•m (20 FT. LBS.). IF LEAKAGE PERSISTS, REPLACE THE SEAL.
4. PITMAN SHAFT SEALS - REPLACE THE SEALS.
5. TOP COVER SEAL - REPLACE THE SEAL.

J9319-75

POWER STEERING PUMP

INDEX

	page		page
Drive Pulley Replacement	13	Pump Replacement	12
Flow Control Valve Fitting O-Ring Seal	14	Reservoir Replacement	14
Power Steering Pump—Initial Operation	15	Service Information	11
Pressure and Return Hose Replacement	11		

SERVICE INFORMATION

The power steering pump internal components are not serviced or adjusted. If a malfunction or an internal fluid leak occurs, the complete unit must be replaced. A reservoir, cap, and O-ring seal kit are the only service components available.

PRESSURE AND RETURN HOSE REPLACEMENT

Cap hose open ends and pump/steering gear fittings to prevent entry of foreign material.

WARNING: POWER STEERING FLUID (AND PUMP COMPONENTS) AND THE EXHAUST SYSTEM CAN BE EXTREMELY HOT IF THE ENGINE HAS BEEN RECENTLY OPERATING. DO NOT START THE ENGINE WITH ANY LOOSE OR DISCONNECTED HOSES. DO NOT ALLOW THE HOSES TO TOUCH A HOT EXHAUST MANIFOLD OR THE CATALYTIC CONVERTER.

REMOVAL

(1) Remove fasteners from hose retaining brackets at all locations.

(2) If applicable, remove pressure sensor from pressure hose (Fig. 1, 2).

(3) Disconnect pressure and return hose from the steering gear. Drain the fluid from pump and reservoir (Fig. 1, 2, 3).

(4) Disconnect pressure and return hose from the pump. Remove hoses from vehicle (Fig. 1, 2, 3).

INSTALLATION

(1) Wipe hose ends, pump and gear unions clean.

(2) Connect hose at steering gear and pump. Route hose while avoiding extreme bends or kinks. **The hose must be kept away from exhaust system components.** Do not distort hose tube ends by bending, kinking or over tightening.

(3) If applicable, install and tighten pressure sensor to 28 N·m (252 in. lbs.) torque (Fig. 1, 2).

(4) When used, the protective foam sleeves must be properly positioned on the hose to prevent chafing.

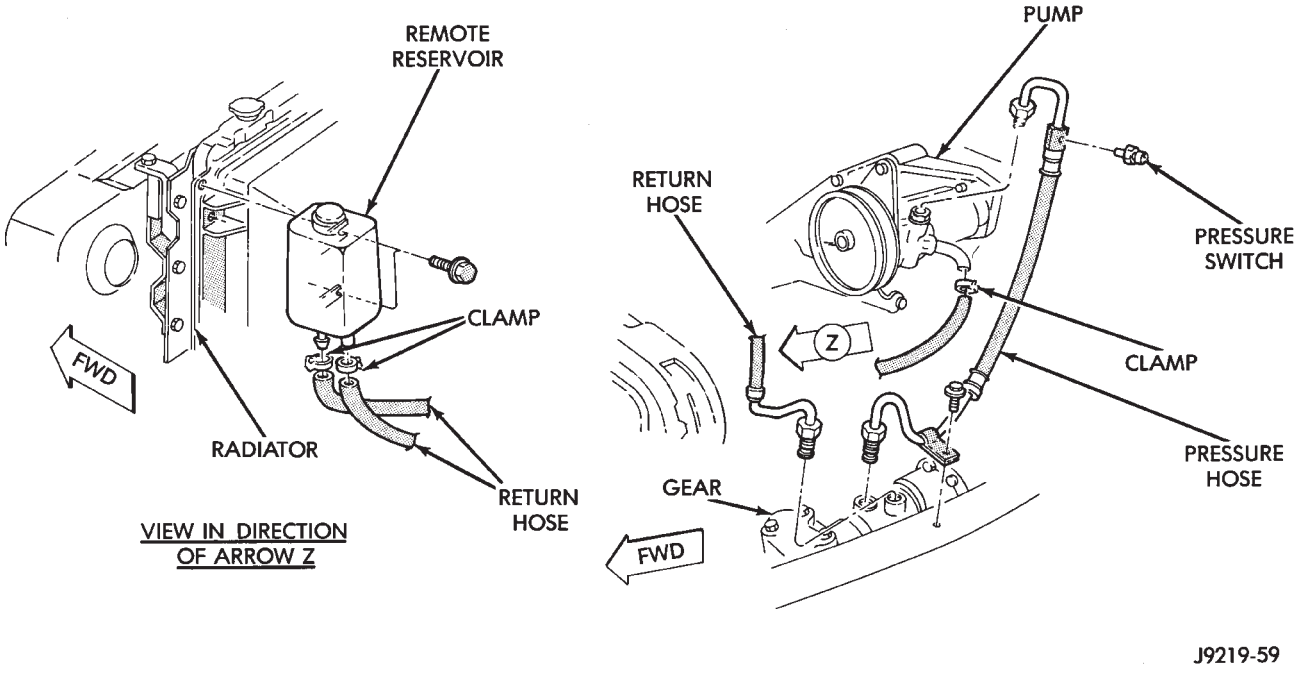

Fig. 1 Power Steering Hose—YJ

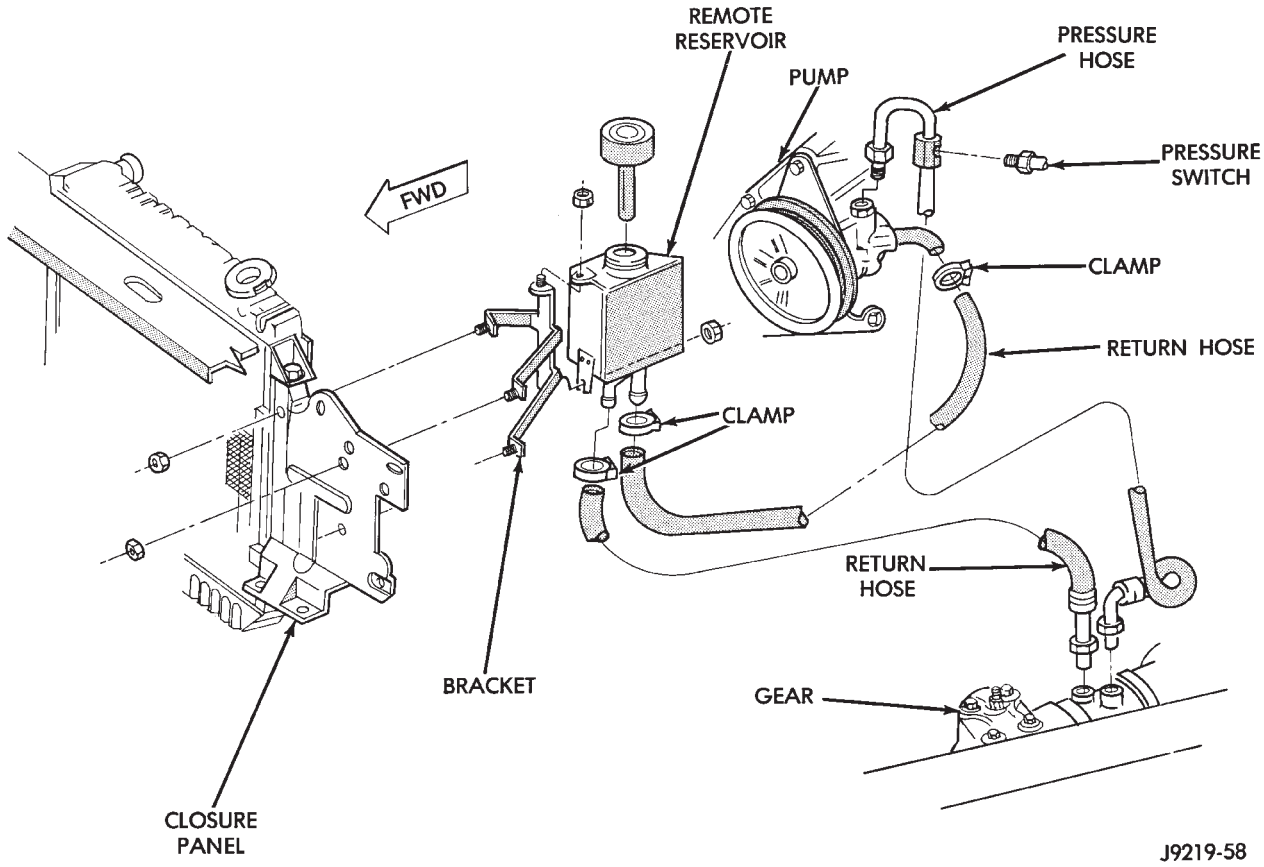

Fig. 2 Power Steering Hose—XJ 4 Cylinder

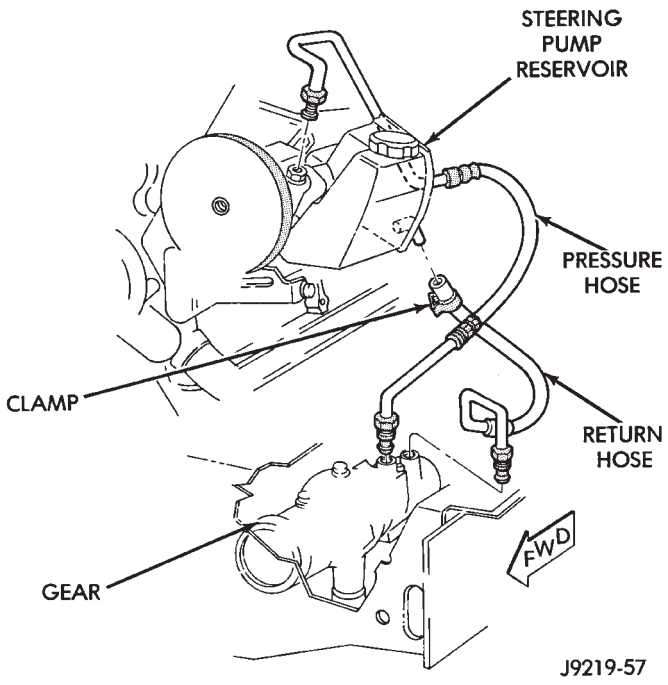

Fig. 3 Power Steering Hose—XJ 6 Cylinder

(5) Tighten fittings at pump and gear to 35 N·m (25 ft. lbs.) torque.

(6) Install clamps on return hose on gear, pump and reservoir.

(7) After installation, inspect and test for fluid leaks.

PUMP REPLACEMENT

REMOVAL

CAUTION: The drive belt tension must be released before removing the pump. If the belt is not loosened, the pump pulley could be damaged.

(1) Remove serpentine drive belt. Refer to Group 7, Cooling for additional information.

(2) Place a drain pan under pump.

(3) Remove pressure and return hoses from pump. Refer to Pressure and Return Hose Replacement in this section.

(4) Remove 2 rear bracket-to-pump bolts (Fig. 4).

(5) Remove lower nut at adjustment bracket.

(6) Remove adjuster bolt.

(7) Remove upper pivot bolt.

(8) Tilt pump forward and remove pump and front bracket assembly from engine bracket.

(9) Remove adjuster collar at lower stud on pump bracket.

(10) Remove pulley from pump. Refer to Drive Pulley Replacement in this section (Fig. 5).

(11) Remove 3 front bracket-to-pump bolts.

FASTENER TORQUE			
LETTER	N•m	IN. LBS.	FT. LBS.
A	57	—	42
B	28	250	21
C	47	—	35

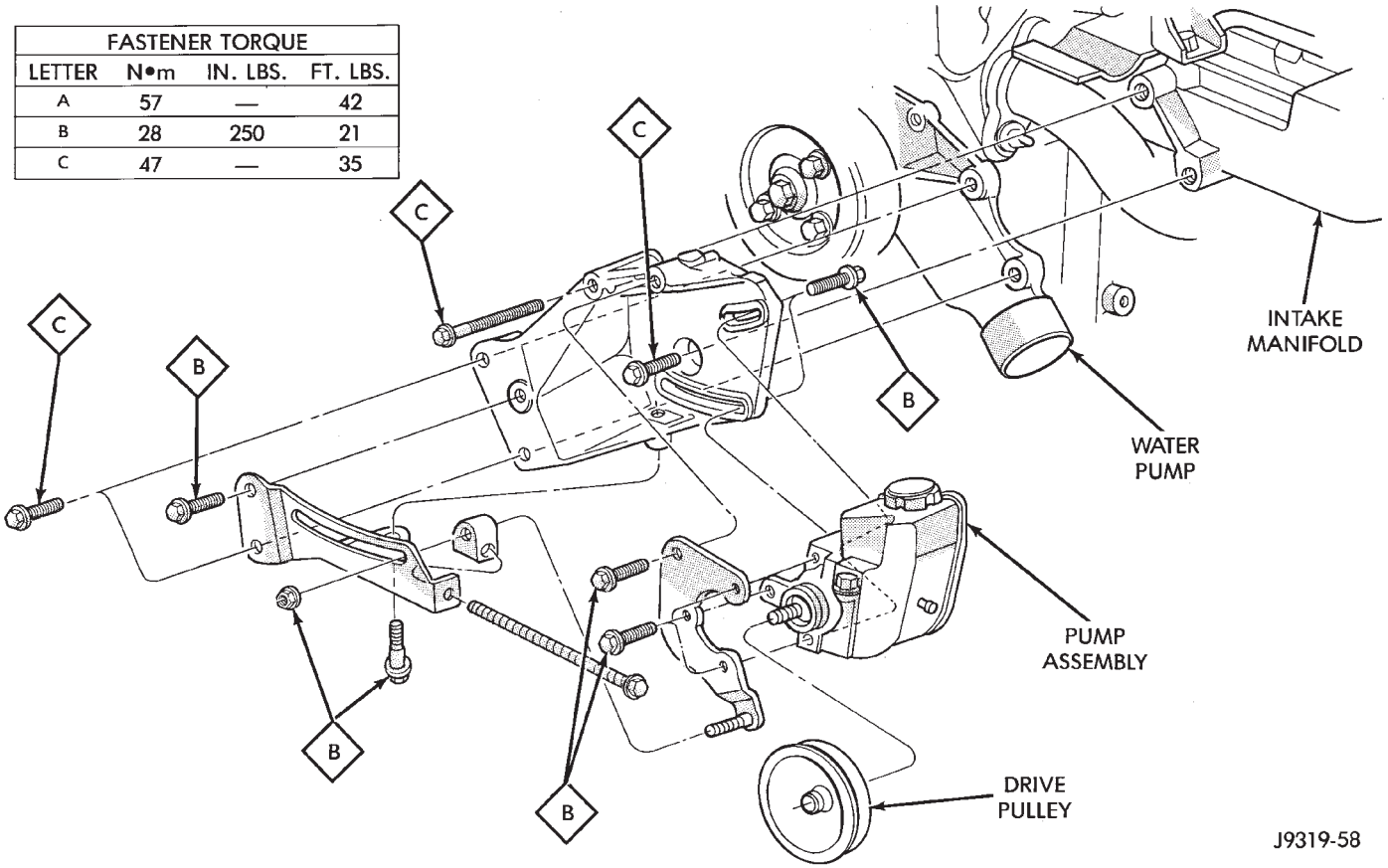

Fig. 4 Pump Mounting—6 Cylinder

INSTALLATION

(1) Install 3 front bracket-to-pump bolts. Tighten to 28 N·m (21 ft. lbs.) torque.

(2) Install pulley on pump. Refer to Drive Pulley Replacement in this section (Fig. 6).

(3) Install adjuster collar on adjuster bracket stud (Fig. 4).

(4) Tilt pump forward and install pump onto engine bracket.

(5) Install upper pivot bolt.

(6) Install lower adjuster bolt.

(7) Install lower adjuster stud nut.

(8) Install 2 rear engine bracket to pump bolts. Tighten to 28 N·m (21 ft. lbs.) torque.

(9) Install the serpentine drive belt. Refer to Group 7, Cooling for additional information.

(10) Install the pressure and return hoses to pump. Refer to Pressure and Return Hose Replacement in this section.

(11) Add power steering fluid. Refer to Power Steering Pump Initial Operation in this section.

DRIVE PULLEY REPLACEMENT

REMOVAL

(1) Remove power steering pump. Refer to Pump Replacement in this section.

(2) Remove the drive pulley with Puller C-4333 (Fig. 5).

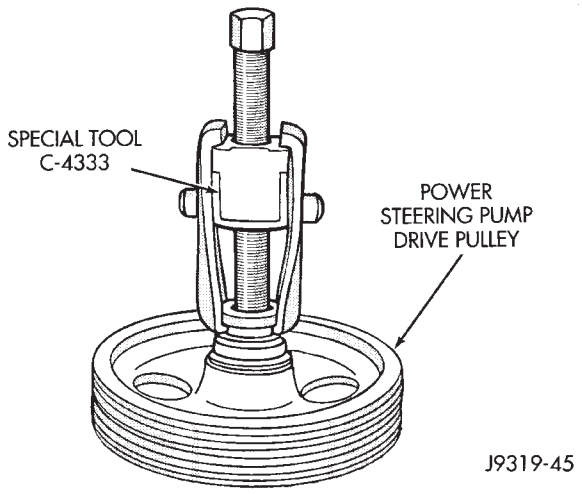

Fig. 5 Remove Drive Pulley—Typical

Do not hammer on any part of drive pulley, damage will occur to the pump and pulley.

INSTALLATION

(1) Install the pulley with Installer C-4063-B (Fig. 6). Do not use the tool adapters.

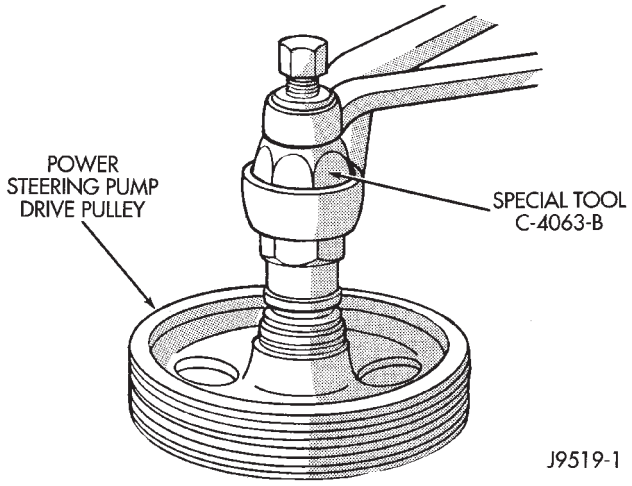

Fig. 6 Install Drive Pulley—Typical

(2) Be sure tool and pulley remain aligned and NOT cocked with the pump shaft.

(3) Press the pulley on flush with end of pump shaft (Fig. 7).

(4) Install power steering pump. Refer to Pump Replacement in this section.

With Serpentine Belts; Run engine until warm (5 min.) and note any belt chirp. If chirp exists, move pulley outward approximately 0.5 mm (0.020 in.). If noise increases, press on 1.0 mm (0.040 in.). **Be careful that pulley does not contact mounting bolts.**

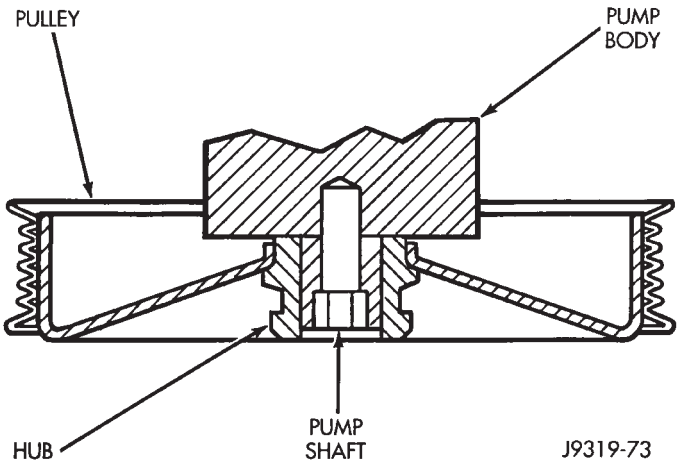

Fig. 7 Pump Shaft Location

RESERVOIR REPLACEMENT

REMOVAL

(1) Remove power steering pump. Refer to Pump Replacement in this section.

(2) Clean exterior of pump with solvent.

(3) Clamp the pump body in a soft jaw vice.

(4) Pry up tab and slide the retaining clip off (Fig. 8).

(5) Remove fluid reservoir from pump body. Remove and discard O-ring seal (Fig. 9).

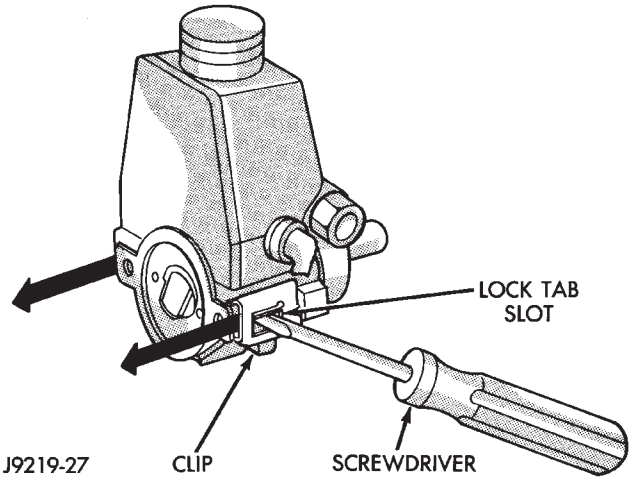

Fig. 8 Remove Reservoir Clips—Typical

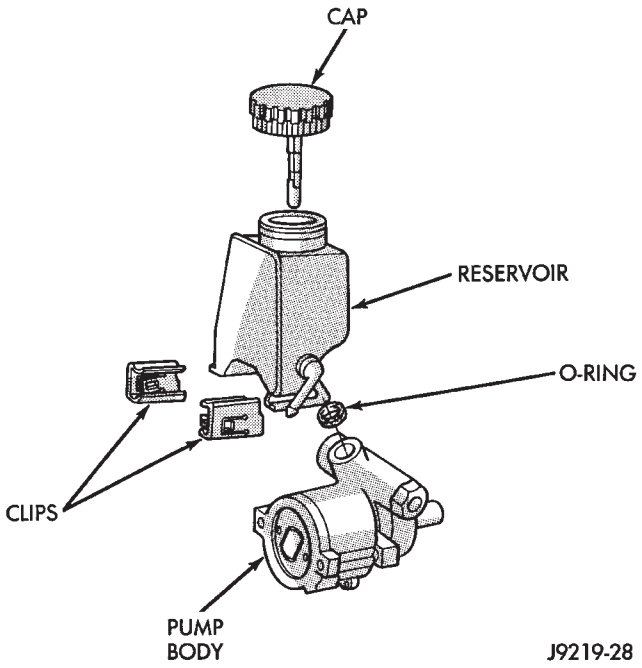

Fig. 9 Remove Reservoir—Typical

INSTALLATION

(1) Lubricate new O-ring Seal with Mopar Power Steering Fluid or equivalent.

(2) Install O-ring seal in housing.

(3) Install reservoir onto housing.

(4) Slide and tap in reservoir retainer clips until tab locks to housing.

(5) Install power steering pump. Refer to Pump Replacement in this section.

FLOW CONTROL VALVE FITTING O-RING SEAL

REMOVAL

(1) Clean area around fitting to prevent dirt from entering pump. Remove pressure hose from pump fitting.

(2) Remove fitting from pump housing (Fig. 10). **Prevent flow control valve and spring from sliding out of housing bore.**

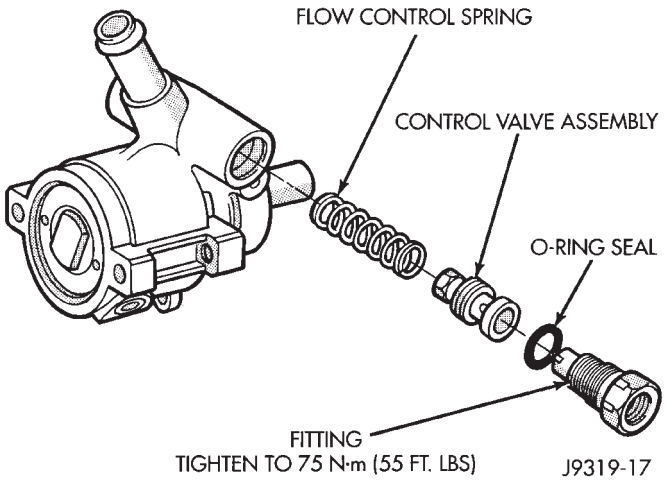

Fig. 10 Flow Control Valve Fitting

(3) Remove and discard O-ring seal.

INSTALLATION

(1) If necessary, clean and install flow control valve and spring in pump housing bore. **Be sure the hex nut end of the valve is facing in toward pump.**

(2) Install O-ring seal onto fitting (Fig. 10).

(3) Install flow control valve in pump housing and tighten to 75 N·m (55 ft. lbs.) torque.

(4) Install pressure hose to valve.

POWER STEERING PUMP—INITIAL OPERATION

CAUTION: The fluid level should be checked with engine off to prevent injury from moving components. Use only Mopar Power Steering Fluid. Do not use automatic transmission fluid. Do not overfill.

Wipe filler cap clean, then check the fluid level. The dipstick should indicate FULL COLD when the fluid is at normal temperature 21°C to 27°C (70°F to 80°F).

(1) Fill the pump fluid reservoir to the proper level and let the fluid settle for at least two (2) minutes.

(2) Start the engine and let run for a few seconds. Then turn the engine off.

(3) Add fluid if necessary. Repeat the above procedure until the fluid level remains constant after running the engine.

(4) Raise the front wheels off the ground.

(5) Start the engine. Slowly turn the steering wheel right and left, lightly contacting the wheel stops.

(6) Add power steering fluid if necessary.

(7) Lower the vehicle and turn the steering wheel slowly from lock to lock.

(8) Stop the engine. Check the fluid level and refill as required.

(9) If the fluid is extremely foamy, allow the vehicle to stand a few minutes and repeat the above procedure.

STEERING LINKAGE—XJ

INDEX

	page		page
Drag Link	16	Steering Damper	17
Pitman Arm	17	Tie Rod	16
Service Information	16		

SERVICE INFORMATION

The steering linkage consists of a pitman arm, drag link, tie rod, and steering damper. Adjustment sleeves are used on the tie rod and drag link for toe and steering wheel alignment.

Refer to Group 2, Front Suspension and Axle for additional information.

The tie-rod end ball stud seals should be inspected during all oil changes.

A damaged ball stud seal requires removal of the seal. Inspect the tie-rod end ball stud at the throat opening. Check for lubricant loss, contamination, ball stud wear or corrosion. If these conditions exist, replace the tie-rod. A replacement seal can be installed if lubricant is in good condition. Otherwise, a complete replacement ball stud end should be installed. Lubricate the tie-rod end with MOPAR® Multi-Mileage Lubricant, or equivalent product.

Use a Puller tool C-3894-A for tie rod removal. Failure to use this tool could damage the ball stud and seal (Fig. 1).

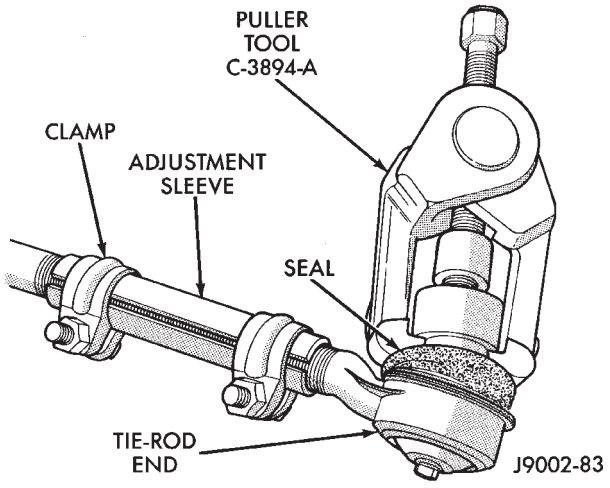

Fig. 1 Ball Stud Removal

TIE ROD

REMOVAL

(1) Remove the cotter pins and nuts at the tie rod ball studs and drag link (Fig. 2).

(2) Loosen the ball studs with a puller tool to remove the tie rod.

(3) If necessary, loosen the end clamp bolts and remove the tie rod ends from the tube.

INSTALLATION

(1) If necessary, install the tie rod ends in the tube (Fig. 2). Position the tie rod clamp as shown (Fig. 3) and tighten to 27 N·m (20 ft. lbs.) torque.

(2) Install the tie rod on the drag link and steering knuckle. Install the retaining nuts.

(3) Tighten the ball stud nut on the steering knuckle to 47 N·m (35 ft. lbs.) torque. Tighten the ball stud nut to drag link to 75 N·m (55 ft. lbs.) torque. Install new cotter pins.

DRAG LINK

REMOVAL

The drag link ball stud cannot be disassembled for service.

(1) Remove the steering damper ball stud from the drag link with a puller tool.

(2) Remove the drag link from the steering knuckle with a puller tool. Remove the same for tie rod and pitman arm.

(3) If necessary, loosen the end clamp bolts and remove the tie rod end from the link.

INSTALLATION

(1) Install the drag link adjustment sleeve and tie rod end. Position clamp bolts as shown (Fig. 3).

(2) Position the drag link at the steering linkage (Fig. 2).

Install the nut that attach the drag link to the steering knuckle. Do the same for the tie rod and pitman arm.

(3) Tighten the nut at the steering knuckle to 47 N·m (35 ft. lbs.) torque. Tighten the pitman and tie rod ball stud nuts to 75 N·m (55 ft. lbs.) torque. Install new cotter pins.

(4) Install the steering damper onto the drag link. Tighten the nut to 47 N·m (35 ft. lbs.) torque. Install a new cotter pin.

FASTENER TORQUE			
LETTER	N•m	IN. LBS.	FT. LBS.
A	251	—	185
B			
C	74	—	55
D			
E	49	—	36
F	27	—	20

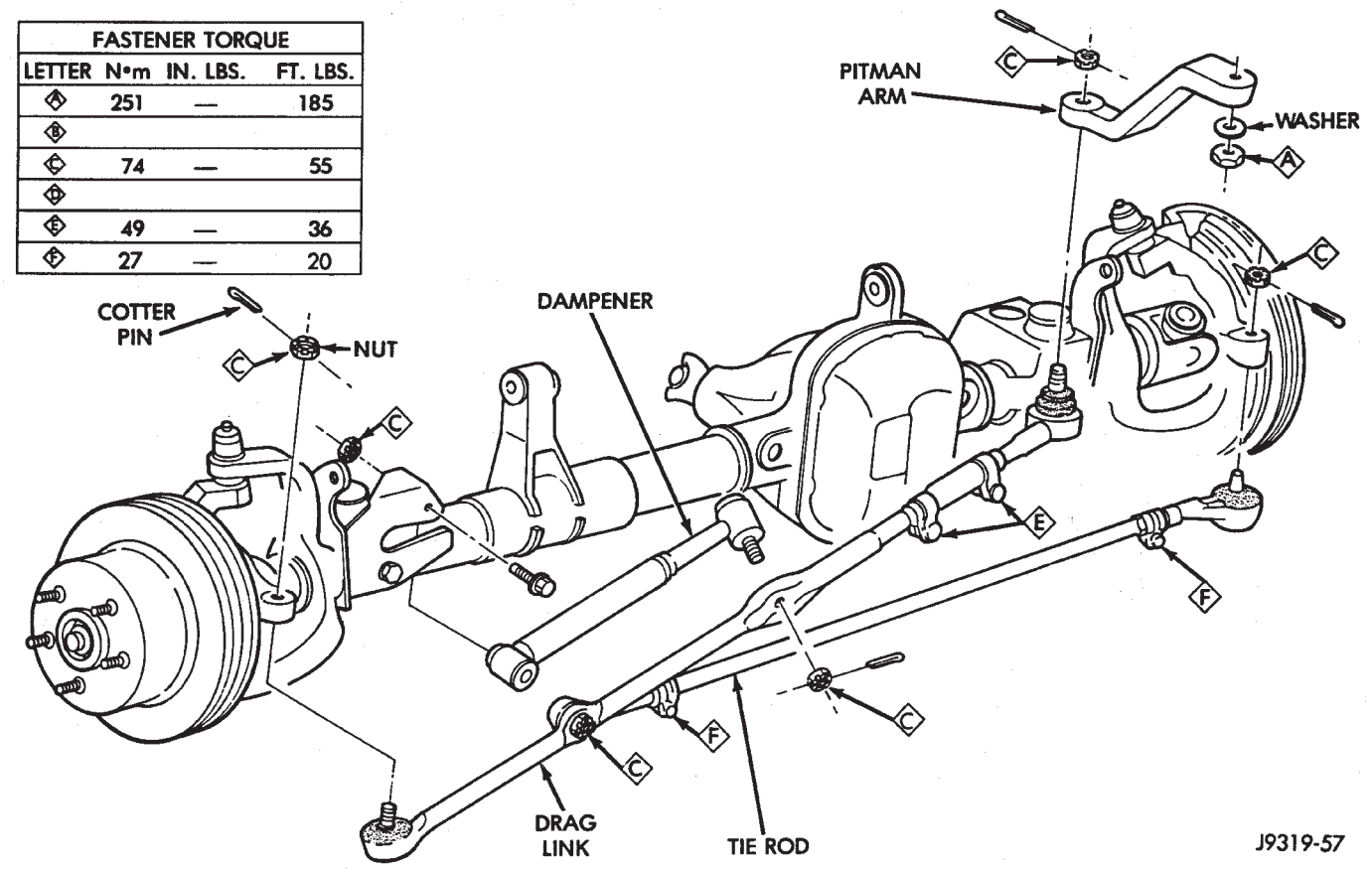

Fig. 2 Steering Linkage

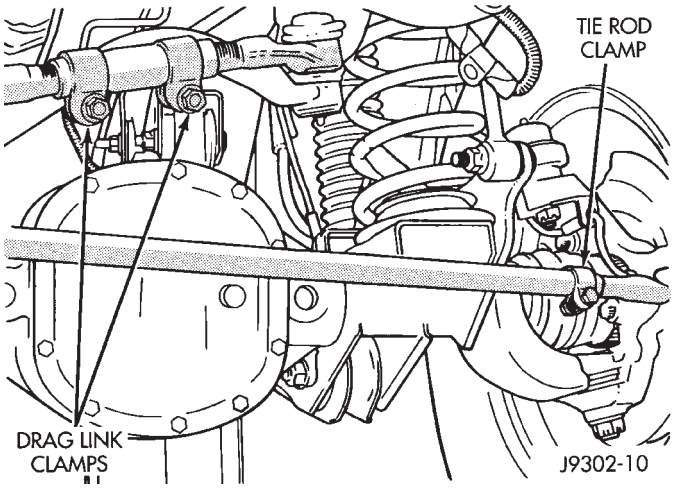

Fig. 3 Tie Rod/Drag Link Clamp Bolt

STEERING DAMPER

REMOVAL

(1) Place the front wheels in a straight-ahead position.

(2) Remove the steering damper retaining nut and bolt from the axle bracket (Fig. 2).

(3) Remove the cotter pin and nut from the ball stud at the drag link (Fig. 2).

(4) Remove the steering damper ball stud from the drag link with a puller tool.

INSTALLATION

(1) Install the steering damper to the axle bracket and drag link.

(2) Install the steering damper bolt in the axle bracket. Tighten the nut to 75 N·m (55 ft. lbs.) torque.

(3) Install the ball stud nut at the drag link. Tighten the nut to 75 N·m (55 ft. lbs.) torque. Install a new cotter pin.

PITMAN ARM

REMOVAL

(1) Remove the cotter pin and nut from the drag link at the pitman arm.

(2) Remove the drag link ball stud from the pitman arm with a puller.

(3) Remove the nut and washer from the steering gear shaft. Mark the pitman shaft and pitman arm for installation reference. Remove the pitman arm from steering gear with Puller C-4150-A (Fig. 4).

INSTALLATION

(1) Align and install the pitman arm on steering gear shaft.

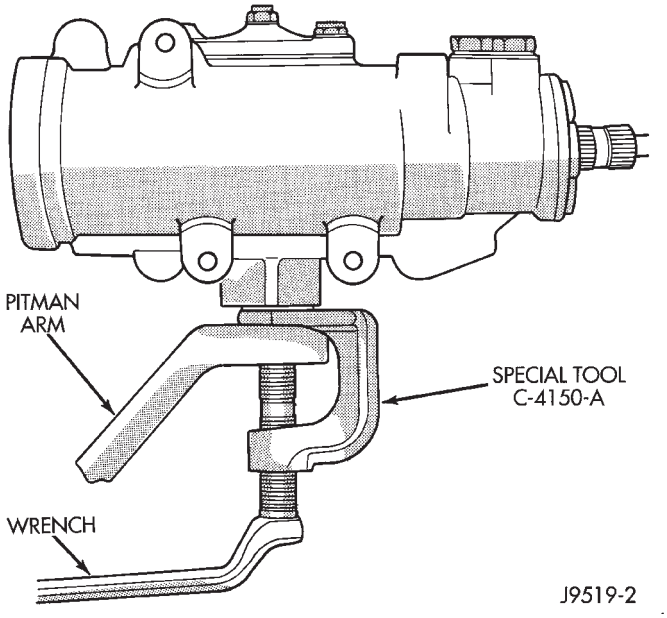

Fig. 4 Pitman Arm Removal

(2) Install the washer and nut on the shaft. Tighten the nut to 251 N·m (185 ft. lbs.) torque.

(3) Install drag link ball stud to pitman arm (Fig. 4). Install and tighten nut to 74 N·m (55 ft. lbs.) torque. Install a new cotter pin.

STEERING LINKAGE—YJ

INDEX

	page		page
Drag Link	20	Steering Damper	20
Pitman Arm	20	Tie Rod	19
Service Information	19		

SERVICE INFORMATION

The steering linkage consists of a pitman arm, drag link, tie rod, and steering damper. Adjustment sleeves are used on the tie rod and drag link for toe and steering wheel alignment.

Refer to Group 2, Front Suspension and Axle for additional information.

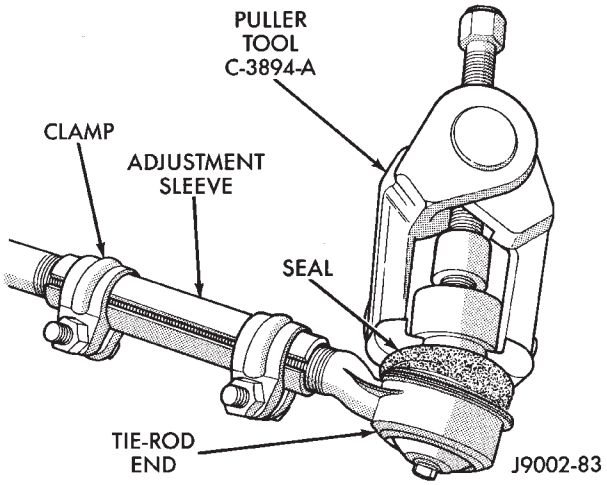

Fig. 1 Ball Stud Removal

The tie-rod end ball stud seals should be inspected during all oil changes.

A damaged ball stud seal requires removal of the seal. Inspect the tie-rod end ball stud at the throat opening. Check for lubricant loss, contamination, ball stud wear or corrosion. If these conditions exist, replace the tie-rod. A replacement seal can be installed if lubricant is in good condition. Otherwise, a complete replacement ball stud end should be installed. Lubricate the tie-rod end with MOPAR® Multi-Mileage Lubricant, or equivalent product.

Use Puller C-3894-A for tie rod removal. Failure to use this tool could damage the ball stud and seal (Fig. 1).

TIE ROD

REMOVAL

(1) Remove the cotter pins and nuts at the steering knuckles and drag link (Fig. 2). Remove the steering damper from the tie rod.

(2) Loosen the ball studs with a puller tool to remove the tie rod.

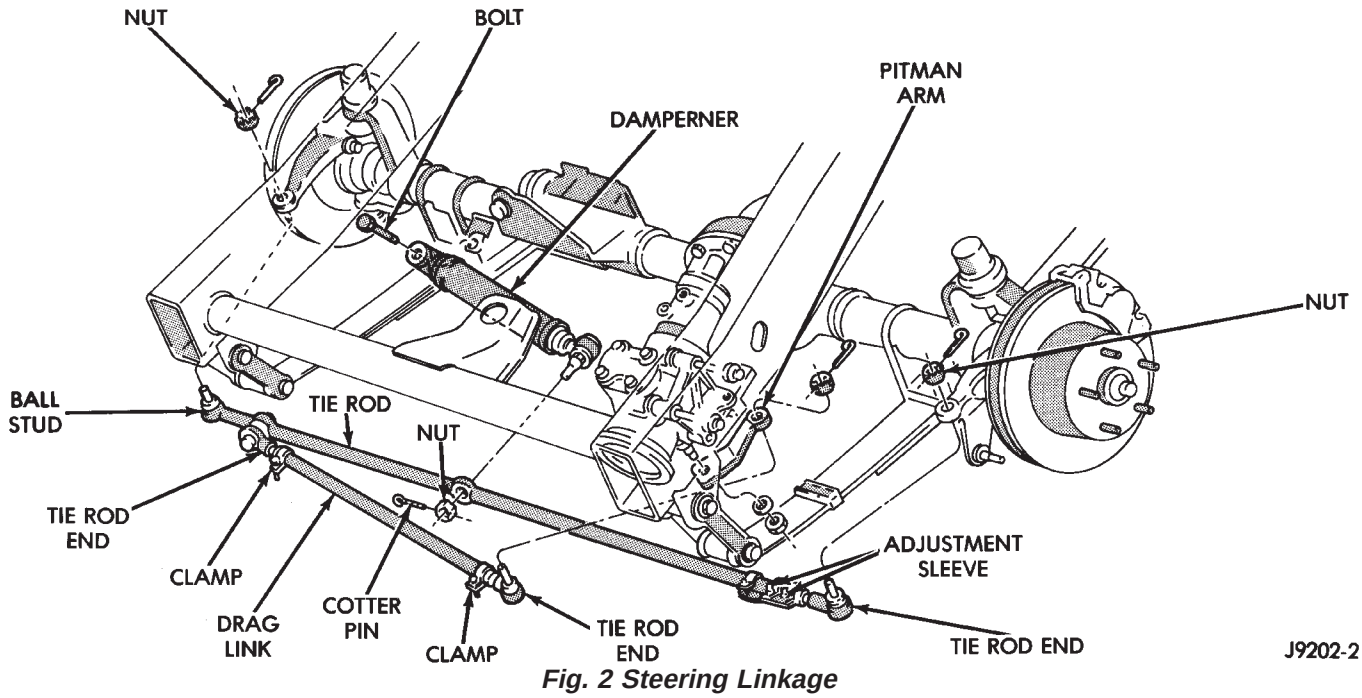

Fig. 2 Steering Linkage

(3) If necessary, loosen the end clamp bolts and remove the tie rod end from the tube.

INSTALLATION

(1) If necessary, install the tie rod end in the tube (Fig. 2). Position the tie rod clamp as shown (Fig. 3). Tighten the ball-stud end clamp bolts to 49 N·m (36 ft. lbs.) torque.

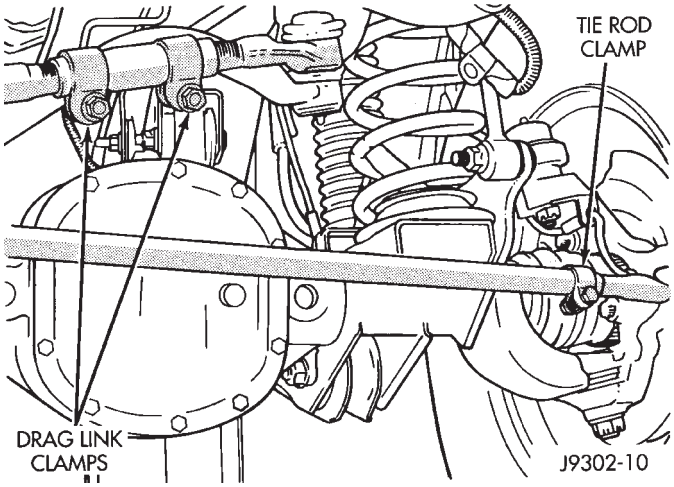

Fig. 3 Tie Rod/Drag Link Clamp Bolt

(2) Install the tie rod on the drag link and steering knuckles. Install the retaining nuts. Install the steering damper to the tie rod.

(3) Tighten the ball stud nut on the steering knuckle to 47 N·m (35 ft. lbs.) torque. Tighten the ball stud nut to drag link to 75 N·m (55 ft. lbs.) torque. Tighten the steering damper nut to 74 N·m (55 ft. lbs.) torque. Install new cotter pins.

DRAG LINK

REMOVAL

(1) Remove the cotter pins and nuts at the tie rod and pitman arm (Fig. 2).

(2) Remove the drag link from the tie rod and pitman arm with a puller tool.

(3) If necessary, loosen the end clamp bolts and remove the tie rod ends from the tube.

INSTALLATION

(1) Install the drag link adjustment sleeve and tie rod ends. Position clamp bolts as shown (Fig. 3).

(2) Position the drag link at the steering linkage (Fig. 2).

Install the drag link to tie rod and pitman arm.

(3) Tighten the nut at the pitman arm to 74 N·m (55 ft. lbs.) torque. Tighten the tie rod ball stud nut to 75 N·m (55 ft. lbs.) torque. Install new cotter pins.

STEERING DAMPER

REMOVAL

(1) Place the front wheels in a straight-ahead position.

(2) Remove the steering damper retaining nut and bolt from the axle bracket (Fig. 2).

(3) Remove the cotter pin and nut from the ball stud at the tie rod (Fig. 2).

(4) Remove the steering damper ball stud from the tie rod with a puller tool.

INSTALLATION

(1) Install the steering damper to the axle bracket and tie rod.

(2) Install the steering damper bolt in the axle bracket. Tighten the nut to 74 N·m (55 ft. lbs.) torque.

(3) Install the ball stud nut at the tie rod. Tighten the nut to 74 N·m (55 ft. lbs.) torque. Install a new cotter pin.

PITMAN ARM

REMOVAL

(1) Remove the cotter pin and nut from the drag link at the pitman arm.

(2) Remove the drag link ball stud from the pitman arm with a puller.

(3) Remove the nut and washer from the steering gear shaft. Mark the pitman shaft and pitman arm for installation reference. Remove the pitman arm from steering gear with Puller C-4150-A (Fig. 4).

INSTALLATION

(1) Align and install the pitman arm on steering gear shaft.

(2) Install the washer and nut on the shaft. Tighten the nut to 251 N·m (185 ft. lbs.) torque.

(3) Install drag link ball stud to pitman arm (Fig. 4). Install and tighten nut to 74 N·m (55 ft. lbs.) torque. Install a new cotter pin.

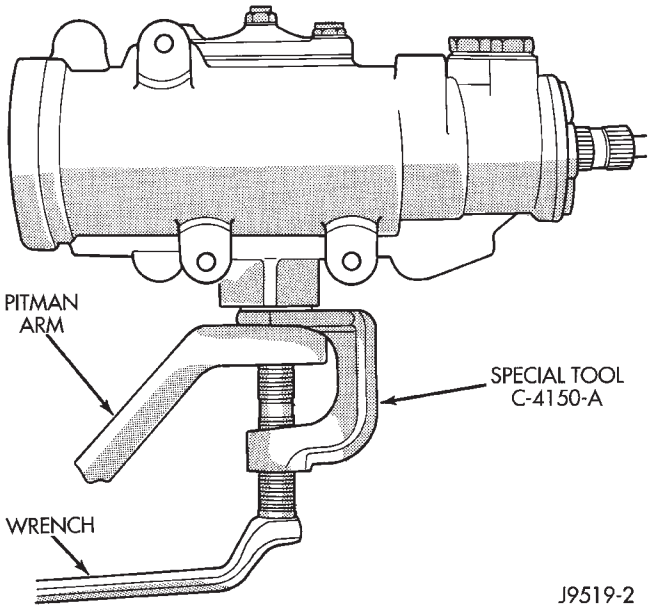

Fig. 4 Pitman Arm Removal

RECIRCULATING BALL POWER STEERING GEAR

INDEX

	page
Adjuster Plug Assembly Replacement	29
Check Valve Replacement	35
Gear Disassembly Information	26
Housing End Plug	28
Intermediate—Coupling Shaft	23
Pitman Shaft and Side Cover Replacement	28
Pitman Shaft Seals and Bearing Replacement	34
Pitman Shaft Seals—In Car Replacement	23
Rack Piston and Worm Shaft Replacement	32
Service Information	21
Steering Gear Adjustments	24
Steering Gear Replacement	23
Valve Replacement	30

SERVICE INFORMATION

A recirculating-ball steering gear is used with the power (assisted) steering system (Fig. 1). The power steering gear can be adjusted and internally serviced.

Discard all O-ring seals during disassembly, they are not re-usable.

Safety goggles should be worn at all times when involved with power steering gear or pump service.

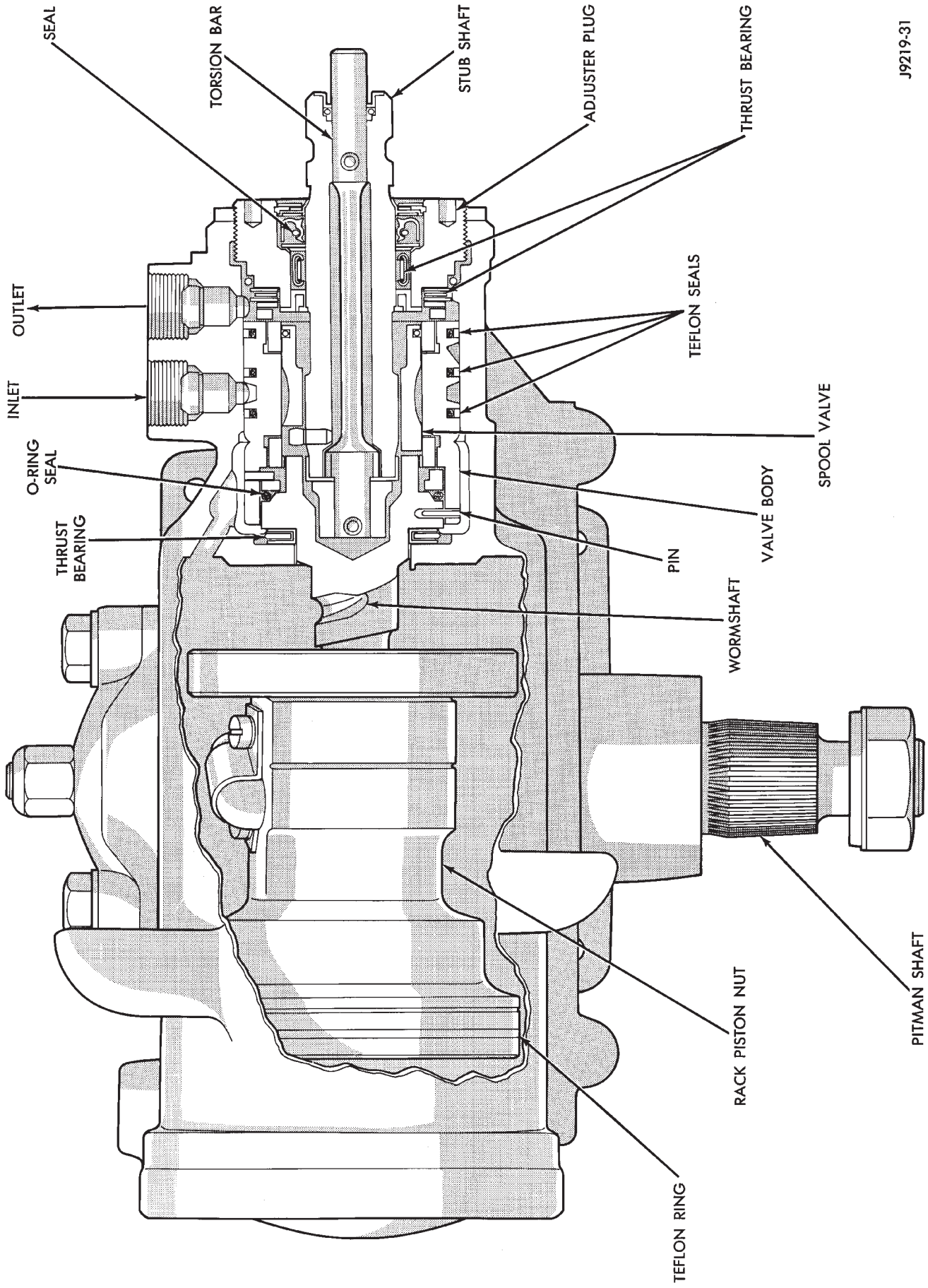

Fig. 1 Power Steering Gear

PITMAN SHAFT SEALS—IN CAR REPLACEMENT

REMOVAL

(1) Remove pitman arm from gear. Refer to Pitman Arm Removal in Steering Linkage.

(2) Clean exposed end of pitman shaft and housing. Use a wire brush to clean the shaft splines.

(3) Remove retaining ring with snap ring pliers (Fig. 2).

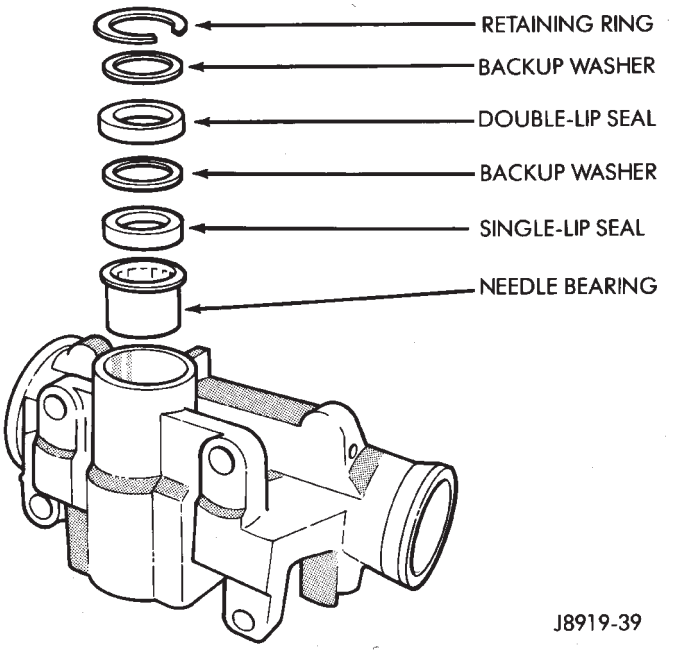

Fig. 2 Pitman Shaft Seals

CAUTION: Use care not to score the housing bore when prying out seals and washers.

(4) Remove backup washer and double lip seal with screwdriver.

- Start the engine and turn the steering wheel fully to the LEFT to force out the seals and washers.
- Stop the engine

(5) Remove backup washer and single lip seal with screwdriver.

(6) Inspect the housing for burrs and remove if necessary. Inspect the pitman shaft seal surface for roughness and pitting. If pitted replace shaft.

INSTALLATION

(1) Install single lip seal with Installer or a suitable size deep socket (Fig. 3).

(2) Coat the double lip seal and washer with grease.

(3) Install the backup washer.

(4) Install the double lip seal.

(5) Install the backup washer.

(6) Install the retainer ring with snap ring pliers.

(7) Center the steering gear.

(8) Install the pitman arm. Refer to Pitman Arm Installation in Steering Linkage.

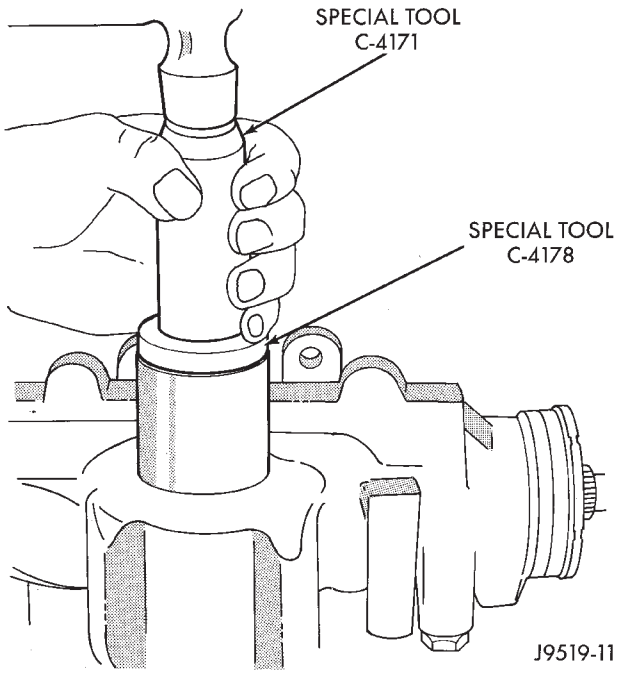

Fig. 3 Pitman Shaft Seal Installation

(9) Add power steering fluid. Refer to Power Steering Initial Operation.

INTERMEDIATE—COUPLING SHAFT

REMOVAL

(1) Place the front wheels in the straight ahead position.

(2) Remove the shaft pinch bolt at the steering gear and column (Fig. 4, 5). Unbolt steering gear from frame rail to remove shaft. Refer to Steering Gear Replacement in this section.

INSTALLATION

(1) Align the intermediate (coupler) shaft to the steering gear and column.

(2) Position the steering gear on the frame. Refer to Steering Gear Replacement in this section.

(3) Install and tighten the pinch bolts to 34 N·m (25 ft. lbs.) torque.

STEERING GEAR REPLACEMENT

REMOVAL

(1) Place the front wheels in the straight ahead position with the steering wheel centered.

(2) Disconnect and cap the fluid hoses from steering gear. Refer to Pressure and Return Hose Replacement in this Group.

(3) Remove the column coupler shaft from the gear. Refer to the removal procedures in this section.

(4) Remove pitman arm from gear. Refer to Pitman Arm Removal in the Steering Linkage section.

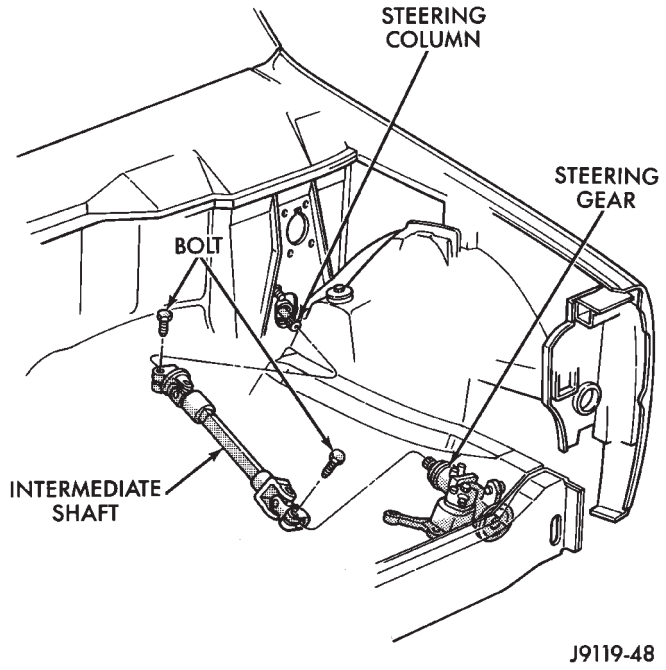

Fig. 4 Coupler Shaft—XJ

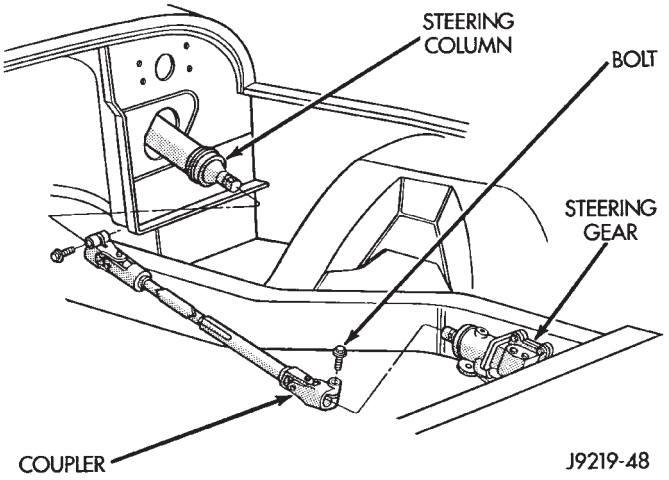

Fig. 5 Coupler Shaft—YJ

(5) Remove the steering gear retaining bolts and nuts. Remove the steering gear from the vehicle (Fig. 6, 7).

INSTALLATION

(1) Align the column coupler shaft to steering gear. Refer to Column Coupler installation in this section.

(2) Position the steering gear (and bracket) on the frame rail and install the bolts.

- XJ—Tighten the bolts to 95 N·m (70 ft. lbs.) torque
- YJ—Tighten the bolts to 105 N·m (78 ft. lbs.) torque

(3) Align and install the pitman arm. Refer to Pitman Arm Installation in the Steering Linkage section.

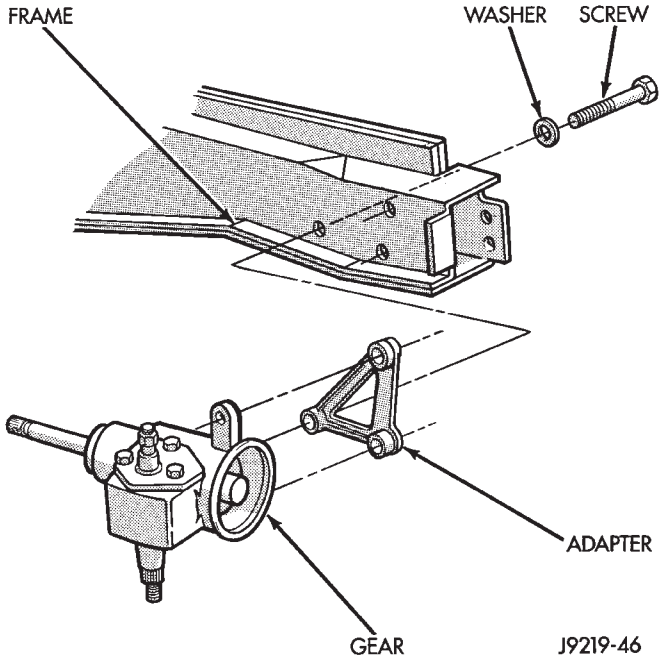

Fig. 6 Steering Gear Mounting—XJ

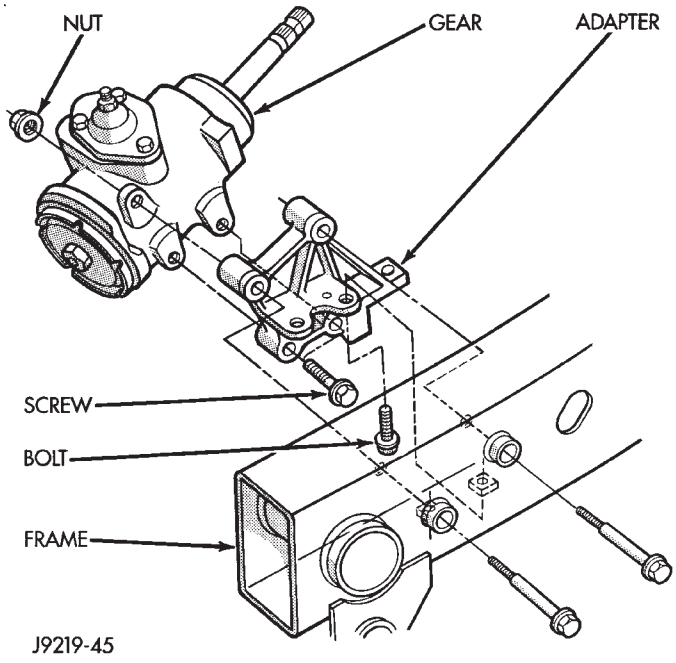

Fig. 7 Steering Gear Mounting—YJ

(4) Connect fluid hoses to steering gear. Refer to Pressure and Return Hose Replacement in this Group.

STEERING GEAR ADJUSTMENTS

SERVICE INFORMATION

Adjusting the steering gear in the vehicle is **NOT** recommended. Remove the gear from the vehicle and mount in a vise. Drain the power steering fluid and make the following adjustments in this order:

- FIRST - worm thrust bearing preload

• SECOND - over-center preload adjustment

WORM THRUST BEARING PRELOAD ADJUSTMENT

(1) Remove adjuster plug locknut (Fig. 8).

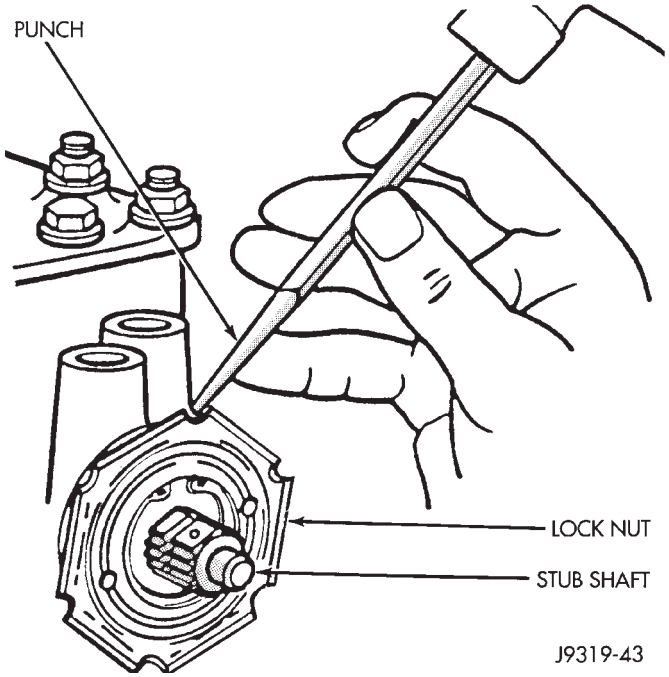

Fig. 8 Loosening the Adjuster Plug Locknut

(2) Turn the adjuster in with Spanner Wrench C-4381. Tighten the plug and thrust bearing in the housing until firmly bottomed in housing.

(3) Place an index mark on the housing even with one of the holes in adjuster plug (Fig. 9).

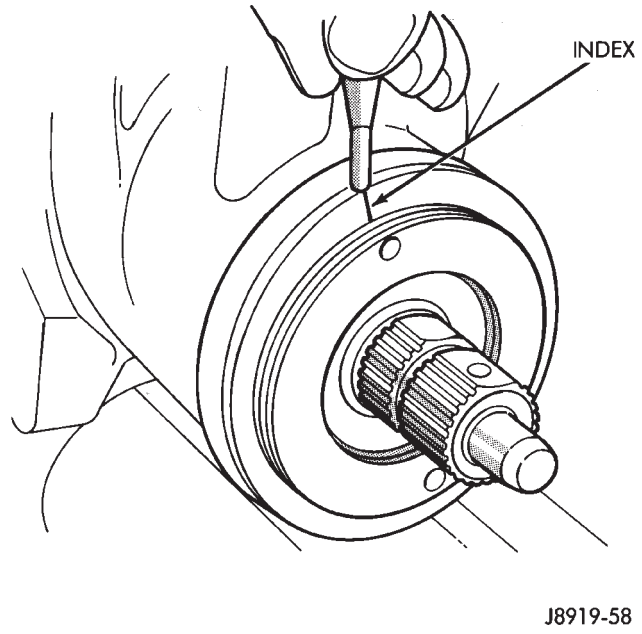

Fig. 9 Alignment Marking On Housing

(4) Measure back (counterclockwise) 13 mm (0.50 in) and mark housing (Fig. 10).

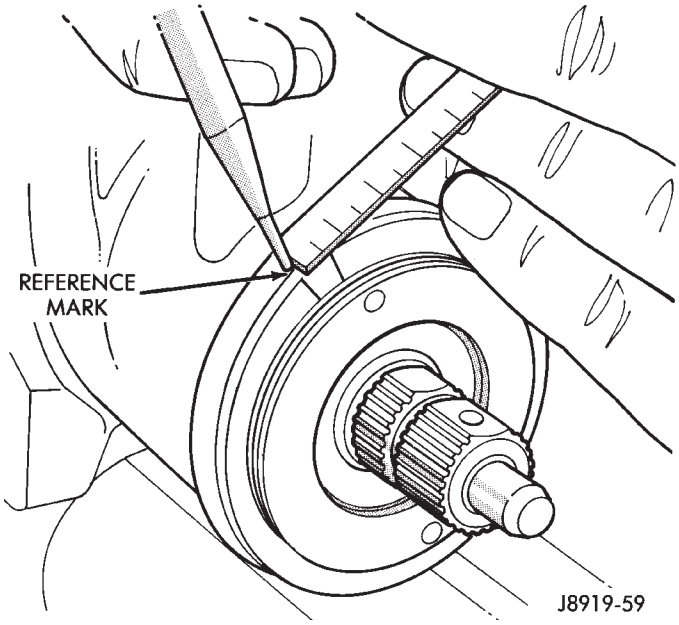

Fig. 10 Remarking The Housing

(5) Rotate adjustment cap back (counterclockwise) with spanner wrench until hole is aligned with the second mark (Fig. 11).

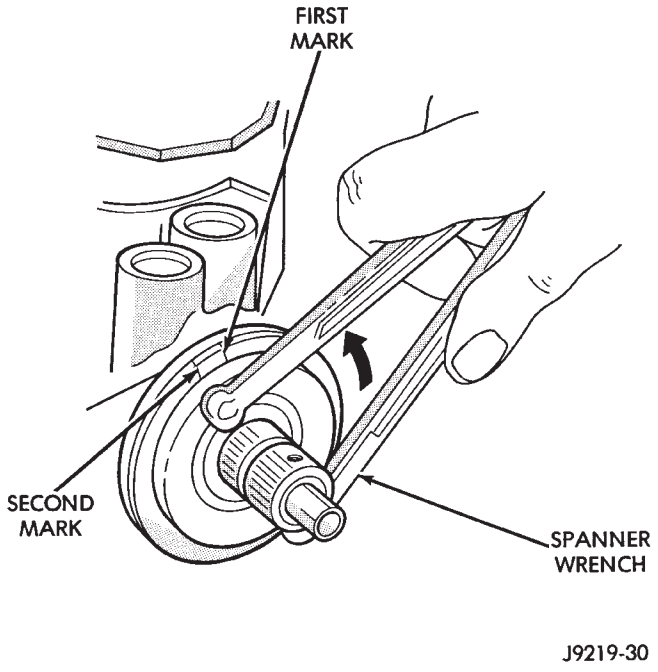

Fig. 11 Aligning To The Second Mark

(6) Install and tighten locknut to 109 N·m (80 ft. lbs.) torque. Be sure adjustment cap does not turn while tightening the locknut.

OVER-CENTER ADJUSTMENT

(1) Rotate the stub shaft from stop to stop and count the number of turns.

(2) Starting at either stop turn the stub shaft back 1/2 the total number of turns. This is the center of the gear travel (Fig. 12).

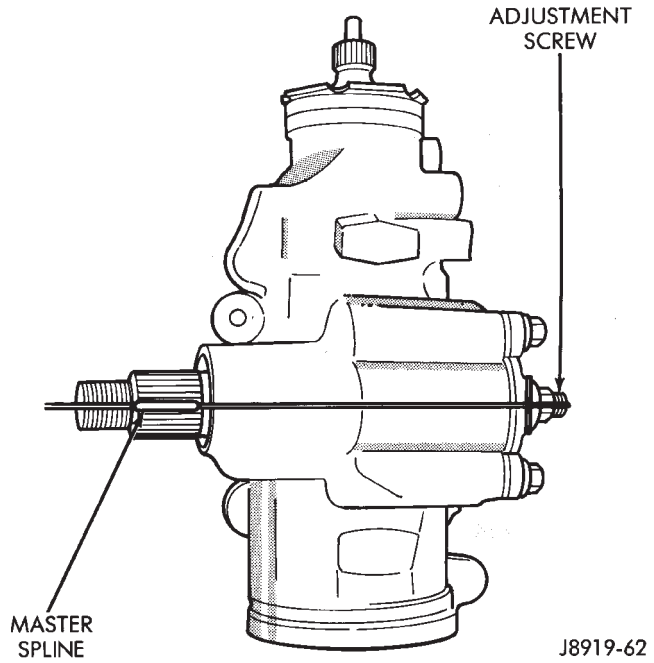

Fig. 12 Steering Gear Centered

(3) Turn the pitman shaft adjuster screw back (COUNTERCLOCKWISE) until extended, then turn back in (CLOCKWISE) one full turn.

(4) Place the torque wrench in the vertical position on the stub shaft. Rotate the wrench 45 degrees each side of the center and record the highest rotational torque on center (Fig. 13).

(5) Turn the adjuster in until torque to turn stub shaft is 0.6 to 1.2 N·m (6.0 to 10.0 in. lbs.) more than reading in Step 4.

(6) Prevent the adjuster screw from turning while tightening adjuster lock nut. Tighten the adjuster lock nut to 49 N·m (36 ft. lbs.).

GEAR DISASSEMBLY INFORMATION

CAUTION: Cleanliness is extremely important when repairing a power steering gear. Keep the bench, tools and components clean at all times. Thoroughly clean the exterior of the gear with cleaning solvent before disassembly. Drain as much of the fluid as possible. Use protective vise jaws at all times when clamping components. During assembly, lubricate all components with power steering fluid except where noted (Fig. 14).

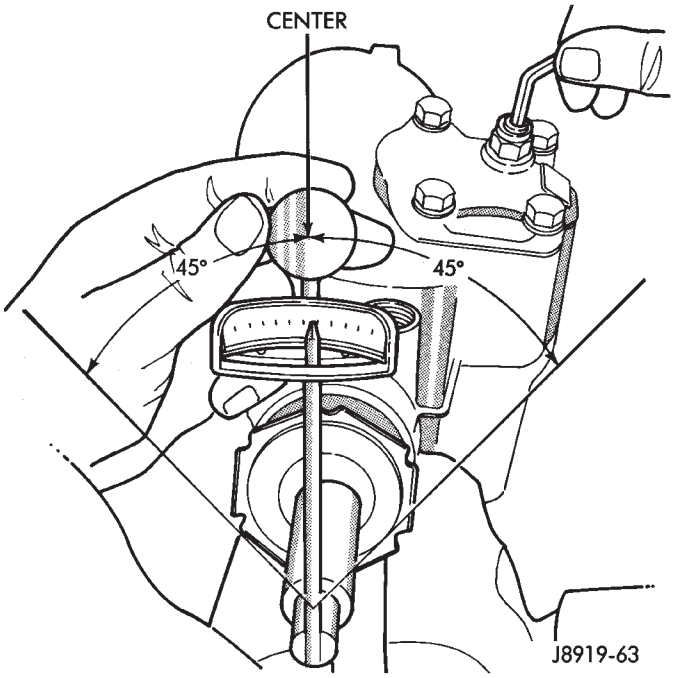

Fig. 13 Checking Over-center Rotation Torque

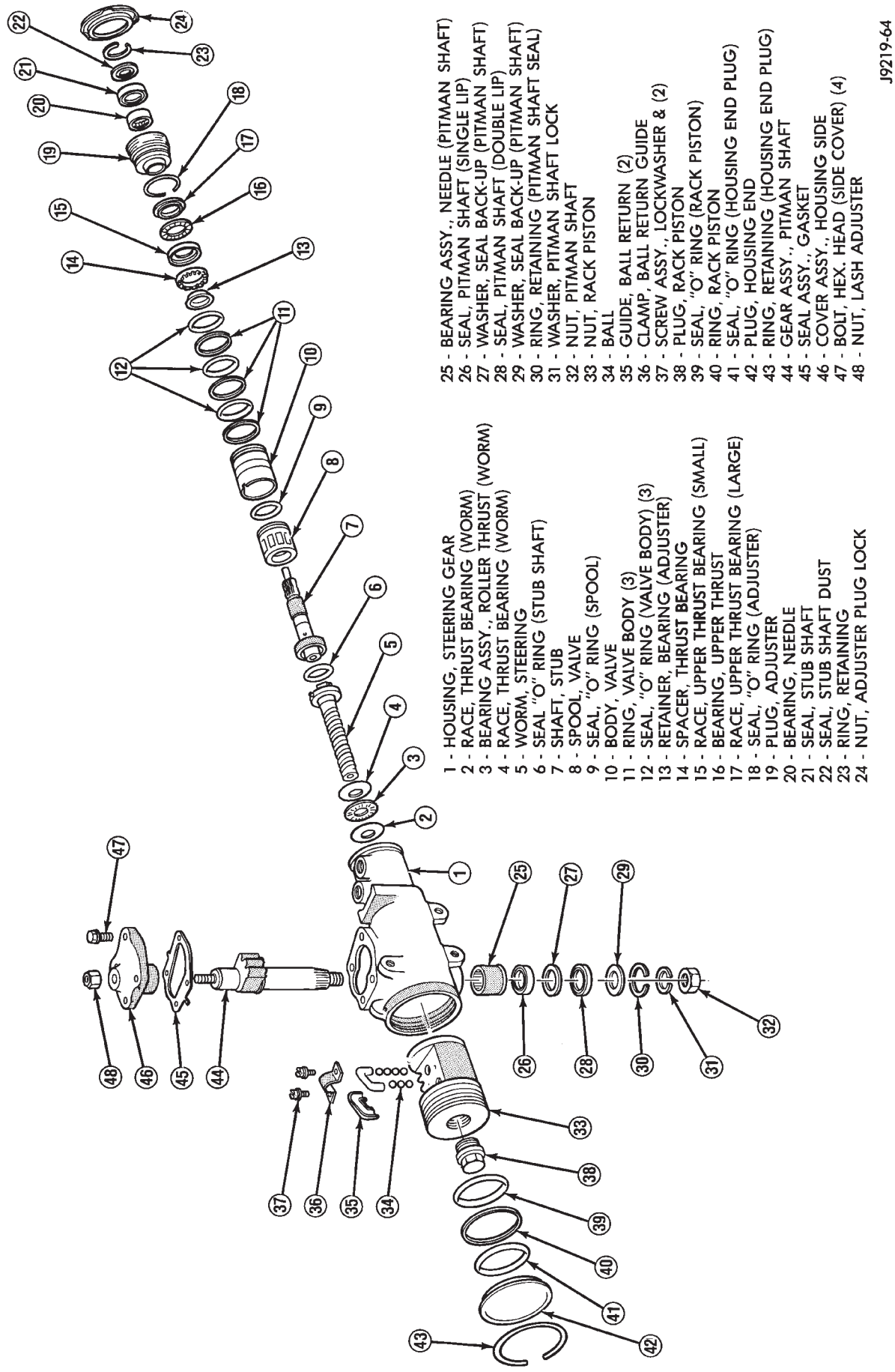

Fig. 14 Power Steering Gear

PITMAN SHAFT AND SIDE COVER REPLACEMENT

REMOVE

(1) Remove steering gear from vehicle. Refer to Power Steering Gear Replacement in this section.

(2) Remove pitman arm from steering gear. Refer to Pitman Arm Removal in the Steering Linkage section.

(3) Rotate stub shaft back and forth to drain power steering fluid.

DISASSEMBLE

- Clean exposed end of pitman shaft and housing.
- Clean pitman shaft spline with a wire brush.

(1) Remove preload adjuster nut.

(2) Rotate stub shaft with socket to center gear. Remove side cover bolts.

(3) Remove side cover, gasket and pitman shaft as an assembly.

(4) Remove pitman shaft from the side cover (Fig. 15).

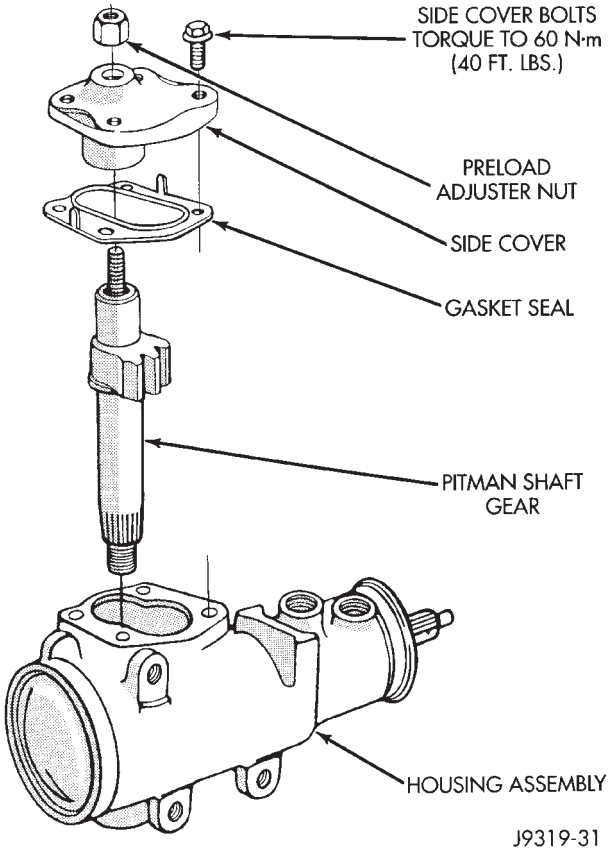

Fig. 15 Side Cover and Pitman Shaft

ASSEMBLE

(1) Install pitman shaft to side cover by screwing shaft in until it fully seats to side cover.

(2) Install preload adjuster nut. **Do not tighten nut until after pitman shaft adjustment has been made.**

(3) Install gasket to side cover and bend tabs around edges of side cover.

(4) Install pitman shaft assembly and side cover to housing.

(5) Install side cover bolts and tighten to 60 N·m (44 ft. lbs.).

(6) Adjust pitman shaft, refer to Over-Center Adjustment.

INSTALL

(1) Install steering gear. Refer to Power Steering Gear Replacement in this section.

(2) Install pitman arm onto steering gear. Refer to Steering Linkage in this Group.

HOUSING END PLUG

REMOVE

(1) Remove steering gear from vehicle. Refer to Power Steering Gear Replacement in this section.

(2) Remove pitman arm from steering gear. Refer to Steering Linkage in this Group.

(3) Rotate stub shaft back and forth to drain power steering fluid.

DISASSEMBLE

- Rotate stub shaft back and forth to drain fluid

(1) Rotate retaining ring until one end is under the hole in the housing. Unseat and force ring from groove (Fig. 16).

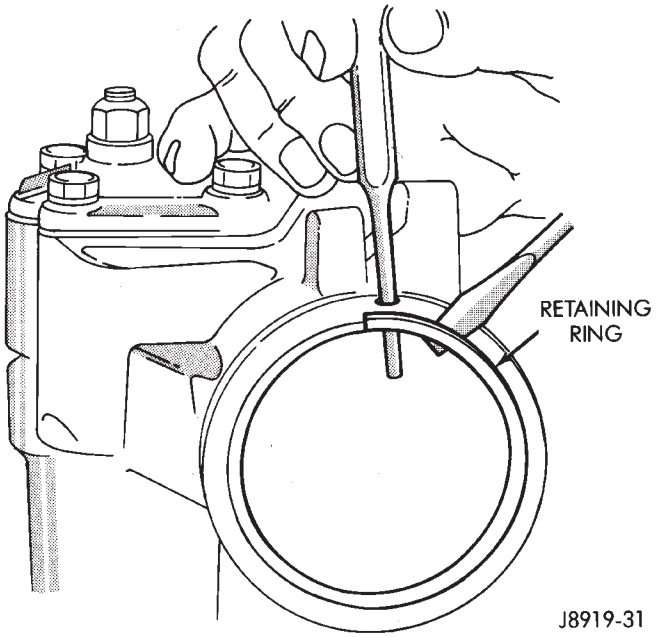

Fig. 16 End Plug Retaining Ring

(2) Rotate stub shaft slowly COUNTER-CLOCKWISE to remove end plug out from housing (Fig. 17).

CAUTION: Do not turn stub shaft any farther than necessary. The recirculating balls will drop out of the rack piston circuit and fall inside the rack piston chamber.

(3) Remove O-ring seal (Fig. 17).

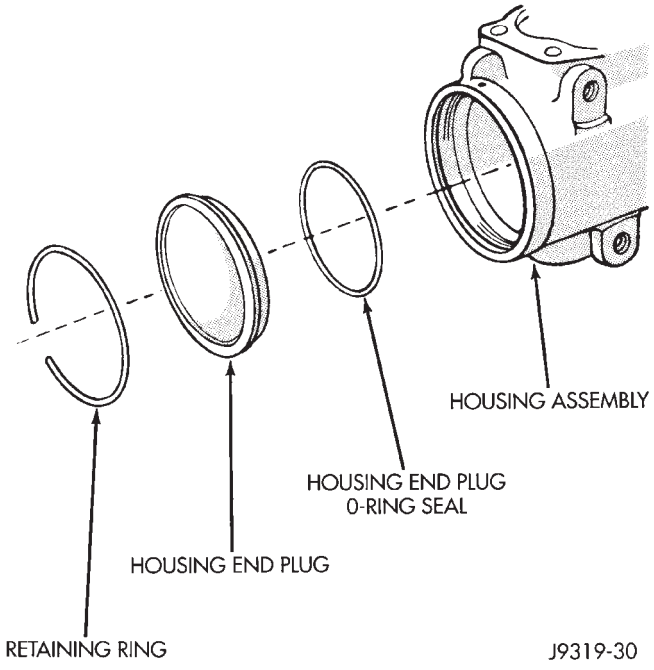

Fig. 17 End Plug Components

ASSEMBLE

- Lubricate O-ring seal with power steering fluid

(1) Install O-ring into housing.

(2) Install plug, tap lightly with a plastic mallet to seat it.

(3) Install retaining ring with open end 25 mm (1 inch) from access hole (Fig. 18).

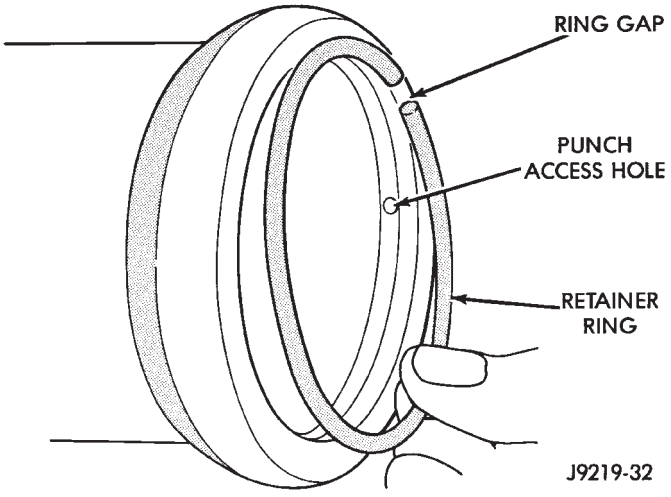

Fig. 18 Installing The Retaining Ring

INSTALL

(1) Install steering gear. Refer to Power Steering Gear Replacement in this section.

(2) Install pitman arm onto steering gear. Refer to Steering Linkage in this Group.

ADJUSTER PLUG ASSEMBLY REPLACEMENT

REMOVE

(1) Remove steering gear from vehicle. Refer to Power Steering Gear Replacement in this section.

DISASSEMBLE

(1) Remove adjuster plug lock nut from housing.

(2) Remove adjuster plug from housing with Spanner Wrench C-4381 (Fig. 19).

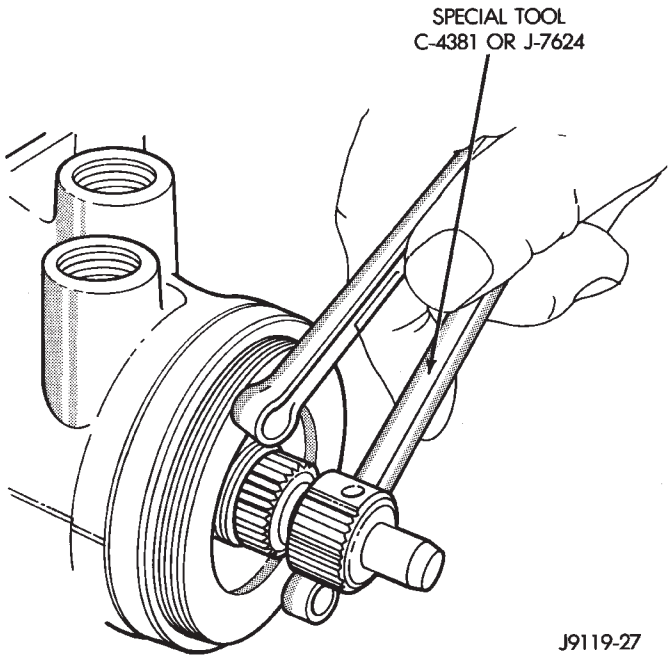

Fig. 19 Remove/Install Adjustment Plug

(3) Remove thrust washer bearing retainer from adjuster plug with screwdriver (Fig. 20).

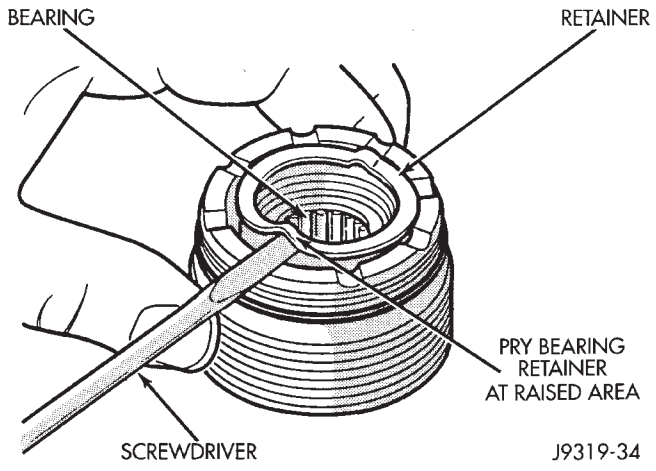

Fig. 20 Remove Retainer

(4) Remove bearing spacer, races and thrust bearing (Fig. 21).

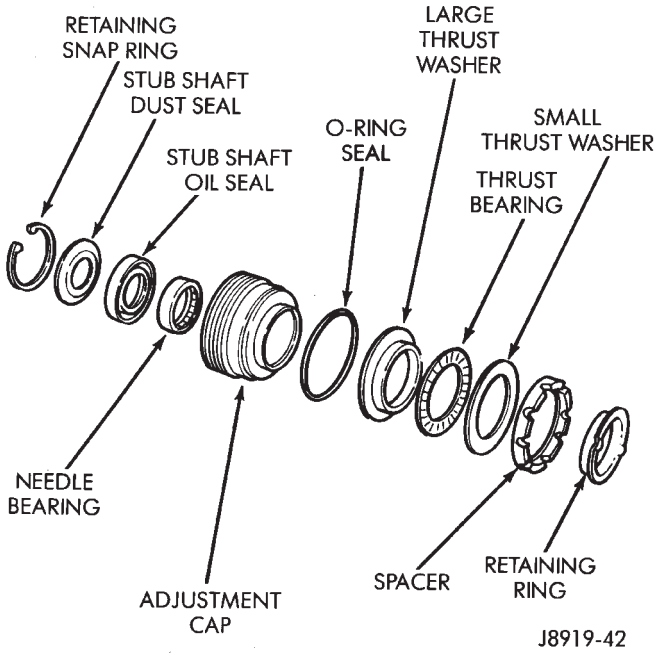

Fig. 21 Adjustment Plug Components

(5) Remove O-ring seal.

(6) Remove retaining snap ring.

(7) Remove needle bearing, dust seal and lip seal with tool C-4177 and handle C-4171 (Fig. 22).

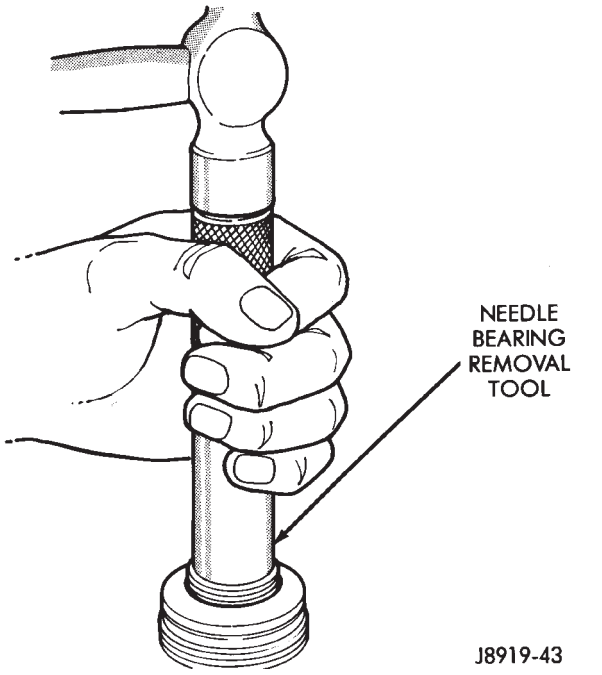

Fig. 22 Needle Bearing Removal

ASSEMBLE

CAUTION: Needle bearing must be installed with identification on bearing facing tool to prevent damage to bearing.

(1) Install needle bearing into adjuster plug with tool C-4177 and handle C-4171.

(2) Apply white petroleum grease on lip seal. Install lip seal into adjuster plug with tool C-4177 and handle C-4171.

(3) Apply white petroleum grease to dust seal cavity and install dust seal into adjuster plug with tool C-4177 and handle C-4171.

(4) Install retainer snap ring.

(5) Install O-ring seal to adjuster plug.

(6) Install large bearing race, thrust bearing, small bearing race and bearing spacer to adjuster plug.

(7) Install thrust washer bearing retainer to adjuster plug (Fig. 23).

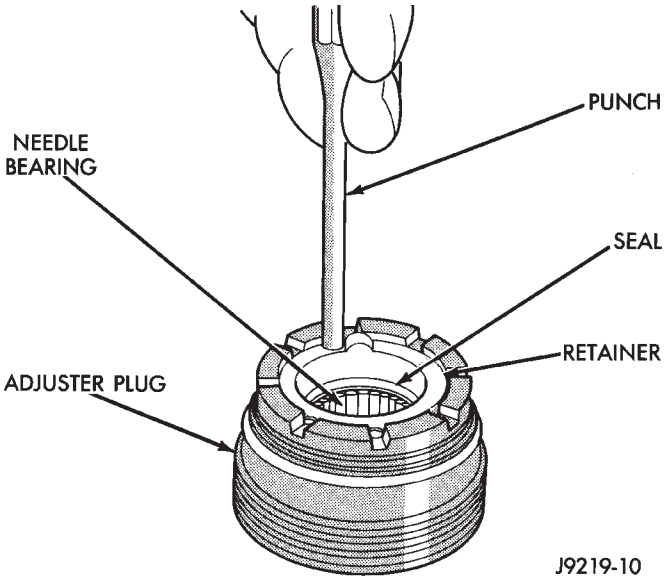

Fig. 23 Install Retainer

CAUTION: When installing adjuster plug, care should be taken NOT to cut the seals.

(8) Install adjuster plug into housing with Spanner Wrench C-4381.

(9) Adjust bearing preload, refer to Thrust Bearing Preload Adjustment.

(10) Install adjuster plug lock nut, and using a punch (drift) in a notch, tighten securely (Fig. 24). **Hold adjuster plug to maintain alignment of the marks.**

(11) Adjust pitman shaft. Refer to Over-Center Adjustment.

INSTALL

(1) Install steering gear. Refer to Power Steering Gear Replacement in this section.

VALVE REPLACEMENT

REMOVE

(1) Remove steering gear from vehicle. Refer to Power Steering Gear Replacement in this section.

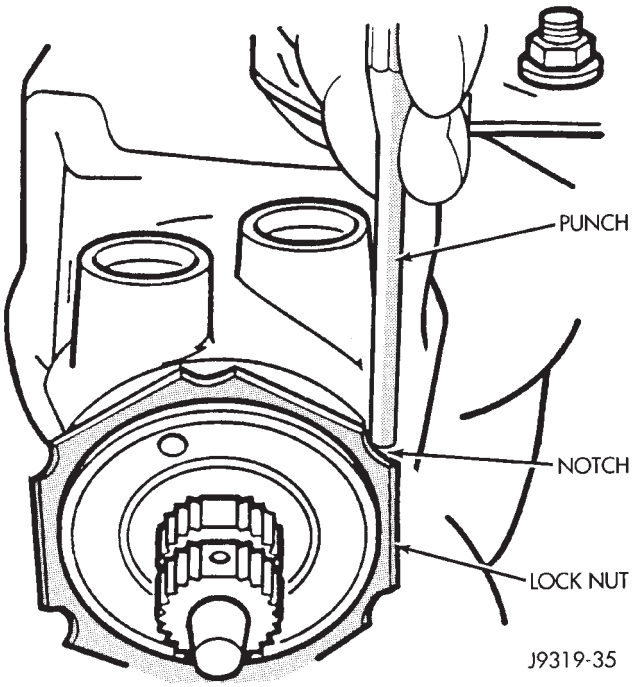

Fig. 24 Tighten Lock Nut

DISASSEMBLE

(1) Remove adjuster plug, refer to Adjuster Plug Assembly Replacement.

(2) Remove stub shaft and valve assembly (Fig. 25).

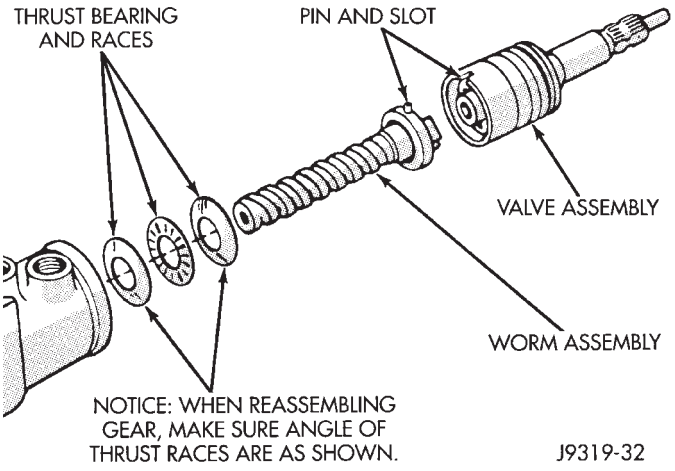

Fig. 25 Bearing, Worm and Valve Assembly

(3) Remove stub shaft from valve assembly, if necessary.

- Tap stub shaft lightly on a block of wood to loosen shaft cap
- Pull cap and valve body and disengage stub shaft pin from hole in valve body (Fig. 26).

(4) Remove valve assembly if necessary.

- Remove valve spool by pulling and rotating from valve body (Fig. 27).
- Remove valve spool O-ring seal

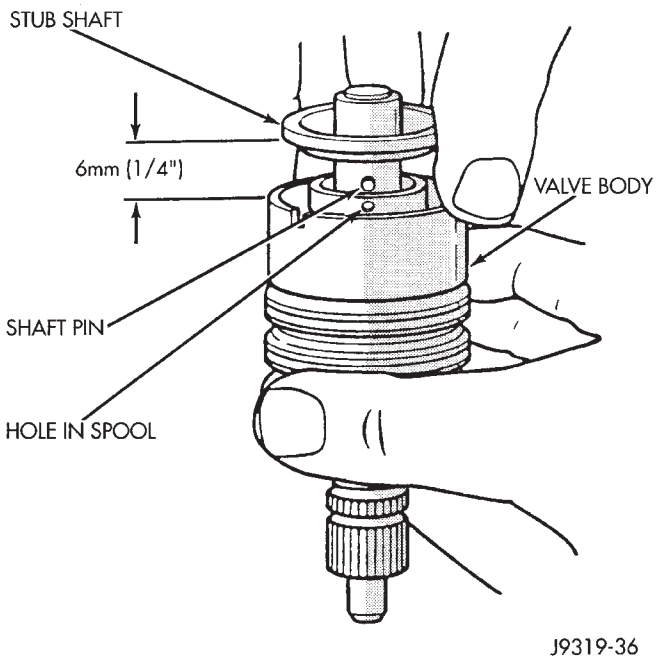

Fig. 26 Remove and Install Stub Shaft

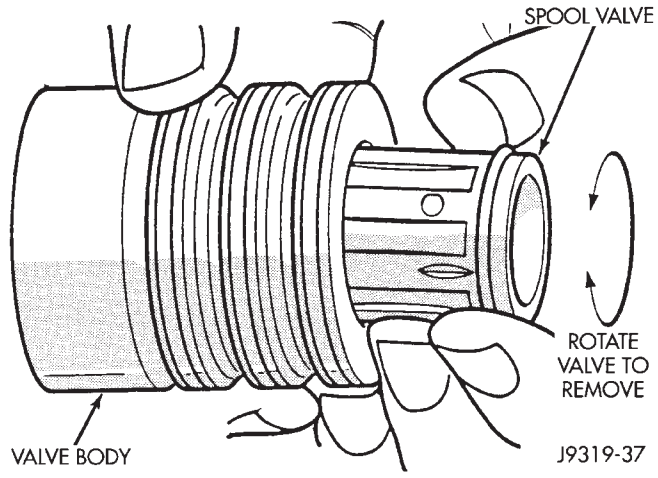

Fig. 27 Remove and Install Spool

- Remove valve body teflon rings and O-ring seals (Fig. 28).

ASSEMBLE

(1) Install valve spool O-ring seal to valve spool.

(2) Lubricate valve spool and O-ring seal with power steering fluid.

(3) Install valve spool to valve body by pushing and rotating. Hole in valve spool for stub pin must be accessible from opposite end of valve body.

(4) Assemble stub shaft to valve spool, if necessary and insert pin (Fig. 29).

- Notch in stub shaft cap MUST fully engage valve body pin and seat against valve body shoulder.

(5) Install O-ring seals and teflon rings to valve body.

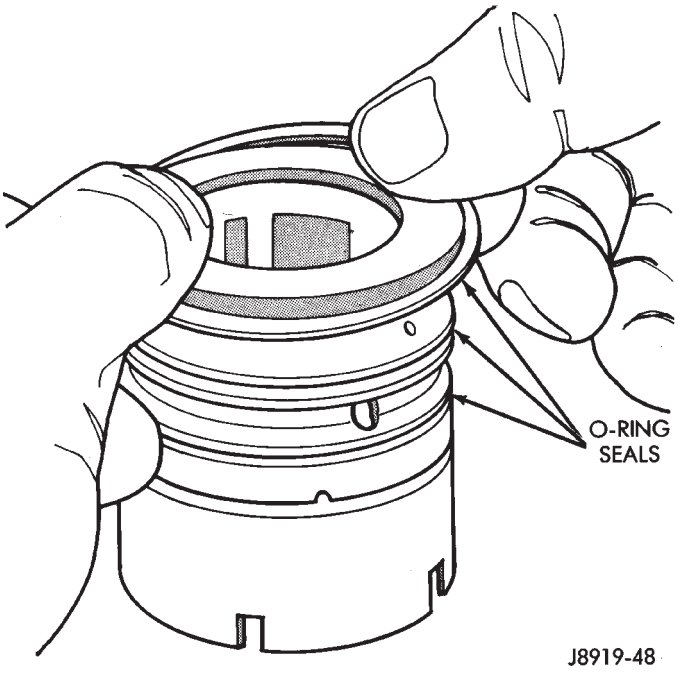

Fig. 28 Remove and Install Valve Seals

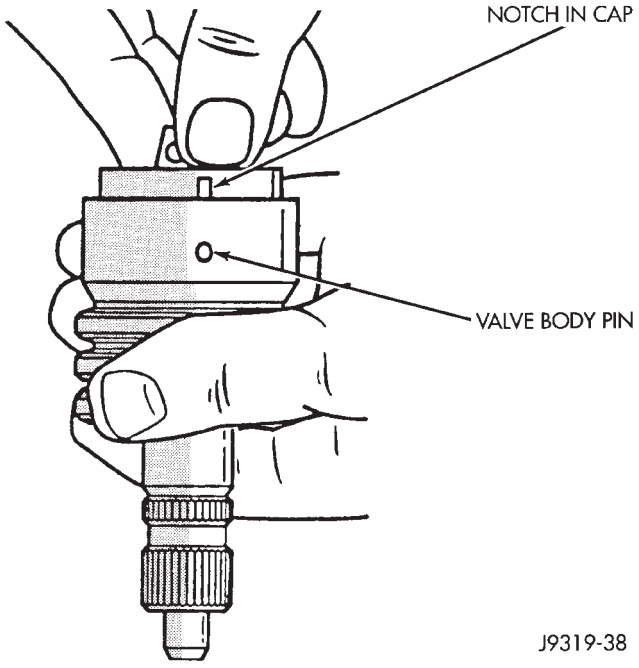

Fig. 29 Stub Shaft Installation

(6) Lubricate O-ring seals and teflon rings with power steering fluid.

(7) Install stub shaft and valve assembly to worm shaft, fitting on worm shaft to slot in the valve assembly.

(8) Adjust Thrust Bearing Preload Adjustment and Over-Center Adjustment. Refer to Steering Gear Adjustments in this section.

INSTALL

(1) Install steering gear. Refer to Power Steering Gear Replacement in this section.

RACK PISTON AND WORM SHAFT REPLACEMENT

REMOVE

(1) Remove steering gear from vehicle. Refer to Power Steering Gear Replacement in this section.

DISASSEMBLE

(1) Remove pitman shaft and side cover. Refer to Side Cover and Pitman Shaft Replacement in this section.

(2) Remove housing plug end. Refer to Housing End Plug Replacement in this section.

(3) Turn stub shaft COUNTERCLOCKWISE until the rack piston begins to come out of the housing.

(4) Remove rack piston plug (Fig. 30).

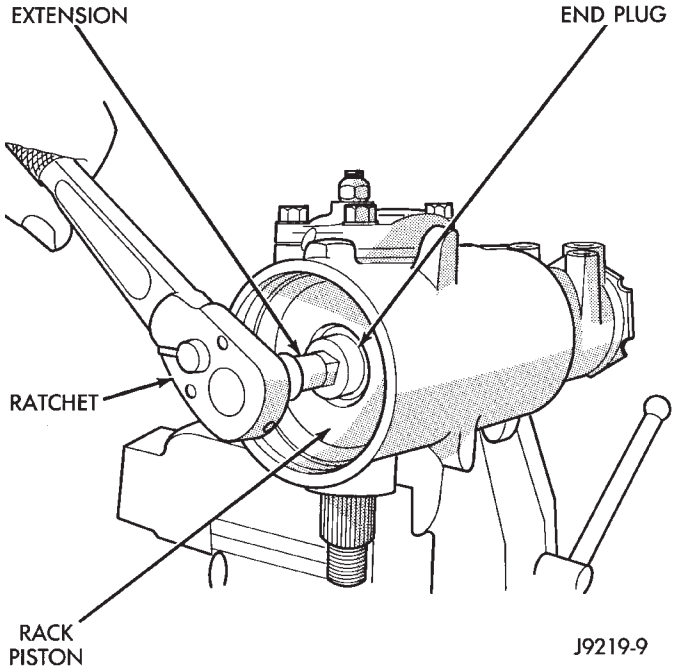

Fig. 30 Remove and Install Rack Piston End Plug

(5) Insert Arbor C-4175 into bore of rack piston (Fig. 31). Hold tool tightly against worm shaft while turning the stub shaft COUNTERCLOCKWISE.

• The rack piston will be forced onto the tool and hold the rack piston balls in place.

(6) Remove the rack piston, rack balls, and tool together from housing.

(7) Remove valve. Refer to Valve Replacement in this section.

(8) Remove worm shaft.

(9) Remove thrust bearing and races.

(10) Remove tool from rack piston.

(11) Remove rack piston balls.

(12) Remove screws, clamp and ball guide.

(13) Remove teflon ring and O-ring seal (Fig. 32).

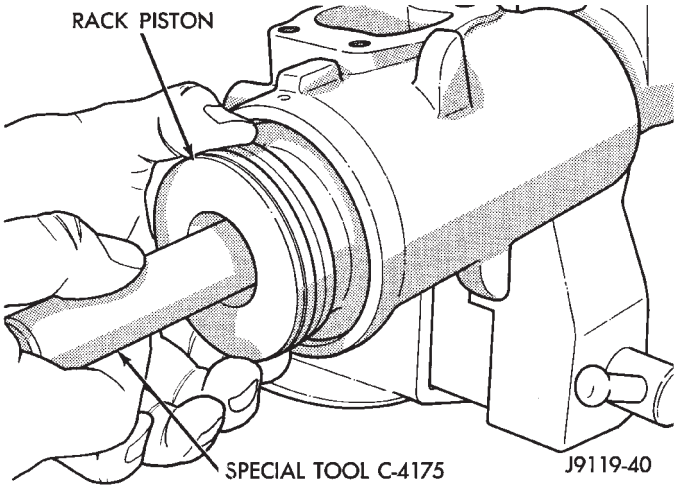

Fig. 31 Remove and Install Rack Piston

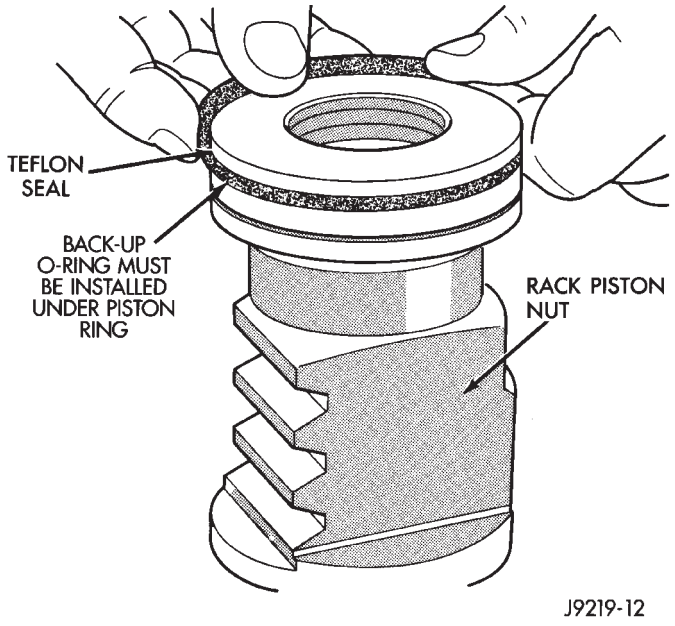

Fig. 32 Remove and Install Seal on Rack Piston

CLEAN AND INSPECTION

(1) Wash all components in clean solvent and dry with compressed air.

(2) Check for scores, nicks or burrs on the rack piston finished surface. Slight wear is normal on the worm gear surfaces.

ASSEMBLE

(1) Install O-ring seal and teflon ring and lubricate with power steering fluid.

(2) Install worm shaft to rack piston outside of housing. Fully seat worm shaft to rack piston and align worm shaft spiral groove with rack piston ball guide hole (Fig. 33).

WARNING: MAKE SURE ALL RACK PISTON BALLS ARE REINSTALLED IN THE RACK PISTON. IMPROPER INSTALLATION MAY RESULT IN PERSONAL INJURY.

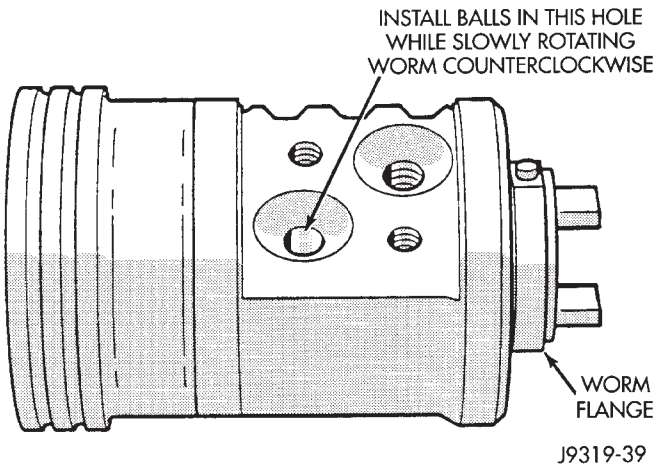

Fig. 33 Installing Balls in Rack Piston

There are 24 balls in the rack piston circuit, 12 are black and 12 are silver (Chrome). The black rack piston balls are smaller than the silver balls. THE BLACK AND SILVER BALLS MUST BE INSTALLED ALTERNATELY INTO THE RACK PISTON AND BALL GUIDE. This procedure will maintain worm shaft preload.

(3) Lubricate and install rack piston balls through return guide hole while turning wormshaft COUNTERCLOCKWISE.

(4) Install remaining balls to guide using grease or petroleum jelly at each end to hold in place (Fig. 34).

(5) Install guide onto rack piston and return with clamp and screws. Tighten screws to 58 N·m (43 in. lbs.) torque.

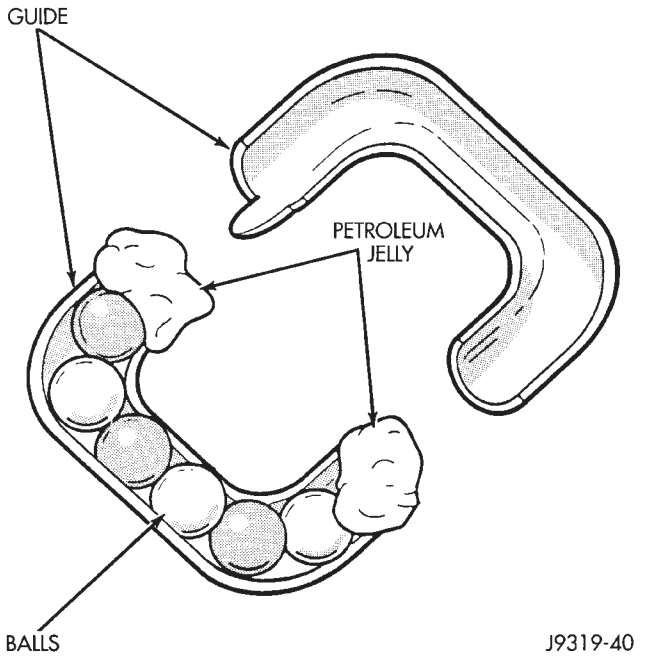

Fig. 34 Balls in the Return Guide

(6) Insert Arbor C-4175 into bore of rack piston. Hold tool tightly against worm shaft while turning

the stub shaft COUNTERCLOCKWISE.

• The rack piston will be forced onto the tool and hold the rack piston balls in place.

(7) Install the races and thrust bearing to worm shaft (Fig. 35).

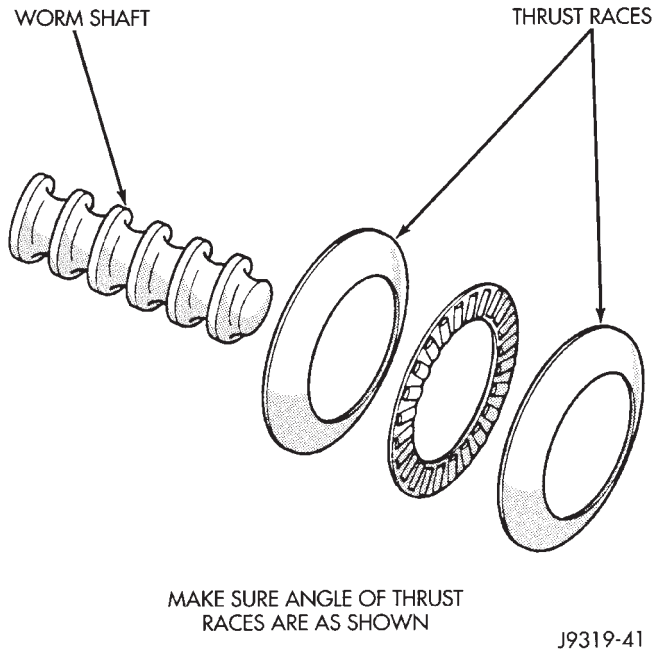

Fig. 35 Worm Shaft and Bearing

(8) Install worm shaft to housing.

(9) Install valve. Refer to Valve Replacement in this section.

(10) Install rack piston to worm shaft from tool, compress seals.

• Hold Arbor tightly against worm shaft and turn stub shaft CLOCKWISE until rack piston is seated on worm shaft.

WARNING: MAKE SURE ALL RACK PISTON BALLS ARE REINSTALLED IN THE RACK PISTON. IMPROPER INSTALLATION MAY RESULT IN PERSONAL INJURY.

(11) Install rack piston plug and tighten to 150 N·m (111 ft. lbs.) torque.

(12) Install housing end plug. Refer to Housing End Plug Replacement in this section.

(13) Install pitman shaft and side cover. Refer to Side Cover and Pitman Shaft Replacement in this section.

(14) Adjust steering gear. Refer to Steering Gear Adjustments in this section.

INSTALL

(1) Install steering gear. Refer to Power Steering Gear Replacement in this section.

PITMAN SHAFT SEALS AND BEARING REPLACEMENT

REMOVE

(1) Remove steering gear from vehicle. Refer to Power Steering Gear Replacement in this section.

DISASSEMBLE

(1) Remove pitman arm from gear. Refer to Pitman Arm Removal in Steering Linkage.

(2) Clean exposed end of pitman shaft and housing. Use a wire brush to clean the shaft splines.

(3) Remove retaining ring with snap ring pliers (Fig. 36).

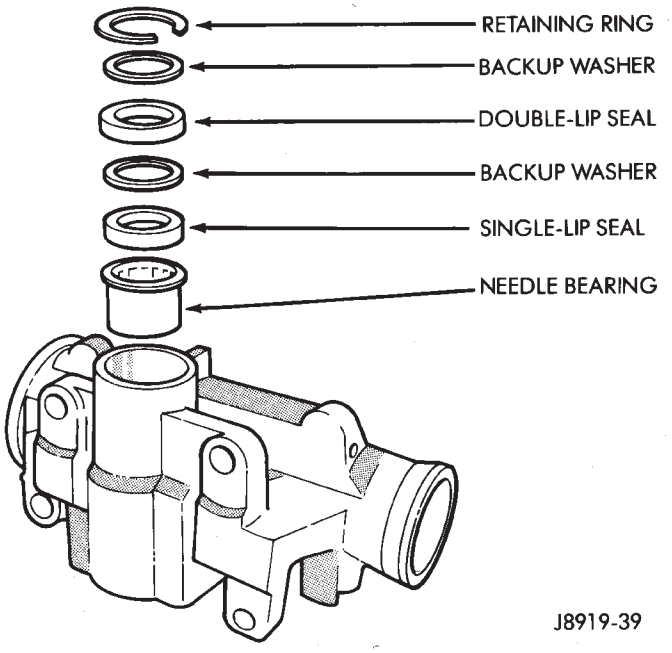

Fig. 36 Pitman Shaft Seals

CAUTION: Use care not to score the housing bore when prying out seals and washers.

(4) Remove backup washer and double lip seal with screwdriver.

(5) Remove backup washer and single lip seal with screwdriver.

(6) Inspect the housing for burrs and remove if necessary.

(7) Remove needle bearing from side cover area of housing using tool C-4177 and handle C-4171 (Fig. 37).

ASSEMBLE

(1) Install needle bearing into housing using tool C-4178 and handle C-4171 (Fig. 38).

(2) Install single lip seal with tool C-4178 and handle C-4171 or a suitable size socket (Fig. 39).

(3) Coat the double lip seal and washer with grease.

(4) Install the backup washer.

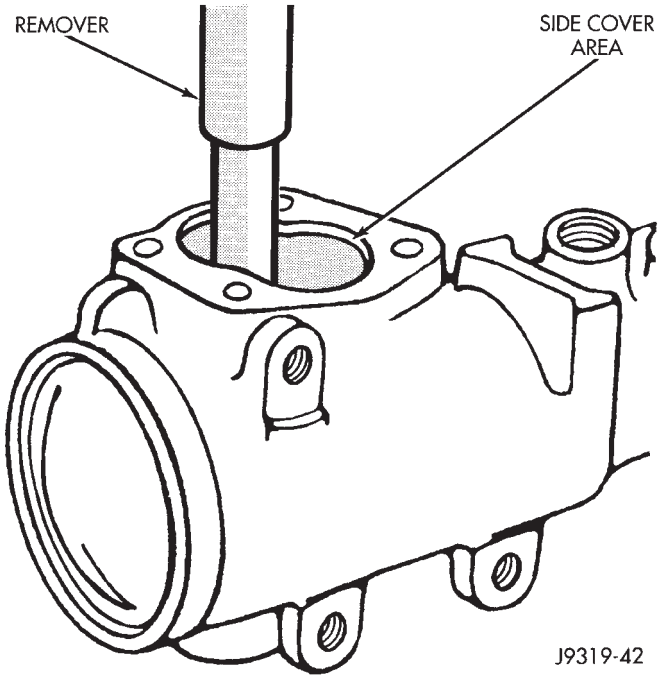

Fig. 37 Needle Bearing Removal

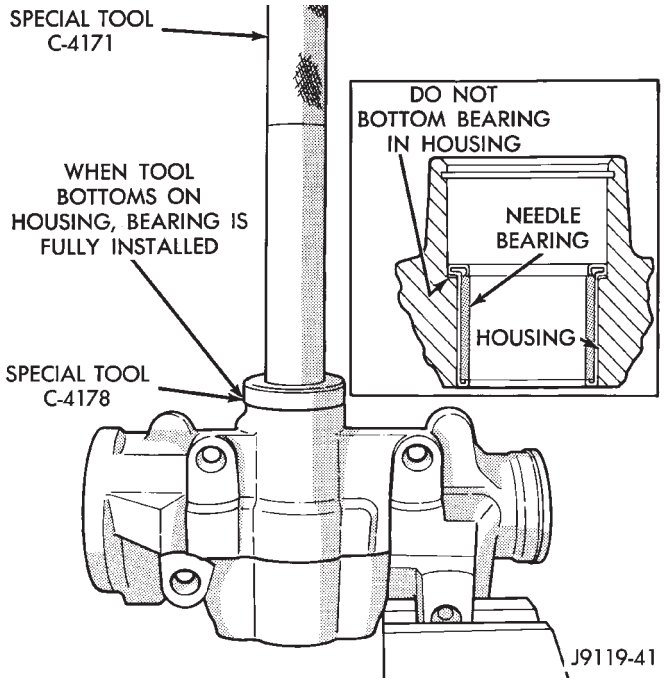

Fig. 38 Pitman Shaft Bearing Installation

(5) Install the double lip seal.
(6) Install the backup washer.
(7) Install the retainer ring with snap ring pliers.
(8) Install the pitman shaft and side cover. Refer to Side Cover and Pitman Shaft Replacement in this section.

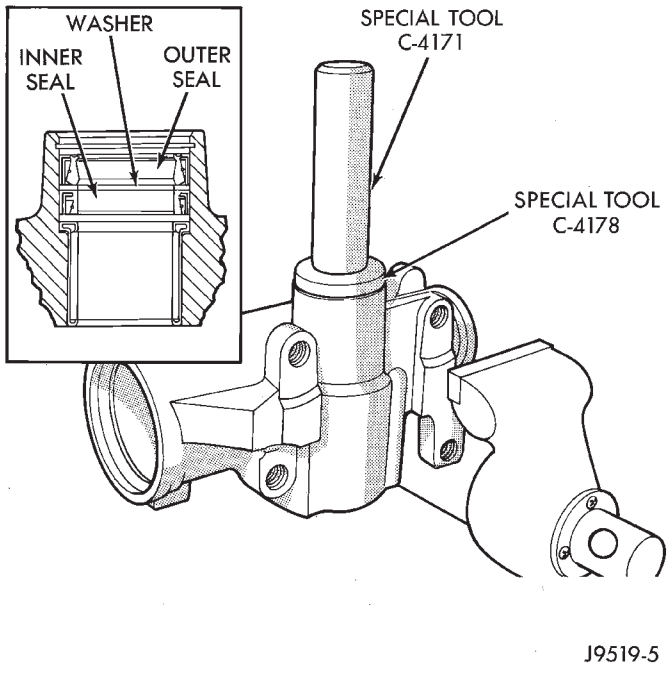

Fig. 39 Pitman Shaft Seal Installation

INSTALL

(1) Install steering gear. Refer to Power Steering Gear Replacement in this section.

CHECK VALVE REPLACEMENT

REMOVE

(1) Remove steering gear from vehicle. Refer to Power Steering Gear Replacement in this section.

DISASSEMBLE

CAUTION: Use care not to damage the threads of the housing when prying out check valve.

(1) Remove valve by prying from housing with a small screwdriver.

ASSEMBLE

(1) Install the valve into the housing with a 3/8-inch diameter piece of tubing 100 mm (4 inches) long.

INSTALL

(1) Install steering gear. Refer to Power Steering Gear Replacement in this section.

POWER STEERING GEAR SPECIFICATIONS

Steering Gear Type . . . . . Recirculating ball with hydraulic assist.

Ratio Code (Top of Gear)
- BH, NZ 14:1
- BF, XS 13-16:1
- AL 12.7:1

Steering Gear Hydraulic Fluid . . . . . Use Mopar Power Steering Fluid, or equivalent.

Steering Gear Lubricants . . . . . Lubricate pitman shaft seals, bearings races, and rack piston recirculating balls with petroleum jelly. Lubricate all other parts with power steering fluid.

Steering Gear Adjustments:
Wormshaft Bearing Preload Torque . . . . . 0.45–1.13 N·m (4 to 10 in-lbs)

Pitman Shaft Overcenter Drag Torque:
New Gear
(less than 400 miles/640 km) . . . . . 0.45–0.90 N·m (4 to 8 in-lbs) in addition to wormshaft bearing preload but not to exceed combined total of 2 N·m (18 in-lbs).

Used Gear
(over 400 miles/640 km) . . . . 0.5–0.6 N·m (4 to 5 in-lbs) in addition to wormshaft bearing preload but not to exeed combined total of 2 N·m (18 in-lbs).

Caution: Gears must be adjusted exactly as outlined in Steering Gear Adjustments-On Bench. Failure to adhere to the recommended procedures may result in gear damage or improper steering response.

J9319-44

MANUAL STEERING GEAR

INDEX

	page		page
Diagnosis	37	Gear Disassembly	39
Gear Adjustments in Vehicle	39	Information	37
Gear Adjustments on Bench	44	Intermediate (Coupler) Shaft	45
Gear Assembly	43	Pitman Shaft Seal Replacement	37
Gear Cleaning and Inspection	42	Steering Gear Replacement	45

INFORMATION

The manual steering gear installed on Jeep vehicles (Fig. 1) has a variable steering ratio.

DIAGNOSIS

PITMAN SHAFT SEAL REPLACEMENT

REMOVAL

(1) Mark pitman arm and shaft positions for reference. Remove pitman arm with Puller 7998.

(2) Remove the pitman shaft seal with a small blade screw driver.

INSPECTION

(1) Inspect the condition of the steering gear lubricant. If contaminated (contains metal particles), remove and overhaul the steering gear.

INSTALLATION

(1) Lubricate the new seal with chassis lubricant.

CAUTION: A protective wrap must be used on the shaft threads/splines during seal installation. If the shaft seals are installed over exposed shaft, the seal lips could be cut or distorted. This can result in leakage after installation.

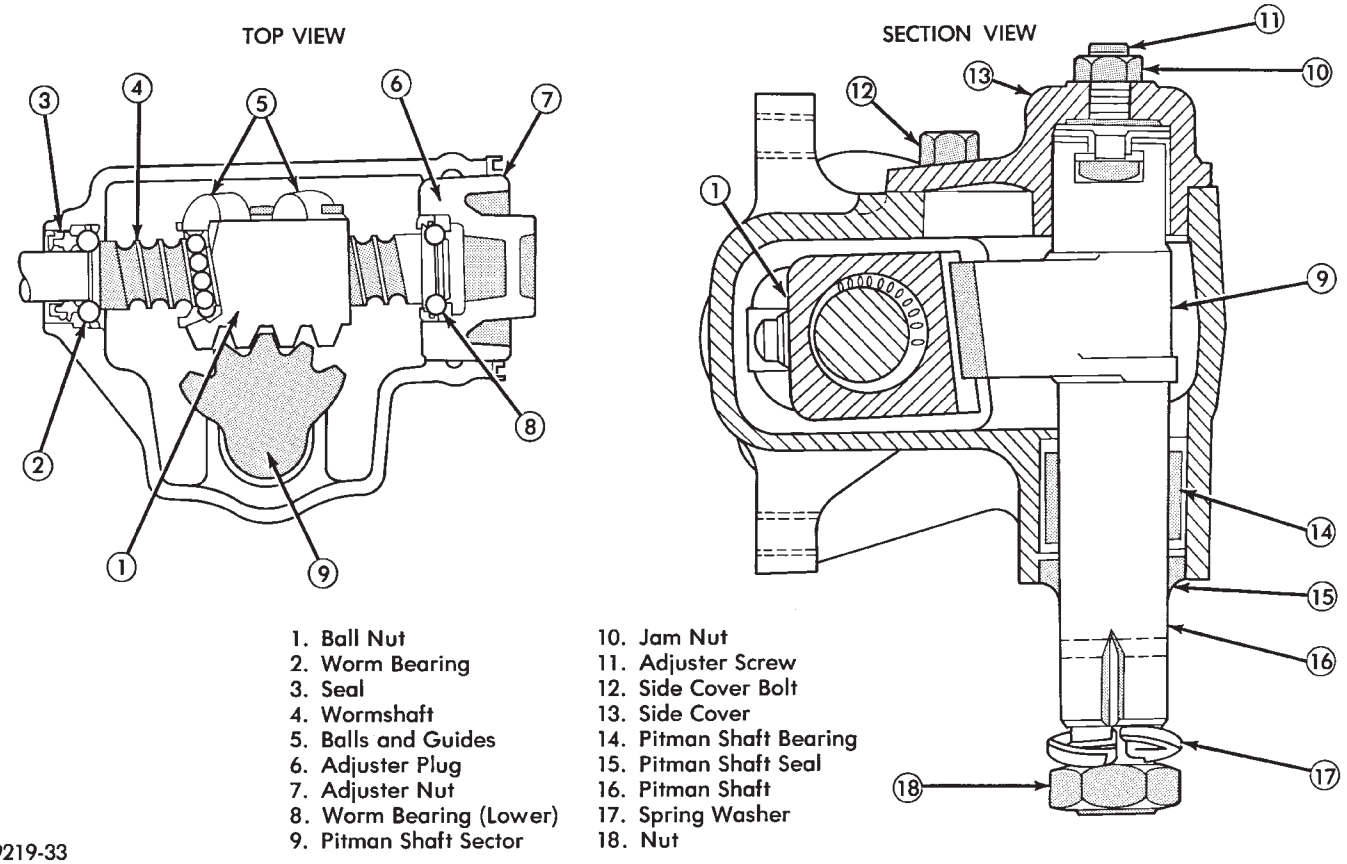

Fig. 1 Manual Steering Gear

MANUAL STEERING SYSTEM DIAGNOSIS

PROBLEM	POSSIBLE CAUSE	CORRECTION
Rattle Or Chuckle In The Steering Gear	1. Insufficient or improper lubricant in the steering gear. 2. Pitman arm loose on the shaft or the steering gear mounting bolts loose. 3. Loose or worn steering shaft bearing. 4. Excesisve over-center lash or worm thrust bearings adjusted too loose. On turns a slight rattle may occur, due to the increased lash between ball nut and pitman shaft as gear moves off the center of "high point" position. This is normal and lash must not be reduced to eliminate this slight rattle.	1. Add lubricant as required. 2. Tighten to specified torque. 3. Replace the steering shaft bearing. 4. Adjust the steering gear to specified preloads.
Poor Return Of The Steering Wheel	1. Steering column misaligned. 2. Insufficient or improper lubricant in the steering gear or front suspension. 3. Steering gear adjusted too tight. 4. Front wheel alignment incorrect (Caster).	1. Align the column. 2. Lubricate as specified. 3. Adjust over-center and thrust bearing preload to specifications. 4. Adjust to specifications.
Excessive Play Or Looseness In The Steering System	1. Front wheel bearings loosely adjusted. 2. Steering system out of alignment. 3. Worn upper ball joints. 4. Steering wheel loose on the shaft, loose pitman arm, tie rods, steering arms or steering linkage ball nuts. 5. Tires badly worn, edge of tires rounded off. 6. Excessive over-center lash. 7. Worm thrust bearings loosely adjusted.	1. Adjust bearings or replace with new parts as necessary. 2. Align caster, camber, and toe-in. 3. Check and replace ball joints if necessary. 4. Tighten to specification, replace if worn or damaged. 5. Install new tires, and check alignment. 6. Adjust over-center preload to specifications. 7. Adjust the worm thrust bearing preload to specifications.
Hard Steering – Excessive Effort Required At The Steering Wheel	1. Low or uneven tire pressure. 2. Insufficient or improper lubricant in the steering gear or front suspension. 3. Steering shaft flexible coupling misaligned. 4. Steering gear adjusted too tight. 5. Front wheel alignment incorrect.	1. Inflate to specified pressures. 2. Lubricate as specified. Relubricate at specified intervals. 3. Align the column and couplings. 4. Adjust over-center and thrust bearing preload to specifications. 5. Check the alignment and correct as necessary.

J9219-26

(2) Wrap a single layer of plastic tape around the pitman shaft threads and splines. This will protect the replacement seals during installation.
(3) Install the seal with a suitable size socket.
(4) Remove the tape from the shaft.
(5) Center the steering gear.
(6) Align and install the pitman arm.
(7) Install the washer and retaining nut on the pitman shaft. Tighten the nut to 251 N·m (185 ft. lbs.) torque.

GEAR ADJUSTMENTS IN VEHICLE

REMOVE

(1) Raise and support the vehicle.
(2) Mark the pitman shaft and pitman arm for installation reference. Remove the pitman arm from the shaft.
(3) Loosen the adjuster lock nut then back the adjuster plug off 1/4 turn.
(4) Remove the steering wheel horn pad.
(5) Turn the steering wheel in one direction until stopped by the gear. Then turn back 1/2 turn.

CAUTION: Do not turn the steering wheel hard against the internal stops when the linkage is removed. This could result in damage to the recirculating ball guides.

MEASURE

Place a low calibration (50 in. lbs.) torque wrench and socket on the steering wheel nut. Rotate the wrench and nut through a 90 degree arc (1/4 turn). This will measure the worm shaft bearing preload.

ADJUST WORMSHAFT BEARING PRELOAD TORQUE

(1) Adjust the preload by tightening the adjuster plug. The preload should be 0.6 to 1 N·m (5 to 8 in. lbs.) torque.

Steering column/shaft misalignment or damage will increase the amount of torque required to rotate the steering wheel. If the rotating torque is exceptionally high, inspect the steering column/shaft alignment. If the alignment is correct, remove the steering gear, determine the cause of the high preload torque, and repair as necessary.

(2) Tighten the adjuster locknut to 68 N·m (50 ft. lbs.) torque. Measure the preload torque. If necessary, adjust the preload torque again.

ADJUST OVERCENTER DRAG TORQUE

(1) Turn the steering wheel from one stop to the other and count the total numbers of turns. Turn the wheel back in reverse direction 1/2 the total number of turns to center the steering gear.
(2) Turn the over center adjusting screw in to remove all lash between the ball nut and pitman shaft sector teeth. Hold the adjustment screw and tighten the lock nut to 34 N·m (25 ft. lbs.) torque.
(3) Check the torque at the steering wheel by taking the highest reading as the wheel is turned through the center position.
(4) The overcenter drag torque should be 0.5 to 1 N·m (4 to 10 in. lbs.).
(5) If necessary, loosen the lock nut and adjust the over center adjuster screw to obtain the proper torque. Re-tighten the lock nut to the lock nut.
(6) After tightening the locknut, measure the overcenter drag torque again and readjust the torque, if necessary.

INSTALL

(1) Align the installation reference marks and install the pitman arm.
(2) Install and tighten the pitman shaft nut and washer to 251 N·m (185 ft. lbs.) torque.
(3) Install the horn button.

GEAR DISASSEMBLY

(1) Rotate the wormshaft from stop-to-stop and count the number of rotations. Rotate the wormshaft in the reverse direction 1/2 of the total number of rotations to center it and the ball nut.
(2) Remove the pitman shaft adjustment screw locknut. Remove the cover retaining bolts, cover, and gasket (Fig. 3).
(3) Slide the adjustment screw head (Fig. 3) out of the pitman shaft T-slot and remove it and the shim(s).
(4) Retain the shim(s) for end-play measurement during assembly.
(5) Remove the pitman shaft, the wormshaft bearing preload torque adjustment cap locknut, and the adjustment cap (Fig. 2).
(6) Remove the wormshaft and the ball nut (Fig. 2).
(7) Remove (pry) the pitman shaft and the wormshaft seals from the steering gear housing (Fig. 3).

WORMSHAFT AND BALL NUT DISASSEMBLY

(1) Remove the upper bearing from the wormshaft (Fig. 2).

CAUTION: Do not allow the ball nut to rotate freely and travel to either extreme end of the wormshaft. This could damage the tangs at the ends of the recirculating ball guides (Fig. 3).

(2) Remove the recirculating ball guide clamp retaining screws, the clamp and the guides (Fig. 2). Separate the half-guides and place the recirculating balls aside in a container.

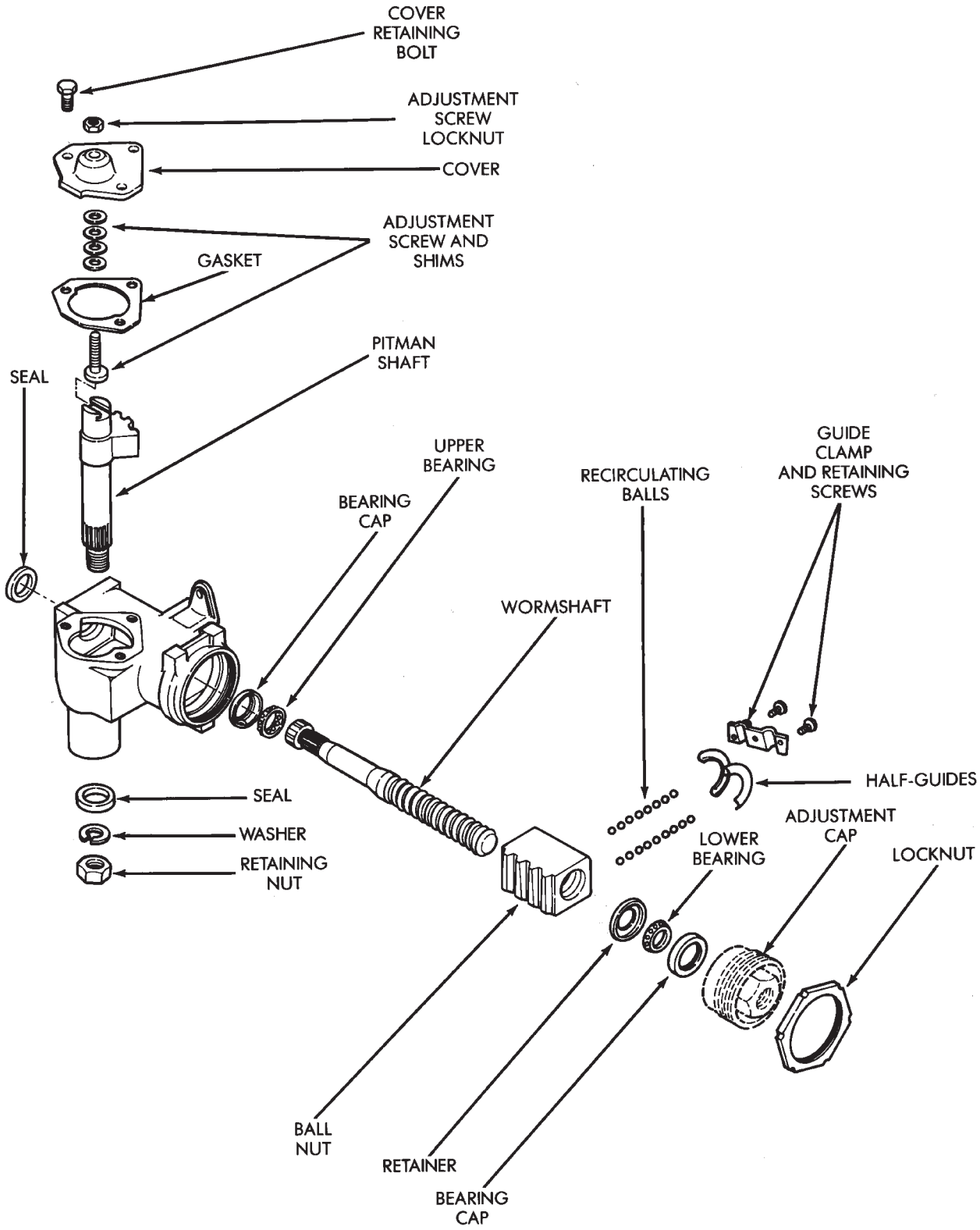

Fig. 2 Manual Steering Gear—Exploded View

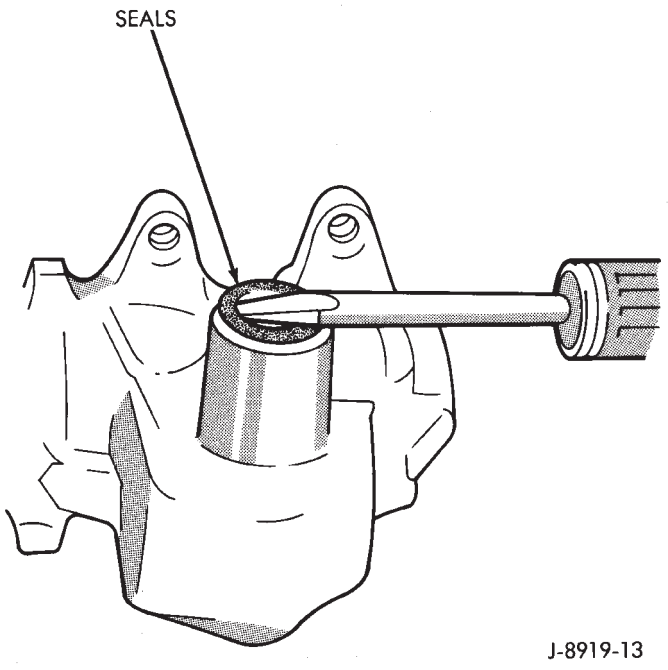

Fig. 3 Shaft Seal Removal

(3) Hold the ball nut over a cloth. Remove the remaining recirculating balls by rotating the wormshaft back and forth.

There are a total of 50 recirculating balls within the ball nut and the guides (25 in each circuit).

(4) Remove the wormshaft from the ball nut (Fig. 2).

CLEANING AND INSPECTION

(1) Clean all the components in a cleaning solvent and dry them with a clean cloth and/or compressed air.

(2) Inspect each component for wear, scoring, cracks, nicks and surface pitting. Replace as necessary.

WORMSHAFT AND BALL NUT ASSEMBLY

CAUTION: The ball nut teeth are wider and deeper on one side than on the other.

(1) Position the ball nut with the recirculating ball guide holes facing upward and the ball nut teeth facing downward. Install the wormshaft in the ball nut. Rotate the shaft and thread it into the nut until an equal number of shaft threads are visible at each end of the nut (Fig. 4).

(2) Install one recirculating ball in each ball guide hole. Move the wormshaft up/down and side-to-side until the balls roll into the ball nut threads at the bottom of wormshaft and support the wormshaft.

(3) Assemble and install the ball guides in the ball nut (Fig. 5).

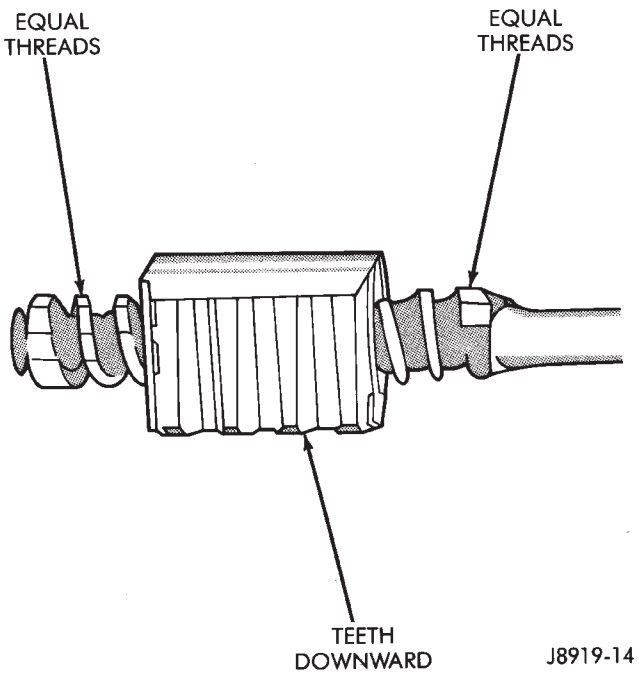

Fig. 4 Wormshaft & Ball Nut

(4) Divide the remaining 48 recirculating balls into two groups and install 24 balls in each ball nut circuit. Insert the balls in the ball nut circuits through the holes in the ball guides (Fig. 5).

To aid the recirculating ball installation, rotate wormshaft back and forth slightly while inserting the balls.

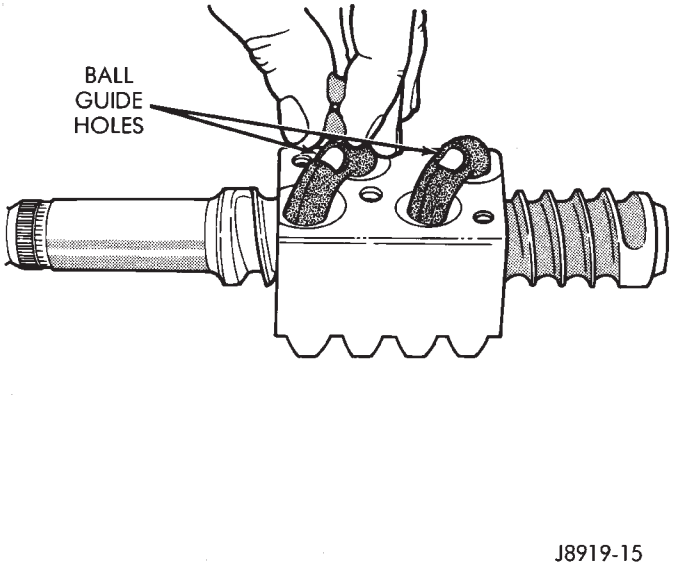

Fig. 5 Recirculating Ball Installation

(5) Place the ball guide clamp on the ball nut and install the clamp retaining screws. Tighten the screws to 14 N·m (10 ft. lbs.) torque.

CAUTION: To avoid damaging the tangs on the ball guide ends, do not allow the wormshaft to travel to the end of the thread in either direction.

(6) Lubricate the wormshaft threads with chassis lubricant. Rotate the shaft to move it in and out of the ball nut and distribute the lubricant.

(7) Lubricate the wormshaft upper bearing with chassis lubricant and install it on the wormshaft.

WORMSHAFT BEARING ADJUSTMENT CAP DISASSEMBLY

(1) Pry out and remove the wormshaft lower bearing retainer from the adjustment cap (Fig. 6).

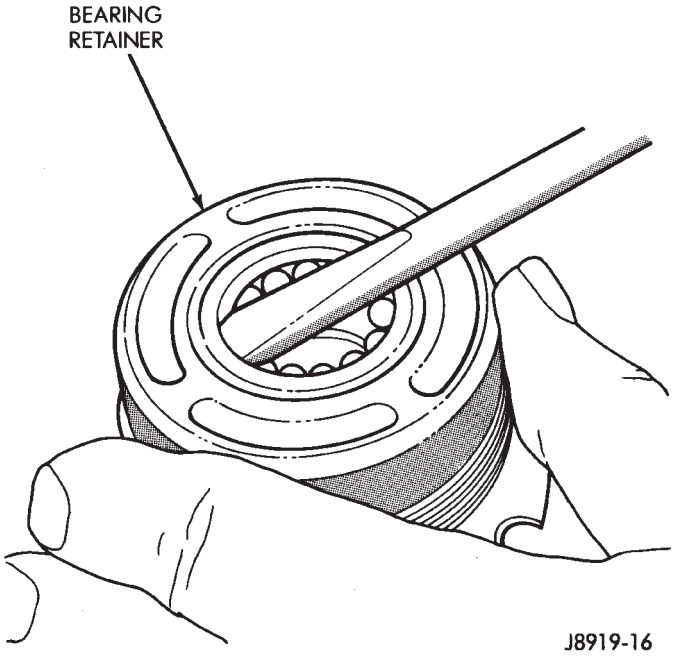

Fig. 6 Wormshaft Lower Bearing Retainer Removal

(2) Remove the wormshaft lower bearing from the adjustment cap.

CLEANING/INSPECTION

(1) Clean all the components in cleaning solvent and dry with a clean cloth only.

(2) Inspect each component for wear and damage. Replace as necessary.

WORMSHAFT BEARING ADJUSTMENT CAP ASSEMBLY

(1) Remove the lower bearing cup Remover 7837 and Slide Hammer C-637 (Fig. 7). Install a new bearing cup in the cap with a correct sized socket (Fig. 8).

(2) Lubricate the wormshaft lower bearing and place it in the bearing cup.

(3) Install the lower bearing retainer on the adjustment cap. If necessary, tap the retainer lightly with a plastic mallet to seat it.

GEAR CLEANING AND INSPECTION

(1) Clean the housing and the pitman shaft with cleaning solvent and dry them with a clean cloth and/or compressed air.

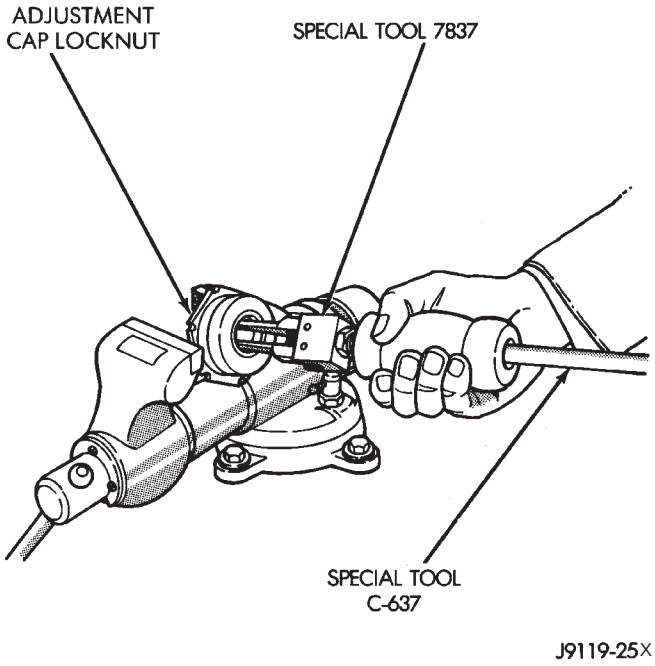

Fig. 7 Bearing Cup Removal

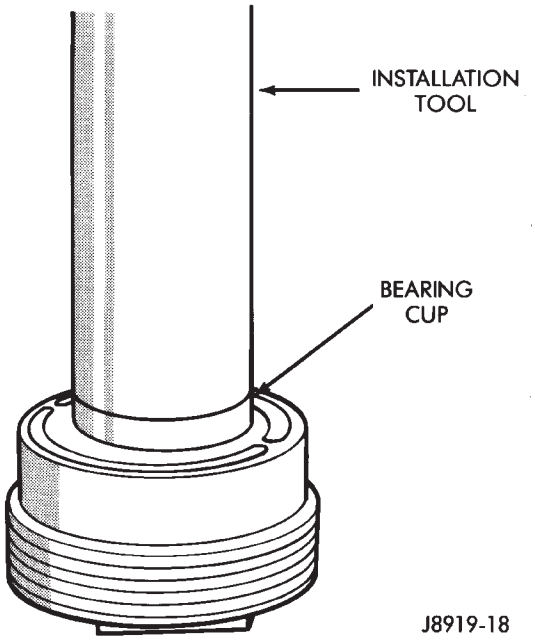

Fig. 8 Bearing Cup Installation

(2) Inspect the housing for cracks, porosity, damaged threads and scoring/distortion of the gasket surface area. Repair or replace as necessary.

(3) Inspect the pitman shaft contact surface and the teeth for wear, pitting, and other damage. Replace as necessary.

(4) Insert the pitman shaft in the steering gear housing shaft bore and inspect for excessive shaft or housing shaft bore wear. The shaft should have a smooth, bind-free fit with no visible side play when installed in the shaft bore.

(5) If the shaft fit is loose but it is not visibly worn, trial fit a replacement pitman shaft in the housing shaft bore. If the replacement shaft also has a loose fit, replace the housing. However, if the replacement pitman fits properly, replace the original pitman shaft.

(6) Measure the pitman shaft adjustment screw fit and end-play in the T-slot (Fig. 9). When installed, the adjustment screw must rotate freely and not bind in any position. Measure the end-play by inserting a feeler gauge between the screw head and the T-slot surface. **The end-play must not exceed 0.05 mm (0.002 in). If end-play exceeds the specified limit, install a replacement shim to reduce the end-play.**

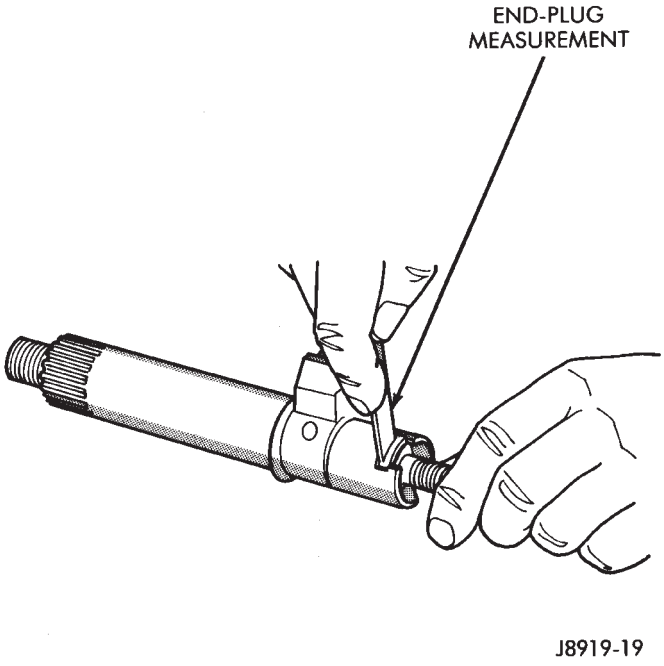

Fig. 9 Adjustment Screw End-Play Measurement

(7) Inspect the wormshaft shaft upper bearing and bearing cup for wear, looseness, flat spots, pitting, cracks, and other damage. If either the bearing or the bearing cup is damaged, both components must be replaced.

(8) If the cup fits loosely in the housing, trial fit a replacement cup. If the replacement cup also fits loosely, replace the housing. If the replacement cup fits properly, replace only the original bearing cup.

GEAR ASSEMBLY

(1) Remove wormshaft upper bearing cup with a hammer and a brass punch (Fig. 10).

(2) Install a replacement bearing cup with an appropriate installation tool (Fig. 11).

Do not install the wormshaft or the pitman shaft seals at this time.

(3) Lubricate all the components with chassis lubricant.

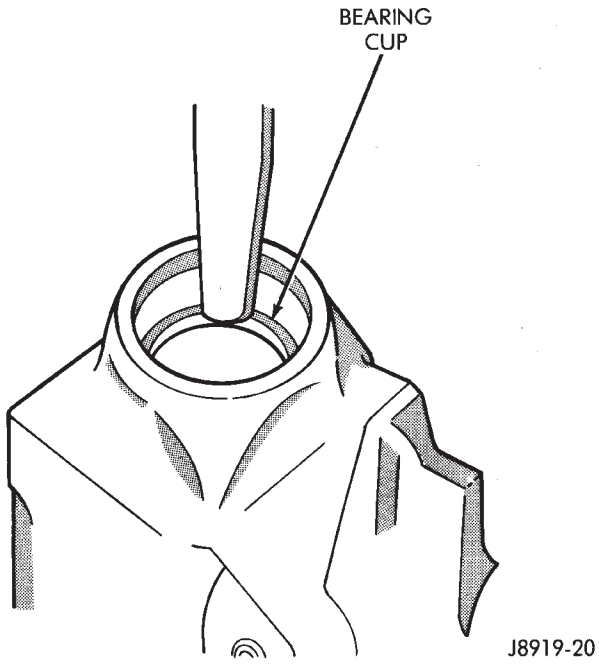

Fig. 10 Wormshaft Upper Bearing Cup Removal

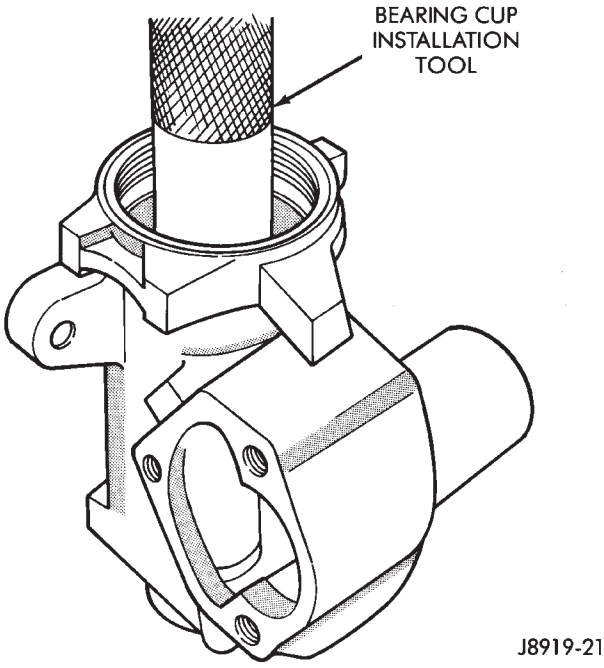

Fig. 11 Wormshaft Upper Bearing Cup Installation

(4) Place the steering gear housing in a vise. Clamp the vise jaws on the housing mounting bosses only.

(5) Install the wormshaft and ball nut in the steering gear housing.

CAUTION: Ensure that the ball nut is installed with the wide/deep side of the ball nut teeth facing toward the cover opening.

(6) Install the wormshaft bearing adjustment cap in the housing and tighten it only enough to remove the wormshaft end-play.

(7) Install the locknut on the wormshaft bearing adjustment cap but do not tighten it at this time.

(8) Pack the steering gear housing with as much chassis lubricant as possible.

Rotate the wormshaft in one direction until the ball nut ceases. Pack the end of the housing full of lubricant, rotate the shaft in the opposite direction and repeat the packing procedure.

(9) Place the ball nut (Fig. 12) in the centered position, rotate the wormshaft from stop-to-stop and count the number of rotations. Rotate wormshaft in the reverse direction 1/2 of the number of rotations to center the ball nut.

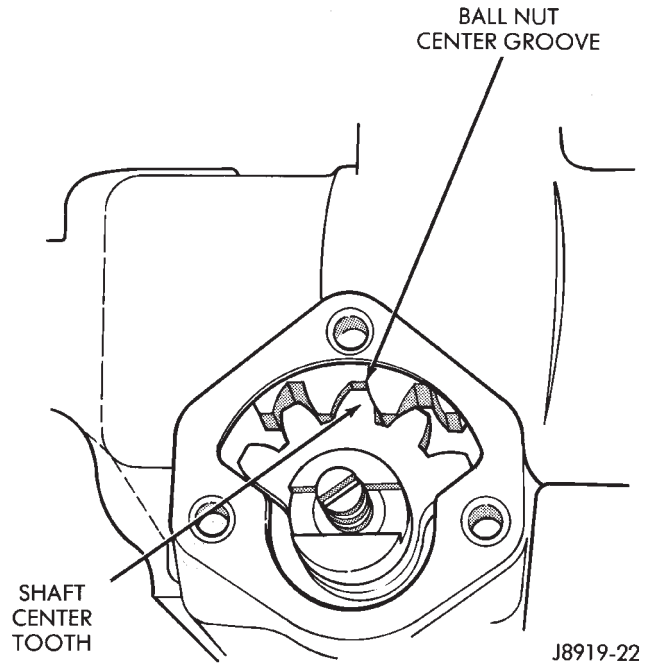

Fig. 12 Pitman Shaft & Ball Nut Engagement

(10) Lubricate the pitman shaft with chassis lubricant and insert it in the steering gear housing. Engage the center tooth on the shaft with the center groove on the ball nut.

(11) Apply chassis lubricant to the replacement housing cover gasket. Position it so that it surrounds the housing cover opening.

(12) Place the shim(s) on the adjustment screw and thread the screw into the cover to a depth of 2 to 3 threads.

(13) Slide the head of the adjustment screw into the pitman shaft T-slot. With the cover in place, rotate the screw counterclockwise to thread it into the cover. Rotate the screw until the cover almost comes in contact with the gasket.

(14) Install the cover retaining bolts finger tight only. Continue tightening the adjustment screw counterclockwise until cover is tight against the gasket, then loosen the screw 1/2 rotation.

(15) Tighten the cover bolts to 61 N·m (45 ft. lbs.) torque.

(16) Install the pitman shaft seal, refer to the replacement procedure.

(17) Rotate the wormshaft and observe the steering gear operation. With the adjustment screw and cap loose, the wormshaft should rotate freely and not bind. If the steering gear binds, repair as necessary.

(18) Inspect for lubricant leakage from the shaft seals. If there is a leak at either seal, replace the defective seal(s).

GEAR ADJUSTMENTS ON BENCH

WORM BEARING PRELOAD

(1) Tighten the worm bearing adjuster plug until it bottoms, then loosen 1/4 turn.

(2) Carefully turn the wormshaft all the way to the end of travel, then turn back 1/2 turn.

(3) Tighten adjuster plug until torque wrench indicates 0.6 to 1.0 N·m (5 to 8 in. lbs.) torque (Fig. 13).

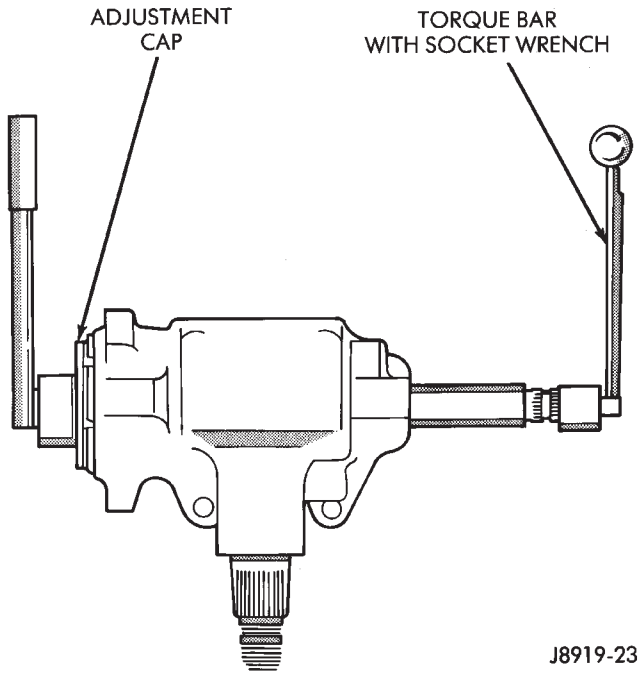

Fig. 13 Worm Bearing Preload Adjustment

(4) Tighten the adjuster plug locknut to 68 N·m (50 ft. lbs.) torque.

OVER-CENTER PRELOAD

(1) Back off preload adjuster until it stops, then turn it in one full turn.

(2) With gear at center of travel, check torque to turn stub shaft. This will be reading #1 (Fig. 14).

(3) Turn adjuster in until torque to turn stub shaft is 0.5 to 1 N·m (4 to 10 in. lbs.) more than reading #1.

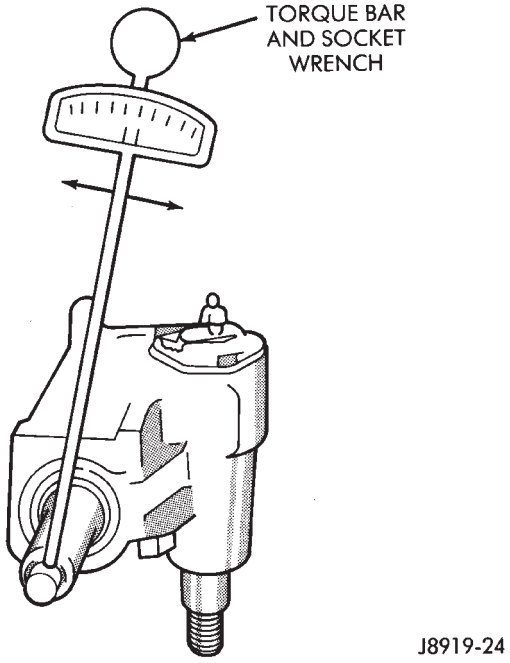

Fig. 14 Over-center Adjustment

(4) Hold pitman shaft adjustment screw and tighten adjuster lock nut to 34 N·m (25 ft. lbs.) torque.

INTERMEDIATE (COUPLER) SHAFT

REMOVAL

(1) Place the front wheels in the straight ahead position.

(2) Remove the shaft pinch bolt at the steering gear and column (Fig. 15, 16). Un-bolt steering gear from frame rail to remove shaft. Refer to Steering Gear Replacement in this section.

INSTALLATION

(1) Align the intermediate (coupler) shaft to the steering gear and column.

(2) Position the steering gear on the frame. Refer to Steering Gear Replacement in this section.

(3) Install and tighten the pinch bolts to 34 N·m (25 ft. lbs.) torque.

STEERING GEAR REPLACEMENT

REMOVAL

(1) Place the front wheels in the straight ahead position with the steering wheel centered.

(2) Remove the column coupler shaft from the gear. Refer to the removal procedures in this section.

(3) Remove pitman arm from gear. Refer to Pitman Arm Removal in the Steering Linkage section.

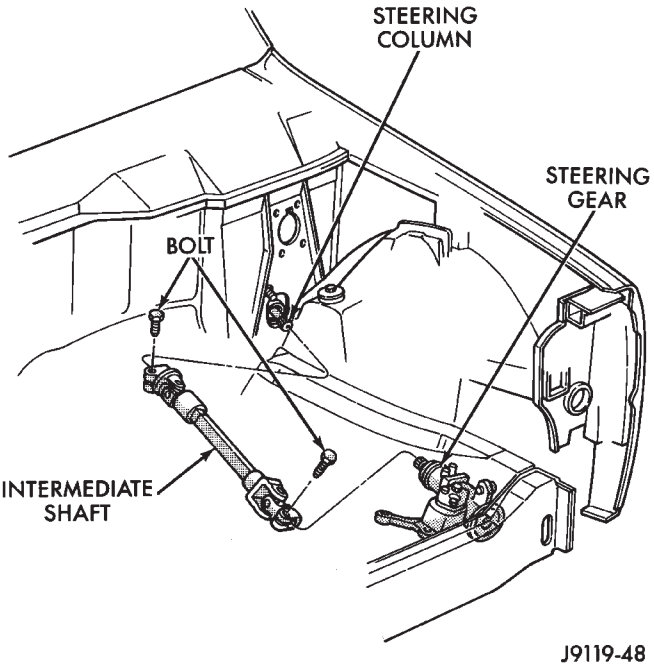

Fig. 15 Coupler Shaft—XJ

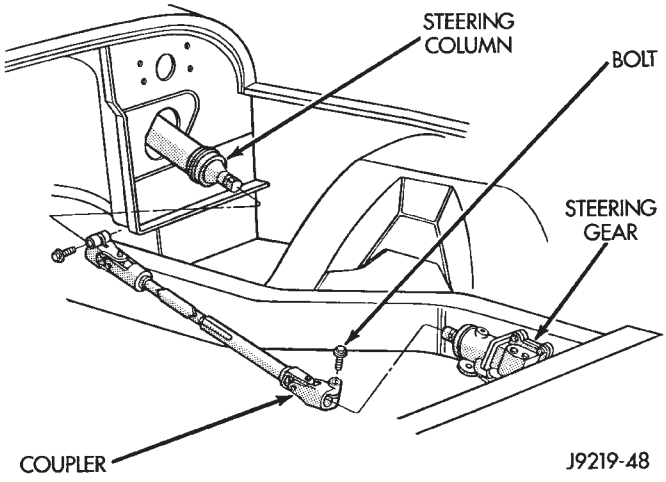

Fig. 16 Coupler Shaft—YJ

(4) Remove the steering gear retaining bolts and nuts. Remove the steering gear from the vehicle (Fig. 17, 18).

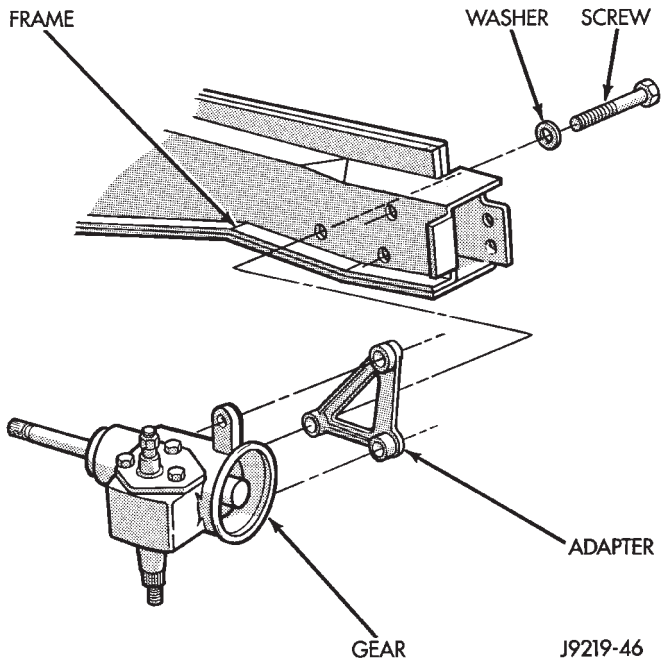

Fig. 17 Steering Gear Mounting—XJ

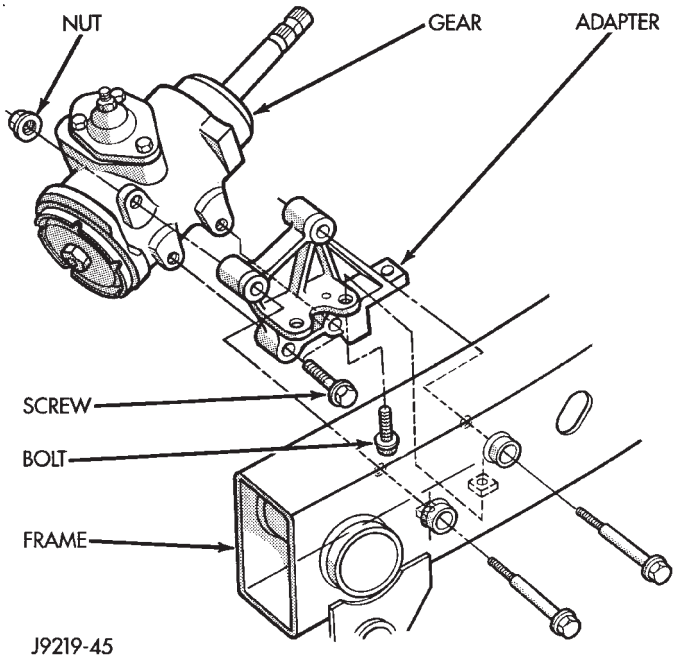

Fig. 18 Steering Gear Mounting—YJ

INSTALLATION

(1) Align the column coupler shaft to steering gear. Refer to Column Coupler installation in this section.

(2) Position the steering gear (and bracket) on the frame rail and install the bolts.

- XJ—Tighten the bolts to 95 N·m (70 ft. lbs.) torque.
- YJ—Tighten the bolts to 105 N·m (78 ft. lbs.) torque.

(3) Align and install the pitman arm. Refer to Pitman Arm Installation in the Steering Linkage section.

MANUAL STEERING GEAR SPECIFICATIONS

Wormshaft Bearing Preload Torque	0.6-0.9 N•m (5 to 8 in-lbs)
Pitman Shaft Overcenter Drag Torque	0.5-1 N•m (4 to 10 in-lbs) (in addition to above)
Maximum Steering Gear Torque	2 N•m (18 in-lbs) total (maximum)
Steering Gear Lubricant	Multi-purpose chassis grease
Steering Gear Ratio	24:1
Steering Gear Type	Recirculating Ball

J9019-2

STEERING COLUMN GENERAL SERVICE—XJ

INDEX

page

Airbag System 47

AIRBAG SYSTEM

WARNING: THE MECHANICAL AIRBAG SYSTEM IS A SENSITIVE, COMPLEX MECHANICAL UNIT. BEFORE ATTEMPTING TO REMOVE OR INSTALL THE AIRBAG SYSTEM OR RELATED STEERING WHEEL AND STEERING COLUMN COMPONENTS YOU MUST FIRST DISARM THE AIRBAG FIRING MECHANISM. FAILURE TO DO SO COULD RESULT IN ACCIDENTAL DEPLOYMENT AND POSSIBLE INJURY.

WARNING: THE AIRBAG MODULE INFLATOR/SENSOR ASSEMBLY CONTAINS SODIUM AZIDE AND POTASSIUM NITRATE. THESE MATERIALS ARE POISONOUS AND EXTREMELY FLAMMABLE. CONTACT WITH ACID, WATER OR HEAVY METALS MAY PRODUCE HARMFUL AND IRRITATING GASES (SODIUM HYDROXIDE IS FORMED IN THE PRESENCE OF MOISTURE) OR COMBUSTIBLE COMPOUNDS.

DO NOT ATTEMPT TO DISMANTLE THE MODULE OR TAMPER WITH ITS ARMING LEVER. DO NOT PUNCTURE, INCINERATE, OR BRING INTO CONTACT WITH ELECTRICITY. DO NOT STORE AT TEMPERATURES EXCEEDING 200°F.

WARNING: REPLACE AIRBAG SYSTEM COMPONENTS WITH PARTS SPECIFIED IN THE CHRYSLER MOPAR PARTS CATALOG ONLY. IT IS OF PARTICULAR IMPORTANCE THAT ANY COMPONENTS USED IN THIS MECHANICALLY-FIRED AIRBAG SYSTEM NOT BE MIXED WITH COMPONENTS FROM AN ELECTRICALLY-FIRED AIRBAG SYSTEM. SUBSTITUTE PARTS MAY APPEAR THE SAME, BUT INTERNAL DIFFERENCES MAY RESULT IN INFERIOR OCCUPANT PROTECTION.

WARNING: THE FASTENERS, SCREWS, AND BOLTS, ORIGINALLY USED FOR THE AIRBAG COMPONENTS, HAVE SPECIAL COATINGS AND ARE SPECIFICALLY DESIGNED FOR THE AIRBAG SYSTEM. THEY MUST NEVER BE REPLACED WITH ANY SUBSTITUTES. ANYTIME A NEW FASTENER IS NEEDED, REPLACE WITH THE CORRECT FASTENERS PROVIDED IN THE SERVICE PACKAGE OR SPECIFIED IN THE CHRYSLER MOPAR PARTS CATALOG.

GENERAL INFORMATION

The airbag system is a standard equipment safety device on XJ (Cherokee) models. It is designed to protect the driver from serious injury, caused by a frontal impact of the vehicle. If the airbag module assembly is defective and non-deployed, refer to Chrysler Corporation current return list for proper handling procedures.

ARMING/DISARMING MECHANISM

BEFORE SERVICING A COLUMN EQUIPPED WITH AIR BAG, REFER TO GROUP 8M, ELECTRICAL FOR PROPER AND SAFE PROCEDURES.

The steering wheel hub incorporates an airbag Arming/Disarming mechanism and a specially designed nut-blocker. The nut-blocker serves as a safety to prevent removal of the airbag module until the unit has been disarmed. A removable plastic cover plug on the top, outer hub of the steering wheel allows access to the arming screw.

When the airbag module is disarmed, the arming screw extends upward from the steering wheel hub. This will prevent installation of the plastic cover plug. Also, the nut-blocker is retracted to allow access to the two upper airbag module mounting nuts.

When the airbag module is armed, the plastic cover plug will install flush with the outer surface of the steering wheel hub. In addition, the nut-blocker will prevent access to the two upper airbag module mounting nuts.

THE FASTENERS, SCREWS, AND BOLTS, ORIGINALLY USED FOR THE AIR BAG COMPONENTS, HAVE SPECIAL COATINGS. THIS HARDWARE IS SPECIFICALLY DESIGNED FOR THE AIR BAG SYSTEM. THEY MUST NEVER BE REPLACED WITH ANY SUBSTITUTES. REPLACE WITH THE CORRECT FASTENERS PROVIDED IN THE SERVICE PACKAGE OR FASTENERS IN THE PARTS BOOK.

The Acustar columns (Fig. 1) have been designed to be serviced as an assembly; less wiring, switches, shrouds, steering wheel, etc. Most steering column components can be serviced without removing the column from the vehicle. For additional information on electrical components refer to Group 8, Electrical.

CAUTION: Bumping, jolting and hammering on the steering column shaft must be avoided during all service procedures.

CAUTION: Disconnect negative (ground) cable from the battery before servicing any component on the column.

Safety goggles should be worn at all times when involved with steering column service.

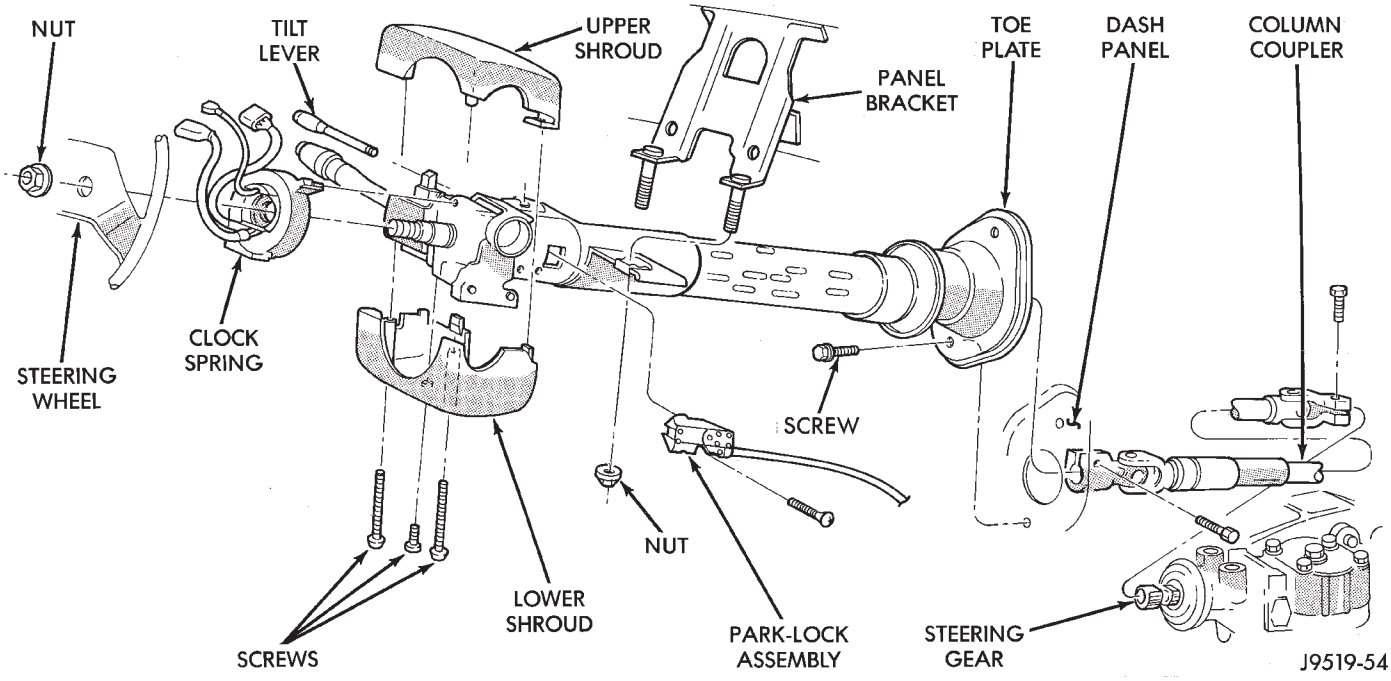

Fig. 1 Acustar Steering Column

AIRBAG MODULE REMOVE—INSTALL

WARNING: THIS AIRBAG SYSTEM IS A SENSITIVE, COMPLEX MECHANICAL UNIT. BEFORE ATTEMPTING TO REMOVE OR INSTALL THE AIRBAG SYSTEM OR RELATED STEERING WHEEL AND STEERING COLUMN COMPONENTS YOU MUST FIRST DISARM THE AIRBAG FIRING MECHANISM. FAILURE TO DO SO COULD RESULT IN ACCIDENTAL DEPLOYMENT AND POSSIBLE PERSONAL INJURY.

When removing a deployed airbag module, rubber gloves, eye protection and long-sleeved shirt should be worn. There may be deposits on the airbag module and other interior surfaces, which can cause irritation to the skin and eyes in large doses.

(1) Disconnect battery negative cable and isolate.

(2) Using a small screwdriver, remove plastic cover plug from top outer surface of steering wheel hub (Fig 2). Exit vehicle and disarm airbag by reaching through driver's side window and turning arming screw counter-clockwise to its travel limit (Fig 3 and 4). This is done using an 8mm socket and manual drive. DO NOT USE POWER-DRIVEN TOOLS.

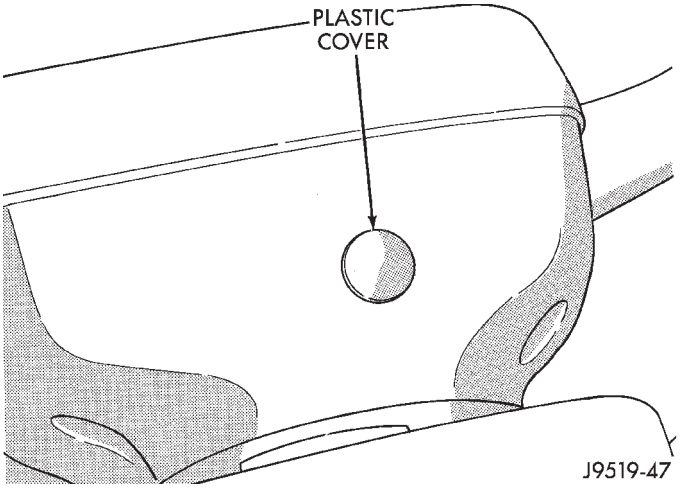

Fig. 2 Plastic Cover Plug for Airbag Arming/ Disarming Bolt

(3) From back side of steering wheel, remove 4 nuts attaching airbag module to steering wheel (Fig. 5). This is done using a 10mm socket and manual drive. DO NOT USE POWER-DRIVEN TOOLS.

(4) Remove airbag module from steering wheel.

(5) Reverse removal procedures to install. Tighten airbag module attaching nuts to 9 to 11 N·m (80 to 100 in. lbs.). Exit vehicle and arm airbag by reaching through driver's side window and turning arming screw clockwise to its travel limit. Arming screw torque should not exceed 1.1 to 1.7 N·m (10-15 in. lbs.). Reinstall plastic cover plug in steering wheel hub.

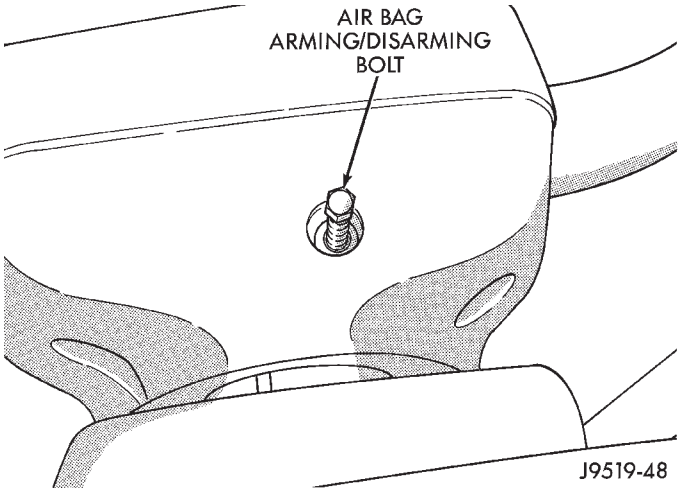

Fig. 3 Arming/Disarming Bolt

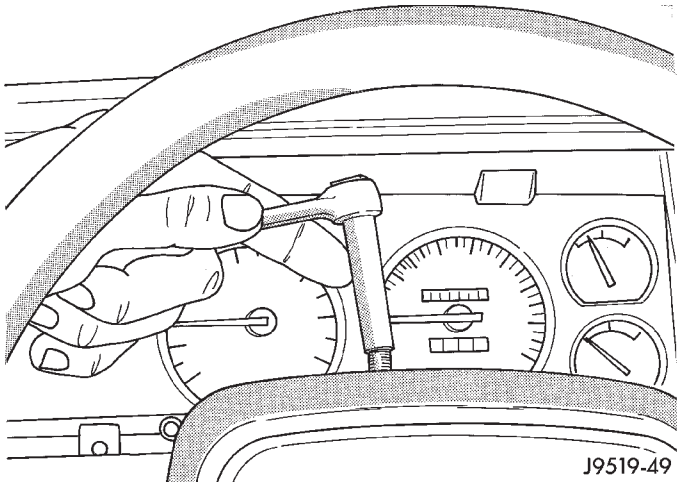

Fig. 4 Airbag Bolt

STEERING WHEEL

WARNING: BEFORE ATTEMPTING TO REMOVE OR INSTALL THE AIRBAG SYSTEM OR RELATED STEERING WHEEL AND STEERING COLUMN COMPONENTS YOU MUST FIRST DISARM THE AIRBAG FIRING MECHANISM. WHEN SERVICING AIR BAG SYSTEM, REMOVE AND ISOLATE THE BATTERY NEGATIVE (-) CABLE (GROUND) FROM THE VEHICLE BATTERY. YOU MUST DISARM THE AIRBAG FIRING MECHANISM. FAILURE TO DO SO COULD RESULT IN ACCIDENTAL AIR BAG DEPLOYMENT AND POSSIBLE INJURY. WHEN AN UNDEPLOYED AIR BAG ASSEMBLY IS TO BE REMOVED FROM THE STEERING WHEEL, DISCONNECT THE BATTERY GROUND CABLE AND ISOLATE. THE ARMING SCREW MUST BE USED TO DISARM THE AIRBAG.

REMOVAL

(1) Make sure the front wheels are in the **straight ahead** position and steering column locked in place.

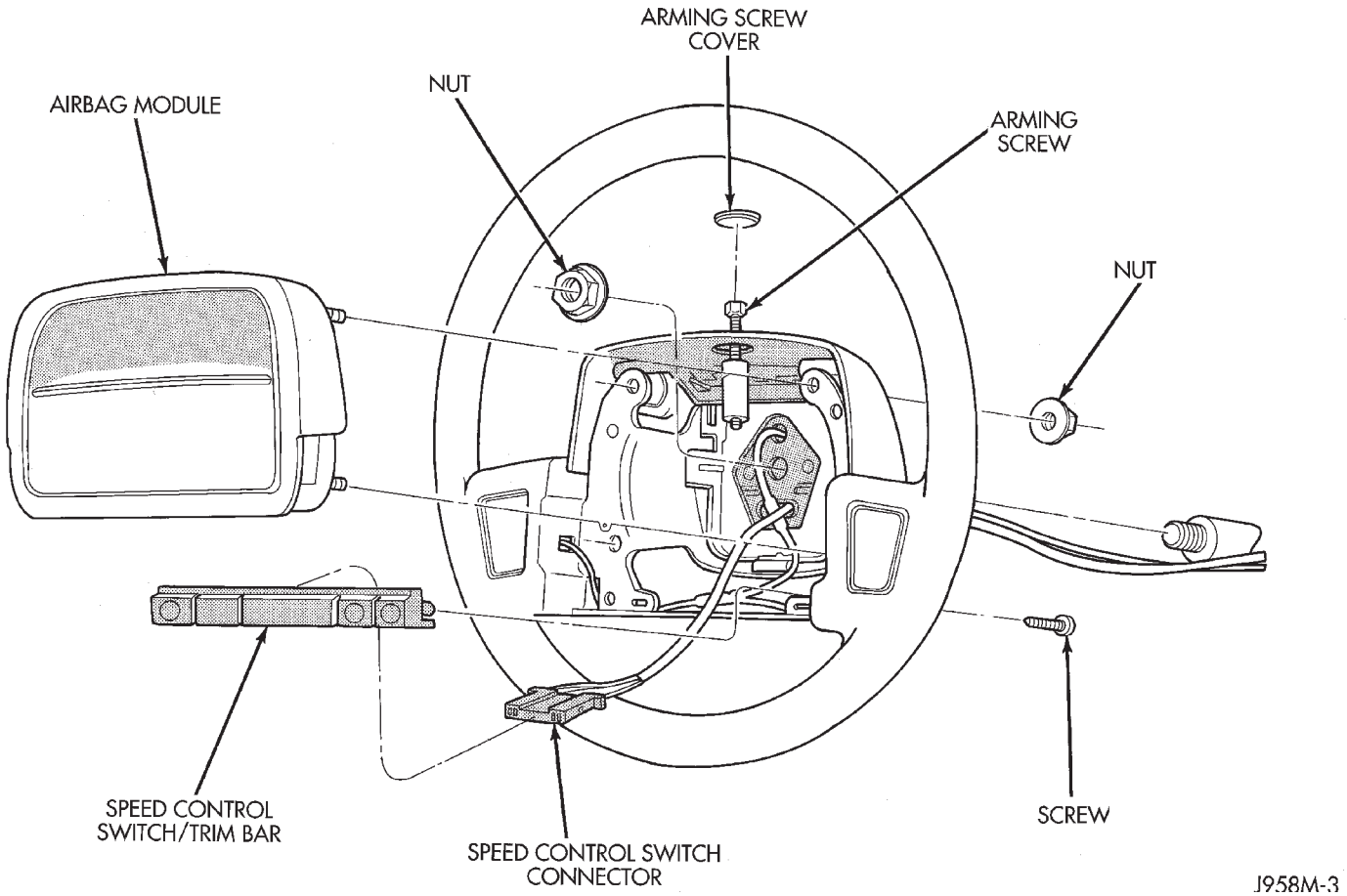

Fig. 5 Airbag Module Remove/Install

(2) Disconnect the battery negative (ground) cable and isolate.

(3) Disarm the airbag (refer to group 8M, Electrical for proper and safe procedures).

(4) Remove the air bag module and speed control switch (if equipped) and disconnect the wire feeds (Fig. 6).

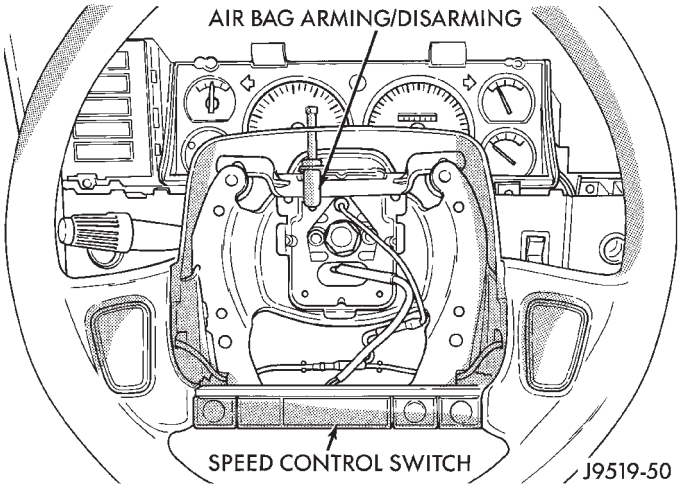

Fig. 6 Air Bag Module and Speed Control

(5) Disconnect the wire feed to the horn buttons.

(6) Remove the steering wheel retaining nut. Score or paint alignment marks on the column shaft and steering wheel (if none exist) for installation reference.

(7) Remove the steering wheel with a universal puller (Fig. 7). **Do not hammer or jolt the steering column or shaft during removal of the wheel.**

INSTALLATION

(1) Install the steering wheel on column with the scored marks or master splines aligned. Ensure the wheel compresses the 2 lock tabs on the clockspring.

(2) Pull the speed control wires through the lower, larger hole in the steering wheel. Pull the horn wire through the smaller hole at the top.

(3) Install the retaining nut and tighten to 61 N·m (45 ft. lbs.) torque. **Force the steering wheel down on the shaft with the retaining nut only. Do not hammer or shock the column with sudden impact to install the wheel.**

(4) Connect the wire feed to the horn buttons.

(5) Connect the wire feeds to the speed control switch (Fig. 6). Tighten the air bag module nuts to 9 to 11 N·m (80 to 100 in. lbs.) torque.

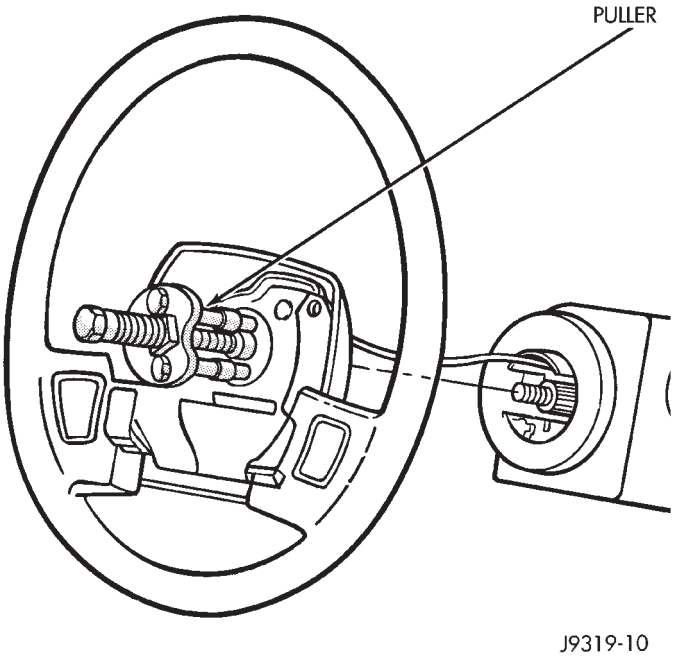

Fig. 7 Steering Wheel Removal

CLOCKSPRING

WARNING: BEFORE SERVICING AIR BAG SYSTEM, REMOVE AND ISOLATE BATTERY NEGATIVE (-) CABLE (GROUND) FROM VEHICLE BATTERY. WHEN AN UNDEPLOYED AIR BAG ASSEMBLY IS TO BE REMOVED FROM THE STEERING WHEEL, DISCONNECT THE BATTERY GROUND CABLE AND ISOLATE.

REMOVAL

(1) Place the front wheels in the straight ahead position before starting the repair.

(2) Disconnect battery negative cable and isolate.

(3) Remove the steering wheel and air bag, refer to Steering Wheel Removal.

(4) Remove upper and lower steering column shrouds to gain access to the clockspring wiring (Fig. 8).

(5) Release wire connector at clockspring.

(6) Pull clockspring assembly from column by lifting locking fingers as necessary. The clockspring cannot be repaired, and must be replaced if faulty.

INSTALLATION

(1) Snap clockspring assembly onto column. If clockspring is not properly positioned, follow the centering procedures before installing steering wheel.

(2) Connect the wire connector to the clockspring.

(3) Install upper and lower steering column shrouds. Be sure wiring is inside of shrouds and not pinched.

(4) Install the steering wheel and air bag module, refer to Steering Wheel Installation.

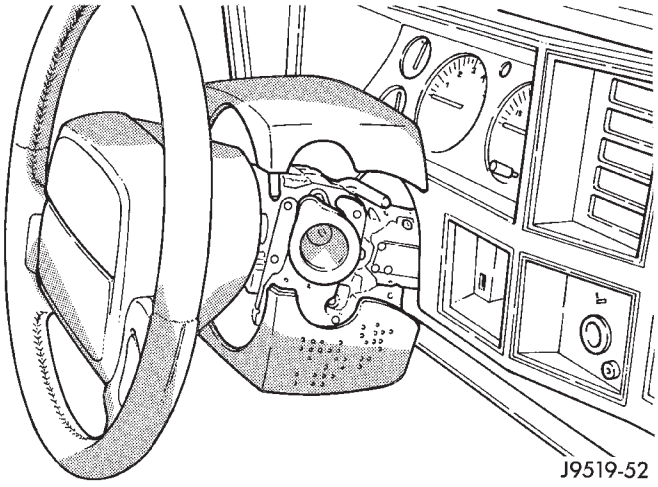

Fig. 8 Upper and Lower Steering Column Shroud

CENTERING PROCEDURE

If the rotating tape within the clockspring is not positioned properly, the clockspring may fail during use. The following procedures MUST BE USED to center the clockspring;

- If it is not known to be properly positioned
- If the front wheels were moved from the straight ahead position

(1) Place the front wheels in the straight ahead position before starting the procedure.

(2) Depress the 2 locking tabs to disengage the locking mechanism (Fig. 9).

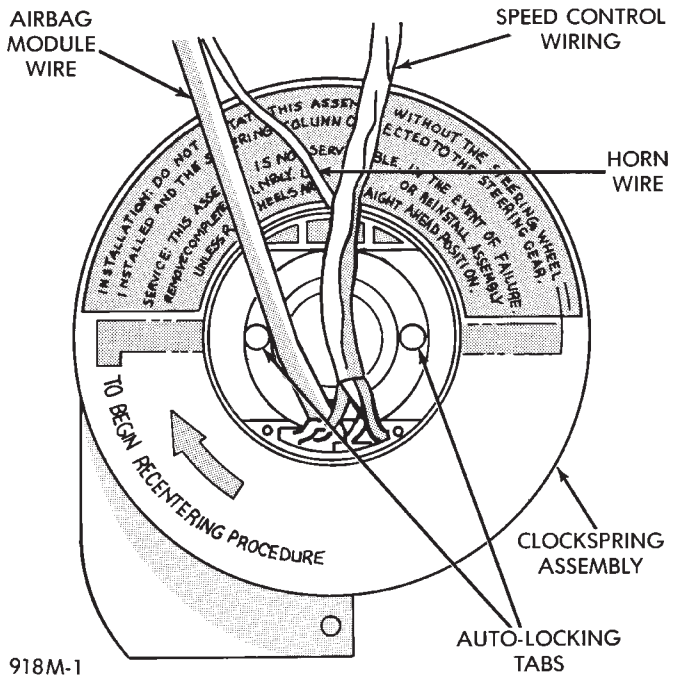

Fig. 9 Clockspring—Auto-Locking

(3) Keeping the mechanism disengaged, rotate the clockspring rotor in the CLOCKWISE DIRECTION to the end of the travel. Do not apply excessive torque.

(4) From the end of travel, rotate the rotor 2 1/2 full turns in the COUNTER CLOCKWISE direction. The horn wire should end up at the top and the squib wire at the bottom (Fig. 9).

(5) Install the steering wheel and air bag module, refer to Steering Wheel Installation.

COLUMN ASSEMBLY REPLACEMENT

CAUTION: Bumping, jolting and hammering on the steering column shaft and gear shift tube must be avoided during all service procedures.

REMOVAL

(1) Make sure the front wheels are in the **straight ahead** position.

(2) Observe Cautions and disconnect the negative (ground) cable from the battery.

(3) Disarm airbag, refer to Arming/Disarming Airbag in this section.

(4) Remove column coupler upper pinch bolt (Fig. 10).

(5) Remove steering wheel and airbag from column, refer to Steering Wheel-Removal and observe Cautions/Warnings.

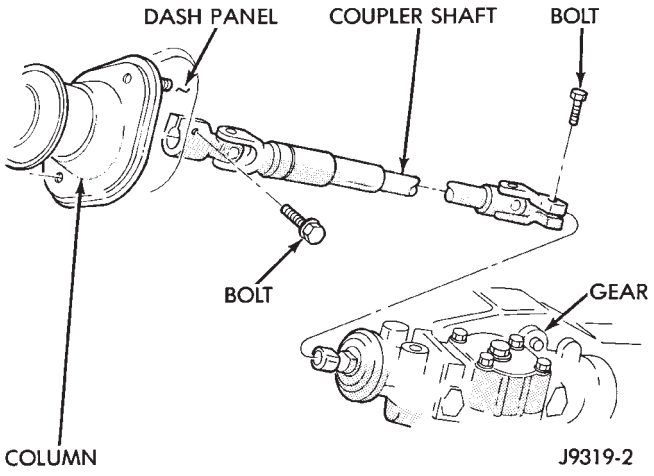

Fig. 10 Column Coupler Shaft

(6) Remove the knee blocker (Fig. 11).

(7) Remove relay box.

(8) Remove tilt lever (if equipped) from column.

(9) Remove the upper and lower steering column shrouds (Fig. 8).

(10) Remove both pencil braces (fig. 12).

(11) Loosen the panel bracket nuts/studs to allow the column to drop.

(12) Remove wiring harness connector (Fig. 15) from the multi function switch. **Note: Wiring harness connector is retained to multi function switch, using an attaching bolt with a 7mm hex head. access to bolt is through rear of wiring harness connector.**

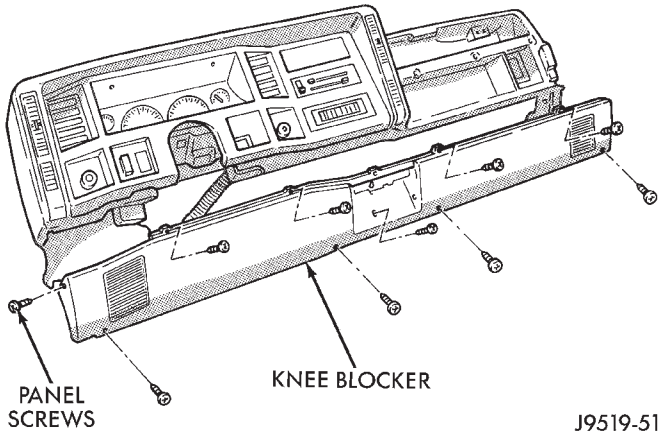

Fig. 11 Knee Blocker

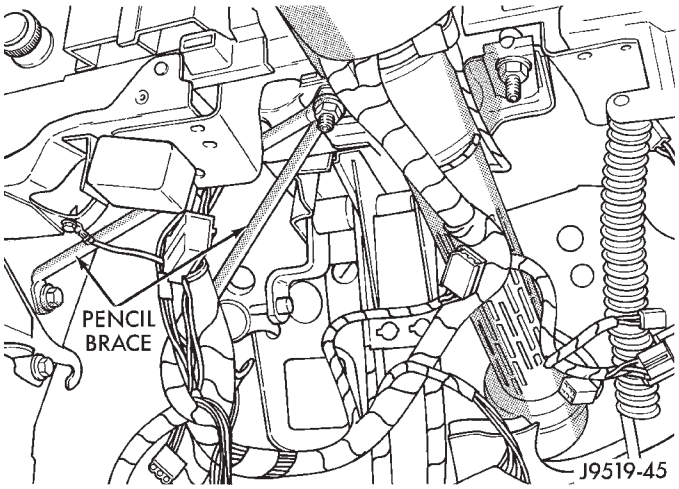

Fig. 12 Steering Column Pencil Braces

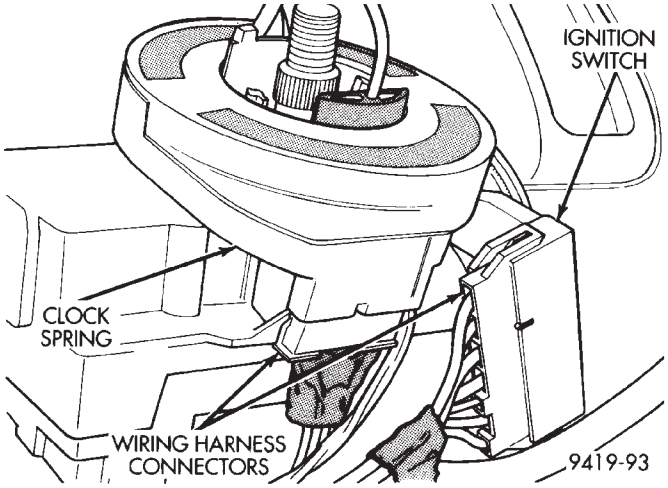

Fig. 13 Clock Spring And Ignition Switch Wiring Connections

(13) Remove the wiring harness from steering column (Fig. 16).

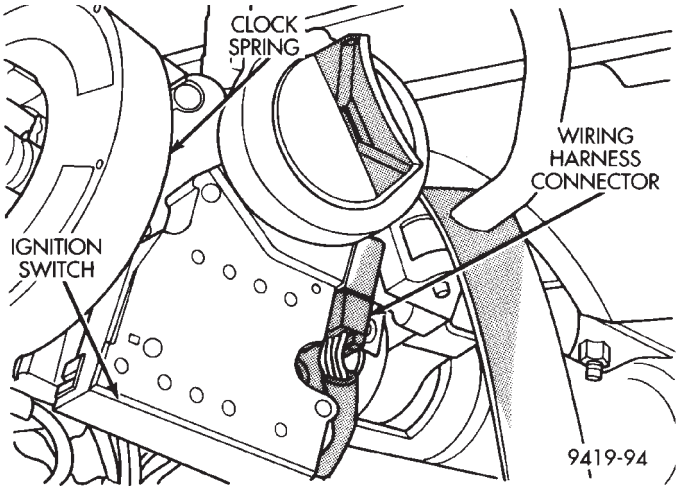

Fig. 14 Halo Light And Key In Buzzer Wiring Connection

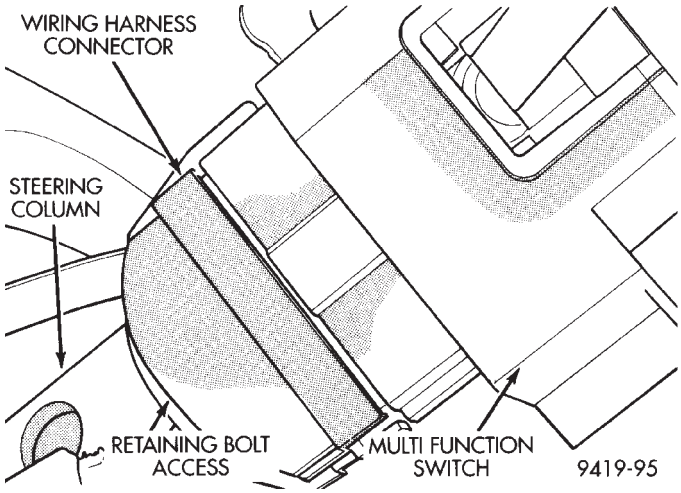

Fig. 15 Multi Function Switch Wiring Connection

(14) Remove the Interlock cable from the steering column. Refer to Automatic Transmission Shifter/Ignition Interlock in this group.

(15) Remove the column. Use care to avoid damaging the paint or trim.

INSTALLATION

CAUTION: Bumping, jolting and hammering on the steering column shaft and gear shift tube must be avoided during all service procedures.

(1) With the front wheels in the straight ahead position. Align and install the column to coupler. **Do not apply force at the top of the steering column shaft.**

(2) Ensure the ground clip is on the left spacer slot (Fig. 17).

(3) Install the Interlock cable from the steering column. Refer to Automatic Transmission Shifter/Ignition Interlock in this group.

(4) Install wiring harness connections to steering column (Fig. 16).**Ensure the wiring is not pinched and all connections are correctly locked in place.**

(5) Install wiring harness connector onto multi function switch (Fig. 18). Torque multi function switch wiring harness connector retaining bolt to 2 N·m (17 in. lbs.).

(6) Install wiring harness connector for key light switch connection, onto the ignition switch (Fig. 19).

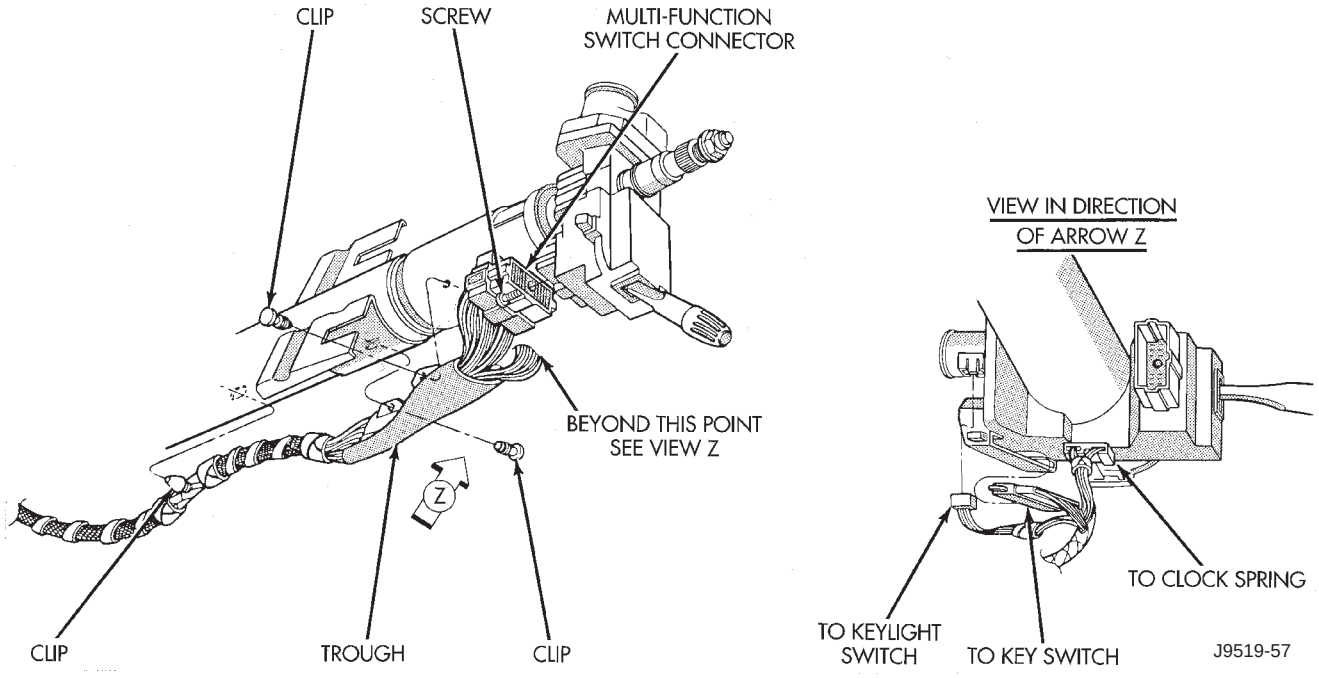

Fig. 16 Steering Column Wiring Harness

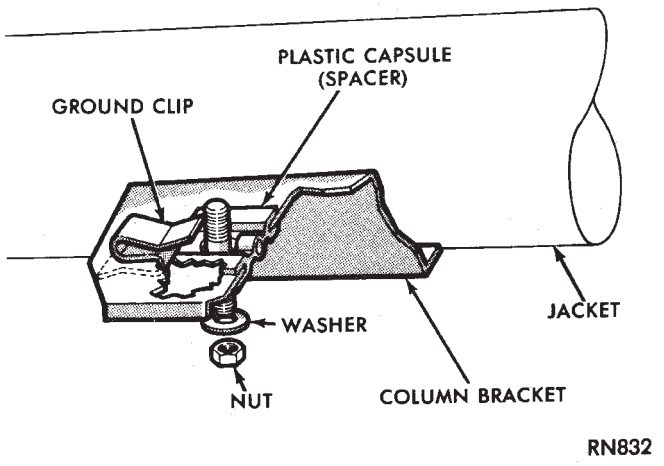

Fig. 17 Ground Clip & Spacer Installation

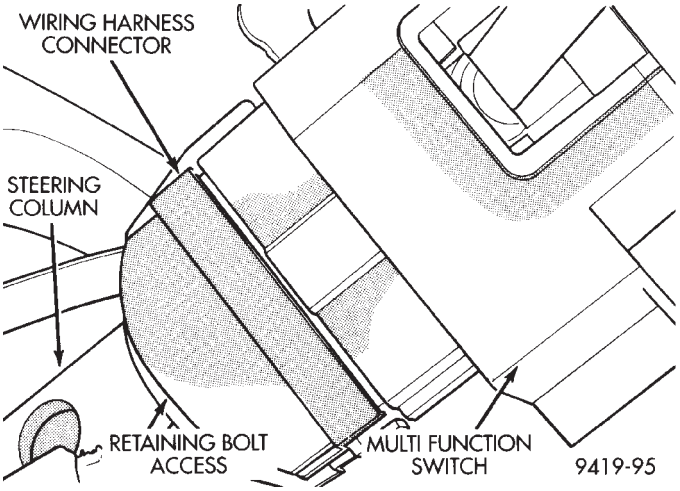

Fig. 18 Multi Function Switch Wiring Harness Connector Installed

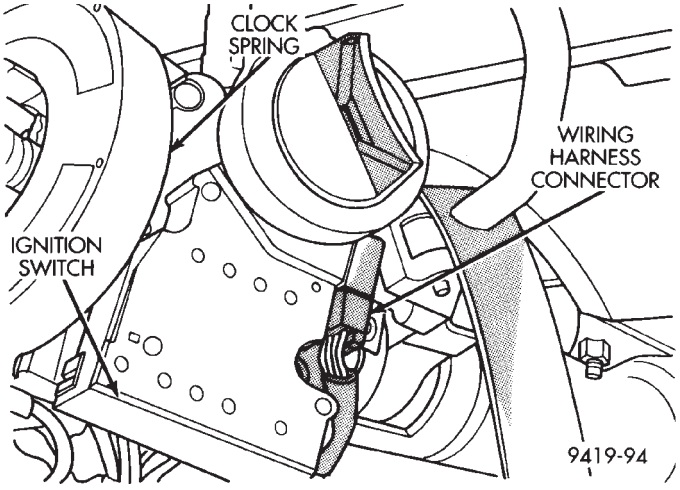

Fig. 19 Wiring Harness Connection For Key Light Switch

(7) Install wiring harness connectors onto clock spring and ignition switch assembly (Fig. 20).

(8) Install shaft coupler pinch bolt loose, load column up to panel bracket.

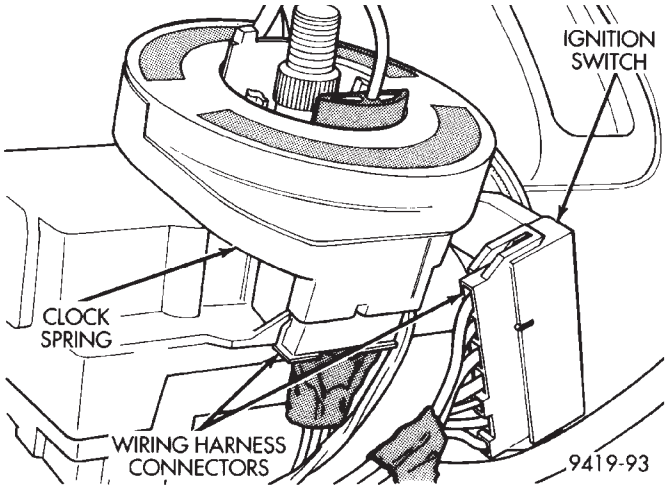

Fig. 20 Wiring Harness Connection To Clock Spring And Ignition Switch

(9) Be sure both spacers are fully seated in the column support bracket. Tighten the column panel bracket support nuts to 12 N·m (105 in. lbs.) torque.

(10) Tighten the coupler pinch bolt to 47 N·m (35 ft. lbs.) torque.

(11) Install the upper and lower shrouds. Install the tilt lever (if equipped).

(12) Install rely box.

(13) Install the knee blocker.

(14) Install the steering wheel, refer to Steering Wheel Installation and observe cautions.

(15) Remove the column shaft shipping lock pin (installed in service column).

(16) Arm airbag, refer to Arming/Disarming Airbag in this section.

(17) Connect the battery ground (negative) cable.

COLUMN COMPONENT SERVICE

The Acustar columns have been designed to be serviced as an assembly; less wiring, switches, shrouds, steering wheel, etc. Also most steering column components can be serviced without removing the column from the vehicle. For additional information on electrical components refer to Group 8, Electrical.

IGNITION SWITCH SERVICE

TEST AND REPAIR

If the ignition switch effort seems to be excessive due to binding. Follow the procedure outlined below to determine the cause.

When service procedures are performed on the Acustar steering column there are certain areas of the column that can not be tampered with. If a problem related to these areas of the steering column are detected. The entire steering column (less the removable components) should be replaced see (Fig. 1 and 2).

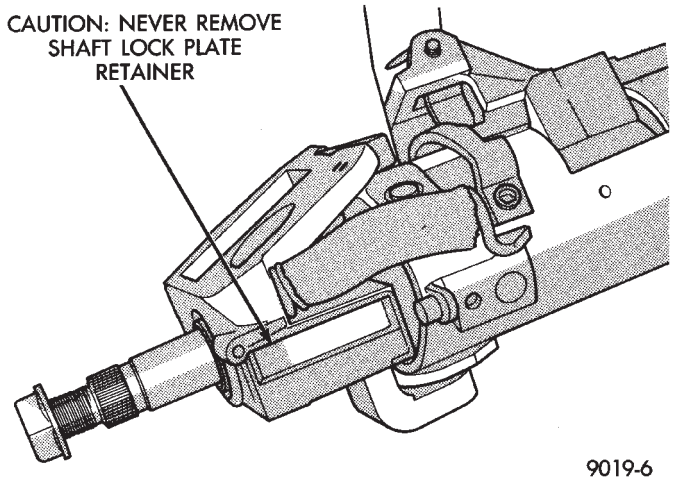

Fig. 1 Steering Column Non-Serviceable Components

(1) Remove the ignition switch from the steering column. Refer to **Group 8D Ignition System.**

(2) Using a key cylinder, check the turning effort of the switch.

• If the ignition switch binds look for the following conditions.

(1) Look for rough areas or flash in the casting and if found remove with a file (Fig. 2).

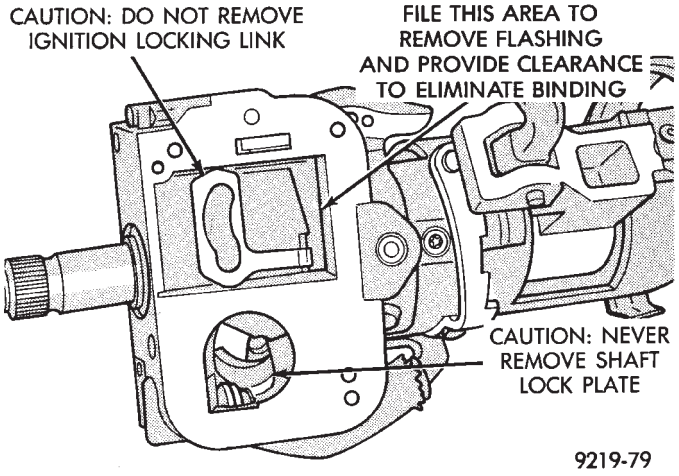

Fig. 2 Steering Column Flash Removal And Non-Serviceable Components

(2) Remove the link and slider.

(3) Check the link to see if it has been bent and if so replace with a new part.

Put the slider in its slot in the sleeve and verify a loose fit over the length of the slot. If the slider binds in the slot at any point lightly file the slider until clearance is achieved.

• If no binding is found.

Lightly file the ramp on the ignition switch, (The ramp fits into the casting) until binding no longer occurs.

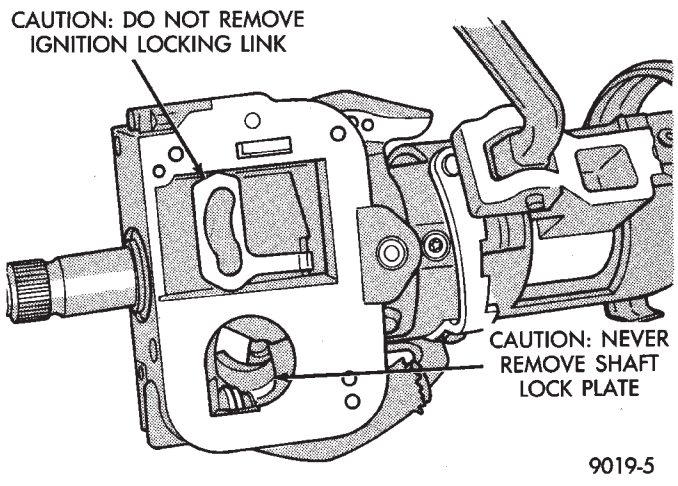

Fig. 3 Observe Cautions

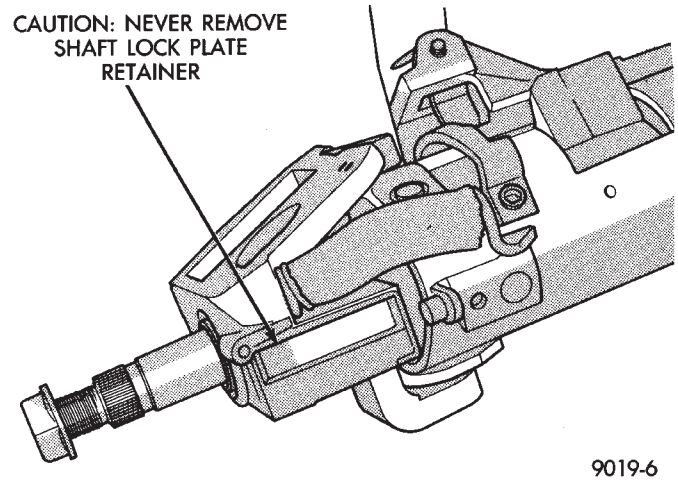

Fig. 4 Observe Cautions

AUTOMATIC TRANSMISSION SHIFTER/IGNITION INTERLOCK MECHANISM

The automatic transmission Shifter/Ignition Interlock, is a cable operated system. It interconnects the automatic transmission floor mounted shifter to the steering column ignition switch (Fig. 1). The system locks the shifter into the PARK position. The Interlock system is engaged whenever the ignition switch is in the LOCK or ACCESSORY position. When the key is in the OFF or RUN position the shifter is unlocked and will move into any position. The interlock system also prevents the ignition switch from being turned to the LOCK or ACCESSORY position (Fig. 2). Unless the shifter is fully locked into the PARK position.

INTERLOCK CABLE REPLACEMENT

REMOVAL

(1) Lower the steering column. Refer to Column Assembly Replacement in this group.

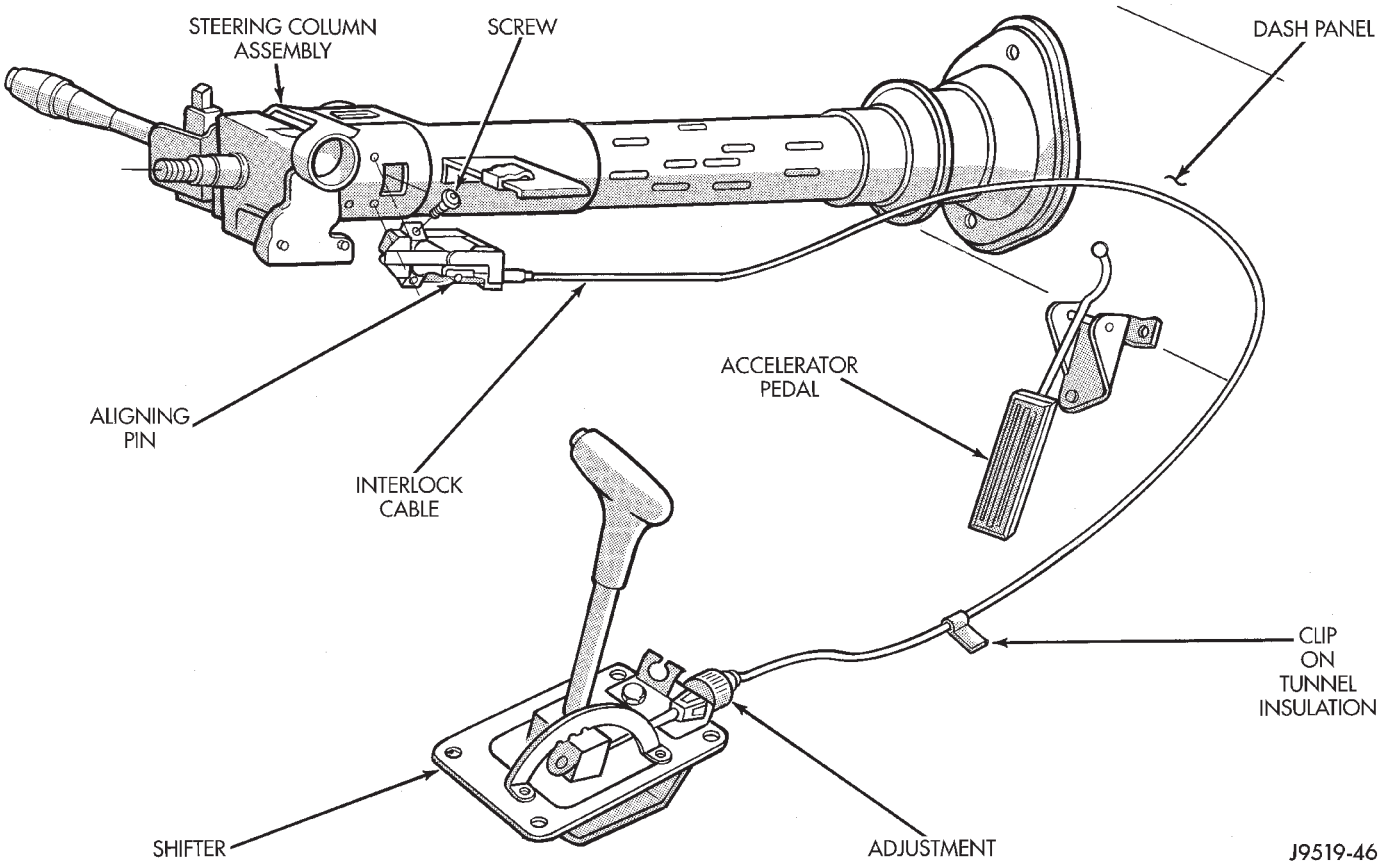

Fig. 1 Ignition Interlock Cable Routing

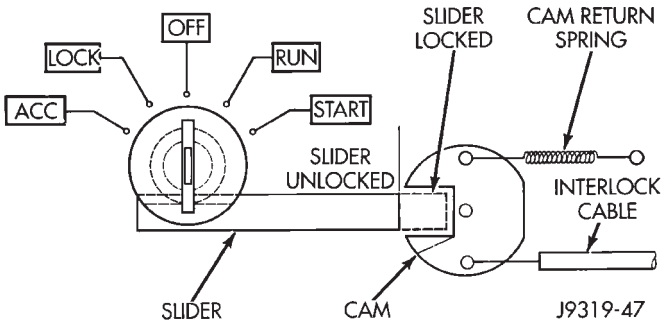

Fig. 2 Ignition Key Cylinder Actuation

(2) Remove two screws retaining the interlock mechanism to the column (Fig. 3). Unsnap the mechanism from column.

(3) Remove the center console and related trim. Refer to Group 23, Body.

(4) Disconnect the cable eyelet from the bellcrank (Fig. 4).

(5) Disconnect and remove the cable from the shift bracket.

(6) Remove the accelerator pedal (the cable routes under the pedal), refer to Group 14, Fuel Systems. Release the cable from the accelerator pedal clip. Move the carpet as necessary to remove the cable.

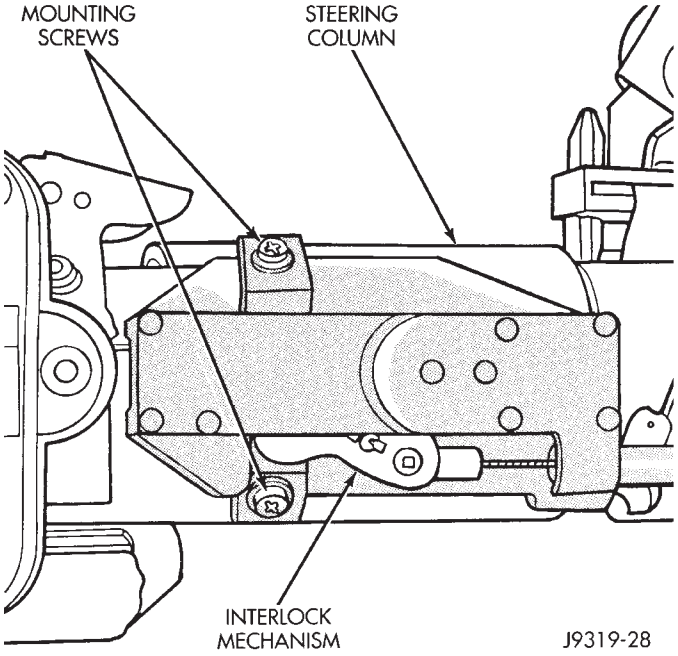

Fig. 3 Interlock Mechanism on Column

INSTALLATION/ADJUSTMENT

(1) Snap the cable base assembly into the large square opening in the steering column (Fig. 4).

(2) Secure the plastic base with two (2) self tapping screws (Fig. 3).

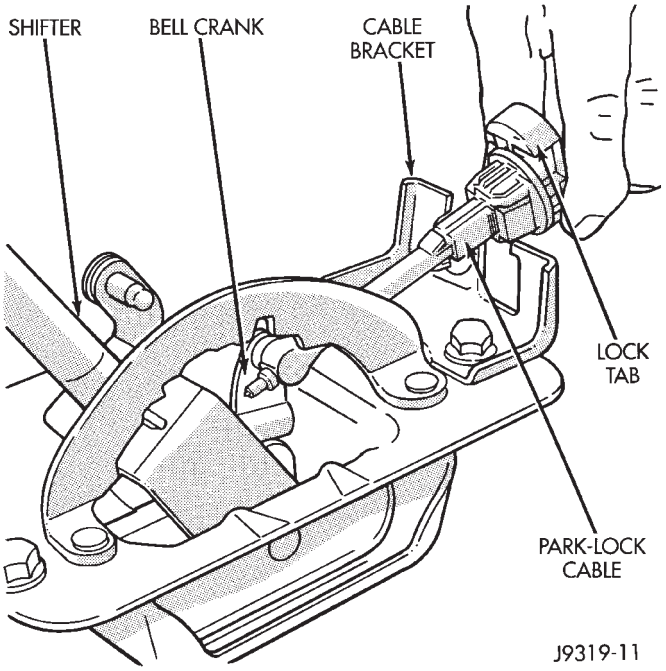

Fig. 4 Cable and Shifter

(3) Place the ignition key cylinder in the ACCESSORY position.

(4) Remove shipping pin from plastic base.

(5) Connect the cable eyelet to the bellcrank pin (Fig. 4).

(6) Place gear selector in PARK.

(7) Push the spring-loaded cable adjuster forward and snap cable into bracket (Fig. 4).

(8) Push the cable adjuster lock clamp downward to lock it.

(9) Install the center console and related trim. Refer to Group 23, Body.

(10) Test the park-lock cable operation.

(11) Load the steering column up to the bracket. Refer to Column Assembly Replacement in this group.

TEST/INSPECTION

(1) Turn the ignition switch key to the LOCK position.

(2) Press inward on the gear selector handle release button, the button should not move.

(3) Turn the ignition switch key to the ON position.

(4) Press inward on the gear selector handle release button.

(5) Move the gear selector handle to the DRIVE or NEUTRAL position.

(6) Attempt to turn the ignition switch key to the LOCK position.

(7) If the park-lock cable is correctly adjusted, the key will not turn to the LOCK position.

(8) Press inward on the gear selector handle release button and move the gear selector handle to the PARK position.

(9) Turn the ignition switch key to the LOCK position. If the park-lock cable is correctly adjusted, the key will turn to the LOCK position.

(10) If additional cable adjustment is required, slide the adjuster forward or rearward to obtain the correct position. Refer to Group 21, Transmission for additional information involving shift cable adjustment.

STEERING COLUMN—YJ

INDEX

	page
Assembly	63
Assembly	71
Column Replacement	58
Disassembly	66
Disassembly—Column or Console Shift	60
Non-Tilt Steering Column	60
Steering Wheel	58
Tilt Steering Column	66

The column may be disassembled and reassembled. Also most steering column components can be serviced without removing the column from the vehicle. For additional information, refer to Group 8H, Electrical.

CAUTION: Bumping, jolting and hammering on the steering column shaft and gear shift tube must be avoided during all service procedures.

CAUTION: Disconnect negative (ground) cable from the battery before servicing any component on the column.

Safety goggles should be worn at all times when involved with steering column service.

STEERING WHEEL

REMOVAL

(1) Make sure the front wheels are in the **straight ahead** position.

(2) Disconnect the negative (ground) cable from the battery.

(3) Remove the horn contact components (Fig. 1).

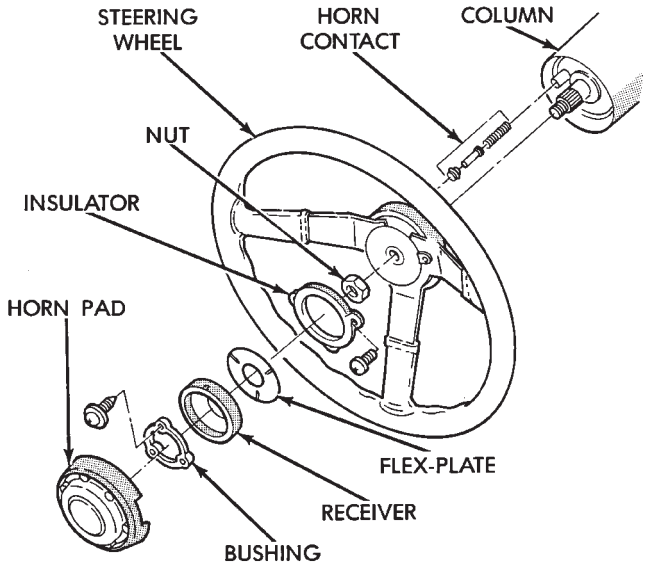

Fig. 1 Horn Pad Removal/Installation

(4) Remove the steering wheel retaining nut and the vibration damper, if equipped. Score or paint alignment marks on the column shaft and steering wheel (if none exist) for installation reference.

(5) Remove the steering wheel with Puller 7591 (Fig. 2).

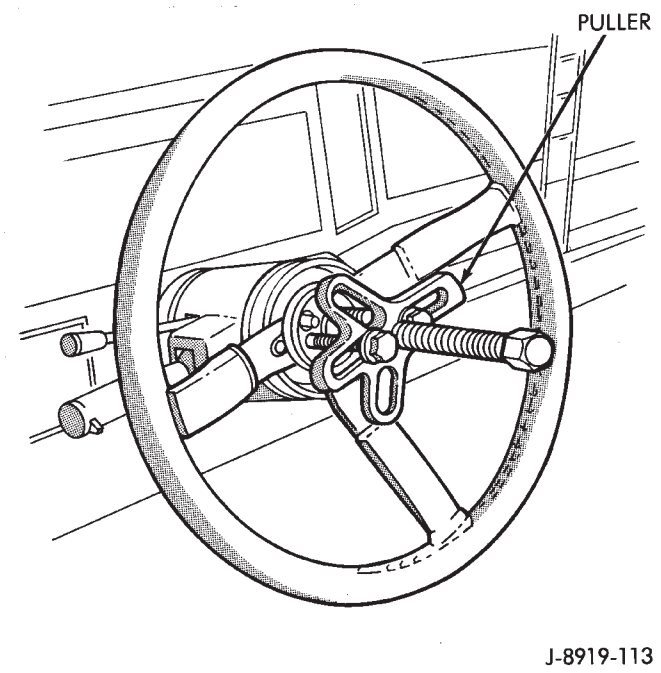

Fig. 2 Steering Wheel Removal

INSTALLATION

(1) Install the steering wheel with the scored or painted marks aligned.

(2) Install the retaining nut and tighten to 34 N·m (25 ft. lbs.) torque. **Force the steering wheel down on the shaft with the retaining nut only.**

(3) Install the horn contact components (Fig. 1).

(4) Connect the battery ground (negative) cable.

COLUMN REPLACEMENT

REMOVAL

CAUTION: Bumping, jolting and hammering on the steering column shaft and gear shift tube must be avoided during all service procedures.

(1) Make sure the front wheels are in the **straight ahead** position.

(2) Disconnect the negative (ground) cable from the battery.

(3) Remove steering wheel from column, refer to Steering Wheel-Removal.

(4) Column shift vehicles, disconnect the shift cable grommet by prying it from the shift lever.

(5) Disconnect the column shaft to steering gear coupler upper bolt (Fig. 3).

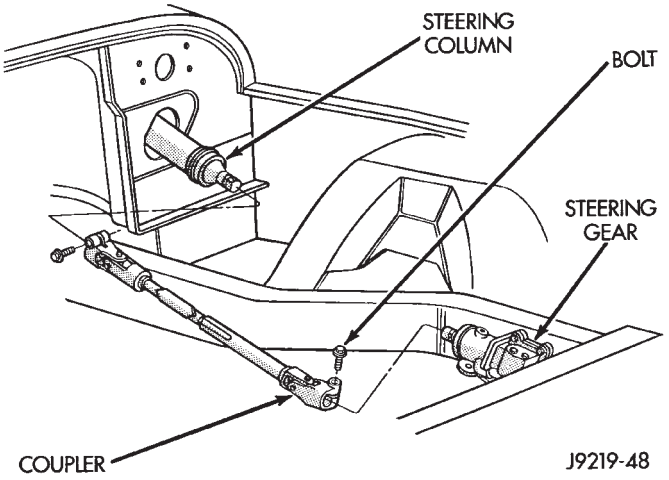

Fig. 3 Column Shaft Coupler

(6) Remove the lower portion of the instrument panel, refer to Group 8E, Instrument Panel.

(7) Remove two nuts holding steering column bracket to brake sled (Fig. 4).

(8) Remove four bolts holding steering column bracket to column.

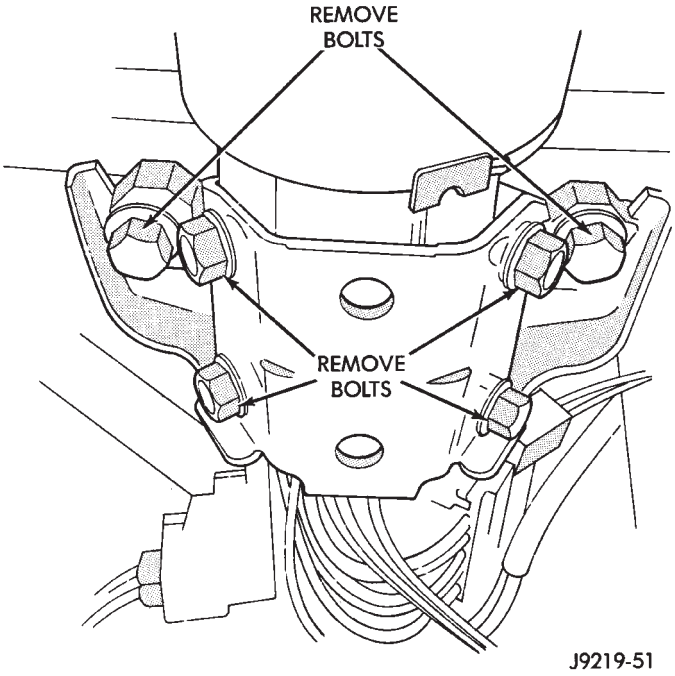

Fig. 4 Column Bracket

(9) Disconnect the following items from the steering column connectors:

- Ignition switch wire harness
- Dimmer switch wire harness
- Turn signal switch wire harness
- Windshield wiper wire harness
- Cruise control wire harness (if equipped)

(10) Remove the bolts that attach the toe plate to the floor pan (Fig. 5).

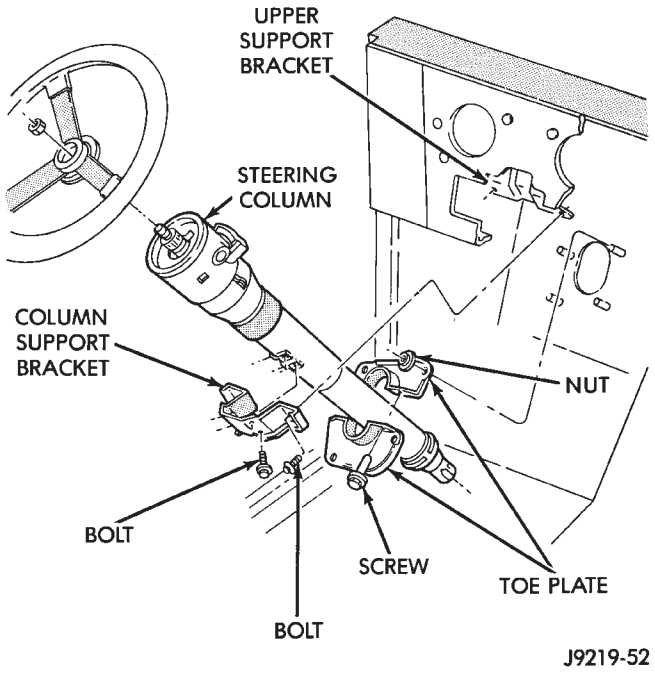

Fig. 5 Steering Column Mounting

(11) Carefully remove column from vehicle.

INSTALLATION

CAUTION: Bumping, jolting and hammering on the steering column shaft and gear shift tube must be avoided during all service procedures.

(1) Carefully position column in vehicle.

(2) Align the column shaft to steering gear coupling. Install and tighten the bolt to 34 N·m (25 ft. lbs.) torque.

(3) As applicable, connect the following items to the steering column connectors:

- Ignition switch wire harness
- Dimmer switch wire harness
- Turn signal switch wire harness
- Windshield wiper wire harness
- Cruise control wire harness (if equipped)

(4) Install the support bracket on the column (Fig. 4) and tighten the bolts to 30 N·m (270 in. lbs.) torque.

(5) Install and tighten the column to brake sled bolts (Fig. 4) to 30 N·m (270 in. lbs.) torque.

(6) Column shift vehicles, install the shift cable grommet on the shift lever.

(7) Install and tighten the toe plate to floor pan bolts/nuts to 21.5 N·m (192 in. lbs.) torque (Fig. 5).

(8) Install the lower portion of the instrument panel, refer to Group 8E, Instrument Panel.

(9) Install steering wheel on column, refer to Steering Wheel-Installation.

(10) Connect the negative (ground) cable to the battery.

NON-TILT STEERING COLUMN

DISASSEMBLY—COLUMN OR CONSOLE SHIFT

Steering column removal from the vehicle is not necessary for;

- Lockplate cover
- Lockplate
- Steering shaft retaining ring
- Canceling cam
- Turn signal switch
- Upper bearing preload spring
- Ignition key/lock cylinder service

The steering column must be removed from the vehicle to service any other component.

(1) If the column is removed for service, fabricate a support fixture to clamp it in a vise (Fig. 1).

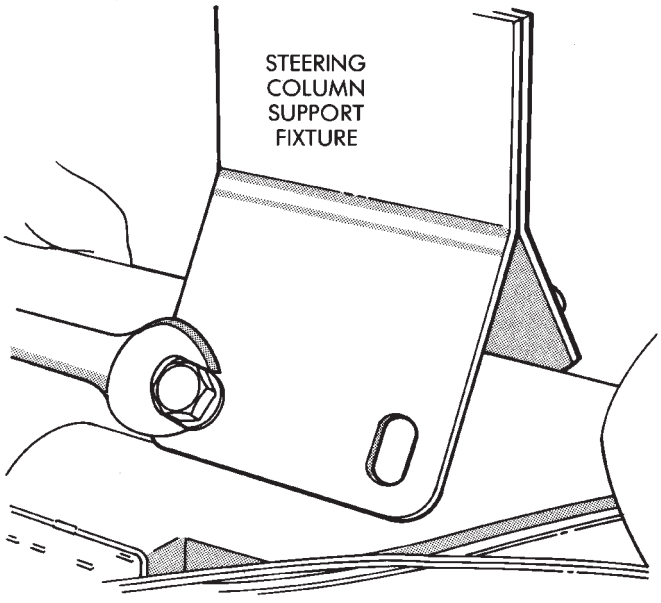

Fig. 1 Steering Column Support Fixture

(2) Remove the steering wheel. Refer to the removal procedure.

(3) Remove the lockplate cover.

WARNING: THE LOCKPLATE RETAINS A VERY STRONG, SPRING FORCE. DO NOT ATTEMPT TO REMOVE THE STEERING SHAFT RETAINING SNAP RING WITHOUT USING LOCKPLATE COMPRESSOR C-4156.

(4) Compress the lockplate with Compressor C-4156 and release the steering shaft retaining snap ring (Fig. 2).

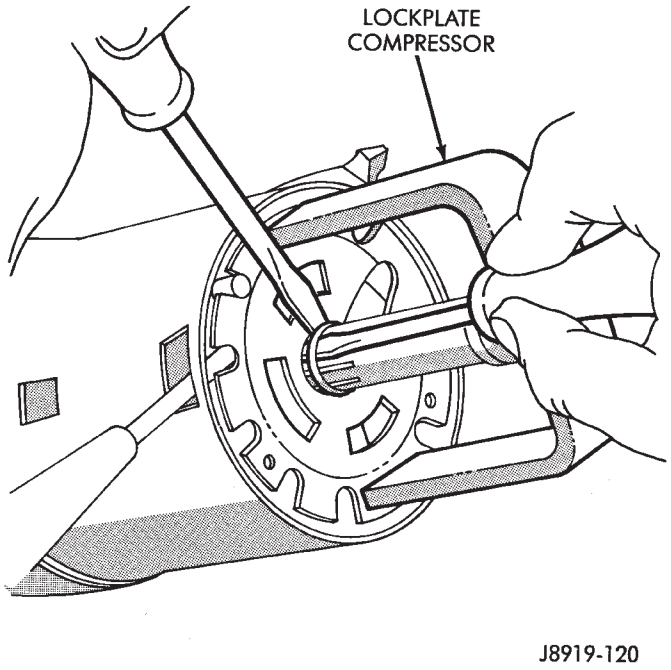

Fig. 2 Retaining Snap Ring Removal

(5) Remove the lockplate compressor tool and the retaining snap ring. Discard the snap ring.

CAUTION: When the steering shaft retaining snap ring is removed, the steering shaft is no longer retained within the column.

(6) Remove the lockplate, canceling cam, upper bearing preload spring, and the thrust washer from the steering column/shaft (Fig. 3).

(7) Remove the hazard warning switch knob. Press the knob inward and remove it from the column by turning it counterclockwise.

(8) Remove the turn signal/wiper/cruise control stalk by pulling it out straight from the column. Wiper must be in the off position.

(9) Disconnect the turn signal wire harness connector from the bracket.

CAUTION: Wrap tape around the turn signal switch wire harness connector (Fig. 4) to prevent it from becoming entangled during removal.

(10) Remove the turn signal switch retaining screws (Fig. 5), dimmer switch actuator arm, to remove the switch. Guide the switch straight up and out of the steering column.

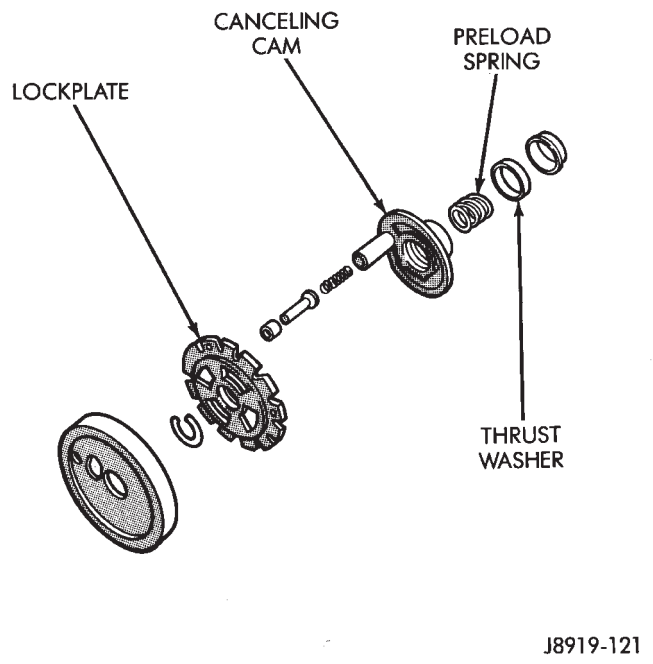

Fig. 3 Steering Column Disassembly

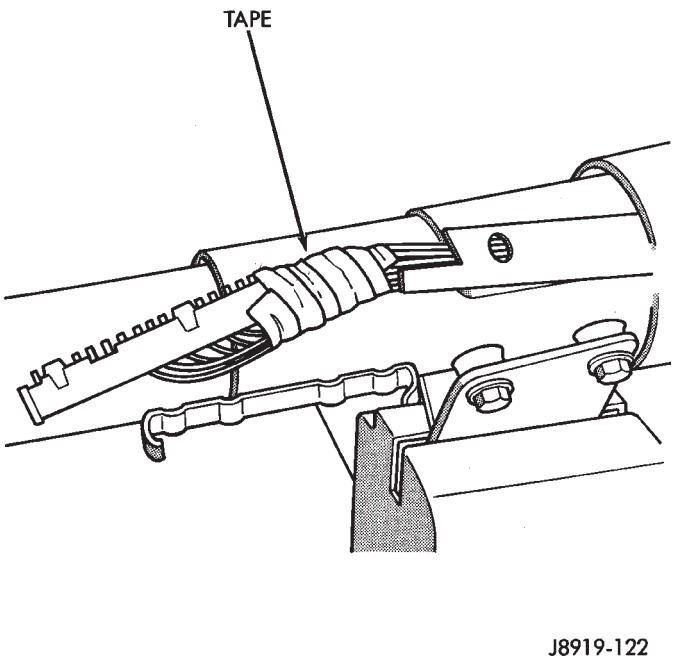

Fig. 4 Taped Turn Signal Switch Wire Harness Connector

(11) Remove the wiper switch wire harness and all the other wire harnesses located within the steering column.

(12) Insert the ignition switch key into the key/lock cylinder and turn to the ON position.

CAUTION: Do not attempt to remove the key warning buzzer switch and contacts separately. If separated, the contacts can detach and drop into the steering column.

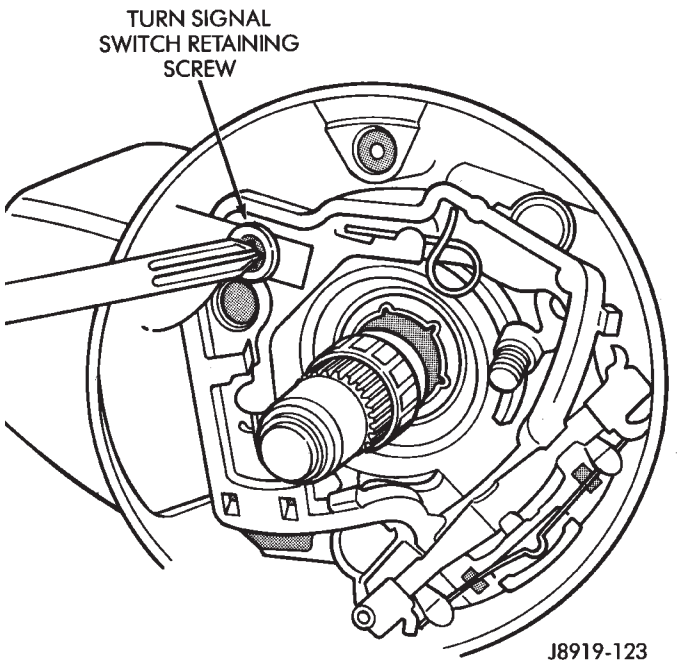

Fig. 5 Turn Signal Switch Retaining Screw

(13) Remove the key warning buzzer switch and contacts as a unit (Fig. 6). Use needle-nose pliers or a paper clip bent at a right angle (90 degrees).

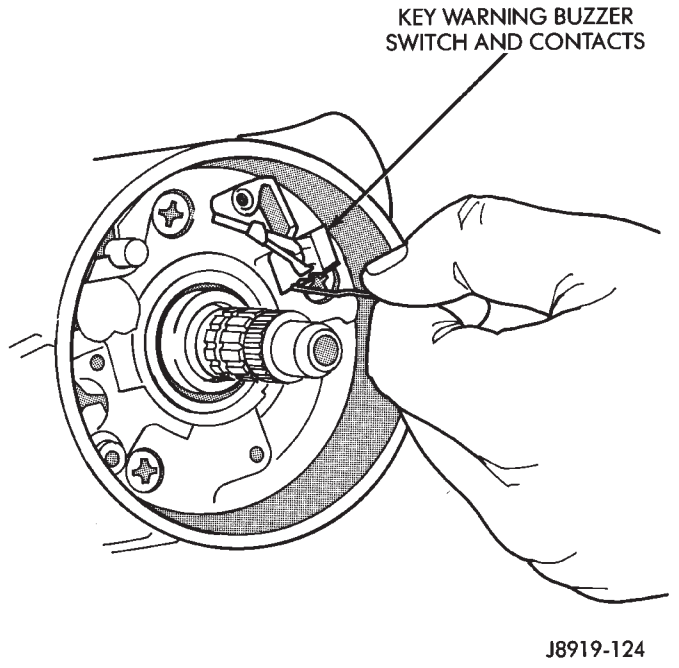

Fig. 6 Key Warning Buzzer/Contacts Removal

(14) Turn ignition key/lock cylinder to the ON position. Insert a thin screwdriver into the slot adjacent to the switch attaching screw boss (right-hand slot). Depress the spring latch located at the bottom of the slot to release the key/lock cylinder. Remove the key/lock cylinder. (Fig. 7).

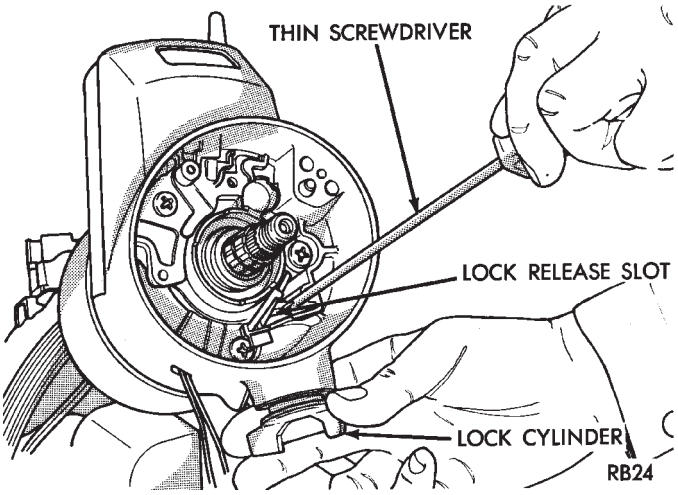

Fig. 7 Key/lock Cylinder Removal

(15) Remove the ignition switch and the dimmer switch (Fig. 8) from the lower end of the steering column.

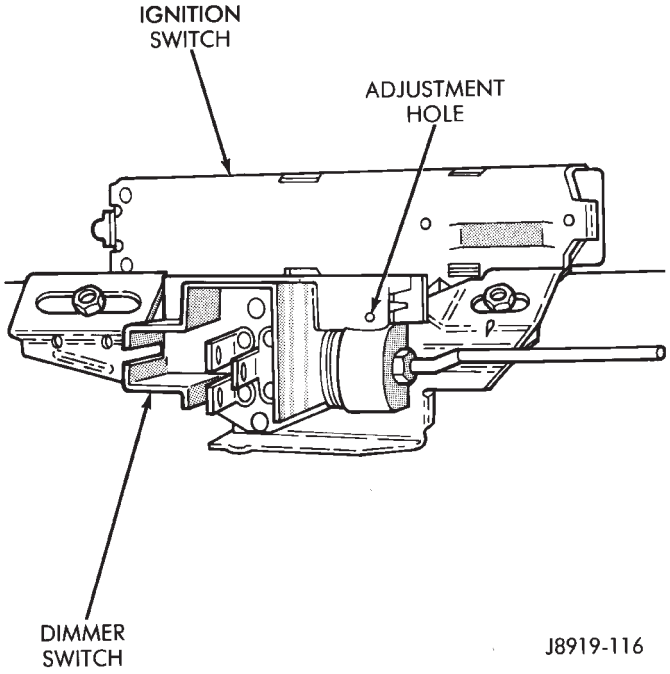

Fig. 8 Ignition Switch & Dimmer Switch

Proceed to Column Shift Disassembly Procedure or Console Shift Disassembly Procedure.

COLUMN SHIFT DISASSEMBLY

(1) Remove the gear selector lever upper pivot pin and the selector lever.

(2) Remove the upper bearing thrust washer.

(3) Remove the four screws that attach the key/lock cylinder housing to the steering column jacket. Remove the housing (Fig. 9).

(4) Remove the thrust cap from the key/lock cylinder housing (Fig. 10).

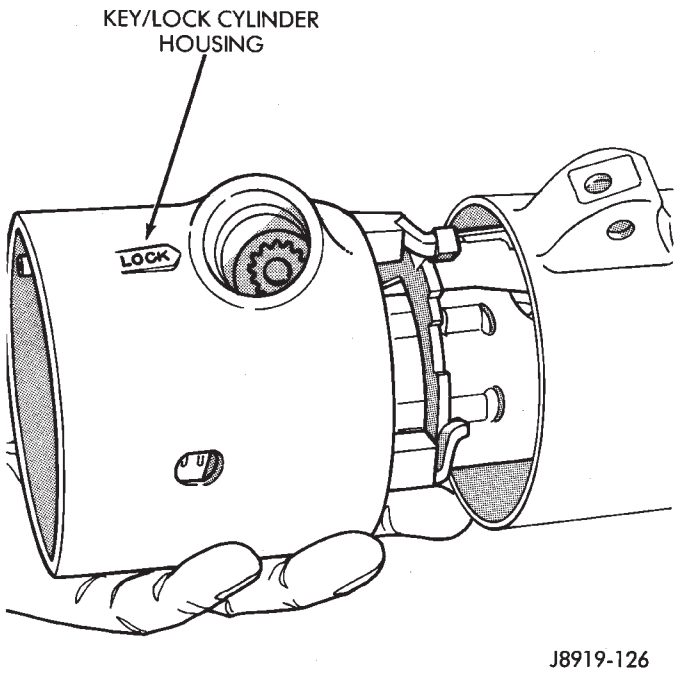

Fig. 9 Key/Lock Cylinder Housing

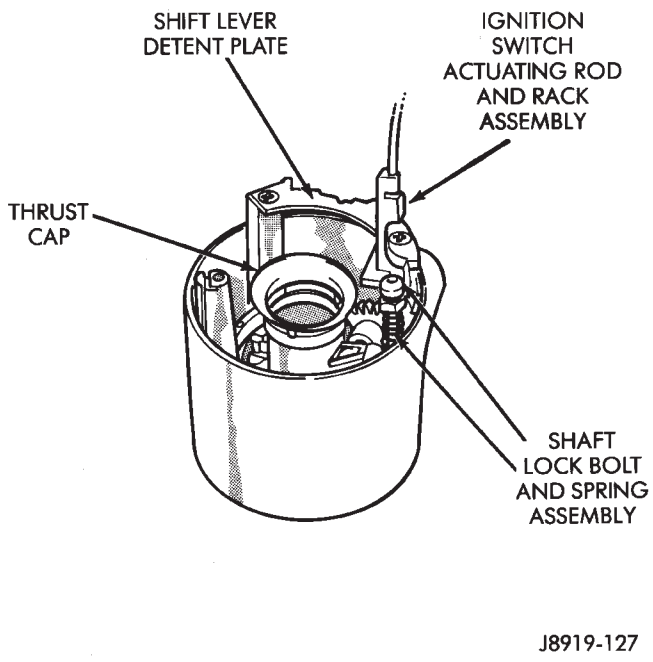

Fig. 10 Key/Lock Cylinder Housing Components

(5) Remove the ignition switch actuating rod and rack from the key/lock cylinder housing (Fig. 10).

(6) Remove the rack preload spring and the shaft lock bolt and spring from the key/lock cylinder housing. Remove the shift lever detent plate from the housing (Fig. 10).

(7) Use a blunt punch to exert force on the block tooth to disengage and remove the lock sector (Fig. 11).

(8) Remove the gear selector lever housing and the shroud from the steering column jacket.

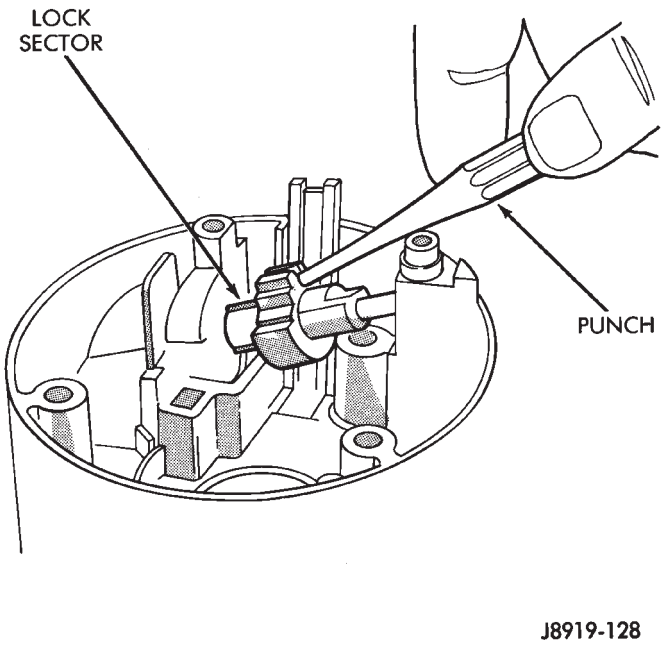

Fig. 11 Lock Sector Removal

(9) Remove the gear selector lever spring from the lever housing.

The steering column must be removed from the vehicle to disassemble the remaining steering column components.

(10) Remove the steering shaft (if not previously removed).

(11) Remove the spring clip from the steering column lower bearing retainer. Remove the retainer, the lower bearing and the adapter (Fig. 12).

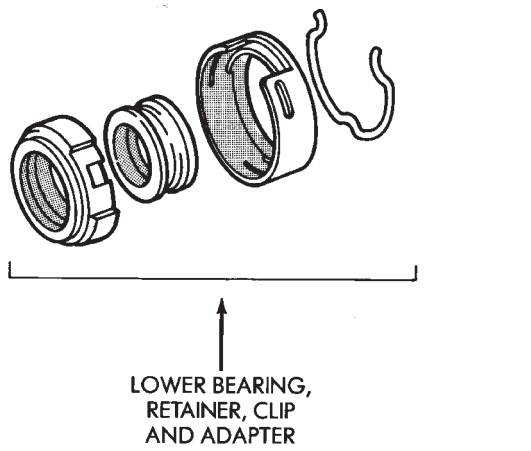

Fig. 12 Lower Bearing, Adapter, Retainer & Clip

(12) Slide out and remove the shift tube.

ASSEMBLY

WARNING: USE ONLY THE ORIGINAL OR EXACT REPLACEMENT SCREWS, BOLTS AND NUTS TO ASSEMBLE THE STEERING COLUMN. INCORRECT SCREW OR BOLT LENGTH COULD PREVENT THE COLUMN FROM COMPRESSING WITH IMPACT (FRONT-END COLLISION). ALL FASTENERS USED FOR ASSEMBLY MUST BE TIGHTENED WITH THE CORRECT TORQUE. THIS WILL ENSURE THE COLUMN WILL BREAKAWAY WITH IMPACT.

CAUTION: Apply chassis lubricant to all the bearing, thrust and friction producing mating surfaces before assembly.

COLUMN SHIFT ASSEMBLY

(1) Insert the lock sector through the key/lock cylinder hole in the key/lock cylinder housing. Install the lock sector on the lock sector shaft (Fig. 13). Ensure that the lock sector turns freely after installation.

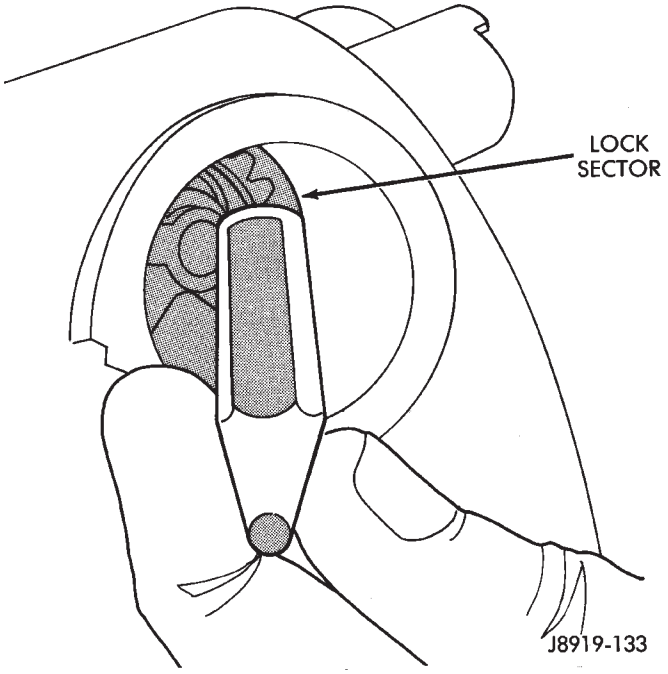

Fig. 13 Lock Sector Installation

(2) Install the lock rack preload spring. The bowed side of the spring must contact the lock rack when the rack is installed.

(3) Assemble the lock bolt and the lock rack (Fig. 14).

(4) Install the assembled lock bolt and lock rack in the key/lock cylinder housing (Fig. 15). Mate the lock rack block tooth with the lock sector block tooth.

(5) Install the shift lever detent plate on the key/lock cylinder housing (Fig. 16).

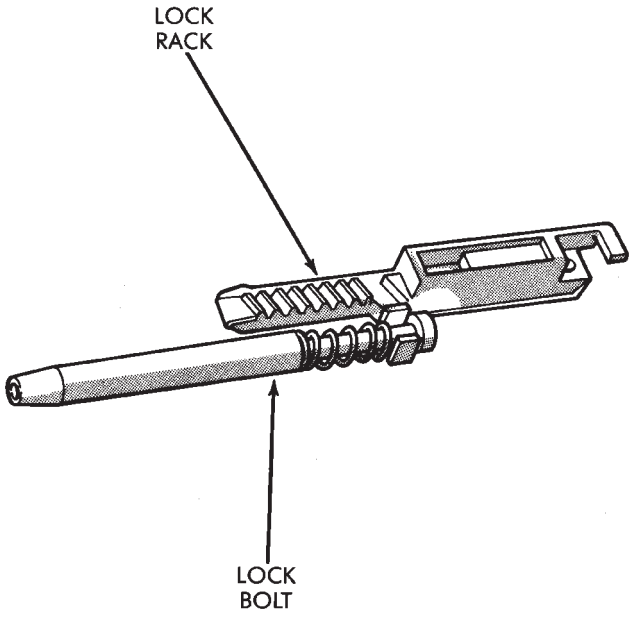

Fig. 14 Lock Bolt & Lock Rack

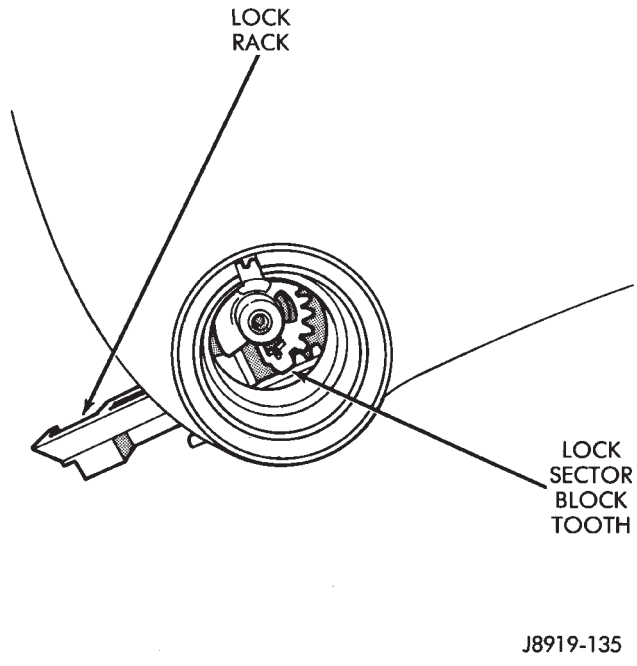

Fig. 15 Lock Bolt/Lock Rack Installation

(6) Install the thrust cap on the key/lock cylinder housing (Fig. 16).

(7) Install the ignition switch actuating rod and rack on the key/lock cylinder housing.

(8) Insert and install the gear selector lever housing lower bearing the housing. Align the indentations in the bearing shell with the projections on the housing jacket.

(9) Install the gear selector lever spring in the lever housing.

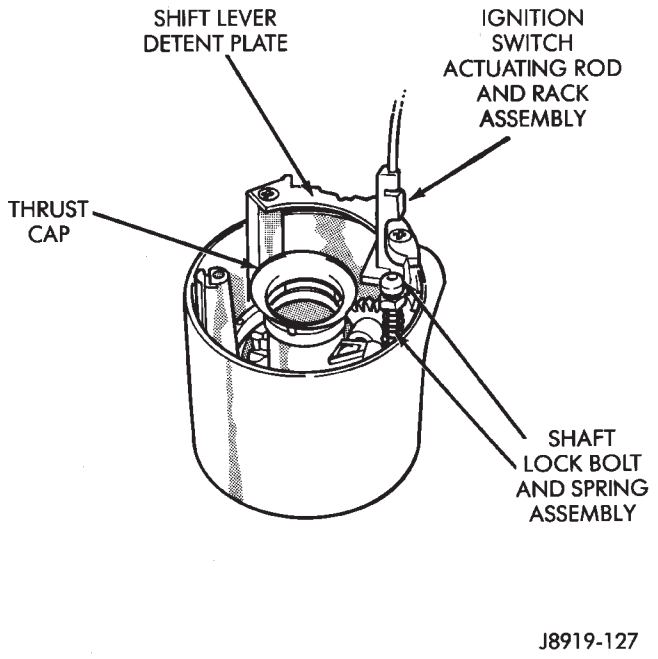

Fig. 16 Key/Lock Cylinder Housing

(10) Install the gear selector lever housing and shroud on the upper end of the steering column jacket. Rotate the housing and ensure that the bearing is properly seated.

(11) Place the gear selector in the PARK position, and the lock rack pulled downward. Position and correctly seat the key/lock cylinder housing on the steering column jacket. Install and tighten the four attaching screws.

(12) Insert the shift tube in the lower end of the steering column jacket. Rotate it until the shift tube upper key slides into the gear selector housing keyway.

COLUMN SHIFT FINAL ASSEMBLY

(1) To install ignition switch lock, turn the key to the LOCK position and remove the key. This will cause the buzzer operating lever to retract in the key/lock cylinder. Now insert the key/lock cylinder into the housing far enough to contact the drive shaft (Fig. 17). Force it inward and move the ignition switch actuator rod up and down to align the components. When the components align, the key/lock cylinder will move inward and lock in place.

(2) Install the key warning buzzer switch.

(3) Install the ignition switch, refer to Ignition Switch —All Models in Group 8D, Ignition.

(4) Install the lower bearing, the adapter, the retainer and spring clip at the lower end of the steering column.

(5) Install the steering shaft through the lower end of the steering column and insert it into the upper bearing.

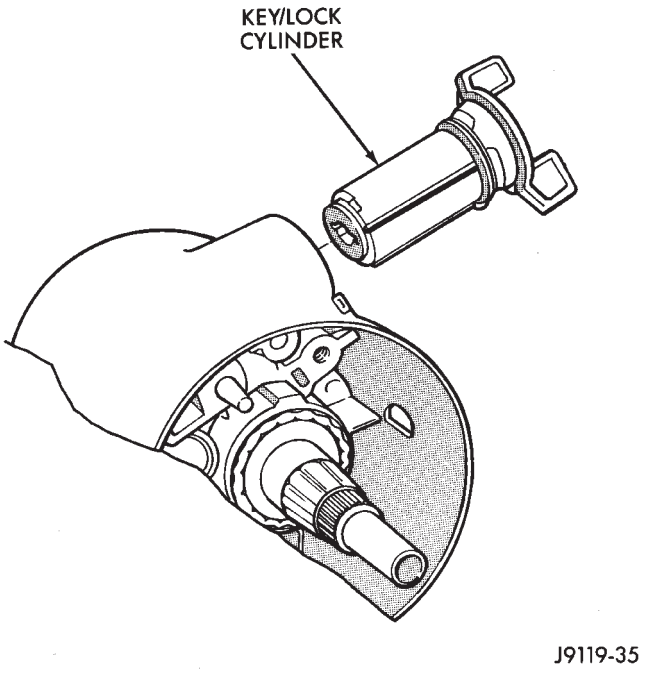

Fig. 17 Key/Lock Cylinder Installation

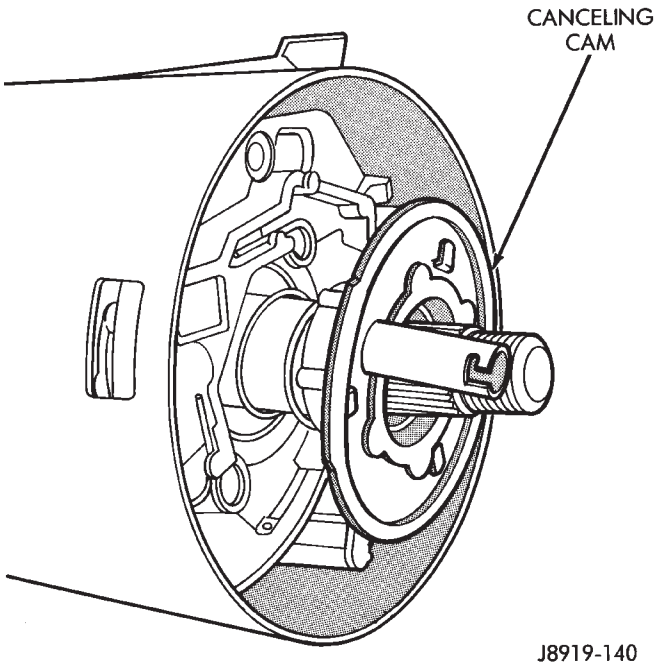

Fig. 18 Canceling Cam Position

(6) Position the turn signal switch and wire harness in the cylinder housing. Fold the wires against the connector. Route the connector down through the steering column jacket.

(7) Install the windshield wiper wire harness and switch. Route the wire harness down through steering column jacket.

(8) Align the turn signal switch in the housing and secure the switch with the attaching screws. Tighten the screws to 4 N·m (35 in. lbs.) torque.

(9) Install the dimmer switch actuator arm. Tighten the attaching screws to 4 N·m (35 in. lbs.) torque.

(10) If equipped, install the cruise control wire harness. Install the turn signal stalk by pushing it straight into the column.

(11) Position the thrust washer, the upper bearing preload spring and the canceling cam on the steering shaft (Fig. 18).

(12) Place the turn signal switch in the neutral (OFF) position and install the hazard warning switch knob.

(13) Position the lockplate on the steering shaft. Install a replacement lockplate retaining snap ring on the sleeve of the Lock Plate Compressor C-4156. Install the tool on the steering shaft (Fig. 19).

(14) Compress the lockplate with the compressor tool and position the retaining snap ring in the steering shaft groove.

(15) Ensure that the retaining snap ring is completely seated in the groove before removing the tool. Remove the tool and install the lockplate cover.

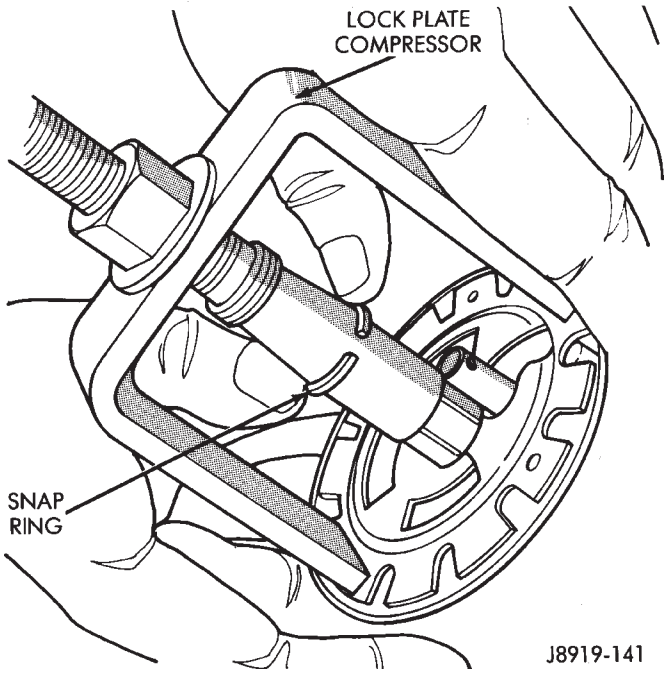

Fig. 19 Lockplate Snap Ring Installation

(16) Install the steering wheel. Refer to the installation procedure. Tighten the steering wheel retaining nut to 34 N·m (25 ft. lbs.) torque.

(17) If removed, install the steering column in the vehicle. Refer to the installation procedure.

(18) If disconnected, connect the battery negative cable and, if equipped, reset the clock

TILT STEERING COLUMN

DISASSEMBLY

(1) Remove the steering column from the vehicle, if necessary. Refer to the removal procedure.

(2) If the column is removed for service, fabricate a support fixture to clamp it in a vise (Fig. 1).

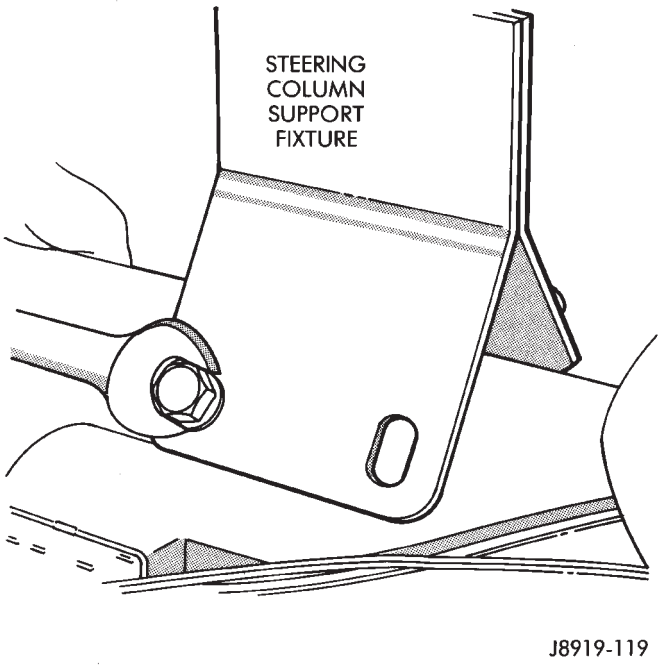

Fig. 1 Steering Column Support Fixture

(3) If the steering column has not been removed from the vehicle, place the front wheels in the straight-ahead position. Disconnect the battery negative cable.

(4) Protect the painted areas on the steering column.

(5) Remove the steering wheel. Refer to the removal procedure.

(6) Column shift: Remove the gear selector lever retaining pin and the lever from the housing.

(7) Remove the lockplate cover. Use two small pry bars to pry the cover off the lockplate.

WARNING: THE LOCKPLATE RETAINS A VERY STRONG, SPRING FORCE. DO NOT ATTEMPT TO REMOVE THE STEERING SHAFT RETAINING SNAP RING WITHOUT USING LOCKPLATE COMPRESSOR C-4156.

(8) Compress the lockplate with Lock Plate Compressor C-4156 and release the steering shaft retaining snap ring (Fig. 2).

(9) Remove the lockplate compressor tool and the retaining snap ring. Discard the snap ring.

(10) Remove the lockplate, canceling cam, upper bearing preload spring, and the thrust washer from the steering column/shaft.

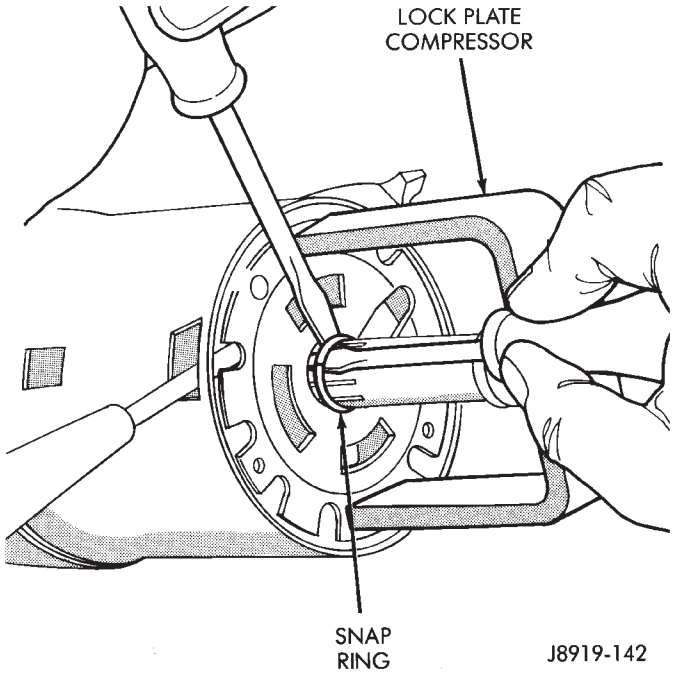

Fig. 2 Lockplate Snap Ring Removal

(11) Remove the hazard warning switch knob. Press the knob inward and remove it from the steering column by turning it counterclockwise.

(12) If the steering column is the column shift type, remove the two retaining screws and the gear selector indicator cover.

(13) If the steering column is the column shift type, remove the gear selector indicator lamp bracket retaining screw. Do not remove the lamp and bracket at this time.

(14) Remove the tilt-release lever.

(15) Disconnect the turn signal wire harness connector from the bracket located at the lower end of the steering column (Fig. 3).

CAUTION: Wrap tape around the turn signal switch wire harness connector to prevent it from becoming entangled during removal.

(16) Remove the plastic protector from the wire harness.

(17) Remove the turn signal switch retaining screws (Fig. 4), dimmer switch actuator arm, to remove the switch. Guide the switch straight up and out of the steering column.

(18) Remove the windshield wiper switch wire harness and all the other wire harnesses located within the steering column.

(19) Insert the ignition switch key into the key/lock cylinder. Turn the key to the ON position.

CAUTION: Do not attempt to remove the key warning buzzer switch and contacts separately. If separated, the contacts can detach and drop into the steering column.

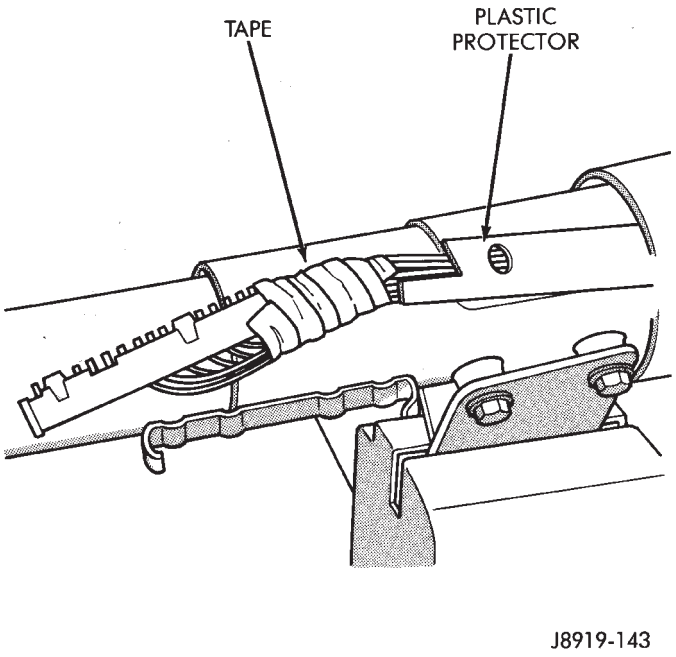

Fig. 3 Turn Signal Switch Wire Harness Connector

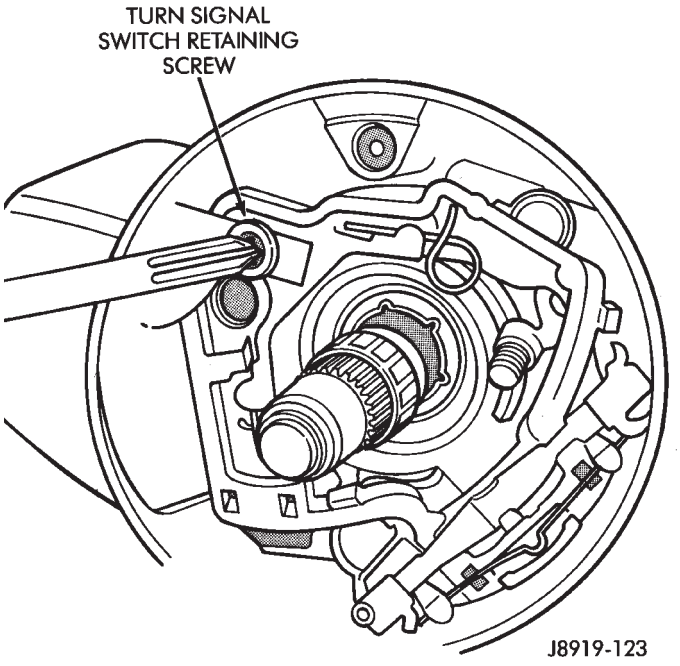

Fig. 4 Turn Signal Switch Removal

(20) Remove the key warning buzzer switch and contacts as a unit (Fig. 5). Use needle-nose pliers or a paper clip bent at a right angle (90 degrees).

(21) Turn ignition key/lock cylinder to the ON position. Insert a thin screwdriver into the slot adjacent to the switch attaching screw boss (right-hand slot). Depress the spring latch located at the bottom of the slot to release the key/lock cylinder. Remove the cylinder (Fig. 6).

(22) Remove the ignition switch and dimmer switch (Fig. 7) from the lower end of the steering column.

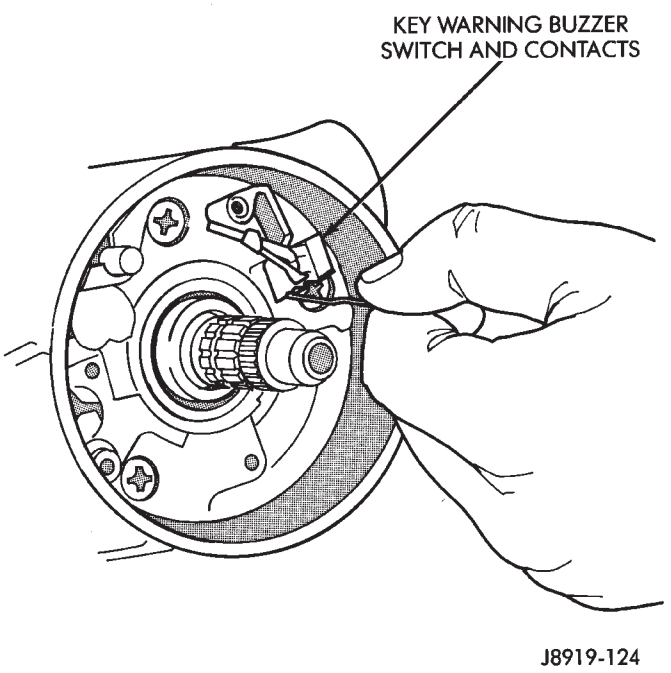

Fig. 5 Key Warning Buzzer/Contacts Removal

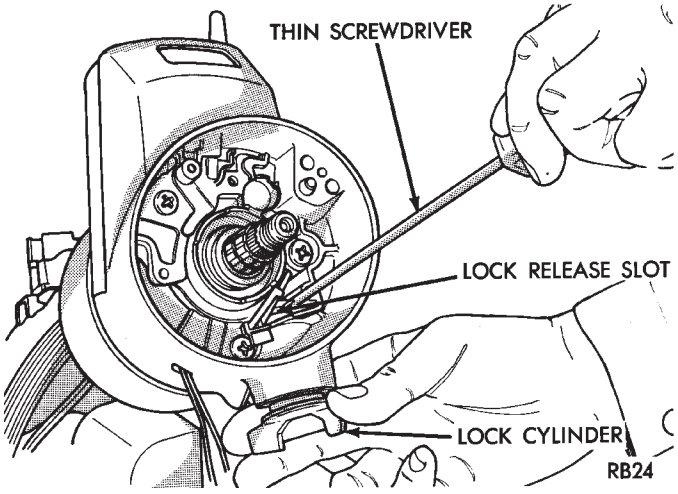

Fig. 6 Key/lock Cylinder Removal

(23) Remove the screws that attach the key/lock cylinder housing cover to the steering column jacket. Remove the cover.

(24) Remove the upper bearing race and the bearing seat from the steering shaft (Fig. 8).

(25) Install the tilt-release lever and place the steering column in the full upward tilt position.

WARNING: THE TILT SPRING GUIDE RETAINER RETAINS STRONG SPRING FORCE.

(26) Press the tilt spring guide retainer inward. Turn it counterclockwise until the tabs disengage from the key/lock cylinder housing lugs. Ensure that the screwdriver blade properly fits the retainer slot. Remove the tilt spring guide retainer, the guide and the spring from the housing (Fig. 9).

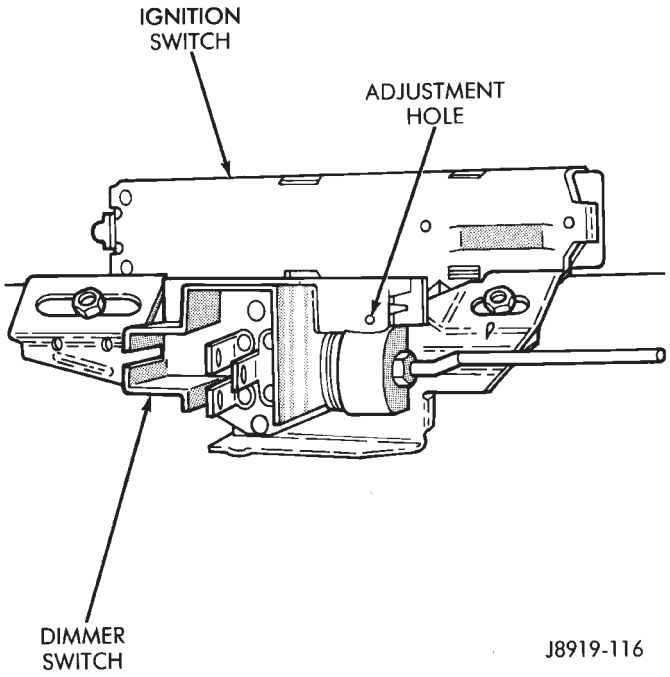

Fig. 7 Ignition Switch & Dimmer Switch

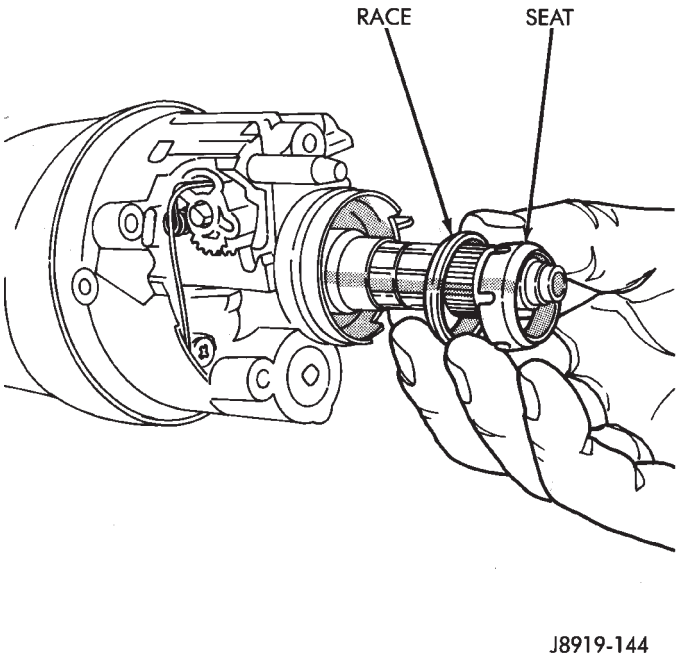

Fig. 8 Steering Shaft Bearing Race & Seat

(27) Position the steering column in the center, non-tilt position.

(28) Remove the support pivot pins with Pivot Pin Remover C-4016 (Fig. 10).

(29) Lift the tilt-release lever to release the lock shoes. Pull the key/lock cylinder housing upward to disengage the shoes. Turn the housing clockwise to separate the lock rack from the remote rod. Remove the cylinder housing from the support (Fig. 11).

(30) Remove the tilt-release lever from the key/lock cylinder housing.

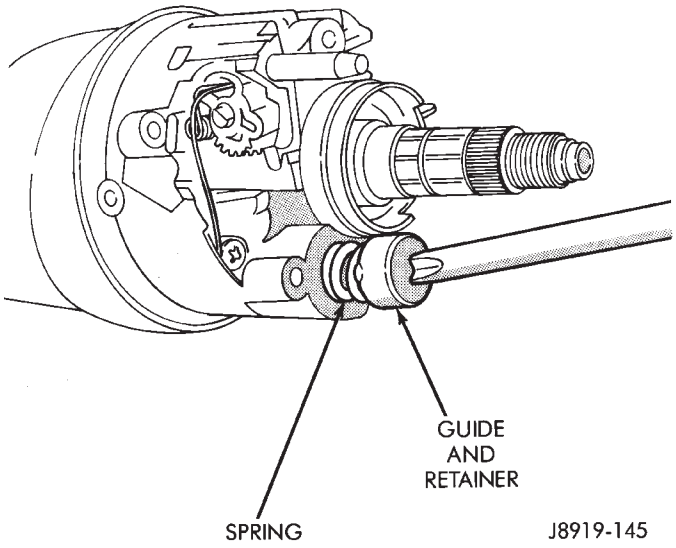

Fig. 9 Retainer/Guide/Spring Removal

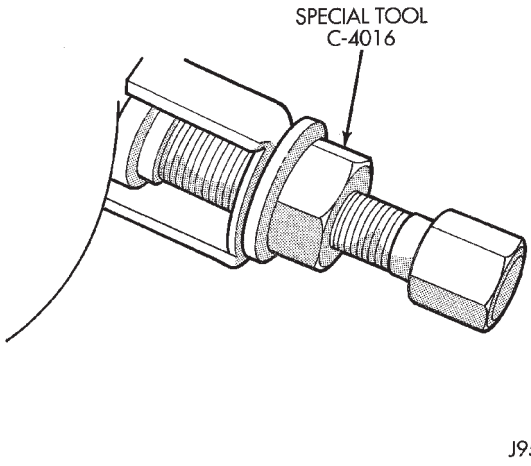

Fig. 10 Pivot Pin Removal

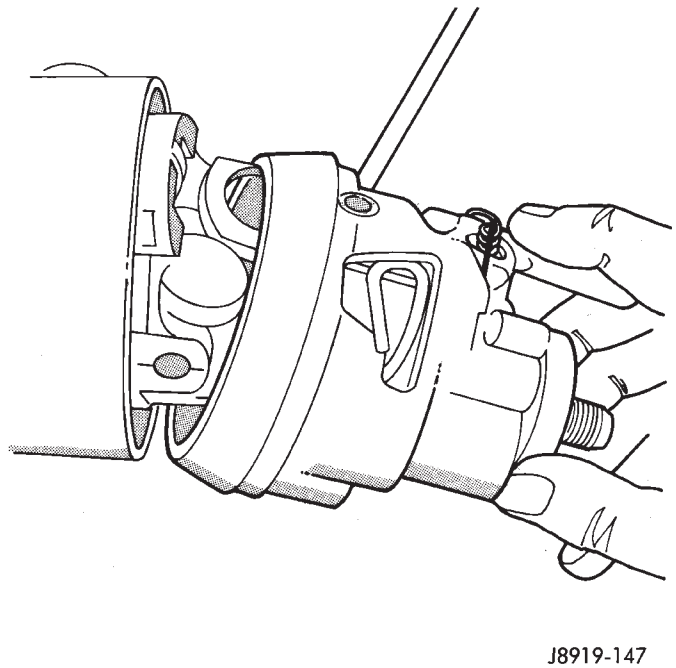

Fig. 11 Key/Lock Cylinder Housing Removal

(31) Remove the lock sector spring retaining screw and then remove the spring (Fig. 12). Rotate the spring in a clockwise direction to remove it from the lock bolt.

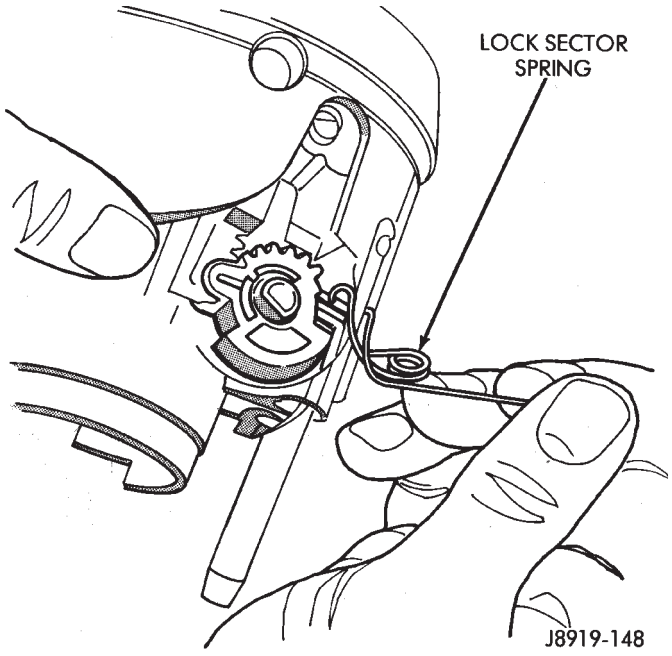

Fig. 12 Lock Sector Spring Removal

(32) Remove the lock bolt, the lock rack, the rack preload spring and the remote rod from the cylinder housing.

(33) Insert a wedge between the lock shoes and the key/lock cylinder housing (Fig. 13). This will relieve spring tension on the tilt-release lever pin and lock shoe pin.

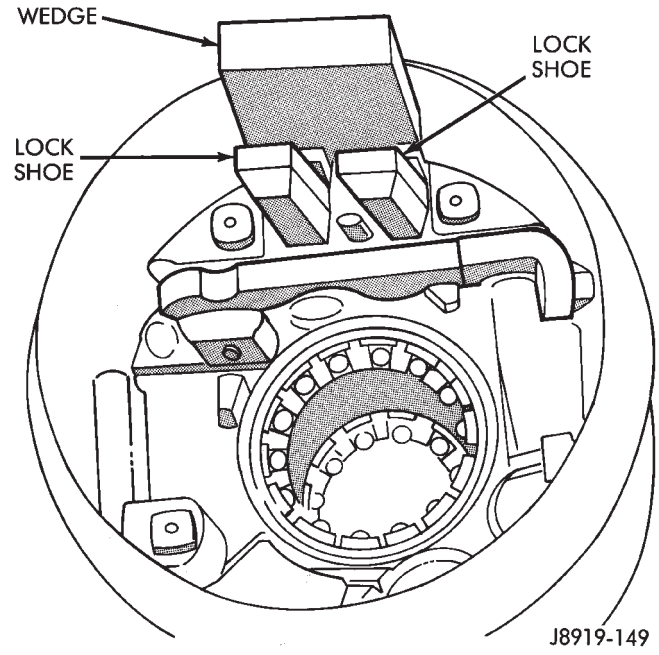

Fig. 13 Wedge Between Lock Shoes & Housing

(34) Remove the tilt-release lever pin from the key/lock cylinder housing with a standard pin punch (Fig. 14).

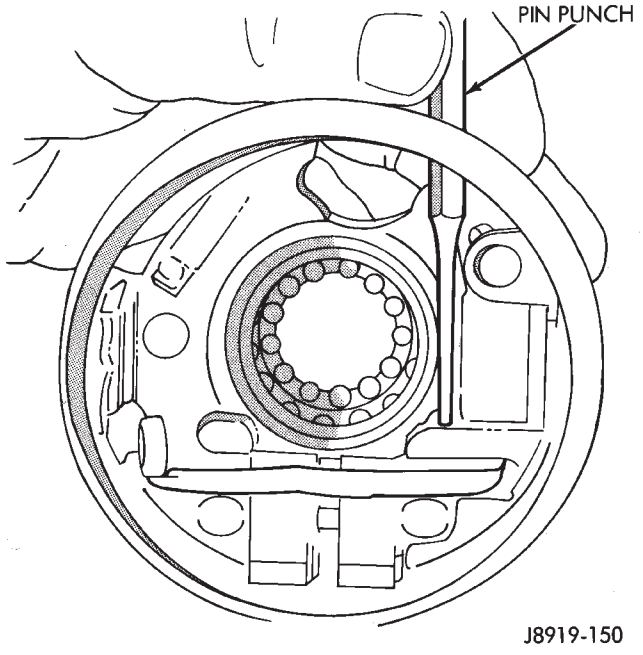

Fig. 14 Tilt-release Lever Pin Removal

(35) Remove the lock shoe pin from the key/lock cylinder housing with a standard pin punch (Fig. 15). Remove the lock shoes, the springs and wedge.

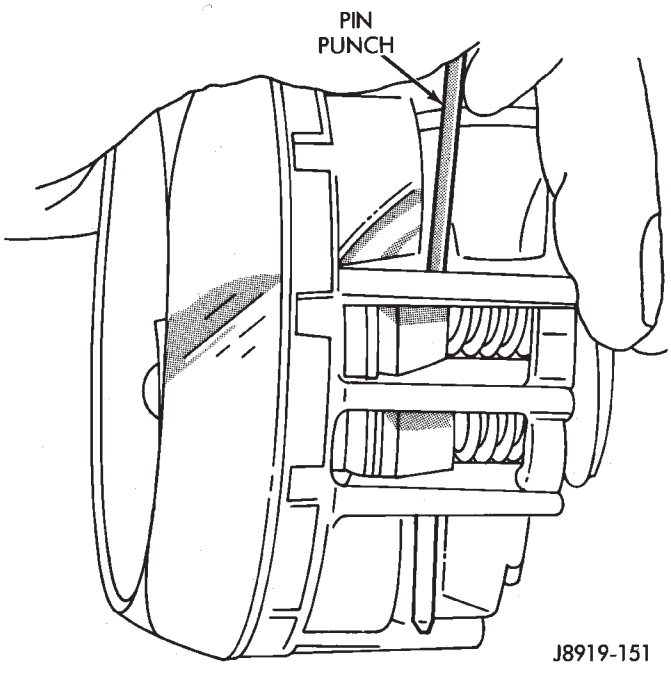

Fig. 15 Lock Shoe Pin Removal

(36) Remove the upper and the lower bearings and races from the key/lock cylinder only if they are damaged or worn. If the bearings and the races must be

replaced, remove them with a hammer and punch. Discard the bearings and races after removal. They are not reusable.

(37) Remove the steering shaft from the upper end of the steering column.

(38) Separate the steering shaft by folding it 90 degrees at the flexible joint. Detach the upper and the lower shaft halves (Fig. 16).

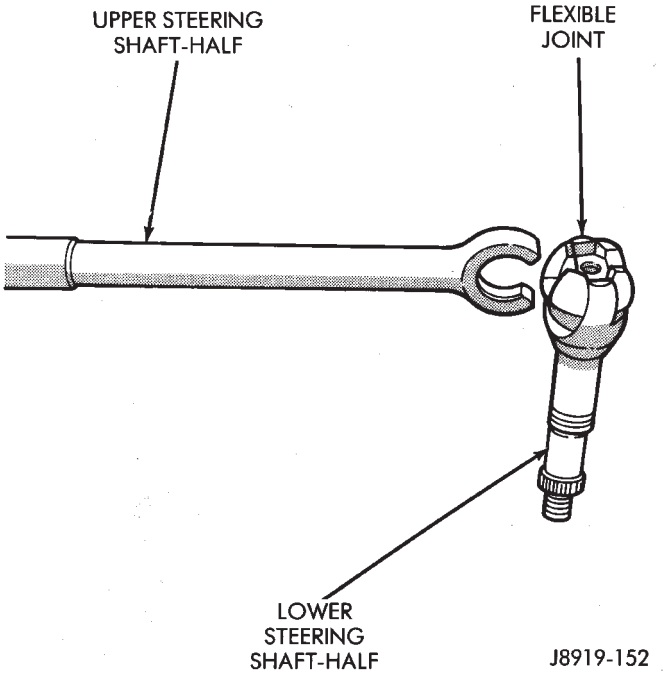

Fig. 16 Steering Shaft Separation

(39) Remove the attaching bolts and the steering column support (Fig. 17).

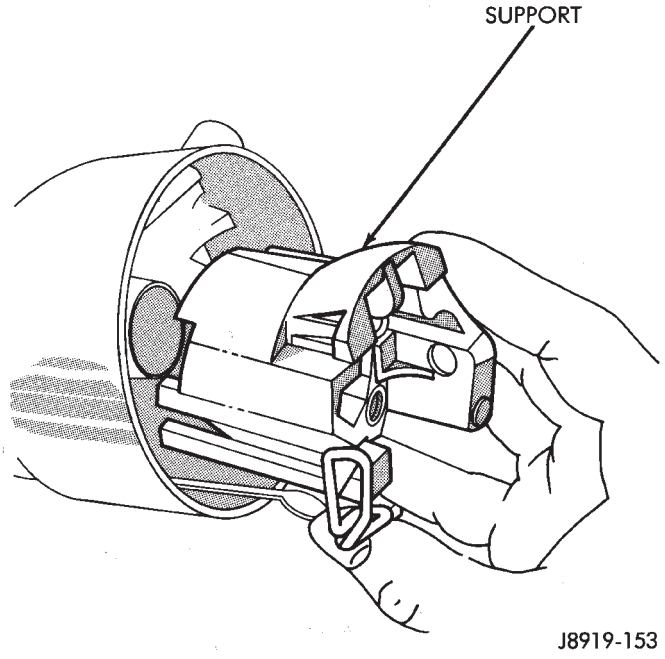

Fig. 17 Steering Column Support Removal

(40) Remove the retaining screws and shift gate from the steering column support.

(41) Remove the retainer and the bearing from the lower end of the steering column.

(42) Remove the shift tube retaining ring and the thrust washer.

(43) Remove the shift tube from the steering column jacket with Shift Tube Remover C-4120 (Fig. 18).

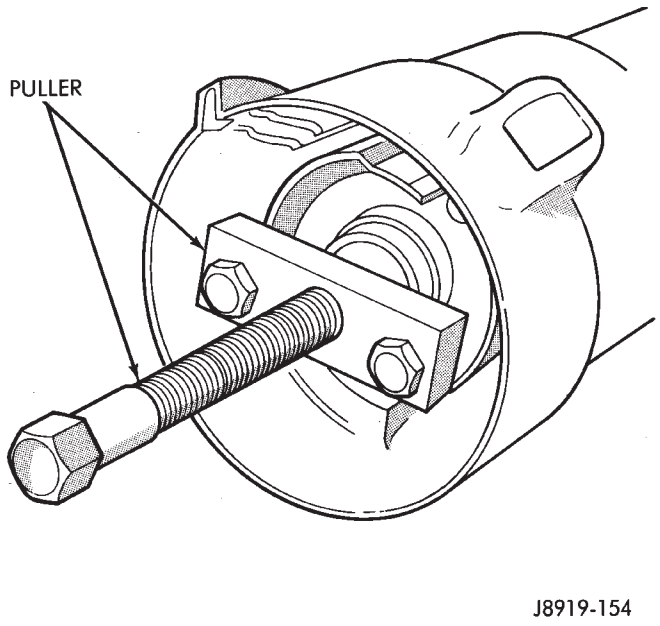

Fig. 18 Shift Tube Removal

(44) Tilt the upper end of the retainer plate toward the lower end of the column, turn the plate counterclockwise and remove it (Fig. 19).

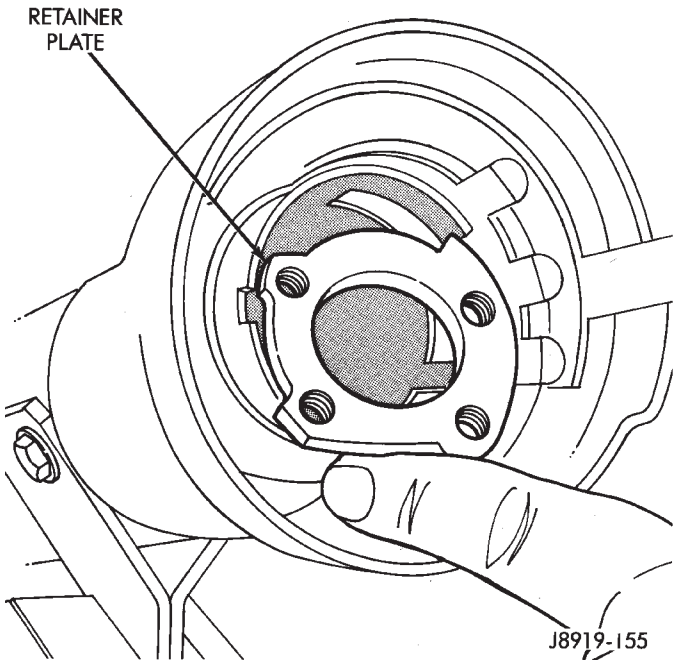

Fig. 19 Retainer Plate Removal

(45) If equipped with a column shift:
- Remove the wave washer and the shift tube spring
- Remove the shift bowl from the steering column jacket

(46) If equipped with a console shift, remove the key-release lever and the lever spring from the shroud. Tilt the lever forward and lift upward to remove it (Fig. 20).

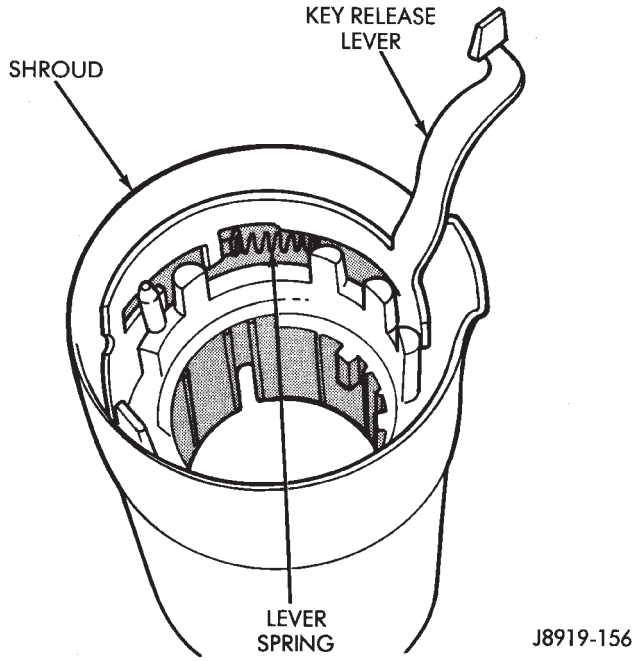

Fig. 20 Key-Release Lever & Spring Removal

ASSEMBLY

WARNING: USE ONLY THE ORIGINAL OR EXACT REPLACEMENT SCREWS, BOLTS AND NUTS TO ASSEMBLE THE STEERING COLUMN. INCORRECT SCREW OR BOLT LENGTH COULD PREVENT THE COLUMN FROM COMPRESSING WITH IMPACT (FRONT-END COLLISION). ALL FASTENERS USED FOR ASSEMBLY MUST BE TIGHTENED WITH THE CORRECT TORQUE. THIS WILL ENSURE THE COLUMN WILL BREAKAWAY WITH IMPACT.

CAUTION: Apply chassis lubricant to all the bearing, thrust and friction producing mating surfaces before assembly.

(1) Install the shift bowl on the steering column jacket.

(2) Install the shift tube spring, wave washer and retainer plate in the shift bowl.

(3) Insert the shift tube through the lower end of the steering column jacket. Align the tube key/spline with the shift bowl keyway.

(4) Insert the Shift Tube Installer C-4119 in the shift tube. The spring-loaded lower foot of the tool must engage the shift tube inner shoulder. The tool guide must be seated in the shift tube (Fig. 21).

(5) Tighten the nut on the stud (Fig. 21) only enough to obtain a snug fit against the spring tension.

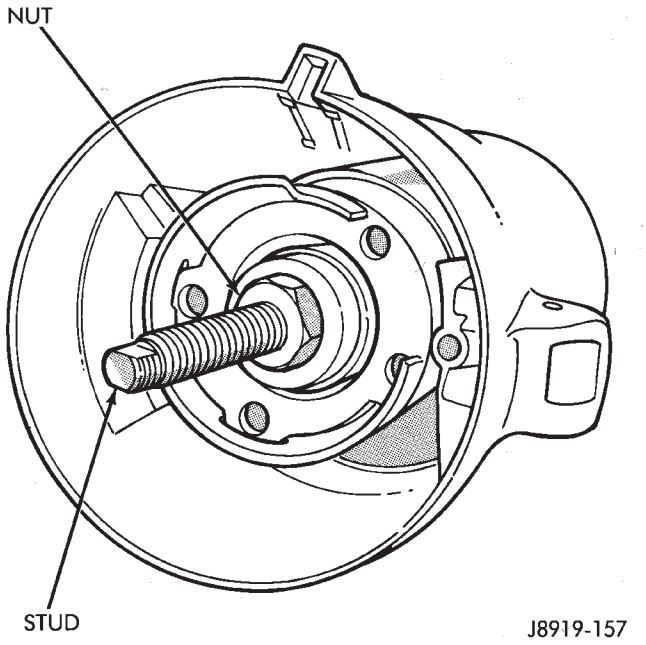

Fig. 21 Shift Tube Installation

(6) Remove the nut and place the receiver installation tool over the stud (Fig. 22).

(7) Install the nut and tighten it to force the shift tube into the shift bowl (Fig. 22).

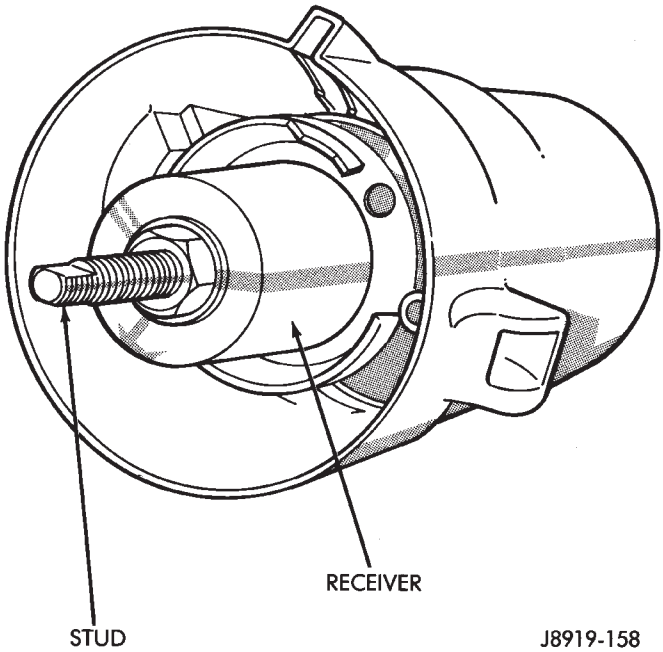

Fig. 22 Shift Tube Installation

(8) Remove the shift tube installation tools.

(9) Install the shift tube thrust washer and the retainer plate snap ring.

(10) Install the lower bearing in the steering column.

(11) Position the shift gate in the steering column support. Install the attaching screws.

(12) Position the support in the steering column.

(13) Install all support attaching screws finger-tight. Next, tighten the screws alternately and evenly to 7 N·m (60 in. lbs.) torque.

(14) Install the remote rod in the support. Route the rod through the upper end of the shroud and insert it into the rod slot located in the support.

(15) Install the dimmer switch and ignition switch.

(16) Install the steering shaft in the steering column.

(17) Install replacement races and bearings in the key/lock cylinder, if removed. **Ensure that the bearings are lubricated with chassis lubricant before installation.**

(18) Install the lock shoes, the lock shoe springs and the lock shoe pin the key/lock cylinder housing. Use a 4.5-mm (0.18-in) diameter rod to align the shoes and the pin during installation.

(19) Install the tilt-release lever, the lever spring and the lever pin in the key/lock cylinder housing. Insert a wedge between the housing and the lever to relieve the spring tension. This will allow easier release lever pin installation.

(20) Install the lock bolt in the key/lock cylinder housing and engage it in the lock sector cam surface.

(21) Install the lock rack, the rack preload spring and a replacement shim in the key/lock cylinder housing. Align and mate the square block tooth on the lock rack and the lock sector.

(22) Install the lock spring and the spring retaining screw. Tighten the screw to 4 N·m (35 in. lbs.) torque.

(23) Align and install the assembled key/lock cylinder housing on the support. Retain the lock shoes in the disengaged position for easier housing installation.

(24) Align the pivot pin holes in the housing with those in the support. Insert the pivot pins. **Press the housing firmly downward when inserting the pivot pins. This prevents damaging the holes in the support.** When the pivot pins are within both the housing and the support holes, seat them fully with a punch and a hammer.

(25) Insert tilt-release lever in key/lock cylinder housing and place housing in the full-upward tilt position.

(26) Lubricate the tilt spring guide and the tilt spring liberally with chassis lubricant and position the spring on the guide.

(27) Insert the tilt spring guide and the spring into the key/lock cylinder housing. Install the guide retainer over the spring. Engage the retainer lock tabs with the housing lugs by pressing the retainer downward and turning clockwise with a screwdriver.

(28) Place the cover on the key/lock cylinder housing. Align and install the cover retaining screws. Tighten the screws to 7 N·m (60 in. lbs.) torque.

(29) Install the gear selector indicator lamp mounting bracket screw.

(30) Install the gear selector indicator cover and retaining screws.

(31) Route the dimmer switch wire harness and gear selector indicator down through the steering column.

(32) To install ignition switch lock, turn the key to the LOCK position and remove the key. This will cause the buzzer operating lever to retract in the key/lock cylinder. Now insert the key/lock cylinder into the housing far enough to contact the drive shaft. Force it inward and move the ignition switch actuator rod up and down to align the components. When the components align, the key/lock cylinder will move inward and the spring-loaded retainer will snap and lock it in place (Fig. 23).

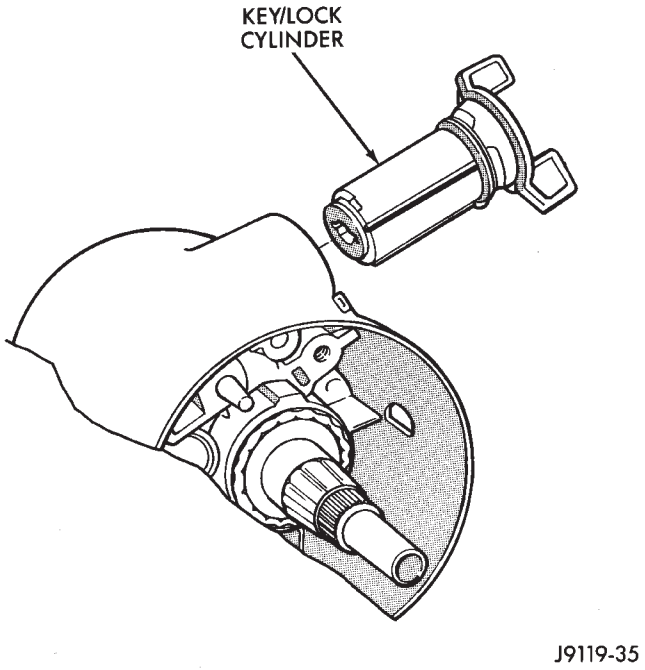

Fig. 23 Key/Lock Cylinder Installation

(33) Insert the ignition key in the cylinder and turn it to the ON position. Install the key warning buzzer switch.

(34) Install the turn signal switch. Fold the wires against the connector. Route the wire harness and connector down through the steering column. Position the switch in the key/lock cylinder housing. **Do not** install the switch retaining screws at this time.

(35) Install the windshield wiper wire harness and switch. Route the wire harness down through steering column jacket.

(36) If equipped, install the cruise control wire harness. Install the turn signal stalk by pushing it straight into the column.

(37) Insert the hazard warning knob in the hazard warning switch and press it inward. Align and install the turn signal switch retaining screws. Ensure that the turn signal switch is properly seated before tightening the screws. Tighten the screws to 4 N·m (33 in. lbs.) torque. Thread the hazard warning switch knob into the switch and pull the knob outward.

(38) Install and seat the upper bearing race in the key/lock cylinder housing.

(39) Install the upper bearing preload spring, the canceling cam and the lockplate.

(40) Install a replacement lockplate retaining snap ring on the sleeve of the Lock Plate Compressor C-4156. Install the tool on the steering shaft (Fig. 24).

(41) Compress the lockplate with the compressor tool and position the retaining snap ring in the steering shaft groove.

(42) Remove the compressor tool. Ensure that the retaining ring is completely seated in the groove before removing the tool.

(43) Position the wire harness protectors if equipped, over the harnesses and snap in place on steering column.

(44) Install the lockplate cover.

(45) Install the gear selector lever and the retaining pin.

(46) Install the steering wheel. Refer to the installation procedure.

(47) Insert the ignition key in the key/lock cylinder; turn the cylinder to the OFF-UNLOCK position ; move the ignition switch downward to eliminate any switch-to-remote rod lash; and tighten the ignition switch attaching screws to 4 N·m (35 in. lbs.) torque.

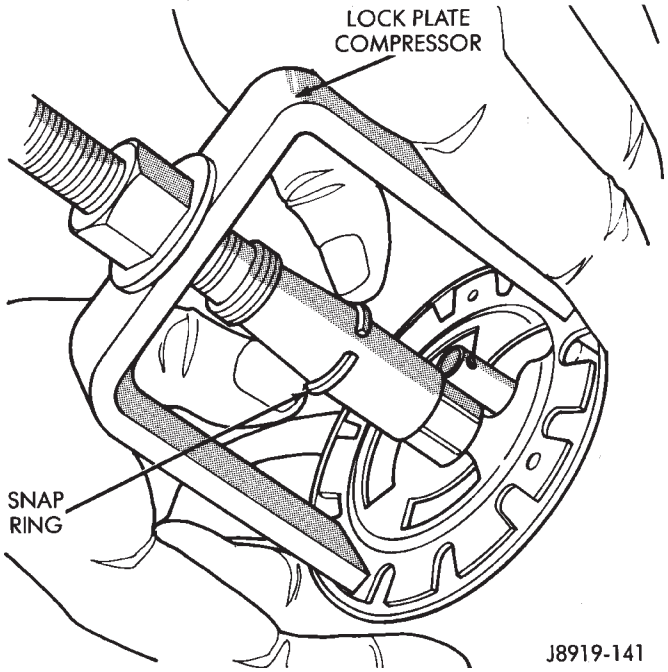

Fig. 24 Lockplate Retaining Ring Installation

(48) Depress the dimmer switch slightly and insert a 3/32-inch drill bit into the adjustment hole.

(49) Loosen the retaining screws and move the dimmer switch toward the steering wheel. Tighten the dimmer switch retaining screws to 4 N·m (35 in. lbs.) torque.

(50) Remove the drill bit and test operation by moving the dimmer switch stalk. Test the dimmer switch operation in the full-up, down and center steering wheel positions.

(51) Install the steering column, if applicable. Refer to the installation procedure.

STEERING RHD

GENERAL SERVICE PROCEDURE INFORMATION

Right hand drive service procedures and torque specifications involving steering; linkage, gear and column are the same as left hand drive vehicles except where shown. Refer to appropriate service procedures regarding each component in the system.

The steering linkage consists of a pitman arm, drag link, and tie rod. Adjustment sleeves are used on the tie rod and drag link for toe and steering wheel alignment (Fig. 1).

RECIRCULATING-BALL POWER STEERING GEARS

The steering gears can be adjusted and internally serviced. The components CANNOT be interchanged with those of a left hand drive vehicle.

The steering gear has a 17.5:1 ratio.

POWER STEERING PUMP

PRESSURE AND RETURN LINE REPLACEMENT

Cap hose open ends and pump/steering gear fittings to prevent entry of foreign material.

WARNING: POWER STEERING FLUID (AND PUMP COMPONENTS) AND THE EXHAUST SYSTEM CAN BE EXTREMELY HOT IF THE ENGINE HAS BEEN RECENTLY OPERATING. DO NOT START THE ENGINE WITH ANY LOOSE OR DISCONNECTED HOSES. DO NOT ALLOW THE LINES TO TOUCH A HOT EXHAUST MANIFOLD.

REMOVAL

(1) Place a drain pan under the pump and gear.

(2) Disconnect the pressure and return line from the steering gear (Fig. 2, 3).

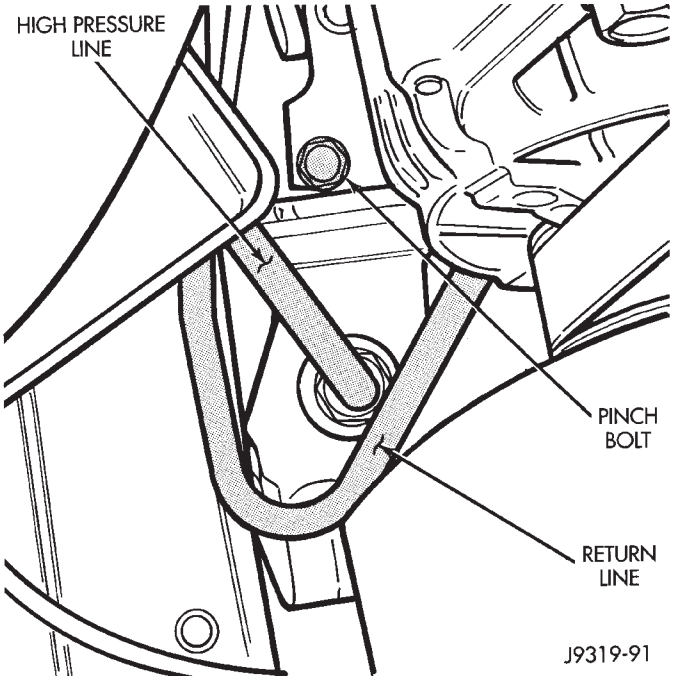

Fig. 2 Fluid Lines On Steering Gear

(3) Disconnect the pressure and return line from the pump (Fig. 4). Drain the fluid from pump and reservoir.

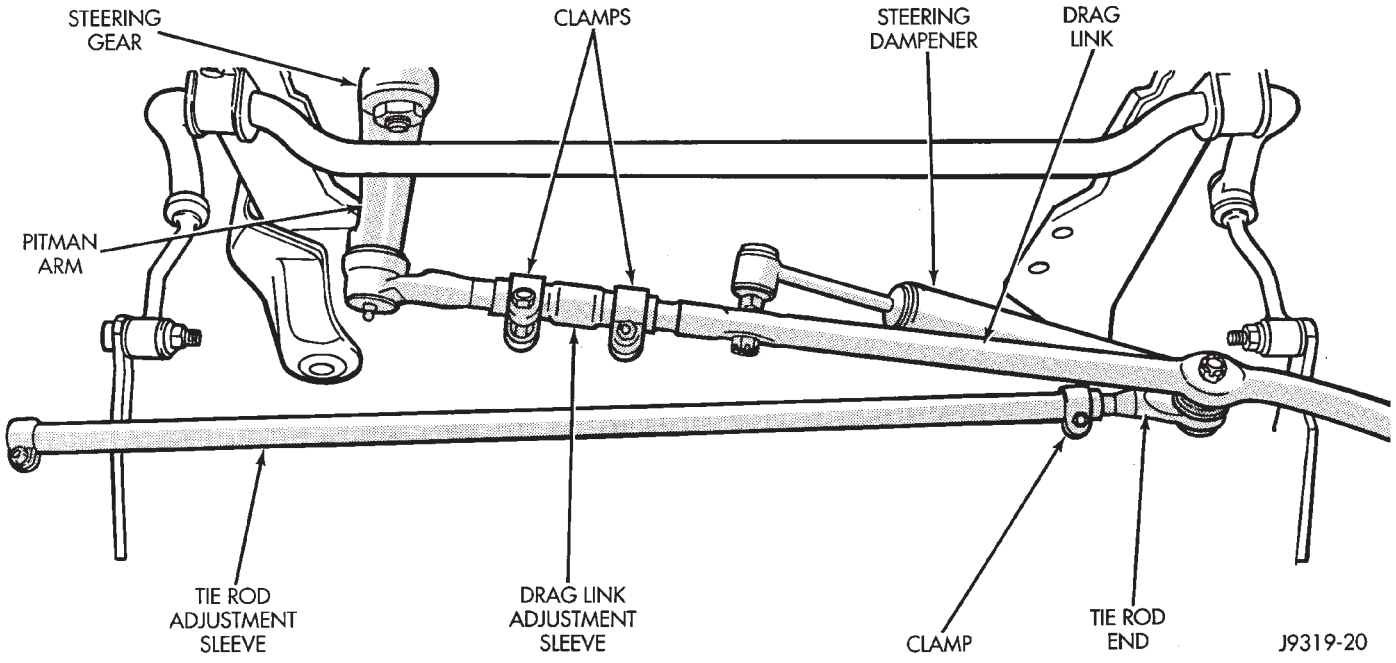

Fig. 1 RHD Steering Linkage

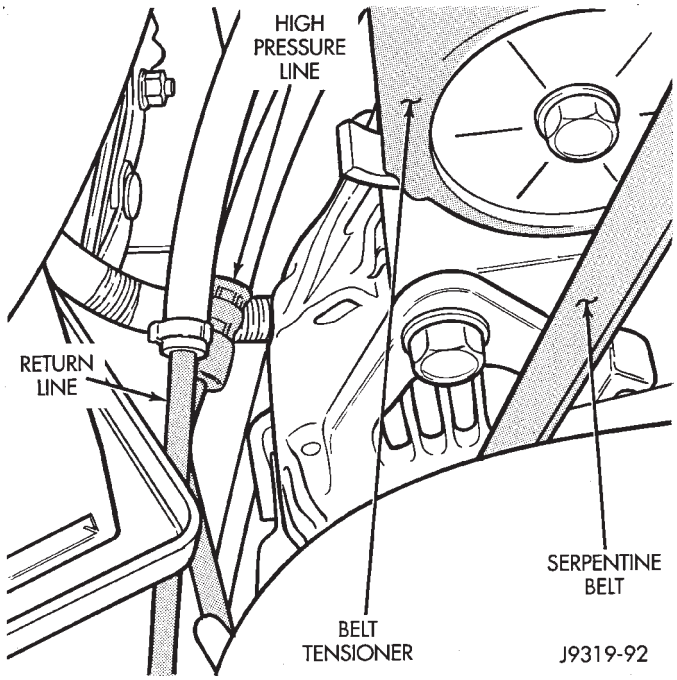

Fig. 3 Pressure And Return Lines

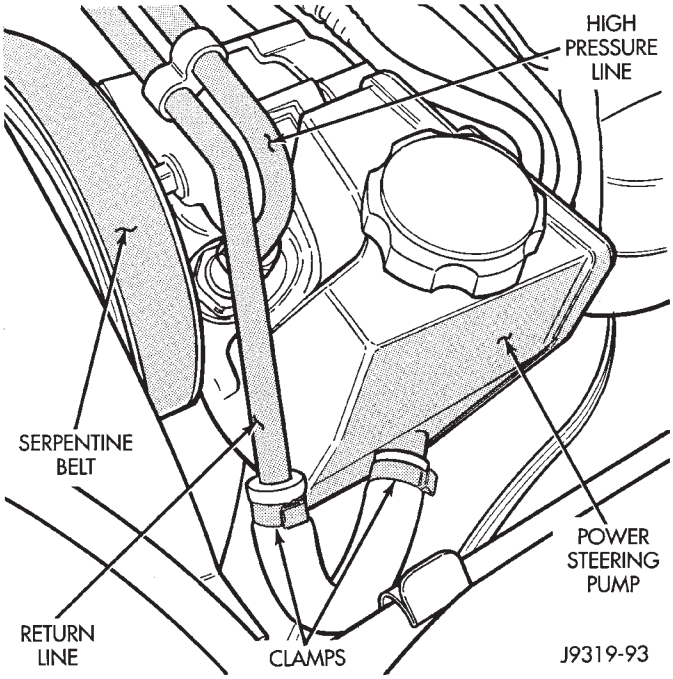

Fig. 4 Fluid Lines At Pump

(4) Remove pressure and return line bracket at belt tensioner (Fig. 5).

INSTALLATION

(1) Wipe hose ends, pump and gear unions clean.

(2) Install pressure and return line on the pump and gear (Fig. 2, 3, 4).

(3) Align the pressure and return line bracket to the tensioner bracket. Install the screw. Tighten the screw to 28 N·m (21 ft. lbs.) torque.

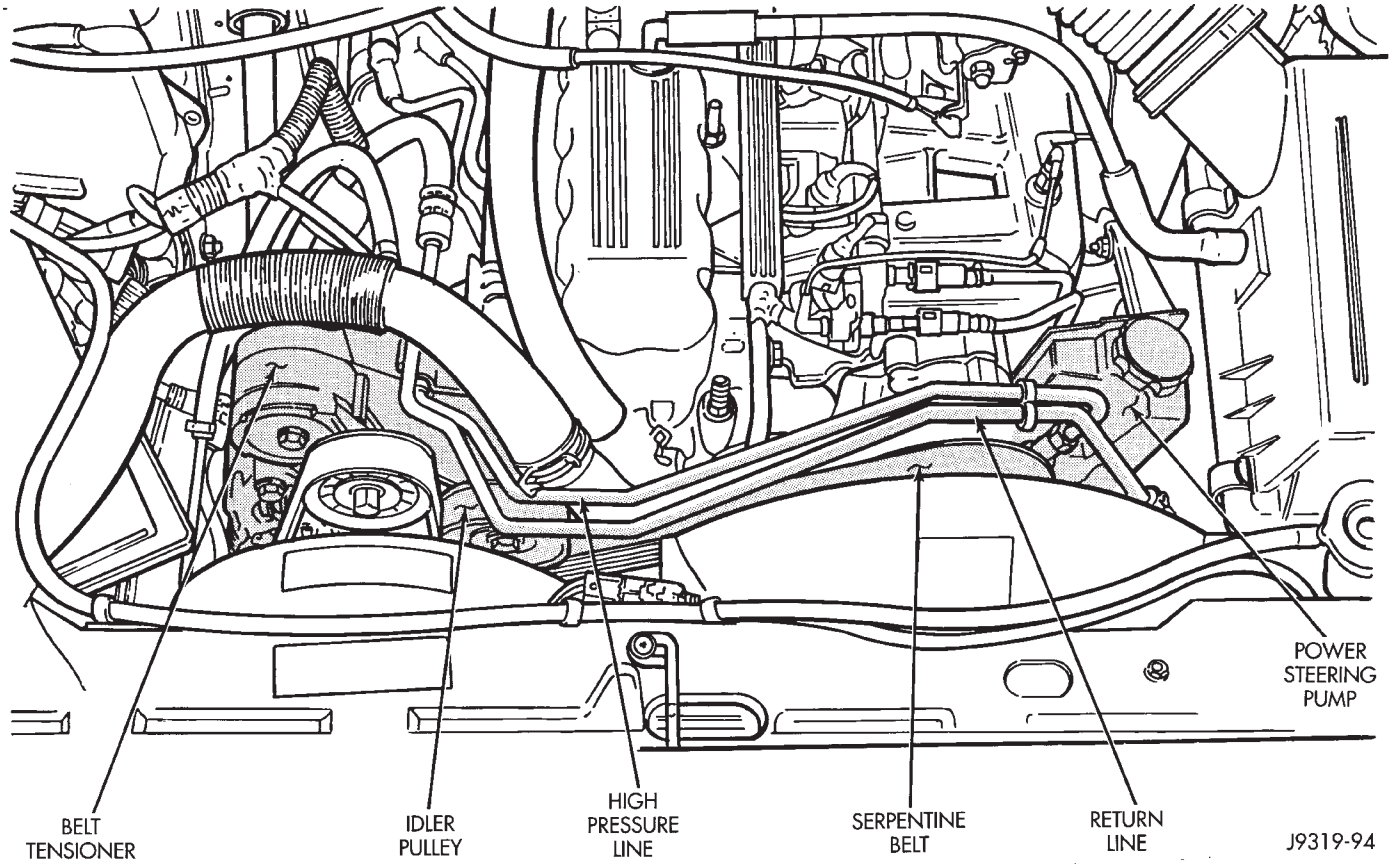

Fig. 5 Pressure And Return Line Routing

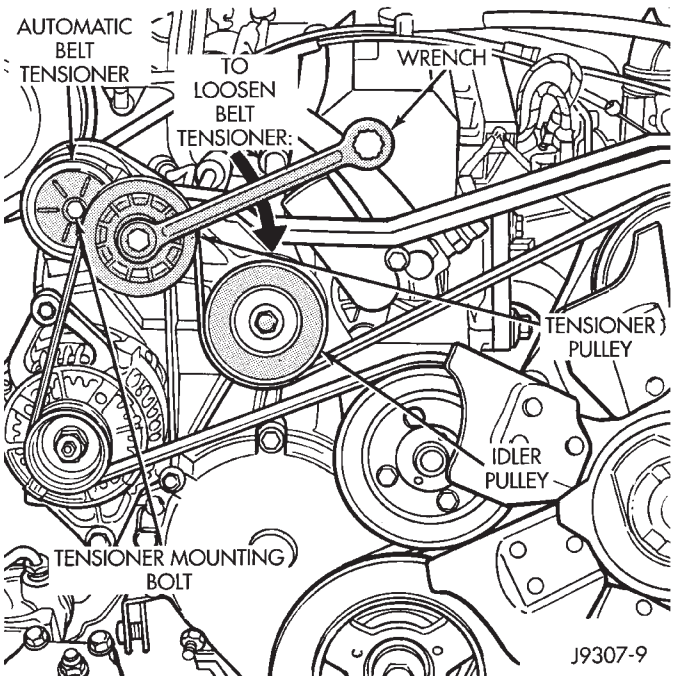

Fig. 6 Belt Tensioner

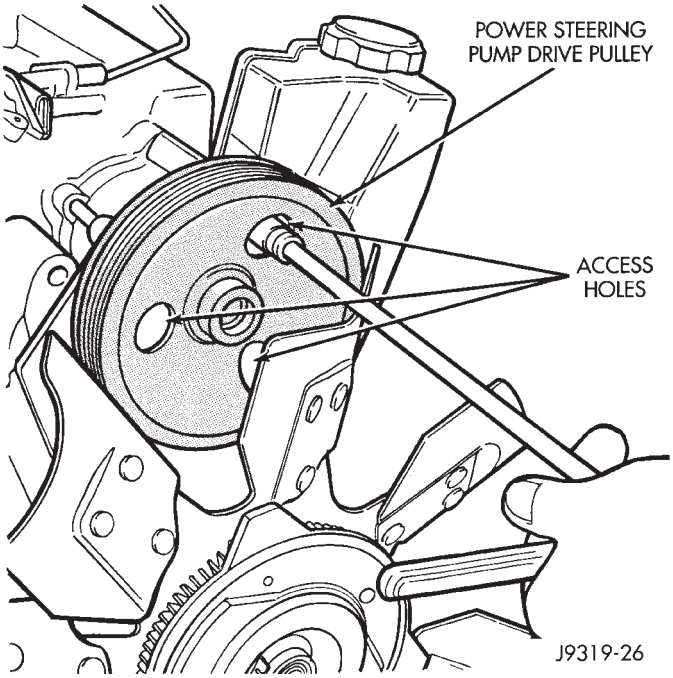

Fig. 7 Pump Mounting Screw Removal/Installation

(4) Tighten fittings at pump and gear to 28 N·m (21 ft. lbs.) torque.

(5) After installation, add power steering fluid, inspect and test for fluid leaks.

PUMP REPLACEMENT

REMOVAL

(1) Remove and cap pressure and return lines from pump. Refer to Pressure and Return Line Replacement in this section.

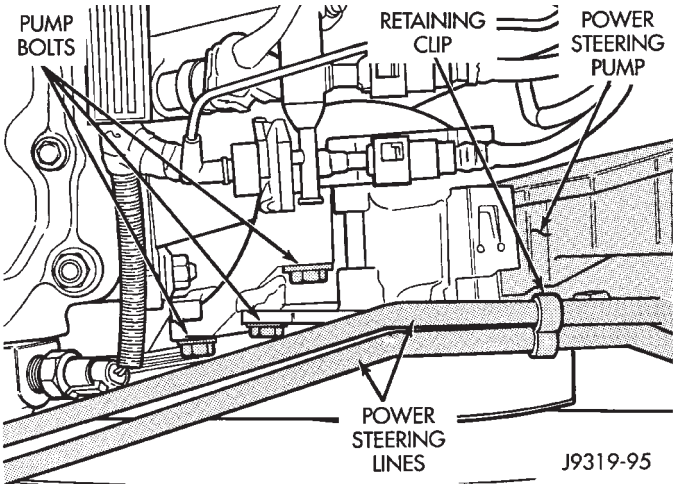

Fig. 8 Power Steering Pump Mounting

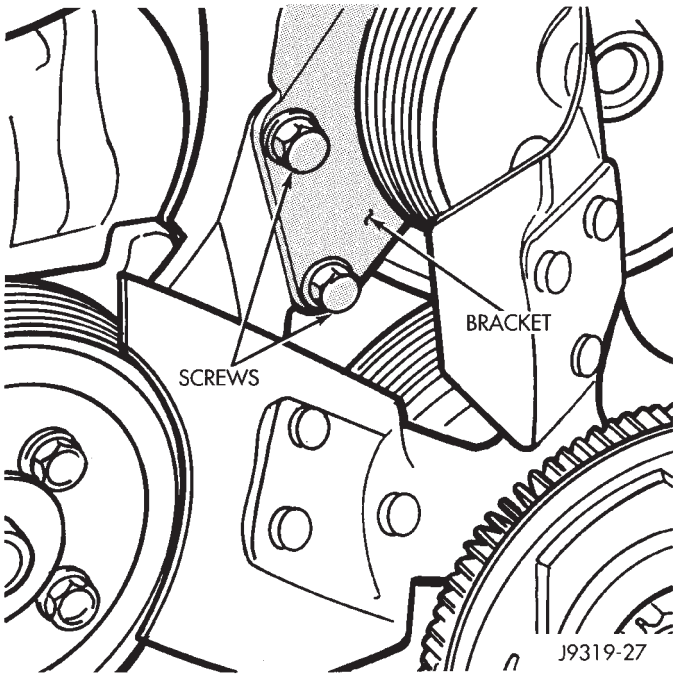

Fig. 9 Front Bracket

(2) Remove belt tension, turn tensioner clock-wise and slip belt off pulley (Fig. 6).

(3) Remove the screws retaining front bracket and pump to the rear bracket (Fig. 7, 8).

(4) Remove screws that attach the front bracket to the rear bracket (Fig. 9).

(5) Remove pump from bracket.

To remove the rear bracket from engine, the air conditioning compressor and bracket must be removed first. Refer to Group 24, Heating and Air Conditioning for removal procedures.

(6) Remove fan from pulley and hub on rear bracket.

(7) Remove 4 screws attaching the rear bracket to block (Fig. 10, 11).

(8) Remove bracket from engine.

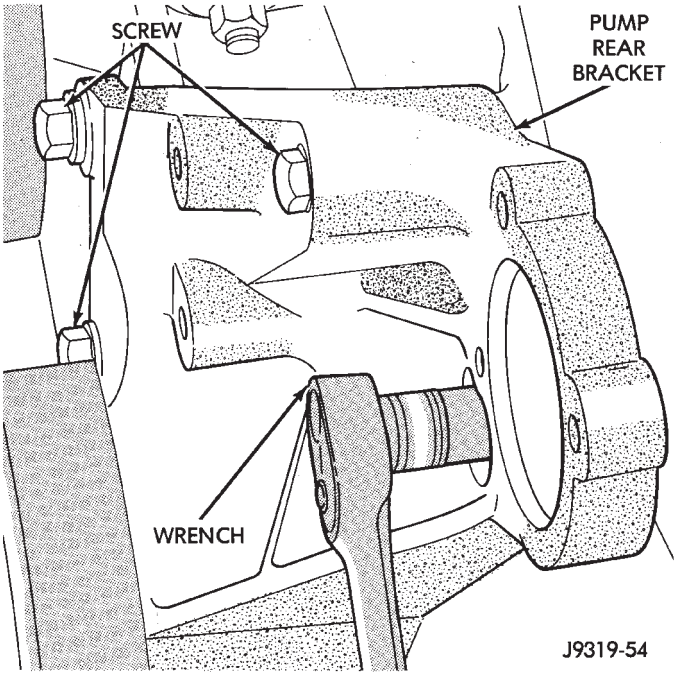

Fig. 10 Rear Bracket (Front View)

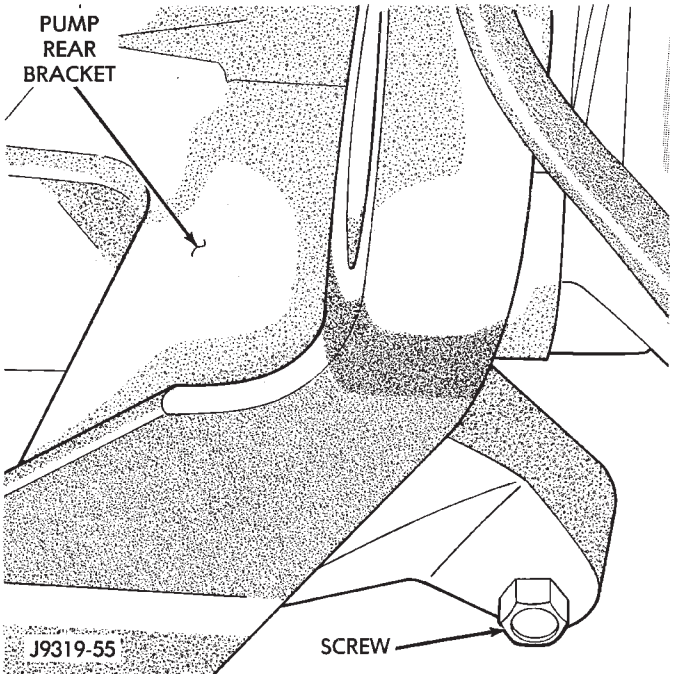

Fig. 11 Rear Bracket (Side View)

INSTALLATION

(1) Install the rear bracket to engine. Install screws finger tight.

(2) Tighten front screws to 48 N·m (35 ft. lbs.) torque. Tighten side screw to 48 N·m (35 ft. lbs.) torque. It is important to torque the front screws FIRST and the side screw LAST. This will prevent the bracket from twisting or distorting.

(3) Install fan to pulley and hub. Tighten the nuts to 27 N·m (20 ft. lbs.) torque.

(4) Install air conditioning bracket and compressor to engine. Refer to Group 24, Heating and Air Conditioning for installation procedures.

(5) Loose assemble screws through front bracket, pump and into rear bracket.

(6) Install screws that attach the front bracket to the rear bracket (Fig. 8). Tighten the screws to 27 N·m (20 ft. lbs.) torque (Fig. 7).

(7) Install belt, turn tensioner clockwise and slip belt onto pulley (Fig. 6).

(8) Install pressure and return lines to pump. Refer to Pressure and Return Line Replacement in this section.

(9) After installation, add power steering fluid, inspect and test for fluid leaks. Refer to Power Steering Pump—Initial Operation.

TORQUE SPECIFICATIONS

POWER STEERING GEAR

DESCRIPTION	TORQUE
Adjustment Plug Initial Adjustment	109 N·m (80 ft. lbs.)
Adjustment Plug Locknut	109 N·m (80 ft. lbs.)
Adjustment Screw Locknut	49 N·m (36 ft. lbs.)
Coupler Shaft Pinch Bolts	47 N·m (35 ft. lbs.)
Gear to Frame Bolts (XJ)	95 N·m (70 ft. lbs.)
Gear to Frame Bolts (YJ)	106 N·m (78 ft. lbs.)
Pitman Arm (Shaft) Nut	251 N·m (185 ft. lbs.)
Return Guide Clamp Screw	58 N·m (43 in. lbs.)
Rack-Piston Plug	102 N·m (75 ft. lbs.)
Side Cover Bolts	60 N·m (44 ft. lbs.)

J9319-82

MANUAL STEERING GEAR

DESCRIPTION	TORQUE
Adjustment Locknut	68 N·m (50 ft. lbs.)
Adjustment Screw Locknut	34 N·m (25 ft. lbs.)
Return Guide Clamp Screw	14 N·m (10 in. lbs.)
Side Cover Bolts	61 N·m (45 ft. lbs.)
Adjustment Screw Locknut	34 N·m (25 ft. lbs.)
Gear to Frame Bolts (XJ)	95 N·m (70 ft. lbs.)
Gear to Frame Bolts (YJ)	106 N·m (78 ft. lbs.)

J9319-83

STEERING LINKAGE—XJ

DESCRIPTION	TORQUE
Drag Link to Steering Knuckle Nut	47 N·m (35 ft. lbs.)
Drag Link to Pitman Arm Nut	74 N·m (55 ft. lbs.)
Drag Link Adjustment Clamp Nut	49 N·m (36 ft. lbs.)
Pitman Arm (Shaft) Nut	251 N·m (185 ft. lbs.)
Steering Dampener to Axle Bracket Nut	74 N·m (55 ft. lbs.)
Steering Dampener to Drag Link Nut	74 N·m (55 ft. lbs.)
Tie Rod to Steering Knuckle Nut	47 N·m (35 ft. lbs.)
Tie Rod Clamp Nut	27 N·m (20 ft. lbs.)

J9319-84

STEERING LINKAGE—YJ

DESCRIPTION	TORQUE
Drag Link to Tie Rod Nut	47 N·m (35 ft. lbs.)
Drag Link to Pitman Arm Nut	74 N·m (55 ft. lbs.)
Drag Link Adjustment Clamp Nut	27 N·m (20 ft. lbs.)
Pitman Arm (Shaft) Nut	251 N·m (185 ft. lbs.)
Steering Dampener to Axle Bracket Nut	74 N·m (55 ft. lbs.)
Steering Dampener to Tie Rod Nut	74 N·m (55 ft. lbs.)
Tie Rod to Steering Knuckle Nut	47 N·m (35 ft. lbs.)
Tie Rod Adjustment Clamp Nut	49 N·m (36 ft. lbs.)

J9319-85

POWER STEERING PUMP

DESCRIPTION	TORQUE
Bracket to Block Bolts	47 N·m (35 ft. lbs.)
Pump to Adjustment Bracket	28 N·m (21 ft. lbs.)
Flow Control Valve to Pump Body	75 N·m (55 ft. lbs.)
High Pressure Fluid Fitting at Pump and Gear	28 N·m (21 ft. lbs.)
Return Fluid Fitting at Gear	28 N·m (21 ft. lbs.)

J9319-86

STEERING COLUMN—XJ

DESCRIPTION	TORQUE
Steering Wheel to Column Shaft Nut	35 N·m (26 ft. lbs.)
Toe Plate Bolts/Nuts	8 N·m (66 in. lbs.)
Upper Bracket Support Nuts	30 N·m (22 ft. lbs.)
Support Plate to Column	20 N·m (180 in. lbs.)
Coupler Shaft to Column	30 N·m (22 ft. lbs.)

J9519-55

STEERING COLUMN—YJ

DESCRIPTION	TORQUE
Steering Wheel to Column Shaft Nut	34 N·m (25 ft. lbs.)
Toe Plate Bolts/Nuts	21 N·m (192 in. lbs.)
Upper Bracket Support Bolts	30 N·m (270 in. lbs.)
Support Plate to Column	30 N·m (270 in. lbs.)
Coupler Shaft to Column	30 N·m (22 ft. lbs.)

J9519-56

TRANSMISSION AND TRANSFER CASE

CONTENTS

	page		page
30RH/32RH AUTOMATIC TRANSMISSION	**67**	**NP231 TRANSFER CASE**	**283**
AW 4 AUTOMATIC TRANSMISSION	**165**	**NP242 TRANSFER CASE**	**306**
AX 15 MANUAL TRANSMISSION	**33**	**TRANSMISSION/TRANSFER CASE SPECIFICATIONS**	**333**
AX 4/5 MANUAL TRANSMISSION	**1**		

AX 4/5 MANUAL TRANSMISSION

INDEX

	page		page
Cleaning and Inspection	13	Transmission Assembly and Adjustment	16
Gear Ratios	2	Transmission Disassembly and Overhaul	5
General Information	1	Transmission Identification	2
Recommended Lubricant	2	Transmission Installation	5
Service Diagnosis	2	Transmission Removal	3
Shift Pattern	2		

GENERAL INFORMATION

The AX 4 is a four speed manual transmission. The AX 5 is a five speed manual transmission. Fifth gear in the AX 5 is an overdrive range. The shift mechanism in both models is integral and mounted in the shift tower portion of the adapter housing (Fig. 1). The AX 4/5 is used for 2.5L engine applications.

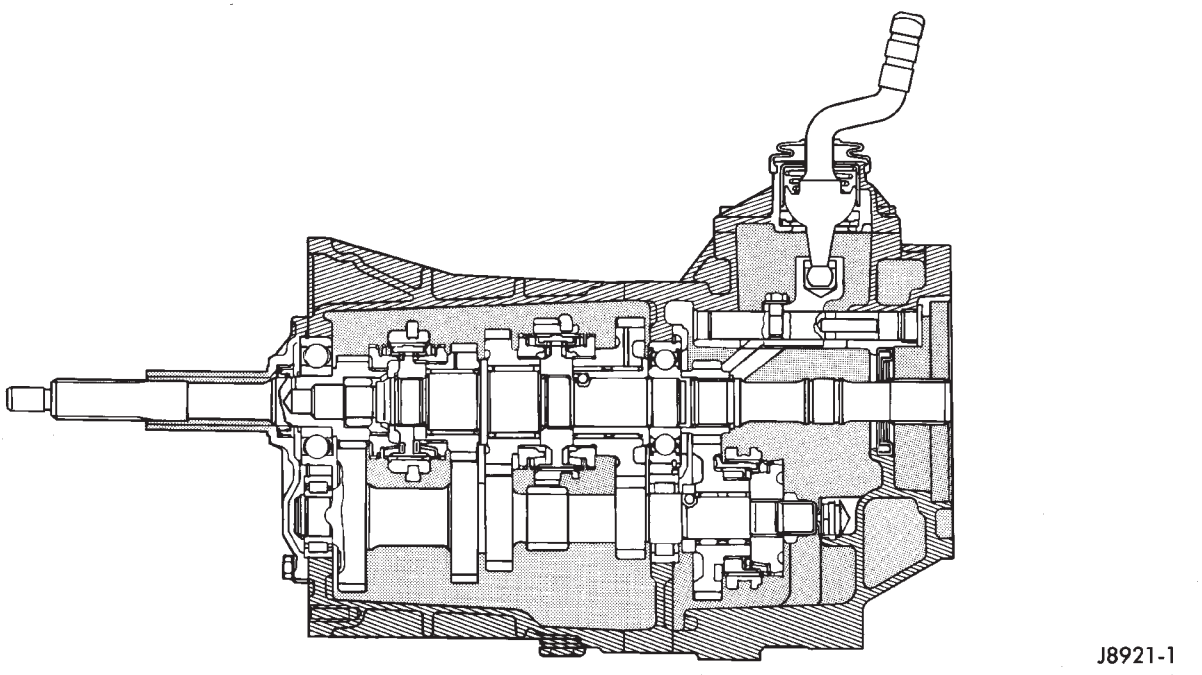

Fig. 1 AX 4/5 Manual Transmission

TRANSMISSION IDENTIFICATION

The AX 4/5 identification code is on the bottom surface of the transmission case near the fill plug (Fig. 2). The first number is year of manufacture. The second and third numbers indicate month of manufacture. The next series of numbers is the transmission serial number.

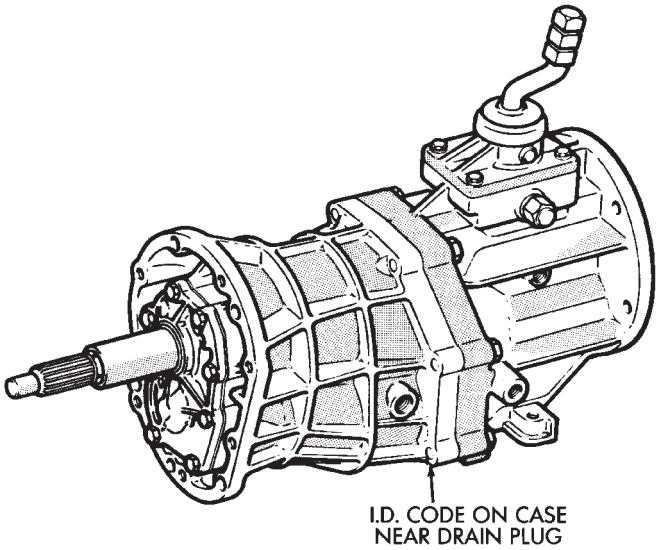

Fig. 2 Transmission Identification

GEAR RATIOS

Gear ratios for the AX 4 and AX 5 are as follows:

- First gear: 3.93:1
- Second gear: 2.33:1
- Third gear: 1.45:1
- Fourth gear: 1.00:1
- Fifth gear (AX 5): 0.85:1
- Reverse gear: 4.74:1

SHIFT PATTERN

The AX 4/5 first through fourth gear shift pattern is in a conventional H configuration. On the AX 5, fifth gear is up and to the right and reverse gear is down and to the right (Fig. 3).

RECOMMENDED LUBRICANT

Recommended lubricant for AX 4/5 transmissions is Mopar 75W-90, API Grade GL-5 gear lubricant, or equivalent.

Correct lubricant level is from the bottom edge, to no more than 6 mm (1/4 in.) below the bottom edge of the fill plug hole.

The fill plug is at the passenger side of the adapter housing Fig. 4). The drain plug is at the bottom of the case.

Approximate dry fill lubricant capacity is 3.3 liters (3.5 qts.).

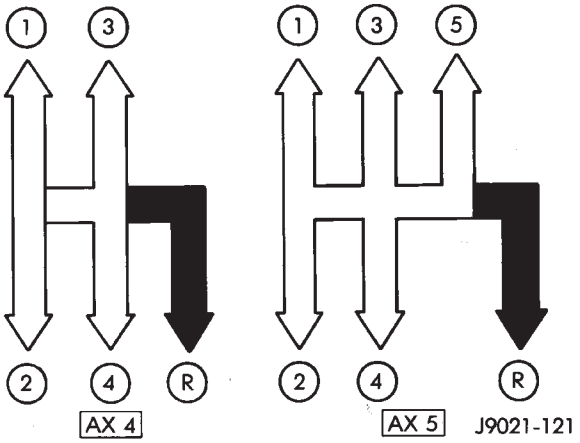

Fig. 3 AX 4/5 Shift Pattern

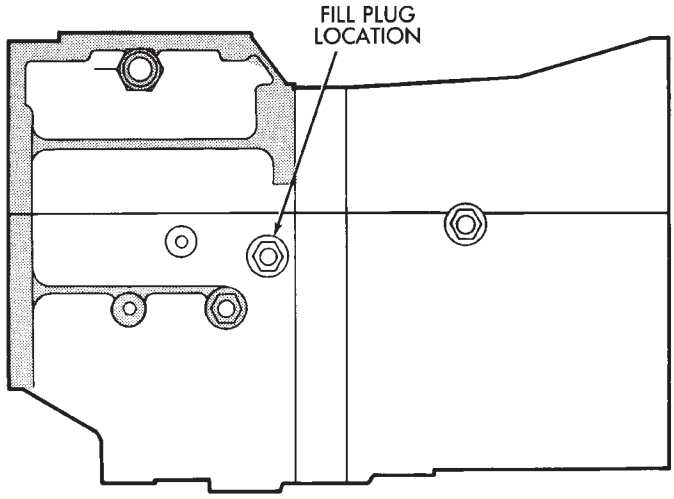

Fig. 4 Fill Plug Location

SERVICE DIAGNOSIS

LOW LUBRICANT LEVEL

A low transmission lubricant level is generally the result of a leak, inadequate lubricant fill, or an incorrect lubricant level check.

Leaks can occur at the mating surfaces of the gear case, intermediate plate and adaptor or extension housing, or from the front/rear seals. A suspected leak could also be the result of an overfill condition.

Leaks at the rear of the extension or adapter housing will be from the housing oil seals. Leaks at component mating surfaces will probably be the result of inadequate sealer, gaps in the sealer, incorrect bolt tightening, or use of a non-recommended sealer.

A leak at the front of the transmission will be from either the front bearing retainer or retainer seal. Lubricant may be seen dripping from the clutch housing after extended operation. If the leak is severe, it may also contaminate the clutch disc causing slip, grab and chatter.

Transmissions filled from air or electrically powered lubricant containers can be underfilled. This generally

happens when the container delivery mechanism is improperly calibrated. Always check the lubricant level after filling to avoid an under fill condition.

A correct lubricant level check can only be made when the vehicle is level; use a drive-on hoist to ensure this. Also allow the lubricant to settle for a minute or so before checking. These recommendations will ensure an accurate check and avoid an under-or-overfill condition.

HARD SHIFTING

Hard shifting is usually caused by a low lubricant level, improper or contaminated lubricants, component damage, incorrect clutch adjustment, or by a damaged clutch pressure plate or disc.

Substantial lubricant leaks can result in gear, shift rail, synchro and bearing damage. If a leak goes undetected for an extended period, the first indications of a problem are usually hard shifting and noise.

Incorrect or contaminated lubricants can also contribute to hard shifting. The consequence of using non-recommended lubricants is noise, excessive wear, internal bind and hard shifting.

Improper clutch release is a frequent cause of hard shifting. Incorrect adjustment or a worn, damaged pressure plate or disc can cause incorrect release. If the clutch problem is advanced, gear clash during shifts can result.

Worn or damaged synchro rings can cause gear clash when shifting into any forward gear. In some new or rebuilt transmissions, new synchro rings may tend to stick slightly causing hard or noisy shifts. In most cases, this condition will decline as the rings wear-in.

TRANSMISSION NOISE

Most manual transmissions make some noise during normal operation. Rotating gears generate a mild whine that is audible but only at extreme speeds.

Severe, highly audible transmission noise is generally the result of a lubricant problem. Insufficient, improper, or contaminated lubricant will promote rapid wear of gears, synchros, shift rails, forks and bearings. The overheating caused by a lubricant problem, can also lead to gear breakage.

TRANSMISSION REMOVAL

(1) Shift transmission into first or third gear. Then raise vehicle on hoist.

(2) Support engine with adjustable jack stand. Position wood block between jack and oil pan to avoid damaging pan.

(3) Disconnect necessary exhaust system components.

(4) Remove skid plate.

(5) Disconnect rear cushion and bracket from transmission (Fig. 5).

(6) Remove rear crossmember.

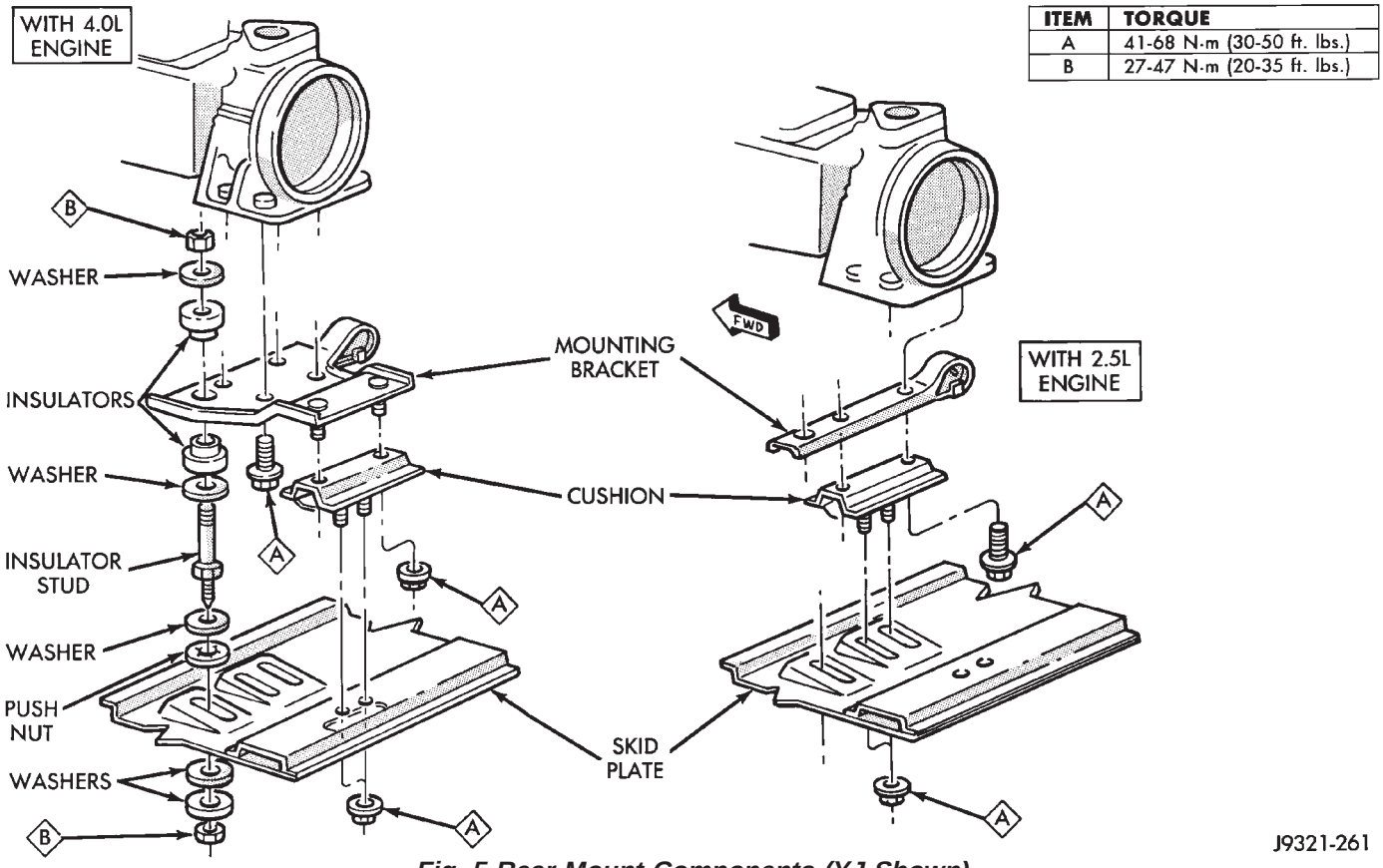

Fig. 5 Rear Mount Components (YJ Shown)

(7) Disconnect transfer case shift linkage at transfer case.

(8) Disconnect vehicle speed sensor wires and transfer case vent hose.

(9) Remove slave cylinder from clutch housing.

(10) Disconnect transmission shift lever as follows:

(a) Lower transmission-transfer case assembly approximately 7-8 cm (3 in.) for access to shift lever.

(b) Reach up and around transmission case and unseat shift lever dust boot from transmission shift tower (Fig. 6). Move boot upward on shift lever for access to retainer that secures lever in shift tower.

(c) Reach up and around transmission case and press shift lever retainer downward with your fingers. Turn retainer counterclockwise to release it.

(d) Lift lever and retainer out of shift tower (Fig. 6). **Do not remove the shift lever from the floorpan boots. Leave the lever in place for later transmission installation.**

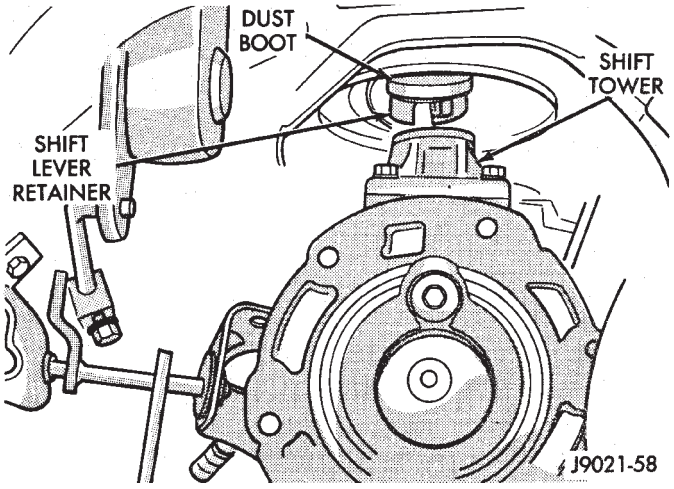

Fig. 6 Removing/Installing Shift Lever

(11) Mark front and rear propeller shafts for installation alignment (Fig. 7). Then remove both shafts.

(12) Remove crankshaft position position sensor (Figs. 8, 9).

CAUTION: It is important that the crankshaft position sensor be removed prior to transmission removal. The sensor can easily be damaged if left in place during removal operations.

(13) Unclip wire harnesses from transmission and transfer case.

(14) Remove slave cylinder from clutch housing.

(15) Support transmission with transmission jack.

(16) Remove nuts attaching transfer case to transmission and remove transfer case.

(17) Secure transmission to jack with safety chains.

(18) Remove clutch housing brace rod.

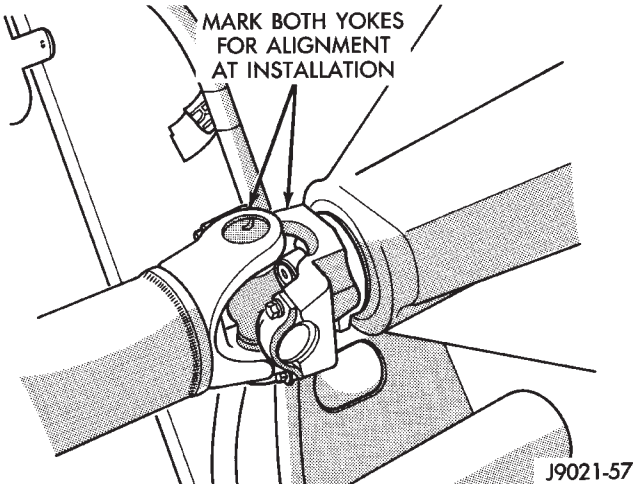

Fig. 7 Marking Propeller Shaft And Axle Yokes

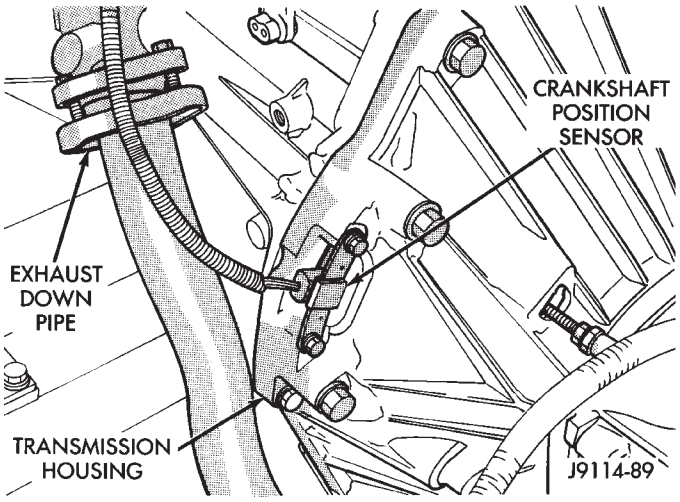

Fig. 8 Crankshaft Position Sensor (2.5L)

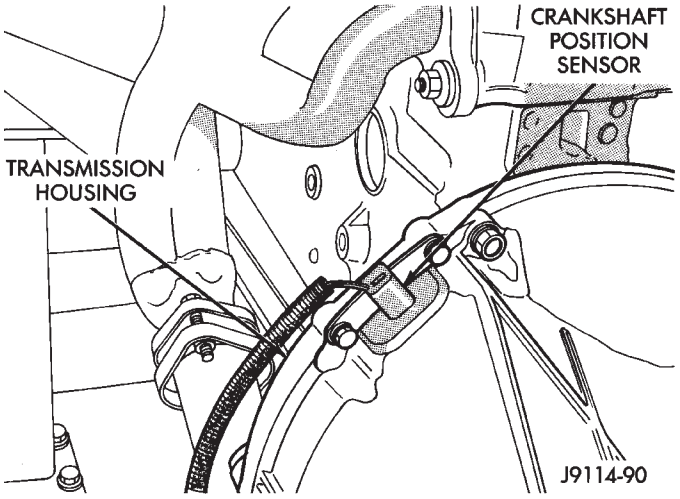

Fig. 9 Crankshaft Position Sensor (4.0L)

(19) Remove clutch housing-to-engine bolts.

(20) Pull transmission jack rearward until input shaft clears clutch. Then slide transmission out from under vehicle.

(21) Remove clutch release bearing, release fork and retainer clip.

(22) Remove clutch housing from transmission.

TRANSMISSION INSTALLATION

(1) Install clutch housing on transmission. Tighten housing bolts to 37 N·m (27 ft. lbs.) torque.

(2) Lubricate contact surfaces of release fork pivot ball stud and release fork with high temp grease. Then install release bearing, fork and retainer clip.

(3) Mount transmission on transmission jack.

(4) Lightly lubricate pilot bearing and transmission input shaft splines with Mopar high temp grease.

(5) Align transmission input shaft, release bearing, and clutch disc splines. Then slide transmission into place.

(6) Install and tighten clutch housing-to-engine bolts to 38 N·m (28 ft. lbs.) torque. **Be sure the housing is properly seated on engine block before tightening bolts.**

(7) Lower transmission approximately 7-8 cm (3 in.) for access to shift tower. Be sure transmission is in first or third gear.

(8) Reach up and around transmission and insert shift lever in shift tower. Press lever retainer downward and turn it clockwise to lock it in place. Then install lever dust boot on shift tower.

(9) Install slave cylinder in clutch housing.

(10) Align and install transfer case on and transmission. Tighten transfer case-to-transmission nuts to 35 N·m (26 ft. lbs.) torque.

(11) Connect transfer case vent hose and shift linkage. Check and adjust linkage if necessary.

(12) Connect transfer case vent hose.

(13) Secure wire harnesses in clips/tie straps on transmission and transfer case.

(14) Connect backup light switch wires.

(15) Connect vehicle speed sensor wires.

(16) Install and connect crankshaft position sensor.

(17) Install rear crossmember (Fig. 5). On XJ, tighten crossmember-to-frame bolts to 41 N·m (31 ft. lbs.) torque. Then tighten transmission-to-rear support bolts/nuts to 45 N·m (33 ft. lbs.) torque. On YJ, tighten bolts/nuts to indicated torque (Fig. 5).

(18) Remove jack stand.

(19) Align and install front/rear propeller shafts. Tighten shaft U-joint clamp bolts to 19 N·m (170 in. lbs.) torque.

(20) Install skid plate, if equipped. Tighten bolts to 42 N·m (31 ft. lbs.) torque. Tighten stud nuts to 17 N·m (150 in. lbs.) torque.

(21) Top off transmission and transfer case lubricant levels.

(22) Lower vehicle.

TRANSMISSION DISASSEMBLY AND OVERHAUL

ADAPTER HOUSING AND FRONT BEARING RETAINER REMOVAL

(1) Drain transmission lubricant.

(2) Remove release bearing and lever.

(3) Remove clutch housing bolts and remove housing.

(4) On 2-wheel drive models, remove vehicle speed sensor, speedometer adapter and speedometer driven gear. Then remove extension housing seal (Fig. 1).

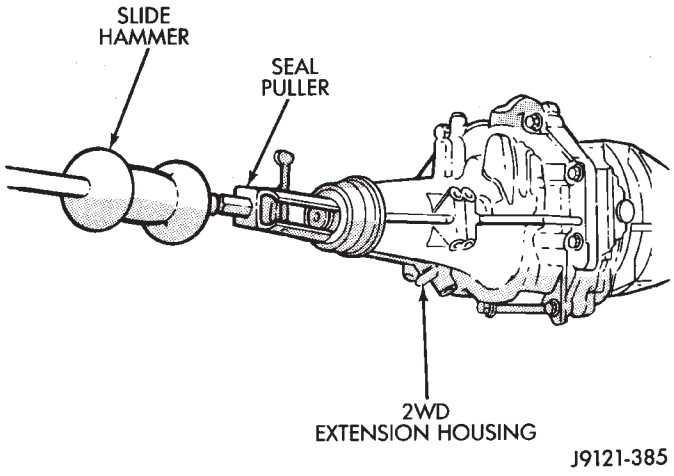

Fig. 1 Removing 2-Wheel Drive Extension Housing Seal

(5) Remove detent spring and ball. Remove detent plug (Fig. 2) and remove detent spring and ball with pencil magnet.

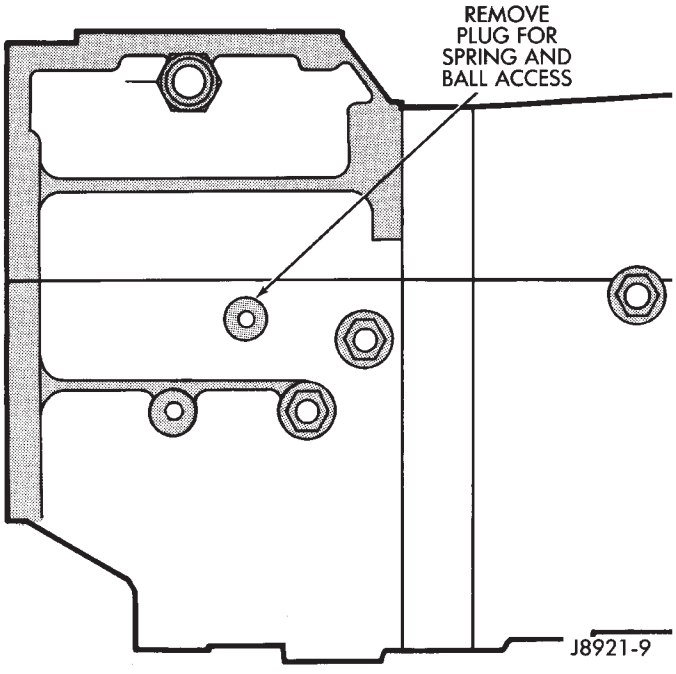

Fig. 2 Detent Ball Plug Location

(6) Remove shift arm set bolt (Fig. 3) and remove bolt and lockplate.

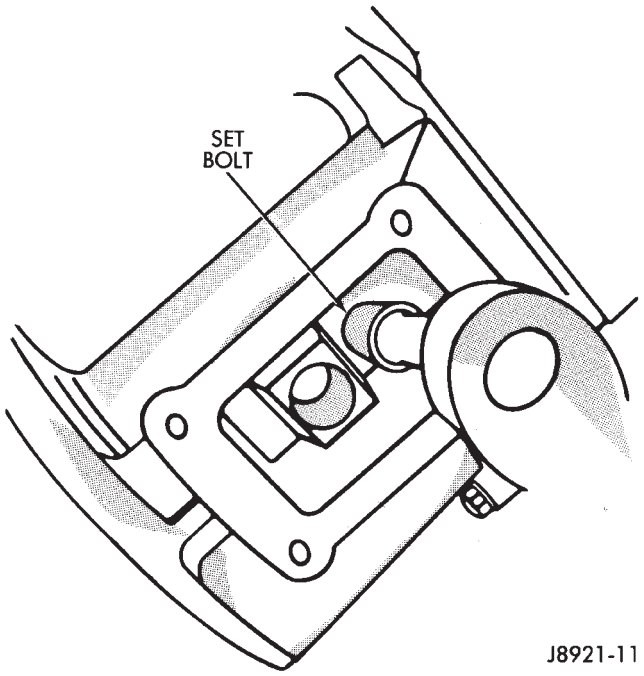

Fig. 3 Set Bolt Removal

(7) Remove shift lever shaft plug (Fig. 4). Then pull shaft out with large magnet.

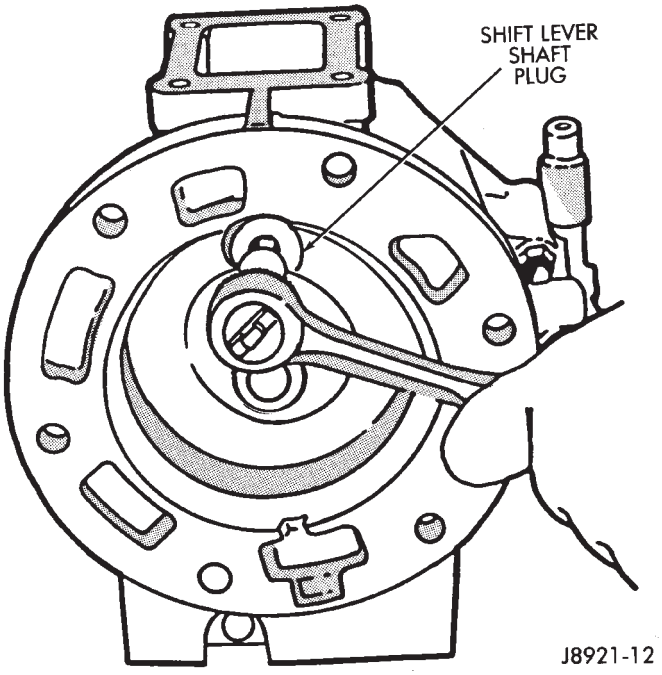

Fig. 4 Removing Shift Lever Shaft Plug

(8) Remove adapter housing bolts.

(9) Remove adapter housing by tapping it loose with plastic mallet.

(10) Remove front bearing snap rings (Fig. 5).

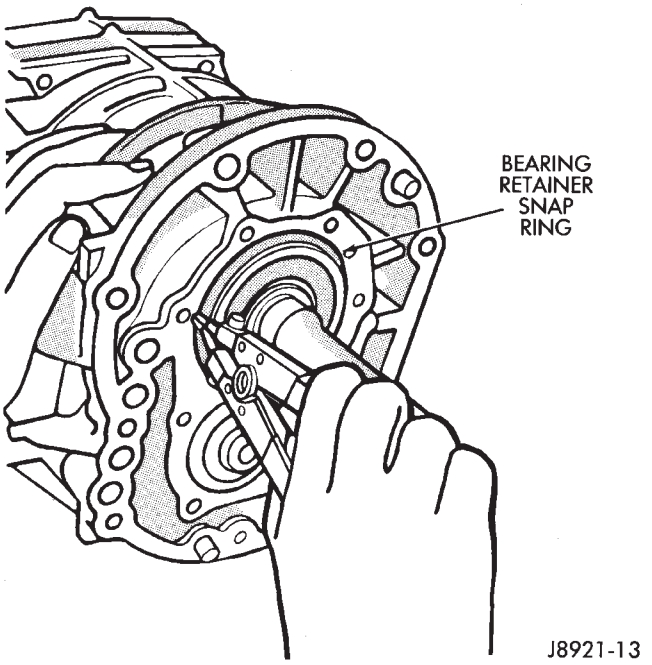

Fig. 5 Removing Bearing Retainer Snap Ring

(11) Remove front bearing retainer and intermediate plate by tapping them loose with plastic mallet (Fig. 6).

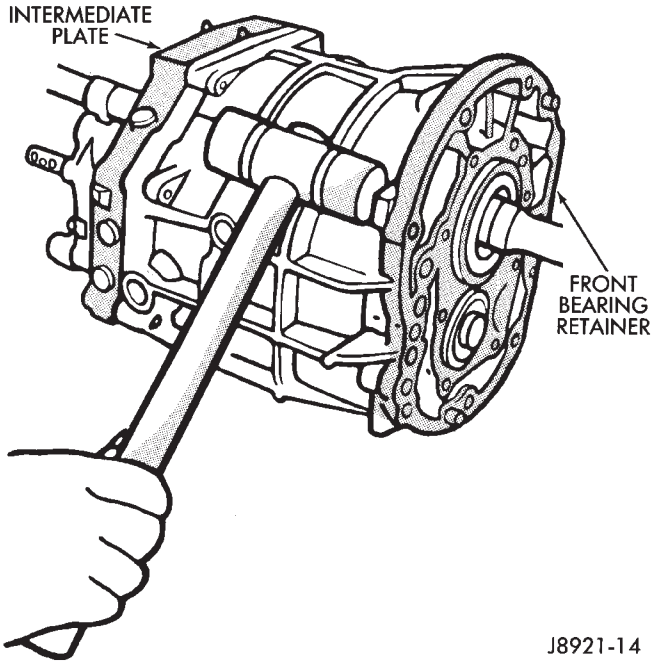

Fig. 6 Front Bearing Retainer And Intermediate Plate Removal

SHIFT MECHANISM DISASSEMBLY

(1) Install two clutch housing bolts and spare washers in intermediate plate (Fig. 7). Then clamp plate and gear assembly in vise. **Use enough washers to prevent bolts from touching. Also be sure vise jaws are clamped on bolt heads (Fig. 7).**

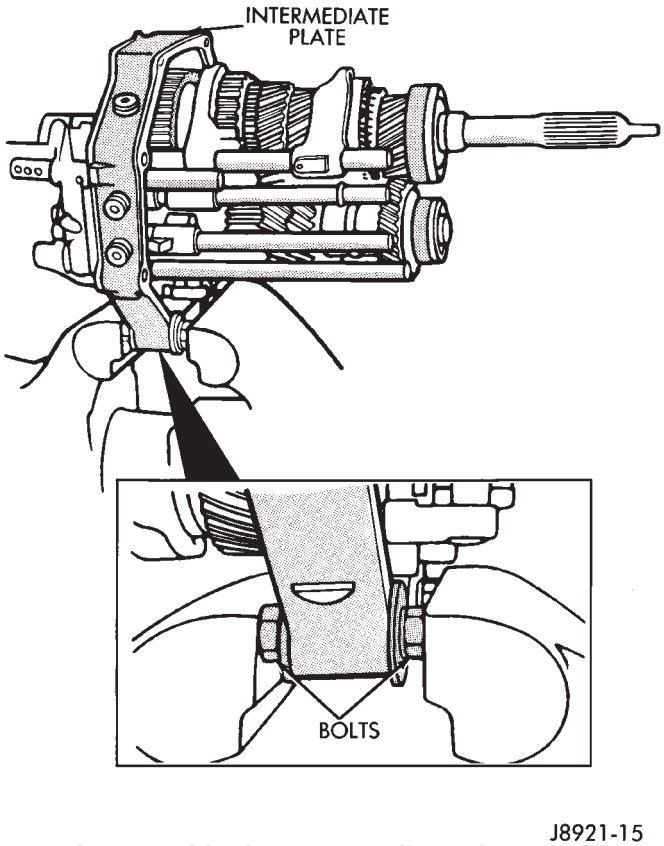

Fig. 7 Positioning Intermediate Plate In Vise

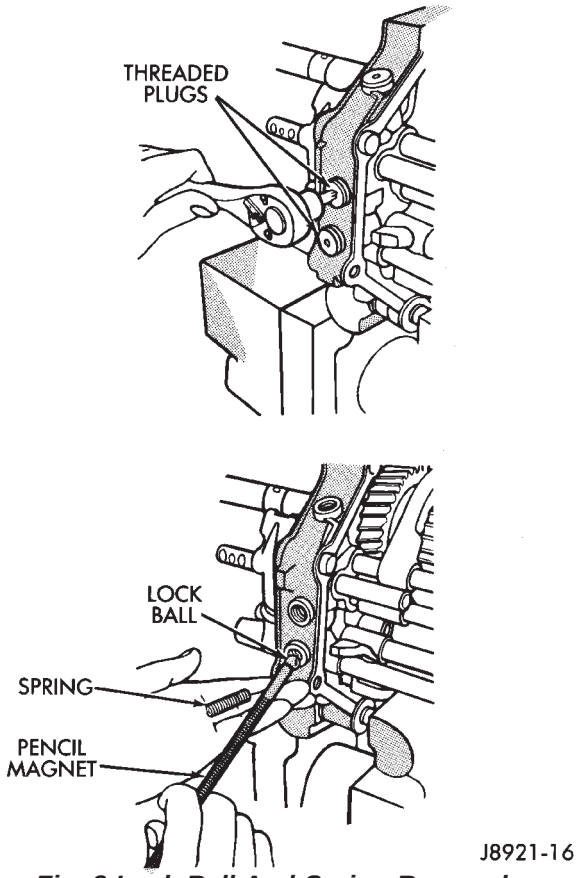

Fig. 8 Lock Ball And Spring Removal

(2) Remove threaded plugs from intermediate plate. Then remove lock ball and spring from plug holes with pencil magnet (Fig. 8).

(3) Remove shift fork pins with punch and hammer (Fig. 9).

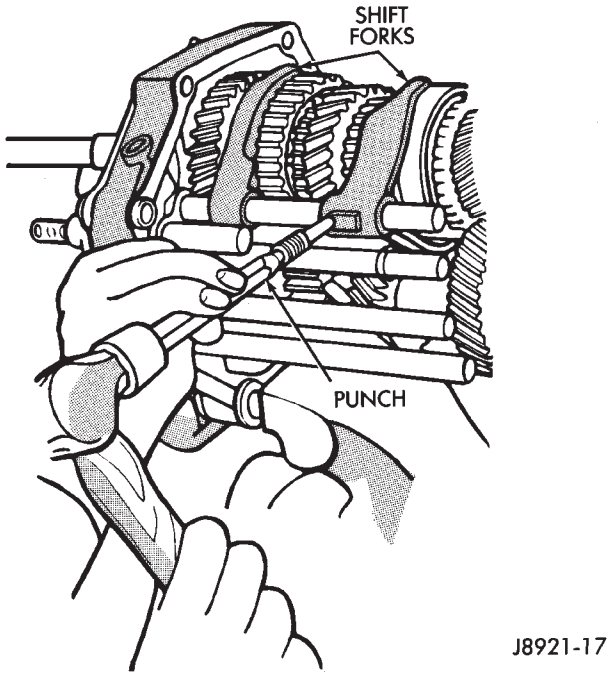

Fig. 9 Removing Shift Fork Pin

(4) Remove shift rail C-rings (Fig. 10).

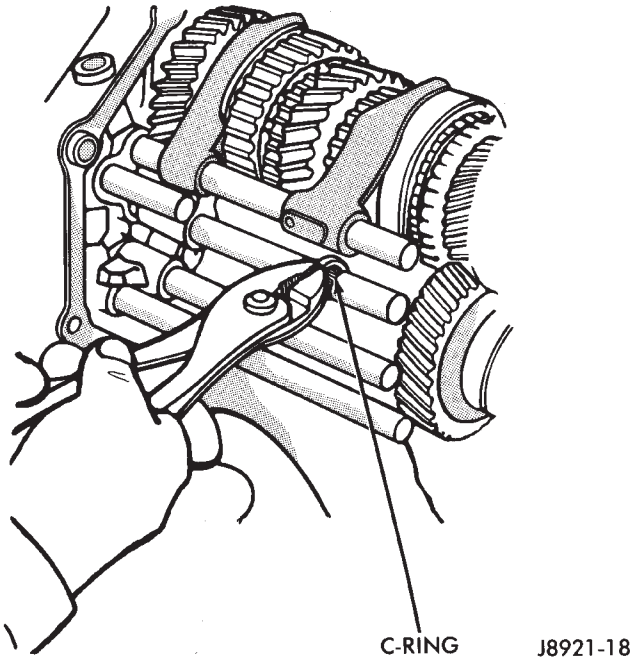

Fig. 10 Shift Rail C-Ring Removal

(5) Pull No. 4 shift rail outward and remove lock balls and pin (Fig. 11).

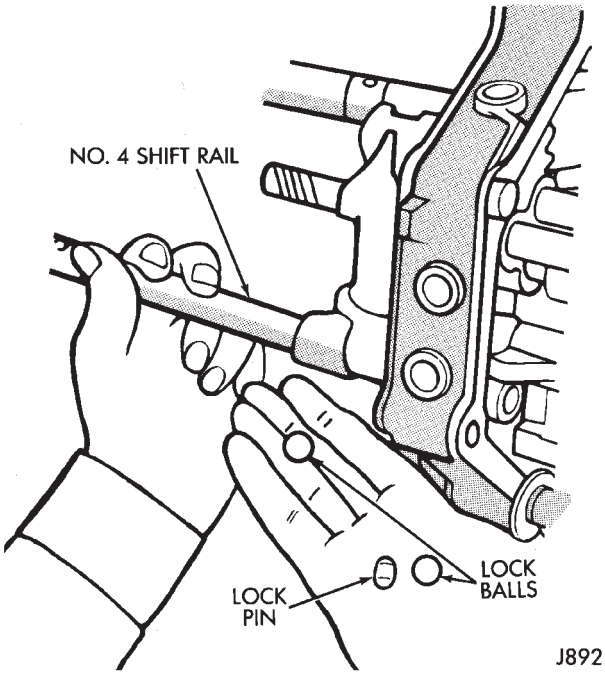

Fig. 11 Removing No. 4 Shift Rail, Lock Balls And Pin

(6) Remove No. 4 shift rail, fifth gear and No. 3 shift fork (Fig. 12).

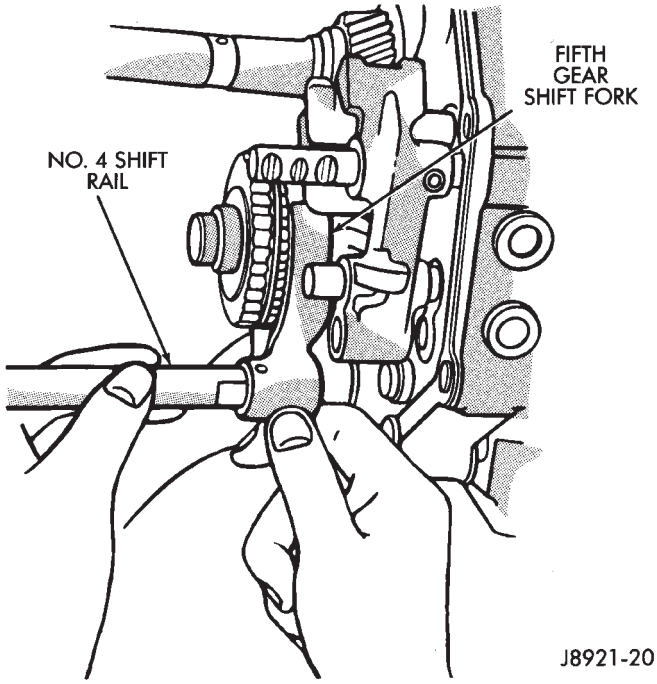

Fig. 12 Removing No. 4 Shift Rail And Fifth Gear Shift Fork

(7) Pull No. 5 shift rail and shift head out of plate (Fig. 13).

(8) Remove shift rail No.3. **Catch interlock pins as rail is removed (Fig. 14).**

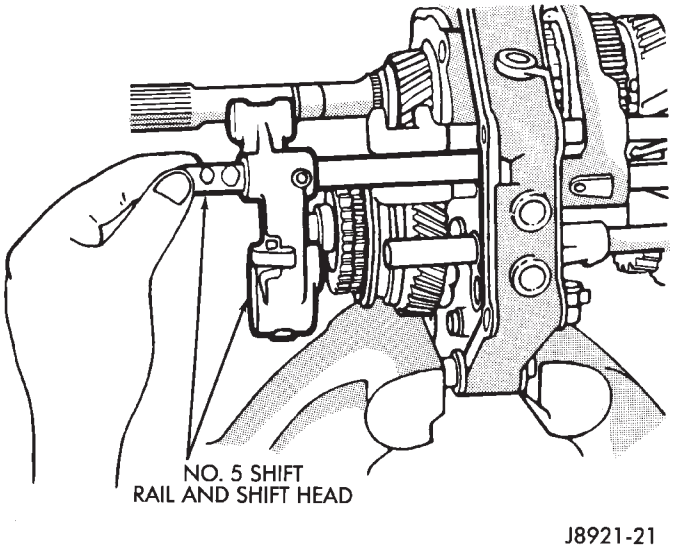

Fig. 13 Removing No. 5 Shift Rail And Shift Head

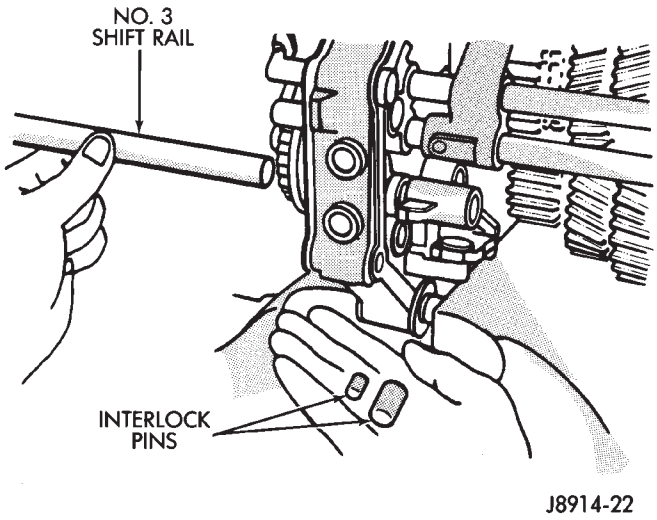

Fig. 14 Removing No. 3 Shift Rail And Interlock Pin

(9) Remove No. 1 shift rail and interlock pin (Fig. 15).

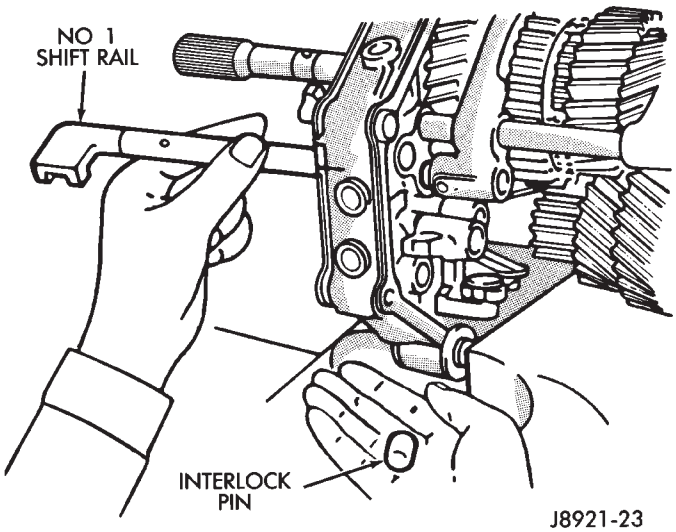

Fig. 15 Removing No. 1 Shift Rail And Interlock Pin

(10) Remove shift rail No. 2 and shift forks 1 and 2 (Fig. 16).

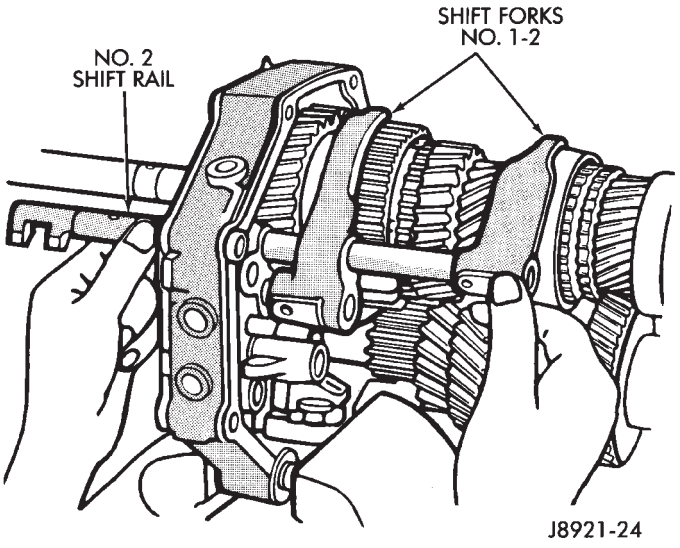

Fig. 16 Removing Shift Forks And No. 2 Shift Rail

(11) Remove reverse idler gear and shaft (Fig. 17).

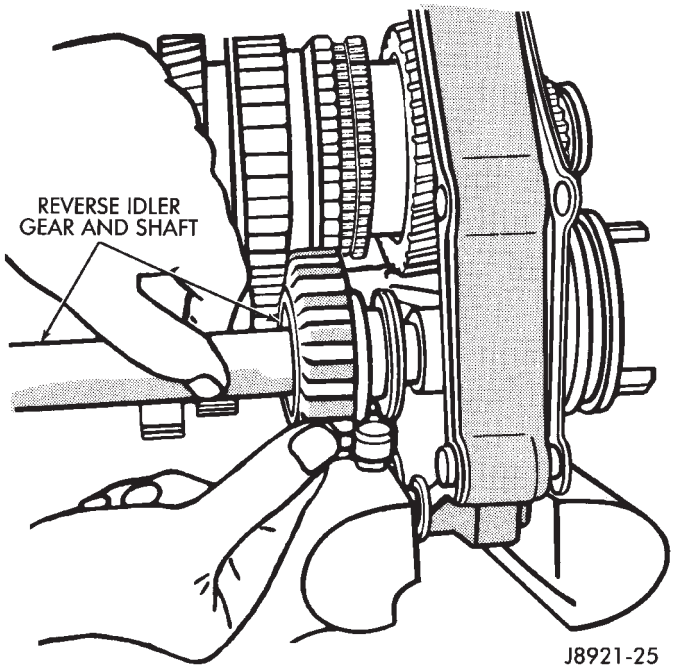

Fig. 17 Removing Reverse Idler Gear And Shaft

(12) Remove reverse shift arm and fork (Fig. 18).

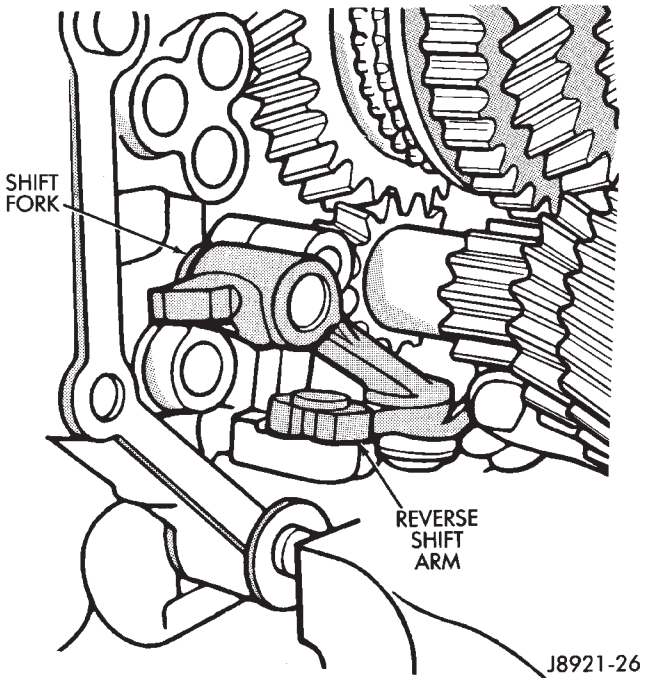

Fig. 18 Reverse Shift Arm Removal

MAINSHAFT DISASSEMBLY

(1) On AX 5, measure fifth counter gear thrust clearance with feeler gauge (Fig. 19). Clearance should be 0.10-0.30 mm (0.004-0.012 in.).

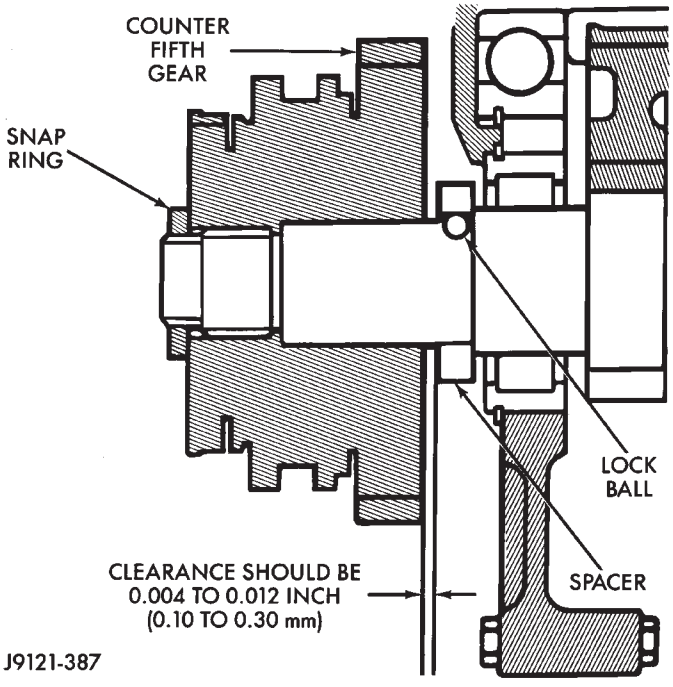

Fig. 19 Measuring Counter Fifth Gear Thrust Clearance

(2) Engage two synchro sleeves to lock mainshaft gears (Fig. 20).

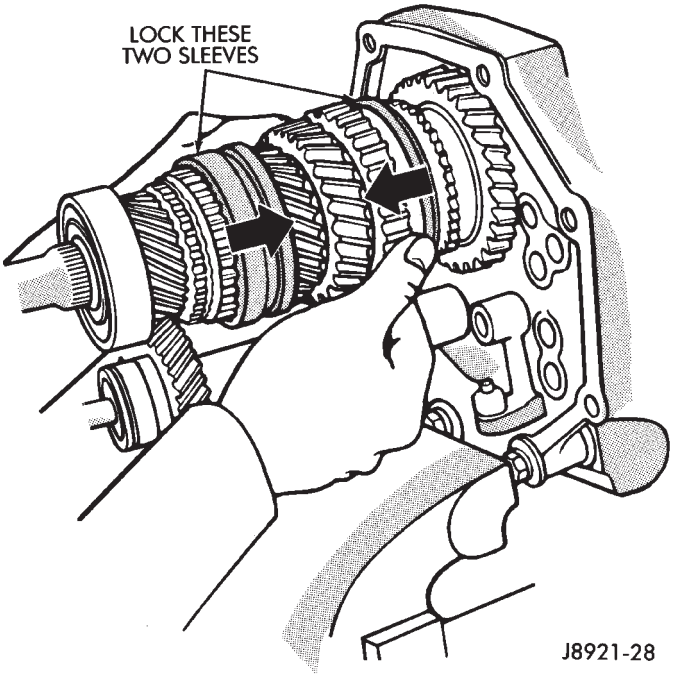

Fig. 20 Locking Mainshaft Gears

(3) On AX 4, remove counter gear nut and oil slinger. On AX 5, remove select fit snap ring that secures fifth spline gear and counter fifth gear on shaft (Fig. 21).

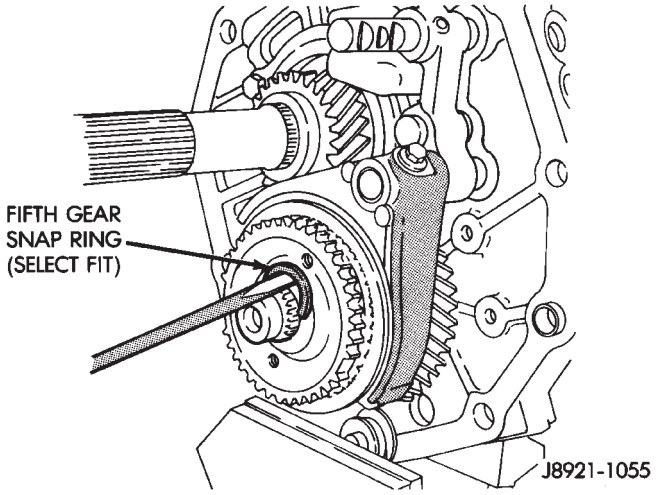

Fig. 21 Removing Fifth Gear Snap Ring

(4) Remove fifth spline gear, synchronizer and counter fifth gear with 2-, or 3-jaw puller (Fig. 22).

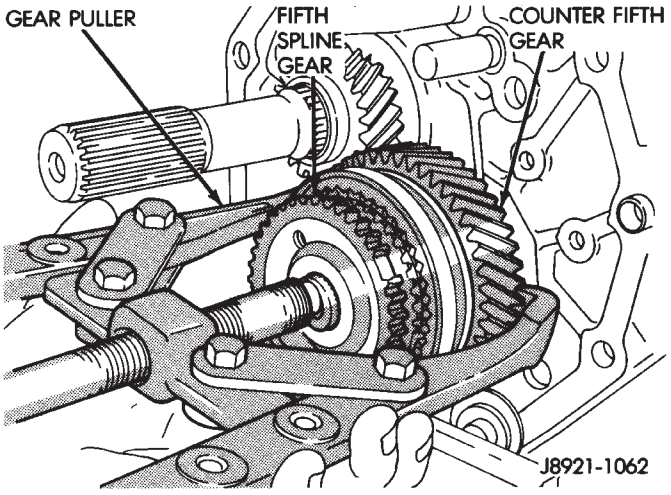

Fig. 22 Removing Fifth Gear Assembly

(5) Remove spacer and remove lock ball with pencil magnet (Fig. 23).

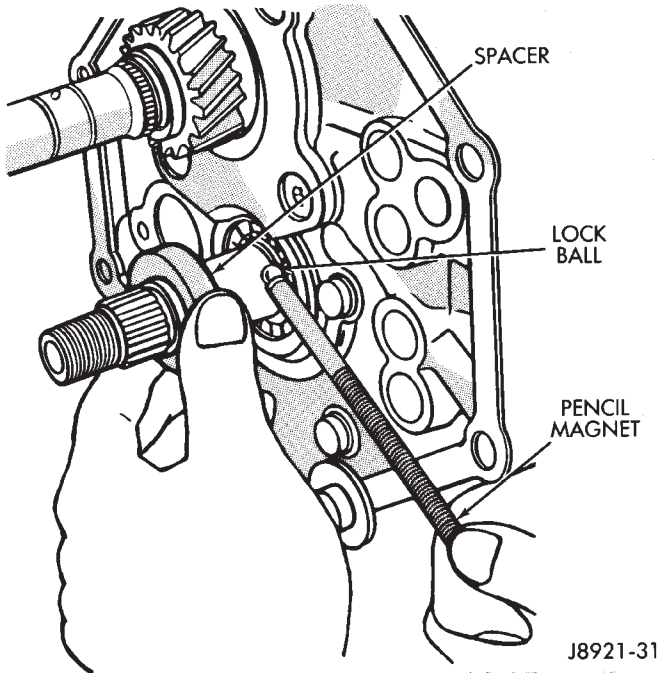

Fig. 23 Spacer And Lock Ball Removal

(6) Remove reverse shift arm bracket (Fig. 24).

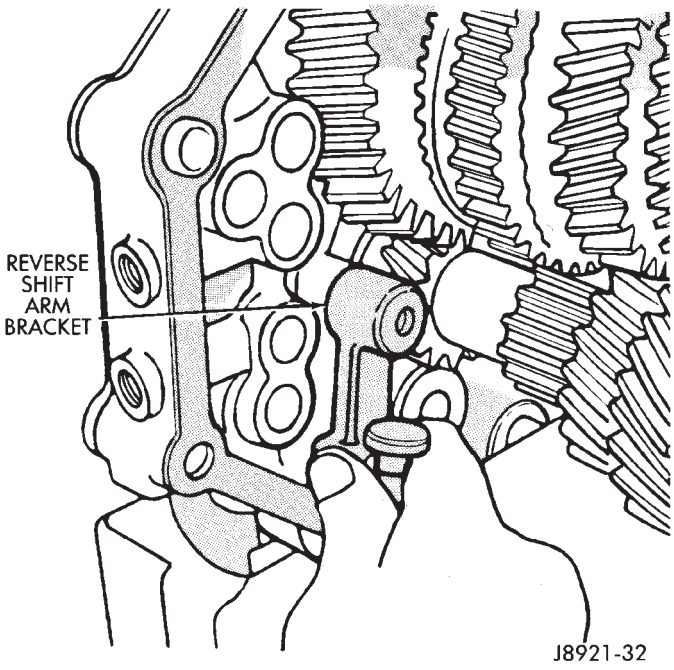

Fig. 24 Removing Reverse Shift Arm Bracket

(7) Remove rear bearing retainer bolts with appropriate size torx bit and remove retainer (Fig. 25).

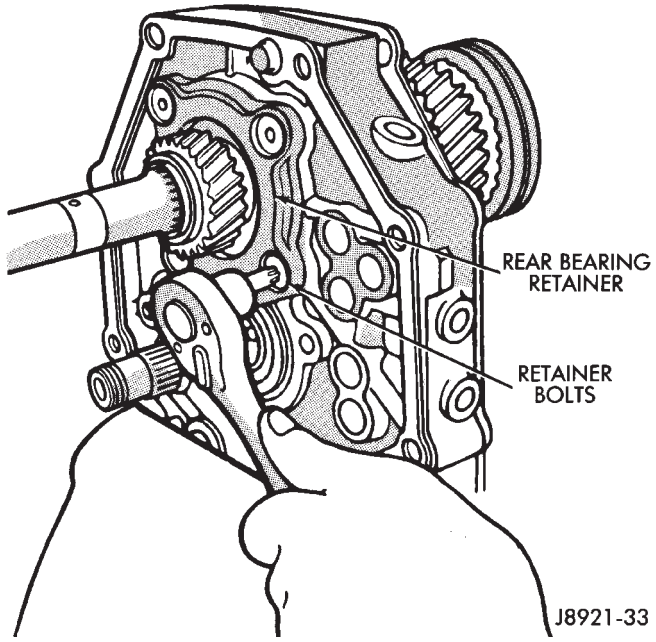

Fig. 25 Removing Rear Bearing Retainer

(8) Remove rear bearing snap ring (Fig. 26).

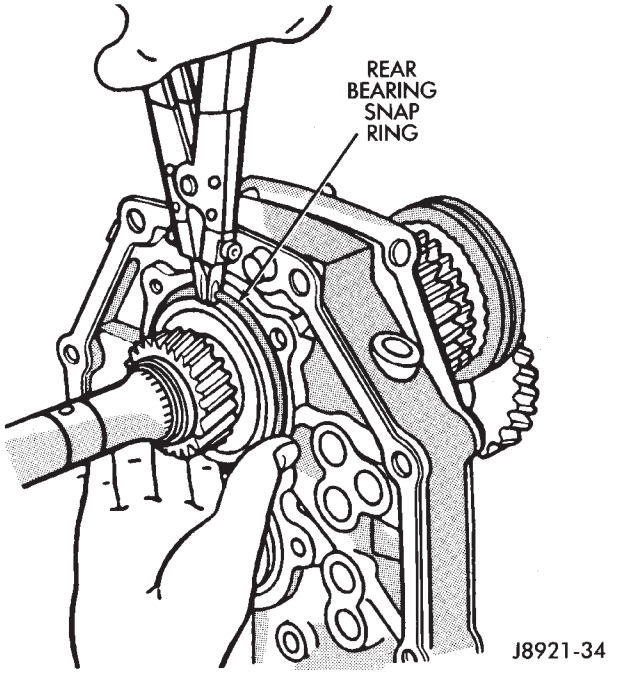

Fig. 26 Removing Rear Bearing Snap Ring

(9) Tap intermediate plate with plastic mallet and pull output shaft-counter gear assemblies out of plate (Fig. 27).

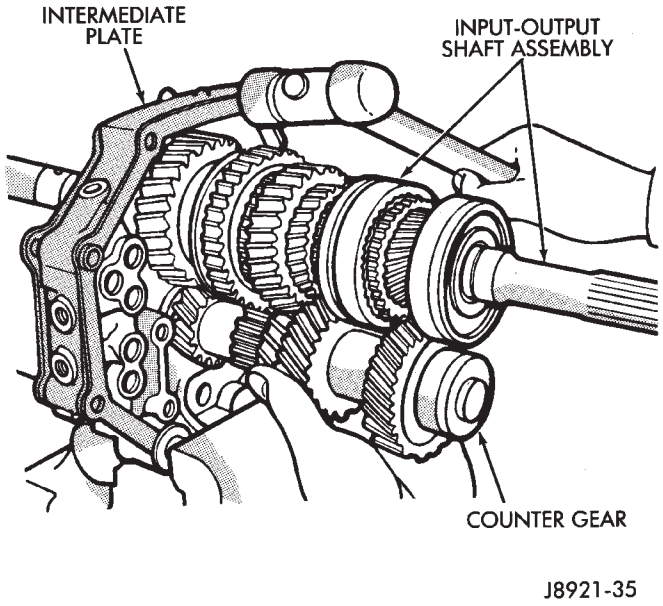

Fig. 27 Removing Counter Gear And Output Shaft

(10) Remove rear bearing from intermediate plate.

(11) Remove input shaft and shaft roller bearings from output shaft.

(12) Measure thrust clearance of output shaft gears (Fig. 28). Clearance should be 0.10 - 0.25 mm (0.004 - 0.010 in.).

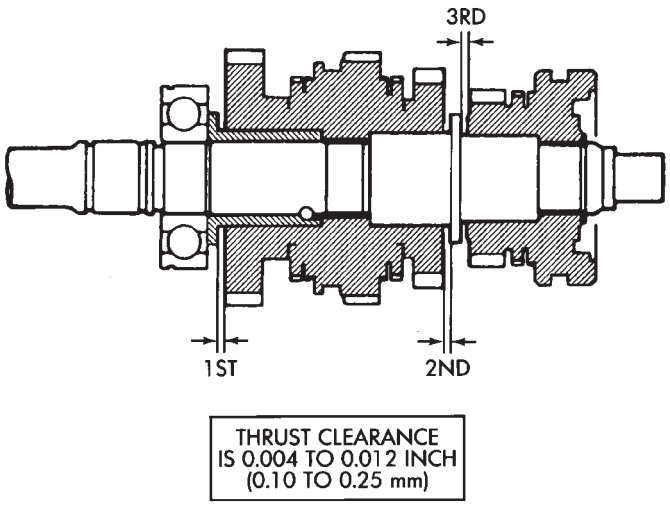

Fig. 28 Checking Output Shaft Gear Thrust Clearance

(13) Remove output shaft fifth gear snap ring with two screwdrivers (Fig. 29).

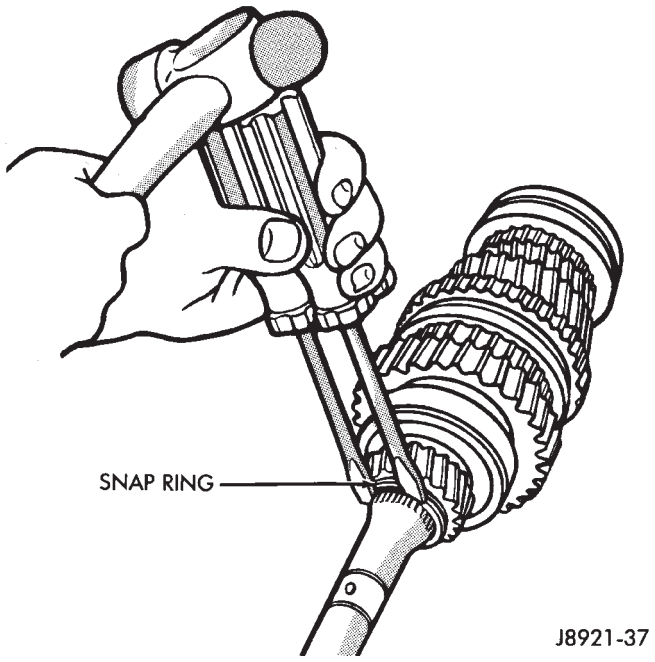

Fig. 29 Removing Fifth Gear Snap Ring

(14) Press fifth gear, rear bearing, first gear and inner race off output shaft (Fig. 30).

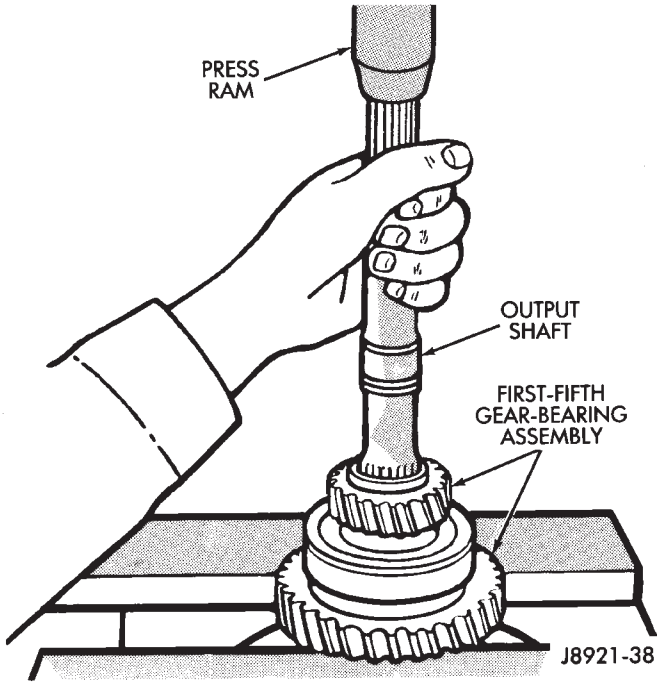

Fig. 30 Removing Fifth Gear And First Gear Bearing And Race

(15) Remove needle roller bearing.
(16) Remove synchronizer ring.
(17) Remove synchronizer lock ball with pencil magnet (Fig. 31).

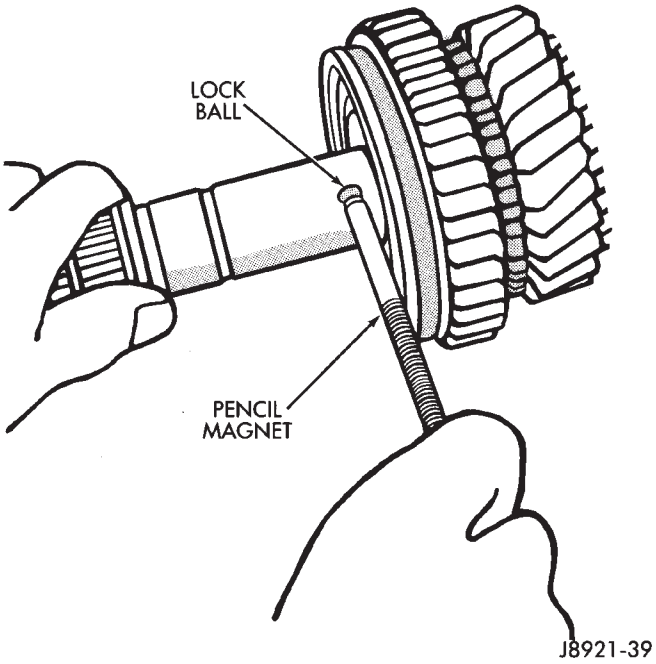

Fig. 31 Synchronizer Lock Ball Removal

(18) Press 1-2 synchronizer and second gear off output shaft (Fig. 32).

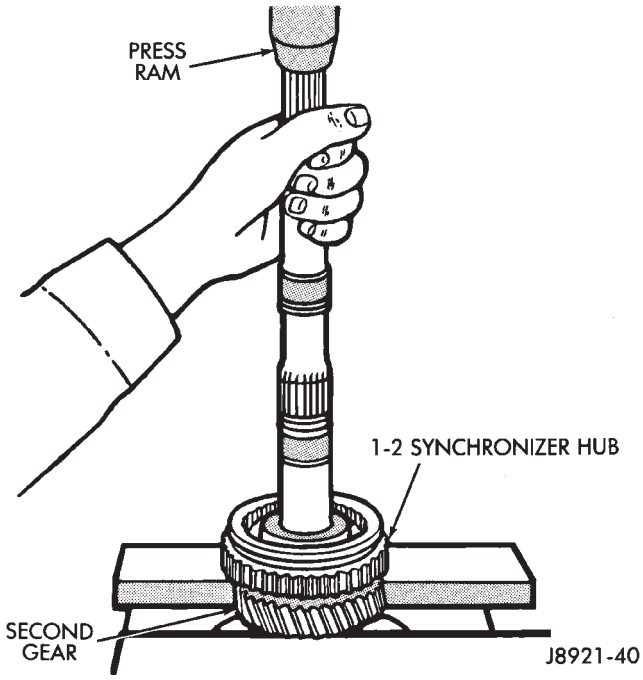

Fig. 32 Second Gear And 1-2 Synchronizer Removal

(19) Remove needle roller bearing from the shaft or second gear.

(20) Remove 3-4 synchronizer snap ring (Fig. 33).

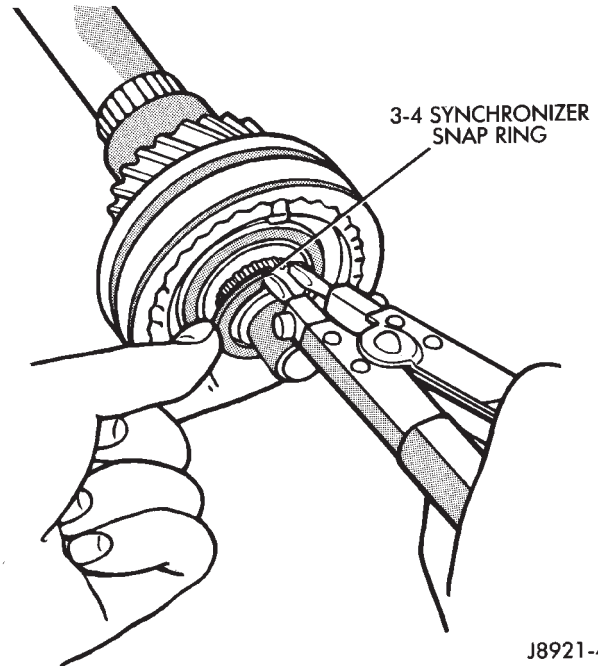

Fig. 33 Removing 3-4 Synchronizer Snap Ring

(21) Press 3-4 synchronizer and third gear off shaft (Fig. 34).

(22) Remove needle roller bearing from shaft or gear.

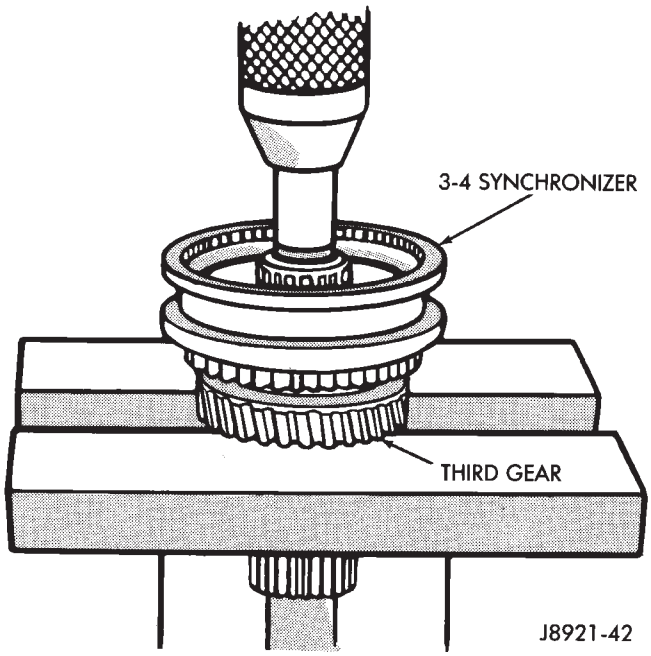

Fig. 34 Removing 3-4 Synchronizer And Third Gear

CLEANING AND INSPECTION

Clean the transmission components in solvent. Dry the cases, gears, shift mechanism and shafts with compressed air. **Dry the bearings with clean, dry shop towels only. Never use compressed air on the bearings. This could cause severe damage to the bearing roller and race surfaces.**

Inspect the transmission case. Replace the case if cracked, porous, or if any of the bearing and gear bores are damaged.

Check thickness of the output shaft and inner bearing race flanges with a micrometer or vernier calipers (Fig. 35).

- Minimum thickness for shaft flange is 4.8 mm (0.189 in.)
- Minimum thickness for bearing race flange is 3.99 mm (0.157 in.)

Measure diameter of the output shaft journal surfaces with a micrometer (Fig. 36). Replace the shaft if either of these surfaces are worn beyond specified limits.

- Second gear surface minimum diameter is 37.96 mm (1.495 in.)
- Third gear surface minimum diameter is 34.98 mm (1.377 in.)

Measure output shaft runout with a dial indicator (Fig. 37). Runout should not exceed 0.05 mm (0.002 in.).

Install the needle bearing and inner race in the first gear. Then check oil clearance between the gear and inner race (Fig. 38). Clearance should be 0.009 - 0.032 mm (0.0004 - 0.0013 in.).

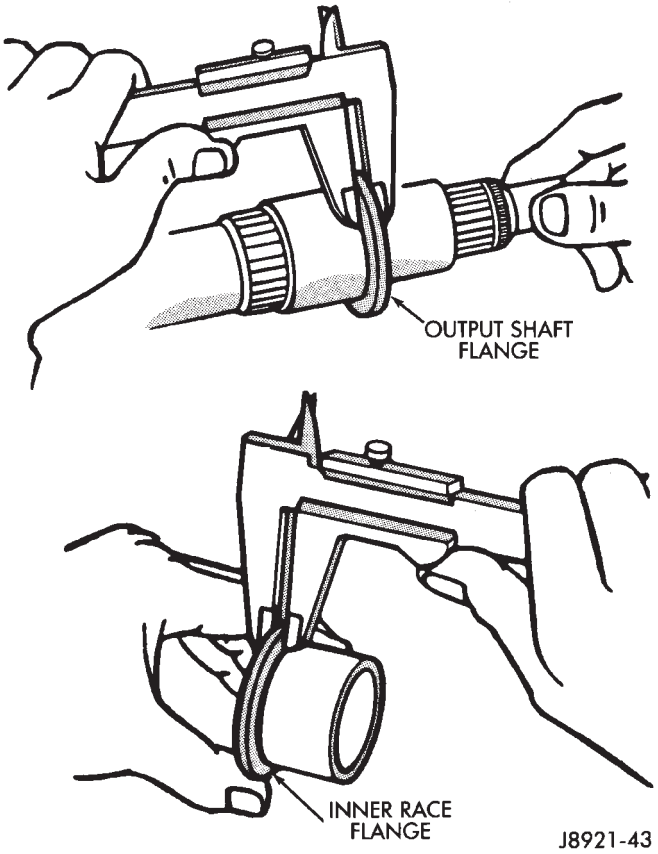

Fig. 35 Checking Shaft And Bearing Race Flange Thickness

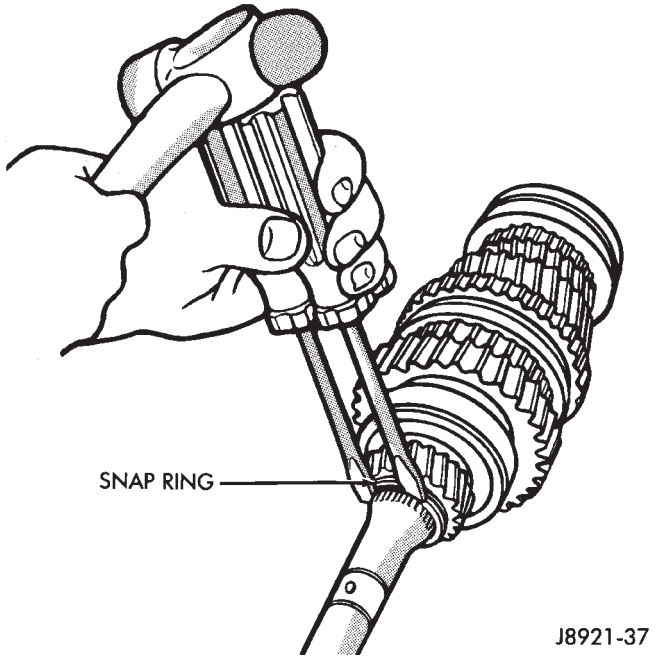

Fig. 36 Checking Shaft And Race Diameters

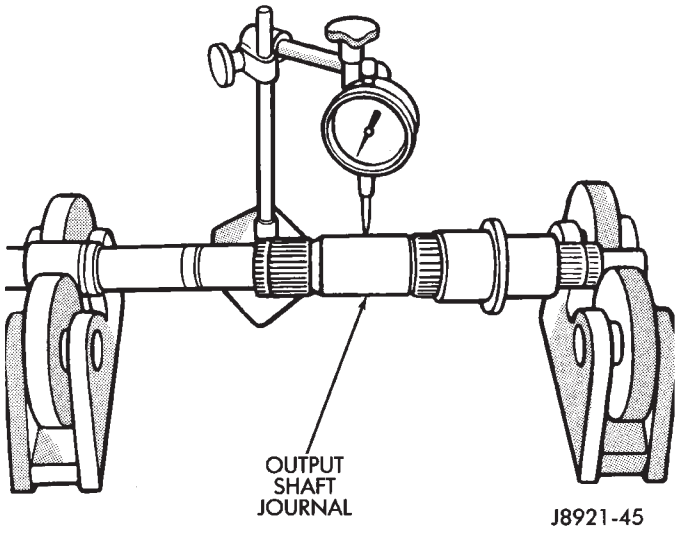

Fig. 37 Checking Output Shaft Runout

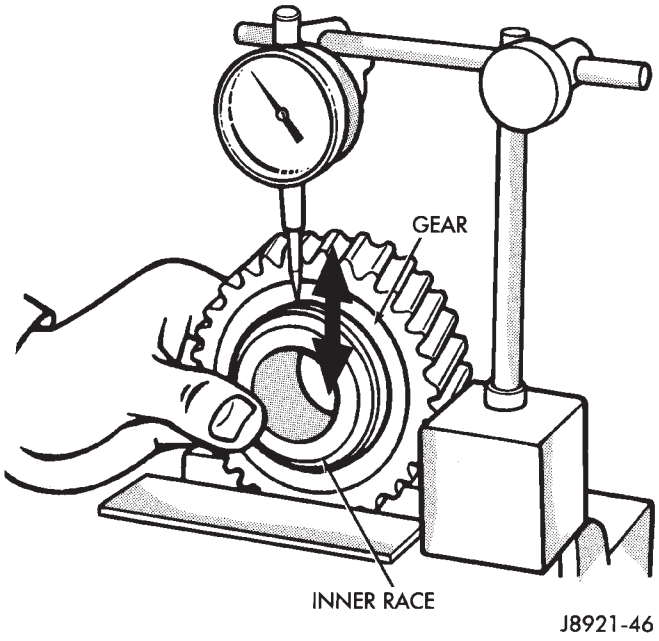

Fig. 38 Checking Gear-To-Race Clearance

Install the needle bearings and the second, third and counter fifth gears on the output shaft. Then check oil clearance between the gears and shaft with a dial indicator (Fig. 39). Oil clearance for all three gears is 0.009 - 0.0013 mm (0.0004 - 0.0013 in.).

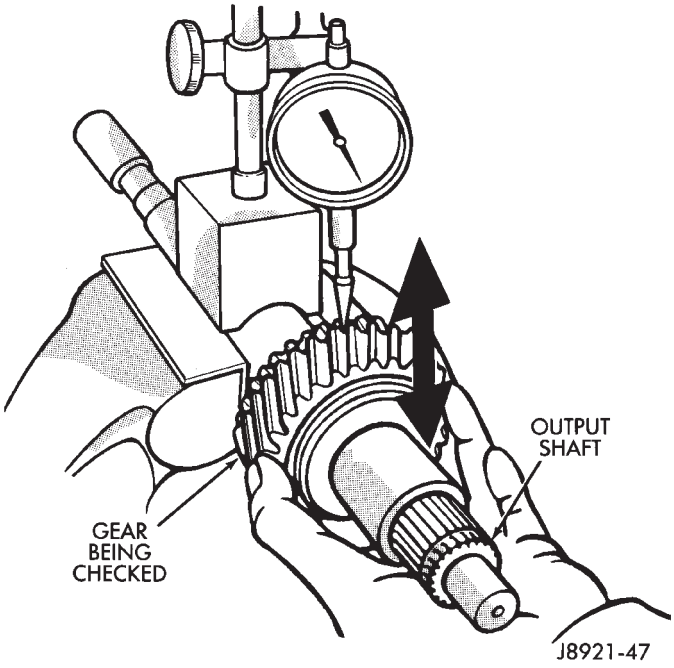

Fig. 39 Checking Gear-To-Shaft Oil Clearance

Check synchronizer ring wear (Fig. 40). Insert each ring in matching gear. Measure clearance between each ring and gear with feeler gauge. Replace ring if clearance exceeds 2.0 mm (0.078 in.).

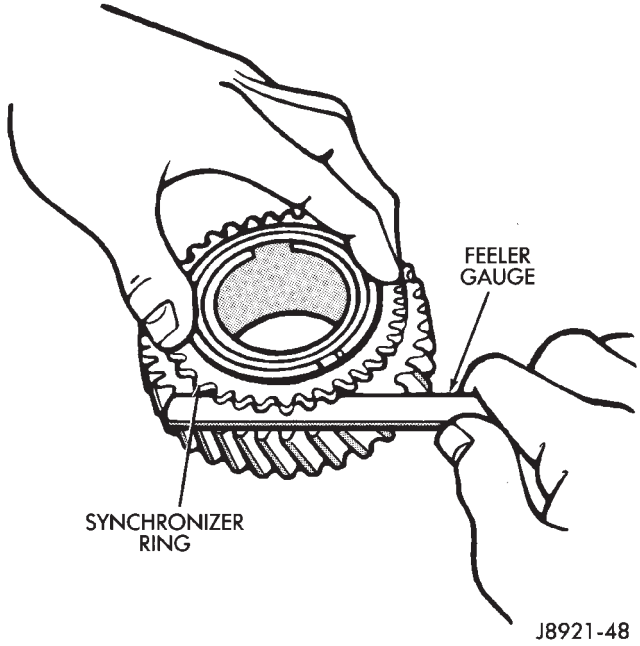

Fig. 40 Checking Synchronizer Ring Wear

Check shift fork-to-synchronizer hub clearance with a feeler gauge (Fig. 41). Replace the fork if clearance exceeds 1.0 mm (0.039 in.).

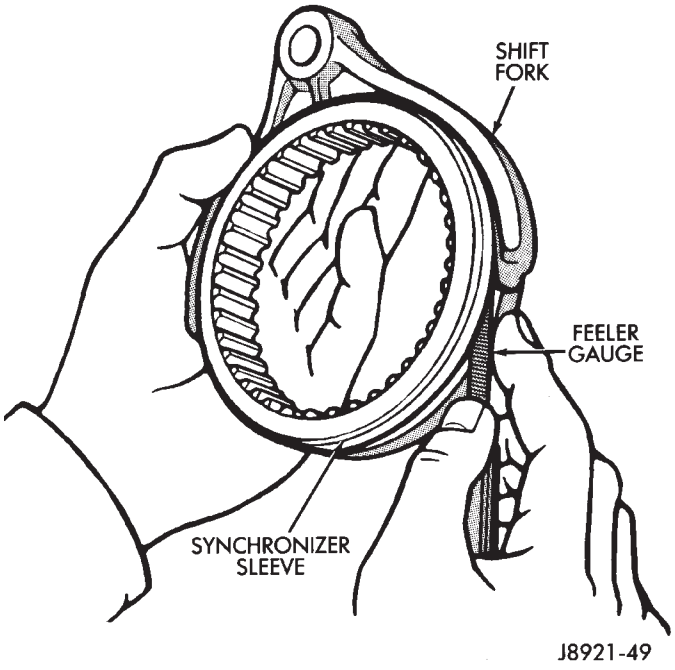

Fig. 41 Checking Fork-To-Hub Clearance

TRANSMISSION ASSEMBLY AND ADJUSTMENT

Lubricate the transmission components with Mopar 75W-90, GL 5 gear lubricant during assembly. Use petroleum jelly to lubricate seal lips and/or hold parts in place during installation.

Refer to the Counter Gear Comparison Chart (Fig. 42) during assembly for AX 4/5 gear differences.

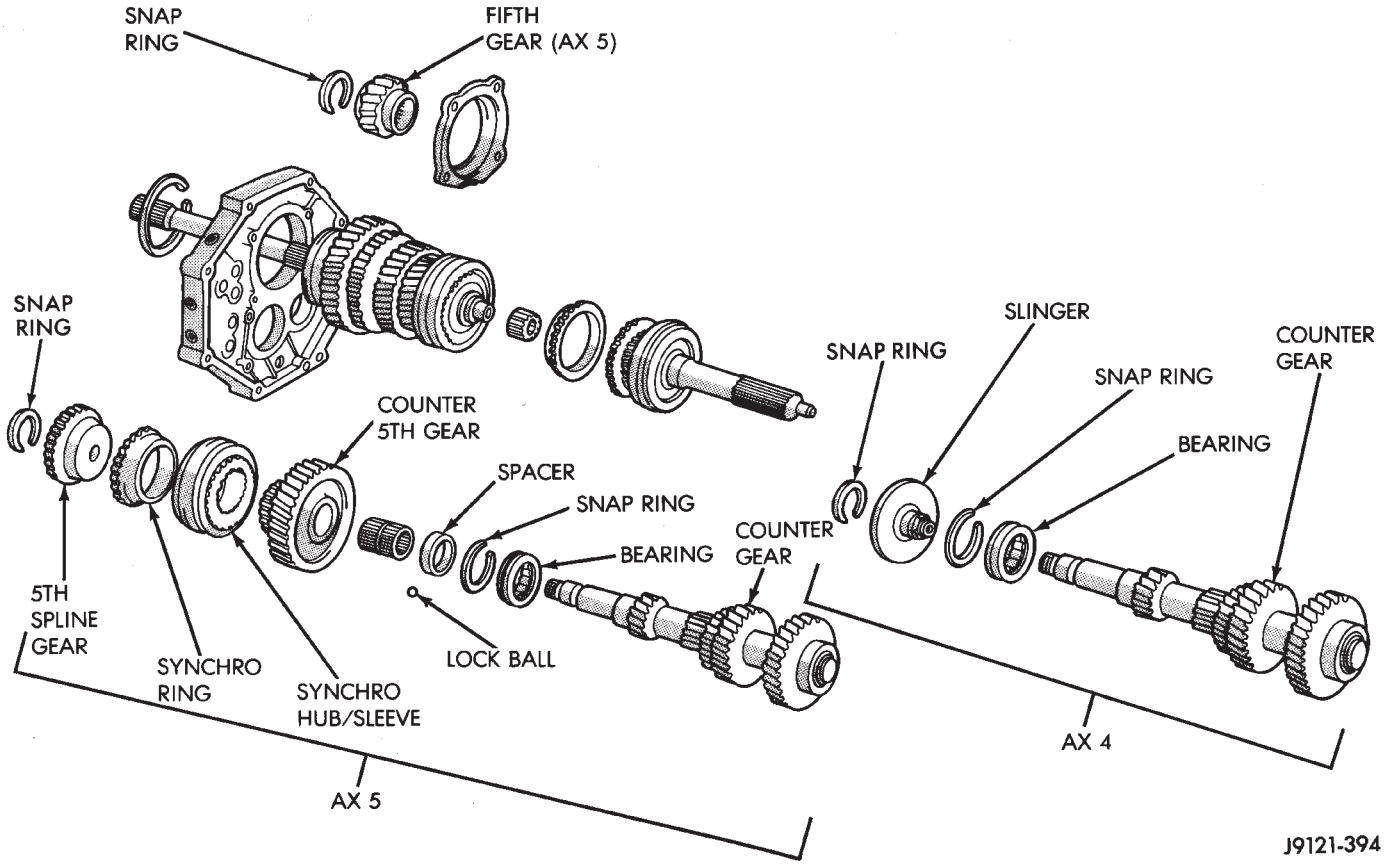

Fig. 42 Counter Gear Components

ASSEMBLING OUTPUT SHAFT, INPUT SHAFT AND COUNTER GEAR

(1) If front bearing was removed from input shaft, press new bearing on shaft (Fig. 43).

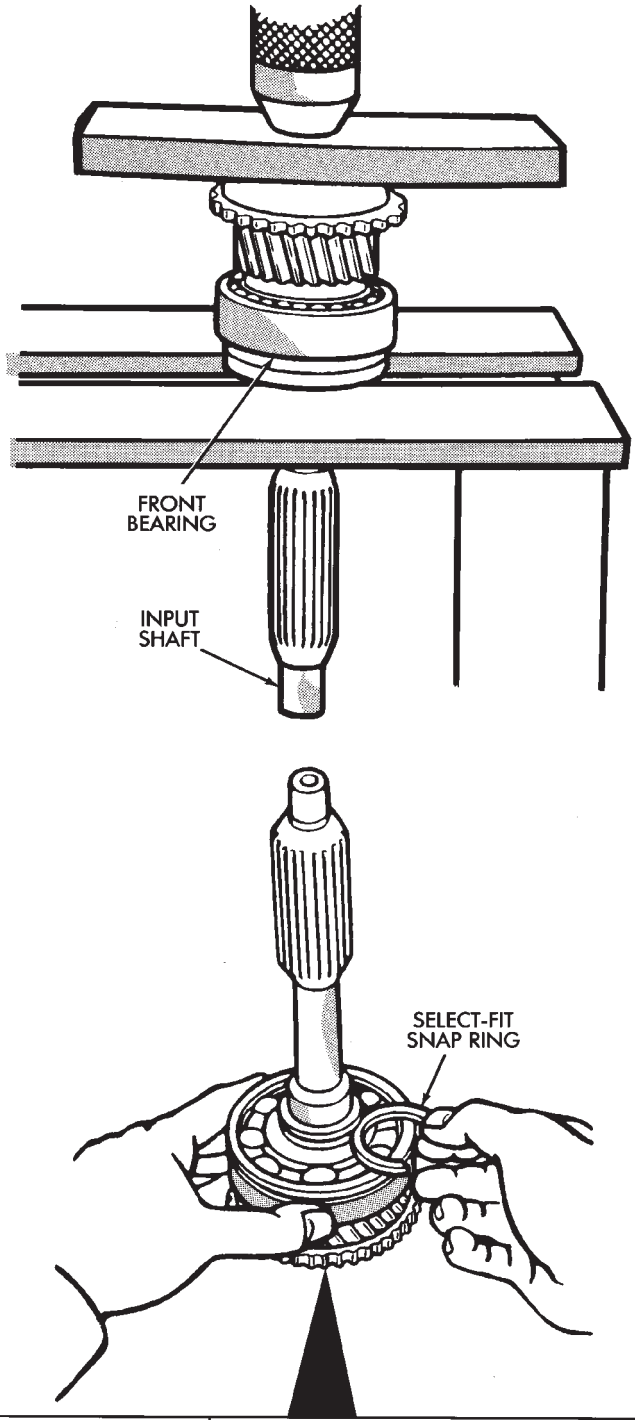

I.D. Mark	Snap Ring Thickness mm (in.)
0	2.05-2.10 (0.0807-0.0827)
1	2.10-2.15 (0.0827-0.0846)
2	2.15-2.20 (0.0846-0.0866)
3	2.20-2.25 (0.0866-0.0886)
4	2.25-2.30 (0.0886-0.0906)
5	2.30-2.35 (0.0906-0.0925)

J8921-50

Fig. 43 Installing Front Bearing And Snap Ring

(2) Secure front bearing with thickest snap ring that will fit in groove (Fig. 43).

(3) Press front bearing on counter gear. Secure bearing with thickest snap ring that will fit in ring groove (Fig. 44).

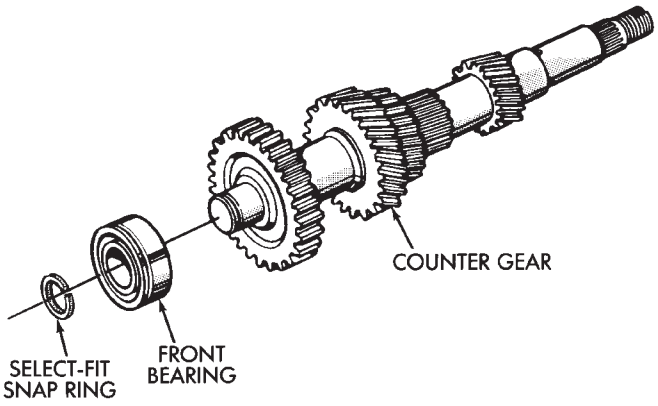

I.D. Mark	Snap Ring Thickness mm (in.)
1	2.05-2.10 (0.0807-0.0827)
2	2.10-2.15 (0.0827-0.0846)
3	2.15-2.20 (0.0846-0.0866)
4	2.20-2.25 (0.0866-0.0886)
5	2.25-2.30 (0.0886-0.0906)
6	2.30-2.35 (0.0906-0.0925)

J8921-51

Fig. 44 Installing Counter Gear Front Bearing And Snap Ring

(4) Install new oil seals in front bearing retainer and adapter (Fig. 45). Bearing retainer seal depth is 11.2 - 12.1 mm (0.441 - 0.480 in.).

(5) Install reverse shaft and shaft retaining pin in adapter. Then install access hole plug with torx bit (Fig. 46).

(6) Lubricate transmission components with specified gear lubricant.

(7) Assemble 1-2 and 3-4 synchronizer hubs, sleeves, springs and key inserts (Fig. 47).

(8) Assemble and install third gear, needle bearing, synchronizer ring, 3-4 synchronizer and snap ring on output shaft (Fig. 48). Use thickest snap ring that fits in shaft groove.

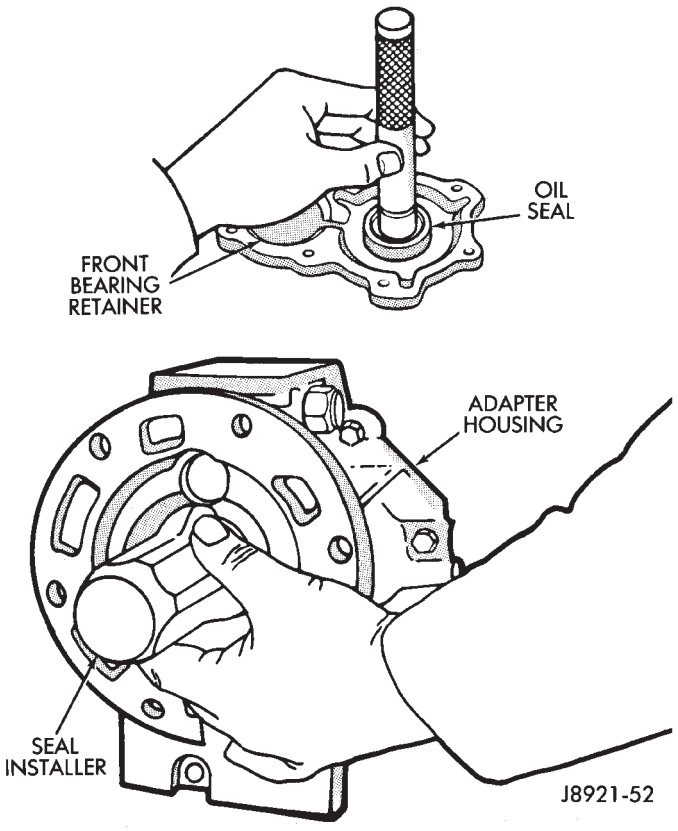

Fig. 45 Oil Seal Installation

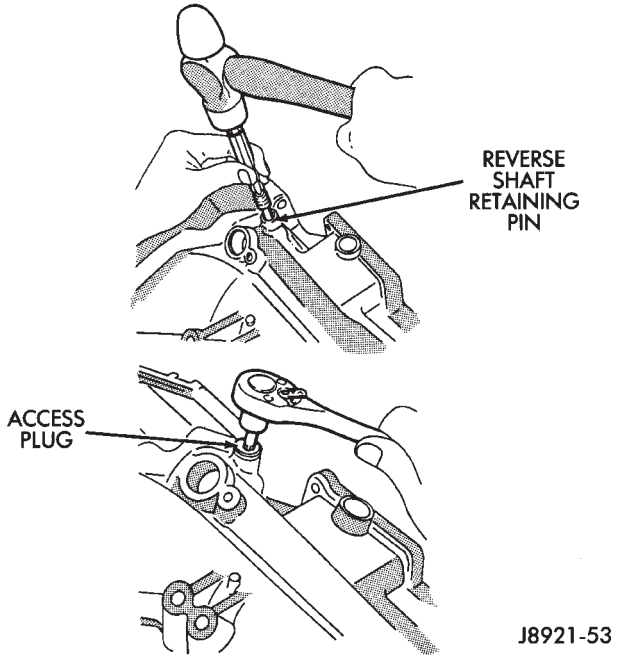

Fig. 46 Installing Reverse Shaft Pin

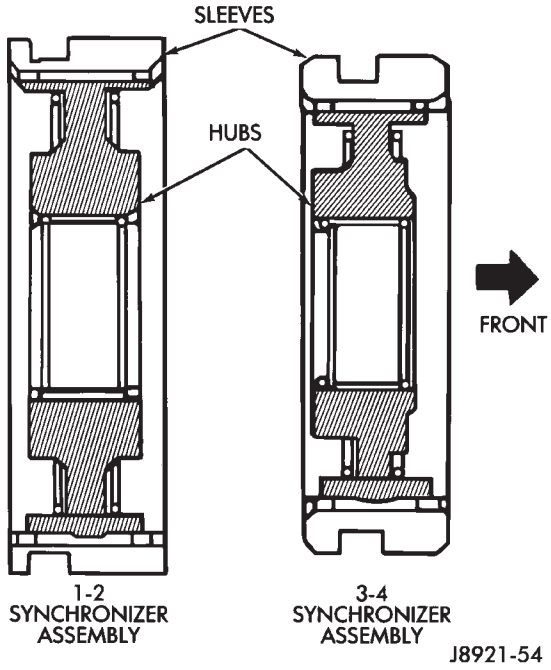

Fig. 47 Synchronizer Identification

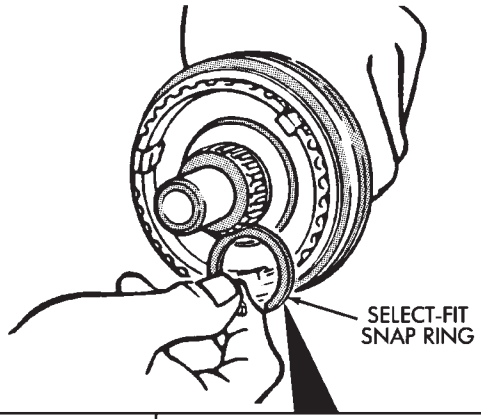

I.D. Mark	Snap Ring Thickness mm (in.)
C-1	1.75-1.80 (0.0689-0.0709)
D	1.80-1.85 (0.0709-0.0728)
D-1	1.85-1.90 (0.0728-0.0748)
E	1.90-1.95 (0.0748-0.0768)
E-1	1.95-2.00 (0.0768-0.0787)
F	2.00-2.05 (0.0788-0.0807)
F-1	2.05-2.10 (0.0807-0.0827)

J8921-55

Fig. 48 Installing Third Gear And 3-4 Synchronizer

(9) Verify third gear thrust clearance with feeler gauge (Fig. 49). Clearance should be 0.10 - 0.25 mm (0.004 - 0.010 in.).

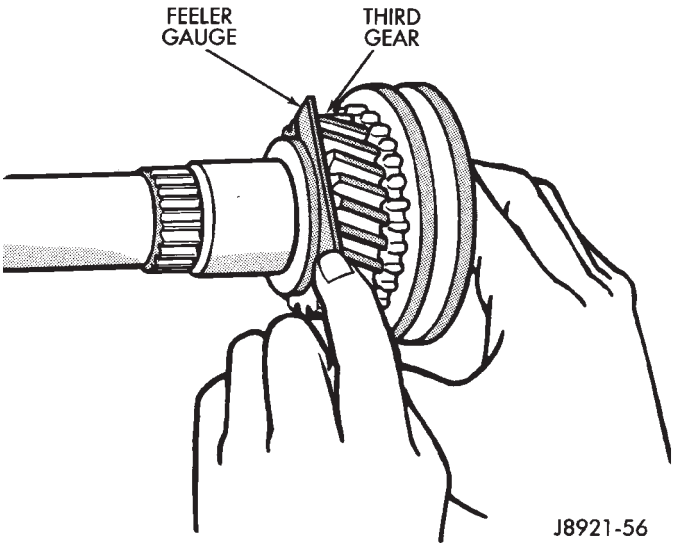

Fig. 49 Checking Third Gear Clearance

(10) Assemble second gear, gear needle bearing, synchronizer ring and 1-2 synchronizer. Then press assembly on output shaft (Fig. 50).

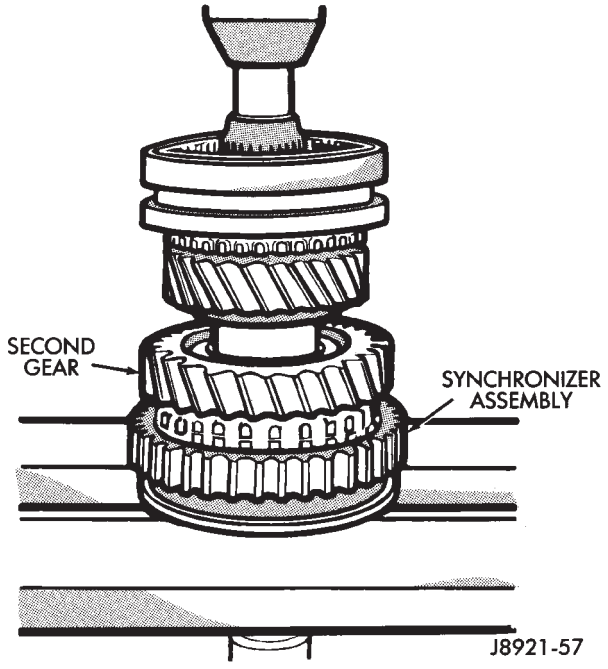

Fig. 50 Installing Second Gear And Synchronizer

(11) Install first gear lock ball in output shaft (Fig. 51).

(12) Assemble first gear, synchronizer ring, gear needle bearing and inner race (Fig. 52). Then install assembly on output shaft. **Rotate inner race until aligned with locking ball.**

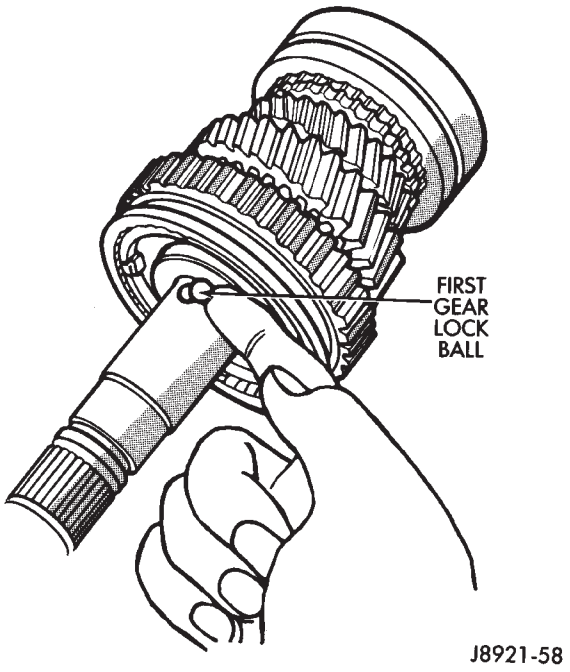

Fig. 51 Installing First Gear And Lock Ball

(13) Press rear bearing on shaft (Fig. 52). Snap ring groove in bearing goes toward rear. Use screwdriver to hold inner race in position when installing bearing (Fig. 53).

(14) Install snap ring on rear bearing.

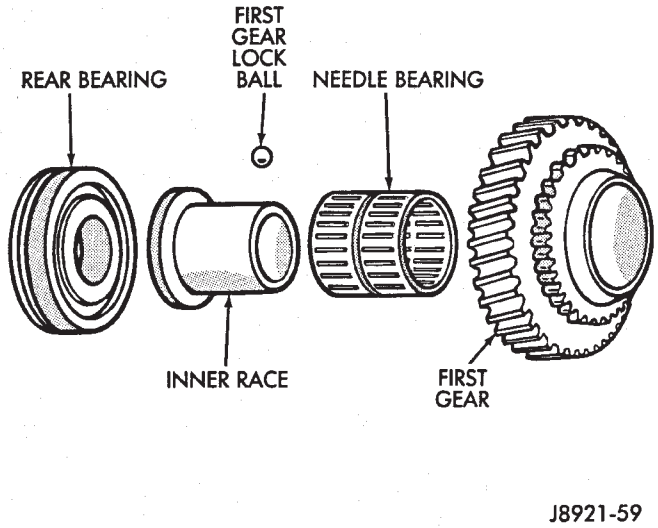

Fig. 52 Assembling First Gear Components

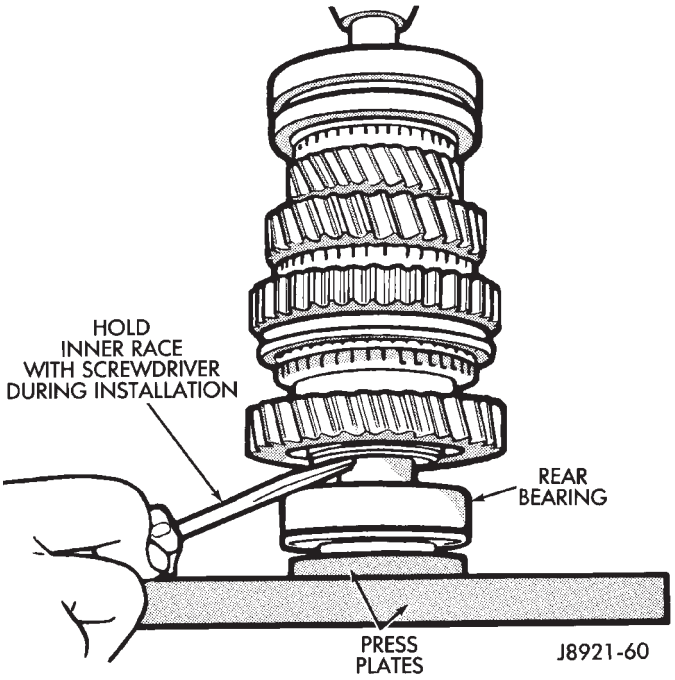

Fig. 53 Installing Output Shaft Rear Bearing

(15) Check first-second gear thrust clearance (Fig. 54). Standard clearance is 0.10 - 0.25 mm (0.004 - 0.010 in.).

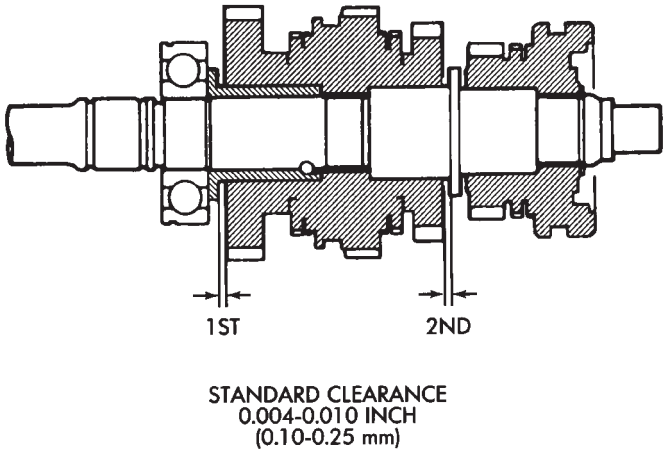

Fig. 54 Checking First-Second Gear Thrust Clearance

(16) Press fifth gear on output shaft (Fig. 55).

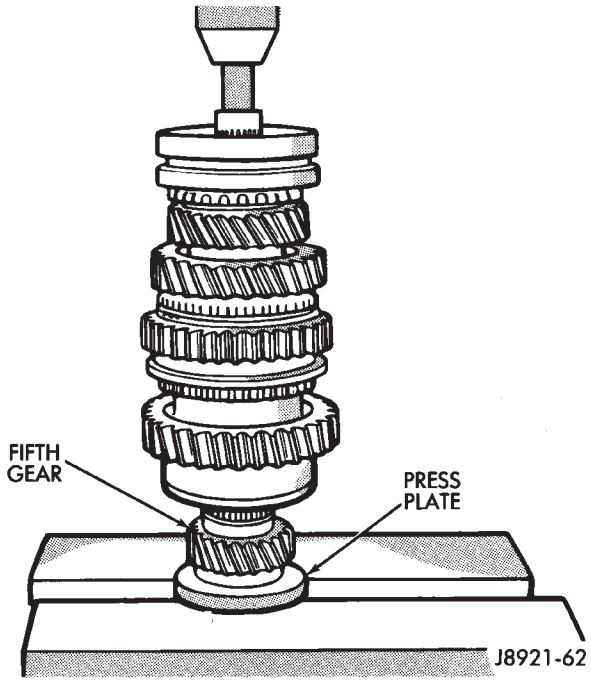

Fig. 55 Installing Output Shaft Fifth Gear

(17) Install fifth gear snap ring (Fig. 56). Use thickest snap ring that will fit in shaft groove.

(18) Lubricate input shaft roller bearings with petroleum jelly and install rollers in shaft (Fig. 57).

(19) Install output shaft assembly in intermediate plate (Fig. 58). Tap plate with mallet and pull on shaft to seat assembly.

(20) Install input shaft on output shaft.

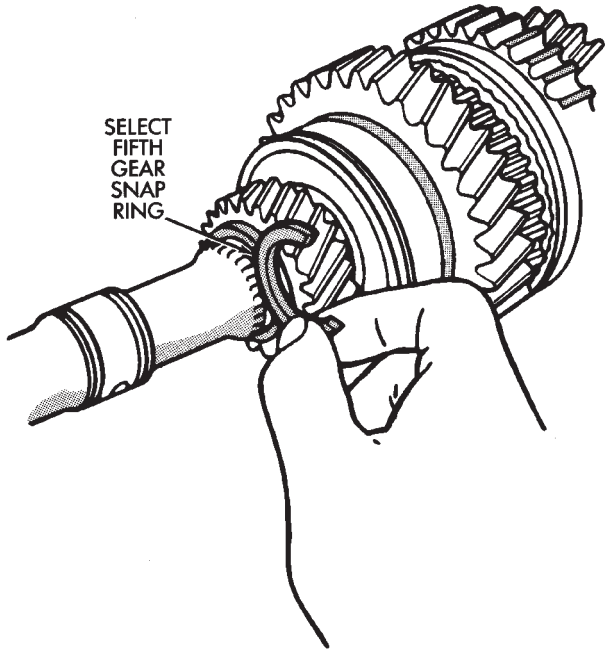

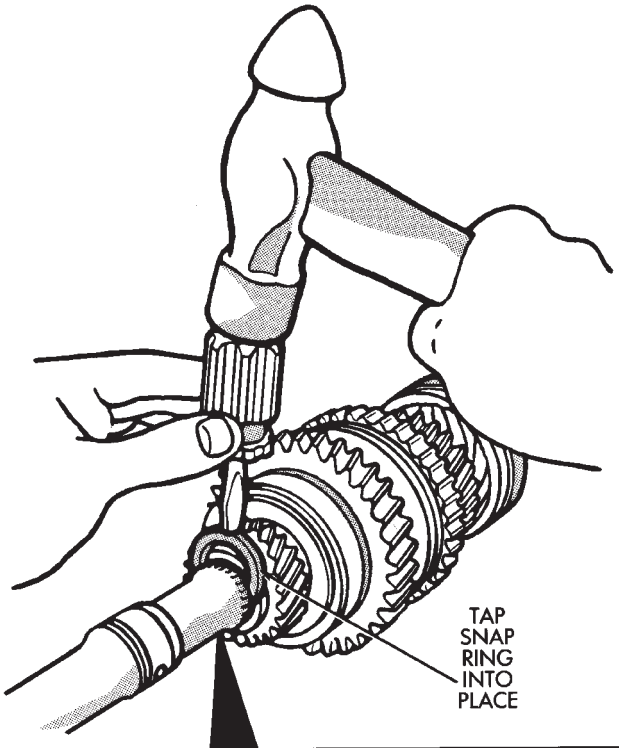

I.D. Mark	Snap Ring Thickness mm (in.)
A	2.67-2.72 (0.1051-0.1071)
B	2.73-2.78 (0.1075-0.1094)
C	2.79-2.84 (0.1098-0.1118)
D	2.85-2.90 (0.1122-0.1142)
E	2.91-2.96 (0.1146-0.1165)
F	2.97-3.02 (0.1169-0.1189)
G	3.03-3.08 (0.1193-0.1213)
H	3.09-3.14 (0.1217-0.1236)
J	3.15-3.20 (0.1240-0.1260)
K	3.21-3.26 (0.1264-0.1283)
L	3.27-3.32 (0.1287-0.1307)

J8921-63

Fig. 56 Selecting/Installing Fifth Gear Snap Ring

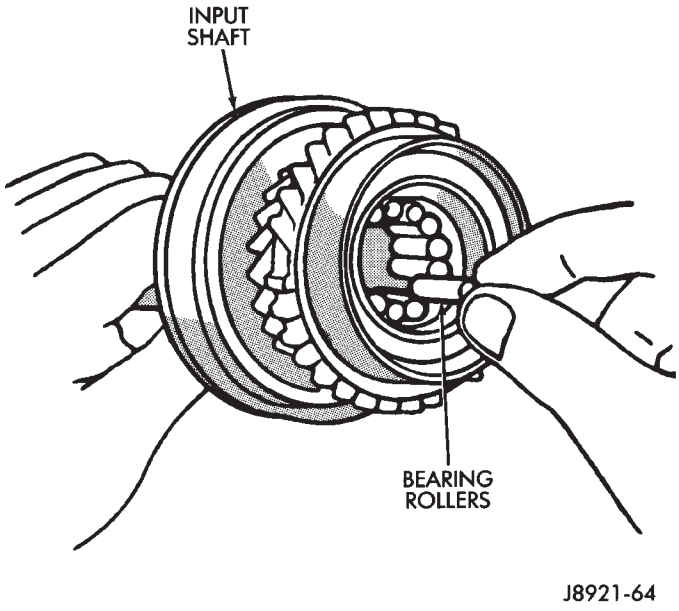

J8921-64

Fig. 57 Installing Input Shaft Bearing Rollers

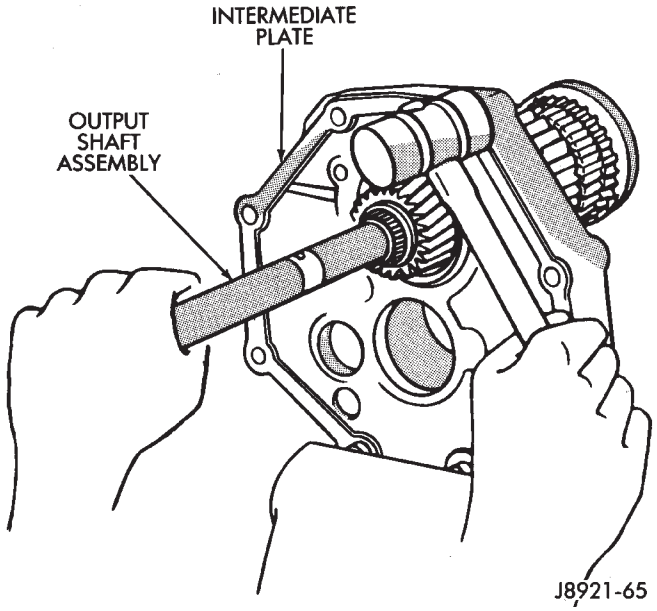

J8921-65

Fig. 58 Installing Output Shaft In Intermediate Plate

(21) Install counter gear in intermediate plate (Fig. 59).

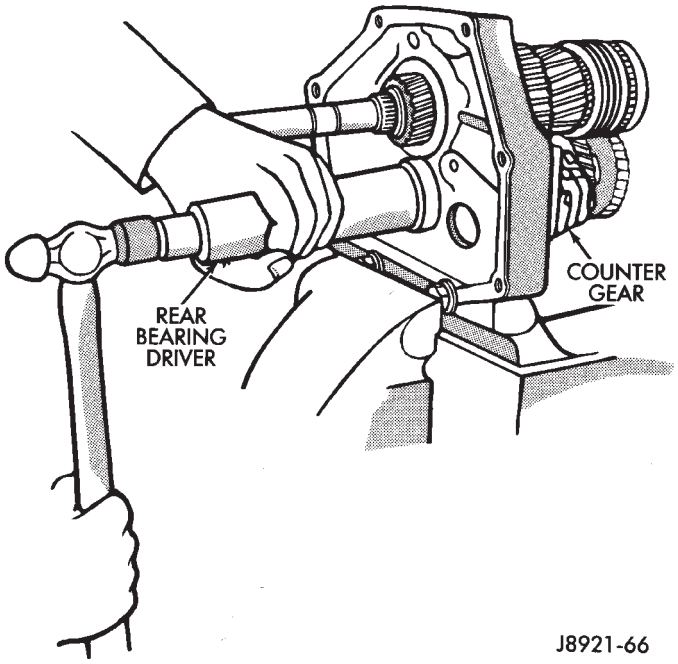

Fig. 59 Counter Gear Installation

(22) Install rear bearing snap ring and install bearing retainer (Fig. 60). Tighten retainer screws to 18 N·m (13 ft. lbs.) torque.

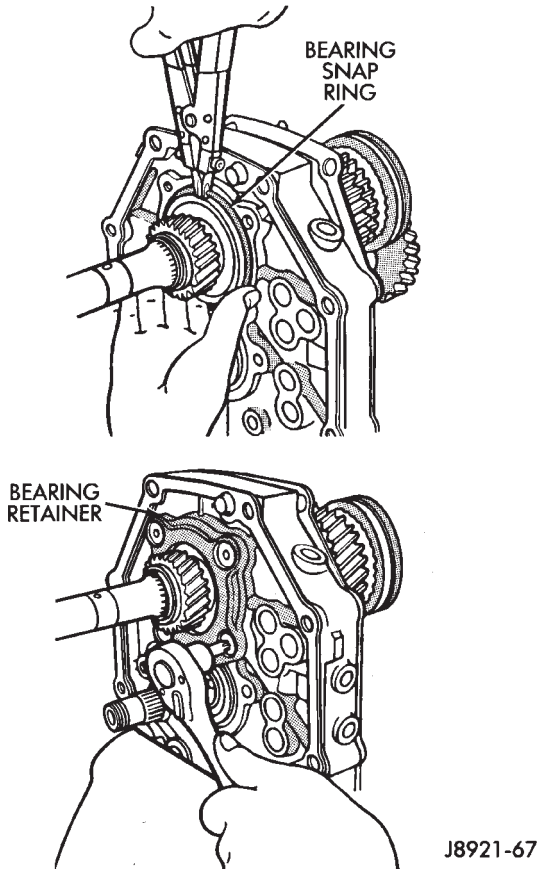

Fig. 60 Installing Bearing Retainer And Snap Ring

(23) Install reverse shift arm (Fig. 61). Tighten attaching bolt to 18 N·m (13 ft. lbs.) torque.

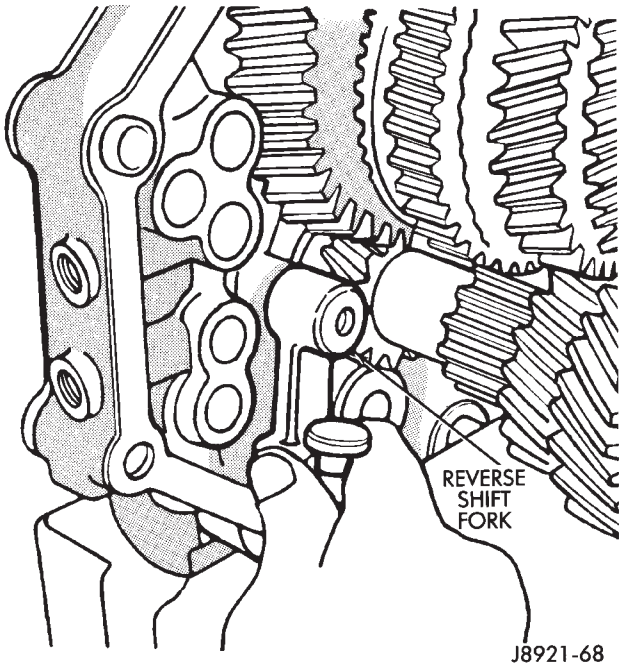

Fig. 61 Installing Reverse Shift Fork

(24) Install lock ball, spacer and needle bearing (Fig. 62) on counter shaft.

(25) On AX 5, assemble counter fifth gear and synchro components (Figs. 42 and 62).

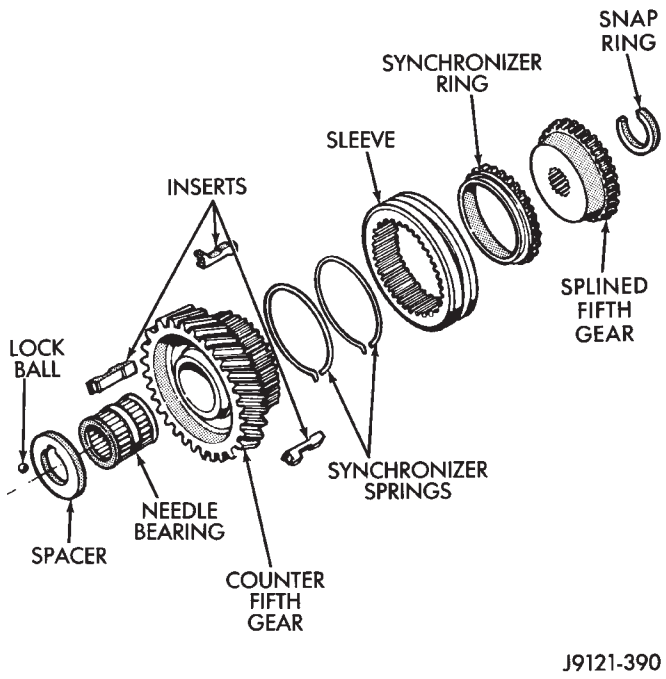

Fig. 62 Counter Fifth Gear And Synchronizer Assembly (AX 5)

(26) On AX 5, install assembled gear and synchronizer on counter shaft (Fig. 63).

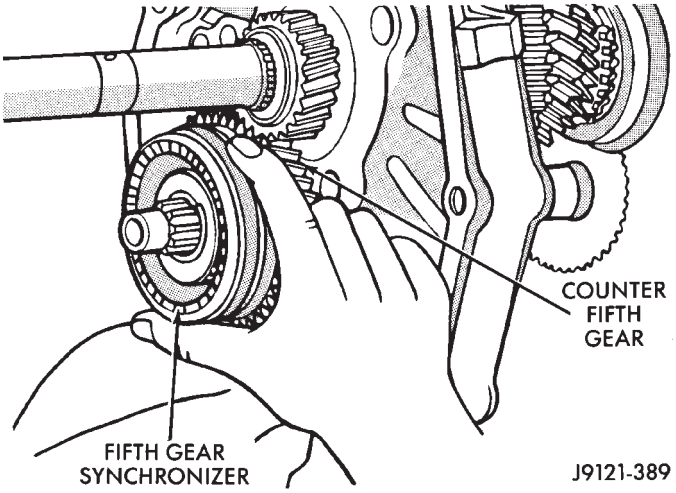

Fig. 63 Fifth Gear And Synchronizer Installation (AX 5)

(27) Install remaining synchronizer ring and spline fifth gear (Fig. 64). Use length of pipe to tap gear into place.

(28) Shift 1-2 and 3-4 synchronizer sleeves into gear to lock output shaft and counter gear (Fig. 20).

(29) On AX 4, install oil slinger and lock nut on counter gear (Fig. 42).

(30) On AX 5, install fifth gear snap ring (Fig. 65).

(31) Disengage 1-2 and 3-4 synchronizer sleeves.

(32) On AX 5, check counter fifth gear thrust clearance (Fig. 66). Standard clearance is 0.10 - 0.30 mm (0.004 - 0.010 in.). Adjust clearance with different thickness snap ring if necessary.

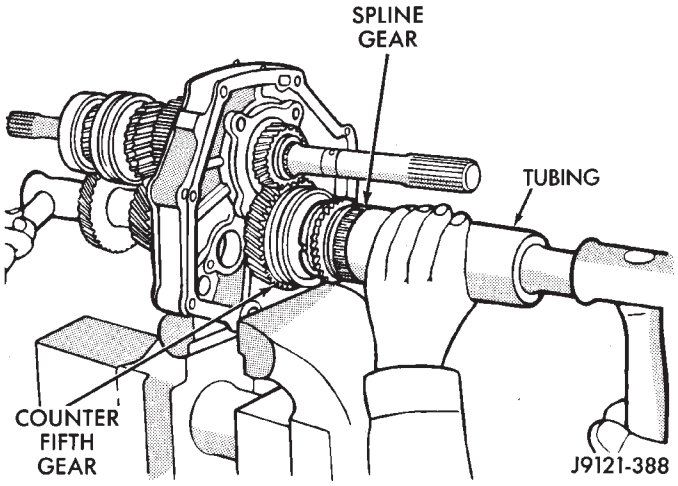

Fig. 64 Installing Fifth Gear (AX 5)

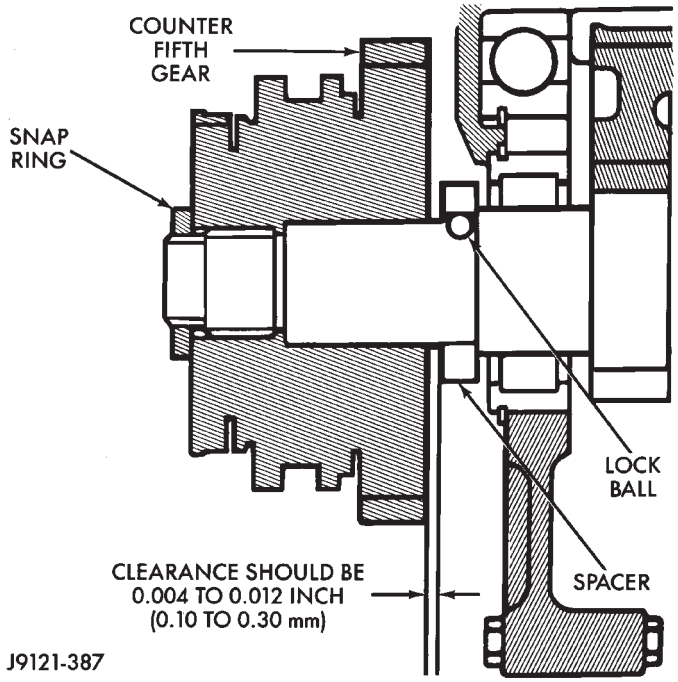

Fig. 65 Checking Fifth Gear Thrust Clearance (AX 5)

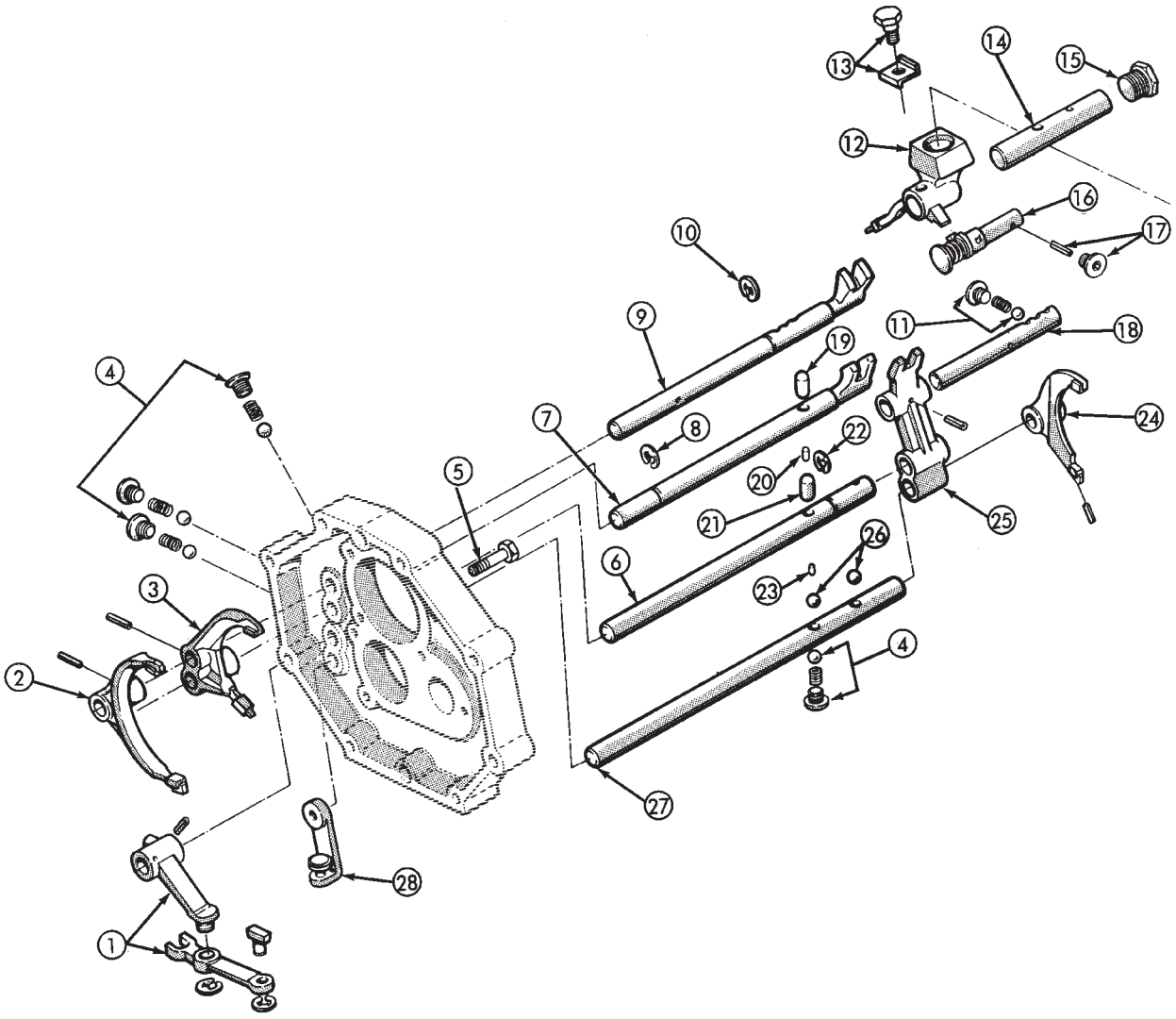

1. REVERSE FORK AND SHIFT ARM
2. 1-2 SHIFT FORK
3. 3-4 SHIFT FORK
4. LOCK BALL, SPRING AND PLUG (AX 5)
5. BRACKET BOLT
6. NO. 3 SHIFT RAIL
7. NO. 1 SHIFT RAIL
8. C-RING
9. NO. 2 SHIFT RAIL
10. C-RING
11. LOCK BALL, SPRING AND PLUG
12. SHIFT ARM
13. SET BOLT AND LOCK PLATE
14. SHIFT LEVER SHAFT
15. SHAFT PLUG
16. REVERSE PIN
17. RETAINING PIN AND PLUG
18. NO. 5 SHIFT RAIL
19. INTERLOCK PIN
20. INTERLOCK PIN
21. INTERLOCK PIN
22. C-RING
23. INTERLOCK PIN
24. FIFTH-REVERSE FORK (AX 5)
25. REVERSE SHIFT HEAD
26. LOCK BALLS (AX 5)
27. NO. 4 SHIFT RAIL (AX 5)
28. REVERSE ARM BRACKET

J9021-122

Fig. 66 Shift Components

SHIFT MECHANISM ASSEMBLY AND INSTALLATION

When assembling the shift mechanism, refer to Figure 66 for component details and location.

(1) Install reverse shift arm. Then seat shift fork in bracket (Fig. 67).

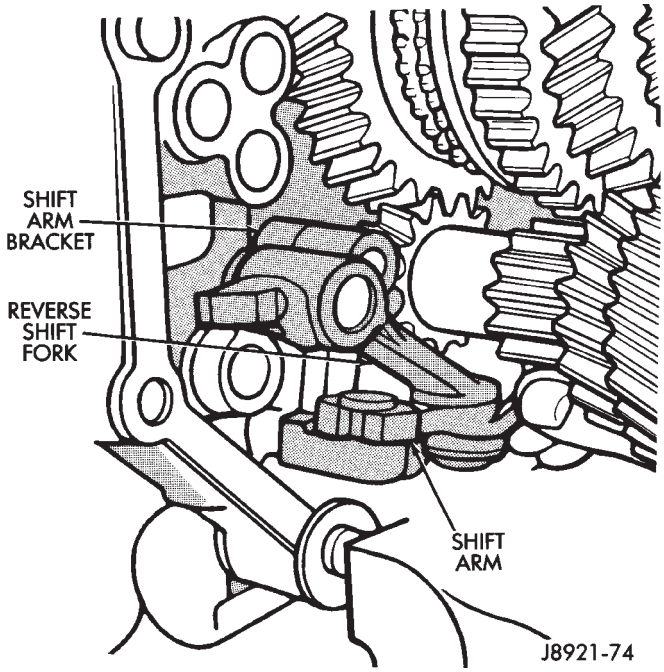

Fig. 67 Installing Reverse Shift Arm

(2) Install reverse idler gear on shaft. Then install shaft and gear in intermediate plate (Fig. 68). Install shaft lock plate and tighten attaching bolt to 18 N·m (13 ft. lbs.) torque.

(3) Install 1-2 and 3-4 shift forks in synchronizer sleeves. Then slide No. 2 shift rail through intermediate plate and into forks (Fig. 69).

(4) Coat shift rail interlock pins and balls with liberal quantity of petroleum jelly to hold them in place.

(5) Refer to Figure 70 for interlock ball and pin positions during following assembly steps.

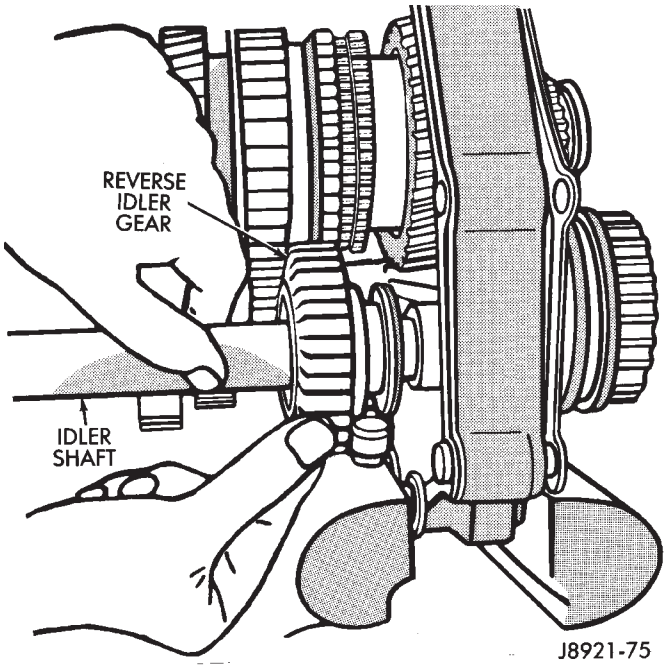

Fig. 68 Installing Reverse Idler Gear And Shaft

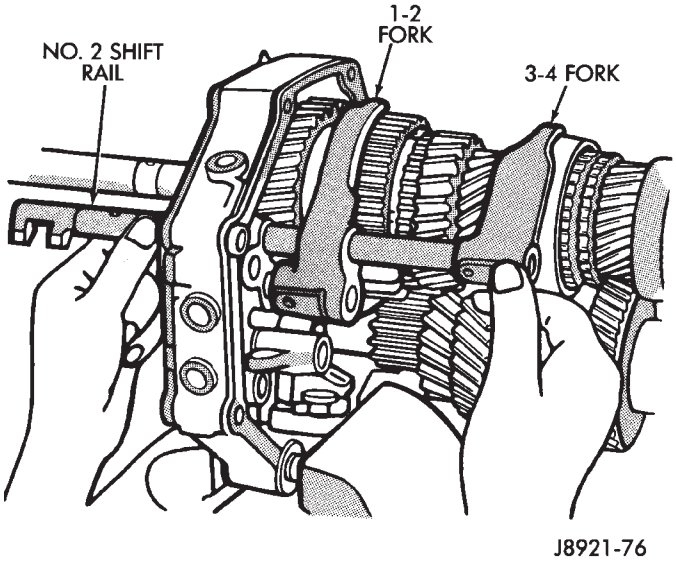

Fig. 69 Installing No. 2 Shift Rail and Shift Forks

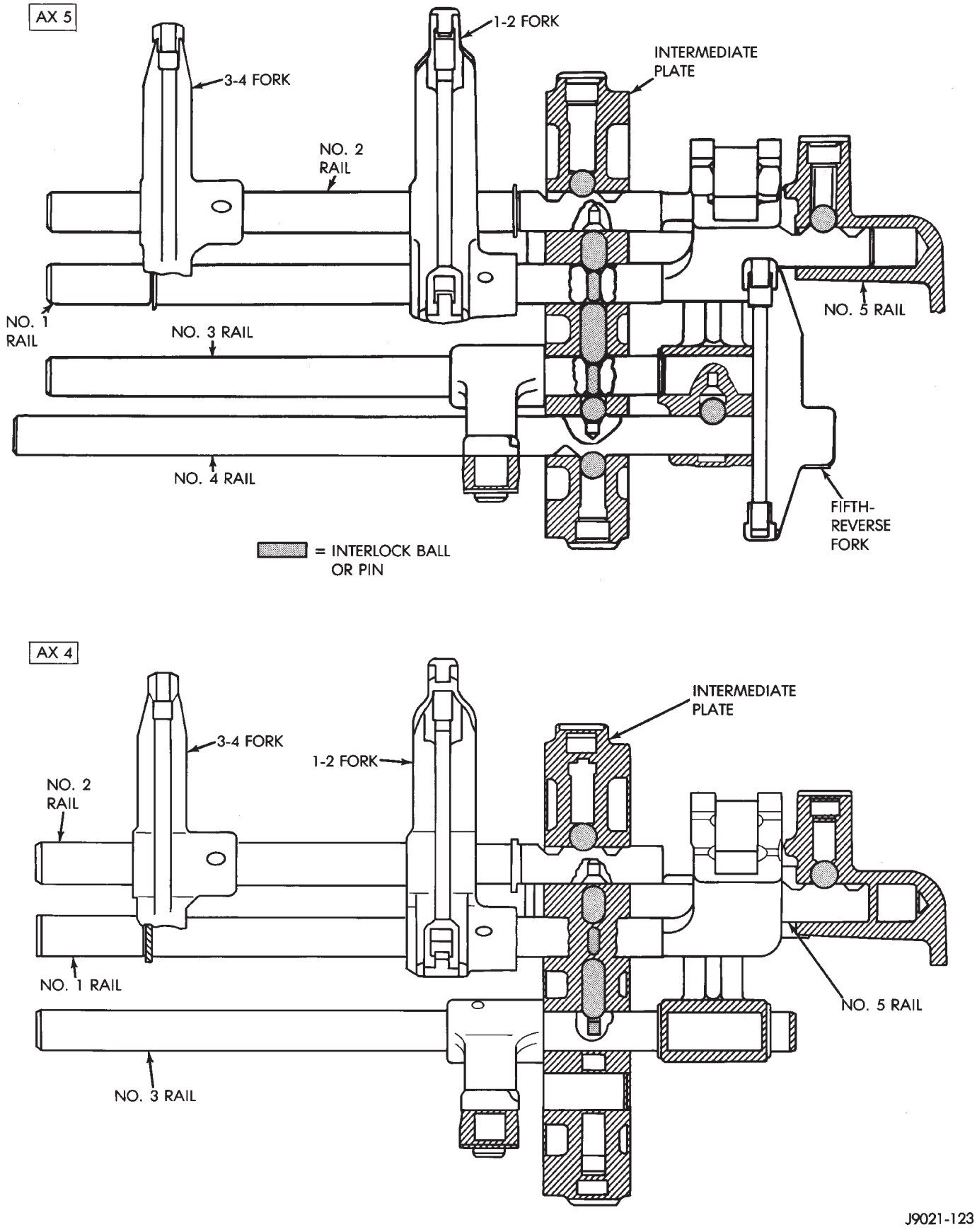

Fig. 70 Interlock Ball And Pin Position

(6) Insert first interlock pin in intermediate plate (Fig. 71). Use pencil magnet and screwdriver to install pin.

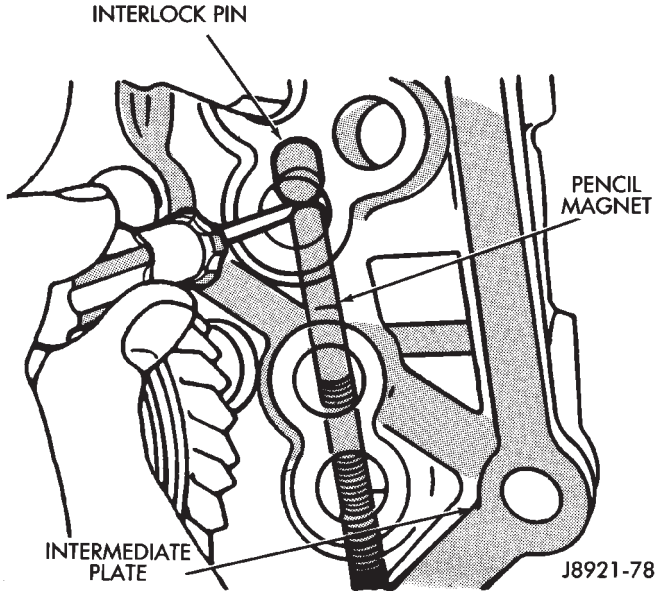

Fig. 71 Installing First Interlock Pin

(7) Install smaller diameter interlock pin in No. 1 rail (Fig. 72).

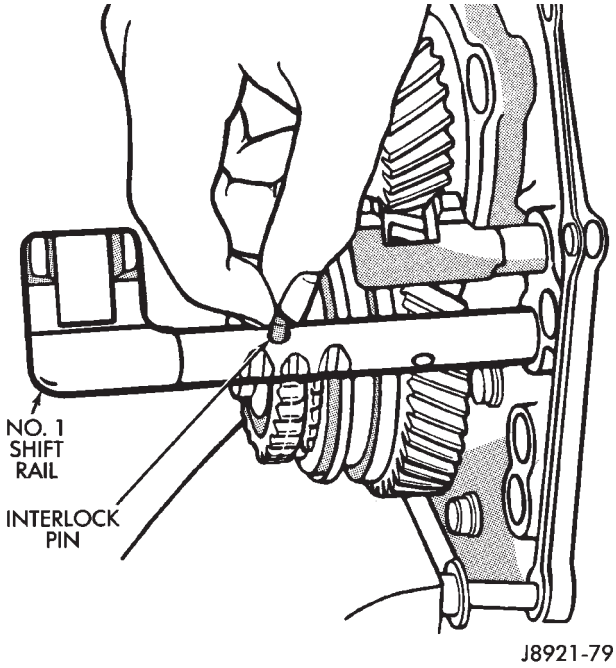

Fig. 72 Installing Interlock Pin In No. 1 Shift Rail

(8) Slide No. 1 rail through 1-2 shift fork (Fig. 73).

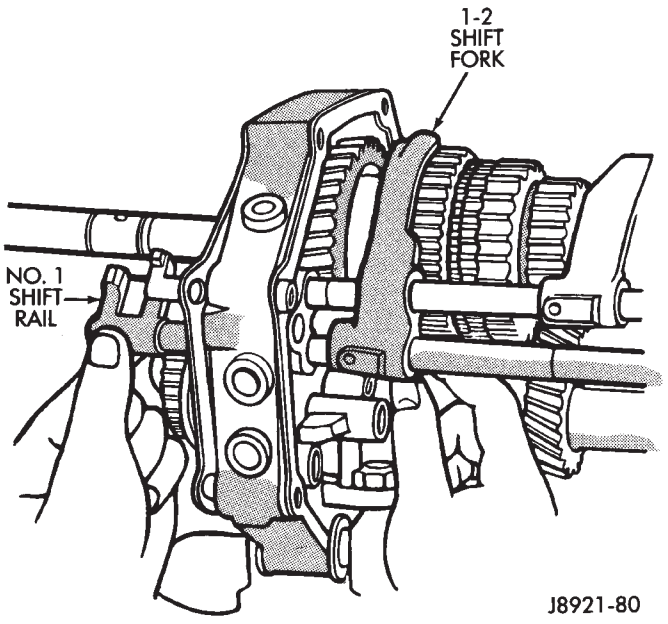

Fig. 73 Installing No. 1 Shift Rail

(9) Install largest interlock pin between Nos. 1 and 3 shift rails (Fig. 74).

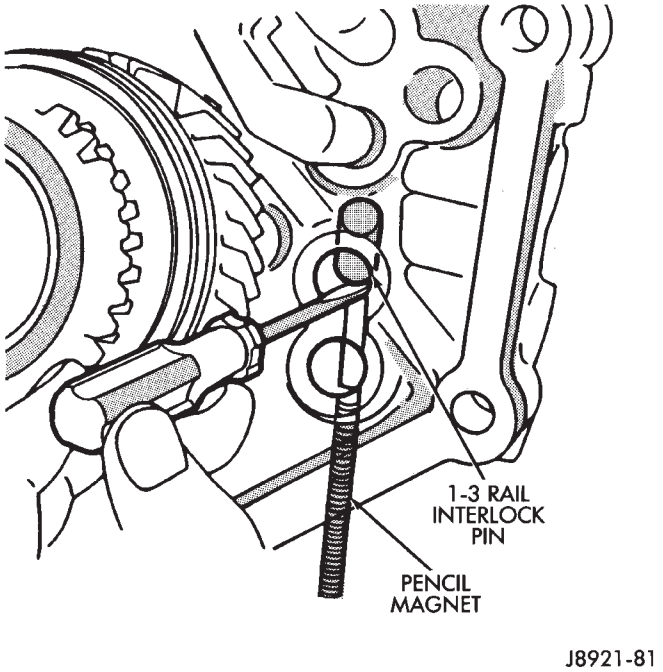

Fig. 74 Installing 1-3 Shift Rail Interlock Pin

(10) Install interlock pin in No. 3 shift rail (Fig. 75).

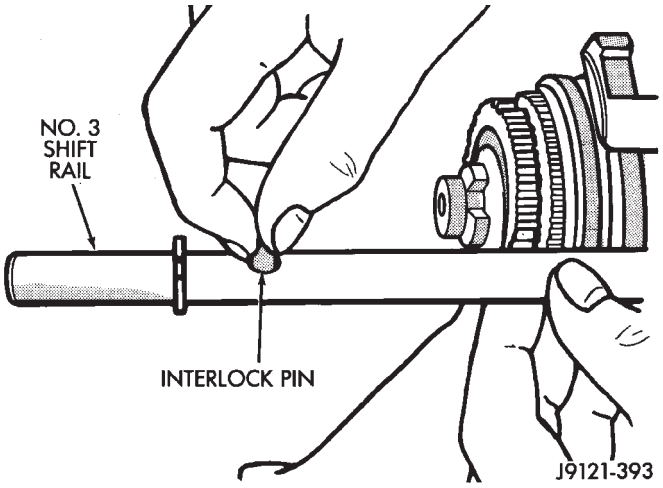

Fig. 75 Installing No. 3 Shift Rail Interlock Pin

(11) Slide No. 3 rail into reverse shift head (Fig. 76).

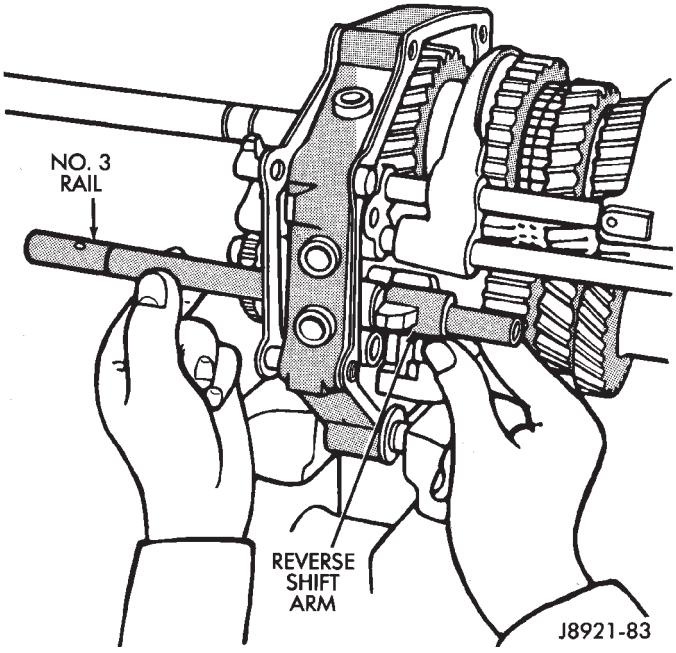

Fig. 76 Installing No. 3 Shift Rail

(12) Assemble reverse shift head and No. 5 shift rail.

(13) Install No. 5 shift rail in intermediate plate and engage shift head on No. 3 shift rail (Fig. 77).

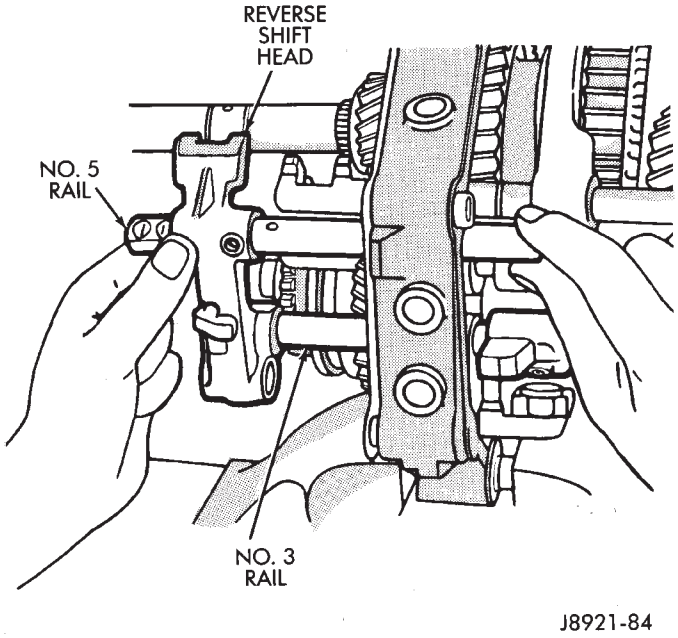

Fig. 77 Installing Reverse Shift Head

(14) Install reverse shift head lock ball with screwdriver and pencil magnet (Fig. 78).

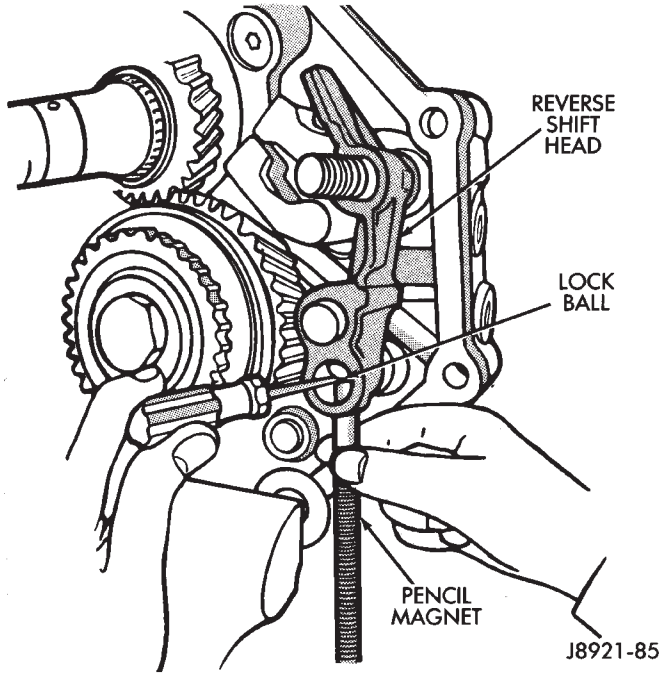

Fig. 78 Installing Reverse Shift Head Lock Ball

(15) Shift fifth gear synchronizer sleeve rearward to lock it (Fig. 79).

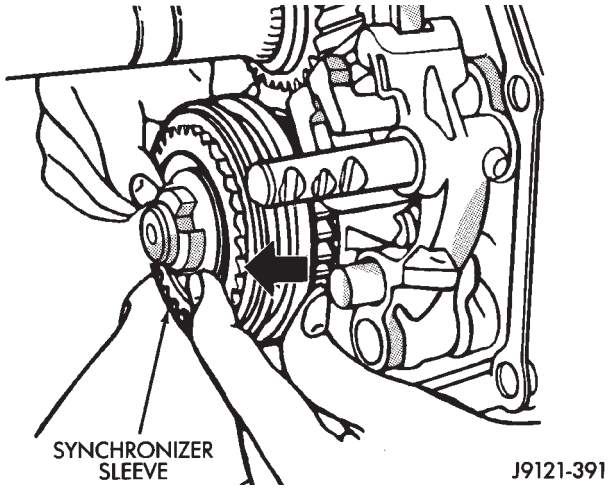

Fig. 79 Locking Fifth Synchronizer

(16) On AX 5, install fifth-reverse shift fork in synchronizer sleeve. Then slide No. 4 shift rail into fork (Fig. 80).

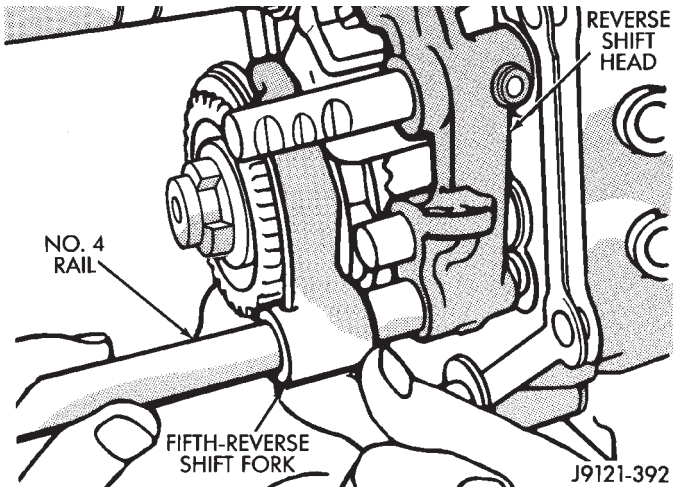

Fig. 80 Fifth-Reverse Shift Fork Installation

(17) Install shift rail lock ball with pencil magnet and screwdriver (Fig. 81).

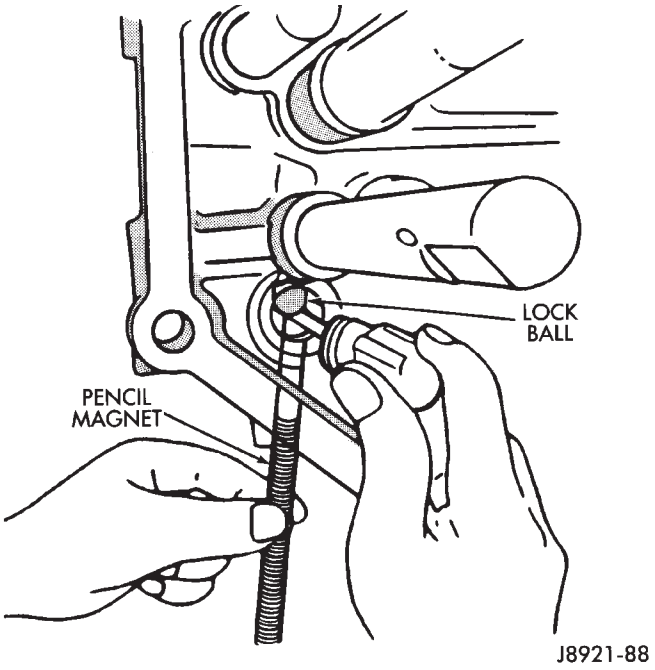

Fig. 81 Lock Ball Installation

(18) Check interlock operation as follows: Move No. 1 shift rail rearward to first gear position. Interlock operation is OK if remaining shift rails did not move.

(19) Install new shift fork pins (Fig. 82).

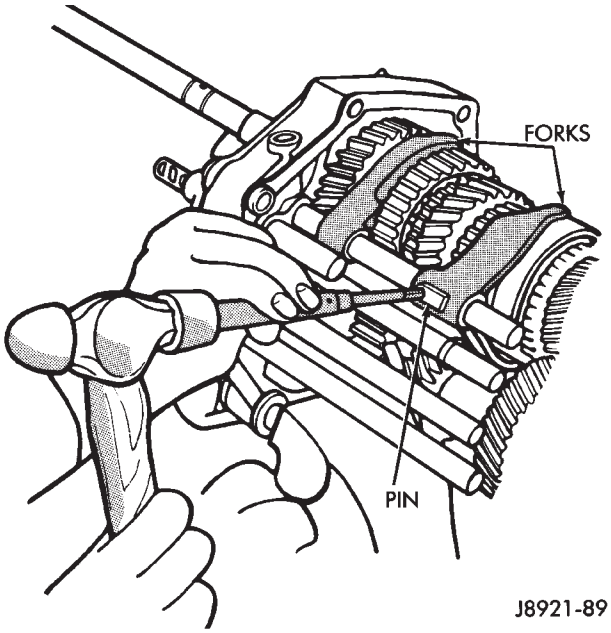

Fig. 82 Installing Shift Fork Pins

(20) Install new shift rail C-rings (Fig. 83).

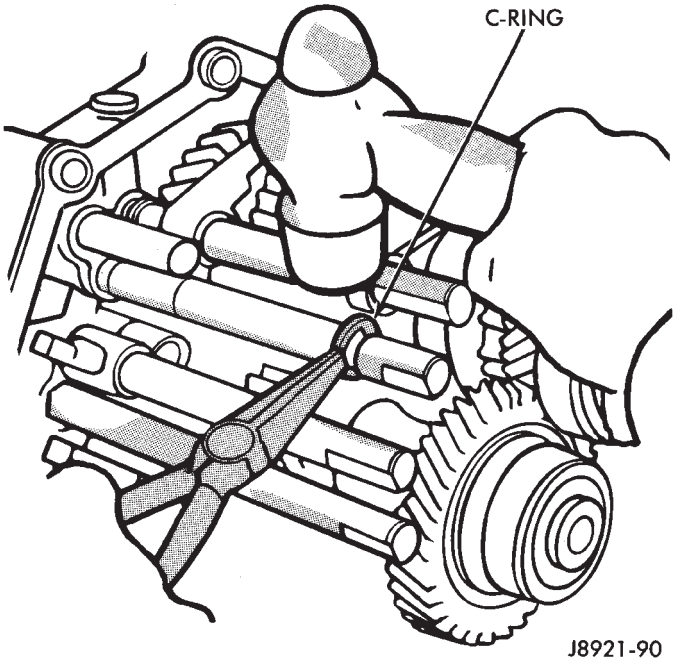

Fig. 83 Installing Shift Rail C-Rings

(21) Apply sealer to threads of lock ball plugs.

(22) Install lock balls and springs in intermediate plate. **Short spring goes in top hole of intermediate plate.**

(23) Install lock ball and spring plugs (Fig. 84). Tighten plugs to 19 N·m (14 ft. lbs.) torque.

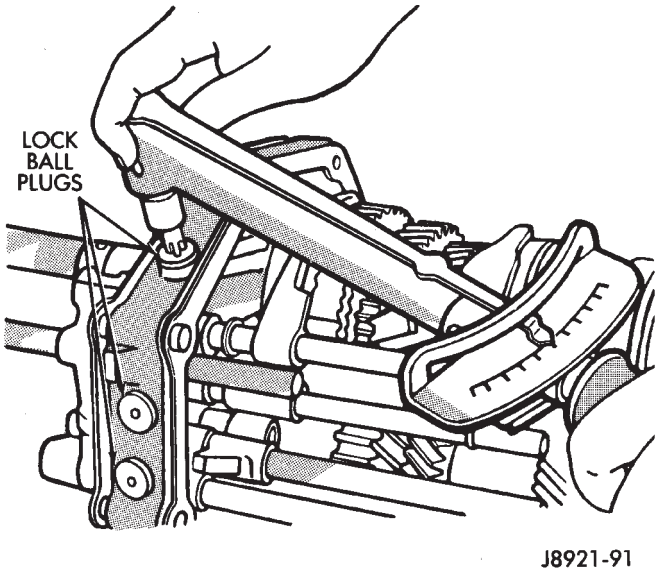

Fig. 84 Installing Lock Ball Plugs

ASSEMBLING GEARTRAIN AND TRANSMISSION CASE

(1) Remove intermediate plate from vise.

(2) Install new gaskets on intermediate plate.

(3) Install transmission case on intermediate plate (Fig. 85).

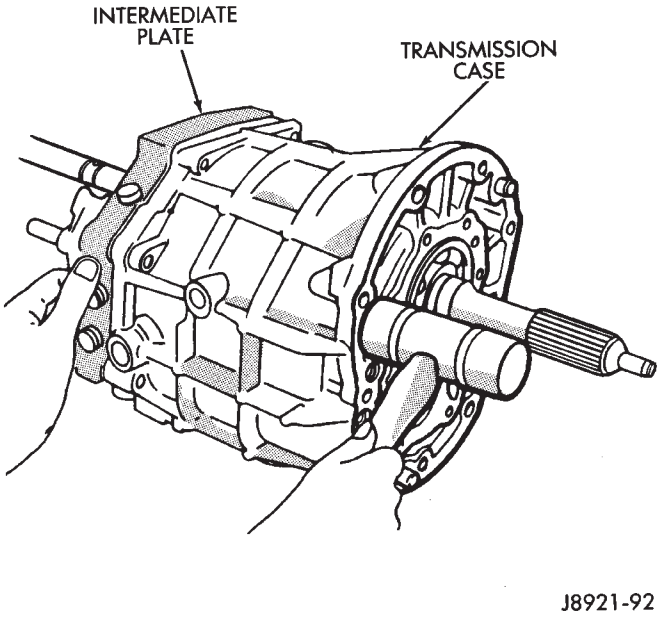

Fig. 85 Installing Transmission Case

(4) Install new front bearing snap ring (Fig. 86).

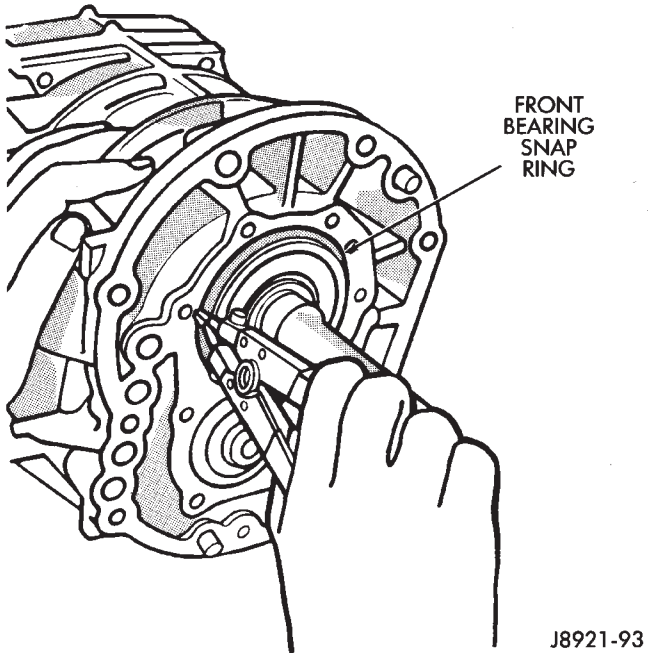

Fig. 86 Installing Front Bearing Snap Ring

(5) Install new gasket on front bearing retainer and install retainer on case (Fig. 87).

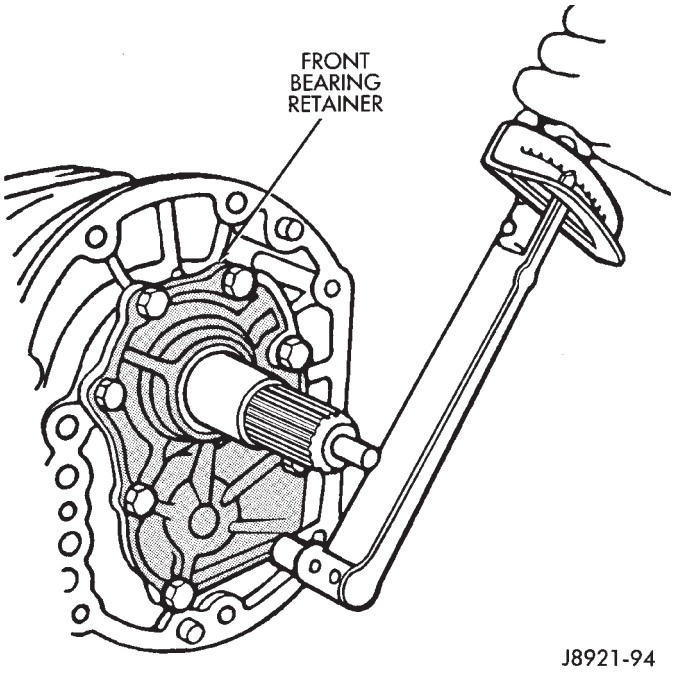

Fig. 87 Installing Front Bearing Retainer

(6) Install adapter or extension housing on intermediate plate (Fig. 88). Tighten housing bolts to 37 N·m (27 ft. lbs.) torque.

(7) Install shift arm (Fig. 88).

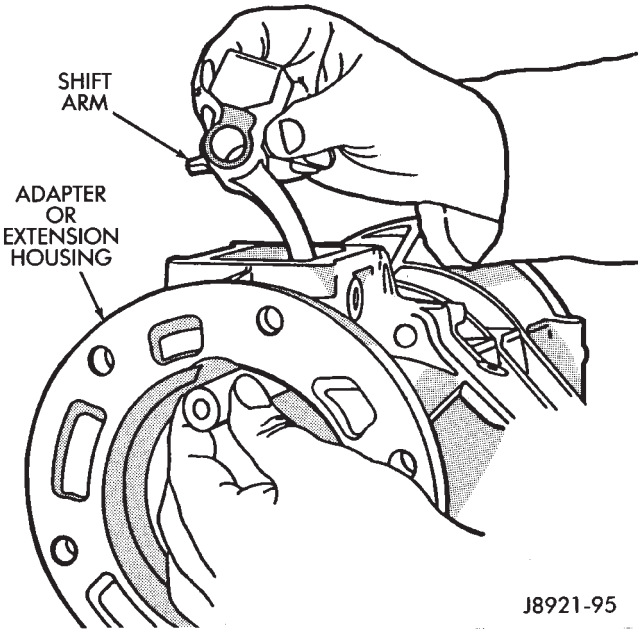

Fig. 88 Installing Adapter Housing And Shift Arm

(8) Install shift arm lock plate with pliers (Fig. 89). Then install and tighten lock plate set bolt to 38 N·m (28 ft. lbs.) torque.

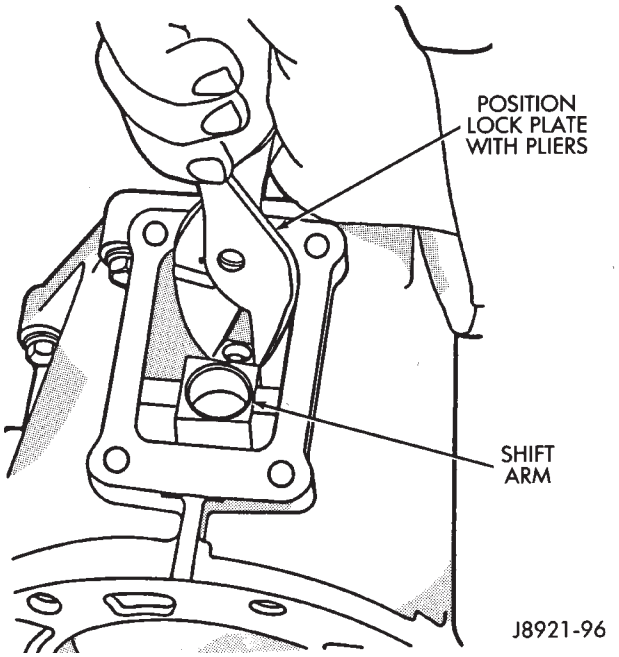

Fig. 89 Shift Arm Lock Plate Installation

(9) Install and tighten shaft plug to 18 N·m (13 ft. lbs.) torque (Fig. 90).

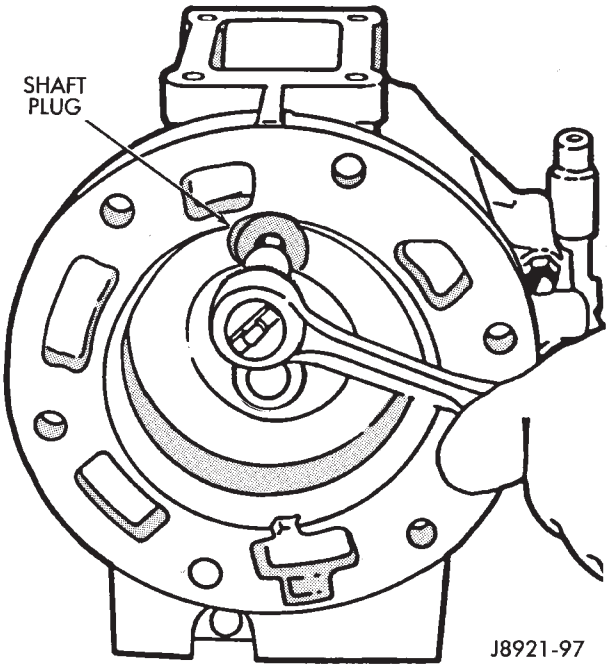

Fig. 90 Shaft Plug Installation

(10) Install lock ball and spring in housing. Then apply sealer to ball plug and install plug (Fig. 91). Tighten plug to 19 N·m (14 ft. lbs.) torque.

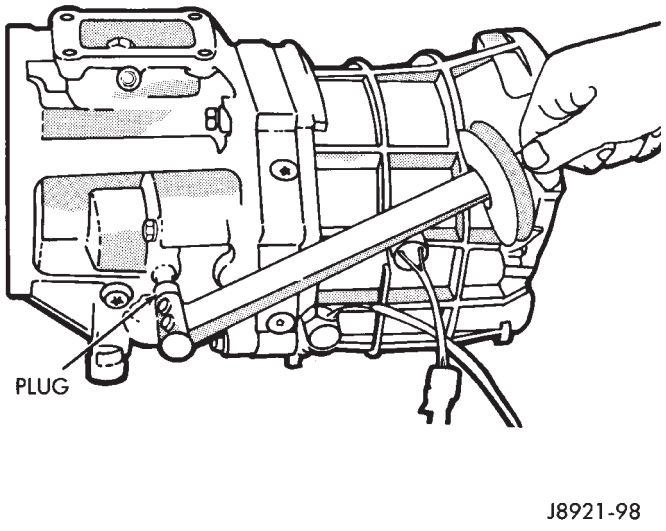

Fig. 91 Installing Ball Plug

(11) Install reverse pins in housing (Fig. 92). Tighten pins to 27 N·m (20 ft. lbs.) torque.

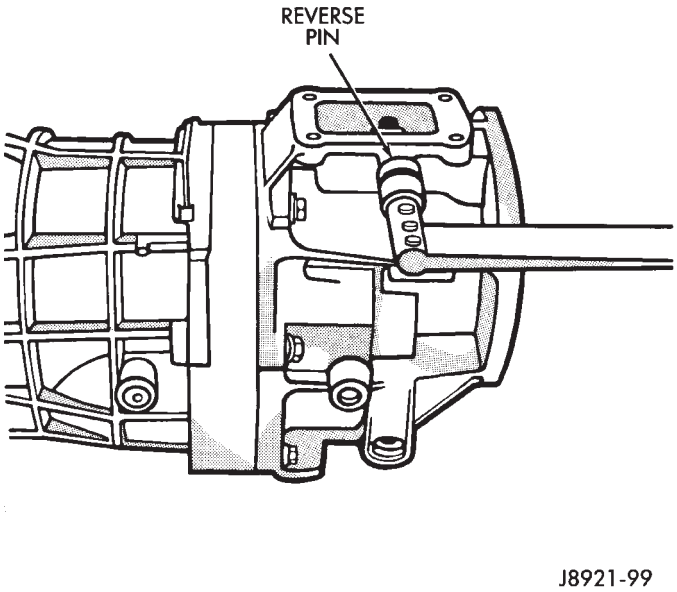

Fig. 92 Install Reverse Pins

(12) Install shift tower and new gasket on housing (Fig. 93). Tighten tower bolts to 18 N·m (13 ft. lbs.) torque.

(13) Install backup lamp switch (Fig. 93). Tighten switch to 37 N·m (27 ft. lbs.) torque.

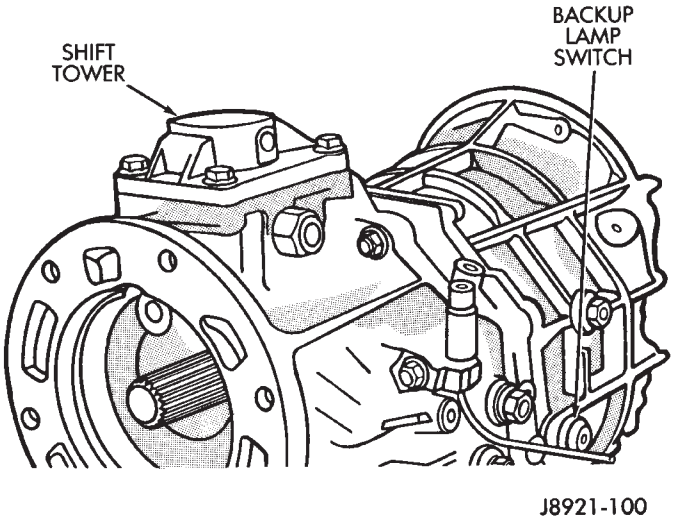

Fig. 93 Installing Shift Tower And Backup Lamp Switch

(14) On 2-wheel drive models, install new seal in extension housing (Fig. 94).

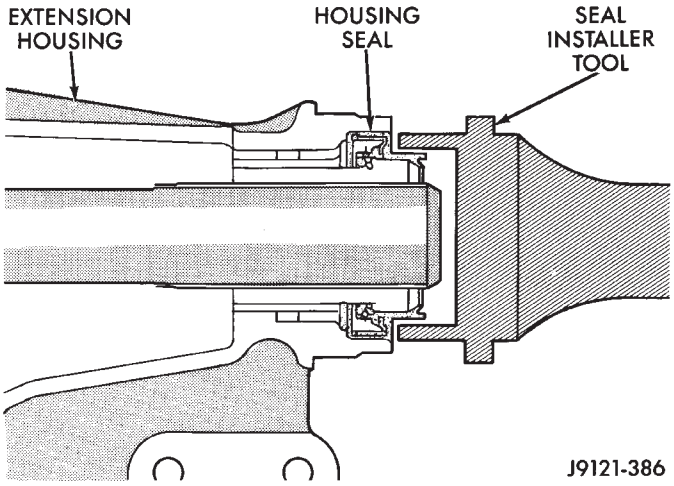

Fig. 94 Extension Housing Seal Installation—2WD Models

(15) Install vehicle speed sensor. Refer to procedure in In-Vehicle Service section.

(16) Install clutch housing, release bearing, release fork and retainer clip.

AX 15 MANUAL TRANSMISSION

INDEX

	page		page
General Information	33	Transmission Installation	36
Service Diagnosis	34	Transmission Lubricant	34
Transmission Assembly and Adjustment	52	Transmission Removal	35
Transmission Disassembly and Overhaul	37	Transmission Shift Pattern	34
Transmission Gear Ratios	34	Transmission Switch and Plug Locations	34
Transmission Identification	33		

GENERAL INFORMATION

The AX 15 is a 5-speed, synchromesh, manual transmission. Fifth gear is an overdrive range with a ratio of 0.79:1. The shift mechanism is integral and mounted in the shift tower portion of the adapter housing (Fig. 1).

An adapter housing is used to attach the transmission to the transfer case on 4-wheel drive models. A standard extension housing is used on 2-wheel drive models.

The AX 15 is used in XJ and YJ models with a 4.0L engine. The AX 15 is used for two and four-wheel drive applications.

TRANSMISSION IDENTIFICATION

The AX 15 identification code numbers are on the bottom surface of the transmission gear case (Fig. 2).

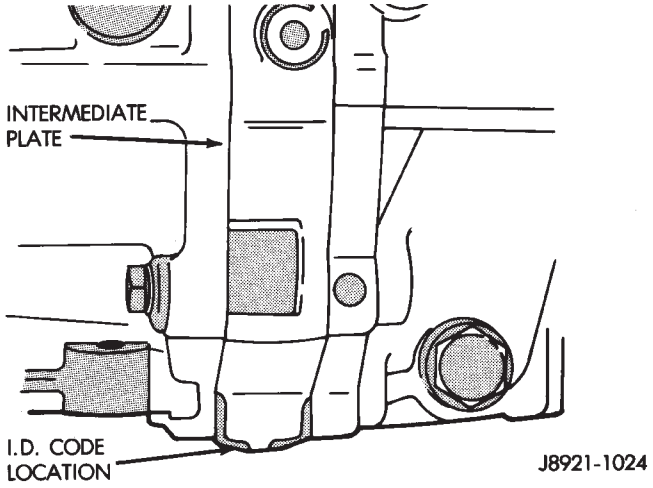

Fig. 2 Identification Code Number Location

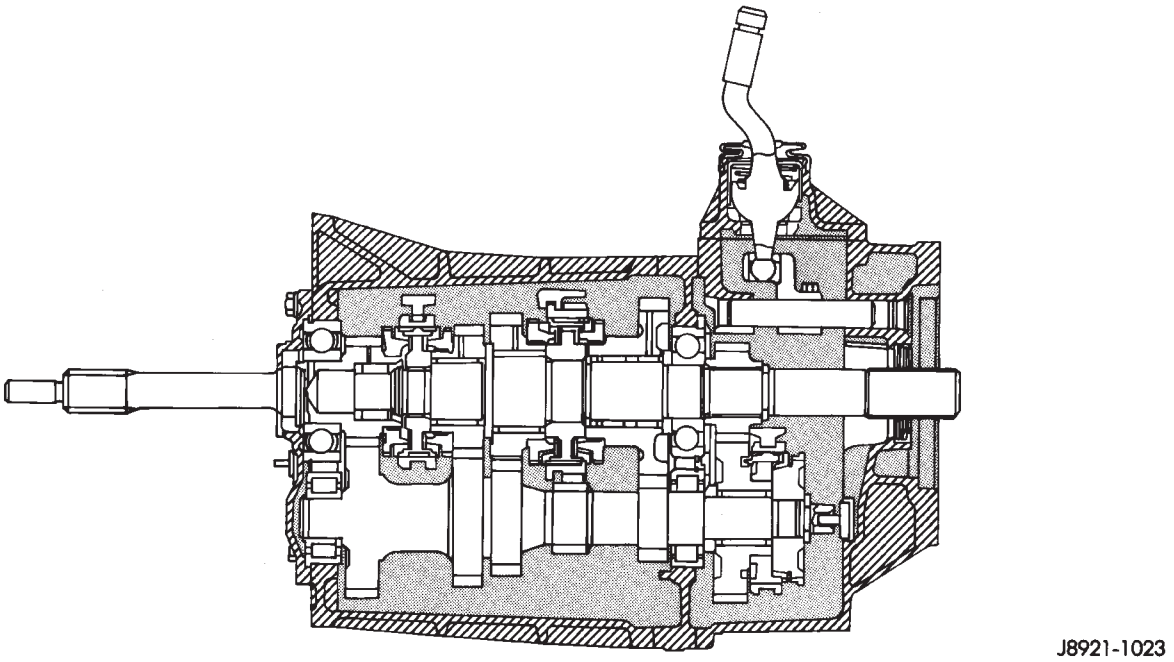

Fig. 1 AX 15 Manual Transmission

The first number is year of manufacture. The second and third numbers indicate month of manufacture. The next series of numbers is the transmission serial number.

TRANSMISSION SHIFT PATTERN

The AX 15 shift pattern is shown in Figure 3. First and second and third and fourth gear ranges are in line for improved shifting. Fifth and reverse gear ranges are also in line at the extreme right of the pattern (Fig. 3).

The AX 15 is equipped with a reverse lockout mechanism. The shift lever must be moved through the Neutral detent before making a shift to reverse.

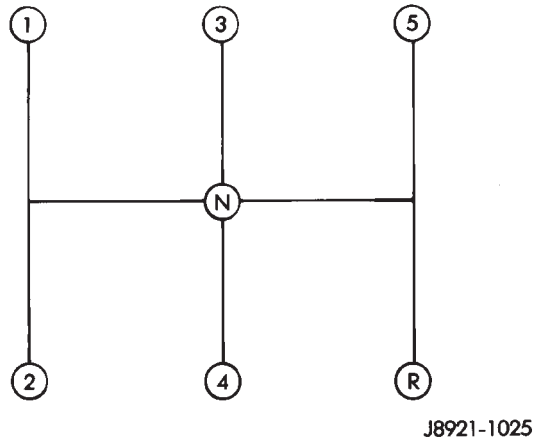

Fig. 3 AX 15 Shift Pattern

TRANSMISSION LUBRICANT

Recommended lubricant for AX 15 transmissions is Mopar 75W-90, API Grade GL-5 gear lubricant, or equivalent.

Correct lubricant level is from the bottom edge, to no more than 6 mm (1/4 in.) below the bottom edge of the fill plug hole.

Approximate dry fill lubricant capacity is:

- 3.10 liters (3.27 qts.) in 4-wheel drive models
- 3.15 liters (3.32 qts.) in 2-wheel drive models

TRANSMISSION SWITCH AND PLUG LOCATIONS

The fill plug is at the driver side of the gear case (Fig. 4).

The drain plug and backup light switch are on the passenger side of the gear case (Fig. 5).

TRANSMISSION GEAR RATIOS

AX 15 gear ratios are:

First gear - 3.83:1
Second gear - 2.33:1
Third gear - 1.44:1
Fourth gear - 1.00:1
Fifth gear - 0.79:1
Reverse - 4.22:1

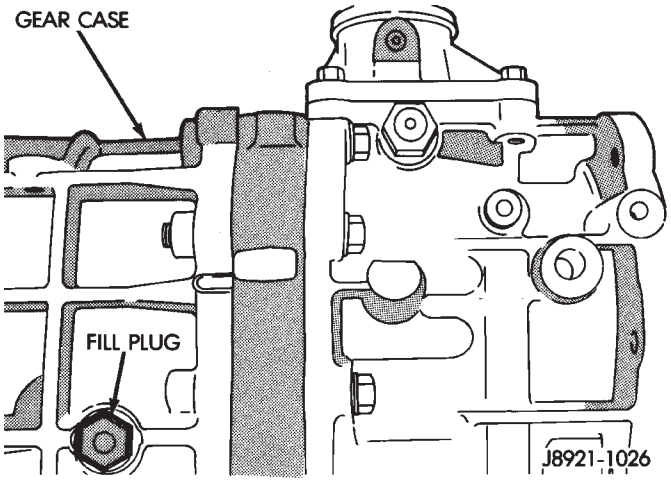

Fig. 4 Fill Plug Location

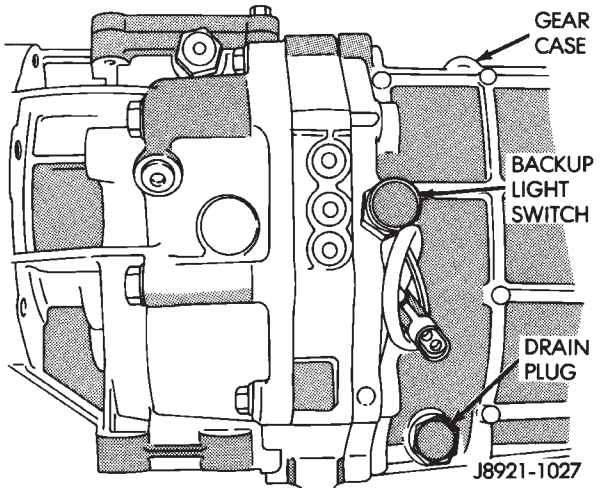

Fig. 5 Drain Plug/Backup Light Switch Location

SERVICE DIAGNOSIS

LOW LUBRICANT LEVEL

A low transmission lubricant level is generally the result of a leak, inadequate lubricant fill, or an incorrect lubricant level check.

Leaks can occur at the mating surfaces of the gear case, intermediate plate and adapter or extension housing, or from the front/rear seals. A suspected leak could also be the result of an overfill condition.

Leaks at the rear of the extension or adapter housing will be from the housing oil seals. Leaks at component mating surfaces will usually be the result of inadequate sealer, gaps in the sealer, incorrect bolt tightening, or use of a non-recommended sealer.

A leak at the front of the transmission will be from either the front bearing retainer or retainer seal. Lubricant may be seen dripping from the clutch housing after extended operation. If the leak is severe, it may also contaminate the clutch disc causing slip, grab and chatter.

Transmissions filled from air or electrically powered lubricant containers can be underfilled. This

generally happens when the container delivery mechanism is improperly calibrated. Always check the lubricant level after filling to avoid an under fill condition.

A correct lubricant level check can only be made when the vehicle is level; use a drive-on hoist to ensure this. Also allow the lubricant to settle for a minute or so before checking. These recommendations will ensure an accurate check and avoid an under-or-overfill condition.

HARD SHIFTING

Hard shifting is usually caused by a low lubricant level, improper or contaminated lubricants, component damage, incorrect clutch adjustment, or by a damaged clutch pressure plate or disc.

Substantial lubricant leaks can result in gear, shift rail, synchro and bearing damage. If a leak goes undetected for an extended period, the first indications of a problem are usually hard shifting and noise.

Incorrect or contaminated lubricants can also contribute to hard shifting. The consequence of using non-recommended lubricants is noise, excessive wear, internal bind and hard shifting.

Improper clutch release is a frequent cause of hard shifting. Incorrect adjustment or a worn, damaged pressure plate or disc can cause incorrect release. If the clutch problem is advanced, gear clash during shifts can result.

Worn or damaged synchro rings can cause gear clash when shifting into any forward gear. In some new or rebuilt transmissions, new synchro rings may tend to stick slightly causing hard or noisy shifts. In most cases, this condition will decline as the rings wear-in.

TRANSMISSION NOISE

Most manual transmissions make some noise during normal operation. Rotating gears can generate a mild whine that may only be audible at extreme speeds.

Severe, obviously audible transmission noise is generally the result of a lubricant problem. Insufficient, improper, or contaminated lubricant can promote rapid wear of gears, synchros, shift rails, forks and bearings. The overheating caused by a lubricant problem, can also lead to gear breakage.

TRANSMISSION REMOVAL

(1) Shift transmission into first or third gear.
(2) Raise vehicle on a hoist.
(3) Disconnect necessary exhaust system components.
(4) Support transmission with adjustable jack stand.
(5) Disconnect rear cushion and mounting bracket from transmission, or transfer case (Fig. 1).

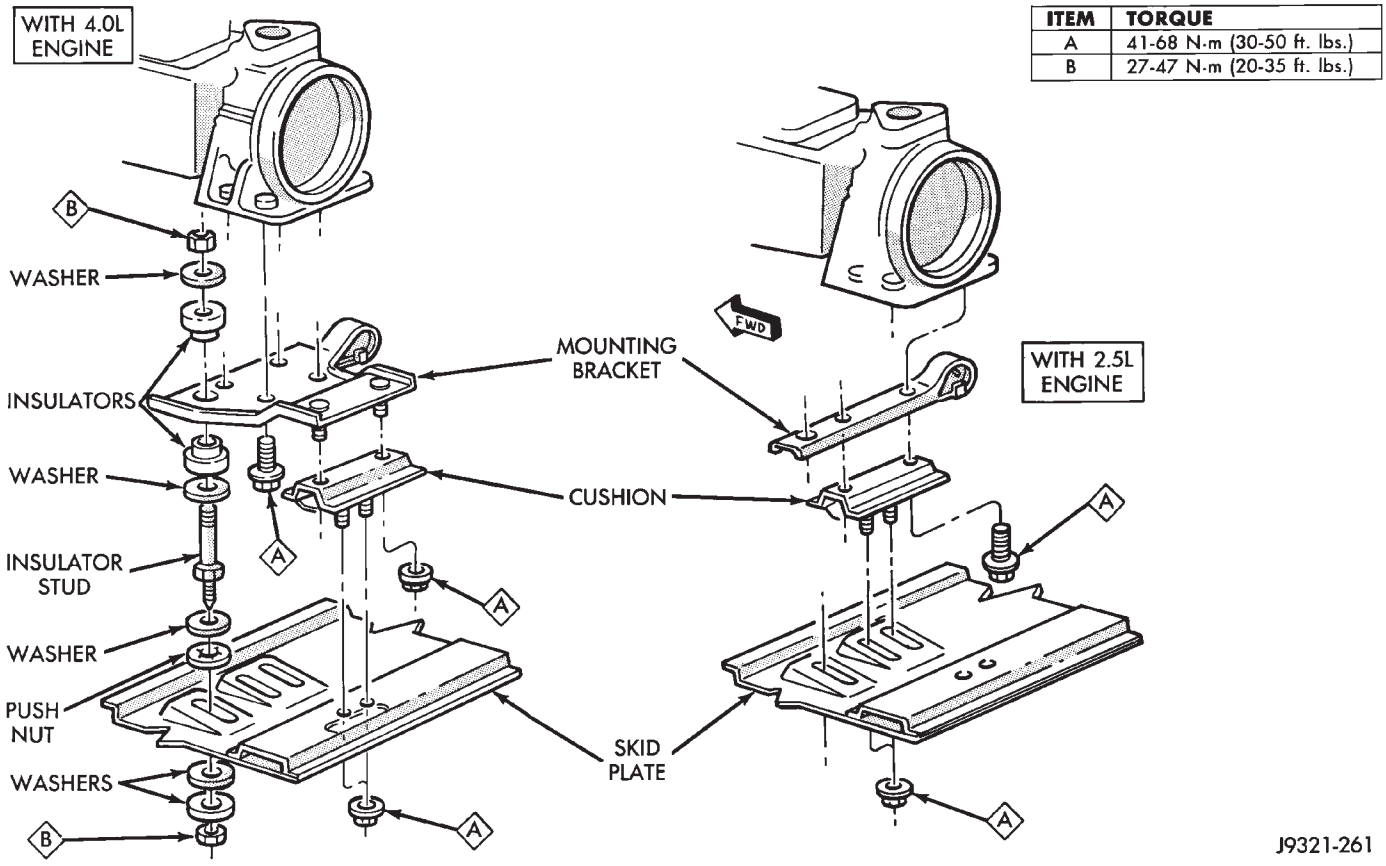

Fig. 1 Rear Mount Components (YJ Shown)

(6) On XJ, remove rear crossmember. On YJ, remove skid plate (Fig. 1).

(7) Disconnect transmission shift linkage, speedometer cable, transfer case vacuum lines and clutch hydraulic lines.

(8) Lower transmission-transfer case assembly no more than 7.6 cm (3 in.) for access to shift lever.

(9) Reach up and around transmission case and unseat shift lever dust boot from transmission shift tower (Fig. 2). Move boot upward on shift lever for access to lever retainer.

(10) Disengage shift lever as follows:

(a) Reach up and around transmission case and press shift lever retainer downward with your fingers.

(b) Turn retainer counterclockwise to release it.

(c) Lift lever and retainer out of shift tower (Fig. 2). **It is not necessary to remove shift lever from floorpan boot. Simply leave lever in place for later installation.**

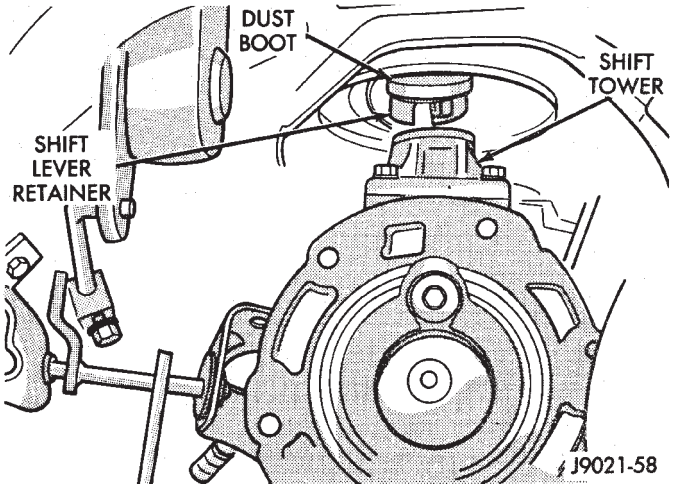

Fig. 2 Removing/Installing Shift Lever

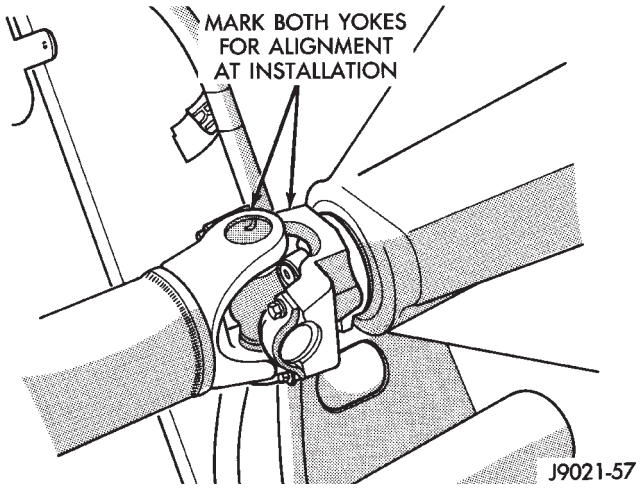

Fig. 3 Marking Propeller Shaft And Axle Yoke

(11) Mark front and rear propeller shafts for installation alignment (Fig. 2). Then remove both shafts.

(12) Remove crankshaft position sensor (Fig. 4).

(13) Disconnect transmission and transfer case vent hoses.

(14) Remove slave cylinder from clutch housing.

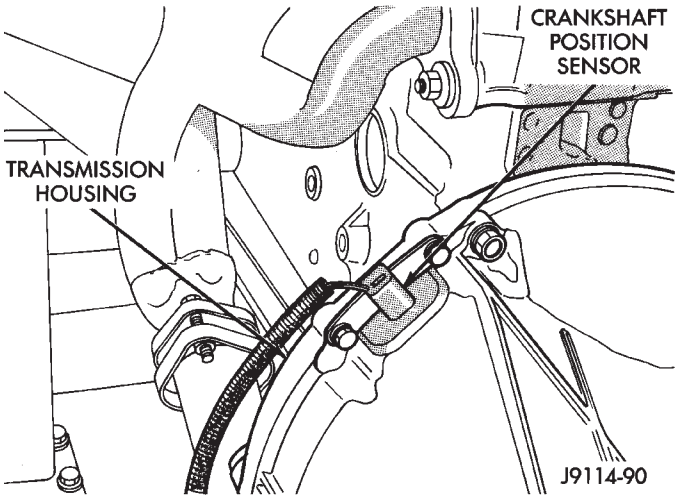

Fig. 4 Crankshaft Position Sensor Location

(15) Remove wire harnesses from clips/tie straps on transmission and transfer case.

(16) Support transmission-transfer case assembly with transmission jack. Secure assembly to jack with safety chains.

(17) Reposition adjustable jack stand under engine. Be sure to place wood block between jack and oil pan.

(18) Remove clutch housing brace rod.

(19) Remove clutch housing-to-engine bolts and remove transmission-transfer case assembly.

(20) Remove bolts attaching transmission to transfer case and separate components.

(21) Remove release bearing, fork and retainer clip.

(22) Remove clutch housing from transmission.

TRANSMISSION INSTALLATION

(1) Install clutch housing on transmission. Tighten housing bolts to 37 N·m (27 ft-lbs) torque.

(2) Lubricate contact surfaces of release fork, lever and pivot ball stud. Then install bearing, fork and clip in clutch housing.

(3) Mount transmission on transmission jack. Secure transmission with safety chains.

(4) Lightly lubricate pilot bearing and transmission input shaft splines with Mopar high temperature grease.

(5) Align transmission input shaft and clutch disc splines and install transmission.

(6) Install and tighten clutch housing-to-engine bolts to 38 N·m (28 ft. lbs.) torque. **Be sure housing is properly seated on engine before tightening bolts.**

(7) Lower transmission no more than 7.6 cm (3 in.) for access to the shift tower.

(8) Reach up and around the transmission and insert shift lever in shift tower. Press lever retainer downward and turn it clockwise to lock it in place. Then install lever dust boot on shift tower.

(9) Install and connect crankshaft position sensor.

(10) Align and install transfer case on transmission. Tighten transfer case attaching nuts to 35 N·m (26 ft. lbs.) torque.

(11) Connect transfer case vacuum and vent hoses.

(12) Install and connect transfer case shift linkage. Check and adjust linkage if necessary.

(13) Secure wire harnesses to clips/tie straps on transmission and transfer case.

(14) Connect backup light switch wires.

(15) Install clutch slave cylinder.

(16) Connect vehicle speed sensor wires.

(17) On XJ, install rear crossmember and attach cushion and bracket. Tighten crossmember-to-frame bolts to 41 N·m (30 ft. lbs.) torque. Tighten transmission-to-rear cushion and bracket bolts/nuts to 45 N·m (33 ft. lbs.) torque.

(18) On YJ, install rear cushion and bracket and skid plate. Tighten attaching bolts/nuts to indicated torque (Fig. 1).

(19) Align and install front/rear propeller shafts. Tighten shaft U-joint clamp bolts to 19 N·m (170 in. lbs.) torque.

(20) On XJ, install skid plate if removed. Tighten bolts to 42 N·m (31 ft. lbs.) torque. Tighten stud nuts to 17 N·m (150 in. lbs.) torque.

(21) Top off transmission and transfer lubricant levels.

(22) Remove supports and lower vehicle.

TRANSMISSION DISASSEMBLY AND OVERHAUL

ADAPTER HOUSING REMOVAL

(1) Remove release bearing, release lever and release fork from clutch housing. Then remove clutch housing from transmission.

(2) Remove backup light switch. Then remove drain plug (Fig. 1) and drain transmission lubricant into pan.

(3) Remove shift tower bolts and remove tower from adapter or extension housing (Fig. 2).

(4) Remove gasket from shift tower (Fig. 3).

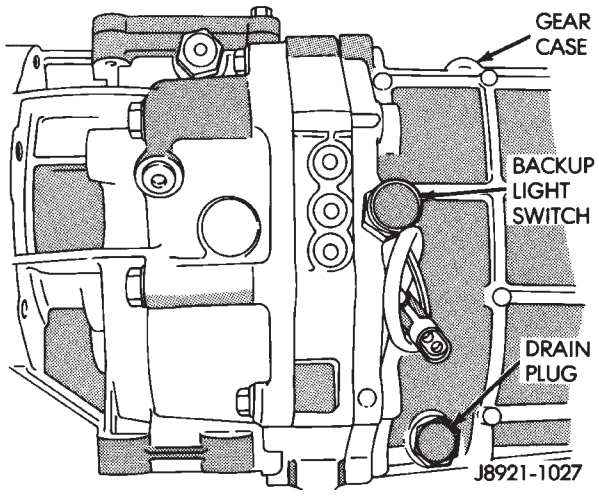

Fig. 1 Drain Plug And Backup Light Switch Location

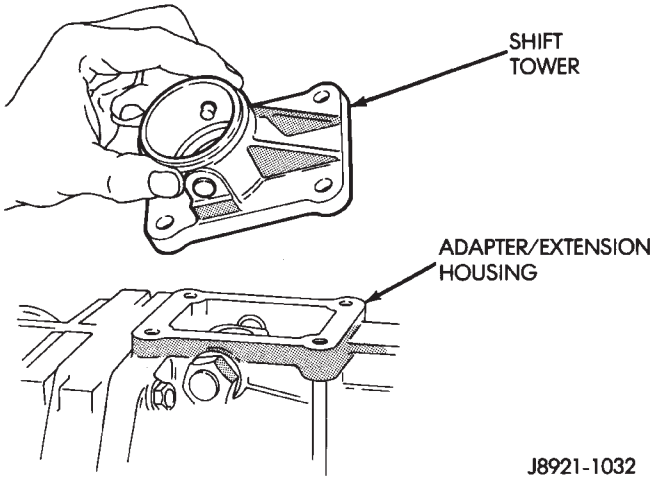

Fig. 2 Shift Tower Removal/Installation

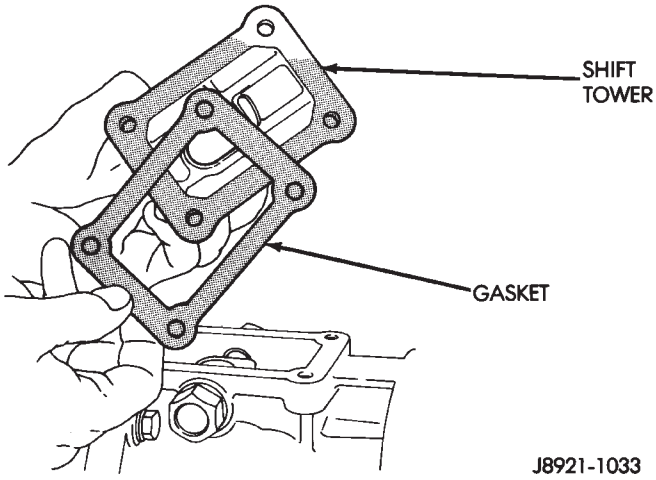

Fig. 3 Shift Tower Gasket Removal/Installation

(5) Remove shift arm retainer bolt (Fig. 4).

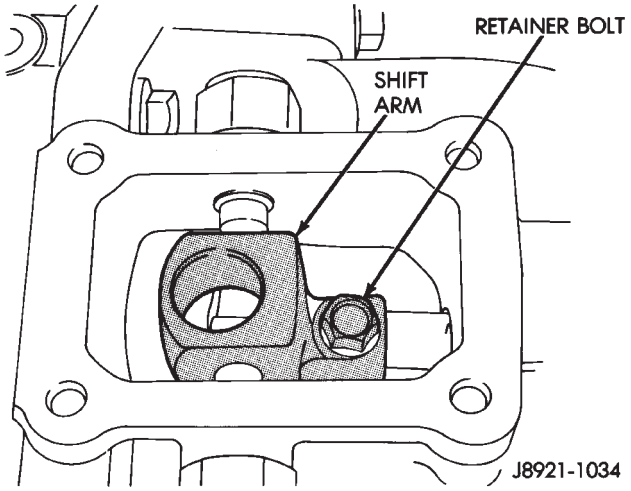

Fig. 4 Shift Arm Retainer Bolt Removal/Installation

(6) Loosen and remove restrictor pins (Fig. 5).

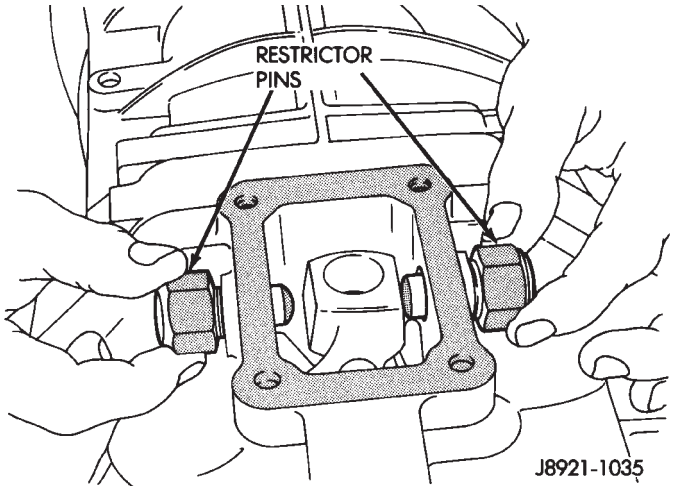

Fig. 5 Removing/Installing Restrictor Pins

(7) Remove shift arm shaft plug (Fig. 6).

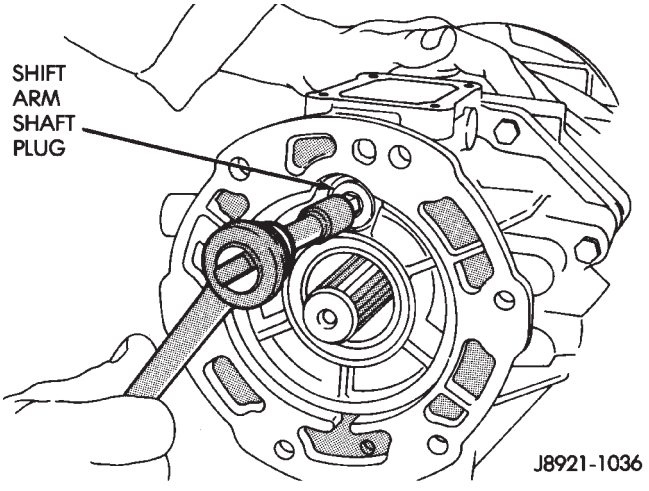

Fig. 6 Removing/Installing Shift Lever Shaft Plug

(8) Remove shift arm shaft with large magnet (Fig. 7).

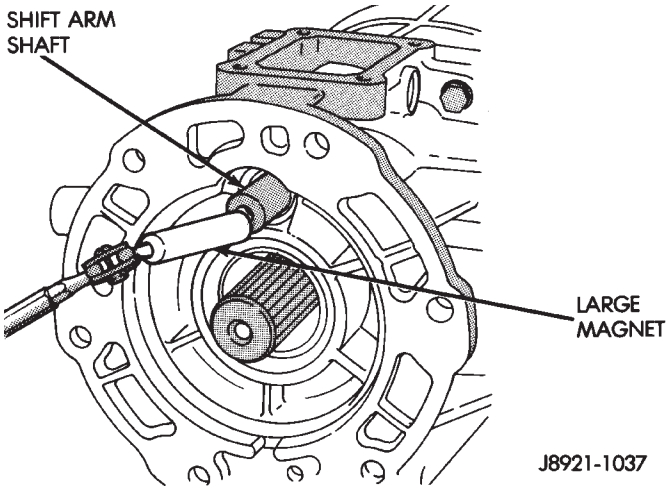

Fig. 7 Removing/Installing Shift Lever Shaft

(9) Remove shift arm (Fig. 8).

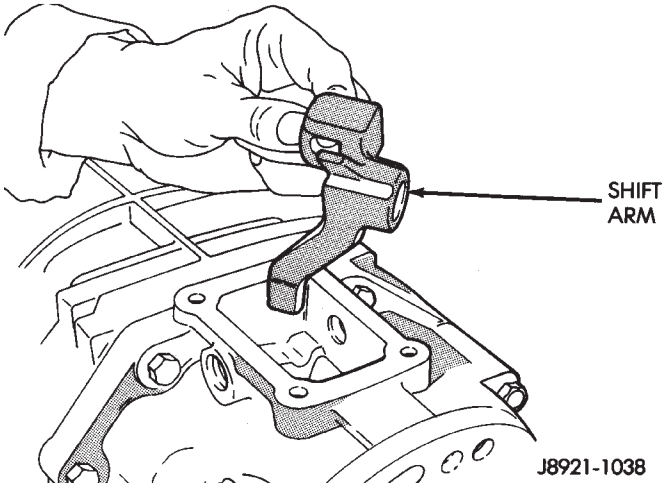

Fig. 8 Shift Arm Removal/Installation

(10) Remove plug for reverse shift head lock ball. Plug is at right side of adapter housing near backup light switch (Fig. 9).

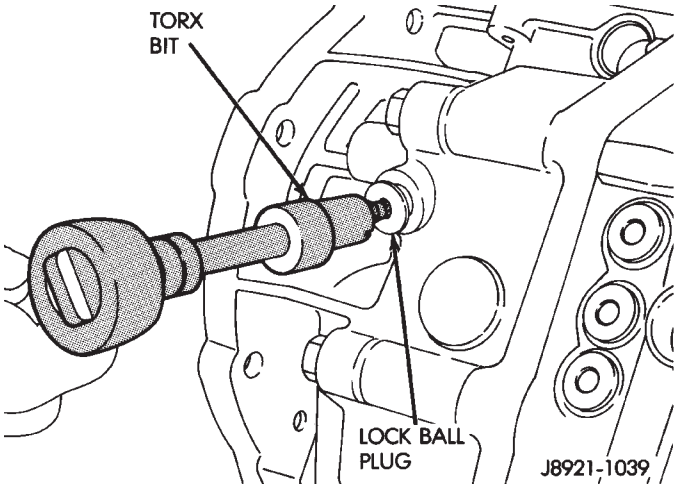

Fig. 9 Removing/Installing Lock Ball Plug

(11) Remove lock ball spring with pencil magnet (Fig. 10).

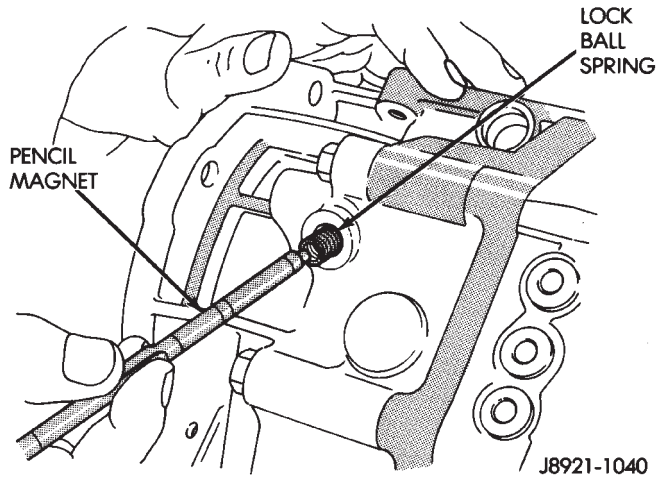

Fig. 10 Removing/Installing Lock Ball Spring

(12) Remove shift head lock ball with pencil magnet (Fig. 11).

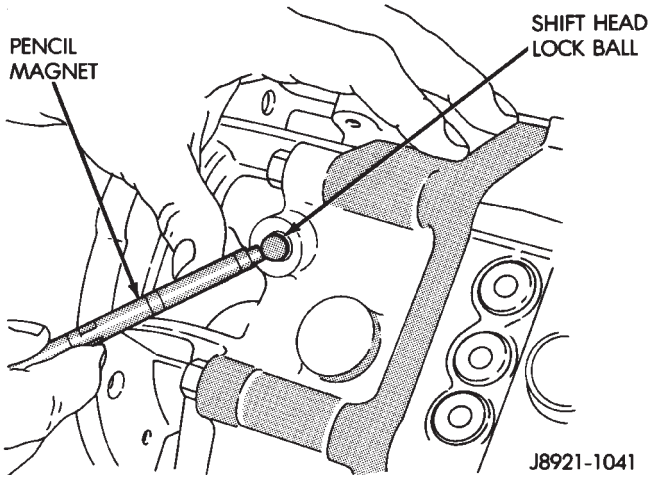

Fig. 11 Removing/Installing Shift Head Lock Ball

(13) Remove adapter housing bolts (Fig. 12).

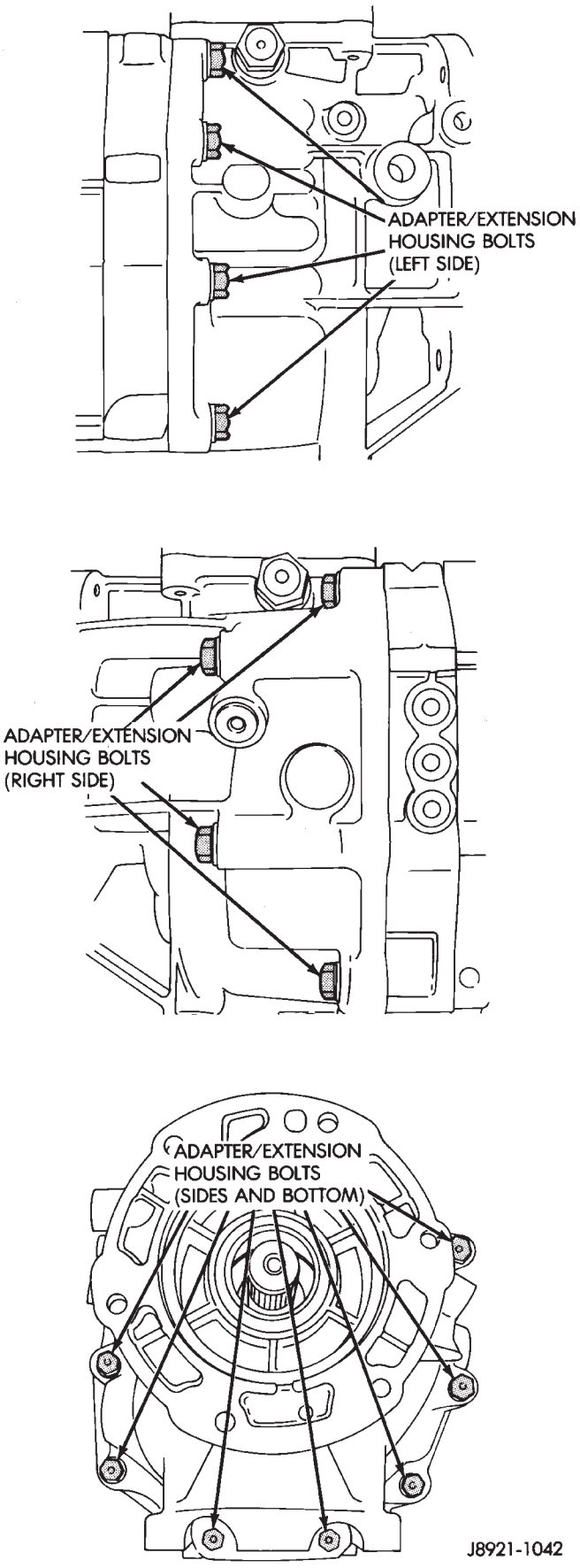

Fig. 12 Adapter Housing Bolt Locations

(14) Loosen adapter/extension housing with rubber mallet (Fig. 13).

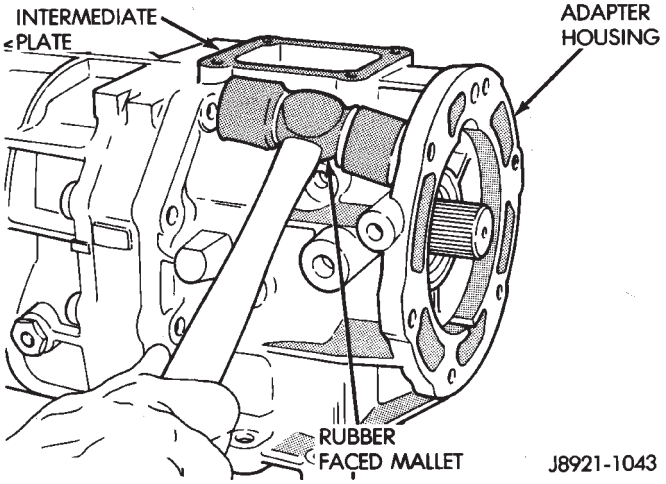

Fig. 13 Loosening Adapter Housing

(15) Remove housing after loosening it (Fig. 14)

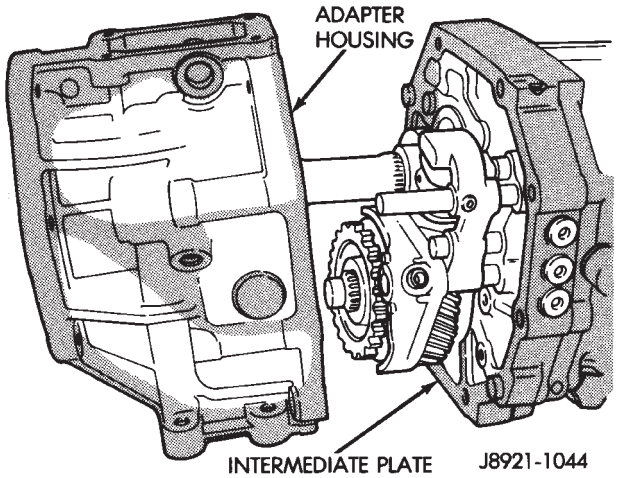

Fig. 14 Adapter Housing Removal

(16) Remove adapter housing oil seal with a pry tool (Fig. 15).

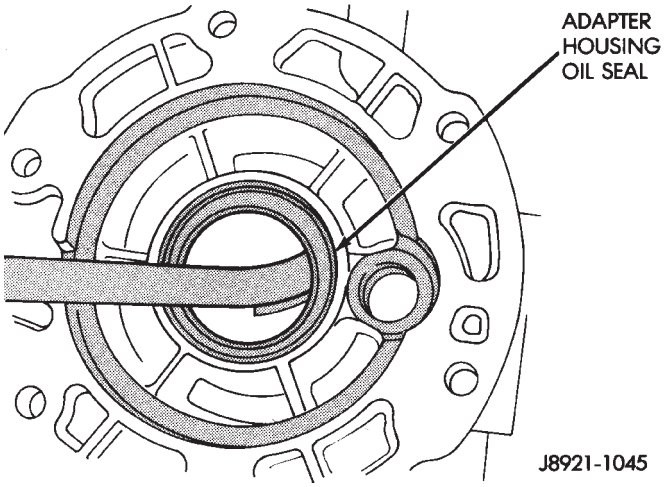

Fig. 15 Removing Adapter Housing Seal

GEAR CASE REMOVAL

(1) Remove bearing retainer bolts and remove retainer (Fig. 16).

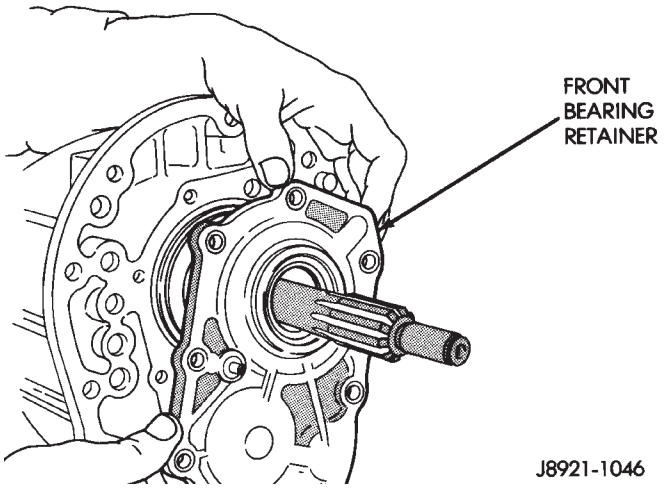

Fig. 16 Front Bearing Retainer Removal

(2) Remove retainer oil seal with pry tool (Fig. 17).

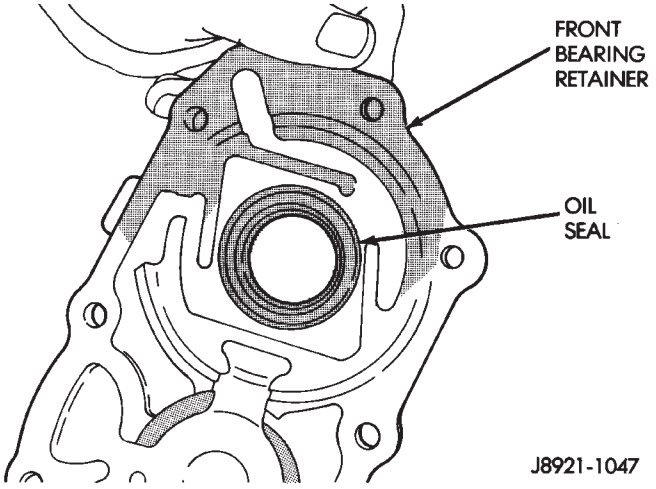

Fig. 17 Front Bearing Retainer Seal Location

(3) Remove input shaft bearing snap ring (Fig. 18).

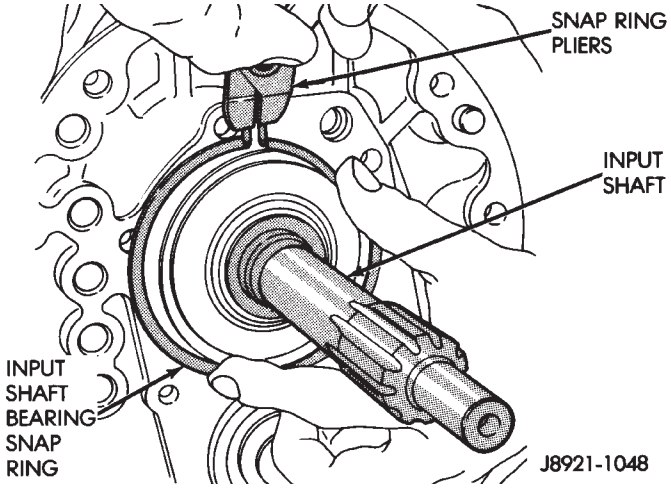

Fig. 18 Removing Input Shaft Bearing Snap Ring

(4) Remove cluster gear front bearing snap ring (Fig. 19).

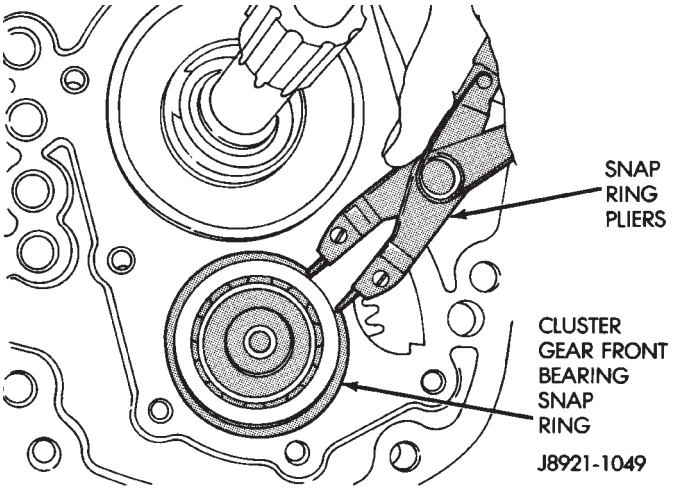

Fig. 19 Removing Cluster Gear Front Bearing Snap Ring

(5) Loosen gear case by tapping it away from intermediate plate with rubber mallet (Fig. 20).

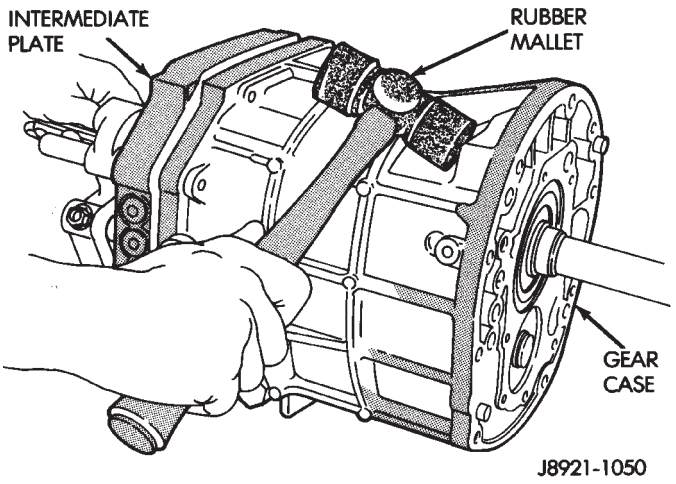

Fig. 20 Loosening Gear Case

(6) Remove gear case from geartrain and intermediate plate (Fig. 21).

(7) Remove speedometer gear snap ring and remove speedometer gear and spacer from output shaft.

FIFTH GEAR AND SYNCHRO ASSEMBLY REMOVAL

(1) Remove three lock ball plugs from intermediate plate (Fig. 22).

(2) Remove three lock ball springs and lock balls from intermediate plate with pencil magnet (Fig. 23).

(3) Mount intermediate plate and geartrain assembly in vise as follows:

(a) Insert two spare bolts in one bottom bolt hole in intermediate plate. Insert bolts from opposite sides of plates (Fig. 24).

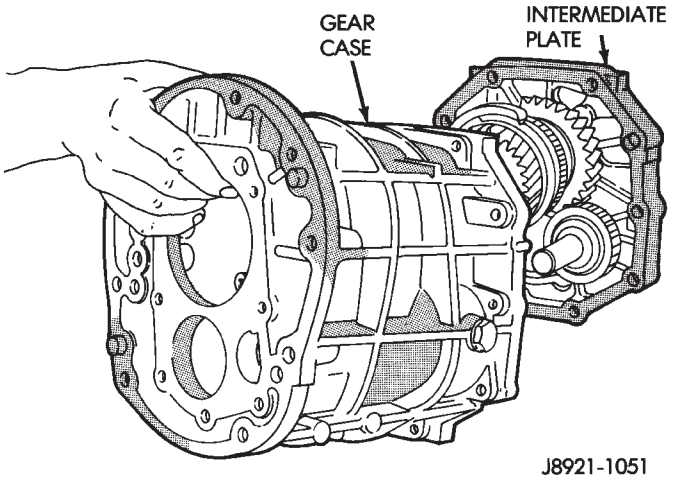

Fig. 21 Gear Case Removal

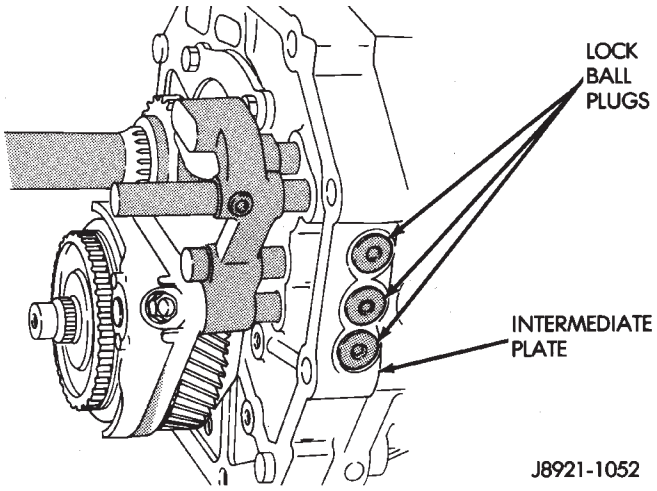

Fig. 22 Lock Ball Plug Locations

(b) Install enough flat washers under each bolt head to prevent bolts from touching (Fig. 24).

(c) Tape bolts and washers in place and mount intermediate plate in vise (Fig. 24).

(d) Clamp vise jaws securely against bolt heads (Fig. 24). **Do not clamp vise jaws on intermediate plate. Clamp only on bolt heads.**

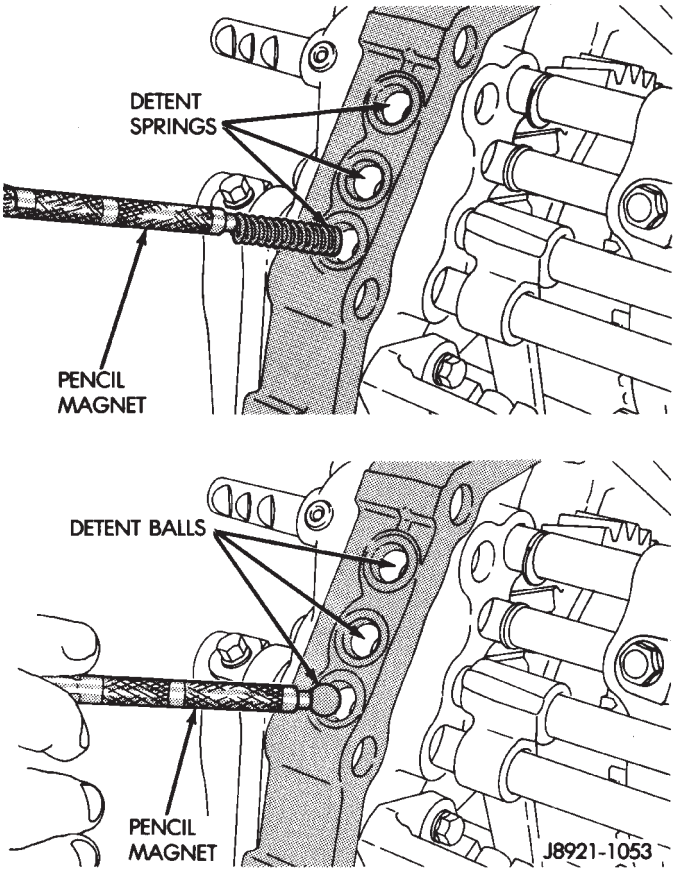

Fig. 23 Removing/Installing Lock Ball And Spring

(4) Remove fifth gear snap ring (Fig. 25). Retain snap ring for assembly reference. It is a select fit component.

(5) Remove E-ring that secures reverse shift arm to fork (Fig. 26).

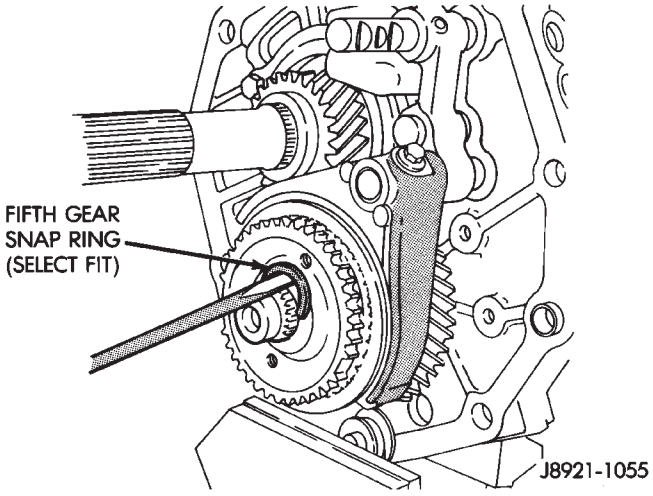

Fig. 25 Fifth Gear Snap Ring Removal

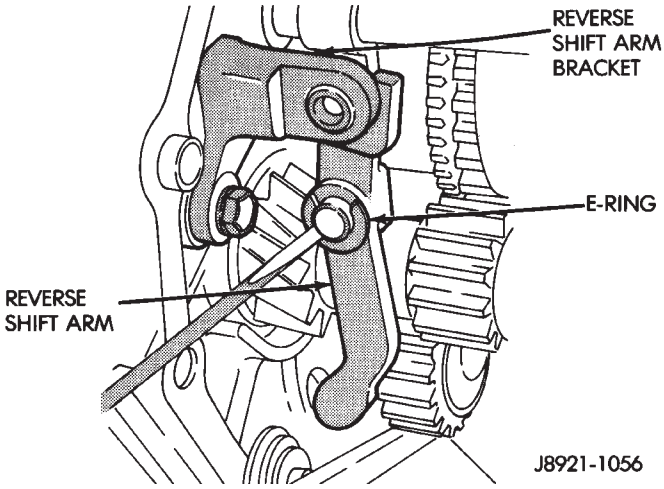

Fig. 26 Reverse Shift Arm E-Ring Removal

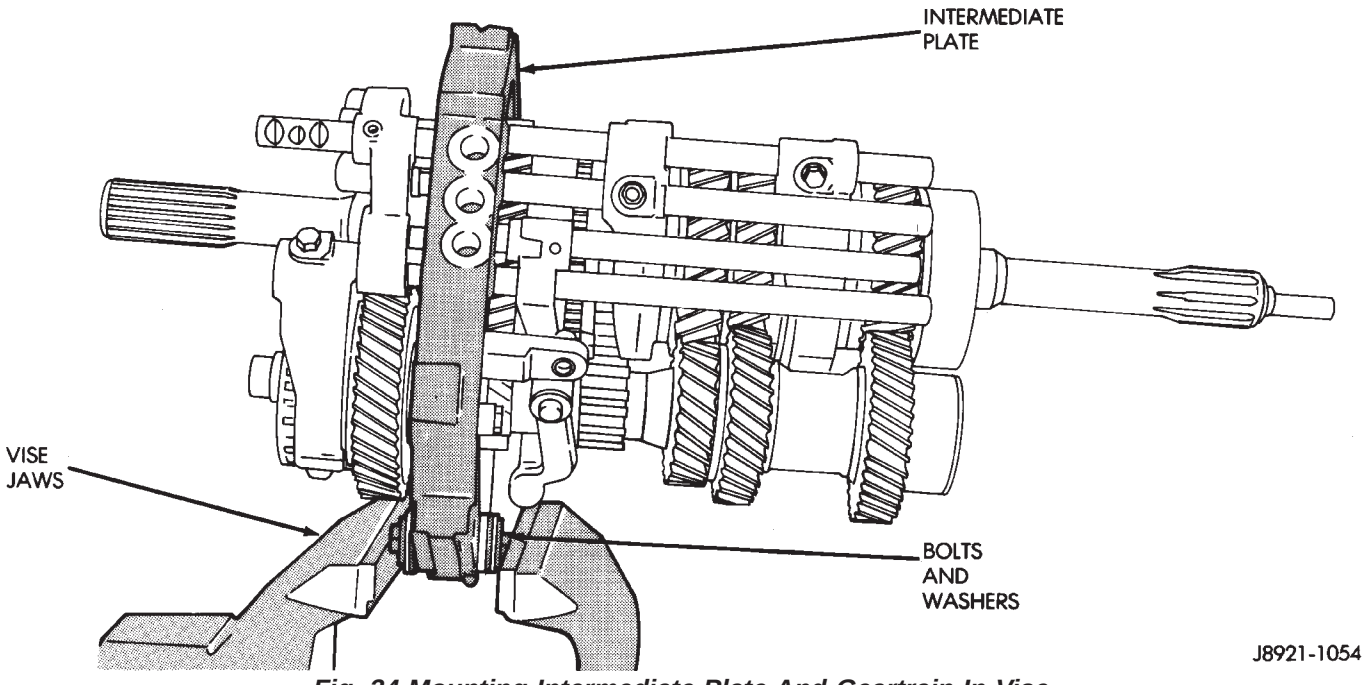

Fig. 24 Mounting Intermediate Plate And Geartrain In Vise

(6) Remove bolts attaching reverse shift arm bracket to intermediate plate. Then remove bracket (Fig. 27).

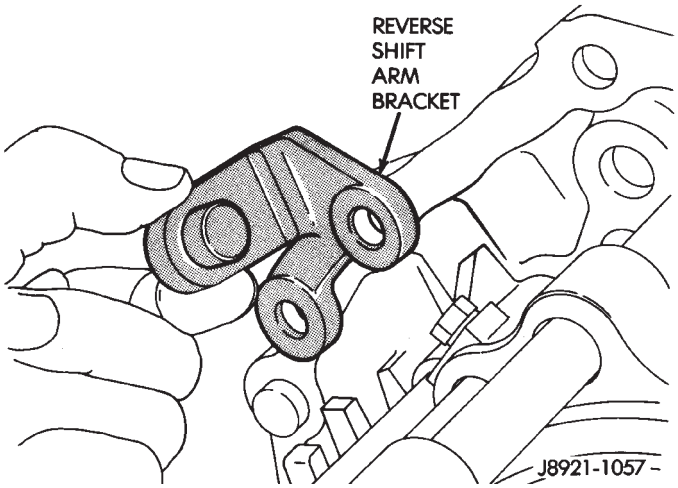

Fig. 27 Reverse Shift Arm Bracket Removal

(7) Remove reverse shift arm and shoe (Fig. 28).

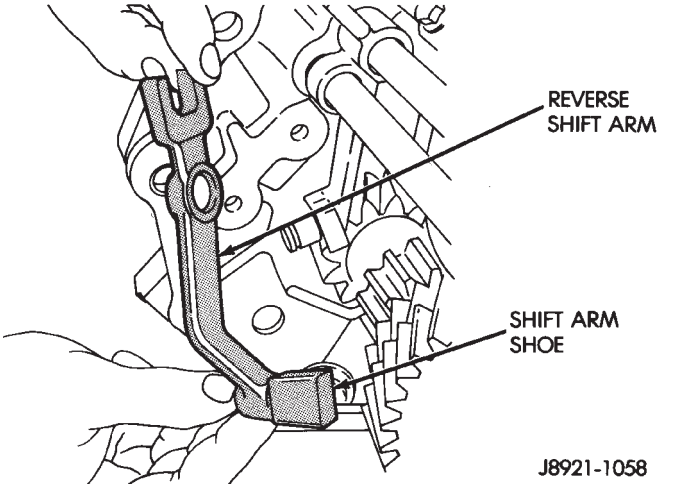

Fig. 28 Reverse Shift Arm And Shoe Removal

(8) Remove fifth gear shift fork set screw (Fig. 29).

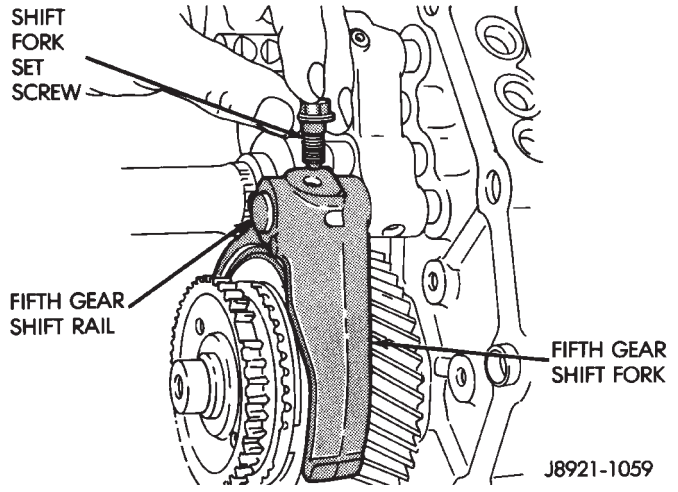

Fig. 29 Fifth Gear Fork Set Screw Removal

(9) Move fifth gear shift rail forward until it clears shift fork.

(10) Remove fifth gear shift fork from synchro sleeve (Fig. 30).

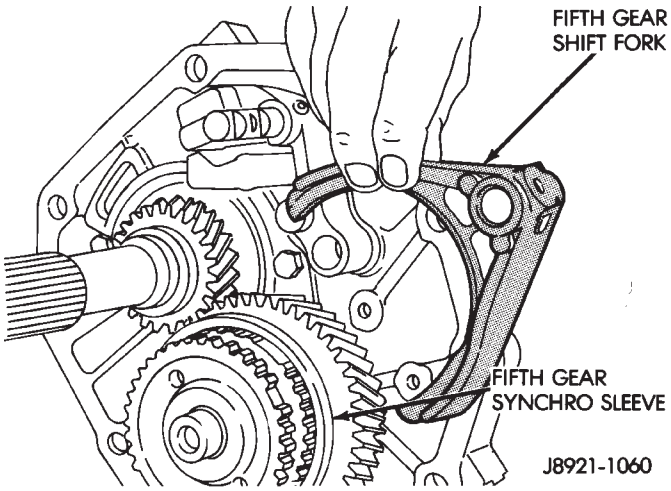

Fig. 30 Fifth Gear Shift Fork Removal

(11) Remove reverse shift rail and reverse shift head as assembly (Fig. 31).

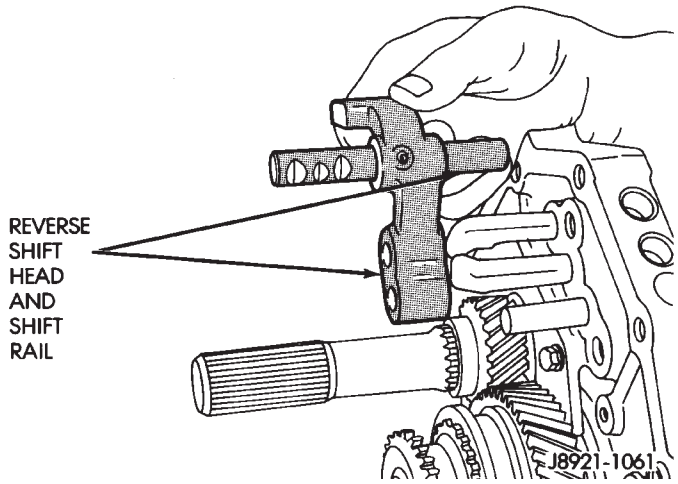

Fig. 31 Reverse Shift Head And Rail Removal

(12) Measure thrust clearance between counter fifth gear and thrust ring with feeler gauge. Clearance should be 0.10 to 0.40 mm (0.003 to 0.019 in.). If clearance exceeds limits, gear and/or ring will have to be replaced.

(13) Loosen fifth spline gear with standard two-jaw puller (Fig. 32). **Position puller jaws behind fifth counter gear as shown.**

(14) Remove fifth spline gear (Fig. 33).

(15) Remove fifth gear synchro ring (Fig. 34).

(16) Remove fifth gear synchro and sleeve assembly (Fig. 35).

(17) Remove counter fifth gear thrust ring (Fig. 36).

(18) Remove thrust ring lock ball with pencil magnet (Fig. 37).

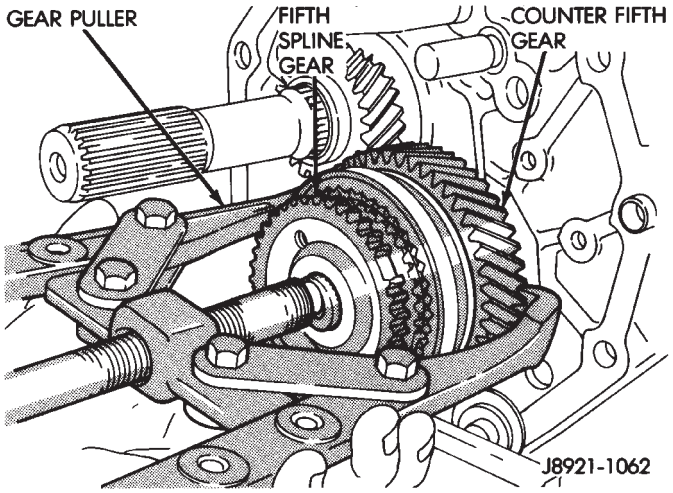

Fig. 32 Loosening Fifth Spline Gear

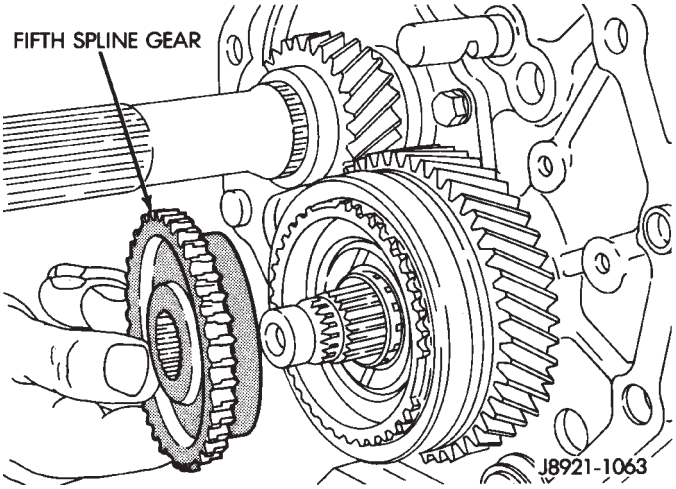

Fig. 33 Fifth Spline Gear Removal

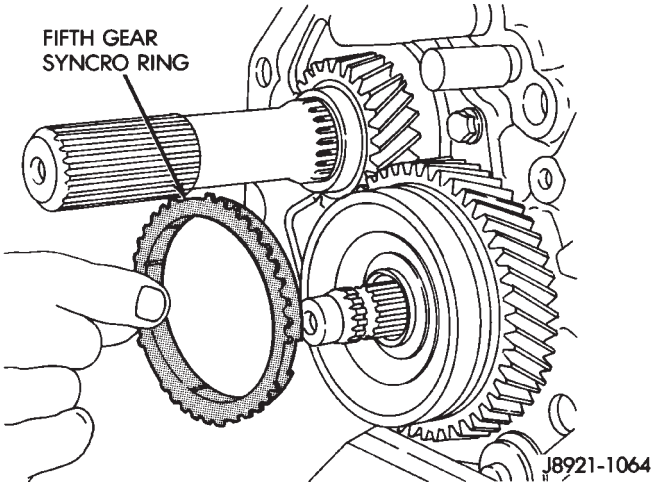

Fig. 34 Fifth Gear Synchro Ring Removal

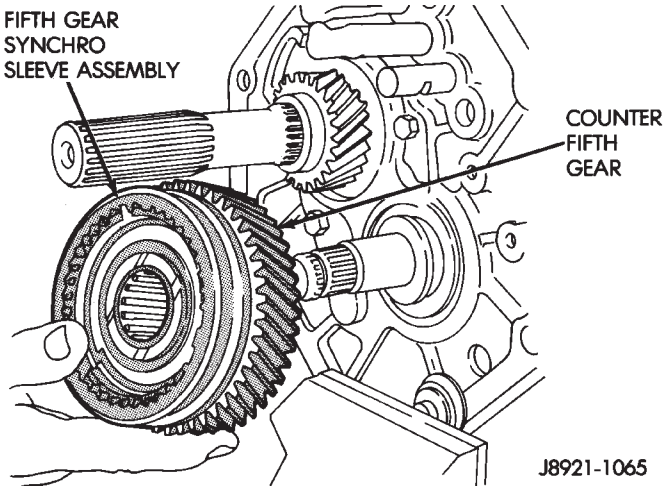

Fig. 35 Counter Fifth Gear And Synchro Assembly Removal

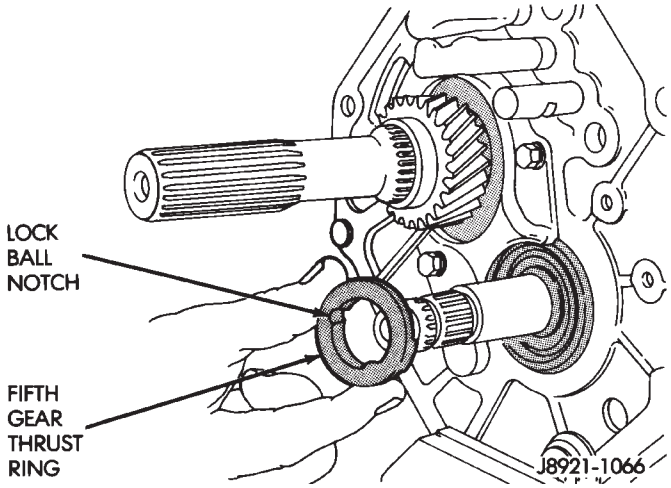

Fig. 36 Fifth Gear Thrust Ring Removal

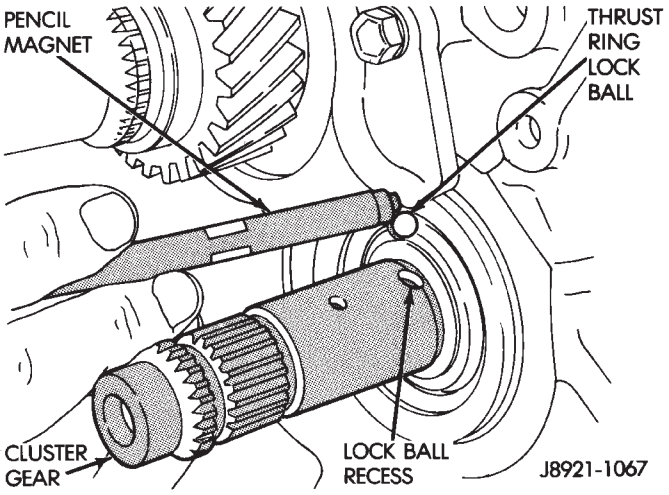

Fig. 37 Thrust Ring Lock Ball Removal

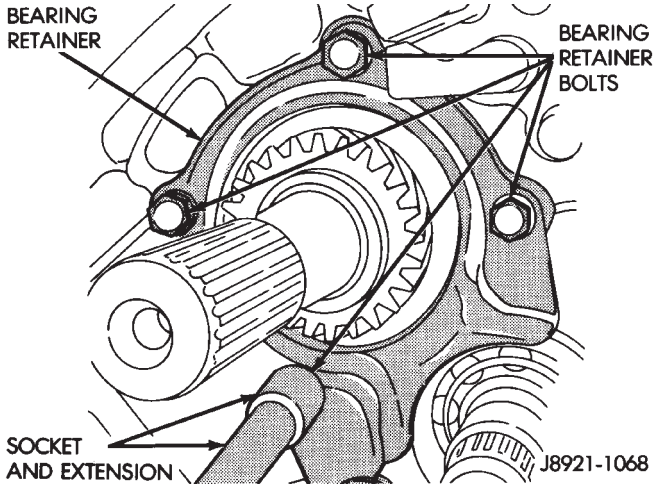

Fig. 38 Output Shaft Rear Bearing Retainer Bolt Removal

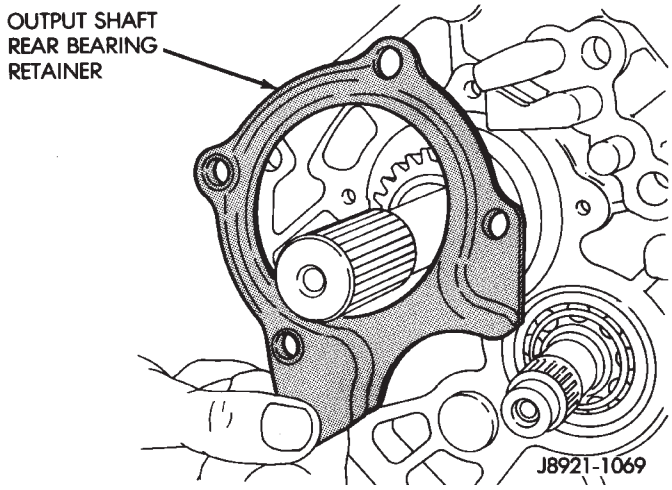

Fig. 39 Output Shaft Rear Bearing Retainer Removal

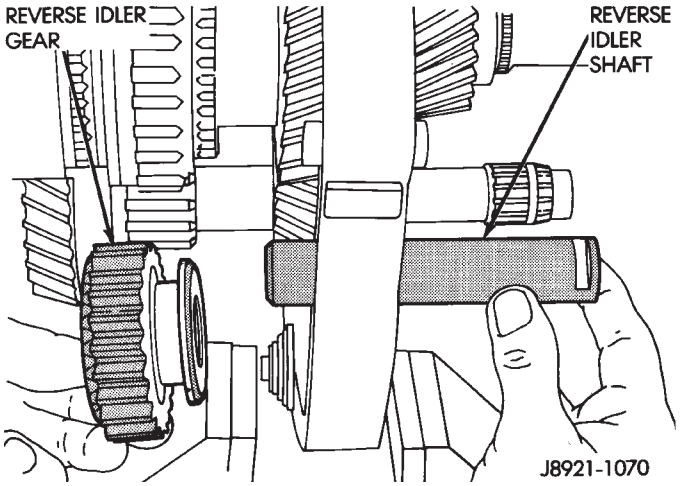

Fig. 40 Reverse Idler Gear And Shaft Removal

(19) Remove bolts attaching output shaft rear bearing retainer to intermediate plate (Fig. 38).

(20) Remove rear bearing retainer (Fig. 39).

(21) Remove reverse gear and shaft (Fig. 40).

SHIFT RAIL AND FORK REMOVAL

There are a total of five shift rails in the AX 15 transmission. The 1-2, 3-4, fifth gear and front reverse shift rails are shown in Figure 41.

Two shift rails are used for reverse gear range. The front reverse rail is at the forward side of the intermediate plate (Fig. 41). The short rear reverse rail and reverse shift head are at the rear side of the intermediate plate.

It is not necessary to remove the shift rails if they are in good condition. Only the shift forks need be removed for access to the shafts and gears.

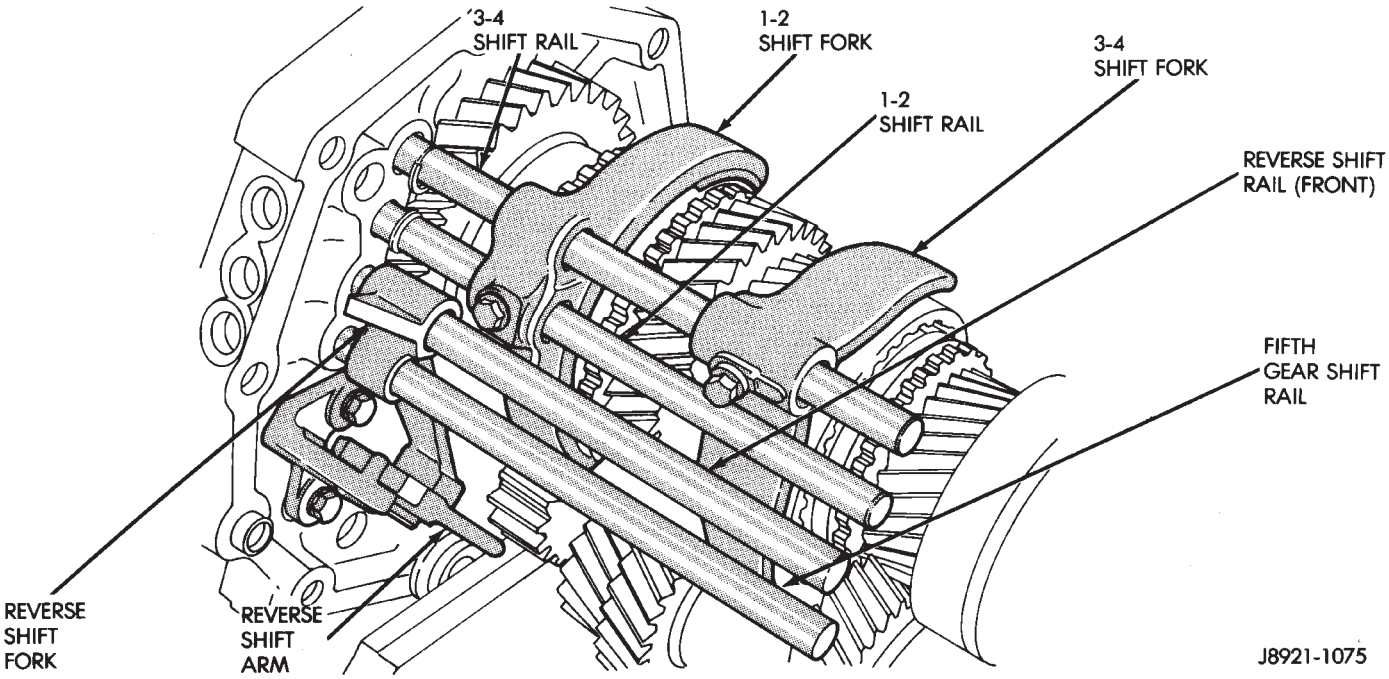

Fig. 41 Shift Rail Identification

(1) Remove fifth gear shift rail (Fig. 41). Catch lock ball in your hand as rail comes out of intermediate plate.

(2) Remove 1-2 and 3-4 shift rail C-rings with two screwdrivers of equal size and length (Fig. 42).

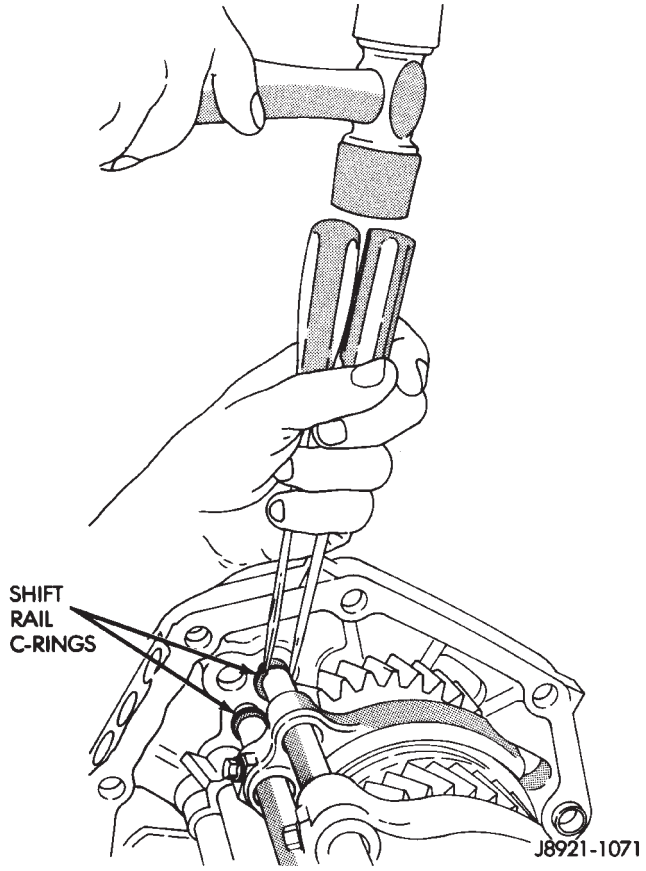

Fig. 42 Shift Rail C-Ring Removal

(3) Remove shift fork set screws (Fig. 43).

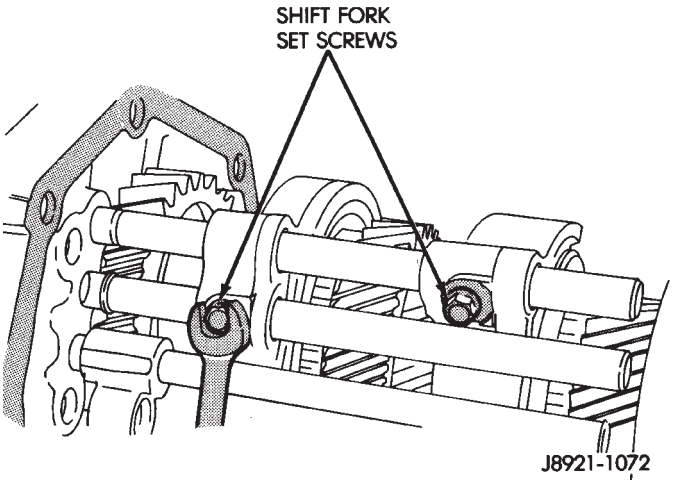

Fig. 43 Shift Fork Set Screw Removal

(4) Remove 3-4 shift rail from shift fork and intermediate plate (Fig. 44).

(5) Remove 3-4 shift rail interlock plug from intermediate plate with magnet (Fig. 45).

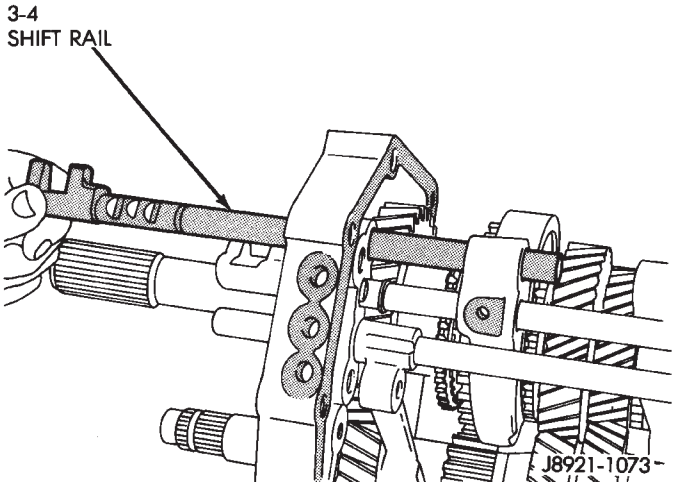

Fig. 44 Removing 3-4 Shift Rail

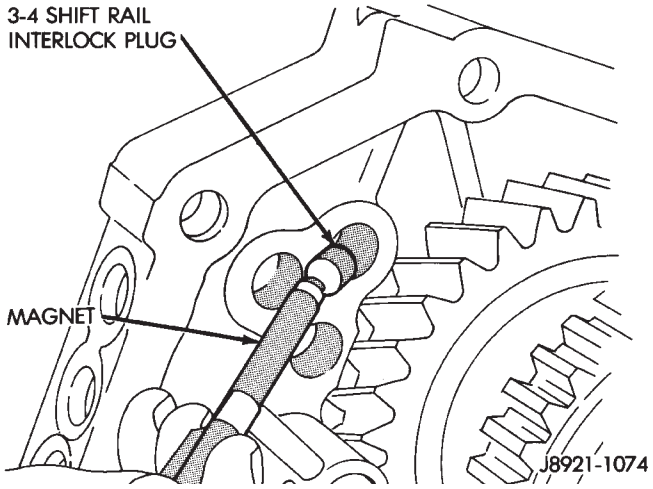

Fig. 45 Removing 3-4 Shift Rail Interlock Plug

(6) Remove 1-2 shift rail from shift fork and intermediate plate (Fig. 46).

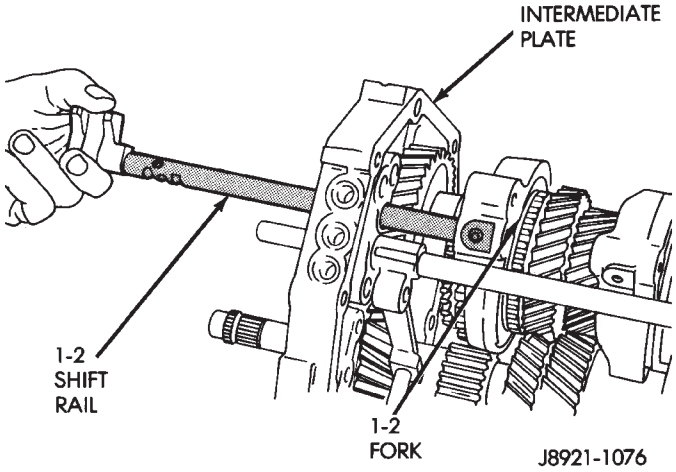

Fig. 46 Removing 1-2 Shift Rail

(7) Remove 1-2 shift rail interlock pin from shift rail (Fig. 47).

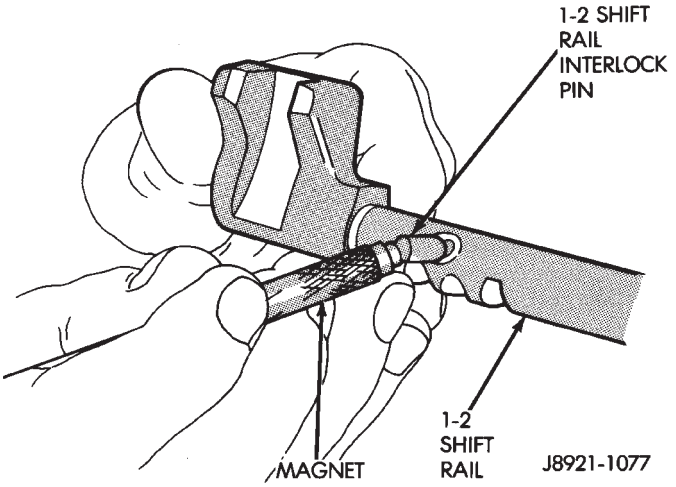

Fig. 47 Removing 1-2 Shift Rail Interlock Pin

(8) Remove 1-2 shift rail interlock plug from intermediate plate (Fig. 48).

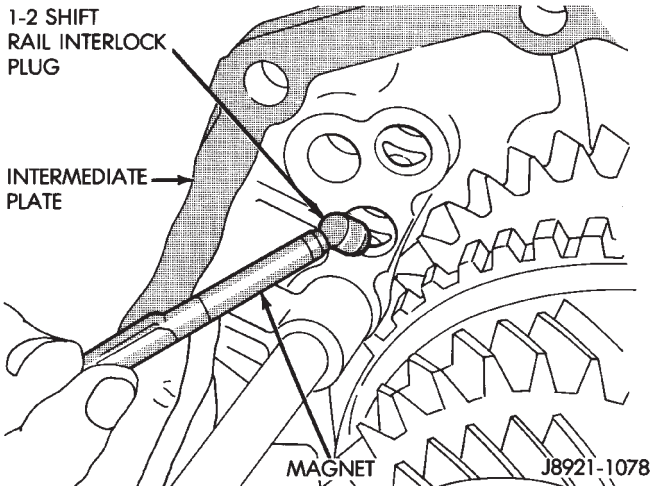

Fig. 48 Removing 1-2 Shift Rail Interlock Plug

(9) Lift reverse shift fork upward and remove fifth gear shift rail lock ball (Fig. 49).

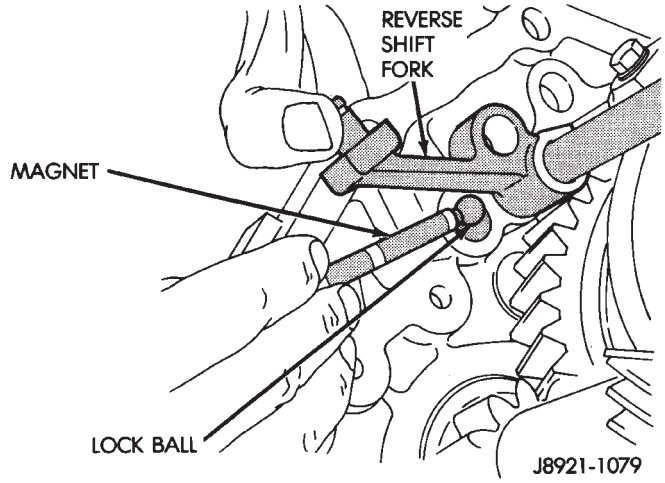

Fig. 49 Fifth Gear Shift Rail Lock Ball Removal

(10) Remove 3-4 shift fork (Fig. 50).

(11) Remove 1-2 shift fork (Fig. 50).

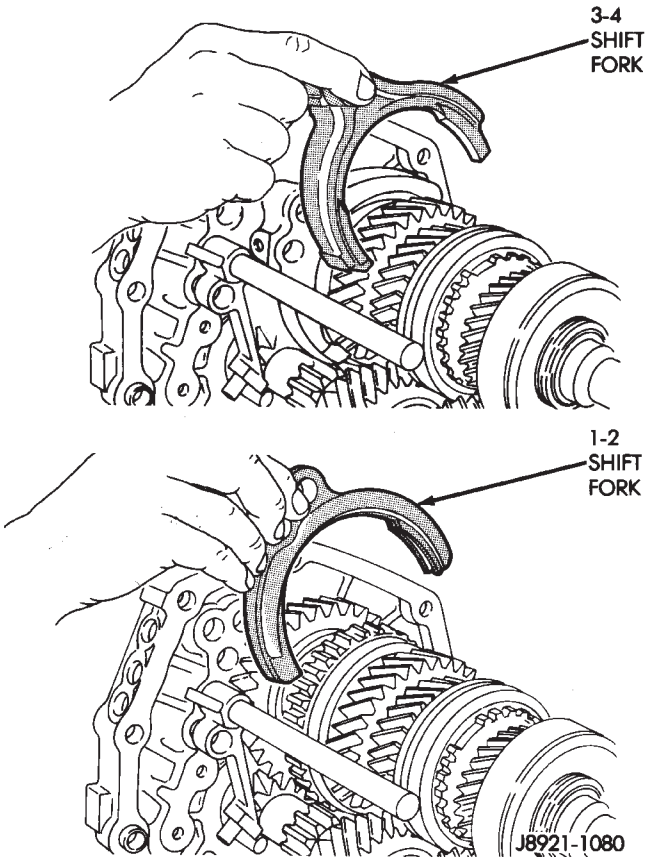

Fig. 50 Shift Fork Removal

(12) Remove reverse shift rail C-ring with two equal length and size screwdrivers (Fig. 51).

(13) Remove reverse shift rail and fork (Fig. 52).

(14) Remove interlock pin from reverse shift rail (Fig. 53).

(15) Position shift rails, shift forks, lock balls, interlock plugs and interlock pins on the workbench in order of removal. This will help in identifying components during inspection and assembly.

OUTPUT SHAFT AND CLUSTER GEAR REMOVAL

(1) Remove output shaft rear bearing snap ring (Fig. 54).

(2) Remove cluster gear rear bearing snap ring (Fig. 54).

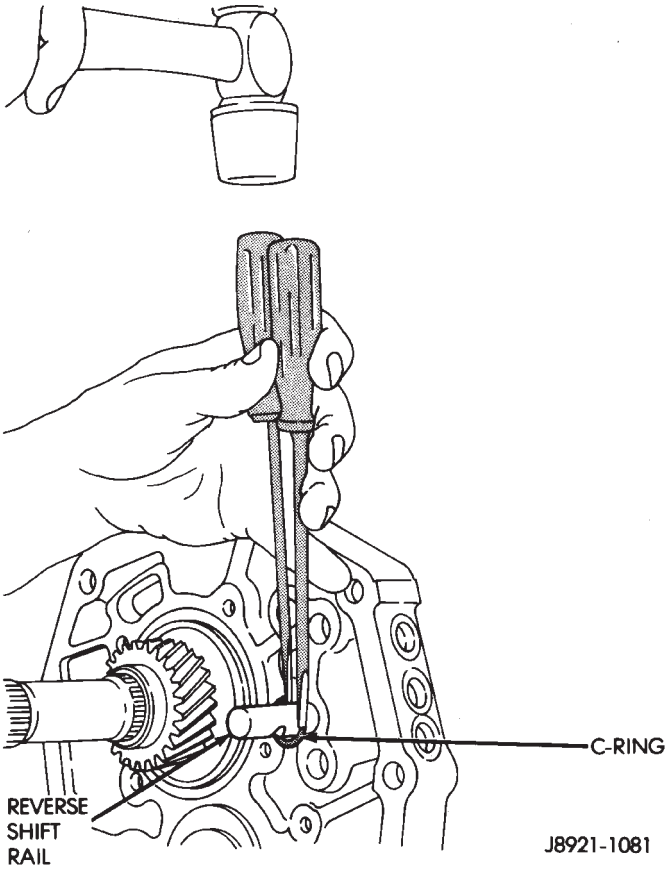

Fig. 51 Reverse Shift Rail C-Ring Removal

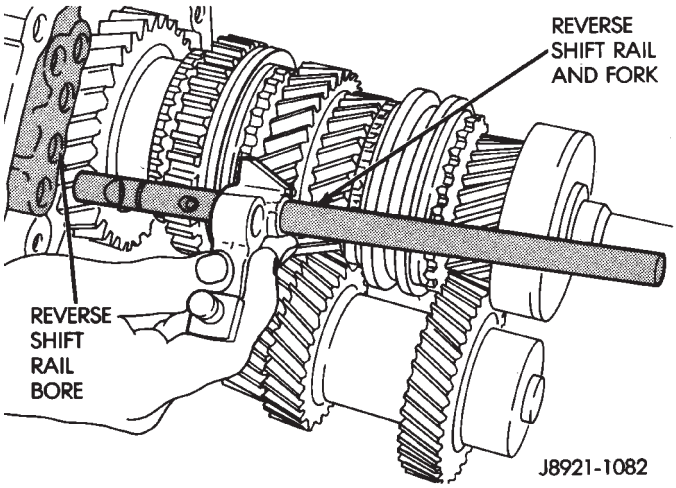

Fig. 52 Reverse Shift Rail And Fork Removal

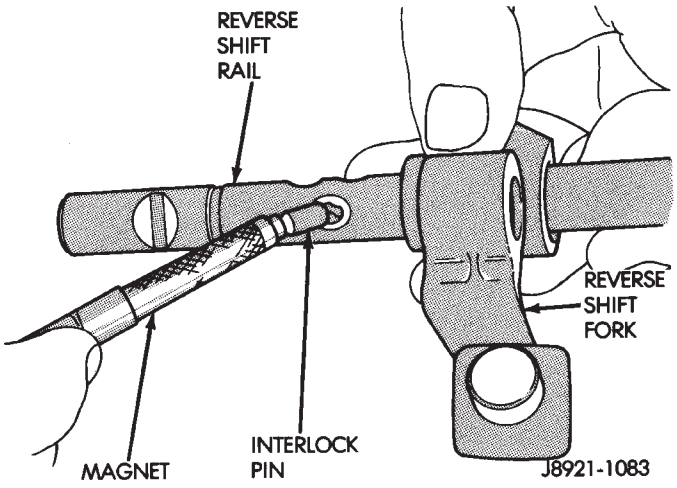

Fig. 53 Reverse Shift Rail Interlock Pin Removal

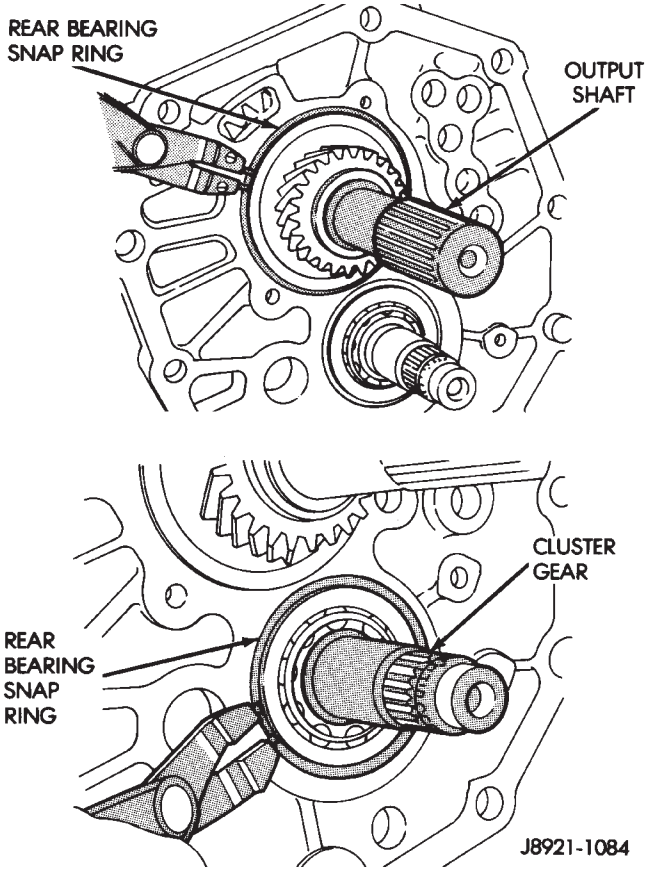

Fig. 54 Removing Bearing Snap Rings

(3) Tap end of output shaft with mallet to unseat and start rear bearing out of intermediate plate (Fig. 55).

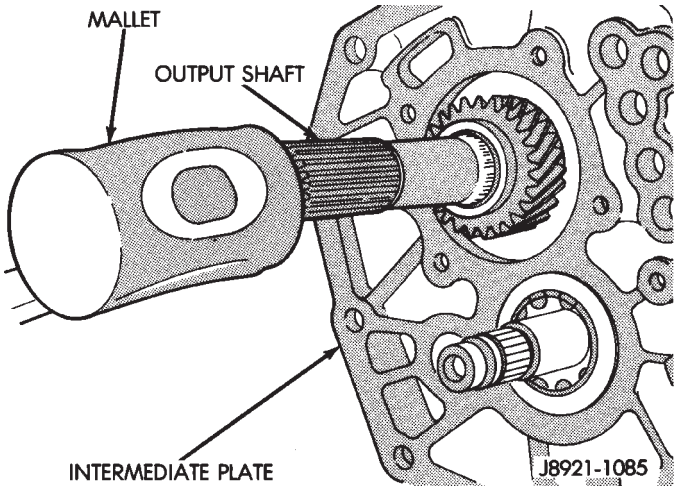

Fig. 55 Unseating Output Shaft Rear Bearing

(4) Remove output shaft by rocking it lightly until rear bearing comes out of intermediate plate (Fig. 56).

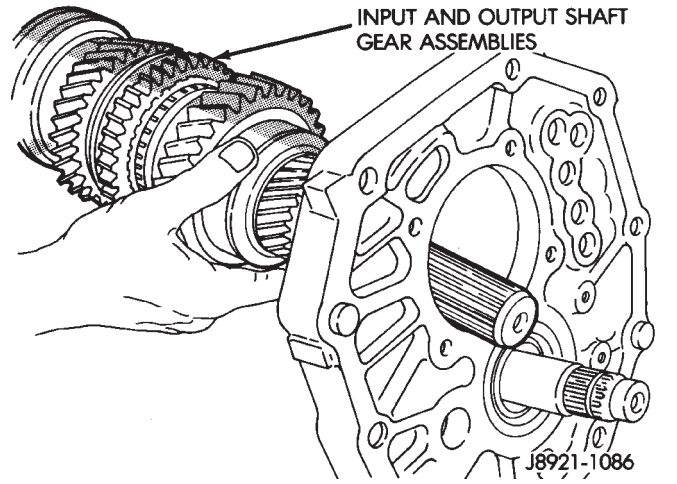

Fig. 56 Input And Output Shaft Removal

(5) Remove cluster gear by pulling it straight out of rear bearing (Fig. 57).

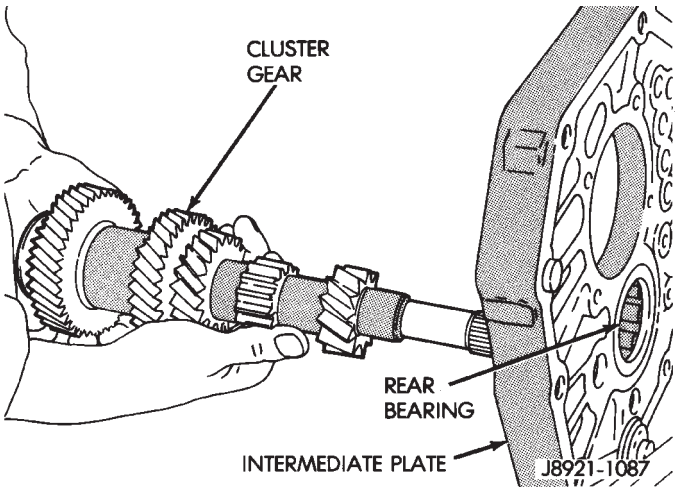

Fig. 57 Cluster Gear Removal

(6) Remove cluster gear rear bearing from intermediate plate (Fig. 58).

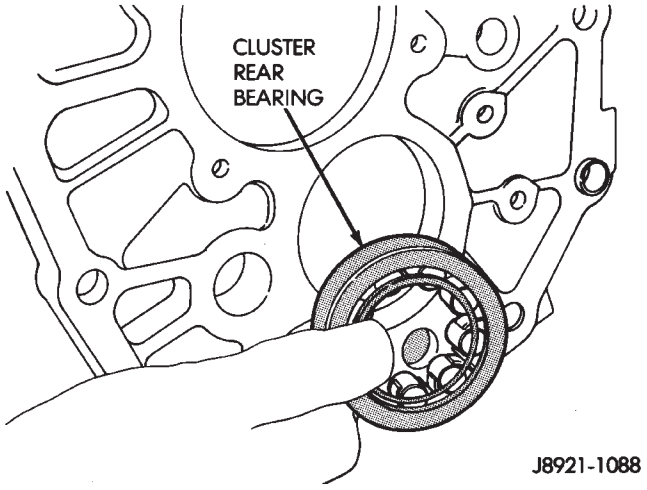

Fig. 58 Removing Cluster Gear Rear Bearing

(7) Remove input shaft from output shaft (Fig. 59).

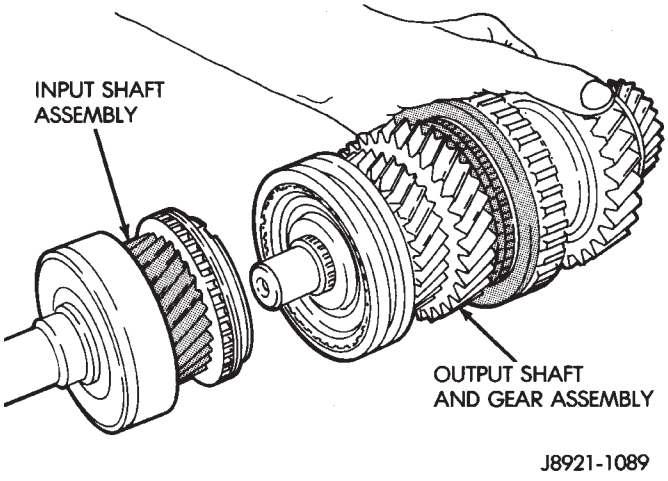

Fig. 59 Input Shaft Removal

(8) Remove output shaft pilot bearing from input shaft (Fig. 60).

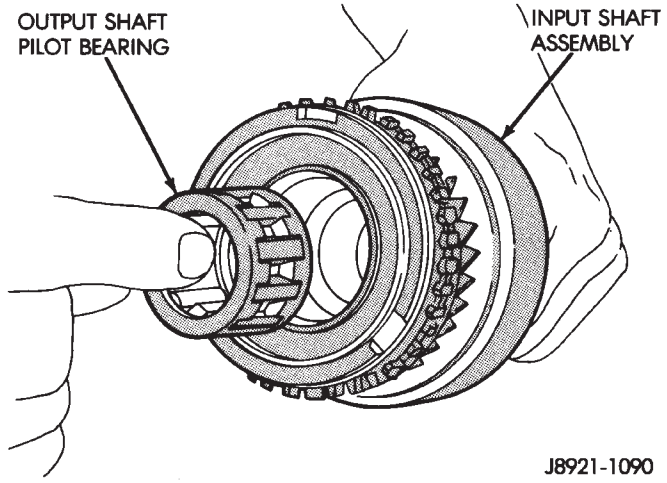

Fig. 60 Input Shaft Pilot Bearing Removal

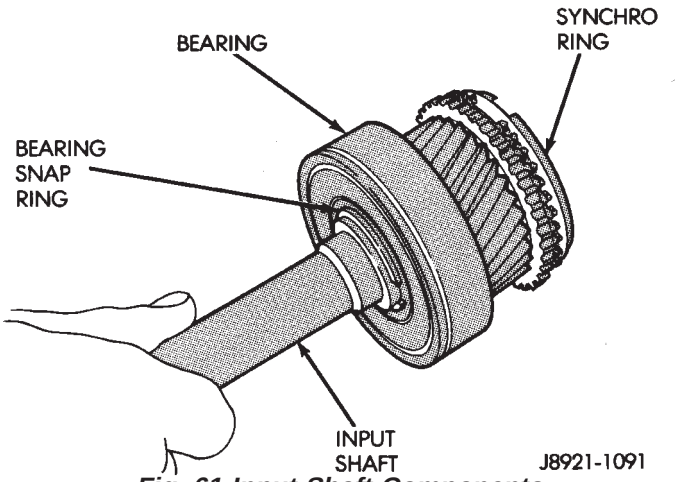

Fig. 61 Input Shaft Components

(9) Remove synchro ring from input shaft (Fig. 61).

(10) Remove bearing snap ring and press bearing off input shaft (Fig. 61).

OUTPUT SHAFT DISASSEMBLY

(1) Measure thrust clearance of output shaft first, second and third gears with feeler gauge (Fig. 62).

- First gear clearance should be 0.10—0.40 mm (0.003—0.0197 in).
- Second—third gear clearance should be 0.10—0.30 mm (0.003—0.0118 in.).

(2) If first gear thrust clearance is incorrect, replace gear and thrust washer. **If second or third gear clearance is incorrect, either gear and bearing, or output shaft flange is worn. Refer to output shaft inspection in Cleaning and Inspection section.**

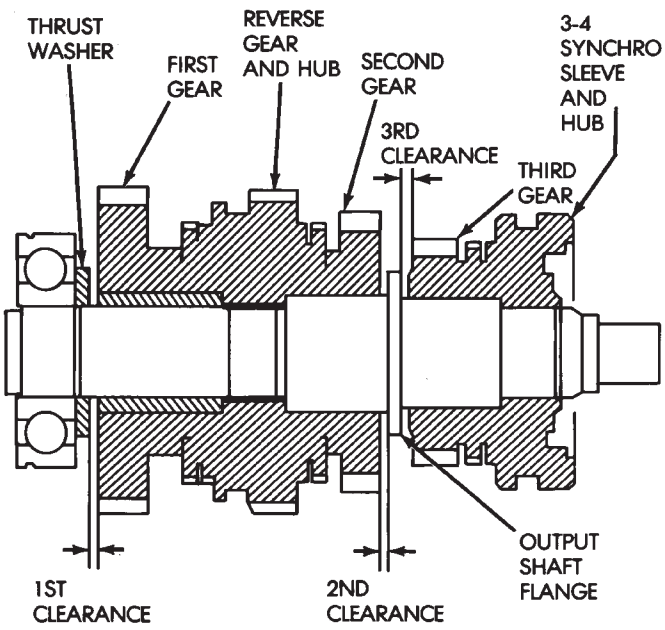

Fig. 62 Checking Output Shaft Gear Thrust Clearance

(3) Press fifth gear and rear bearing off rear of output shaft.

(4) Remove thrust washer, pin, and first gear and bearing (Fig. 62).

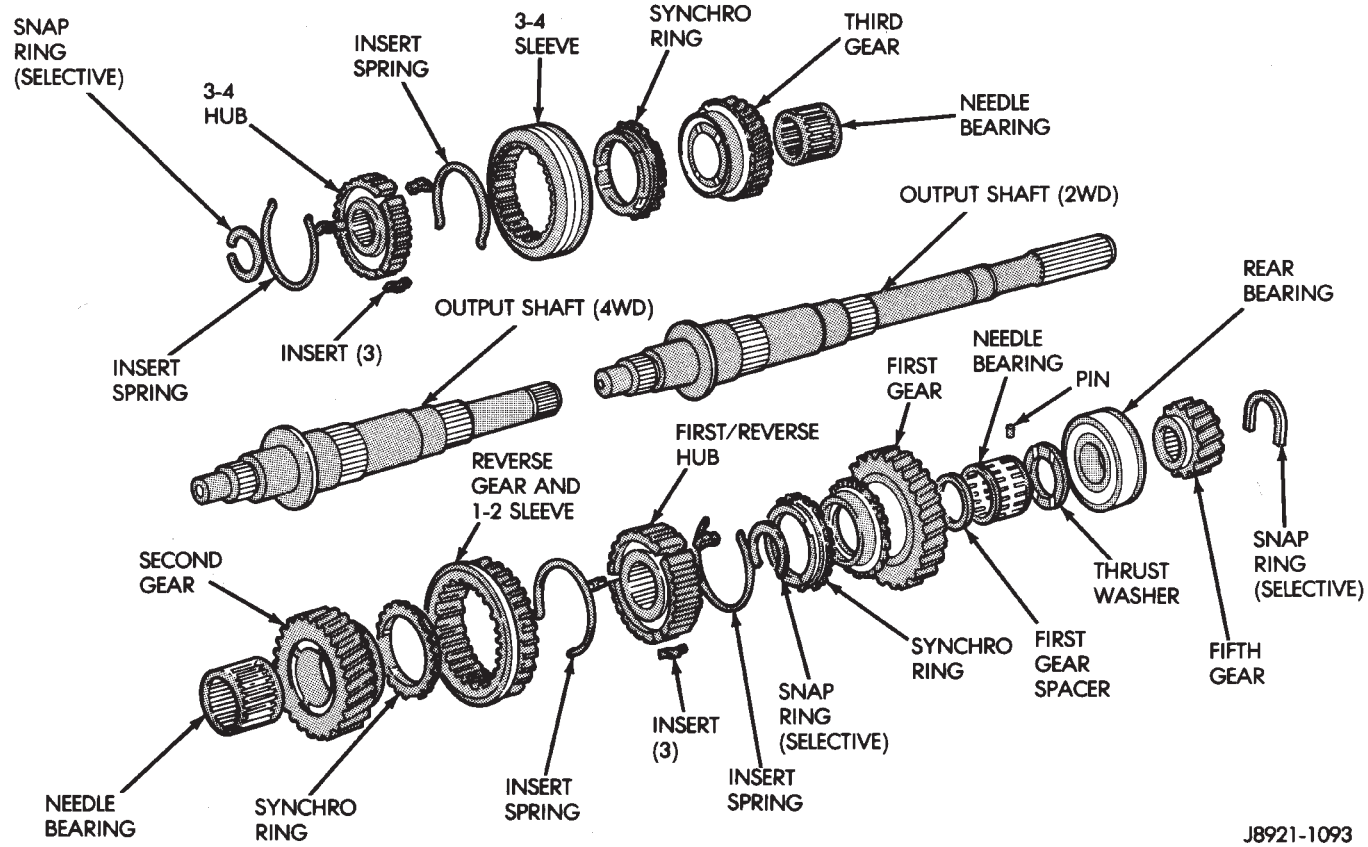

Fig. 63 Output Shaft And Gears

(5) Remove first/reverse hub snap ring (Fig. 63).
(6) Remove synchro ring.
(7) Press reverse gear and first/reverse hub off shaft as assembly.
(8) Remove remaining synchro ring and second gear and bearing (Fig. 63).
(9) Remove snap ring at front of output shaft (Fig. 63).
(10) Press 3-4 hub and sleeve off output shaft as assembly (Fig. 63).
(11) Remove synchro ring.
(12) Remove third gear and needle bearing (Fig. 63).

TRANSMISSION CLEANING AND INSPECTION

Clean the transmission components in solvent. Then dry the cases, gears, shift mechanism and shafts with compressed air. **Dry the bearings with clean, dry shop towels only. Never use compressed air on the bearings. This could damage the bearing rollers.**

Replace components that are obviously worn, cracked, chipped or damaged.

Inspect the transmission case. Replace the case if cracked or porous or if any of the bearing and gear bores are damaged.

Output Shaft Inspection

Measure thickness of the output shaft flange with a micrometer (Fig. 64). Minimum allowable flange thickness is 4.70 mm (0.185 in).

If shaft flange thickness is OK but previously measured second/third gear thrust clearance was incorrect (Fig. 62), replace the necessary gear and needle bearing as an assembly.

Check diameter of the first, second and third gear bearing surfaces of the output shaft (Fig. 64). Minimum allowable diameters are:

- 38.86 mm (1.529 in.) for first gear surface
- 46.86 mm (1.844 in.) for second gear surface
- 37.86 mm (1.490 in.) for third gear surface

Check output shaft runout with V-blocks and a dial indicator (Fig. 64). Maximum allowable runout is 0.06 mm (0.0024 in.).

Replace the output shaft if any surface measured fails to meet stated tolerance.

Cluster Gear Inspection

Inspect the cluster gear teeth. Replace the gear if any teeth are worn or damaged or if the bearing surfaces are damaged.

Check diameter of the cluster gear journal with a micrometer (Fig. 65). Minimum allowable diameter is 27.860 mm (1.096 in.).

Check condition of the cluster gear front bearing. Replace the bearing if worn, noisy, or damaged.

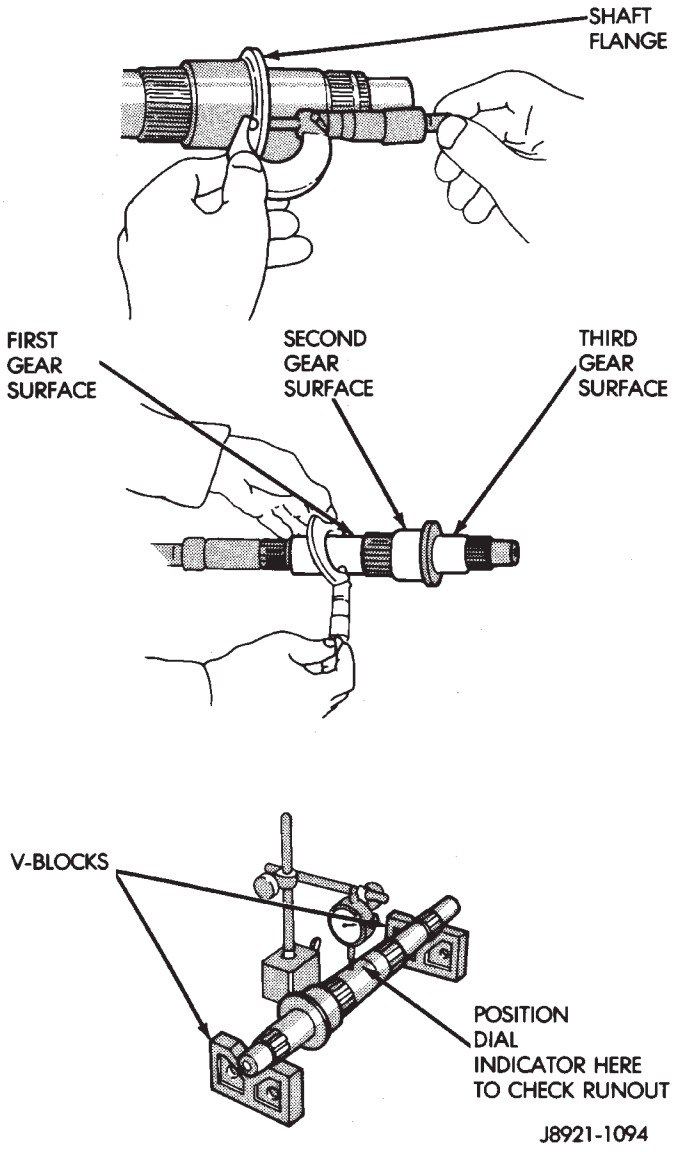

Fig. 64 Checking Output Shaft Tolerances

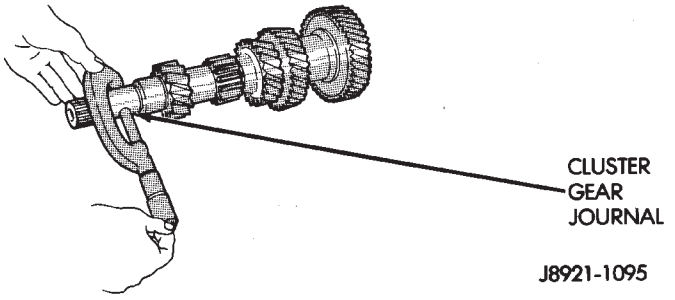

Fig. 65 Checking Cluster Gear Journal Diameter

GEAR AND SYNCHRO INSPECTION

Install the synchro rings on their respective gears. Rotate each ring on the gear and note synchro action. Replace any synchro ring that exhibits a lack of braking action or binds on the gear. Also replace any ring that is worn or has chipped or broken teeth.

Measure end clearance between the synchro ring and the gear with a feeler gauge (Fig. 66). Clearance should be 0.06 mm to 1.6 mm (0.024 to 0.063 in.).

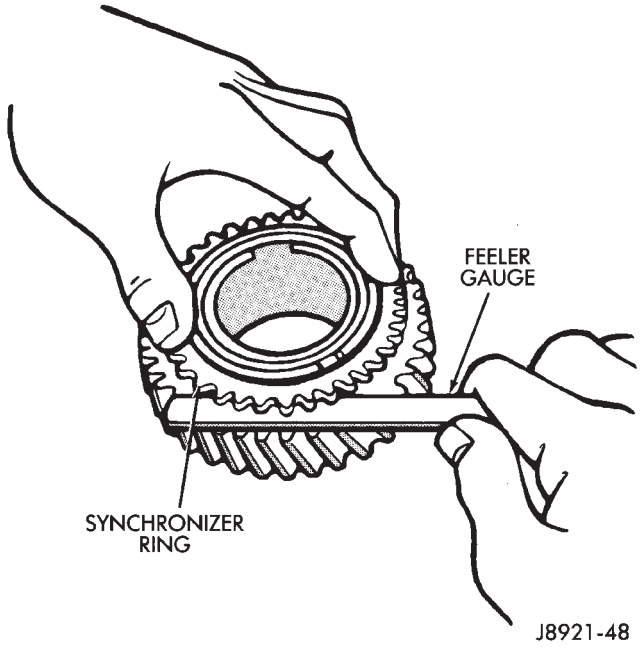

Fig. 66 Checking Synchro Ring End Clearance

Install the needle bearings in the first, second and third gears. Then install the gears on the output shaft and check shaft-to-gear clearance with a dial indicator (Fig. 67).

Maximum allowable clearance is 0.16 mm (0.0063 in.). If any gear exhibits excessive clearance, replace the gear and needle bearing.

Check clearance between the shift forks and synchro sleeves with a feeler gauge (Fig. 68). Clearance should not exceed 1.0 mm (0.039 in.). Replace the synchro sleeve (and matching hub) if clearance exceeds the stated limit.

Check condition of the reverse idler gear bushing (Fig. 69). Replace the gear if the bushing is scored or worn.

Gear Case, Housing And Intermediate Plate

Clean the case, housing and plate with solvent and dry with compressed air. Replace any component that is cracked, warped or damaged in any way.

Inspect the threads in the case, housing and plate. Minor thread damage can be repaired with steel thread inserts if necessary. However, do not attempt to repair if the cracks are evident around any threaded hole.

Inspect the reverse pin in the adapter/extension housing. Replace the pin if worn or damaged. Refer to the replacement procedure in the Transmission Assembly section.

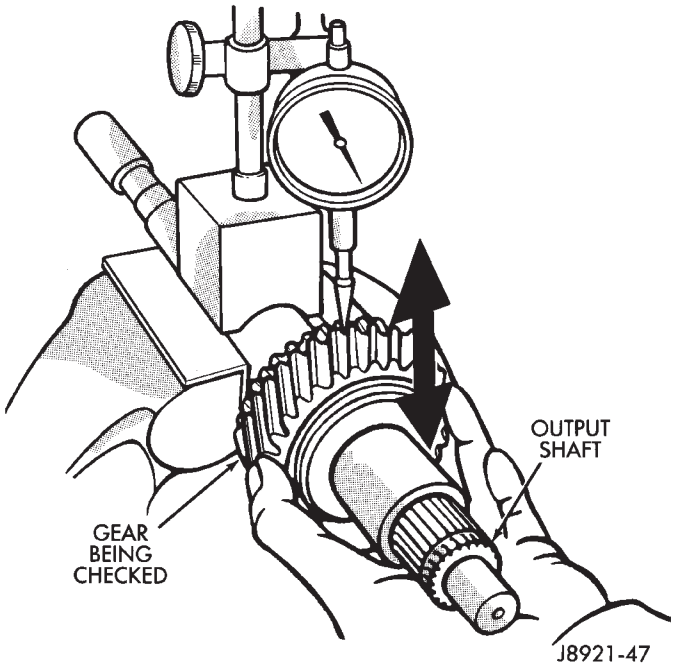

Fig. 67 Checking Gear-To-Shaft Clearance

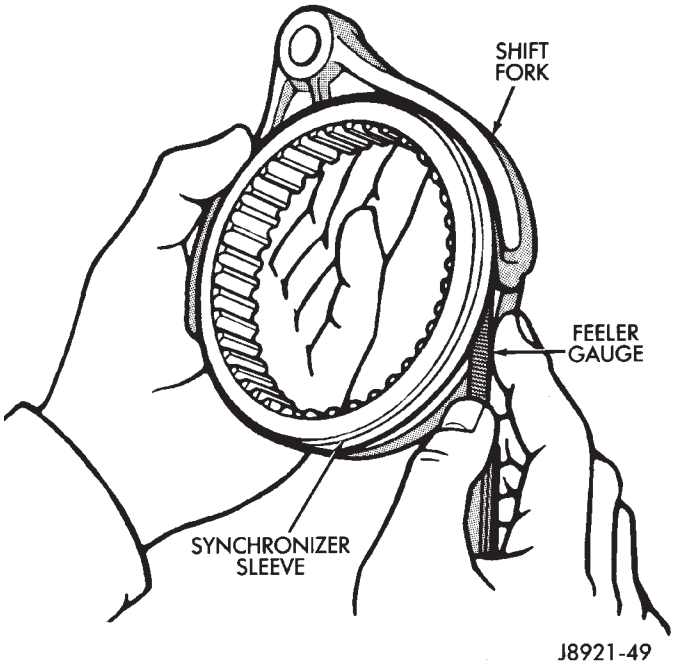

Fig. 68 Checking Shift Fork-To-Sleeve Clearance

TRANSMISSION ASSEMBLY AND ADJUSTMENT

Lubricate the transmission components with gear lubricant during assembly. Use petroleum jelly to lubricate seal lips and/or hold parts in place during installation.

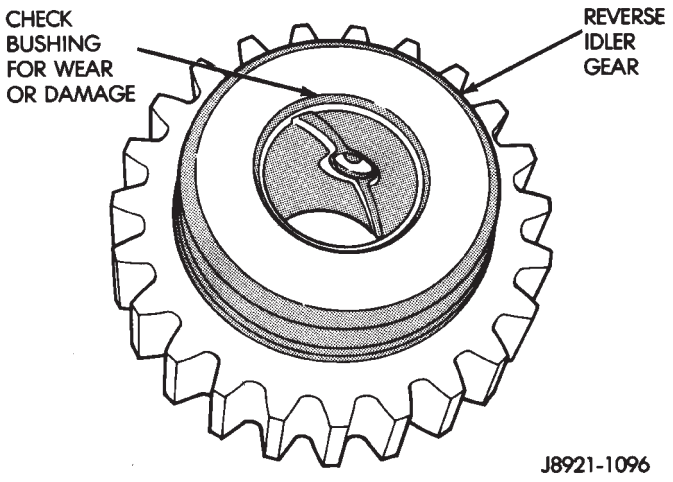

Fig. 69 Reverse Idler Gear Bushing

FRONT BEARING/BEARING SEAL/REVERSE SHAFT PIN INSTALLATION

(1) Press front bearing on input shaft. Then secure bearing with thickest snap ring that will fit in shaft groove (Fig. 70).

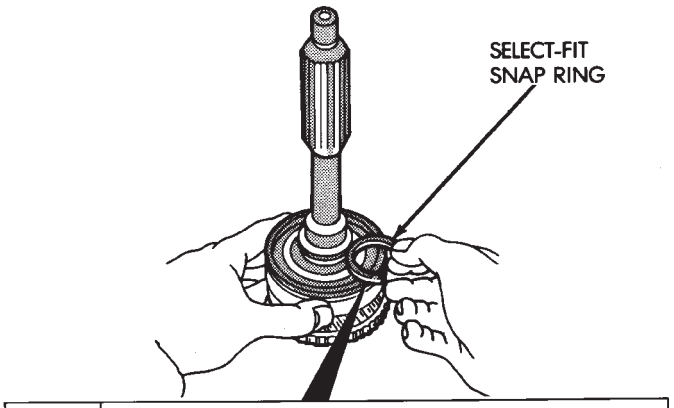

I.D. MARK	SNAP RING THICKNESS	MM (IN.)
A	2.10 - 2.15	(0.0827 - 0.0846)
B	2.15 - 2.20	(0.0846 - 0.0866)
C	2.20 - 2.25	(0.0866 - 0.0886)
D	2.25 - 2.30	(0.0886 - 0.0906)
E	2.30 - 2.35	(0.0906 - 0.0925)
F	2.35 - 2.40	(0.0925 - 0.0945)
G	2.40 - 2.45	(0.0945 - 0.0965)

J8921-1097

Fig. 70 Selecting Input Shaft Front Bearing Snap Ring

(2) Press front bearing on cluster gear. Then secure bearing with thickest snap ring that will fit in ring groove on gear (Fig. 71).

(3) Install new oil seals in front bearing retainer and adapter housing (Fig. 72). Installation depth for bearing retainer seal is 10.5 to 11.5 mm (0.414 to 0.453 in.).

(4) Install reverse shaft and shaft retaining pin in adapter housing. Then install access hole plug with torx bit (Fig. 73).

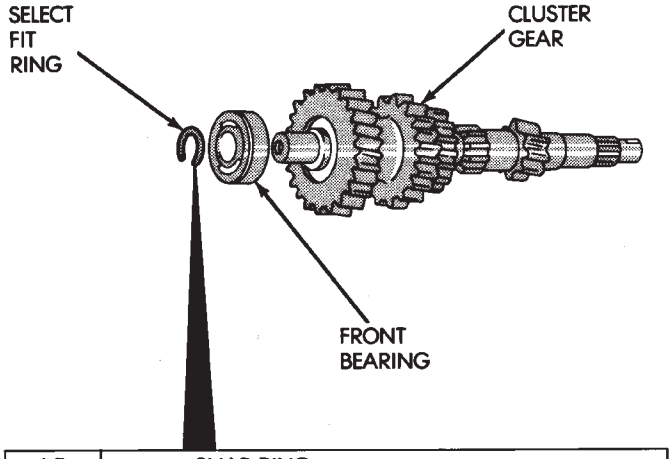

I.D. MARK	SNAP RING THICKNESS	MM (IN.)
A	2.00 - 2.05	(0.0787 - 0.0807)
B	2.05 - 2.10	(0.0807 - 0.0827)
C	2.10 - 2.15	(0.0827 - 0.0846)
D	2.15 - 2.20	(0.0846 - 0.0866)
E	2.20 - 2.25	(0.0866 - 0.0886)

J8921-1098

Fig. 71 Selecting Cluster Gear Front Bearing Snap Ring

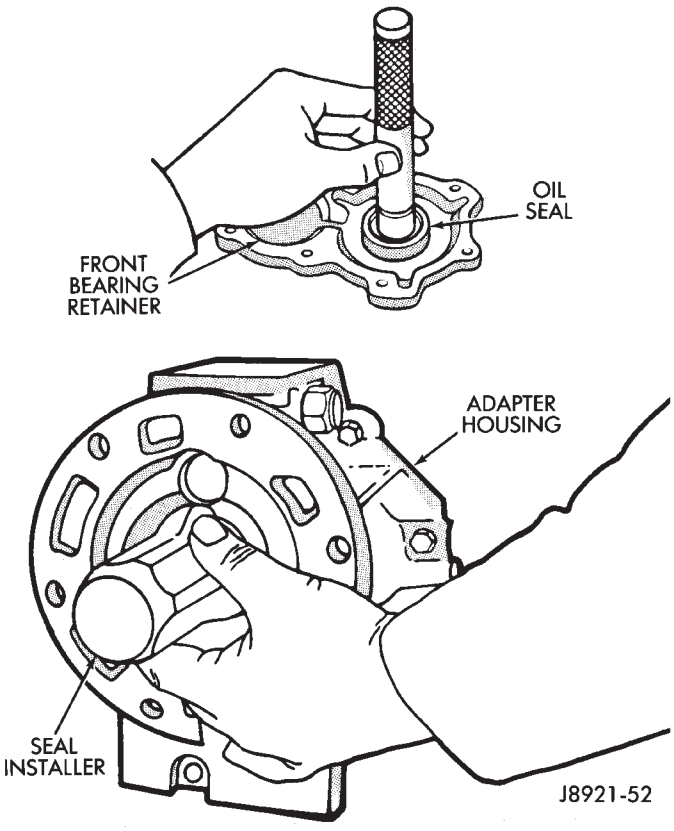

Fig. 72 Oil Seal Installation

(5) Lubricate reverse shaft and gear components with Mopar 75W-90 gear lubricant.

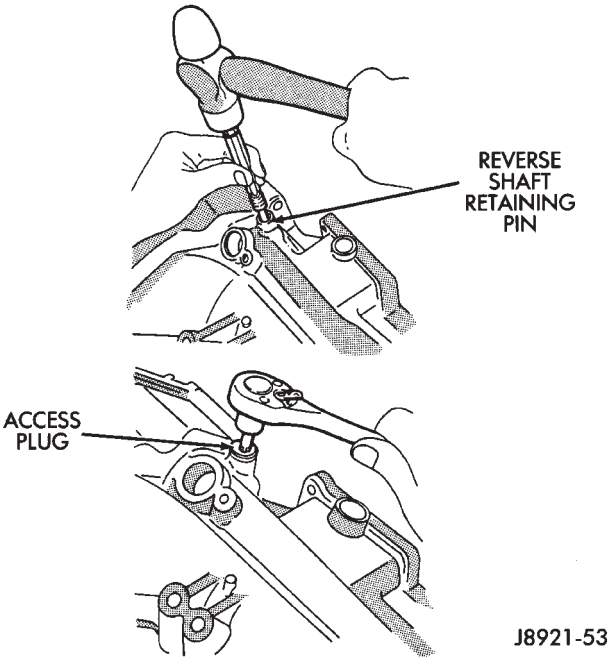

Fig. 73 Installing Reverse Shaft Pin

OUTPUT SHAFT ASSEMBLY

(1) Lubricate output shaft journals, gears and needle bearings with recommended gear lubricant.

(2) Install third gear and needle bearing on shaft (Fig. 63)

(3) Install synchro ring on third gear (Fig. 63).

(4) Assemble 1-2 and 3-4 synchro hubs and sleeves (Fig.74).

(5) Install inserts and springs in synchro sleeves. Position open ends of springs 180° apart as shown (Fig. 75).

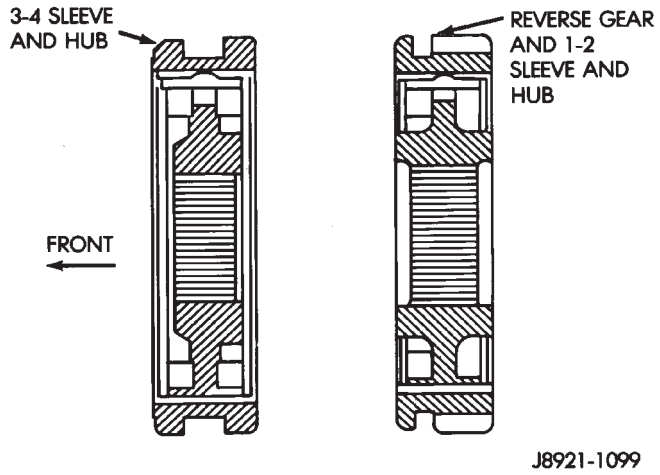

Fig. 74 Synchro Sleeve And Hub Identification

(6) Install 3-4 synchro hub and sleeve on output shaft. Press hub onto shaft if necessary.

(7) Install 3-4 synchro hub snap ring (Fig. 76). Use thickest snap ring that will fit in shaft groove.

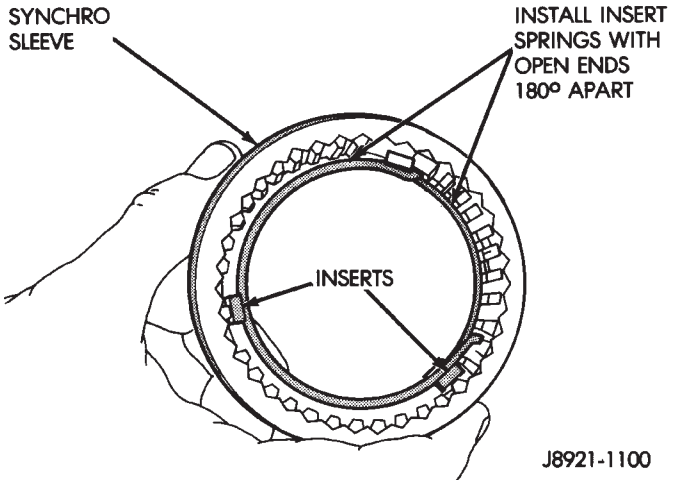

Fig. 75 Insert Spring Position

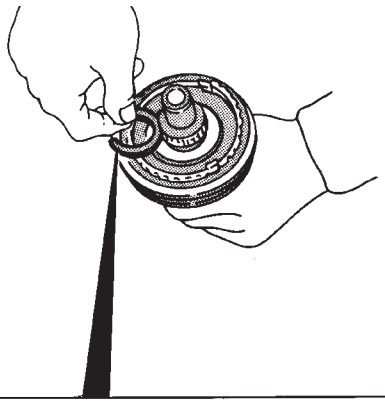

I.D. MARK	SNAP RING THICKNESS	MM (IN.)
A	1.80 - 1.85	(0.0709 - 0.0728)
B	1.85 - 1.90	(0.0728 - 0.0748)
C	1.90 - 1.95	(0.0748 - 0.0768)
D	1.95 - 2.00	(0.0768 - 0.0787)
E	2.00 - 2.05	(0.0787 - 0.0807)
F	2.05 - 2.10	(0.0807 - 0.0827)
G	2.10 - 2.15	(0.0827 - 0.0846)

J8921-1101

Fig. 76 Installing 3-4 Synchro Hub Snap Ring

(8) Verify third gear thrust clearance with feeler gauge (Fig. 56). Clearance should be 0.10 to 0.25 mm (0.004 to 0.010 in.).

(9) Lubricate remaining output shaft gears and bearings with gear lubricant.

(10) Install second gear and needle bearing on shaft (Fig. 78).

(11) Install synchro ring on second gear (Fig. 78).

(12) Assemble first/reverse hub, insert springs, inserts, reverse gear and 1-2 sleeve (Fig. 78). **Be sure spring ends are 180° apart. Note that splines in hub bore are chamfered on one side. Install hub so chamfered side faces front of output shaft.**

(13) Press assembled hub and sleeve on output shaft.

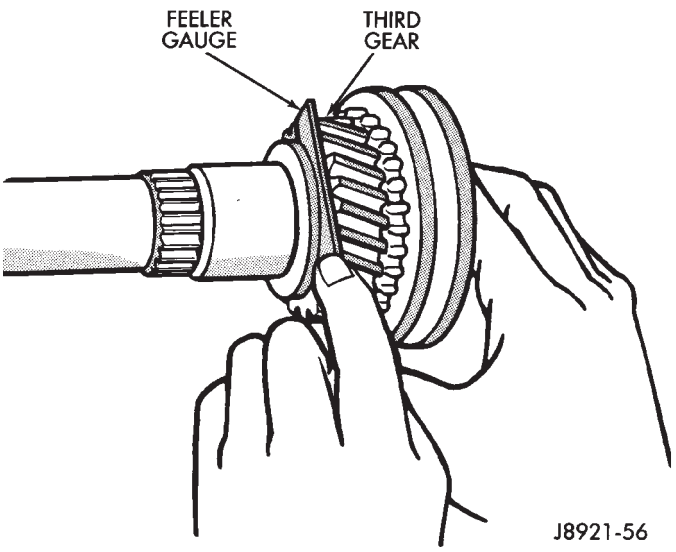

Fig. 77 Checking Third Gear Clearance

(14) Install selective snap ring (Fig. 78). Use thickest snap ring that will fit in output shaft groove.

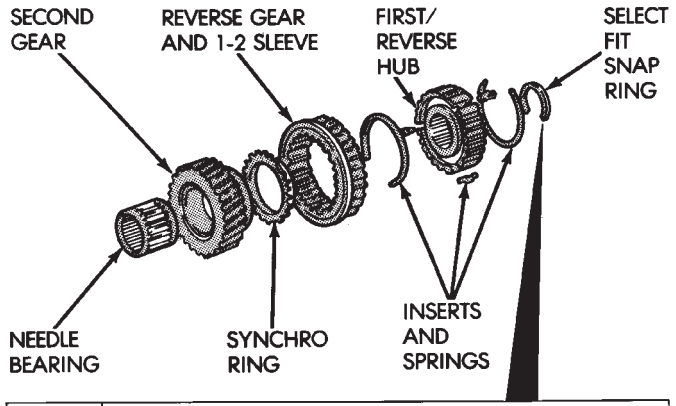

I.D. MARK	SNAP RING THICKNESS	MM (IN.)
B	2.35 - 2.40	(0.0925 - 0.0945)
C	2.40 - 2.45	(0.0945 - 0.0965)
D	2.45 - 2.50	(0.0965 - 0.0984)
E	2.50 - 2.55	(0.0984 - 0.1004)
F	2.55 - 2.60	(0.1004 - 0.1024)
G	2.60 - 2.65	(0.1024 - 0.1043)

J8921-1102

Fig. 78 Second Gear And Synchro Assembly

(15) Install synchro ring on first gear (Fig. 79).

(16) Install first gear spacer on shaft and against selective fit snap ring (Fig. 79).

(17) Install first gear and needle bearing (Fig. 79) on output shaft.

(18) Install locating pin and thrust washer on shaft (Fig. 79).

(19) Press rear bearing on shaft. Position bearing snap ring groove so it is closest to end of output shaft.

(20) Check first and second gear thrust clearance with feeler gauge (Fig. 62).

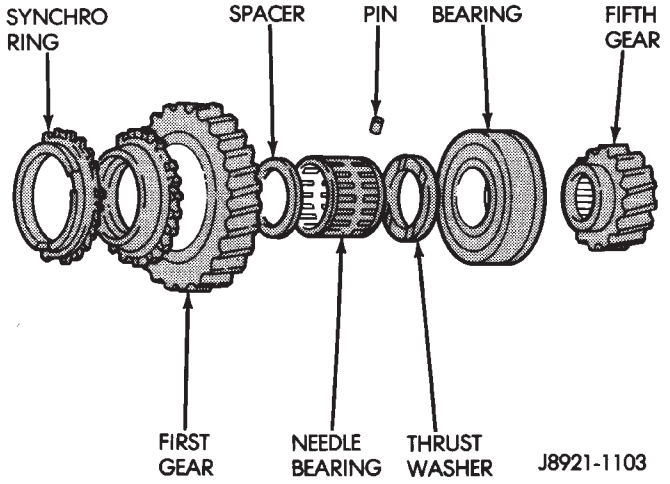

Fig. 79 First And Fifth Gear Components

- First gear clearance should be 0.10 to 0.40 mm (0.003 to 0.0197 in.)
- Second gear clearance should be 0.10 to 0.30 mm (0.003 to 0.0118 in.)

(21) Press fifth gear onto output shaft. Then install select fit snap ring (Fig. 80). Use thickest snap ring that will fit in shaft groove.

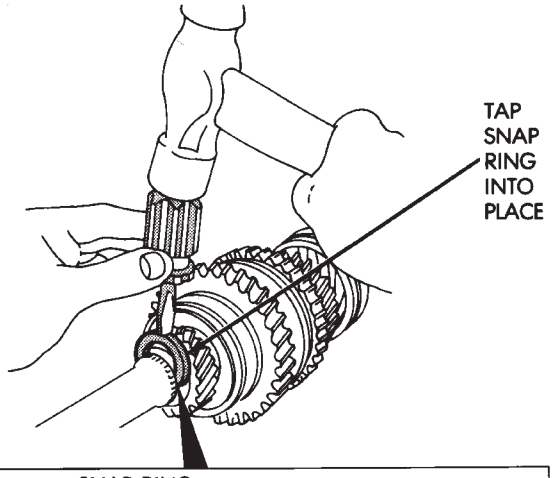

I.D. MARK	SNAP RING THICKNESS	MM (IN.)
A	2.75 - 2.80	(0.1083 - 0.1102)
B	2.80 - 2.85	(0.1002 - 0.1122)
C	2.85 - 2.90	(0.1122 - 0.1142)
D	2.90 - 2.95	(0.1142 - 0.1161)
E	2.95 - 3.00	(0.1161 - 0.1181)
F	3.00 - 3.05	(0.1181 - 0.1201)
G	3.05 - 3.10	(0.1201 - 0.1220)
H	3.10 - 3.15	(0.1220 - 0.1240)
J	3.15 - 3.20	(0.1240 - 0.1260)
K	3.20 - 3.25	(0.1260 - 0.1280)
L	3.25 - 3.30	(0.1280 - 0.1299)
M	3.30 - 3.35	(0.1299 - 0.1319)

J8921-1104

Fig. 80 Selecting Fifth Gear Snap Ring

(22) Lubricate input shaft pilot bearing with petroleum jelly and install bearing in shaft (Fig. 60).

(23) Install input shaft on output shaft (Fig. 59). Be sure output shaft hub is fully seated in pilot bearing.

OUTPUT SHAFT AND CLUSTER GEAR INSTALLATION

(1) Mount intermediate plate in vise (Fig. 24).

(2) Lubricate cluster gear journal and rear bearing with petroleum jelly or gear lubricant.

(3) Install cluster gear rear bearing in intermediate plate (Fig. 81). Be sure snap ring groove in bearing is rearward as shown.

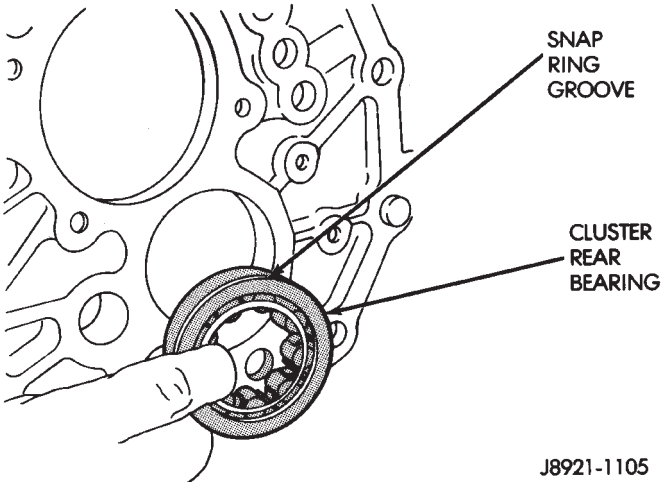

Fig. 81 Installing Cluster Gear Rear Bearing

(4) Start cluster gear into bearing (Fig. 57). Then hold bearing and push gear into place. Use plastic or rawhide mallet to seat bearing if necessary.

(5) Start output shaft rear bearing in intermediate plate. Push shaft rearward and tap intermediate plate with mallet to seat bearing.

(6) Install snap rings on cluster and output shaft **rear** bearings only (Fig. 82). Do not install front bearing snap rings at this time.

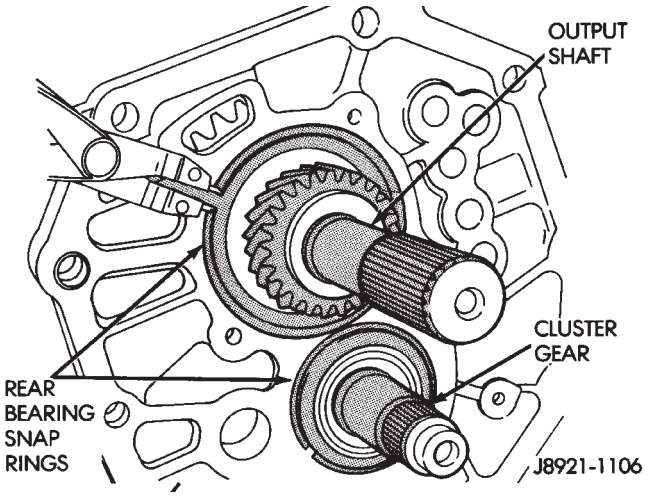

Fig. 82 Installing Rear Bearing Snap Rings

(7) Install reverse idler gear and shaft (Fig. 83).

(8) Position rear bearing retainer over output shaft and rear bearing. **Be sure bearing retainer tab is engaged in reverse idler shaft notch (Fig. 84).**

(9) Install and tighten rear bearing retainer bolts to 18 N·m (13 ft-lbs).

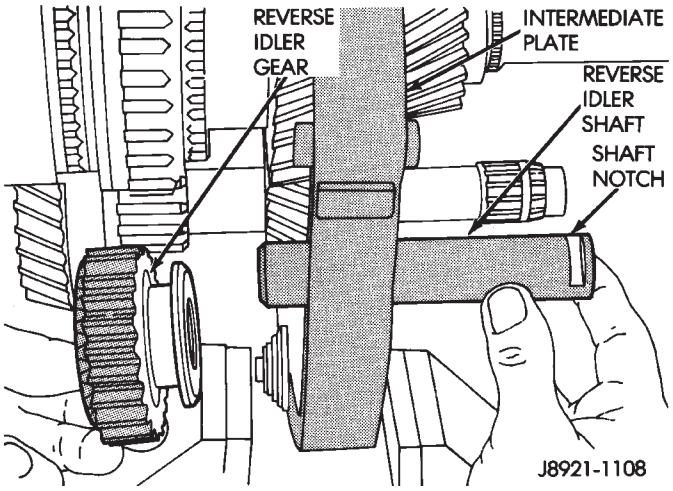

Fig. 83 Installing Reverse Idler Gear And Shaft

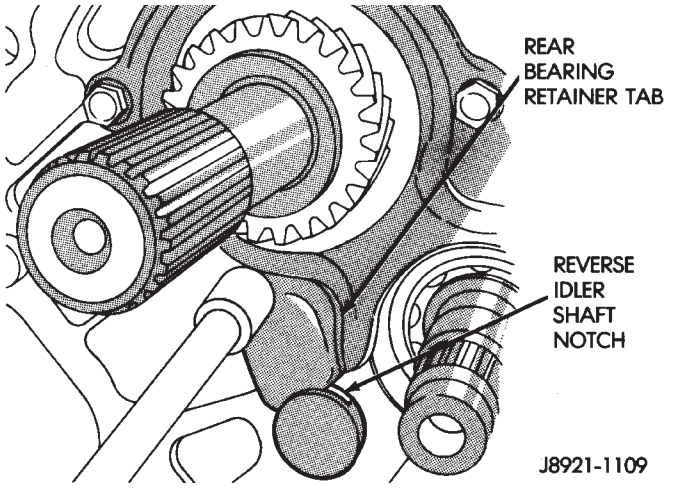

Fig. 84 Installing Rear Bearing Retainer

SHIFT RAIL AND FORK INSTALLATION

The shift rail interlock pins, balls and plugs must be installed in the correct sequence for proper shifting. Refer to the installation diagram (Fig. 85) during assembly.

Coat the intermediate plate shift rail bores and the interlock balls, pins and plugs with a thick covering of petroleum jelly before assembly. The jelly will hold the interlock components in place making installation easier. Use a pencil magnet to hold and insert the interlocks. Then use a small screwdriver to push the interlock components into place.

(1) Coat reverse rail interlock pin with petroleum jelly and install pin in rail (Fig. 86).

(2) Install reverse shift rail in intermediate plate (Fig. 87).

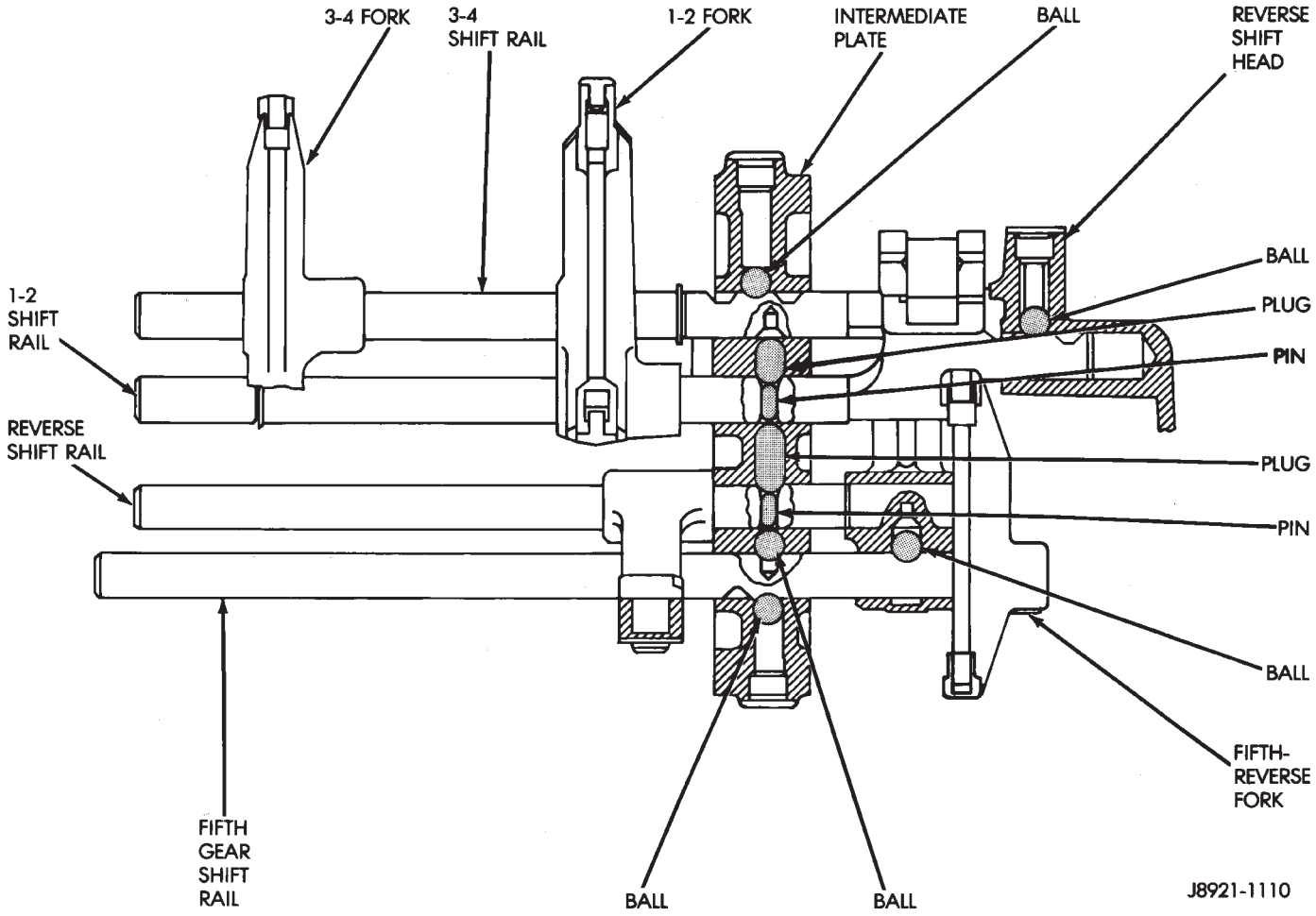

Fig. 85 Shift Rail Ball-Plug-Pin Position

(3) Install reverse shift rail C-ring (Fig. 51).

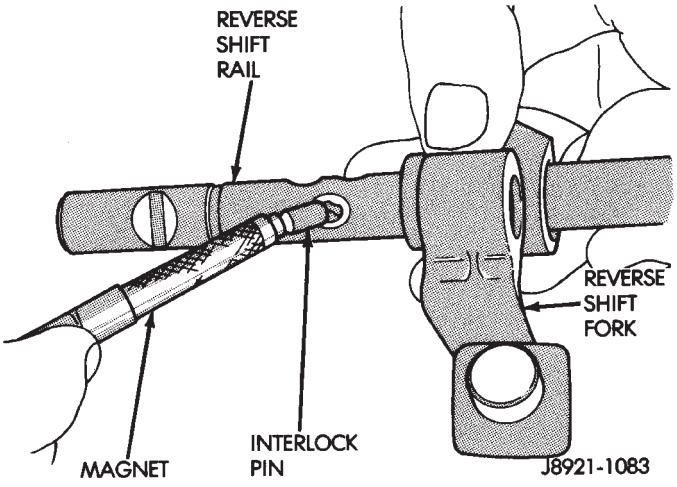

Fig. 86 Installing Reverse Shift Rail Interlock Pin

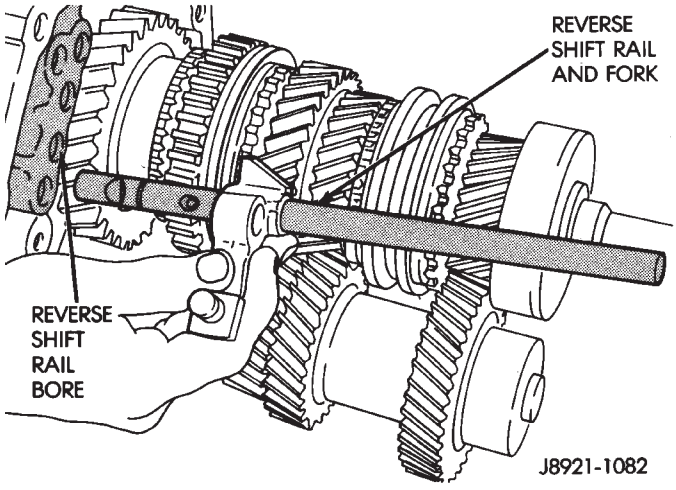

Fig. 87 Installing Reverse Shift Rail And Fork

(4) Position 1-2 and 3-4 shift forks in synchro sleeves (Fig. 88).

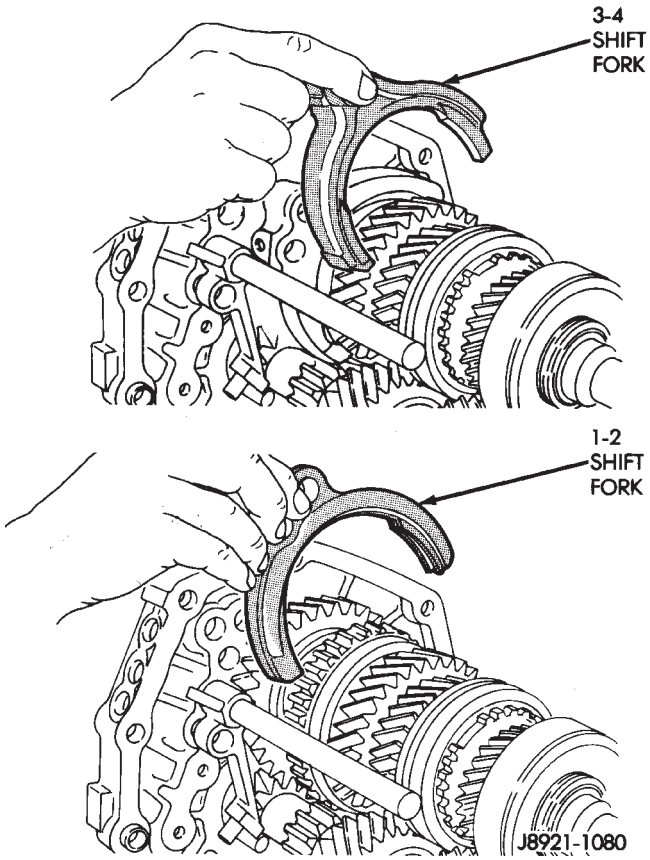

Fig. 88 Shift Fork Installation

(5) Coat reverse rail lock ball with petroleum jelly. Then tilt reverse shift fork upward and insert ball in intermediate plate (Fig. 89).

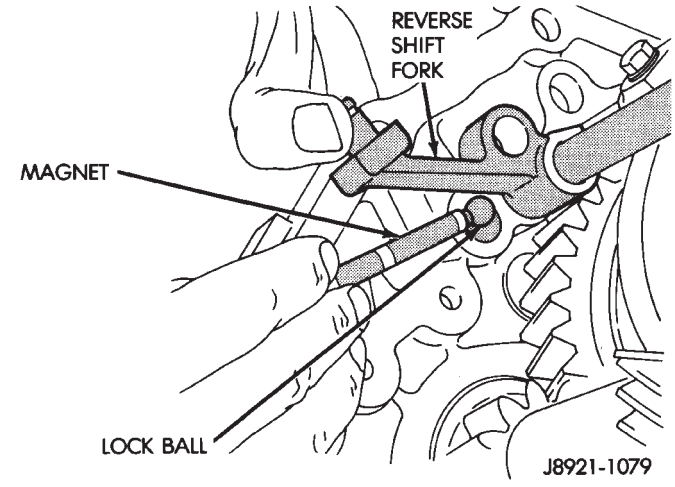

Fig. 89 Installing Reverse Shift Rail Lock Ball

(6) Coat 1-2 shift rail interlock plug with petroleum jelly and install it in intermediate plate bore (Fig. 90).

(7) Coat 1-2 shift rail interlock pin with petroleum jelly and insert it in shift rail (Fig. 91).

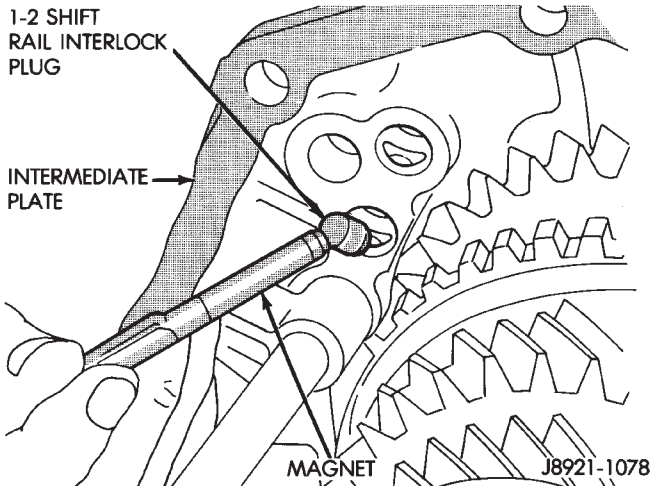

Fig. 90 Installing 1-2 Shift Rail Interlock Plug

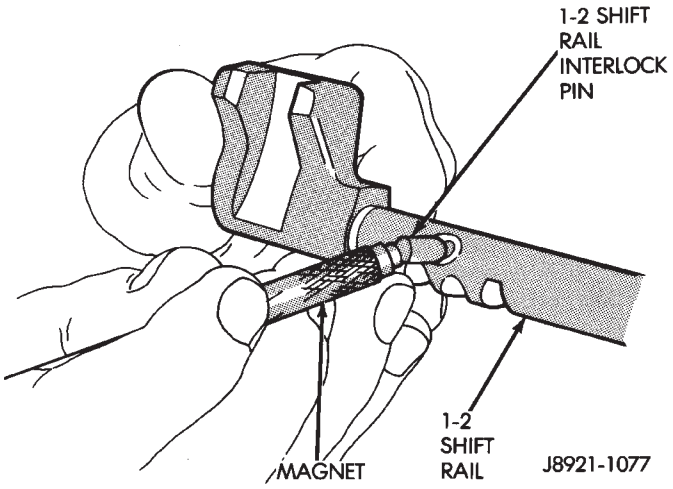

Fig. 91 Installing 1-2 Shift Rail Interlock Pin

(8) Install 1-2 shift rail in intermediate plate and 1-2 fork (Fig. 92).

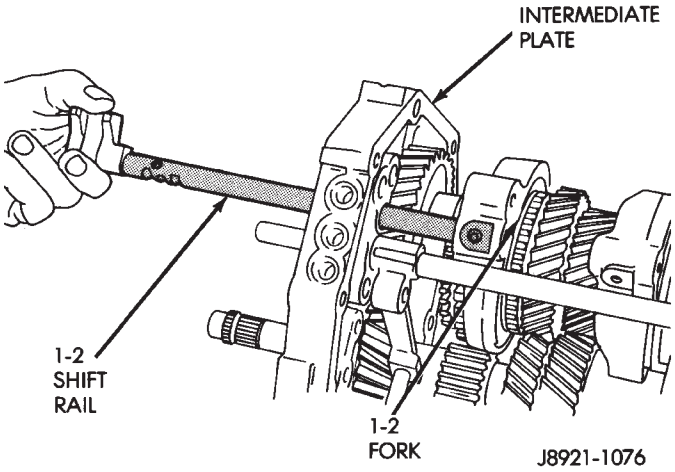

Fig. 92 Installing 1-2 Shift Rail

(9) Coat 3-4 shift rail interlock plug with petroleum jelly and install plug in intermediate plate (Fig. 93).

(10) Install 3-4 shift rail in intermediate plate and in both shift forks (Fig. 94).

(11) Verify that none of the interlock balls, plugs, or pins were displaced during shift rail installation.

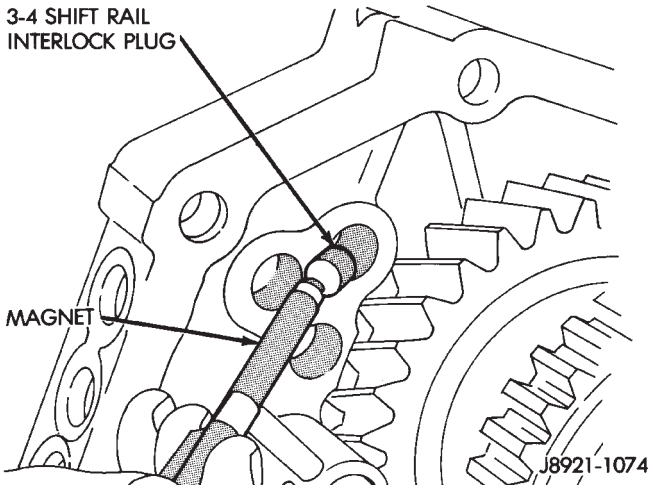

Fig. 93 Installing 3-4 Shift Rail Interlock Plug

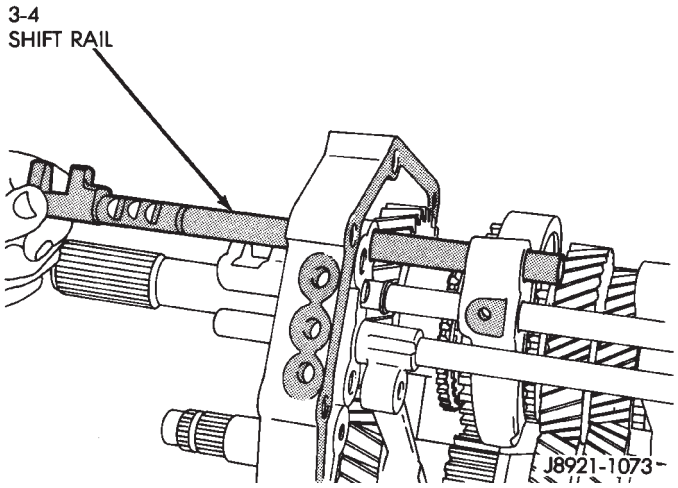

Fig. 94 Installing 3-4 Shift Rail

(12) Install and tighten shift fork setscrews to 20 N·m (14 ft. lbs.) torque (Fig. 95).

(13) Install 1-2 and 3-4 shift rail C-rings (Fig. 96).

(14) Insert fifth gear shift rail through reverse shift fork. **Then slide rail into intermediate plate just far enough to secure interlock ball. Do not fully install shift rail at this time.**

FIFTH-REVERSE GEAR AND SHIFT COMPONENT INSTALLATION

(1) Install thrust ring lock ball in cluster gear journal (Fig. 97). Use petroleum jelly to hold ball in place.

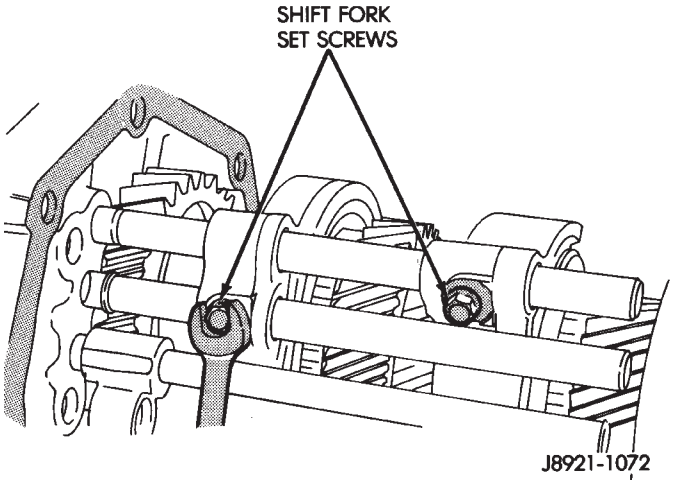

Fig. 95 Installing Shift Fork Set Screws

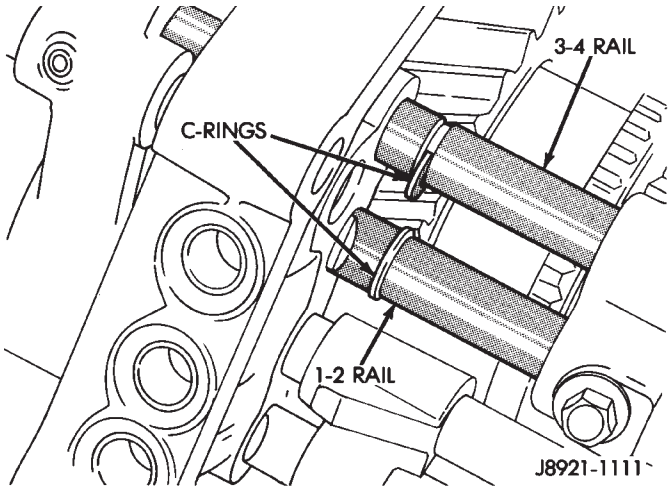

Fig. 96 Installing Shift Rail C-Rings

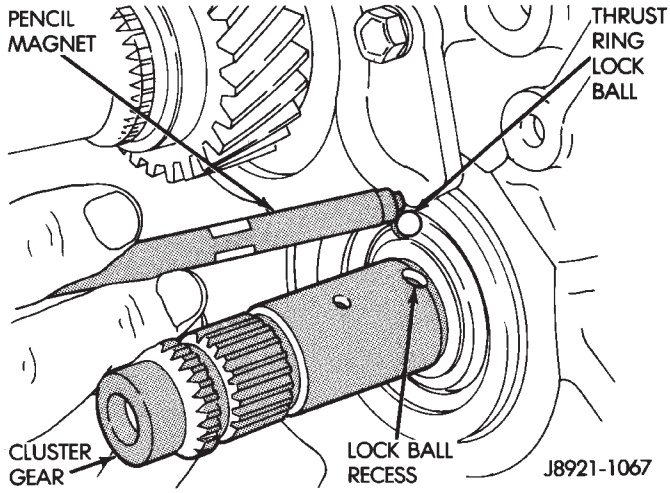

Fig. 97 Installing Thrust Ring Lock Ball

(2) Install fifth gear thrust ring (Fig. 98). Be sure thrust ring notch fits over lock ball.

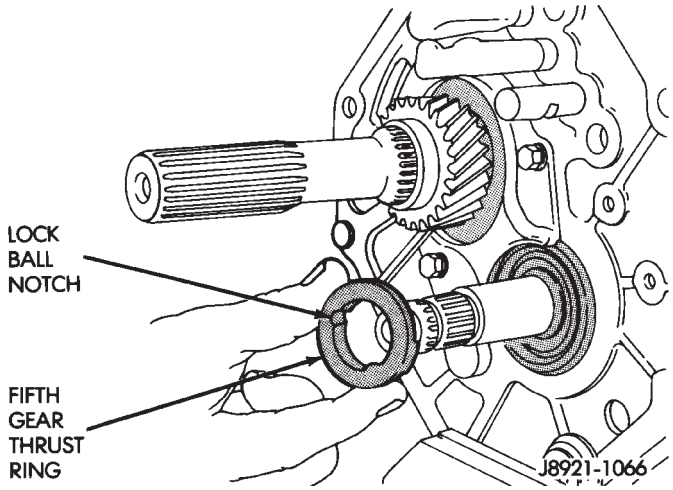

Fig. 98 Installing Fifth Gear Thrust Ring

(3) Assemble counter fifth gear, synchro sleeve, inserts and insert springs (Fig. 99).

(4) Lubricate two-piece bearing with petroleum jelly and install it in counter fifth gear (Fig. 100).

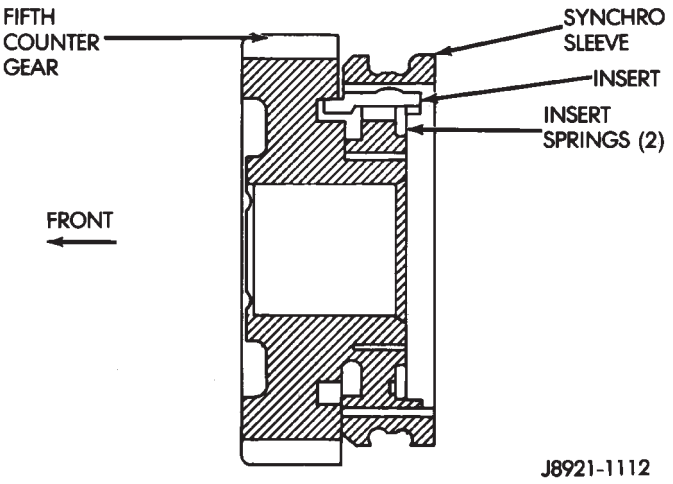

Fig. 99 Assembling Fifth Gear And Synchro Assembly

(5) Install counter fifth gear and synchro assembly on cluster gear journal (Fig. 101).

(6) Install synchro ring in synchro sleeve (Fig. 102).

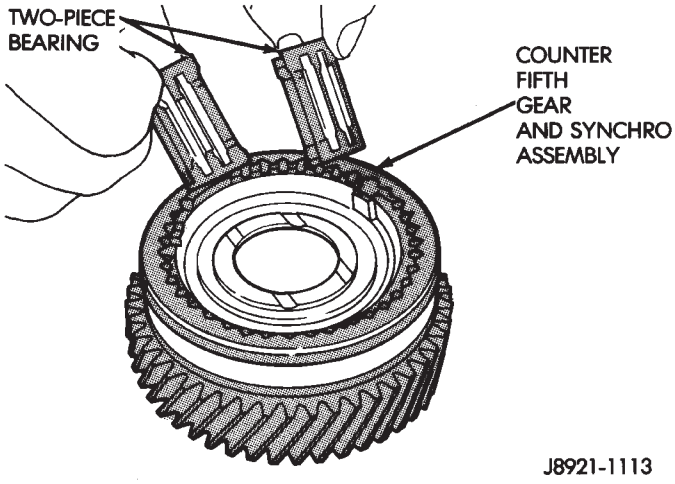

Fig. 100 Installing Counter Fifth Gear Bearing

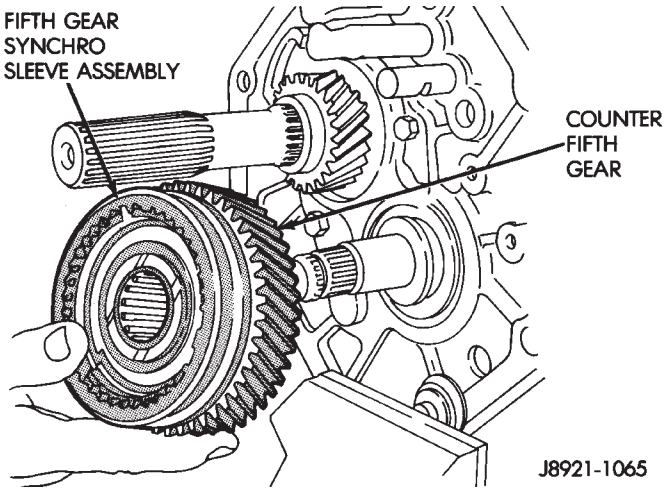

Fig. 101 Installing Counter Fifth Gear And Sleeve

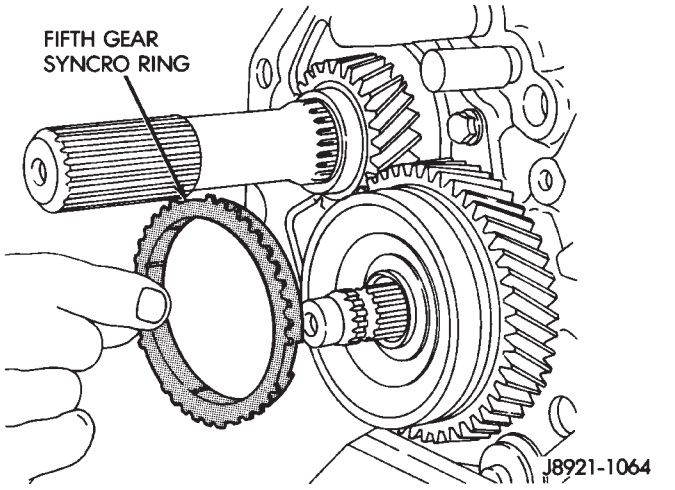

Fig. 102 Installing Fifth Gear Synchro Ring

(7) Install fifth spline gear on cluster journal (Fig. 103). Tap spline gear into place with plastic mallet if necessary.

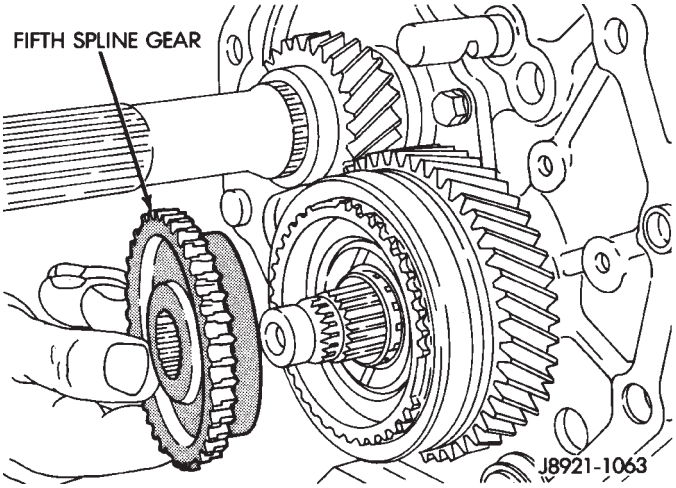

Fig. 103 Installing Fifth Spline Gear

(8) Install fifth gear selective snap ring (Fig. 104). Use thickest snap ring that will fit in shaft groove.

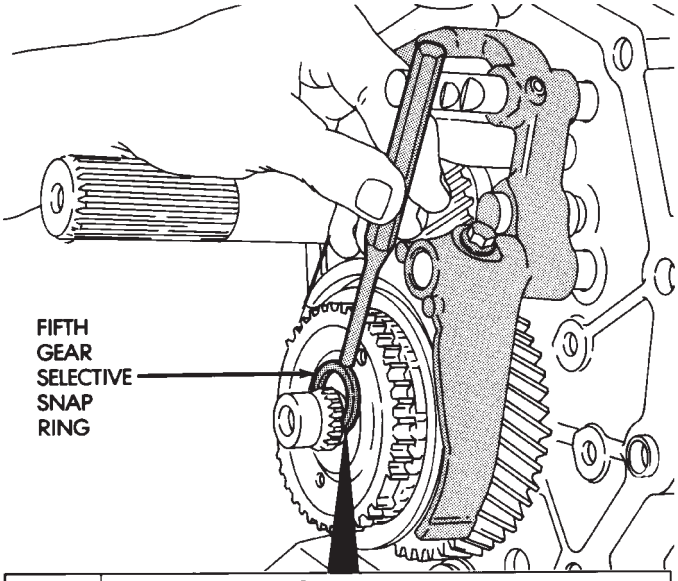

I.D. MARK	SNAP RING THICKNESS	MM (IN.)
A	2.85 - 2.90	(0.1122 - 0.1142)
B	2.90 - 2.95	(0.1142 - 0.1161)
C	2.95 - 3.00	(0.1161 - 0.1181)
D	3.00 - 3.05	(0.1181 - 0.1201)
E	3.05 - 3.10	(0.1201 - 0.1220)
F	3.10 - 3.15	(0.1220 - 0.1240)
G	3.15 - 3.20	(0.1240 - 0.1260)
H	3.20 - 3.25	(0.1260 - 0.1280)

J8921-1114

Fig. 104 Installing Fifth Gear Snap Ring

(9) Install reverse shift head and rail (Fig. 105). Then install lock ball in shift head.

(10) Position fifth gear shift fork in synchro sleeve (Fig. 106).

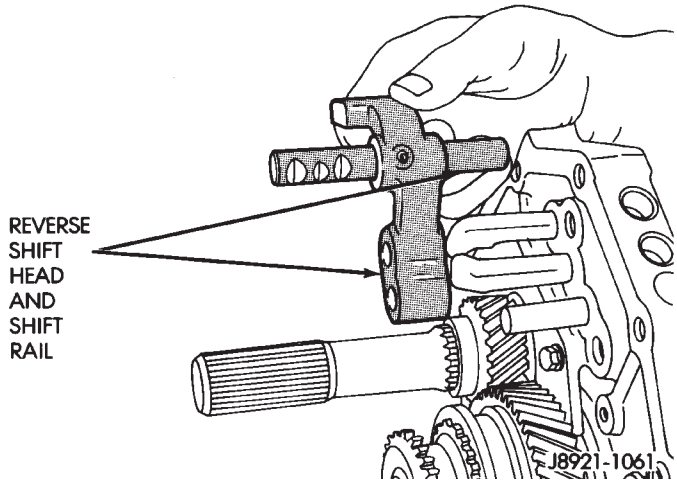

Fig. 105 Installing Reverse Shift Head And Rail

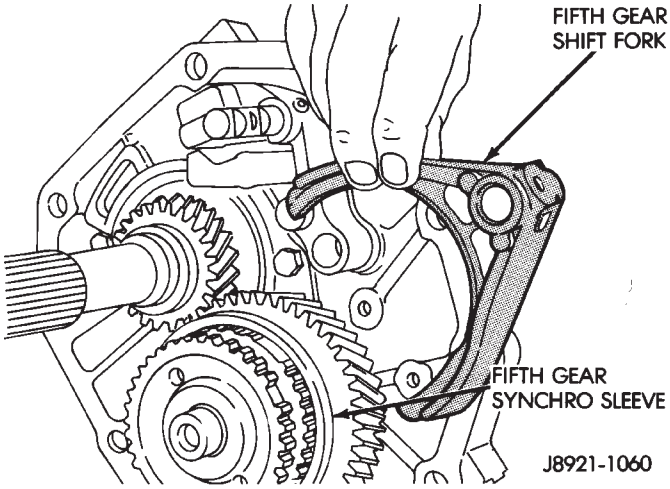

Fig. 106 Fifth Gear Shift Fork Installation

(11) Install fifth gear shift rail (Fig. 107). Slide rail through fork, shift head, intermediate plate and reverse shift fork. Be sure interlock ball is not displaced during installation.

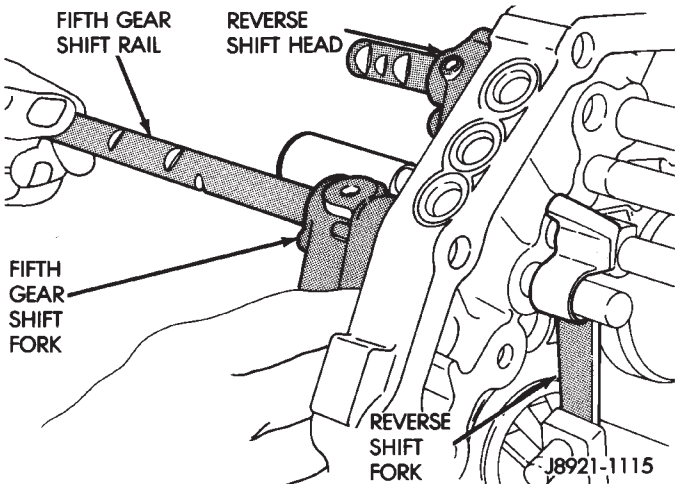

Fig. 107 Fifth Gear Shift Rail Installation

(12) Align screw holes in shift fork and rail and install set screw (Fig. 108). Tighten screw to 20 N·m (15 ft. lbs.) torque.

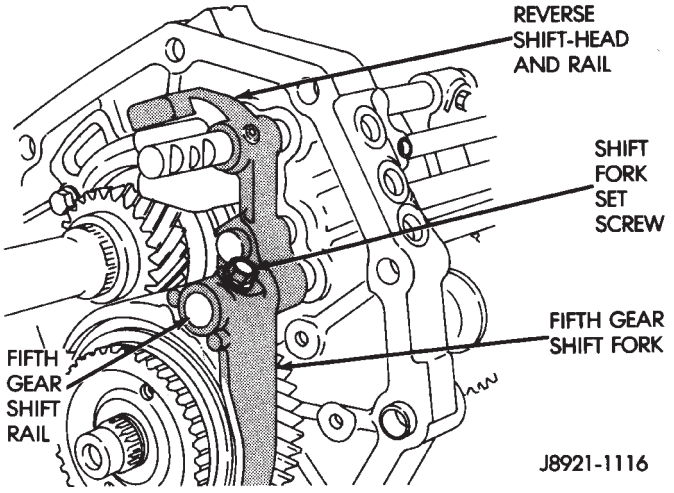

Fig. 108 Shift Fork Set Screw Installation

(13) Install lock balls and springs in intermediate plate (Fig. 109). Then install and tighten lock ball plugs to 19 N·m (14 ft. lbs.) torque.

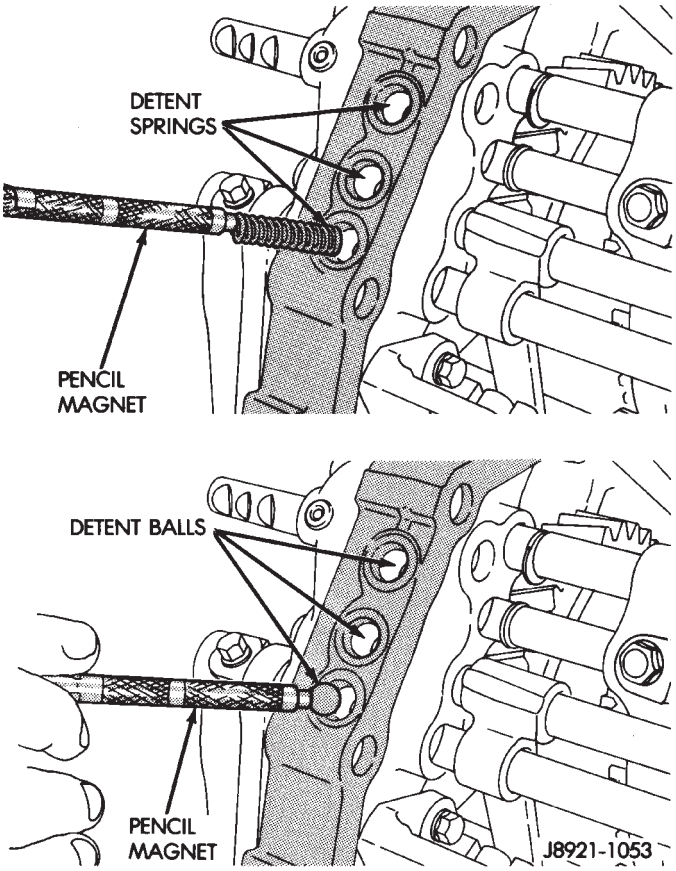

Fig. 109 Detent Ball And Spring Installation

(14) Install reverse shift arm bracket (Fig. 110). Tighten bracket bolts to 18 N·m (13 ft. lbs.) torque.

(15) Install reverse shift arm (Fig. 110). Position arm on reverse fork pin and engage it with pin on shift arm bracket.

(16) Verify that shift arm shoe is engaged in reverse idler gear. Then secure shift arm to pin on reverse fork with new E-clip.

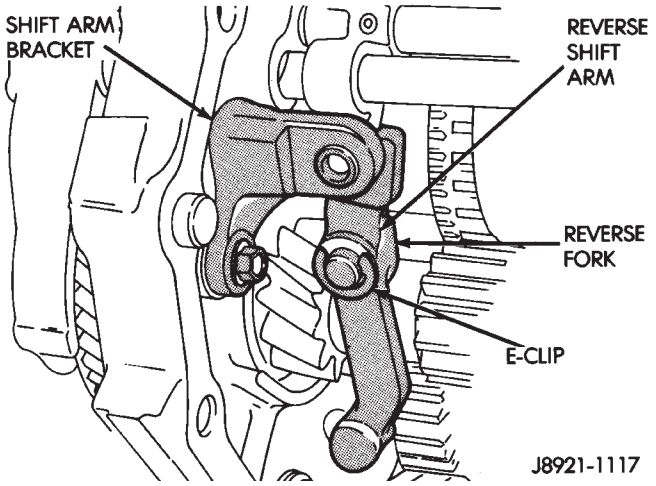

Fig. 110 Reverse Shift Arm And Bracket Installation

GEAR CASE AND ADAPTER INSTALLATION

(1) Dismount intermediate plate and gear assemblies from vise.

(2) Clean mating surfaces of intermediate plate and transmission gear case with wax and grease remover. Then wipe dry with a clean cloth.

(3) Apply 3 mm (1/8 in.) wide bead of Mopar Gasket Maker, or Loctite 518 to mating surface of gear case. Keep sealer bead inside bolt holes as shown (Fig. 111).

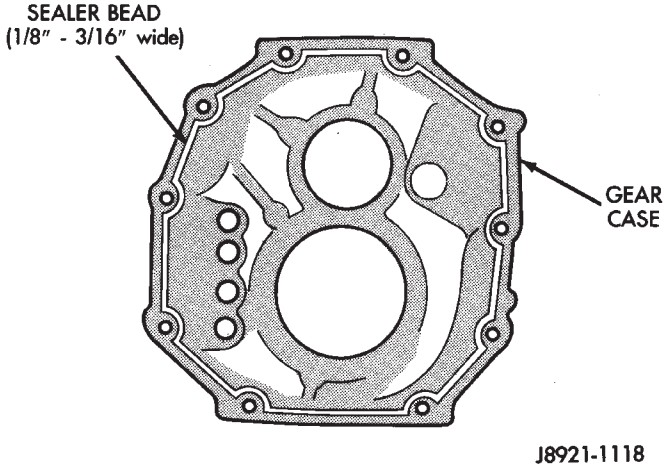

Fig. 111 Applying Sealer To Gear Case

(4) Install gear case (Fig. 112). Align shift rails and bearings in case and tap case into position.

(5) Verify that gear case is seated on intermediate plate dowel pins.

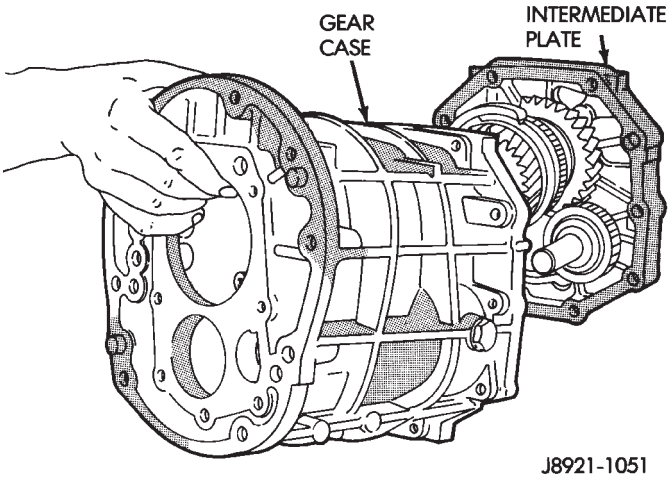

Fig. 112 Gear Case Installation

(6) Install front bearing snap rings (Fig. 113).

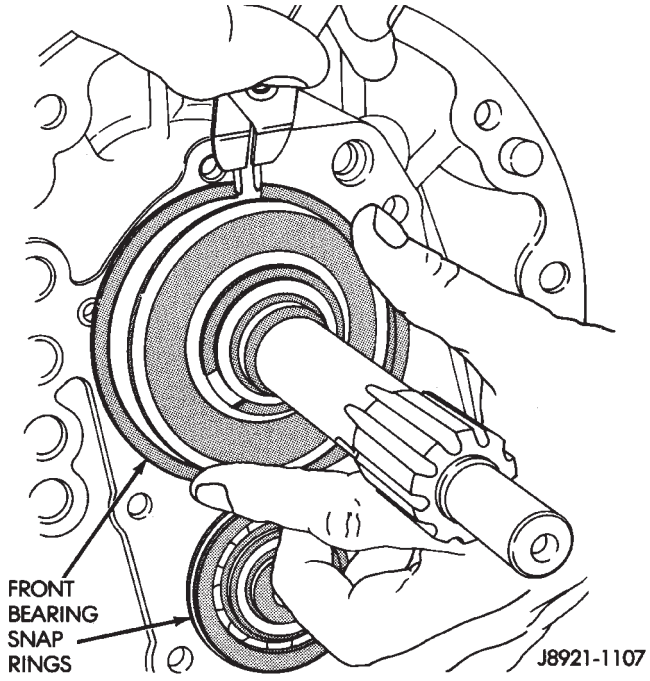

Fig. 113 Front Bearing Snap Ring Installation

(7) Clean gear case and front bearing retainer sealing surfaces with wax and grease remover. Then wipe dry with a clean cloth.

(8) Install new seal in front bearing retainer. Then lubricate seal lip with petroleum jelly. **Installation depth for seal is 10.5 to 11.5 mm (0.413 to 0.453 in.).**

(9) Apply a 3 mm (1/8 in.) wide bead of Mopar Gasket Maker, or Loctite 518 to front bearing retainer sealing surface.

(10) Align and install front bearing retainer (Fig. 114). Be sure retainer is properly seated on case and bearings.

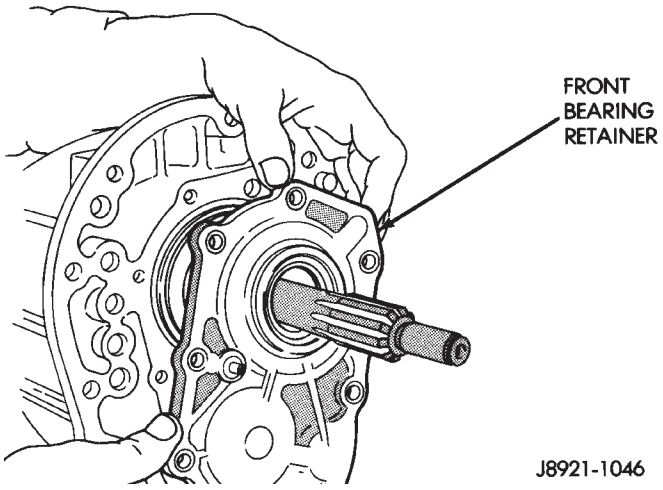

Fig. 114 Installing Front Bearing Retainer

(11) Install and tighten front bearing retainer bolts to 17 N·m (12 ft. lbs.) torque.

(12) On models with extension housing, install speedometer gear, lock ball and retaining rings (Fig. 115). Be sure lock ball is engaged in gear.

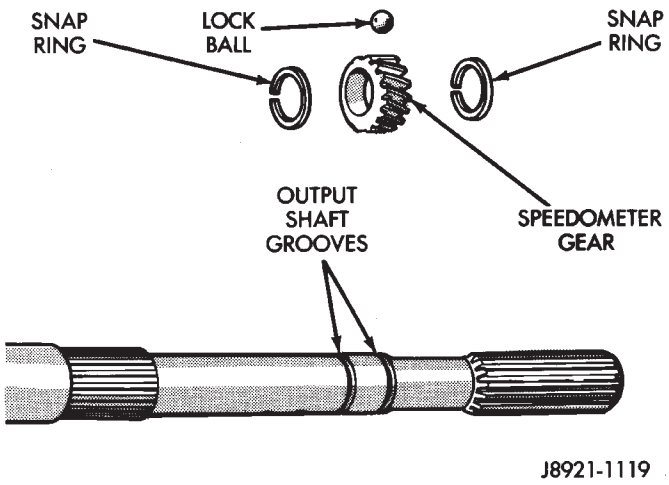

Fig. 115 Speedometer Gear Installation (2WD Models)

(13) Inspect condition of reverse pin in adapter/extension housing (Fig. 116). If pin is worn or damaged, replace it as follows:

(a) Remove roll pin access plug (Fig. 117).

(b) Tap roll pin out of housing with pin punch (Fig. 118). Then remove old reverse pin.

(c) Install new reverse pin and secure it with roll pin. Then install and tighten access plug to 19 N·m (14 ft. lbs.) torque.

(14) Clean sealing surfaces of adapter or extension housing and intermediate plate with wax and grease remover. Then wipe dry with a clean cloth.

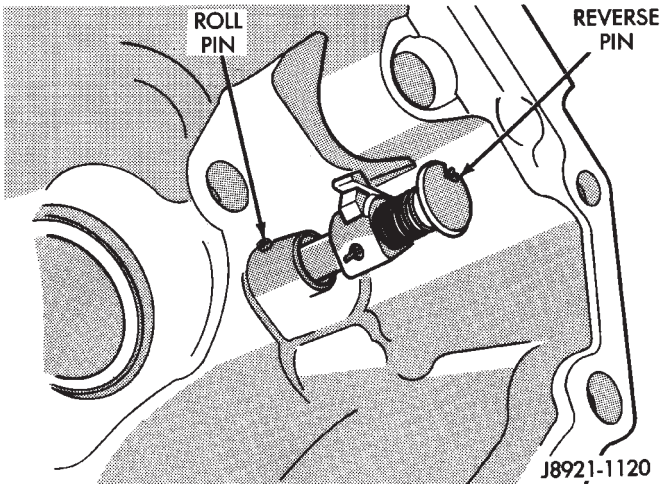

Fig. 116 Reverse Pin Position

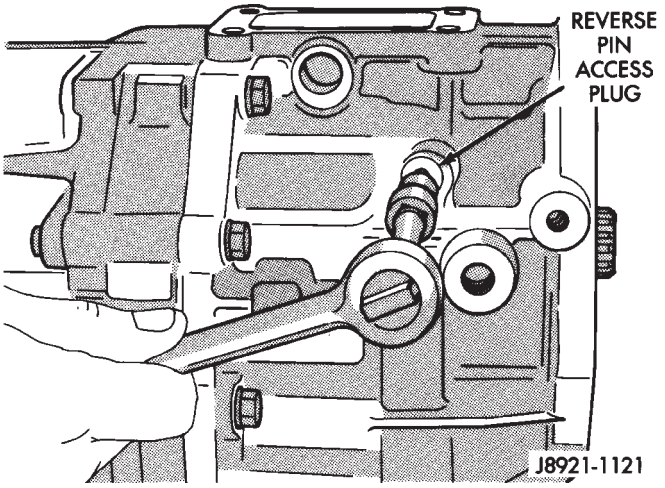

Fig. 117 Access Plug Removal/Installation

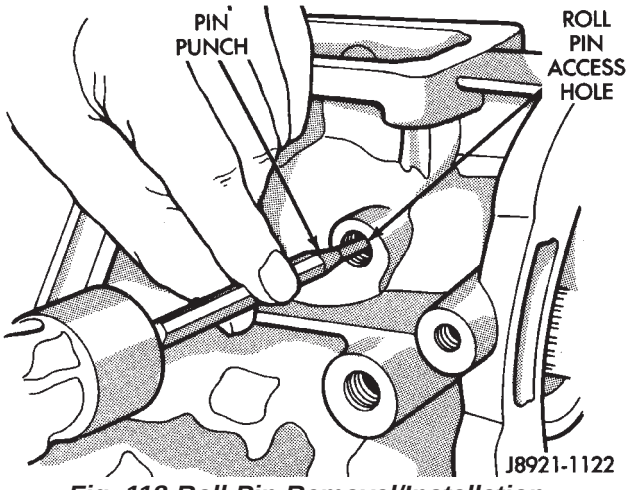

Fig. 118 Roll Pin Removal/Installation

(15) Apply 3 mm (1/8 in.) wide bead of Mopar Gasket Maker, or Loctite 518 to sealing surface of adapter or extension housing. Keep sealer bead inside bolt holes as shown in Figure 111.

(16) Align and install adapter or extension housing on intermediate plate (Fig. 119). Be sure housing is seated on intermediate plate dowel pins.

(17) Coat threads of housing attaching bolts with Mopar silicone sealer. Then install and tighten bolts to 37 N·m (27 ft. lbs.) torque.

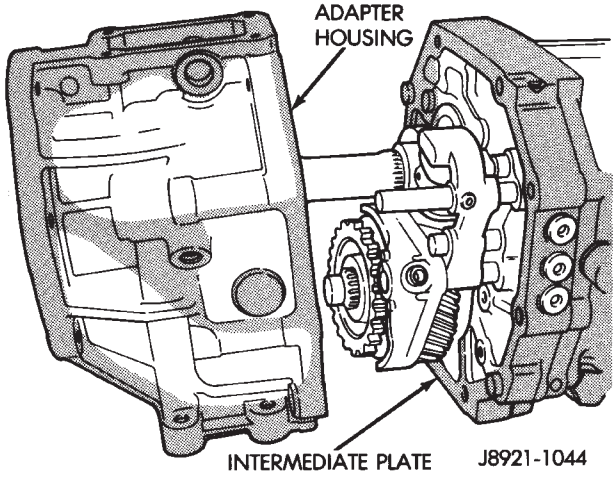

Fig. 119 Adapter/Extension Housing Installation

(18) Install detent ball (Fig. 120).

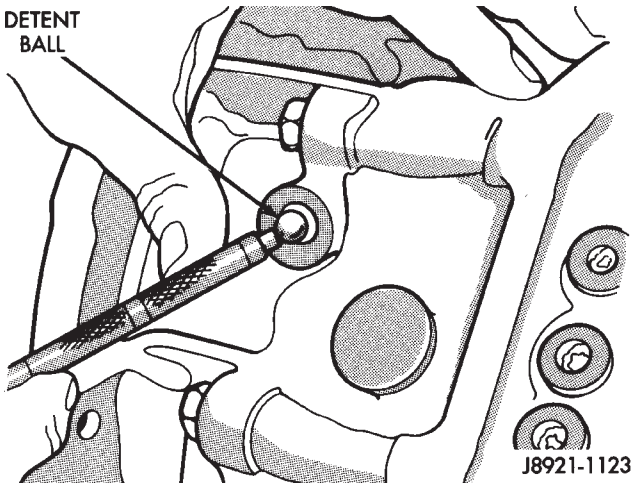

Fig. 120 Installing Detent Ball

(19) Install detent spring (Fig. 121).

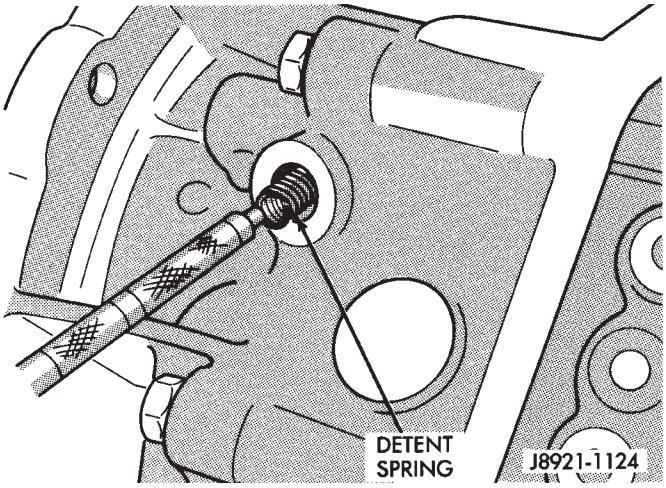

Fig. 121 Installing Detent Spring

(20) Install detent access plug (Fig. 122). Tighten plug to 19 N·m (14 ft. lbs.) torque.

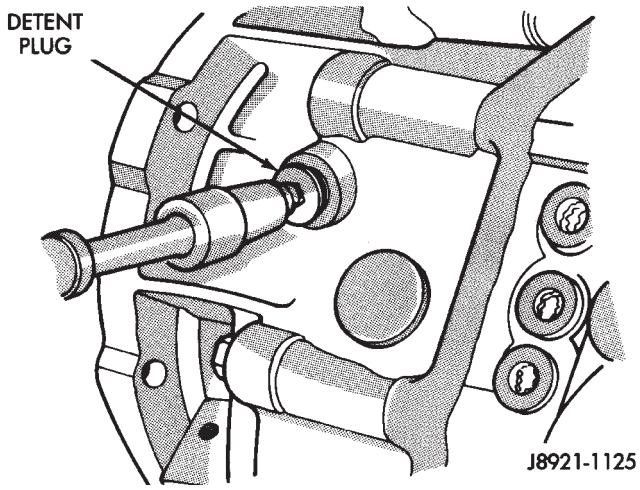

Fig. 122 Installing Detent Access Plug

(21) Lubricate shift arm shaft and install it in adapter housing (Fig. 123).

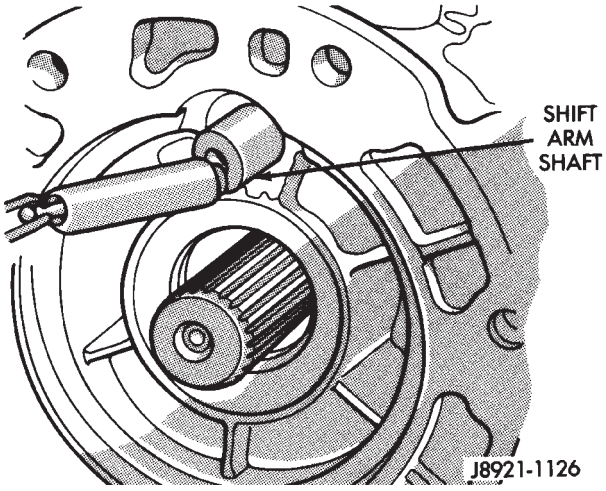

Fig. 123 Installing Shift Arm Shaft

(22) Position shift arm in adapter housing (Fig. 124). Be sure arm is engaged in shift rails.

(23) Align shift arm with shaft and push shaft into arm.

(24) Rotate shift arm shaft until set screw holes in shaft and arm are aligned.

(25) Install and tighten shift arm set screw to 38 N·m (28 ft. lbs.) torque (Fig. 125).

(26) Install and tighten restrictor pins to 19 N·m (14 ft. lbs.) torque (Fig. 125).

(27) Install and tighten shift arm shaft access plug to 19 N·m (14 ft. lbs.) torque (Fig. 126).

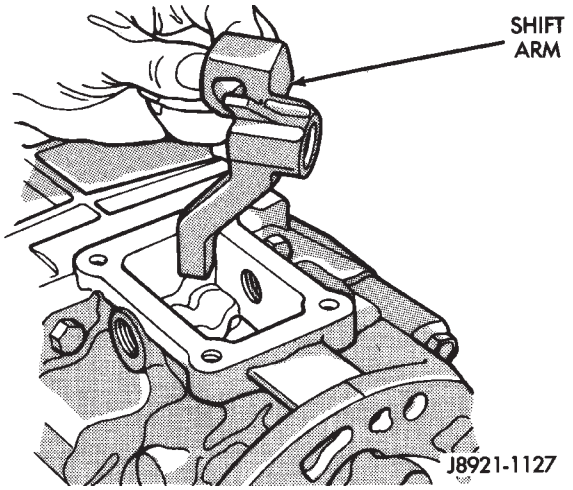

Fig. 124 Shift Arm Installation

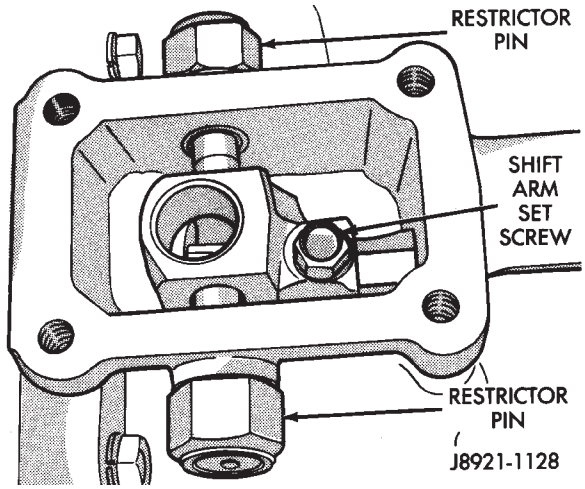

Fig. 125 Set Screw And Restrictor Pin Installation

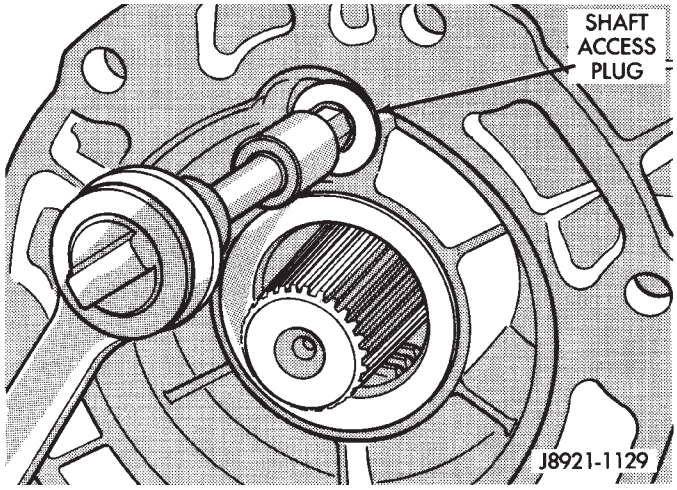

Fig. 126 Access Plug Installation

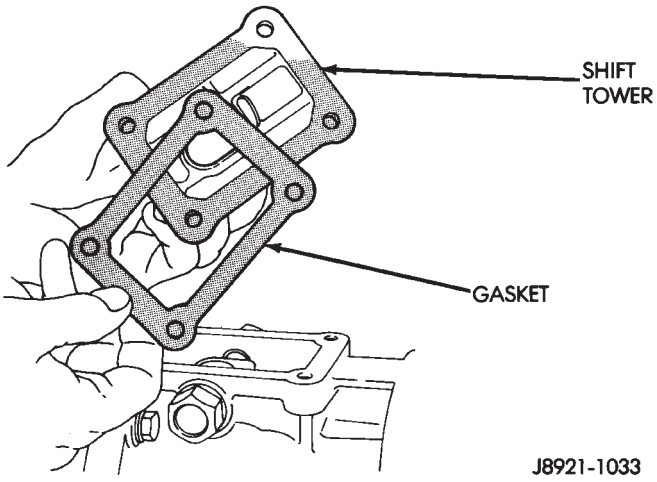

Fig. 127 Shift Tower Gasket Installation

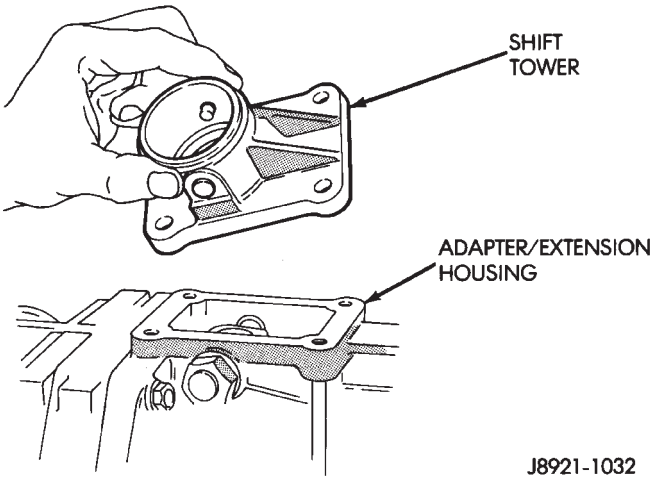

Fig. 128 Shift Tower Installation

(28) Position new shift tower gasket on adapter housing (Fig 127).

(29) Install shift tower (Fig. 128). Tighten tower attaching bolts to 18 N·m (13 ft. lbs.) torque.

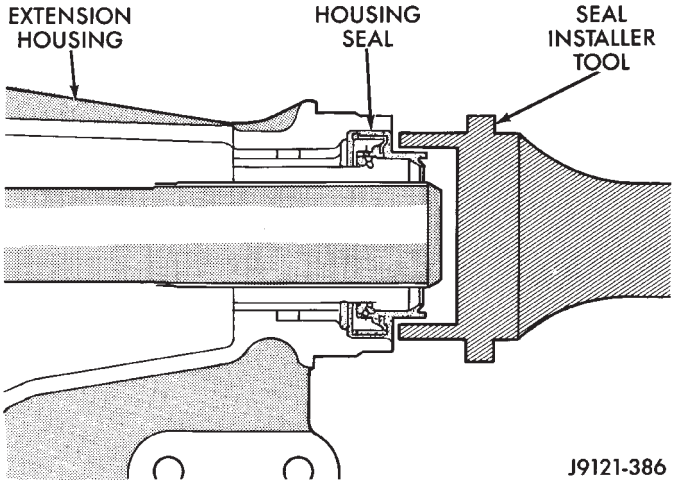

Fig. 129 Installing Extension Housing Seal

(30) Install new gasket on backup light switch and install switch. Tighten switch to 37 N·m (27 ft. lbs.) torque.

(31) Install new washer on drain plug. Then install and tighten plug to 37 N·m (27 ft. lbs.) torque.

(32) If transmission will be filled with gear lubricant before installation, place transmission in a level position. Then fill with Mopar 75W-90, grade GL-5 gear lubricant.

(33) Install new washer on fill plug. Then install and tighten plug to 37 N·m (27 ft. lbs.) torque.

(34) Install clutch housing and hydraulic concentric bearing.

(35) On models with extension housing, install new seal in housing with suitable size installer tool (Fig. 129). Lubricate seal lips with petroleum jelly before installation.

(36) On models with extension housing, install speedometer driven gear, speedometer adapter and speed sensor.

30RH/32RH AUTOMATIC TRANSMISSION

GENERAL INFORMATION

INDEX

page

Recommended Fluid 67
Torque Converter 67
Transmission Application 67
Transmission Changes and Parts Interchangeability . . 67
Transmission Controls and Components 67
Transmission Identification 67

TRANSMISSION APPLICATION

Chrysler 30RH and 32RH automatic transmissions are used in XJ/YJ models. Both are 3-speed automatic transmissions with a gear-type oil pump, two clutches and bands and a planetary gear system (Fig. 1).

The 30RH is used in XJ/YJ models with a 2.5L engine. The 32RH is used in YJ models with a 4.0L engine.

TORQUE CONVERTER

A three element, torque converter is used for all applications. The converter consists of an impeller, stator, and turbine.

The converter used with 30RH/32RH transmissions has a converter clutch. The clutch is engaged by an electrical solenoid and mechanical module on the valve body. The solenoid is operated by the powertrain control module.

The torque converter is a welded assembly and is not a repairable component. The converter is serviced as an assembly.

RECOMMENDED FLUID

The recommended and preferred fluid for 30RH/32RH transmissions is Mopar ATF Plus, Type 7176.

Dexron II is not really recommended and should only be used when ATF Plus is not available.

TRANSMISSION IDENTIFICATION

The transmission identification numbers are stamped on the left side of the case just above the oil pan gasket surface (Fig. 2). The first set of numbers is the transmission part number. The next set of code numbers set is the date of build. The final set of code numbers represents the transmission serial number.

TRANSMISSION CHANGES AND PARTS INTERCHANGEABILITY

1995 transmissions are similar to previous models but only in appearance. Current transmissions are dimensionally different. Do not interchange new/old parts. Different dimensions, fluid passages, input/output shafts, cases, bands, valve bodies and governor assemblies are just a few of the changed items.

CAUTION: Special bolts are used to attach the driveplate to the crankshaft on models with a 2.5L engine and 30RH transmission,. These bolts have a smaller hex head for torque converter clearance. DO NOT interchange these bolts with similar size bolts for any reason.

Different governor weight assemblies are used in 30RH/32RH transmissions. The 30RH weight assembly is much the same as in previous years. However, the 32RH has a three stage governor weight assembly consisting of the outer weight, a smaller weight spring, and a new intermediate weight. Refer to the overhaul and in-vehicle service sections for more detailed information.

Plastic check balls are now used in many 30RH/32RH valve bodies. The new check balls entered production as a running change. Plastic and steel check balls are not interchangeable.

A converter drainback check valve has been added to the fluid cooler system. The one-way valve is located in the transmission outlet (pressure) line. The valve prevents fluid drainback when the vehicle is parked for lengthy periods.

TRANSMISSION CONTROLS AND COMPONENTS

The transmission hydraulic control system performs five basic functions, which are:

- pressure supply
- pressure regulation
- flow control
- clutch/band apply and release
- lubrication

Pressure Supply And Regulation

The oil pump generates the fluid working pressure needed for operation and lubrication. The pump is

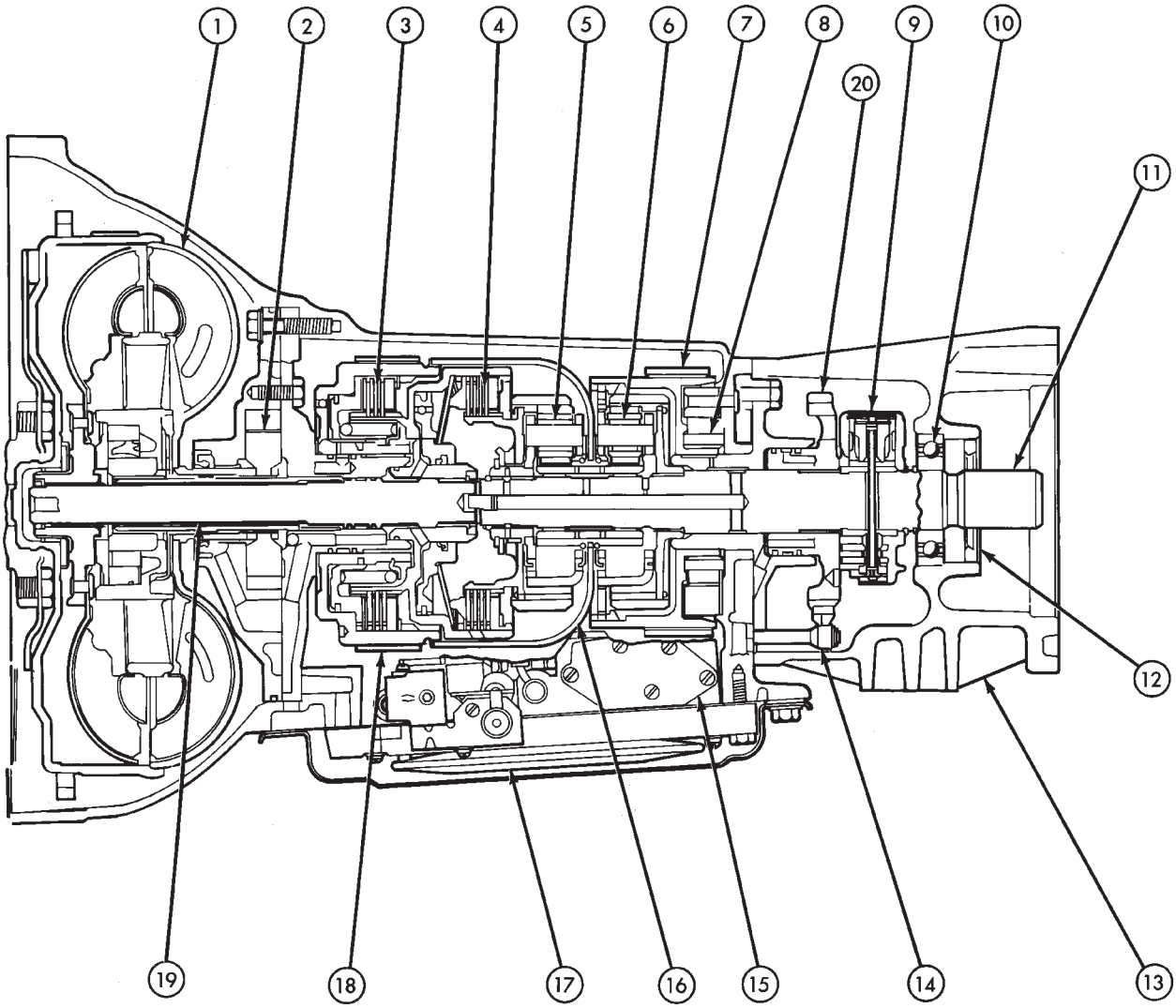

1. CONVERTER
2. OIL PUMP
3. FRONT CLUTCH
4. REAR CLUTCH
5. FRONT PLANETARY GEAR SET
6. REAR PLANETARY GEAR SET
7. LOW AND REVERSE (REAR) BAND
8. OVERRUNNING CLUTCH
9. GOVERNOR
10. BEARING
11. OUTPUT SHAFT
12. SEAL
13. ADAPTER HOUSING
14. PARK LOCK ROD
15. VALVE BODY
16. SUN GEAR DRIVING SHELL
17. OIL FILTER
18. KICK DOWN (FRONT) BAND
19. INPUT SHAFT
20. PARK GEAR

J9021-30

Fig. 1 30RH/32RH Automatic Transmission

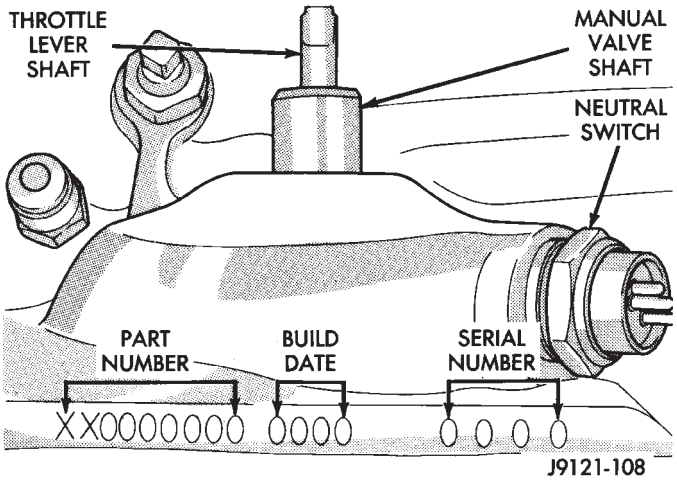

Fig. 2 Transmission Identification

driven by the torque converter. The converter is connected to the engine crankshaft through the driveplate.

The pressure regulator valve maintains line pressure. The regulator valve is located in the valve body. The amount of line pressure developed is controlled by throttle pressure, which is dependent on the degree of throttle opening.

The governor valve is operated by the transmission output shaft. Governor pressure increases approximately in proportion to vehicle speed.

The throttle valve determines line pressure and shift speed. The throttle valve also controls upshift and downshift speeds by regulating pressure in conjunction with throttle position.

Shift Valves

The manual valve is operated by the gearshift linkage and provides the operating range selected by the driver.

The 1-2 shift valve provides automatic 1-2 or 2-1 shifts and the 2-3 shift valve provides automatic 2-3 or 3-2 shifts. The kickdown valve provides forced 3-2 or 3-1 downshifts depending on vehicle speed. Downshifts occur when the throttle is opened beyond downshift detent position which is just before wide open throttle.

The 2-3 valve throttle pressure plug provides 3-2 downshifts with varying throttle openings and depending on vehicle speed. The 1-2 shift control valve transmits 1-2 shift pressure to the accumulator piston to control kickdown band capacity on 1-2 upshifts and 3-2 downshifts.

The shuttle valve has two functions. First is fast front band release and smooth engagement during lift-foot 2-3 upshifts. The second is to regulate front clutch and band application during 3-2 downshifts.

Clutches-Bands-Servos-Accumulator

The front/rear clutch pistons and servo pistons are actuated by line pressure. When line pressure is removed, the pistons are released by spring tension.

On 2-3 upshifts, the front servo piston is released by spring tension and hydraulic pressure. The accumulator controls hydraulic pressure on the apply side of the front servo during 1-2 upshifts and at all throttle openings.

Converter Clutch Controls

Converter clutch operation is controlled by the power train control module, and by the solenoid and clutch module on the valve body. The solenoid is operated by a relay on the engine compartment side of the dash panel.

Activating the solenoid opens a vent allowing fluid to flow into the clutch module. When line pressure exceeds tension of the module valve springs, the module valves open. This allows fluid to be channeled to the converter clutch through the reaction shaft support and transmission shaft.

Gearshift And Park Lock Controls

The gearshift lever provides six operating positions: Park (P), Reverse (R), Neutral (N), and the D, 2 and 1 forward drive ranges.

Manual 1 position provides first gear only. Overrun braking occurs in 1 range when the throttle is released. Upshifts are not provided in 1 range.

Manual 2 range provides first and second gear. A 1-2 upshift will take place but a 2-3 upshift will not occur.

D position provides 1-2, 2-3 upshifts and 3-2 and 3-1 downshifts.

Park position allows the park rod to move the park pawl into engagement with the park gear. This prevents rotation of the transmission output shaft. The park lock mechanism is only engaged when the shift lever is in the Park detent.

A park/neutral position switch controls engine starting. The switch is designed to allow engine starts only in park or neutral positions.

30RH/32RH TRANSMISSION DIAGNOSIS

INDEX

	page
Air Pressure Test	74
Analyzing the Road Test	71
Converter Housing Leak Diagnosis	75
Converter Stall Test	74
Diagnosis Guides and Charts	77
Effects of Incorrect Fluid Level	71
Fluid Level Check	70
Gearshift Cable/Linkage Adjustment	71
General Information	70
Hydraulic Pressure Test	72
Preliminary Diagnosis	70
Road Test	71
Transmission Throttle Valve Cable Adjustment	71

GENERAL INFORMATION

Automatic transmission problems are generally a result of:

- poor engine performance
- incorrect fluid level
- incorrect throttle valve cable adjustment
- incorrect band adjustment
- incorrect hydraulic control pressure adjustments
- hydraulic component malfunctions
- mechanical component malfunctions.

Begin diagnosis by checking the easily accessible items such as fluid level, fluid condition and control linkage adjustment. A road test will determine if further diagnosis is necessary.

Procedures outlined in this section should be performed in the following sequence to realize the most accurate results:

- Preliminary diagnosis
- Check fluid level and condition
- Check control linkage Adjustment
- Road test
- Stall test
- Hydraulic pressure test
- Air pressure tests
- Leak test
- Analyze test results and consult diagnosis charts

PRELIMINARY DIAGNOSIS

Two basic procedures are required. One procedure for vehicles that are driveable and an alternate procedure for disabled vehicles (will not back up or move forward).

Vehicle Is Driveable

(1) Check fluid level and condition.

(2) Adjust throttle cable and gearshift linkage if complaint was based on delayed, erratic, or harsh shifts.

(3) Road test vehicle and note transmission operating characteristics.

(4) Perform stall test if complaint is based on sluggish, low speed acceleration or abnormal throttle opening needed to maintain normal speeds with properly tuned engine.

(5) Perform hydraulic pressure tests.

(6) Perform air pressure test to check clutch-band operation.

Vehicle Is Disabled

(1) Check fluid level and condition.

(2) Check for broken, disconnected throttle linkage.

(3) Check for cracked, leaking cooler lines, or loose, missing pressure port plugs.

(4) Raise vehicle, start engine, shift transmission into gear and note following:

(a) If propeller shafts turn but wheels do not, problem is with differential or axle shafts.

(b) If propeller shafts do not turn and transmission is noisy, stop engine. Remove oil pan, and check for debris. If pan is clear, remove transmission and check for damaged drive plate, converter, oil pump or input shaft.

(c) If propeller shafts do not turn and transmission is not noisy, perform hydraulic pressure test to determine if problem is a hydraulic or mechanical.

FLUID LEVEL CHECK

Transmission fluid level should be checked monthly under normal operation. If the vehicle is used for trailer towing or similar heavy load hauling, check fluid level and condition weekly.

Fluid level is checked with the engine running at curb idle speed, the transmission in Neutral and the transmission fluid at normal operating temperature.

FLUID LEVEL CHECK PROCEDURE

(1) Transmission fluid must be at normal operating temperature for accurate fluid level check. Drive vehicle if necessary to bring fluid temperature up to normal hot operating temperature of 82°C (180°F).

(2) Position vehicle on level surface. This is extremely important for accurate fluid level check.

(3) Start and run engine at curb idle speed.

(4) Apply parking brakes.

(5) Shift transmission momentarily into all gear ranges. Then shift transmission back to Neutral.

(6) Clean top of filler tube and dipstick to keep dirt from entering tube.

(7) Remove dipstick and check fluid level as follows:

(a) Dipstick has three fluid level indicator levels (Fig. 1) which are: a MIN dot, an OK crosshatch area, and a MAX fill arrow.

(b) Correct maximum level is to MAX arrow mark. Correct acceptable level is to OK mark in crosshatch area.

(c) Incorrect level is at or below MIN dot.

(d) If fluid is low, add only enough Mopar ATF Plus to restore correct level. Do not overfill.

CAUTION: Do not overfill the transmission. Overfilling may cause leakage out the pump vent which can be mistaken for a pump seal leak. Overfilling will also cause fluid aeration and foaming as the excess fluid is picked up and churned by the gear train. This will significantly reduce fluid life.

EFFECTS OF INCORRECT FLUID LEVEL

A low fluid level allows the pump to take in air along with the fluid. Air in the fluid will cause fluid pressures to be low and develop slower than normal.

If the transmission is overfilled, the gears churn the fluid into foam. This aerates the fluid causing the same conditions that occur with a low level.

In either case, air bubbles cause fluid overheating, oxidation and varnish buildup which interferes with valve, clutch and servo operation. Foaming also causes fluid expansion which can result in fluid overflow from the transmission vent or fill tube. Fluid overflow can easily be mistaken for a leak if inspection is not careful.

TRANSMISSION THROTTLE VALVE CABLE ADJUSTMENT

Throttle cable adjustment is important to proper operation. This adjustment positions the throttle valve which controls shift speed, quality and part throttle downshift sensitivity.

If cable adjustment setting is too short, early shifts and slippage between shifts may occur. If the setting is too long, shifts may be delayed and part throttle downshifts may be very sensitive. Refer to the In-Vehicle Service section for adjustment procedure.

GEARSHIFT CABLE/LINKAGE ADJUSTMENT

Gearshift cable/linkage adjustment is important because it positions the valve body manual valve. Incorrect adjustment will cause creeping in Neutral, premature clutch wear, delayed engagement in any gear, or a no-start in Park or Neutral position.

Proper operation of the neutral start switch will provide a quick check on adjustment. Refer to the In-Vehicle Service section for adjustment procedure.

ROAD TEST

Before road testing, be sure the fluid level and all cable/linkage adjustments have been checked and adjusted if necessary.

Observe engine performance during the road test. A poorly tuned engine will not allow an accurate analysis of transmission operation.

Operate the transmission in all gear ranges. Check for slippage and shift variations. Note whether the shifts are harsh, spongy, delayed, early, or if part throttle downshifts are sensitive.

Watch closely for slippage or engine flare which usually indicates clutch, band or overrunning clutch problems. If the condition is advanced, an overhaul may be necessary to restore normal operation.

A slipping clutch or band can often be determined by comparing which internal units are applied in the various gear ranges. The Clutch and Band Application chart (Fig. 3) provides a basis for analyzing road test results.

DRIVE ELEMENTS	Gearshift Lever Position								
	P	R	N	D			2		1
				1	2	3	1	2	
FRONT CLUTCH		•				•			
FRONT BAND (KICKDOWN)					•			•	
REAR CLUTCH				•	•	•	•	•	•
REAR BAND (LOW-REV.)		•							•
OVER-RUNNING CLUTCH				•			•		•

J9021-33

Fig. 3 Clutch And Band Application Chart

ANALYZING THE ROAD TEST

Refer to the Clutch and Band Application chart (Fig. 3) and note which elements are in use in the various gear ranges.

The rear clutch is applied in all forward ranges (D, 2, 1). The overrunning clutch is applied in first gear (D and 2 range only). The rear band is applied in 1 and R range only.

For example: If slippage occurs in first gear in D and 2 range but not in 1 range, the overrunning

clutch is slipping. Similarly, if slippage occurs in any two forward gears, the rear clutch is slipping.

Applying the same method of analysis, note that both clutches are applied in D range third gear only. If the transmission slips in third gear, either the front clutch or the rear clutch is slipping. By selecting another gear which does not use one of these units, the slipping clutch can be determined.

Although road test analysis will help determine the slipping unit, the actual cause of a malfunction may not be determined until hydraulic and air pressure tests are performed. Practically any condition can be caused by leaking hydraulic circuits or sticking valves. Unless the problem is an obvious one, do not remove and disassemble the transmission until hydraulic and air pressure tests have been performed.

HYDRAULIC PRESSURE TEST

Hydraulic test pressures range from a low of one psi (6.895 kPa) governor pressure, to 300 psi (2068.5 kPa) at the rear servo pressure port in reverse.

Use 100 psi Pressure Gauge C-3292 to check pressure at the accumulator, front servo, governor and fluid cooler line. Use 300 psi Gauge C-3293 to check pressure at the rear servo. The 300 psi gauge can be used at any other port when more than one gauge is required for testing.

PRESSURE TEST PORT LOCATIONS

There are pressure test ports at the accumulator, front servo, rear servo and governor.

Line pressure is checked at the accumulator port on the right side of the case (Fig. 4). The front servo release pressure port is at the right side of the case just behind the filler tube opening (Fig. 4).

The rear servo pressure port is at the right rear of the transmission case (Fig. 5).

On 4 x 2 models, the governor pressure port is at the left side of case at the transmission rear (Fig. 5). On 4 x 4 transmissions, the test port is in the driver side of the adapter housing (Fig. 6).

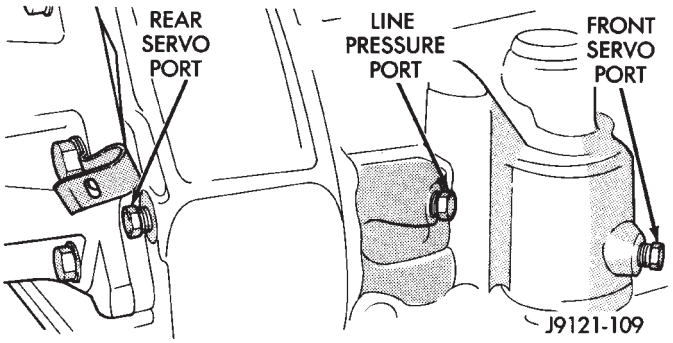

Fig. 4 Front Servo And Line Pressure Test Ports

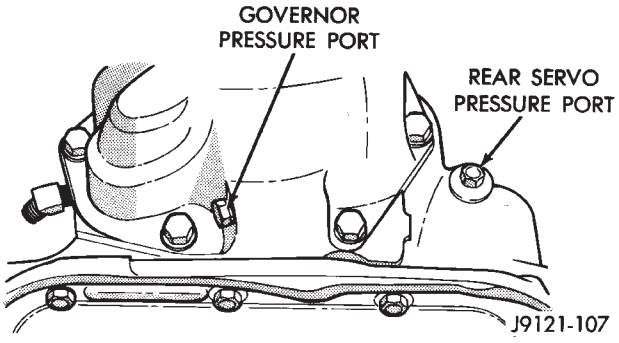

Fig. 5 Rear Servo And Governor Pressure Test Ports (4 x 2 Transmission)

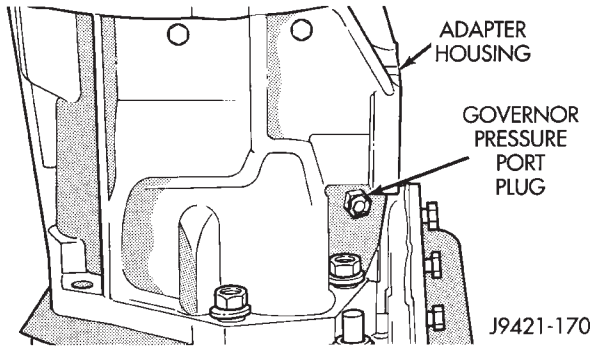

Fig. 6 Governor Pressure Test Port (4 x 4 Transmission)

PRESSURE TEST PROCEDURE

Connect a tachometer to the engine. Position the tachometer so it can be observed from under the vehicle. Raise the vehicle on a hoist that will allow the wheels to rotate freely.

Test One-Transmission In 1 Range

This test checks pump output, pressure regulation, and condition of the rear clutch and rear servo circuits. Use both test gauges for this test

(1) Connect Test Gauge C-3292 to line pressure port and Test Gauge C-3293 to rear servo port (Figs. 4-6).

(2) Disconnect throttle and gearshift rods at transmission.

(3) Start and run engine at 1000 rpm.

(4) Move valve body selector lever forward into 1 range.

(5) Read pressures on both gauges as transmission throttle lever is moved from full forward to full rearward position.

(a) Line pressure should be 54-60 psi (372-414 kPa) with throttle lever forward and gradually increase to 90-96 psi (620-662 kPa) as lever is moved rearward.

(b) Rear servo pressure should be same as line pressure within 3 psi.

Test Two-Transmission In 2 Range

This test checks pump output and pressure regulation. Use 100 psi Test Gauge C-3292 for this test.

(1) Connect test gauge to line pressure port (Fig. 4).

(2) Start and run engine at 1000 rpm.

(3) Move valve body selector lever one detent rearward from full forward position (this is 2 range).

(4) Move transmission throttle lever from full forward to full rearward position and read pressure at both gauges.

(5) Line pressure should be 54-60 psi (372-414 kPa) with throttle lever forward and gradually increase to 90-96 psi (620-662 kPa) as lever is moved rearward.

Test Three-Transmission In Third Gear

This test checks pressure regulation and condition of the front and rear clutch circuits. Both gauges are required for this test.

(1) Connect one test gauge to line pressure port and other gauge to front servo pressure port (Fig. 4). Either gauge can be used at either port.

(2) Start and run engine at 1600 rpm.

(3) Move selector lever two detents rearward from full forward position. This is D range.

(4) Read pressures on both gauges as transmission throttle lever is moved from full forward to full rearward position.

(a) Line pressure in third gear, should be 54-60 psi (372-414 kPa) with throttle lever forward and gradually increase as lever is moved rearward.

(b) Front servo pressure in third gear, should be within 3 psi (21 kPa) of line pressure, up to downshift point.

Test Four-Transmission In Reverse

This test checks pump output, pressure regulation and the front clutch and rear servo circuits. Use 300 psi Pressure Test Gauge C-3293 for this test.

(1) Connect pressure test gauge to rear servo port (Fig. 5).

(2) Start and run engine at 1600 rpm for test.

(3) Move valve body selector lever four detents rearward from full forward position. This is Reverse range.

(4) Move throttle lever all way forward then all the way rearward and note gauge readings.

(5) Pressure should be 145 - 175 psi (1000-1207 kPa) with lever forward and increase to 230 - 280 psi (1586-1931 kPa) as lever is moved rearward.

Test Five-Governor Pressure

This test checks governor operation by measuring governor pressure response to changes in engine speed. It is usually not necessary to check governor operation unless shift speeds are incorrect or if the transmission will not shift up or down. Use 100 psi Pressure Test Gauge C-3292 for this test.

(1) Connect test gauge to governor pressure port (Figs. 5 and 6).

(2) Move selector lever to D range.

(3) Apply service brakes. Start and run engine at curb idle speed and note pressure. At idle and with wheels stopped, pressure should be zero to 1-1/2 psi maximum. If pressure exceeds this figure, governor valve or weights are sticking open.

(4) Slowly increase engine speed and observe speedometer and pressure test gauge. Governor pressure should increase in proportion to vehicle speed (approximately 1 psi for every 1 mph shown on speedometer).

(5) Governor pressure rise should be smooth and drop back to 0 to 1-1/2 psi when throttle is closed and wheels are stopped.

(6) Compare results of pressure tests with analysis chart (Fig. 7).

TEST CONDITION	INDICATION
Line pressure OK during any one test	Pump and regulator valve OK
Line pressure OK in R but low in D, 2, 1	Leakage in rear clutch area (servo, clutch seals, governor support seal rings on park gear)
Pressure OK in 1, 2 but low in D3 and R	Leakage in front clutch area (servo, clutch seals, retainer bore, pump seal rings)
Pressure OK in 2 but low in R and 1	Leakage in rear servo
Front servo pressure in 2	Leakage in servo (broken servo ring or cracked servo piston)
Pressure low in all positions	Clogged filter, stuck pressure regulator valve, worn or defective pump
Governor pressure too high at idle speed	Governor valve sticking open
Governor pressure low at all mph figures	Governor valve sticking closed
Lubrication pressure low at all throttle positions	Clogged drainback valve, oil cooler or lines, seal rings leaking, output shaft plugged with debris, worn bushings in pump or clutch retainer
	J9521-129

Fig. 7 Pressure Test Analysis Chart

CONVERTER STALL TEST

Stall testing involves determining maximum engine rpm obtainable at full throttle with the rear wheels locked and the transmission in D range. This test checks the holding ability of the converter overrunning clutch and both of the transmission clutches. When stall testing is completed, refer to the Stall Speed Specifications chart and Stall Speed Diagnosis guides.

WARNING: NEVER ALLOW ANYONE TO STAND IN FRONT OF THE VEHICLE DURING A STALL TEST. ALWAYS BLOCK THE FRONT WHEELS AND APPLY THE SERVICE AND PARKING BRAKES DURING THE TEST.

STALL TEST PROCEDURE

(1) Connect tachometer to engine.
(2) Check and adjust transmission fluid level.
(3) Start and run engine until transmission fluid reaches normal operating temperature.
(4) Block front wheels.
(5) Fully apply service and parking brakes.
(6) Open throttle completely and record maximum engine rpm registered on tachometer. It will take from 3 to 10 seconds to reach maximum rpm. However, once maximum rpm has been achieved, **do not hold wide open throttle for more than 5 seconds.**

CAUTION: Stalling the converter causes a rapid increase in fluid temperature. To avoid fluid overheating, hold wide open throttle for no more than 5 seconds after reaching peak rpm. In addition, if more than one stall test is required, run the engine at 1000 rpm with the transmission in Neutral for at least 20 seconds to cool the fluid.

(7) Stall speeds should be in 1700-2150 rpm range.

CAUTION: If engine exceeds 2150 rpm, release accelerator pedal immediately as transmission clutch slippage is occurring.

(8) Shift transmission into Neutral. Run engine for 20-30 seconds at 1000 rpm to cool fluid. Then stop engine, shift transmission into Park and release brakes.
(9) Refer to Stall Test Diagnosis.

STALL TEST DIAGNOSIS

Stall Speed Too Low

Low stall speeds with a properly tuned engine indicate a torque converter overrunning clutch problem. The condition should be confirmed by road testing prior to converter replacement.

The converter overrunning clutch is slipping when stall speeds are 250 to 350 rpm below specified minimum.

A converter overrunning clutch failure will result in sluggish acceleration in all speed ranges. It will also require greater than normal throttle opening to maintain cruising speeds.

Stall Speed Too High

If stall speed exceeds 2150 rpm, transmission clutch slippage is occurring.

Stall Speed Normal But Acceleration Is Sluggish

If stall speeds are within specified range but abnormal throttle opening is required for acceleration, or to maintain cruise speeds, the converter overrunning clutch is seized. The torque converter will have to be replaced.

Converter Noise During Test

A whining noise caused by fluid flow is normal during a stall test. However, loud metallic noises indicate a damaged converter. To confirm that noise is originating from the converter, operate the vehicle at light throttle in Drive and Neutral on a hoist and listen for noise from the converter housing.

AIR PRESSURE TEST

Air pressure testing can be used to check clutch and band operation with the transmission either in the vehicle, or on the work bench as a final check after overhaul.

Air pressure testing requires that the oil pan and valve body be removed from the transmission.

The servo and clutch apply passages are shown in Figure 8.

Air Test Procedure

(1) Place one or two fingers on the clutch housing and apply air pressure through front clutch apply passage (Fig. 8). Piston movement can be felt and a soft thud heard as the clutch applies.
(2) Place one or two fingers on the clutch housing and apply air pressure through rear clutch apply passage (Fig. 8). Piston movement can be felt and a soft thud heard as the clutch applies.
(3) Apply air pressure to the front servo apply passage. The servo rod should extend and cause the band to tighten around the drum. Spring tension should release the servo when air pressure is removed.
(4) Apply air pressure to the rear servo apply passage. The servo rod should extend and cause the band to tighten around the drum. Spring tension should release the servo when air pressure is removed.

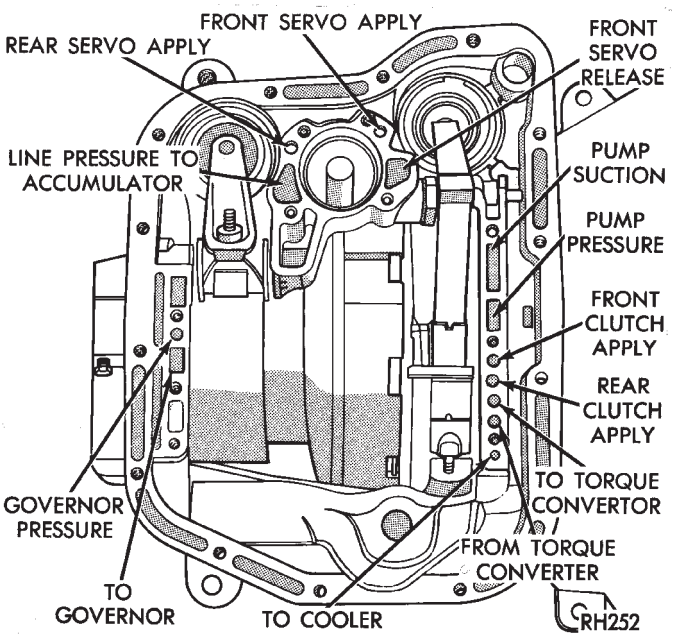

Fig. 8 Air Pressure Test Passages

CONVERTER HOUSING LEAK DIAGNOSIS

Two items must be established when diagnosing leaks from the converter housing area. First, it must be verified that a leak condition actually exists. And second, the true source of the leak must be determined.

Some suspected converter housing fluid leaks may not be leaks at all. Residual fluid in the housing, or excess fluid spilled during factory fill or refill after repair can be mistaken for a leak. In addition, a rear main seal leak can also be mistaken for a pump seal leak if care is exercised.

Converter housing leaks have several potential sources. Through careful observation, a leak source can be identified before removing the transmission for repair.

Pump seal leaks tend to move along the drive hub and onto the rear of the converter. Pump O-ring or pump body leaks follow the same path as a seal leak (Fig. 9).

Pump vent or pump attaching bolt leaks are generally deposited on the inside of the converter housing and not on the converter itself (Fig. 9).

Pump seal or gasket leaks usually travel down the inside of the converter housing.

Front band lever pin plug leaks are generally deposited on the housing and not on the converter.

LEAK DIAGNOSIS PROCEDURE

(1) Raise the rear of the vehicle and allow accumulated fluid to drain out of the converter housing.

(2) Check and adjust the transmission fluid level.

(3) Raise the vehicle. Remove the converter housing dust cover and wipe as much fluid as possible from the converter housing.

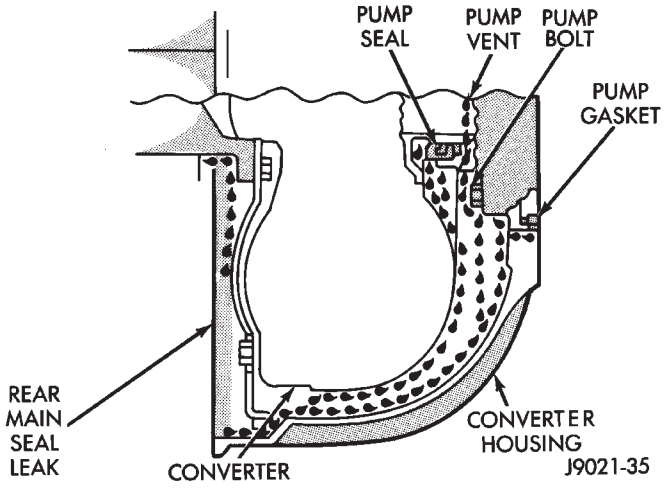

Fig. 9 Typical Converter Housing Leak Paths

(4) Fabricate a test probe (Fig. 10). Then attach the probe to the converter housing with one of the dust shield bolts (Fig. 10).

(5) Have a helper run the engine at 2500 rpm (with the transmission in Neutral) for two minutes; then stop the engine.

(6) Inspect the test probe and converter housing. If a leak is evident, note the color of the fluid. Transmission fluid is red. Engine oil ranges in color from brown to green, or to black when the oil is dirty.

(7) If the probe upper surface is dry, the converter and seal are not at fault. A path of fluid across the probe upper surface indicates a converter or seal leak. Fluid leaking **under** the probe is coming from the pump housing area (Fig. 11).

(8) Fluid leaking under the probe could be from the: pump seal and/or bushing, pump vent, kickdown lever shaft access plug, pump bolts, or porous spots in the pump body or transmission case (Fig. 11).

(9) If porous spots in the transmission case or pump body are the suspected leak source, pressurize the transmission as described in Leak Testing With Air Pressure.

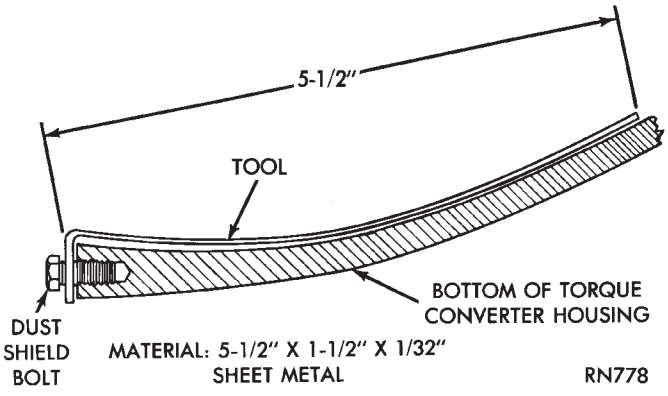

Fig. 10 Leak Test Probe

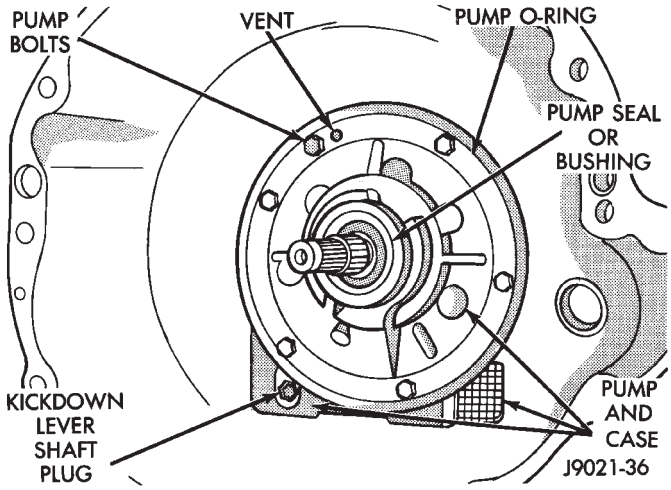

Fig. 11 Pump Area Inspection Points

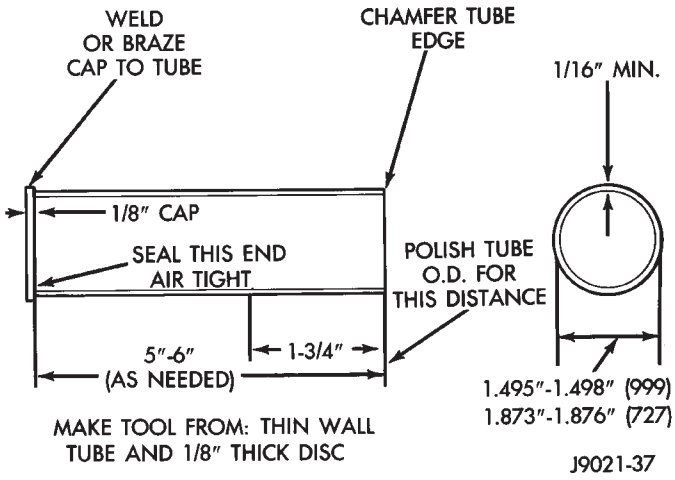

Fig. 12 Converter Hub Seal Cup

LEAK TESTING WITH AIR PRESSURE

This test involves closing off the transmission openings and pressurizing the transmission to 8 psi with Air Pump Tool 7700.

A soapy water solution is applied to suspected leak points before and during the pressure test. Leaks will be indicated by the presence of air bubbles coming through the solution.

Some transmission openings such as the fill tube and front cooler line fitting can be closed off with a rubber plug or similar device. Plugs can secured with wire or duct tape.

The transmission rear output shaft opening is closed off simply by leaving the transfer case bolted in place. However, if the transfer case has been removed, a shipping plug can used to close off this opening.

The torque converter hub opening in the pump and the pump vent require special tools to close them off. The converter hub seal cap is made from thin wall tube and a 3 mm (1/8 in.) thick disc (Fig. 12). A retaining strap is needed to secure the seal cup for testing. The strap can be made from 32 mm (1-1/4 in.) wide stock (Fig. 13). The strap attaching hole positions are approximate only. Measure hole position on the converter housing before drilling.

The pump vent tool is made from 6 mm (1/4 in.) rod and 5 mm (3/16 in.) plate (Fig. 14). The fabricated tools can all be made from mild steel or aluminum stock.

AIR PRESSURE LEAK TEST PROCEDURE

(1) Install vent plug, converter hub seal cup and cup retaining strap (Fig. 15).

(2) Close off remaining transmission openings with rubber plugs, or stoppers. **Do not close off rear cooler line fitting. Air pump will be attached to this fitting.**

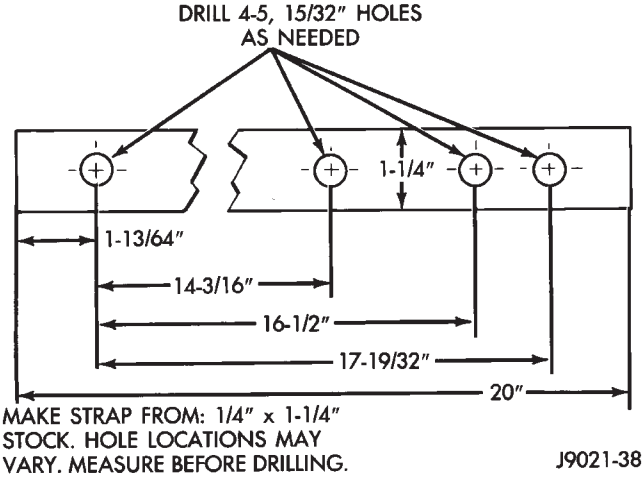

Fig. 13 Seal Cup Retaining Strap

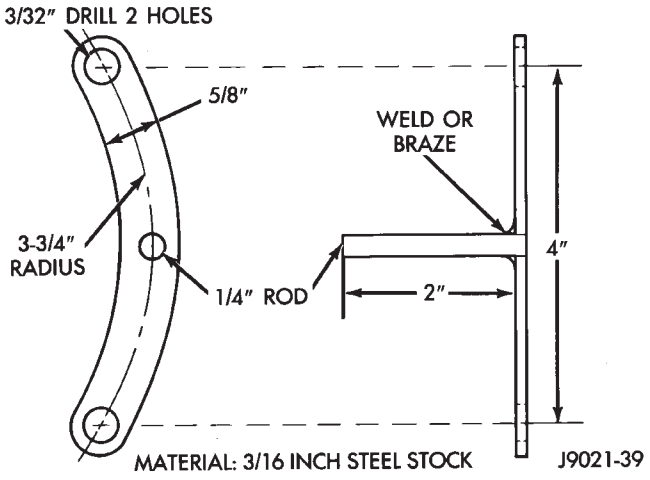

Fig. 14 Pump Vent Plug

(3) Attach Air Pump 7700 to rear cooler line fitting. Connect length of copper tube to fitting. Then attach air pump hose to tube with hose clamp (Fig. 16).

(4) Apply thick soapy water solution to suspected leak areas.

CAUTION: The recommended test pressure is 8 psi. The maximum allowable test pressure is 10 psi. Do not exceed specified test pressure.

(5) Pressurize transmission to 8 psi with air pump.

(6) Observe suspected leak areas. Air bubbles appearing in soapy water solution indicate leak points.

(7) Remove test tools and plugs after test completion and make necessary repairs as described in Leak Correction procedure.

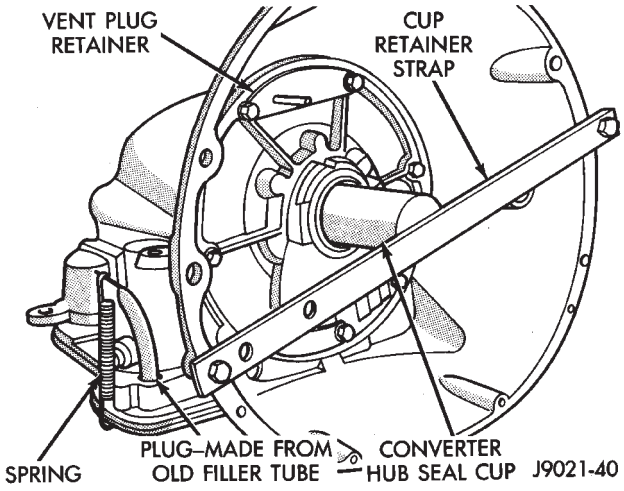

Fig. 15 Vent Plug And Hub Seal Cup Installation

CONVERTER HOUSING AREA LEAK CORRECTION

(1) Remove converter.

(2) Tighten front band adjusting screw until band is tight around clutch retainer. This prevents clutches from coming out when oil pump is removed.

(3) Remove oil pump and seal. Inspect pump housing drainback and vent holes for obstructions. Clear holes with solvent and wire.

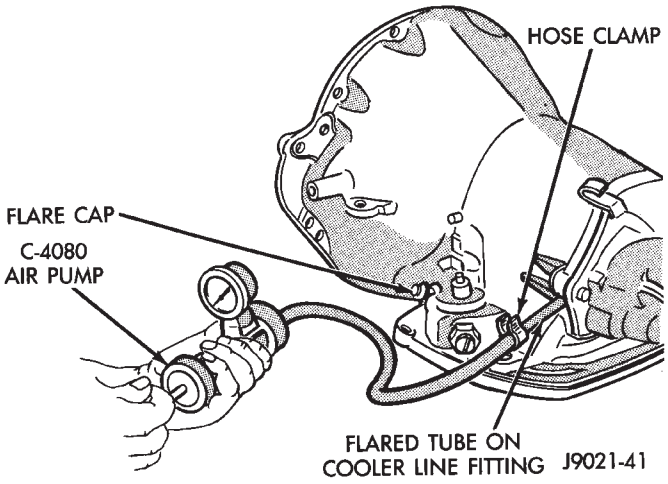

Fig. 16 Pressurizing Transmission

(4) Inspect pump bushing and converter hub. If bushing is scored, replace it. If converter hub is scored, either polish it with crocus cloth or replace converter if scoring is severe.

(5) Install new pump seal, O-ring, gasket, bushing. Replace oil pump if cracked, porous or damaged in any way.

(6) Loosen kickdown lever pin plug two turns. Apply Permatex No. 2 or equivalent to plug threads and tighten plug to 17 N·m (150 in-lbs) torque.

(7) Adjust front band.

(8) Lubricate pump seal and converter hub with transmission fluid or petroleum jelly and install converter.

(9) Install transmission.

(10) Install converter housing dust shield and lower vehicle.

DIAGNOSIS GUIDES AND CHARTS

The diagnosis charts provide additional reference for transmission and converter clutch diagnosis.

The hydraulic flow charts outline fluid flow and hydraulic circuitry. Circuit operation is provided for all gear ranges. Normal working pressures are also supplied for each of the various gear ranges.

TRANSMISSION DIAGNOSIS

CONDITION	POSSIBLE CAUSES	CORRECTION
HARSH ENGAGEMENT (FROM NEUTRAL TO DRIVE OR REVERSE). NOTE: The shift from neutral to reverse is normally quite firm. Hydraulic pressure at the rear servo can approach 300 psi in reverse gear. Do not confuse a firm engagement with a truly harsh engagement.	1. Engine idle speed too high. 2. Driver "riding" accelerator pedal during shift. 3. Throttle cable or linkage misadjusted. 4. Band adjustment needed. 5. Loose mounting bolts. 6. Worn or damaged U-joints. 7. Loose axle pinion nut. 8. Hydraulic pressure is incorrect. 9. Accumulator piston spring, or or seal worn or damaged. 10. Faulty converter clutch if equipped. 11. Clutch, band, or planetary component is damaged.	1. Check/adjust idle speed. 2. Advise owner/operator. 3. Adjust cable or linkage; setting is either too long or too short. 4. Adjust front/rear bands. 5. Check engine, transmission, propeller shaft, crossmember, and axle bolt torque; tighten loose bolts and replace missing bolts. 6. Remove propeller shaft and replace U-joints. 7. Replace nut and check pinion threads before installing new nut; replace pinion gear if threads are damaged. 8. Check pressures; remove, overhaul, or adjust valve body as needed; repair oil pump if necessary. 9. Remove valve body and replace piston, seal, or spring as needed. 10. Replace converter and flush cooler and lines before installing new converter. 11. Remove, disassemble, and repair transmission as necessary.
DELAYED ENGAGEMENT (FROM NEUTRAL TO DRIVE OR REVERSE)	1. Engine idle speed too low. 2. Low fluid level. 3. Gearshift cable or linkage out of adjustment. 4. Rear band out of adjustment. 5. Valve body filter plugged. 6. Oil pump gears worn or damaged or pump body or seal is damaged, allowing pump to take in air, causing fluid aeration. 7. Reaction shaft seal rings worn or broken. 8. Governor valve stuck or valve shaft is loose or damaged. 9. Low hydraulic pressure. 10. Clutch, band, or servo damage.	1. Adjust idle speed. 2. Correct level and check for leaks. 3. Adjust cable or linkage, or repair as needed. 4. Adjust band. 5. Replace fluid and filter. If oil pan and old fluid were full of clutch disc material and/or metal particles, overhaul will be necessary. 6. Remove transmission and replace oil pump. 7. Remove transmission, remove oil pump, and replace seal rings. 8. Remove and inspect governor components; replace worn or damaged parts. 9. Perform pressure test, remove transmission, and repair as needed. 10. Remove and disassemble transmission and repair as necessary.

TRANSMISSION DIAGNOSIS

CONDITION	POSSIBLE CAUSES	CORRECTION
DELAYED ENGAGEMENT AFTER VEHICLE HAS NOT BEEN DRIVEN FOR EXTENDED PERIOD	1. Fluid in torque converter drained back into transmission sump.	1. Normal condition that will not harm the converter or transmission. Converter will fill with fluid once shift lever is moved from park.
SHIFTS DELAYED OR ERRATIC (SHIFTS ALSO HARSH AT TIMES)	1. Low fluid level. 2. Throttle cable or linkage out of adjustment. 3. Throttle cable or linkage is binding. 4. Gearshift cable or linkage out of adjustment. 5. Fluid filter partially clogged. 6. Air in fluid due to overfill condition or air leakage into pump suction passages. 7. Clutch or servo problem. 8. Front band out of adjustment (may cause harsh 1-2 shift).	1. Correct fluid level and check for leaks. 2. Adjust linkage or cable as described in service section. 3. Disassemble, clean, and adjust linkage; replace linkage grommets if worn or cracked. Replace cable if seized. 4. Adjust as described in service section. 5. Replace filter. If filter and fluid contained clutch material or metal particles, overhaul is necessary. 6. Drain fluid to correct level if overfilled. If fluid is highly aerated (full of bubbles and foamy), oil pump gasket or seal may have failed, or pump body is porous or cracked. 7. Remove valve body and air test clutch, band and servo operation; disassemble and repair transmission as needed. 8. Adjust band.
NO REVERSE (D RANGES OK)	1. Gearshift cable or linkage out of adjustment or damaged. 2. Rear band out of adjustment. 3. Valve body malfunction (stuck/ damaged manual valve, regulator valve, or check ball). 4. Rear servo or front clutch malfunction.	1. Repair or replace parts as needed. 2. Adjust band. 3. Remove and service valve body; replace valve body if any valves or valve bores are worn or damaged. 4. Remove and disassemble transmission; replace worn, damaged servo and clutch parts as necessary.
HAS FIRST-REVERSE ONLY (NO 1-2 OR 2-3 UPSHIFT)	1. Governor valve, shaft, weights, or body damaged.	1. Remove governor assembly and repair as necessary.
NO DRIVE RANGE (REVERSE OK)	1. Gearshift cable or linkage loose, damaged, out of adjustment. 2. Low fluid level. 3. Valve body malfunction (manual valve or shaft damaged or 1-2 shift valve stuck). 4. Rear clutch failure.	1. Repair or replace cable or linkage components. 2. Correct fluid level and check for leaks. 3. Remove and disassemble valve body; replace as assembly if any valves or bores are damaged. 4. Remove and disassemble transmission and rear clutch; repair/replace worn, damaged parts as needed.

J9521-133

TRANSMISSION DIAGNOSIS

CONDITION	POSSIBLE CAUSES	CORRECTION
NO DRIVE RANGE (REVERSE OK) - CONT.	5. Transmission overrunning clutch failure. 6. Input shaft seal rings worn or damaged.	5. Remove and disassemble transmission; replace overrunning clutch. 6. Remove and disassemble transmission; replace seal rings and any other worn or damaged parts.
NO DRIVE OR REVERSE (VEHICLE) WILL NOT MOVE	1. Low fluid level. 2. Gearshift cable or linkage loose, damaged, or misassembled. 3. Failure of driveline component, such as U-joint, axle shaft, case component, etc. 4. Low fluid pressure due to worn or damaged oil pump. 5. Transmission internal component damaged. 6. Valve body malfunction (seized valve, damaged manual lever, valve body screws loose or overtightened causing distortion and bind).	1. Add fluid and check for leaks if drive is restored. 2. Adjust, and reassemble linkage as needed; replace worn, damaged cable. 3. Perform preliminary inspection procedure for vehicle that will not move; refer to procedure in diagnosis section. 4. Perform pressure test to confirm low pressure; replace pump body and/or gears if necessary. 5. Remove and disassemble transmission; repair or replace failed components as needed. 6. Remove, disassemble, and inspect valve body; replace valve body (as assembly) if any valve or bore is damaged; clean and reassemble correctly if all parts are in good condition.
MOVES IN 2ND OR 3RD GEAR, ABRUPTLY DOWNSHIFTS TO LOW	1. Governor valve sticking. 2. Valve body malfunction.	1. Remove, clean, and inspect; replace faulty parts. 2. Remove, clean, and inspect; look for stuck 1-2 valve or governor plug.
SLIPS IN LOW GEAR ONLY, BUT NOT IN 1 POSITION	1. Overrunning clutch faulty, not holding.	1. Replace overrunning clutch.
SLIPS IN FORWARD DRIVE RANGES	1. Low fluid level. 2. Air in fluid (fluid is foamy, full of bubbles), shifts are spongy, caused by air getting into pump suction passages. 3. Gearshift or throttle linkage/cable out of adjustment. 4. Low hydraulic pressures due to worn pump, incorrect control pressure adjustments, valve body warpage or malfunction, sticking governor, leaking seal rings, clutch seals leaking, servo leaks, clogged filter, or cooler lines. 5. Accumulator piston cracked, spring broken or seal worn. 6. Clutch or servo malfunction, leaking seal or worn plates. 7. Overrunning clutch worn, not holding (slips in 1 only).	1. Add fluid and check for leaks. 2. Check for bad pump gasket or seals, dirt between pump halves, and loose pump bolts or defective O-ring at filler tube. 3. Adjust linkage/cable. 4. Perform hydraulic and air pressure tests to determine cause. 5. Inspect and repair as necessary. 6. Air pressure check clutch-servo operation and repair as required. 7. Replace clutch.

J9521-134

TRANSMISSION DIAGNOSIS

CONDITION	POSSIBLE CAUSES	CORRECTION
SLIPS IN REVERSE ONLY	1. Low fluid level.	1. Add fluid and check for leaks.
	2. Aerated fluid; see Slips in Forward Drive Ranges.	2. See Slips in Forward Drive Ranges.
	3. Gearshift linkage or cable out of adjustment.	3. Adjust linkage/cable.
	4. Rear band out of adjustment.	4. Adjust band.
	5. Hydraulic pressure too low due to worn pump, worn seal rings, clutch or servo seal leakage.	5. Perform hydraulic pressure tests to determine cause.
	6. Worn front clutch, leaking rear servo, or worn rear band.	6. Air pressure check clutch-servo operation and repair as required.
	7. B and-linkage binding.	7. Inspect and repair as required.
NO KICKDOWN OR NORMAL DOWNSHIFT	1. Incorrect throttle cable adjustment.	1. Adjust cable.
	2. Incorrect gear shift linkage/cable adjustment.	2. Adjust linkage/cable.
	3. Front band out of adjustment.	3. Adjust band.
	4. Hydraulic pressures too high or too low due to sticking governor, valve body malfunction, or incorrect hydraulic control pressure adjustments.	4. Perform hydraulic pressure tests to determine cause and repair as required. Correct valve body pressure adjustments as required.
	5. Front servo, band, or linkage malfunction.	5. Air pressure test operation and repair as necessary.
	6. Clutch or servo malfunction.	6. Air pressure test operation and repair as necessary.
STUCK IN LOW GEAR (WILL NOT UPSHIFT)	1. Gearshift or throttle linkage or cable of adjustment.	1. Adjust linkage. Repair linkage if worn or damaged. Replace cable if damaged.
	2. Front band out of adjustment.	2. Adjust band.
	3. Governor valve stuck closed; loose output shaft support or governor housing bolts, worn pump, leaking seal rings, or valve body problem (i.e., stuck 1-2 shift valve or governor plug).	3. Check line and governor pressures to determine cause; correct as required.
	4. Clutch or servo malfunction.	4. Air pressure check operation of clutches and bands; repair faulty component.

TRANSMISSION DIAGNOSIS

CONDITION	POSSIBLE CAUSES	CORRECTION
NO LOW GEAR (MOVES IN 2ND OR 3RD GEAR ONLY)	1. Governor valve sticking in partially open position.	1. Remove governor; clean, inspect, and repair as required.
	2. Valve body malfunction.	2. Remove, clean, and inspect. Look for sticking 1-2 valve, 2-3 valve, governor plug, or broken springs.
	3. Front servo piston cocked in bore.	3. Inspect servo and repair as required.
	4. Front band linkage malfunction.	4. Inspect linkage and look for bind in linkage.
	5. Incorrect throttle or gearshift linkage or cable adjustment.	5. Adjust linkage or cable.
CREEPS IN NEUTRAL	1. Gearshift linkage or cable out of adjustment.	1. Adjust linkage or cable.
	2. Valve body malfunction (warped body, cross leakage).	2. Perform hydraulic pressure test to determine cause and repair as required.
	3. Transmission clutch dragging.	3. Air pressure check operation of clutches and repair as required.
	4. Converter clutch dragging.	4. Replace converter.
DRAGS OR LOCKS UP	1. Front or rear band out of adjustment.	1. Adjust bands.
	2. Servo band or linkage malfunction (i.e., binding linkage, warped band, servo piston stuck.	2. Air pressure check servo operation and repair as required.
	3. Dragging clutch (does not release fully).	3. Air pressure check clutch operation and repair as required.
	4. Broken or seized planetary gears.	4. Remove, inspect, and repair as required (look for debris in oil pan).
	5. Overrunning clutch worn, broken, or seized.	5. Remove and inspect clutch, repair as required.
GROWLING, GRATING, OR SCRAPING NOISES	1. Planetary gear set broken or seized.	1. Check for debris in oil pan and repair as required.
	2. Overrunning clutch worn, seized, or broken.	2. Inspect and check for debris in oil pan; repair as required.
	3. Oil pump components scored, binding, or broken.	3. Remove, inspect, and repair as required.
	4. Output shaft bearing or bushing damaged.	4. Remove, inspect, and repair as required.
	5. Faulty clutch operation.	5. Perform air pressure check and repair as required.
	6. Governor support (park gear) binding or seal rings broken.	6. Remove, inspect, and repair as required.
	7. Front and rear bands out of adjustment.	7. Adjust bands.
BUZZING NOISE	1. Low fluid level.	1. Add fluid and check for leaks.
	2. Air being drawn into pump suction passages.	2. Check pump for porous casting, scores on mating surfaces, and excess rotor clearance; repair as required.
	3. Overrunning clutch damaged.	3. Replace clutch.

J9521-136

TRANSMISSION DIAGNOSIS

CONDITION	POSSIBLE CAUSES	CORRECTION
BUZZING NOISE - CONT.	4. Valve body misassembled, bolts loose, weak spring, or mis-positioned valve or check ball.	4. Remove, disassemble, inspect valve body; reassemble correctly if necessary; replace assembly if valves or springs are damaged.
OIL COMES OUT FILLER TUBE	1. Transmission overfilled.	1. Drain fluid to correct level; remove neutral switch and drain through switch hole with suction gun.
	2. Breather vent in oil pump blocked.	2. Inspect and clear blockage.
	3. Fluid cooler or cooler lines plugged.	3. Flush cooler and lines.
	4. Air in fluid (aerated).	4. See "Slips in Forward Drive Ranges."
	5. Oil filter clogged.	5. Replace filter; determine the reason for clogged condition and repair.
	6. Rear servo piston or seal failure.	6. Check hydraulic pressure at servo in reverse (will register low or fluctuate rapidly).
	7. Valve body switch valve sticking.	7. Remove and clean valve.
OIL LEAKS (ITEMS LISTED REPRESENT POSSIBLE LEAK POINTS AND SHOULD ALL BE CHECKED).	1. Speedometer adapter.	1. Replace both adapter seals.
	2. Pan gasket.	2. Tighten pan screws to 150 inch-pounds; if leaks persist, replace gasket, **do not overtighten screws.**
	3. Filler tube (where tube enters case).	3. Replace O-ring seal.
	4. Fluid lines and fittings.	4. Tighten fittings; if leaks persist, replace fittings and lines if necessary.
	5. Valve body manual lever shaft seal.	5. Replace shaft seal.
	6. Pressure port plug loose.	6. Tighten to correct torque; replace plug if leak persists.
	7. Rear bearing access plate.	7. Replace gasket.
	8. Gasket damaged or bolts are loose.	8. Replace bolts or gasket or tighten bolts.
	9. Adapter/extension gasket damaged.	9. Replace gasket.
	10. Neutral switch.	10. Replace switch and gasket.
	11. Converter housing area.	11. Check for leaks at seal caused by worn seal or burr on converter hub (cutting seal), worn bushing, missing oil return, oil in front pump housing, or hole plugged. Check for leaks past O-ring seal on pump, or past pump-to-case bolts; pump housing porous, oil coming out vent due to overfill or leak past front band shaft access plug.
	12. Cooler line fittings and hoses.	12. Replace fittings and hoses.
	13. Pump seal.	13. Replace seal.
	14. Torque converter.	14. Replace converter.

TRANSMISSION DIAGNOSIS

CONDITION	POSSIBLE CAUSES	CORRECTION
OVERHEAT DURING COMMERCIAL OPERATION OR WHILE TRAILER TOWING (FLUID DARK AND BURNEDWITH SOME SLUDGE FORMATION)	1. Vehicle not properly equipped for trailer towing or commercial use.	1. Be sure vehicle is equipped with recommended optional components (i.e., HD springs, transmission, axle, larger CID engine, auxiliary cooler, correct axle ratio, etc.). If vehicle is not so equipped, it should not be used for severe service operation.
	2. Vehicle not equipped with auxiliary fluid cooler.	2. Drain fluid, change filter, and install auxiliary cooler.
	3. Extensive idling time or operation in heavy traffic in hot weather.	3. Cut down on idling time; shift into neutral every so often and run engine at 1000 rpm to help circulate fluid through cooler.
	4. Tow vehicle overloaded (exceeding vehicle tow capacity).	4. Be sure vehicle is properly equipped to handle load; do not tow Class III-type loads with a vehicle that is only rated for Class I or II operation.
	5. Air flow to auxiliary cooler blocked by snow plow, front mounted spare tire, bug screen, or similar item.	5. Remove or reposition item causing air flow blockage.
OVERHEAT DURING NORMAL OPERATION (FLUID DISCOLORED, SMELLS BURNED)	1. Low fluid level.	1. Add fluid and check for leaks.
	2. Fluid cooler, lines blocked, or cooler cracked (oil in engine coolant).	2. Flush cooler and lines and replace radiator if transmission fluid has entered coolant.
	3. Switch valve sticking.	3. Remove, disassemble, clean valve body.
	4. Clutch pack clearance incorrect (too tight).	4. Check and correct as required.
	5. Bands too tight.	5. Adjust bands.
NO START IN PARK OR NEUTRAL	1. Gearshift linkage or cable out of adjustment.	1. Adjust linkage or cable.
	2. Neutral switch wire broken or open.	2. Check continuity with test lamp; repair as required.
	3. Faulty park/neutral position switch.	3. Refer to service section for test and replacement procedure.
	4. Valve body manual lever assembly bent, worn, broken, or not aligned with switch.	4. Inspect lever assembly and replace if damaged.
SLUGGISH ACCELERATION AT LOW SPEEDS OR REQUIRES EXCESSIVE THROTTLE OPENING TO MAINTAIN HIGHWAY SPEEDS	1. Poor engine performance.	1. Check engine and repair as required.
	2. Gearshift or throttle linkage/cable out of adjustment.	2. Adjust linkage/cable.
	3. Transmission clutches slipping.	3. Perform stall test and repair as required.
	4. Overrunning clutch in converter not holding.	4. Perform stall test and repair converter if clutch has failed.
	5. Converter overrunning clutch stuck.	5. Replace converter.

TRANSMISSION DIAGNOSIS

CONDITION	POSSIBLE CAUSES	CORRECTION
FLUID CONTAMINATED (DISCOLORED, FULL OF SLUDGE AND/OR METAL AND FRICTION MATERIAL PARTICULAR)	1. If contamination occurred shortly after overhaul, fluid cooler and lines were not flushed and flow tested. This is especially true when original overhaul was to correct a problem that generated a large amount of debris, such as a gear failure or a clutch pack failure. Note: Flushing the cooler and lines is mandatory after a failure of the converter lockup clutch.	1. If contamination is severe, cooler flushing, converter replacement, and another overhaul may be necessary; particularly so if shift problems were also present.
	2. Incorrect fluid used in transmission.	2. If transmission is operating properly, drain fluid, reverse flush cooler and lines, and change fluid and filter. However, if shift problem has developed, converter replacement and transmission overhaul may be required.
	3. Main cooler in radiator is cracked, allowing engine coolant to enter transmission.	3. Replace radiator (and cooler) and flush lines. If problem was diagnosed early enough, fluid and filter change may only be necessary. If contamination period was prolonged, overhaul and converter replacement may be required.
	4. Severe overload results in overheat, fluid breakdown, and accelerated wear, especially in high ambient temperatures. Most frequent causes are: • Vehicle is not properly equipped for heavy duty service. • Tow vehicle and boat or trailer are both overloaded. • Trailer or boat are too large for tow vehicle (load exceeds rated capacity of tow vehicle).	4. Repair transmission, flush cooler, and lines. Replace converter if necessary. Install auxiliary cooler if needed. Also install HD cooling system if needed. If tow vehicle and unit being towed are both overloaded, the only repair is to reduce the load to rated limits. However, if trailer or boat is too large for tow vehicle, the only option is for the owner to move up to properly-equipped and load-rated tow vehicle.

TORQUE CONVERTER DIAGNOSIS

CONDITION	POSSIBLE CAUSES	CORRECTION
CONVERTER CLUTCH WILL NOT ENGAGE	1. Circuit fuse open.	1. Replace fuse. Check for circuit short if fuse blows again.
	2. Solenoid or relay wiring disconnected, open, shorted.	2. Repair wiring or replace harness.
	3. Clutch solenoid or relay malfunction (short, open, stuck).	3. Replace as needed.
	4. Sticking converter clutch or switch valve.	4. Remove and disassemble valve body. Clean and free-up valves.
	5. Clutch module tube loose, module cover not secured, or module components misassembled.	5. Remove valve body. Reposition tube, secure cover, or reassemble components.
	6. Converter clutch failure, turbine hub leak, or overrunning clutch (in converter) failed.	6. Replace torque converter.
	7. Oil pump fault (gears worn, seal leaks, housing damaged or loose, reaction shaft seal rings worn.	7. Remove and rebuild pump as needed.
	8. Input shaft seal rings worn, damaged.	8. Remove and repair or replace as needed.
CONVERTER CLUTCH WILL NOT DISENGAGE	1. Converter clutch or switch valve sticking.	1. Remove, disassemble valve body. Clean and free-up valves.
	2. Valve body fault (loose screws causing cross leakage, misassembled clutch module parts, etc.).	2. Remove and service valve body. Replace as assembly if valves, bores, plugs, housings, transfer plate, etc., are damaged.
CONVERTER CLUTCH STAYS ENGAGED AT TOO LOW A SPEED	1. Converter solenoid fault (sticking, check ball).	1. Replace solenoid.
	2. Clutch module fault.	2. Remove valve body and examine module. Check valves, springs, connecting tube, and end cover for misassembly, damage, being loose.
	3. Valve body fault.	3. Remove and service valve body. Look for stuck clutch and switch valve, loose housing screws, clutch solenoid wire damage, etc.
VIBRATION OR SHUDDER **DURING** CONVERTER CLUTCH ENGAGEMENT	1. Low fluid level.	1. Top off level and check for leaks.
	2. Incorrect fluid.	2. Drain and refill with MOPAR ATF Plus type 7176.
	3. Engine problem: (a) ignition fault (b) fuel system fault.	3. Diagnose with DRB scan tool and correct as needed.
	4. Torque converter fault: (a) out of balance (b) clutch failure (c) turbine hub seal leak.	4. Replace converter.

J9521-143

TORQUE CONVERTER DIAGNOSIS

CONDITION	POSSIBLE CAUSES	CORRECTION
VIBRATION OR SHUDDER **DURING** CONVERTER CLUTCH ENGAGEMENT - CONT.	5. Oil pump fault: (a) leaking seals, seal rings (b) pump gears worn (c) pump bolts loose (d) reaction shaft/pump bushing damage (e) vent damaged.	5. Remove and overhaul pump.
	6. Valve body malfunction.	6. Remove and service valve body. Look for loose screws, misassembled parts, stuck valves, etc.
SHUDDER **AFTER** CLUTCH ENGAGEMENT	1. Engine fuel or ignition problem.	1. Diagnose with scan tool and correct as needed.
	2. Exhaust system problem (pipes grounding against chassis, or restrictions in converter, muffler, or pipe).	2. Realign grounded pipes. Replace restricted parts.
	3. Incorrect fluid.	3. Drain and refill with MOPAR ATF Plus, type 7176.
	4. Throttle valve cable out of adjustment.	4. Adjust cable.
	5. Low fluid level.	5. Top off fluid and check for leak.
	6. Converter clutch failure.	6. Replace torque converter.
	7. Restriction in cooler system.	7. Reverse flush system. Replace radiator, if cooler is restricted.
	8. Valve body malfunction.	8. Remove and service valve body. Look for failed solenoid, sticking valves, loose attaching screws, misassembled parts.
	9. Oil pump pressure low.	9. Remove and overhaul pump. Replace bushings, seals, seal rings, and gears as needed.
CONVERTER CLUTCH CHATTERS **DURING** ENGAGEMENT WHEN COLD	1. Low fluid level.	1. Top off level and check for leaks.
	2. Incorrect fluid.	2. Drain and refill with MOPAR ATF Plus type 7176.
	3. Torque converter fault: (a) out of balance (b) converter clutch failed (c) turbine hub seal leak.	3. Replace converter.
VIBRATION **AFTER** CONVERTER CLUTCH ENGAGEMENT	1. Exhaust pipes grounding against body.	1. Realign exhaust components.
	2. Engine fuel or ignition problem.	2. Diagnose with DRB scan tool and repair as needed.
	3. Throttle valve cable needs adjustment.	3. Adjust cable.
	4. Converter balance problem or internal damage.	4. Replace converter.

TORQUE CONVERTER DIAGNOSIS

CONDITION	POSSIBLE CAUSES	CORRECTION
CONVERTER VIBRATION WHEN ENGINE IS "REVVED" IN NEUTRAL	1. Converter out of balance.	1. Replace converter.
LOCKS OR DRAGS IN LOW OR SECOND	1. Oil cooler, cooler lines, or fittings are plugged.	1. Reverse flush lines and fittings. Replace radiator if cooler is completely plugged. Overhaul transmission and replace converter if large quantities of clutch material and/or metal particles are cause of plugging.
	2. Oil pump fault.	2. Remove and overhaul pump. Look for worn seals or reaction shaft seal rings, pump body cracks, loose bolts, worn gears, bushings.
	3. Valve body fault.	3. Remove and service valve body. Look for loose or misassembled parts, failed solenoid, stuck valves, etc.
STALLS, OR IS SLUGGISH IN REVERSE	1. Plugged cooler lines, fittings, or cooler.	1. Reverse flush lines and cooler. Replace radiator if cooler is completely plugged. Overhaul transmission and replace converter if plugging is caused by large quantities of clutch material and/or metal particles.
	2. Oil pump fault.	2. Remove and overhaul pump. Look for worn seals, or reaction shaft seal rings, pump body cracks, loose bolts, worn gears or bushings.
	3. Valve body malfunction.	3. Remove and service valve body. Look for stuck converter and switch valves, loose screws, misassembled parts, failed solenoid, etc.
FLUID COMES OUT FILL TUBE (OVERHEATING)	1. Vehicle not properly equipped for severe service operation such as trailer towing.	1. Vehicle must be equipped with HD cooling system, auxiliary cooler, and correct engine/transmission/axle ratio combination.
	2. Air flow through radiator and cooler partially blocked by plow, front mount spare tire, protective screen, etc.	2. Move equipment as needed to restore
	3. Transmission overfilled.	3. Remove excess fluid at cooler line or with suction tube inserted in filler tube.
	4. Cooler lines, fittings, or cooler plugged.	4. Reverse flush cooler lines and fittings.
	5. Transmission vent restricted.	5. Remove transmission and either open the vent or replace the pump body if the vent cannot be repaired.
	6. Stuck switch valve.	6. Remove valve body and free up the valve.

HYDRAULIC FLOW IN PARK AND NEUTRAL

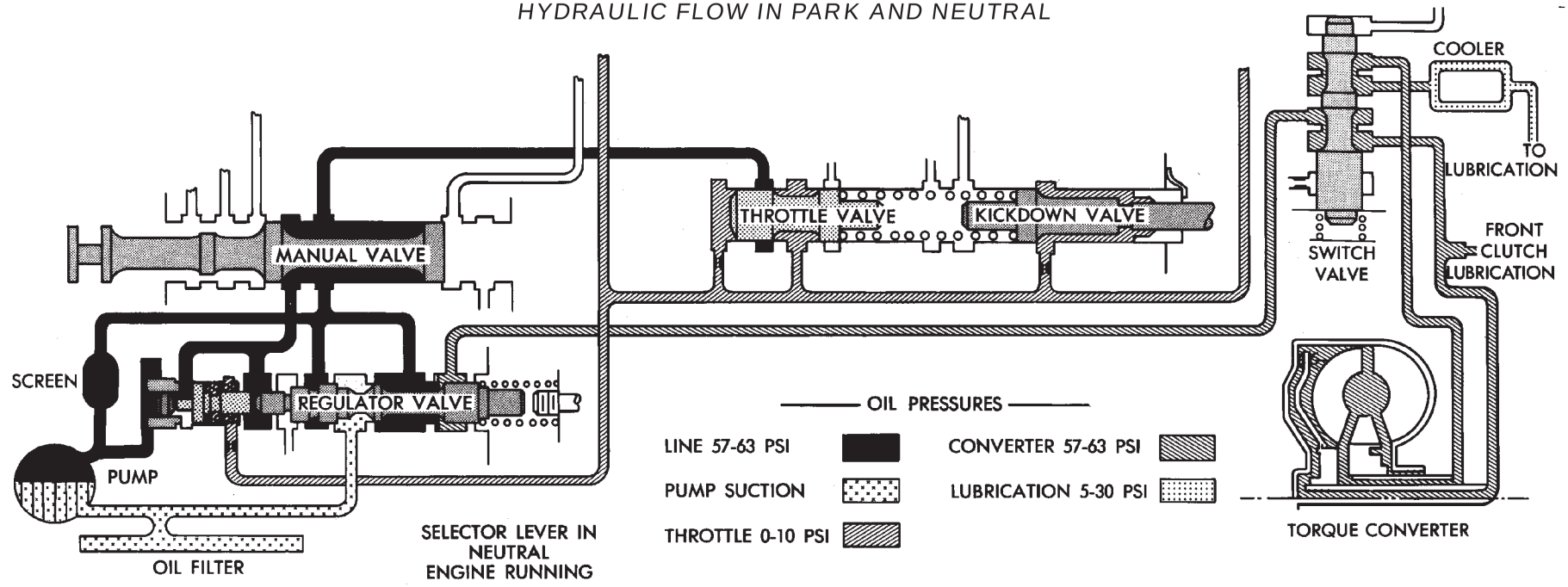

SELECTOR LEVER IN NEUTRAL ENGINE RUNNING

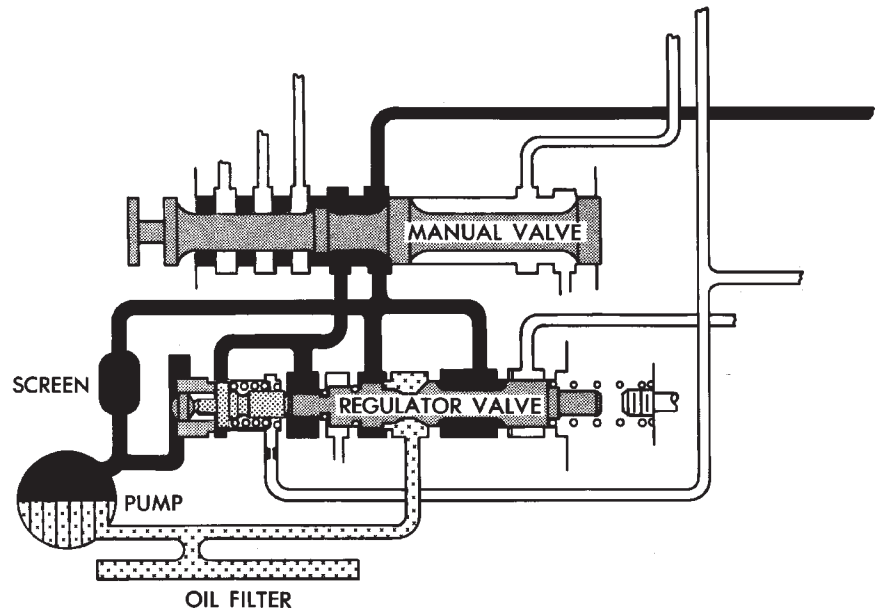

SELECTOR LEVER IN PARK ENGINE RUNNING

J9021-160

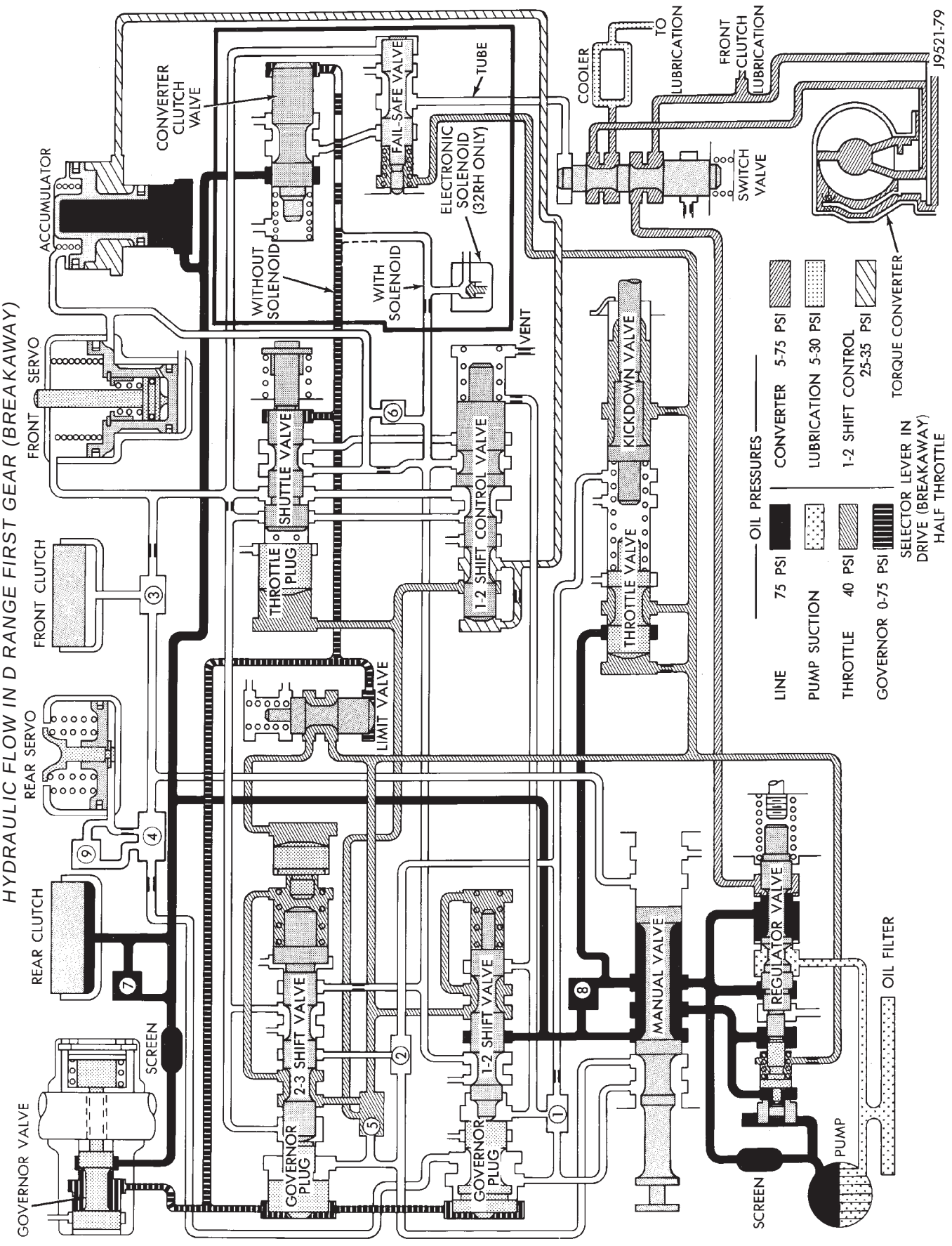
HYDRAULIC FLOW IN D RANGE FIRST GEAR (BREAKAWAY)
GOVERNOR VALVE
SCREEN
REAR CLUTCH
REAR SERVO
FRONT CLUTCH
FRONT SERVO
ACCUMULATOR
CONVERTER CLUTCH VALVE
WITHOUT SOLENOID
WITH SOLENOID
FAIL-SAFE VALVE
TUBE
ELECTRONIC SOLENOID (32RH ONLY)
VENT
SHUTTLE VALVE
THROTTLE PLUG
1-2 SHIFT CONTROL VALVE
KICKDOWN VALVE
THROTTLE VALVE
LIMIT VALVE
2-3 SHIFT VALVE
1-2 SHIFT VALVE
GOVERNOR PLUG
GOVERNOR PLUG
MANUAL VALVE
REGULATOR VALVE
SCREEN
PUMP
OIL FILTER
COOLER
TO LUBRICATION
FRONT CLUTCH LUBRICATION
SWITCH VALVE
TORQUE CONVERTER
J9521-79
OIL PRESSURES
LINE 75 PSI
CONVERTER 5-75 PSI
PUMP SUCTION
LUBRICATION 5-30 PSI
THROTTLE 40 PSI
1-2 SHIFT CONTROL 25-35 PSI
GOVERNOR 0-75 PSI
SELECTOR LEVER IN DRIVE (BREAKAWAY) HALF THROTTLE

HYDRAULIC FLOW IN D RANGE SECOND GEAR

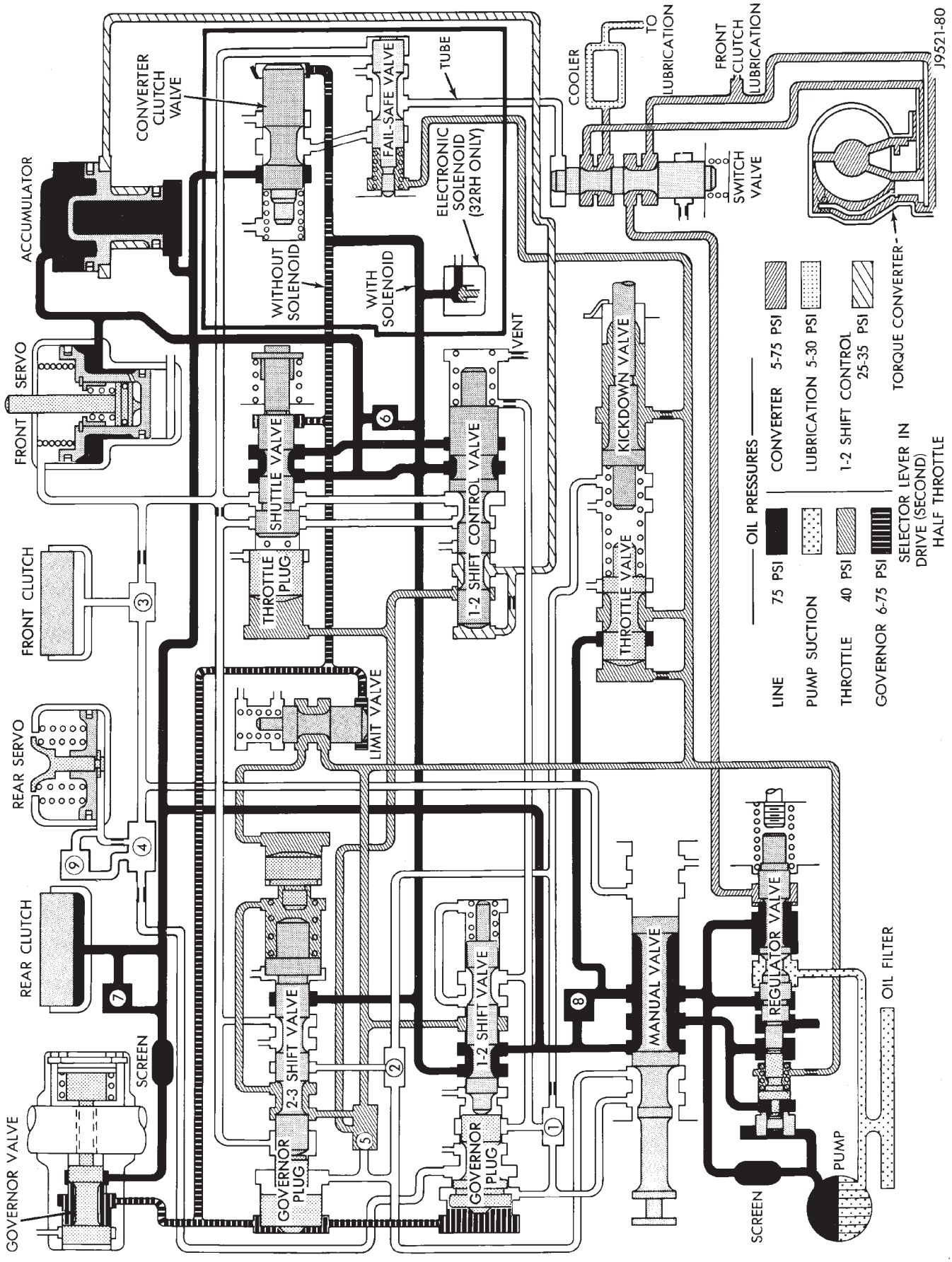

HYDRAULIC FLOW IN D RANGE THIRD GEAR

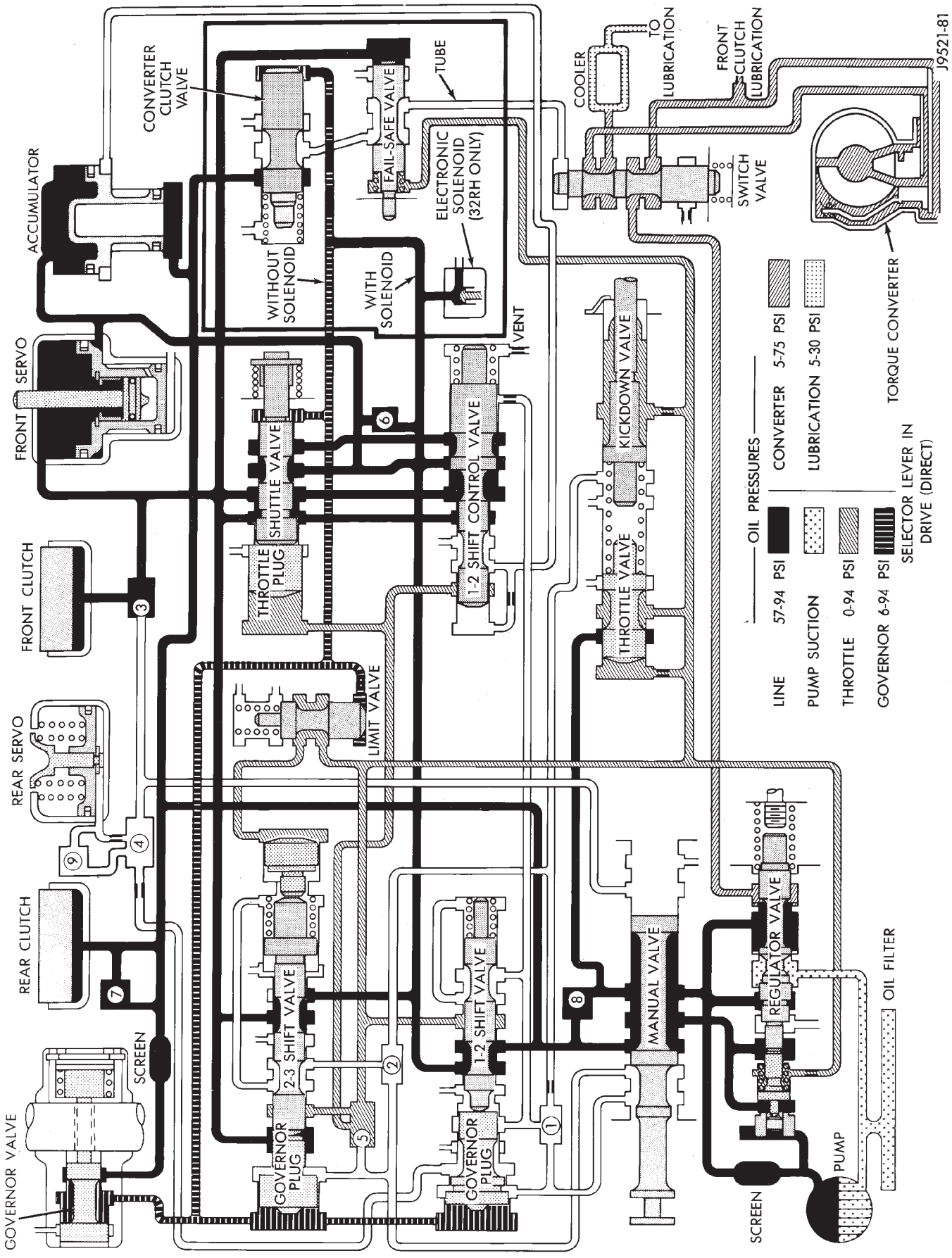

HYDRAULIC FLOW IN THIRD GEAR (CONVERTER CLUTCH ENGAGED)

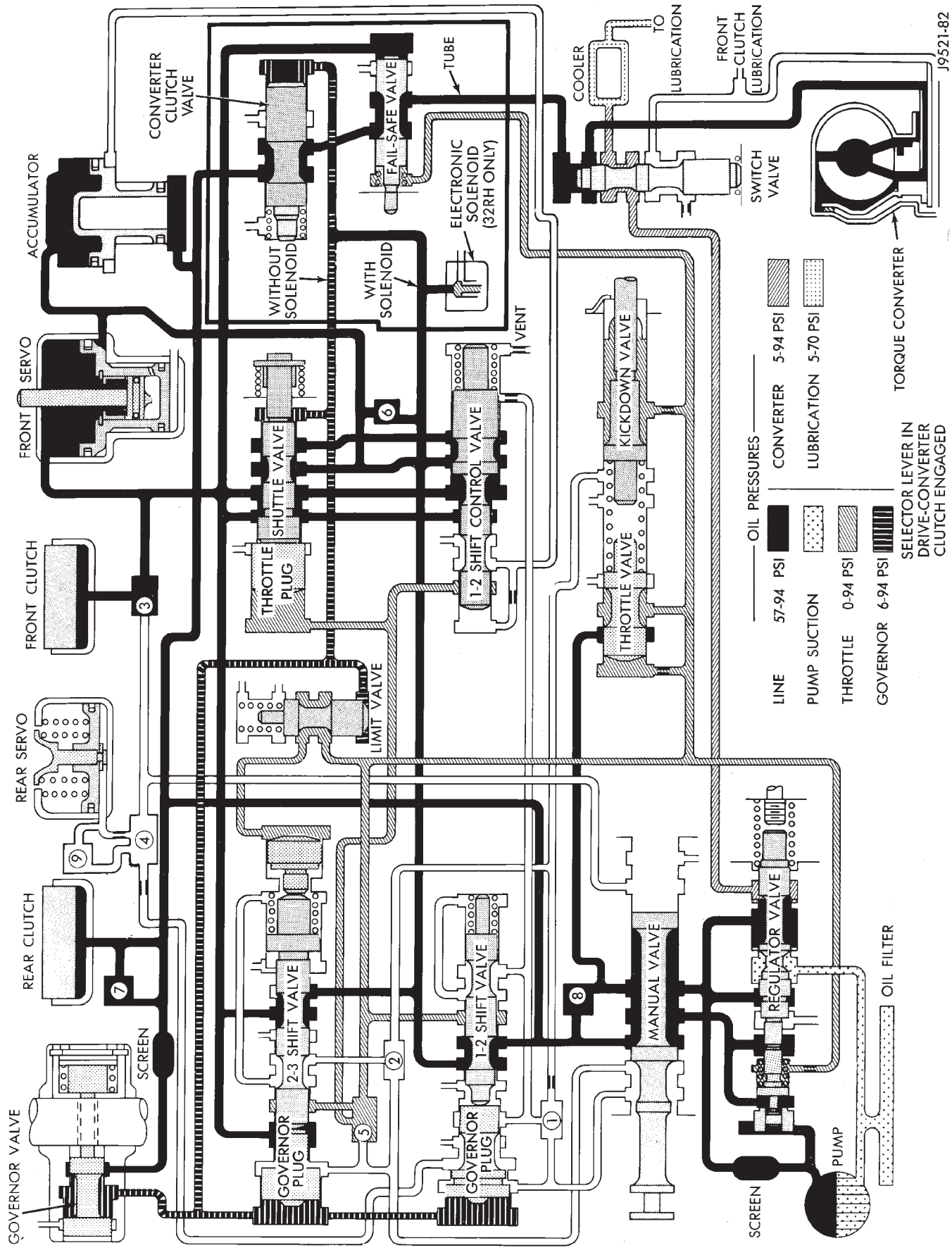

HYDRAULIC FLOW DURING PART THROTTLE 3-2 DOWNSHIFT

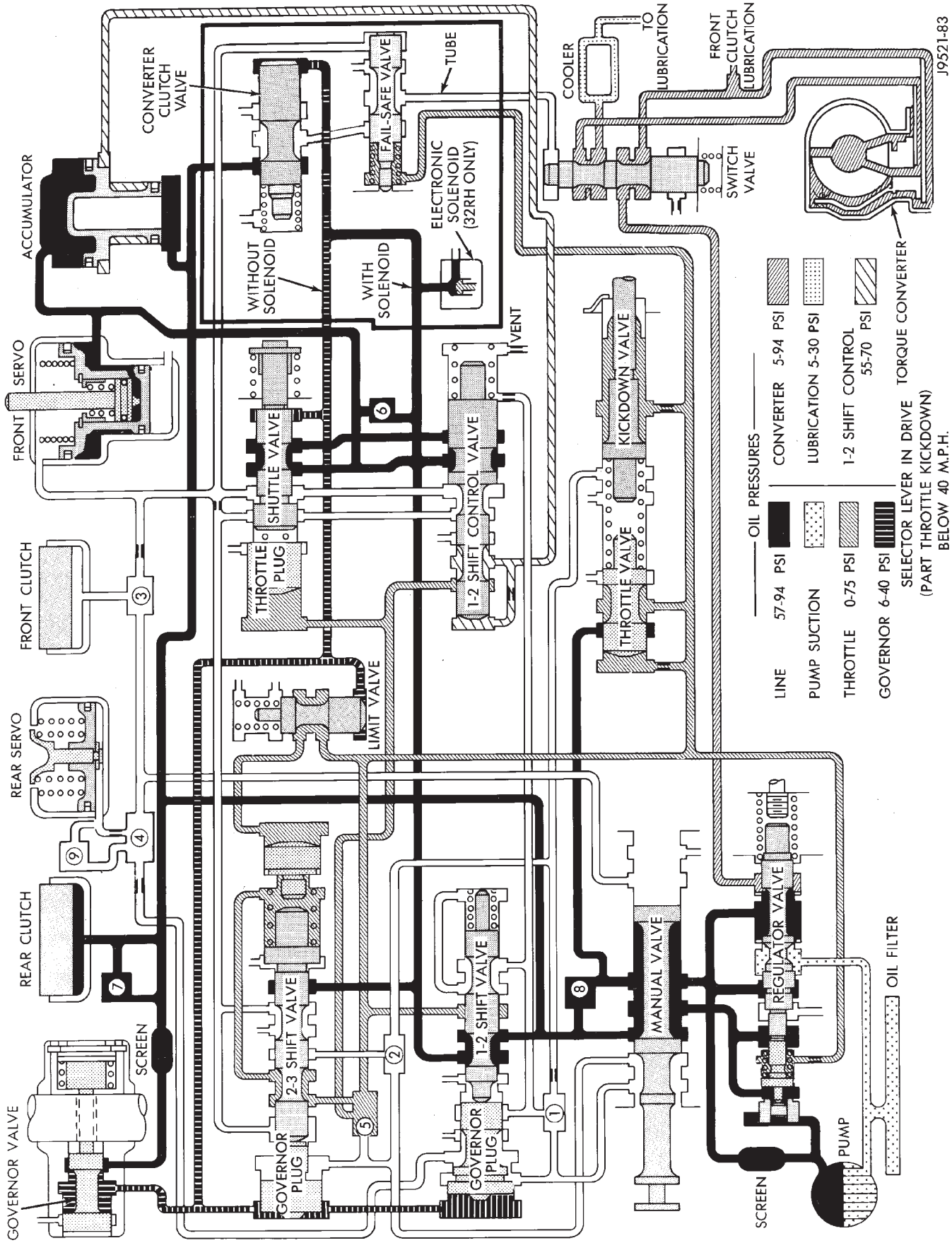

HYDRAULIC FLOW DURING FULL THROTTLE 3-2 DOWNSHIFT

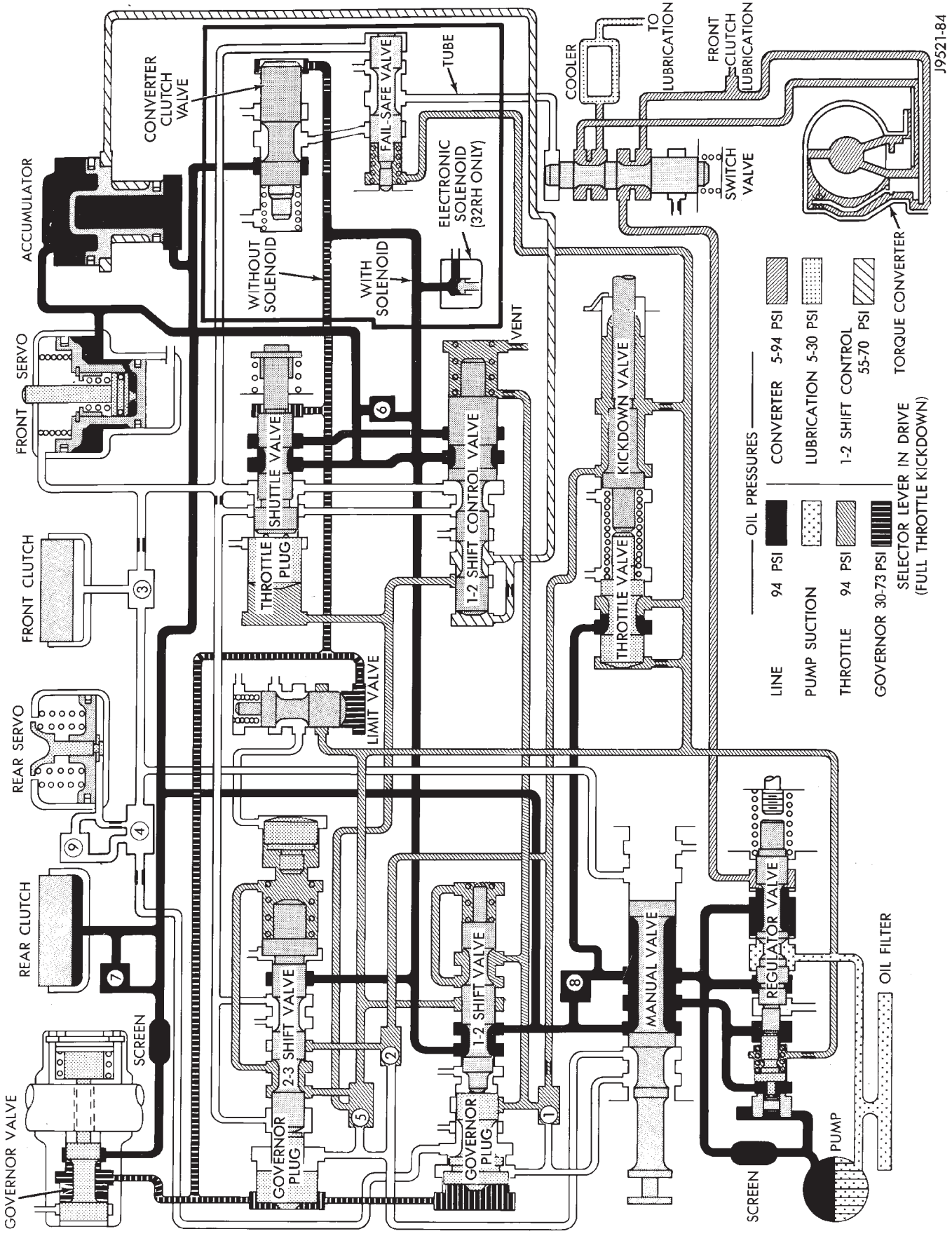

HYDRAULIC FLOW IN MANUAL SECOND (2) RANGE

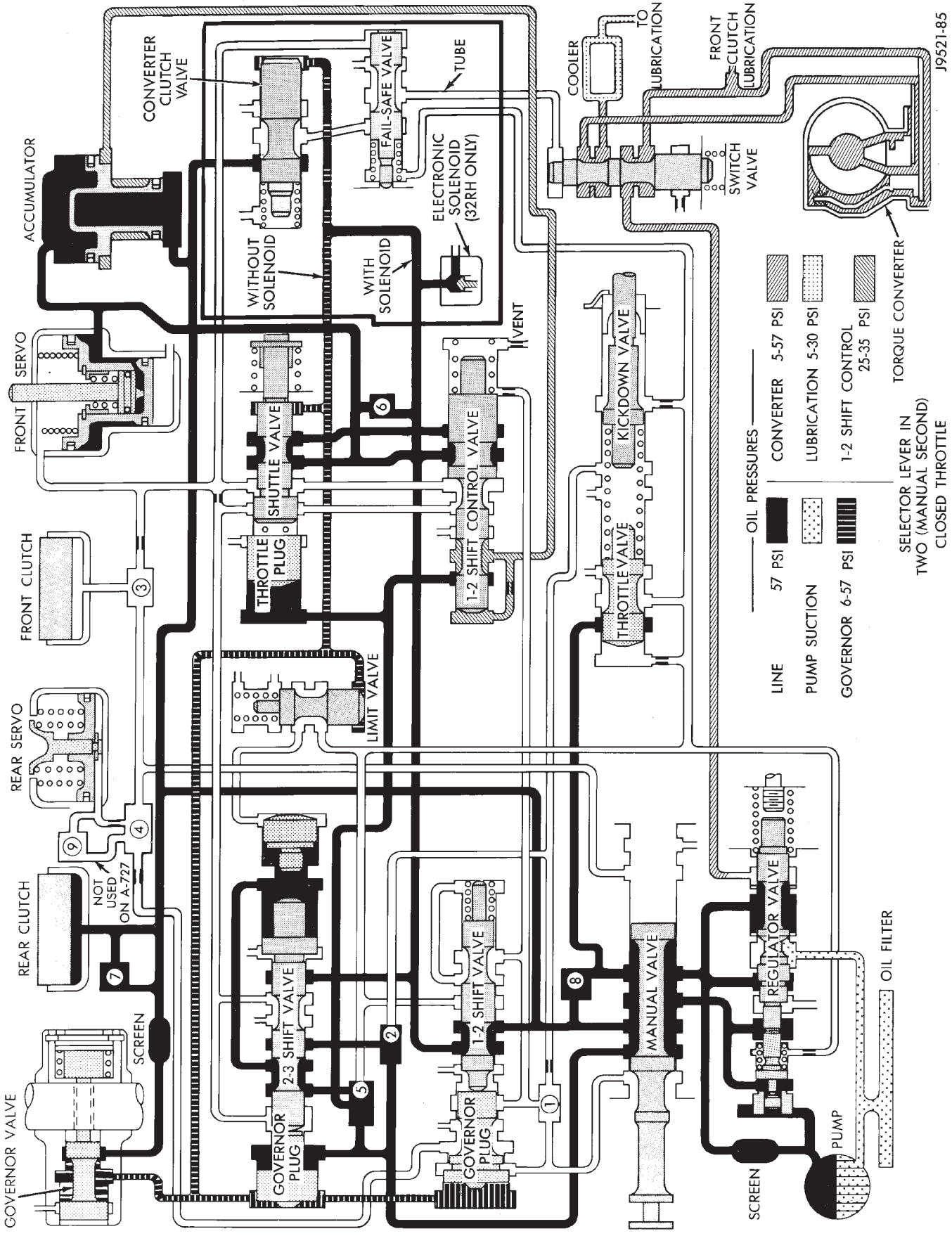

HYDRAULIC FLOW IN MANUAL FIRST GEAR (1) POSITION

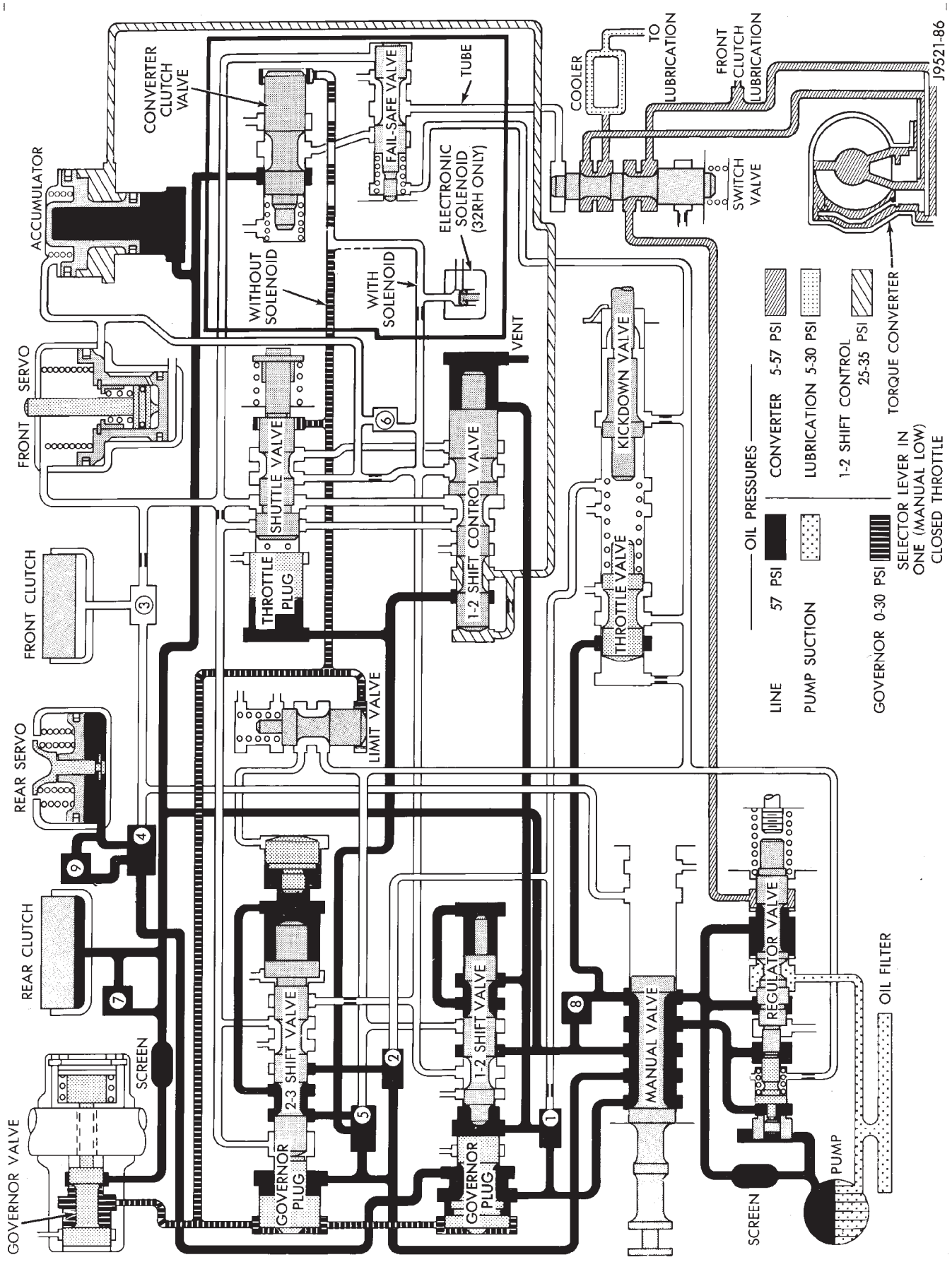

HYDRAULIC FLOW IN REVERSE

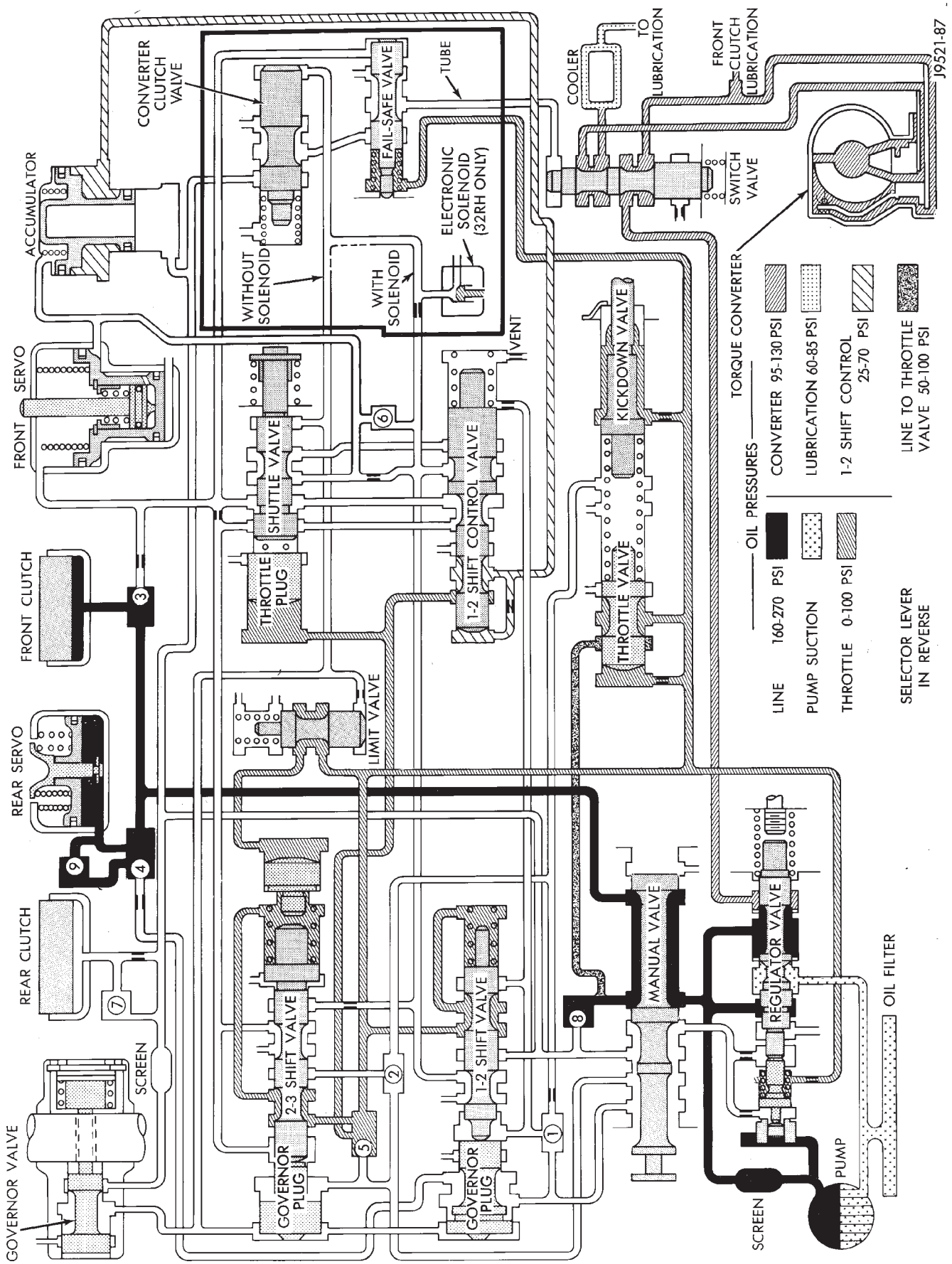

30RH/32RH IN-VEHICLE SERVICE

INDEX

	page
Converter Drainback Check Valve Service	113
Fluid and Filter Replacement	99
Fluid Level Check	99
Front Band Adjustment	102
Governor and Park Gear Service	105
Oil Filter Replacement	103
Park Interlock Cable Adjustment (XJ)	101
Park Lock Component Replacement	108
Park/Neutral Position Switch Service	109
Rear Band Adjustment	103
Recommended Fluid	99
Refilling After Overhaul or Fluid/Filter Change	100
Shift Cable Adjustment (XJ)	100
Shift Linkage Adjustment (YJ)	100
Speedometer Service	109
Throttle Valve Cable Adjustment (XJ/YJ)	101
Transmission Cooler Flow Testing	113
Transmission Cooler Line and Fitting Service	111
Transmission Cooler Reverse Flushing	114
Valve Body Installation	104
Valve Body Removal	104
Valve Body Service	104

RECOMMENDED FLUID

Recommended (and preferred) fluid for 30RH/32RH transmissions is Mopar ATF Plus, type 7176.

Dexron II is not really recommended and should only be used when ATF Plus is not available.

FLUID LEVEL CHECK

Transmission fluid level should be checked monthly under normal operation. If the vehicle is used for trailer towing or similar heavy load hauling, check fluid level and condition weekly.

Fluid level is checked with the engine running at curb idle speed, the transmission in Neutral and the transmission fluid at normal operating temperature.

FLUID LEVEL CHECK PROCEDURE

(1) Transmission fluid must be at normal operating temperature for accurate fluid level check. Drive vehicle if necessary to bring fluid temperature up to normal hot operating temperature of 82°C (180°F).

(2) Position vehicle on level surface. This is extremely important for accurate fluid level check.

(3) Start and run engine at curb idle speed.

(4) Apply parking brakes.

(5) Shift transmission momentarily into all gear ranges. Then shift transmission back to Neutral.

(6) Clean top of filler tube and dipstick to keep dirt from entering tube.

(7) Remove dipstick and check fluid level as follows:

(a) Dipstick has three fluid level indicator levels (Fig. 1) which are a MIN dot, an OK crosshatch area, and a MAX fill arrow.

(b) Correct maximum level is to MAX arrow mark. Correct acceptable level is to OK mark in crosshatch area.

(c) Incorrect level is at or below MIN dot.

(d) If fluid is low, add only enough Mopar ATF Plus restore correct level. Do not overfill.

CAUTION: Do not overfill the transmission. Overfilling may cause leakage out the pump vent which can be mistaken for a pump seal leak. Overfilling will also cause fluid aeration and foaming as the excess fluid is picked up and churned by the gear train. This will reduce fluid life significantly.

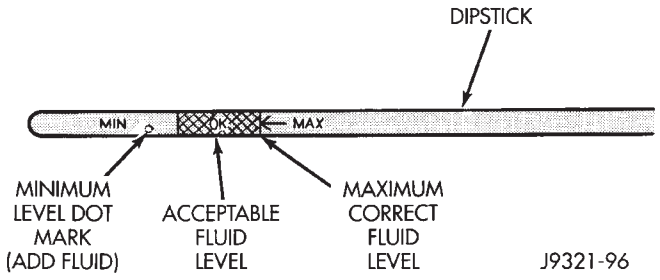

Fig. 1 Fluid Level Marks On Transmission Dipstick

FLUID AND FILTER REPLACEMENT

NORMAL CHANGE INTERVAL

The fluid and filter should be changed (and the bands adjusted) at recommended maintenance intervals, or whenever the transmission has been disassembled for any reason.

Refer to the Driveline section in Group O, Lubrication and Maintenance for recommended change intervals. Refer to the fluid/filter replacement and band adjustment procedures in this section.

SEVERE USAGE CHANGE INTERVAL

Under severe usage, the fluid and filter should be changed and the bands adjusted at 12,000 mile (19 000 Km) intervals.

Severe usage is defined as:

(a) More than half of vehicle operation occurs in heavy city traffic during hot weather (above 90° F).

(b) Vehicle is used for taxi, police, limousine, or similar commercial operation.

(c) Vehicle is used for trailer towing or heavy load hauling.

FLUID/FILTER REPLACEMENT PROCEDURE

(1) Raise vehicle.

(2) Remove oil pan and drain fluid.

(3) Clean oil pan and pan magnet. Then clean remaining gasket material from gasket surface of transmission case.

(4) Remove fluid filter screws and remove filter.

(5) Position new filter on valve body and install filter screws. Tighten screws to 4 N·m (35 in. lbs.) torque.

(6) Adjust rear band at this time if required.

(7) Position new gasket on oil pan and install pan on transmission. Tighten pan bolts to 150 in. lbs. (17 N·m) torque.

(8) Adjust front band at this time if required.

(9) Lower vehicle and refill transmission with Mopar ATF Plus, type 7176 fluid.

REFILLING AFTER OVERHAUL OR FLUID/FILTER CHANGE

The most effective way to avoid overfilling after a fluid change or overhaul is as follows:

(1) Remove dipstick and insert clean funnel in transmission fill tube.

(2) Add following initial quantity of Mopar ATF Plus to transmission:

(a) If only fluid and filter were changed, add **3 pints (1-1/2 quarts)** of ATF Plus to transmission.

(b) If transmission was completely overhauled and torque converter was replaced or drained, add **10 pints (5 quarts)** of ATF Plus to transmission.

(3) Apply parking brakes.

(4) Start and run engine at normal curb idle speed.

(5) Apply service brakes, shift transmission through all gear ranges then back to Neutral, and leave engine running at curb idle speed.

(6) Remove funnel, insert dipstick and check fluid level. Add only enough fluid to bring level to **MIN dot mark on dipstick.**

(7) Drive vehicle until transmission fluid is at normal operating temperature. Then recheck fluid level as described in next step.

(8) Leave engine running at curb idle speed, shift into Neutral, and check fluid level again. This time, add just enough fluid to bring level up to **MAX arrow mark but do not overfill**.

(9) When fluid level is correct, shut engine off, release park brake, remove funnel, and reseat dipstick in fill tube.

SHIFT LINKAGE ADJUSTMENT (YJ)

(1) Check linkage adjustment by starting engine in Park and Neutral.

(2) Adjustment is OK if engine starts only in park and Neutral. Adjustment is incorrect if engine starts in one but not both positions.

(3) If engine starts in any position other than Park or Neutral, or if engine will not start at all, park/neutral position switch may be faulty.

(4) Shift transmission into Park.

(5) Raise vehicle.

(6) Check condition of shift rods, bellcrank, bellcrank brackets and linkage bushings/grommets (Fig. 2). Tighten, repair, replace worn, damaged parts. Do not attempt adjustment if linkage components are worn or damaged.

(7) Loosen shift rod trunnion lock bolt or nut. Be sure upper shift rod slides freely in trunnion (Fig. 2). Also be sure shift rods and bellcrank rotate freely and do not bind at any point.

(8) Verify that manual lever is in Park detent (Fig. 2). Move lever all the way rearward to be sure it is in Park.

(9) Check for positive engagement of park lock by attempting to rotate propeller shaft. Shaft will not turn when park pawl is engaged.

(10) Adjust shift rod trunnion to a obtain free pin fit in bellcrank arm and tighten trunnion lock bolt or nut. Prevent shift rod from turning while tightening bolt or nut. Gearshift linkage lash must be eliminated to obtain proper adjustment. Eliminate lash by pulling downward on shift rod and pressing upward on bellcrank.

(11) Confirm proper adjustment by starting engine in Park and Neutral. Engine should start in these positions only. **If engine starts in any position other than Park or Neutral, adjustment is incorrect or neutral switch is faulty.**

(12) Lower vehicle and verify that steering lock operates correctly.

SHIFT CABLE ADJUSTMENT (XJ)

(1) Shift transmission into Park.

(2) Raise vehicle.

(3) Release cable adjuster clamp to unlock cable (Figs. 3 and 4). Clamp is at transmission end of cable.

(4) Unsnap cable from transmission cable bracket.

(5) Move transmission shift lever fully rearward to Park detent. Lever is on manual valve shaft at driver side of case.

(6) Verify positive engagement of park lock by attempting to rotate propeller shaft. Shaft will not rotate when park lock is engaged.

(7) Snap cable into cable bracket.

(8) Lock shift cable by pressing cable adjuster clamp down until it snaps into place.

(9) Check engine starting. Engine should start only in Park and Neutral.

(10) Lower vehicle.

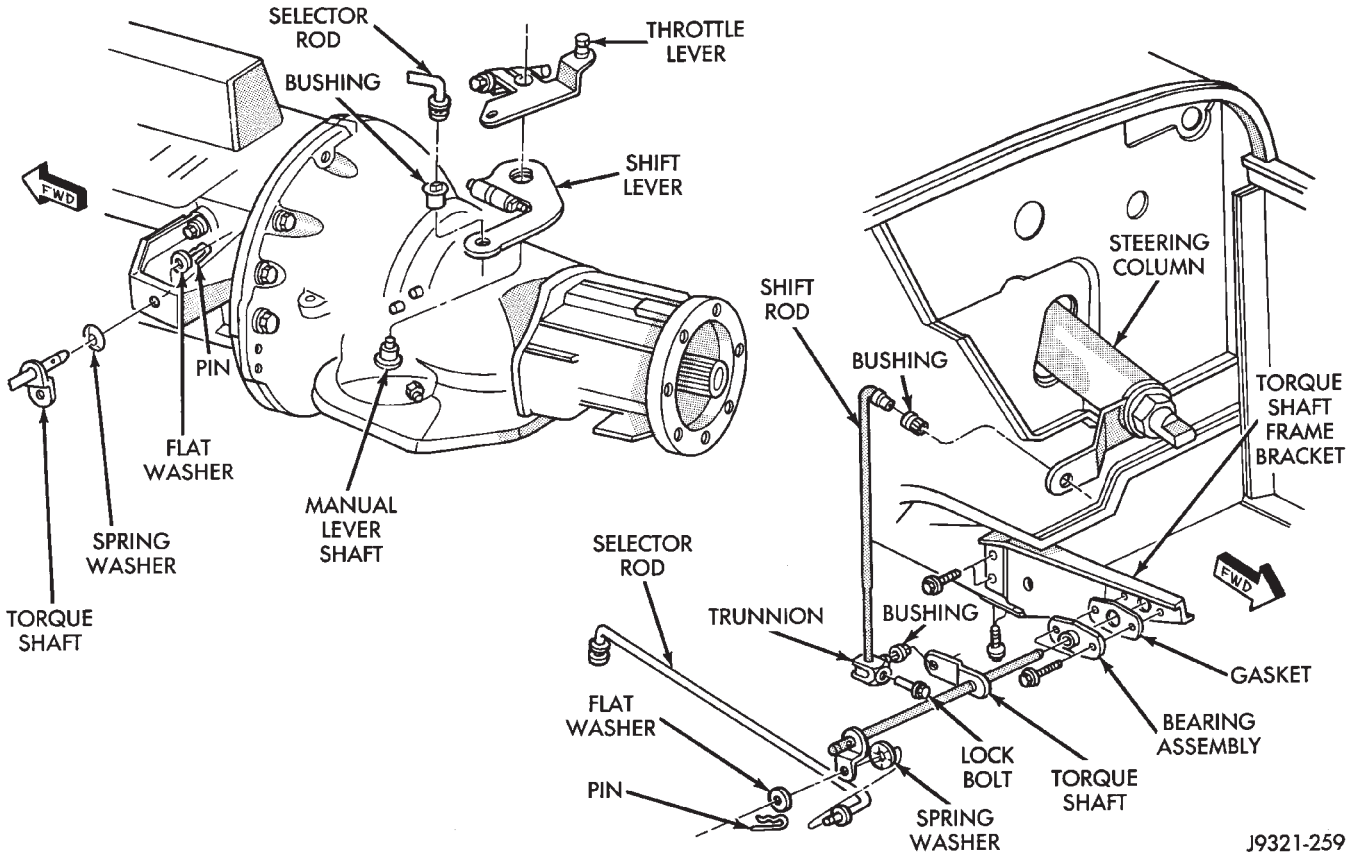

Fig. 2 Gearshift Linkage (YJ)

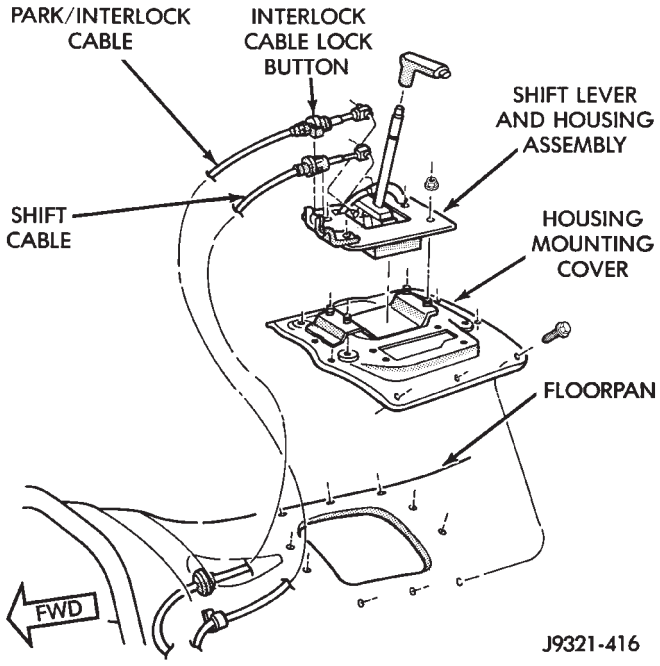

Fig. 3 Shift Cable (XJ)

PARK INTERLOCK CABLE ADJUSTMENT (XJ)

(1) Shift transmission into Park.

(2) Turn ignition switch to Lock position.

(3) Remove shift lever bezel and console screws. Raise bezel and console for access to cable.

(4) Pull cable lock button up to release cable (Fig. 4).

(5) Pull cable forward. Then release cable and press cable lock button down until it snaps in place.

(6) Check adjustment as follows:

(a) Check movement of release shift handle button (floor shift) or release lever (column shift). You should not be able to press button inward or move column lever.

(b) Turn ignition switch to On position.

(c) Press floor shift lever release button or move column lever. Then shift into Neutral. If cable adjustment is correct, ignition switch can not be turned to Lock position. Perform same check with transmission in D range.

(7) Move shift lever back to Park and check ignition switch operation. You should be able to turn switch to Lock position and shift lever release button/lever should not move.

THROTTLE VALVE CABLE ADJUSTMENT (XJ/YJ)

The throttle valve cable controls throttle pressure and kickdown on 30RH/32RH transmissions (Fig. 5).

Correct cable adjustment is important to proper shifting. The cable positions the throttle valve which controls shift speed, shift quality and part throttle downshift sensitivity. If the setting is incorrect, shift quality and shift speeds will be unsatisfactory.

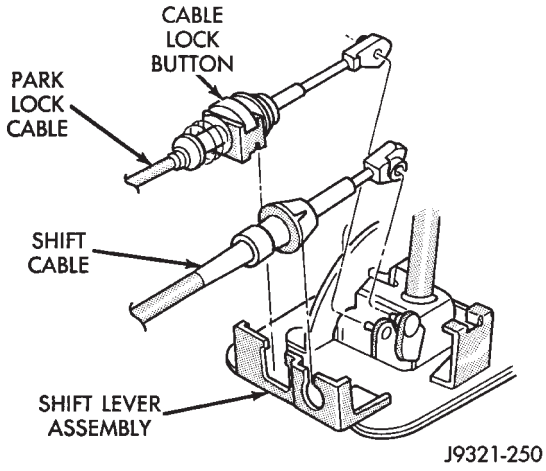

Fig. 4 Park Lock Cable Attachment (XJ)

THROTTLE VALVE CABLE ADJUSTMENT PROCEDURE

Cable adjustment is performed entirely in the engine compartment. It is not necessary to raise the vehicle for access to any other components.

(1) Shift transmission into Park and shut engine off.

(2) Press cable release button (Fig. 6).

(3) Push cable conduit back into cable adjuster body as far as possible (Fig. 7).

(4) Rotate throttle body lever to wide open throttle position. Cable will ratchet to correct adjustment point as lever is rotated (Fig. 7).

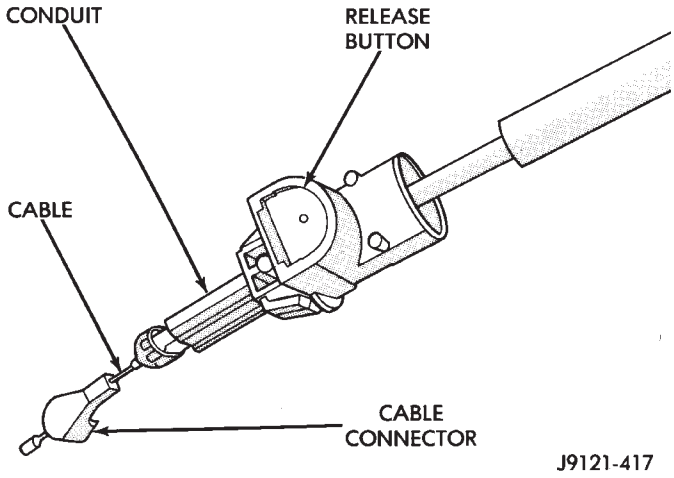

Fig. 6 Throttle Valve Cable Components

FRONT BAND ADJUSTMENT

The front band adjusting screw is located on the left side of the transmission case above the manual valve and throttle valve levers.

(1) Raise vehicle.

(2) Loosen band adjusting screw locknut. Then back locknut off 4-5 turns.

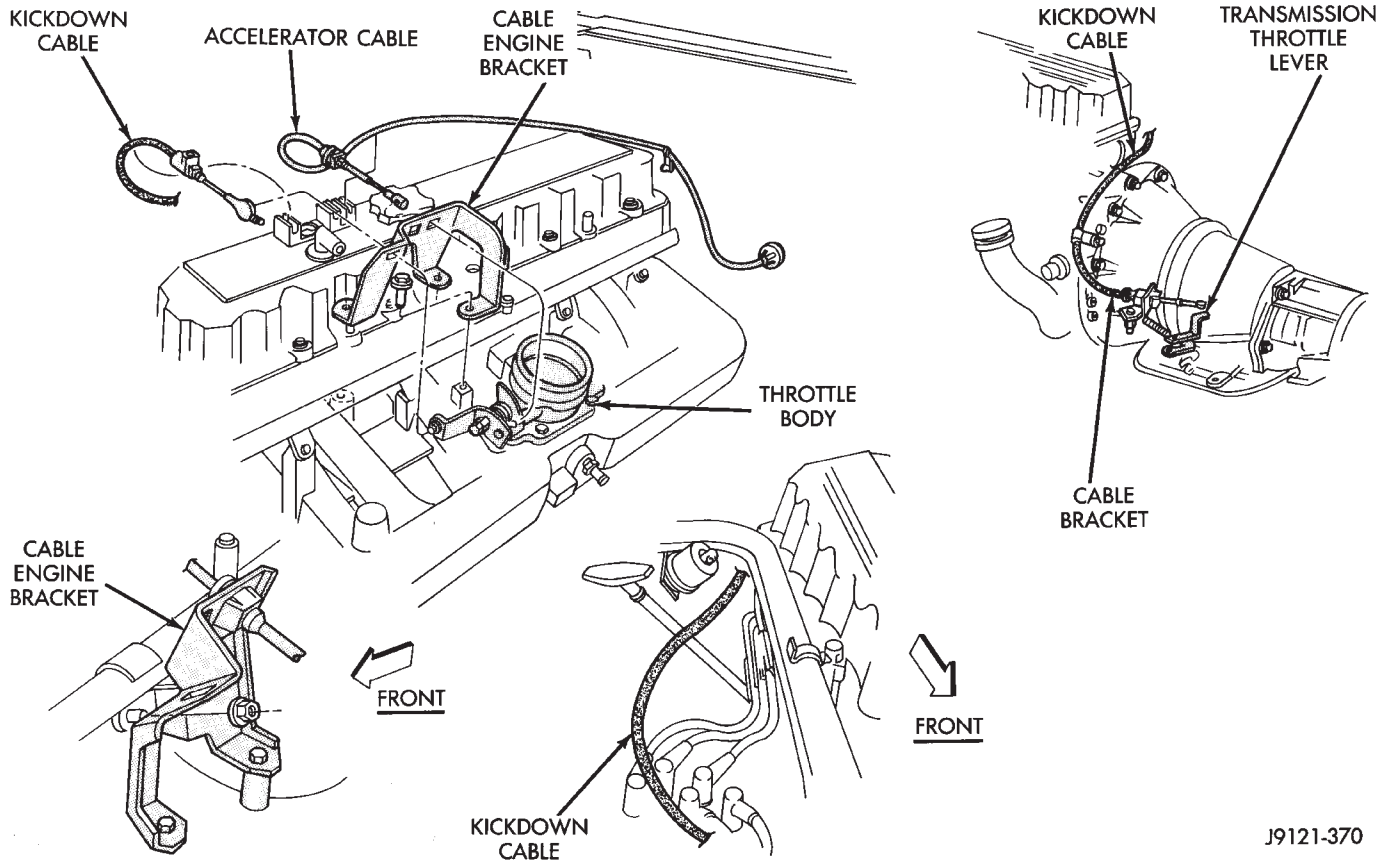

Fig. 5 Transmission Throttle Valve Cable

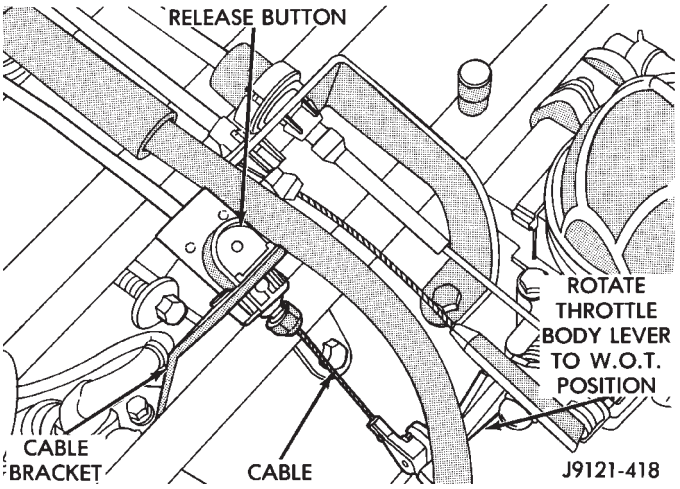

Fig. 7 Throttle Valve Cable Adjustment

(3) Clean adjusting screw threads with Mopar rust penetrant if necessary. Then lubricate threads with Mopar spray lube or petroleum jelly. Be sure screw turns freely in case. This is necessary for accurate adjustment.

(4) Tighten band adjusting screw to 8 N·m (72 in. lbs.) torque with inch-pound torque wrench. **If Adapter Extension C-3705 is needed in order to reach adjusting screw, tighten screw to only 5-6 N·m (47-50 in. lbs.) torque (Fig. 8).**

(5) Back off front band adjusting screw as follows:
- On 30RH (2.5L), back adjusting screw off 2-1/2 turns
- On 32RH (4.0L), back adjusting screw off 2-1/4 turns

(6) Hold adjuster screw in position and tighten locknut to 41 N·m (30 ft. lbs.) torque.

(7) Lower vehicle.

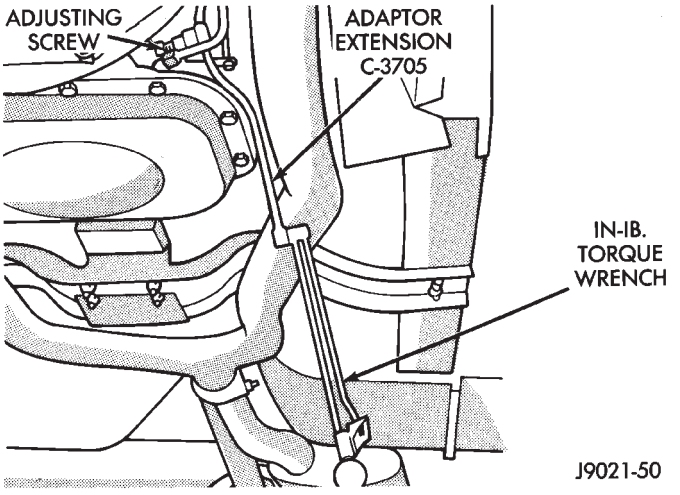

Fig. 8 Front Band Adjustment

REAR BAND ADJUSTMENT

The transmission oil pan must be removed for access to the rear (low-reverse) band adjusting screw.

(1) Raise vehicle.

(2) Remove transmission oil pan and drain fluid.

(3) Loosen band adjusting screw locknut 5-6 turns. Be sure adjusting screw turns freely in lever.

(4) Tighten adjusting screw as follows: On 32Rh transmission, tighten screw to 8 N·m (72 in. lbs.) torque. On 30RH transmission, tighten adjusting screw to 5 N·m (41 in. lbs.) torque (Fig. 9).

(5) Back off rear band adjusting screw as follows:
- On 30RH (2.5L), back adjusting screw off 7 turns
- On 32RH (4.0L), back adjusting screw off 4 turns

(6) Hold adjusting screw in place and tighten locknut to 34 N·m (25 ft. lbs.) torque.

(7) Position new gasket on oil pan and install pan on transmission. Tighten pan bolts to 17 N·m (150 in. lbs.) torque.

(8) Lower vehicle and refill transmission with recommended fluid.

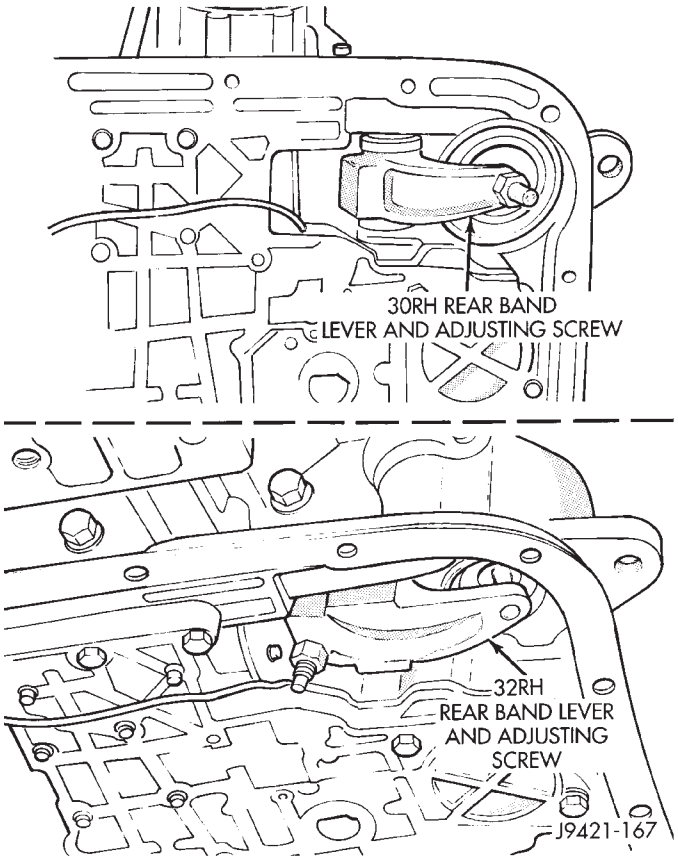

Fig. 9 Rear Band Lever And Adjusting Screw Location

OIL FILTER REPLACEMENT

(1) Raise vehicle.

(2) Remove oil pan and drain fluid.

(3) Remove filter screws and remove oil filter (Fig. 10).

(4) Position new filter on valve body and install filter screws finger tight.

(5) Tighten filter screws to 4 N·m (35 in. lbs.) with inch-pound torque wrench.

(6) Position new gasket on oil pan and install pan

on transmission. Tighten pan bolts to 17 N·m (150 in. lbs.) torque.

(7) Lower vehicle.

(8) Refill transmission with Mopar ATF Plus.

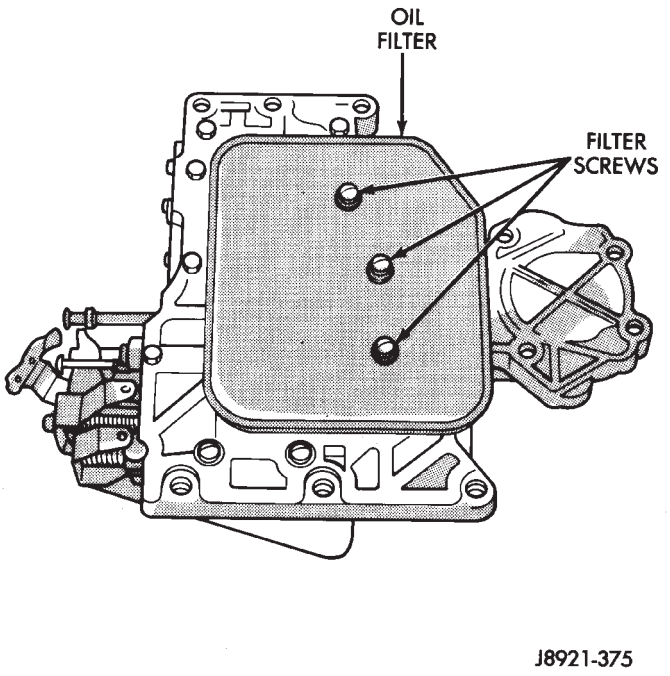

Fig. 10 Oil Filter Screw Locations

VALVE BODY REMOVAL

(1) Raise vehicle.

(2) Remove oil pan and drain fluid.

(3) Disconnect gearshift and throttle linkage at transmission levers.

(4) Loosen clamp bolts and remove throttle and manual valve levers from manual valve shaft.

(5) Disconnect park/neutral position switch wires and remove switch and switch seal.

(6) Remove valve body oil filter.

(7) Remove valve body attaching screws. Lower valve body slightly and remove accumulator piston and spring (Fig. 11). Rotate valve body down and away from case. Pull it forward to disengage park rod and remove valve body.

(8) Position valve body on bench or on repair stand for disassembly, cleaning and inspection (Fig. 12).

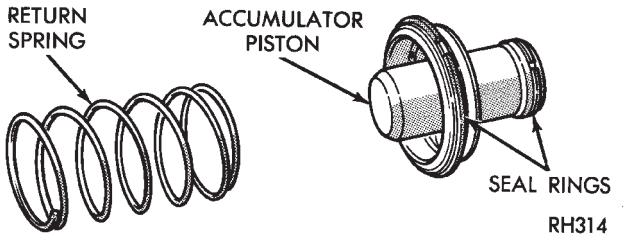

Fig. 11 Accumulator Piston And Spring

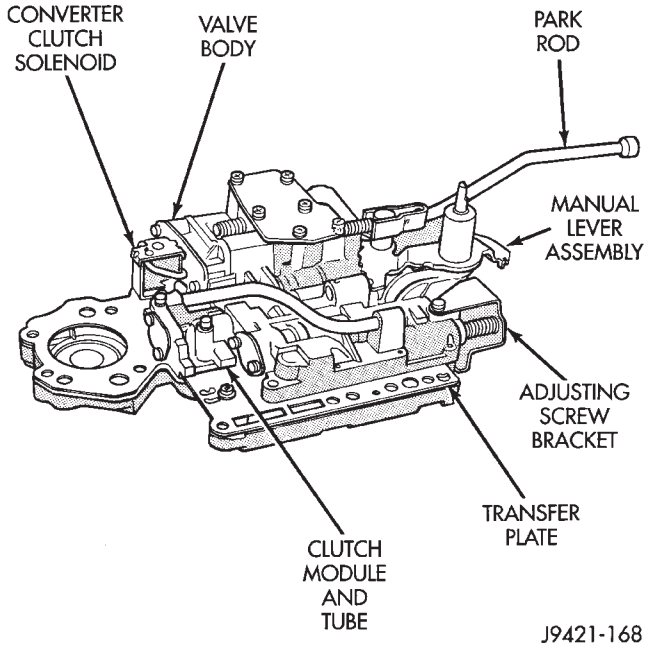

Fig. 12 Valve Body Assembly

VALVE BODY SERVICE

The valve body can be disassembled for cleaning and inspection of the individual components. Valve body service procedures are detailed in the overhaul section.

The only serviceable valve body components are:

- park lock rod and E-clip
- switch valve and spring
- pressure adjusting screw bracket
- throttle valve lever
- manual lever
- manual lever shaft seal, washer, E-clip and detent ball
- fluid filter
- converter clutch solenoid

The remaining valve body components are serviced only as part of a complete valve body assembly.

VALVE BODY INSTALLATION

(1) Place valve body manual lever in low (1 position) so park lock rod can be installed in sprag.

(2) Position park sprag with screwdriver to ease lock rod installation and engagement.

(3) Install new seals on accumulator piston if necessary and install piston in case. A small amount of petroleum jelly can be used to hold piston in place.

(4) Lubricate shaft of manual lever and lip of shaft seal with petroleum jelly.

(5) Raise valve body and align park rod with case opening and park sprag. Then push rod end through opening and past sprag. Rotate propeller shaft if necessary.

(6) Position accumulator spring on transfer plate.

(7) Align valve body and seat it on case. Be sure manual lever shaft and accumulator spring are properly seated.

(8) Hold valve body in position and install one or two attaching bolts to hold valve body in place.

(9) Install remaining valve body bolts. Tighten all bolts evenly in a diagonal pattern to 12 N·m (105 in-lbs) torque.

(10) Install new oil filter and tighten filter screws to 4 N·m (35 in. lbs.) torque.

(11) Connect converter solenoid wire to case connector.

(12) Install manual and throttle levers on throttle lever shaft. Tighten lever clamp screws and check for free operation. Shaft and levers must operate freely without any bind.

(13) Install oil pan and new gasket. Tighten pan bolts to 17 N·m (13 ft. lbs.) torque.

(14) Install seal on neutral switch, install switch in case, and connect switch wires.

(15) Lower vehicle.

(16) Fill transmission with Mopar ATF Plus, Type 7176 fluid.

(17) Adjust gearshift linkage and throttle valve (kickdown) cable if necessary.

GOVERNOR AND PARK GEAR SERVICE

GOVERNOR/PARK GEAR REMOVAL

(1) Raise vehicle.

(2) Mark both propeller shaft yokes for assembly reference and disconnect propeller shafts at transfer case.

(3) Disconnect speed sensor wires and remove speedometer adapter and sensor.

(4) Position support stand under transmission converter housing.

(5) Remove rear crossmember.

(6) Disconnect parking brake cable at equalizer and disconnect exhaust components as necessary.

(7) Support transfer case with jack.

(8) Remove bolts attaching transfer case to transmission adapter housing and remove transfer case.

(9) Remove bolts attaching adapter, or extension housing to transmission and remove adapter/housing.

(10) Loosen but do not remove bolts that attach governor body to park gear.

(11) Rotate transmission output shaft until governor weight assembly is accessible. Then remove E-clip at this end of governor shaft.

(12) Remove governor valve and shaft from governor body (Fig. 13).

(13) Remove snap rings and washers that retain governor body and park gear assembly on output shaft (Fig. 14).

(14) Remove governor body-park gear assembly from output shaft (Fig. 15).

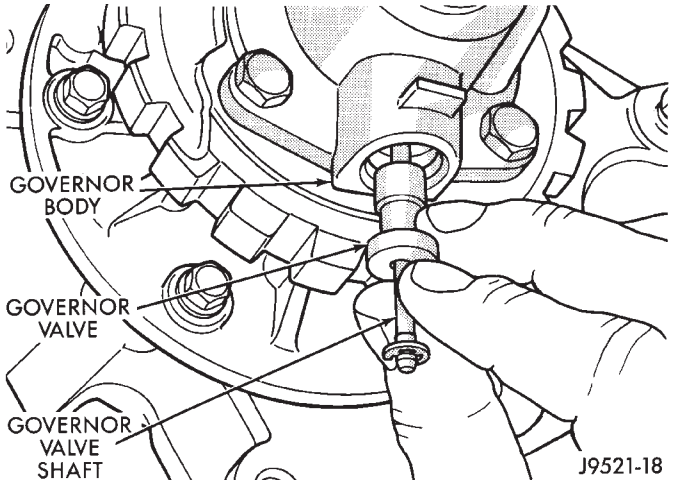

Fig. 13 Governor Valve And Shaft Removal

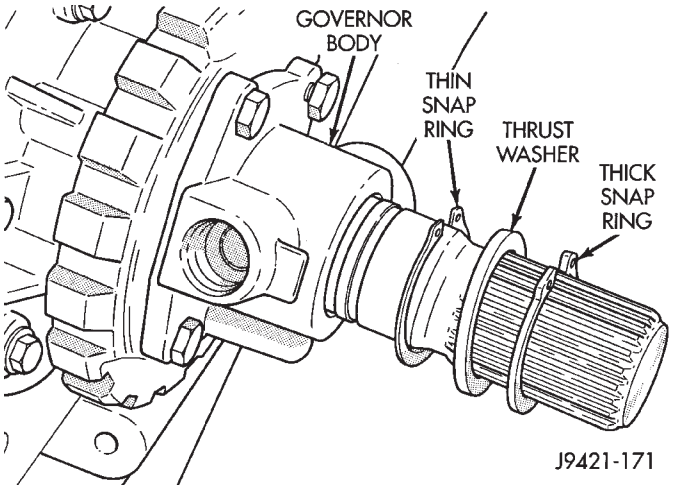

Fig. 14 Governor Body/Park Gear Retaining Snap Rings And Thrust Washer Position

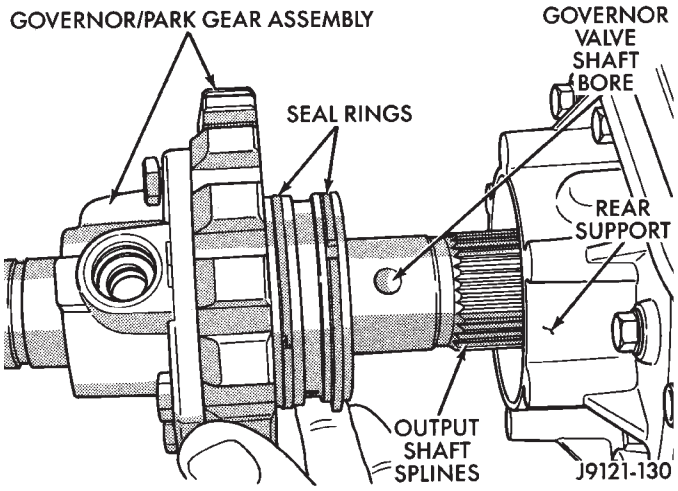

Fig. 15 Governor Body And Park Gear Removal/ Installation

GOVERNOR BODY/PARK GEAR DISASSEMBLY

(1) Remove bolts attaching governor body to park gear; then separate body from gear.

(2) Remove cone shaped filter from park gear (Fig. 16).

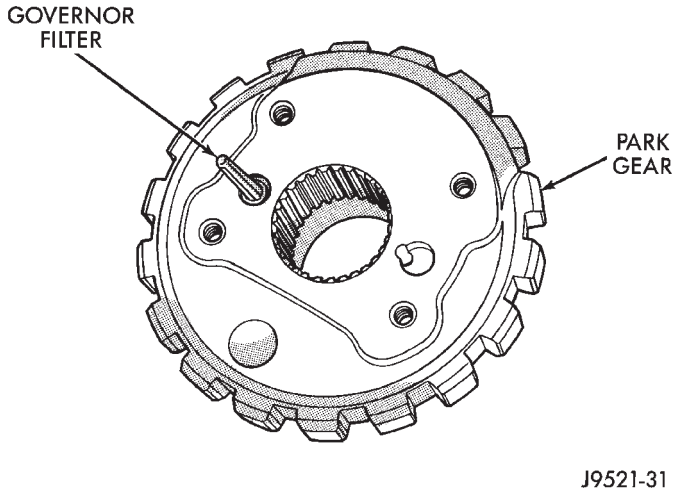

Fig. 16 Governor Filter Position

(3) Remove snap ring and retainer washer that secure governor weight assembly in body. Use Miller C-3915 Internal Pliers to remove snap ring (Fig. 17).

(4) Remove governor weight assembly from governor body bore.

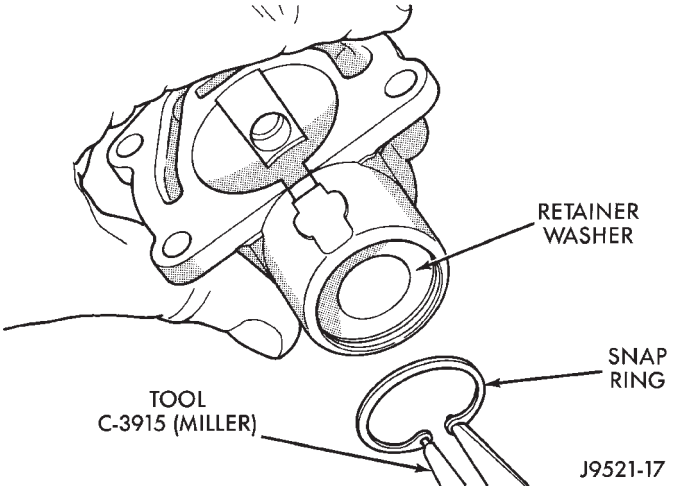

Fig. 17 Governor Weight Retaining Snap Ring And Washer Removal

(5) On 30RH, disassemble **two-stage** governor weight as follows:

(a) Position weight assembly on suitable size socket (Fig. 18).

(b) Push inner weight downward with nut driver. Then remove inner weight snap ring with Snap Ring Plier Tool C-3915 (Fig. 18).

(c) Remove inner weight and spring from outer weight.

(6) On 32RH, disassemble **three-stage** governor weight as follows:

(a) Slide inner and intermediate assembly out of outer weight.

(b) Position intermediate weight on suitable size socket (Fig. 19).

(c) Push inner weight downward with nut driver. Then remove inner weight snap ring with Snap Ring Plier Tool 6823 (Fig. 19).

(d) Remove inner weight and spring from intermediate weight.

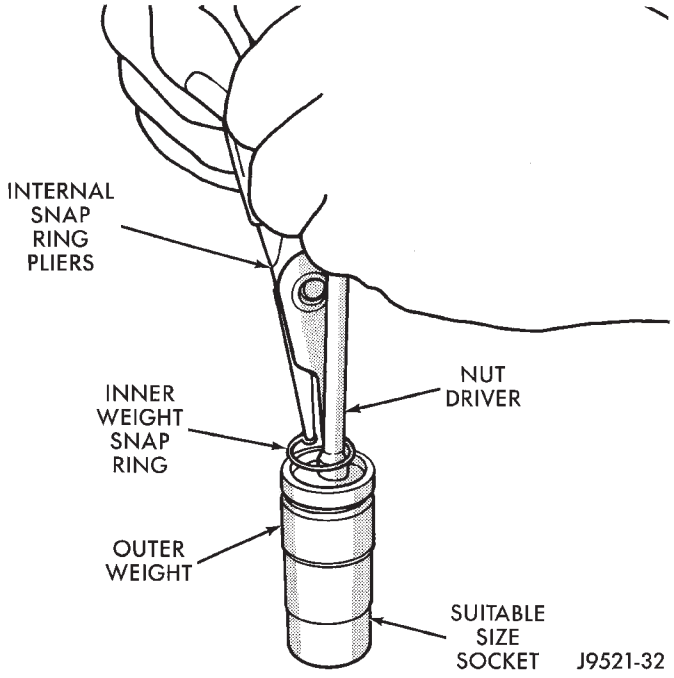

Fig. 18 Two-Stage Inner Weight Snap Ring Removal/Installation

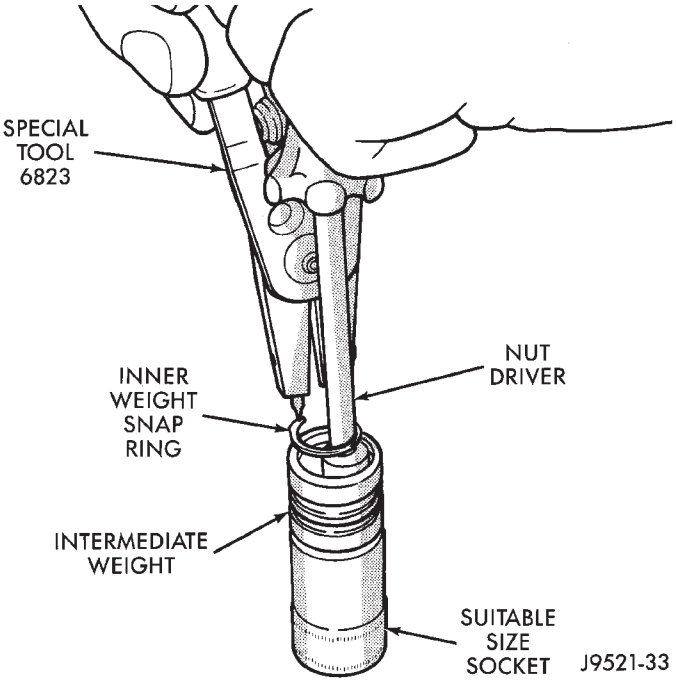

Fig. 19 Three-Stage Inner Weight Snap Ring Removal/Installation

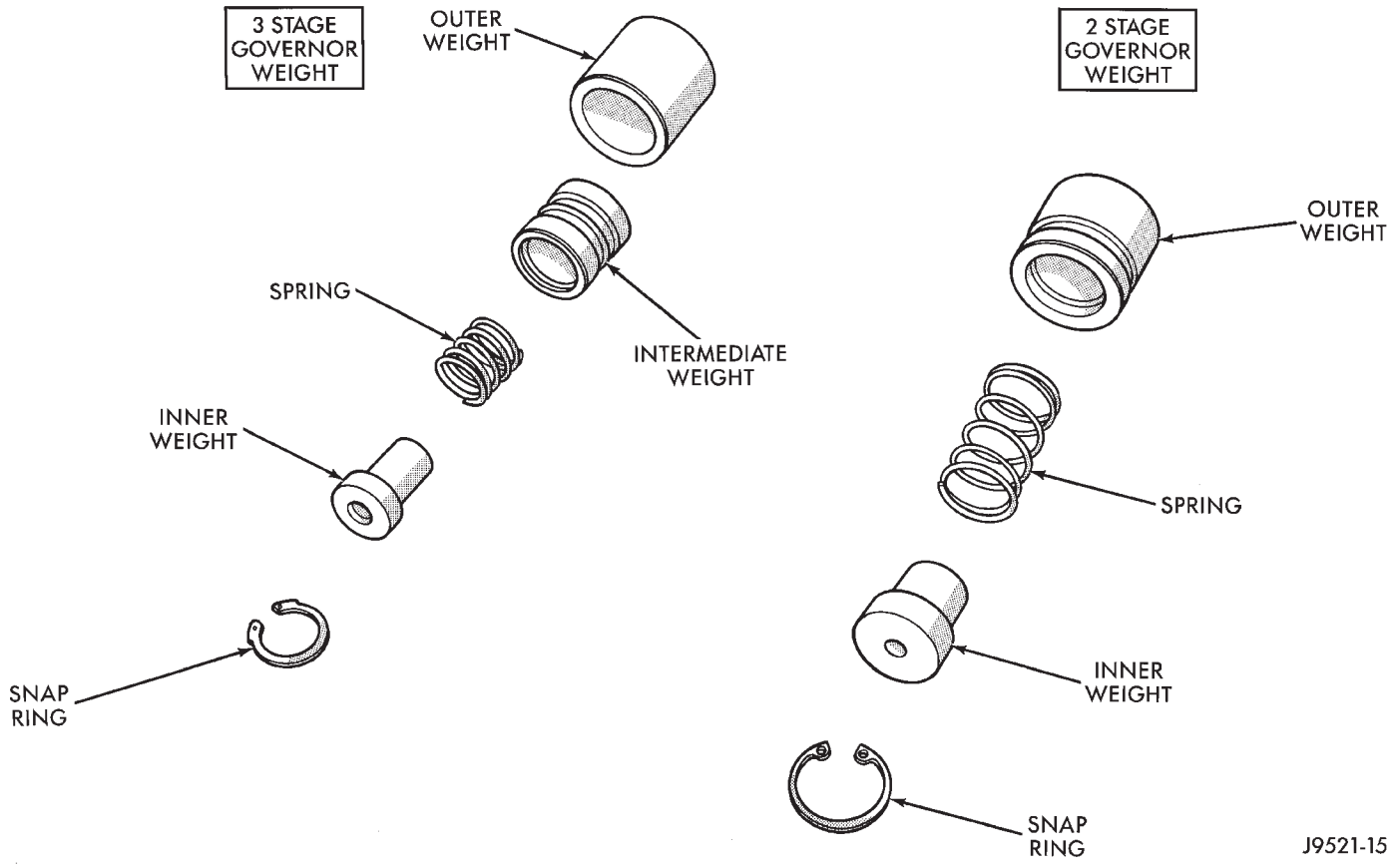

Fig. 20 Governor Weight Components (2 and 3-Stage)

Governor/Park Gear Cleaning and Inspection

Thoroughly clean all the governor parts in a suitable cleaning solution but do not use any type of caustic cleaning agents.

The governor weight components (Fig. 20) and the governor valve (Fig. 21), must slide freely in their bores when clean and dry. Minor surface scratches and burrs can be smoothed with crocus cloth

The aluminum governor valve and outer weight have a hard coating on them. Check condition of this coating carefully. Do not reuse either part if the coating is damaged.

Inspect the governor weight spring for distortion. Replace the spring, if distorted, collapsed, or broken.

Clean the filter in solvent and dry it with low pressure compressed air. Replace the filter, if damaged. Inspect the park gear for chipped or worn gear teeth or damaged ring grooves. Replace the gear, if damaged.

Check the teeth on the park gear for wear or damage. Replace the gear if necessary. Inspect the metal seal rings on the park gear hub. Replace the rings only if severely worn, or broken.

GOVERNOR/PARK GEAR ASSEMBLY AND INSTALLATION

(1) Lubricate governor components with transmission fluid during assembly.

(2) Install new seal rings on park gear hub. Install ring with interlock ends first and ring with plain ends last. Slip each ring on hub and seat them in grooves. Verify that rear ring ends are securely interlocked before proceeding.

CAUTION: Exercise care when installing the rings. They are easily broken if overspread or twisted during installation.

(3) Insert filter screen in park gear. Note that gear has one filter bore that is concentric and one that has a notch in it. Filter goes in bore that is concentric as shown (Fig. 16).

(4) Position governor body on park gear. Be sure filter is properly aligned in body recess.

(5) Install governor body bolts. Do not fully tighten bolts at this time.

(6) Assemble governor weight components (Fig. 20). Then install weight assembly in governor body. **Be sure inner weight snap ring is fully seated before proceeding.**

(7) Install retainer washer and snap ring that secure governor weight assembly in governor body.

(8) Align and install park gear/governor assembly on output shaft. **Be sure hole in output shaft for governor valve shaft is aligned with governor valve bore in governor body. Valve shaft will**

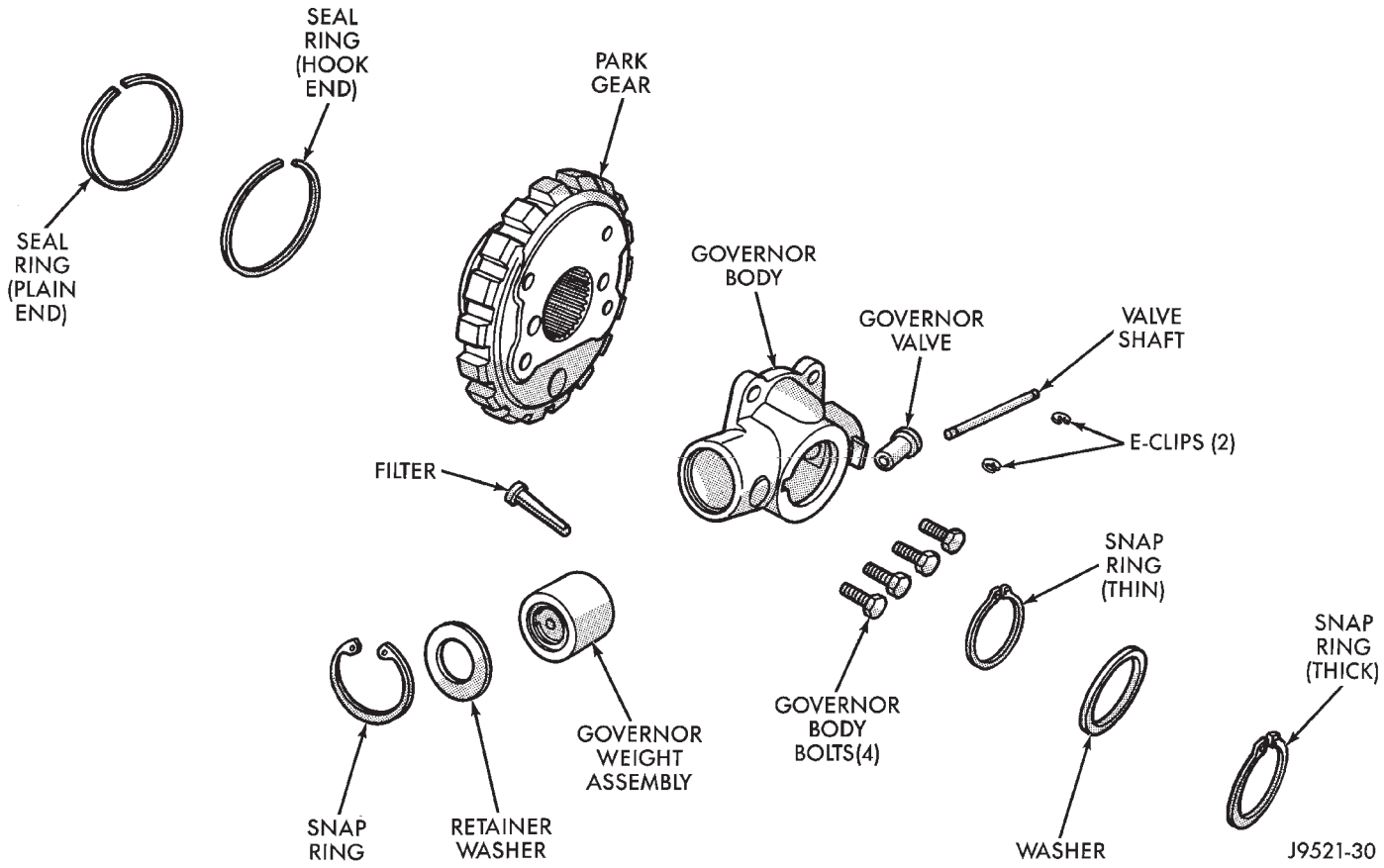

Fig. 21 Governor Components (30RH/32RH)

bind if misalignment occurs. Remove and reposition governor body if necessary.

(9) Verify that shaft bore in governor body and output shaft are aligned.

(10) Verify that governor valve will be indexed with spotface in output shaft. Reposition valve, shaft and body if necessary.

(11) Install an E-clip on one end of governor valve shaft. Be sure rounded side of E-clip is facing out (away from weight).

(12) Insert governor valve shaft through governor weight. Be sure shaft slides freely in bore.

(13) Install governor valve on shaft and in governor body bore.

(14) Install remaining E-clip on governor valve shaft. Be sure rounded side of E-clip is facing out (away from valve).

(15) Install governor body-park gear snap rings and washer on output shaft as follows:

(a) On models with single snap ring, install snap ring. Be sure ring is seated in shaft.

(b) On models with thrust washer and two snap rings, install thin snap ring first. Then install thrust washer second, and thick snap ring last (Fig. 14).

16(c) Verify correct position of snap rings. **Be sure flat side of each snap ring is toward governor body.**

(16) Tighten governor body-to-park gear bolts to 11 N·m (95 in. lbs.).

(17) Install extension housing/adapter and gasket on transmission. Tighten housing/adapter bolts to 32 N·m (24 ft. lbs.).

(18) Install transfer case and rear crossmember.

(19) Install speed sensor and speedometer components and connect speed sensor wires.

(20) Connect exhaust components and brake cable, if removed.

(21) Align and connect propeller shafts. Tighten clamp bolts to 19 N·m (14 ft. lbs.) torque.

(22) Remove supports and lower vehicle.

(23) Check and adjust transmission fluid level.

PARK LOCK COMPONENT REPLACEMENT

COMPONENT REMOVAL

(1) Raise vehicle and remove transfer case and adapter housing from transmission.

(2) Slide sprag shaft out of adapter housing and remove park sprag and spring (Fig. 22).

(3) Remove snap ring and slide plug and pin assembly out of housing (Fig. 22).

(4) If park rod must be serviced, remove valve body and remove rod.

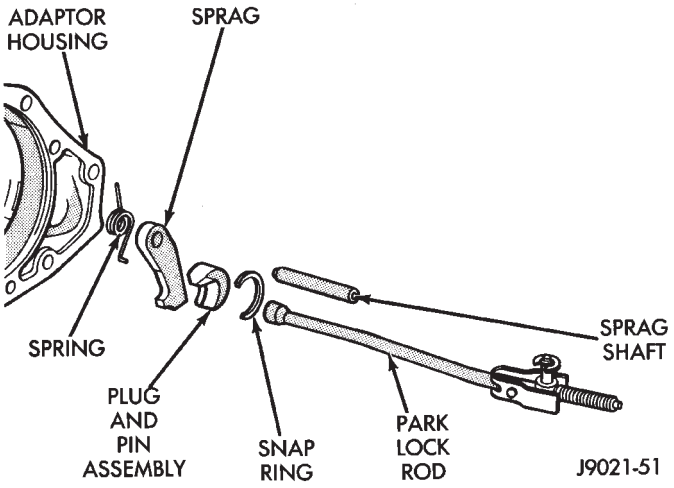

Fig. 22 Park Lock Components

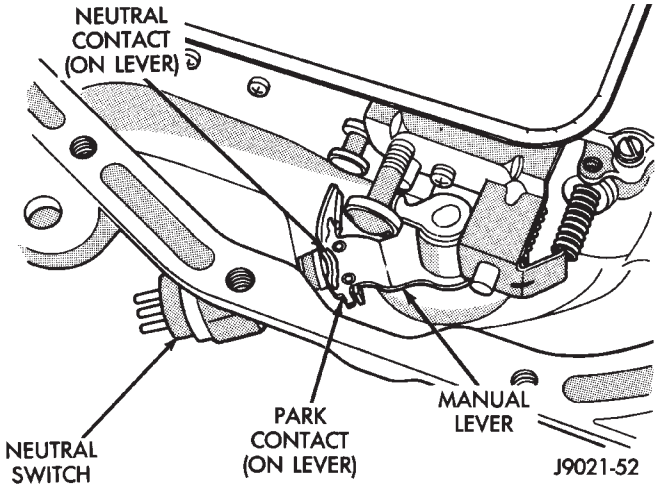

Fig. 23 Park/Neutral Position Switch And Manual Lever

Inspection

Check the sprag shaft for scores and for free movement in the housing and sprag.

Check the sprag and control rod springs for loss of tension or distortion. Check the square lug on the sprag for broken edges. Check the lugs on the governor support (park gear) for broken edges. Replace any park lock components that are worn or damaged.

Check the knob on the end of the control rod for nicks, burrs and free turning. Replace the rod if the knob is grooved, or worn, or if the rod is bent. The park lock rods used in Chrysler 3-speed transmissions are different lengths. If the rod must be replaced, be sure to install the correct length and shape rod.

COMPONENT INSTALLATION

(1) Install park lock rod on valve body.

(2) Install reaction plug and pin assembly in the housing and install the snap ring.

(3) Position sprag and spring in housing and install sprag shaft. Be sure square lug on sprag is facing park gear and that spring is positioned so it moves sprag away from park gear.

(4) Install valve body.

(5) Install adapter housing and transfer case.

PARK/NEUTRAL POSITION SWITCH SERVICE

The starter feed circuit of the switch is through the switch center terminal (Fig. 23). It provides a ground for the starter solenoid circuit through the gearshift lever in park and neutral only.

The two outer terminals of the park/neutral position switch are for the backup lamp switch circuit.

SWITCH TEST PROCEDURE

(1) Remove wiring connector from switch.

(2) Test continuity between switch center terminal and transmission case. Continuity should exist only when transmission is in Park or Neutral. Replace switch if continuity occurs in any gear other than Park or Neutral.

(3) Shift into reverse and test continuity between two outside terminals on switch. Continuity should exist only when transmission is in reverse.

(4) Leave transmission in reverse and test continuity between each switch outer terminal and transmission case. Continuity should not exist between either pin and case in reverse.

(5) If switch tests OK, check gearshift linkage adjustment or backup light circuit. Replace switch if it fails continuity tests.

SWITCH REPLACEMENT

(1) Position drain pan under neutral switch.

(2) Disconnect switch wires.

(3) Remove switch from transmission.

(4) Move shift lever to Park and Neutral positions. Inspect manual lever fingers, lever and shaft for proper alignment with switch opening in case. Replace lever if worn or bent. Do not attempt to straighten the lever.

(5) Install new switch and seal in case. Tighten switch to 33 N·m (24 ft. lbs.) torque.

(6) Adjust transmission fluid level as required.

(7) Verify switch operation.

SPEEDOMETER SERVICE

Rear axle gear ratio and tire size determine speedometer pinion requirements. If the pinion must be replaced, refer to the parts catalogue information for the correct part. It is important for speedometer accuracy that the pinion have the correct number of teeth.

The speedometer assembly used in XJ models is the new unit type (one-piece) speed sensor (Fig. 24). However, YJ models may be equipped with either the new unit style, or the older style that has a two-piece

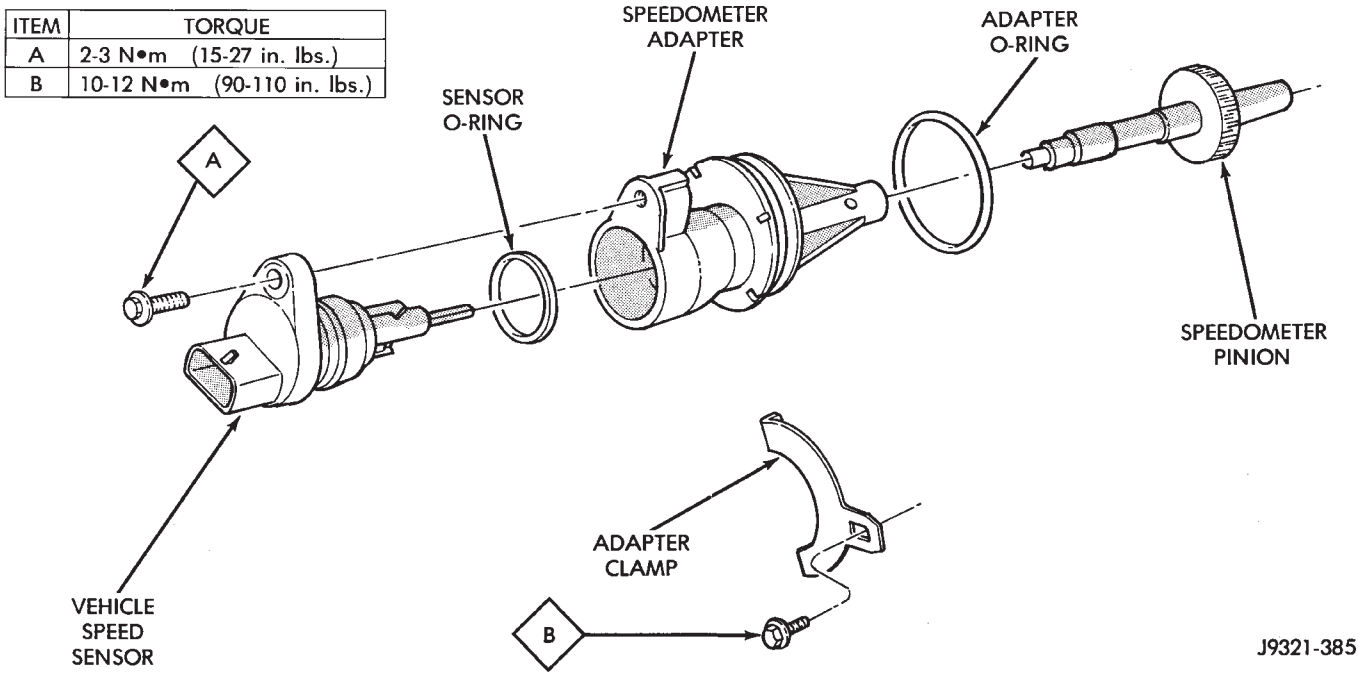

Fig. 24 Speedometer Components (With Unit Style Sensor)

speed sensor and metal adapter (Fig. 25). Service procedures for both styles are described in the following procedures.

SPEEDOMETER ASSEMBLY REMOVAL (WITH UNIT STYLE SENSOR)

(1) Raise vehicle.
(2) Disconnect wires from vehicle speed sensor.
(3) Remove adapter clamp and screw (Fig. 24).
(4) Remove speed sensor and speedometer adapter as assembly.
(5) Remove speed sensor retaining screw and remove sensor from adapter.
(6) Remove speedometer pinion from adapter.
(7) Inspect sensor and adapter O-rings (Fig. 24). Remove and discard O-rings if worn or damaged.
(8) Inspect terminal pins in vehicle speed sensor. Clean pins with Mopar electrical spray cleaner if dirty or oxidized. Replace sensor if faulty, or pins are loose, severely corroded, or damaged.

SPEEDOMETER INSTALLATION AND INDEXING (UNIT STYLE)

(1) Thoroughly clean adapter flange and adapter mounting surface in housing. Surfaces must be clean for proper adapter alignment and speedometer operation.
(2) Install new O-rings on speed sensor and speedometer adapter if necessary (Fig. 25).
(3) Lubricate sensor and adapter O-rings with transmission fluid.
(4) Install vehicle speed sensor in speedometer adapter. Tighten sensor attaching screw to 2-3 N·m (15-27 in. lbs.) torque.
(5) Install speedometer pinion in adapter.
(6) Count number of teeth on speedometer pinion. Do this before installing assembly in housing. Then lubricate pinion teeth with transmission fluid.
(7) Note index numbers on adapter body (Fig. 25). These numbers will correspond to number of teeth on pinion.
(8) Install speedometer assembly in housing.
(9) Rotate adapter until required **range numbers are at 6 o-clock position. Be sure range index numbers correspond to number of teeth on pinion gear.**
(10) Install speedometer adapter clamp and retaining screw. Tighten clamp screw to 10-12 N·m (90-110 in. lbs.) torque.
(11) Connect wires to vehicle speed sensor.
(12) Lower vehicle and top off transmission fluid level if necessary.

SPEEDOMETER COMPONENT REMOVAL (TWO-PIECE SENSOR)

(1) Raise vehicle.
(2) Disconnect speed sensor wires.
(3) Remove bolt attaching vehicle speed sensor to sensor adapter. Then slide sensor out of adapter.
(4) Inspect speed sensor mounting area in sensor adapter. If transmission fluid is found in this area, oil seal in metal speedometer adapter is leaking and will have to be replaced.
(5) Remove speedometer adapter clamp bolt and remove clamp (Fig. 26).
(6) Remove speedometer adapter, sensor adapter and speedometer pinion as assembly.

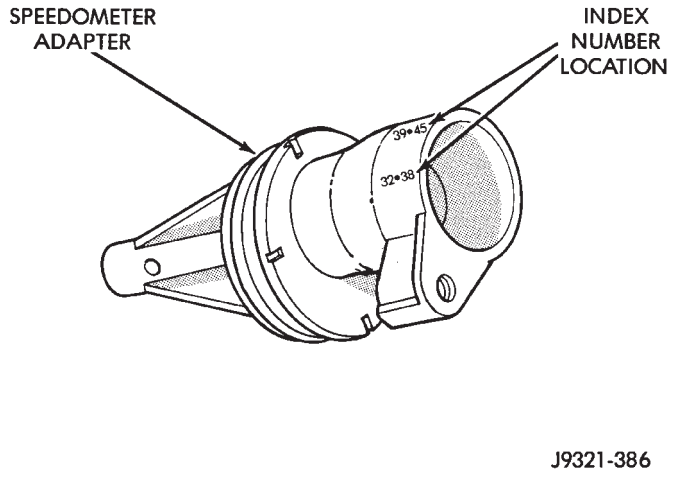

Fig. 25 Location Of Index Numbers On Speedometer Adapter (Unit Style Sensor)

SPEEDOMETER COMPONENT INSTALLATION AND INDEXING (TWO-PIECE SENSOR)

(1) Replace speedometer O-ring if cut, torn, or worn.

(2) If oil seal in metal speedometer adapter needs replacement, remove old seal with pointed tool. Then install new seal with Special Tool C-4004. Push seal into place with tool until tool bottoms (Fig. 27).

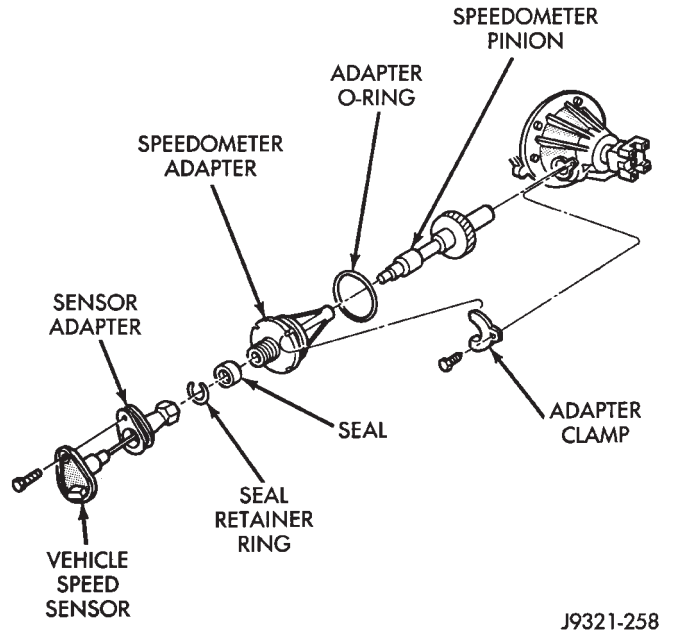

Fig. 26 Speedometer Components (With Two-Piece Sensor)

(3) Clean speedometer adapter mounting surface of transmission, or transfer case thoroughly.

(4) Lubricate adapter seals with transmission fluid.

(5) Count number of teeth on speedometer pinion. Do this before installing pinion and adapter.

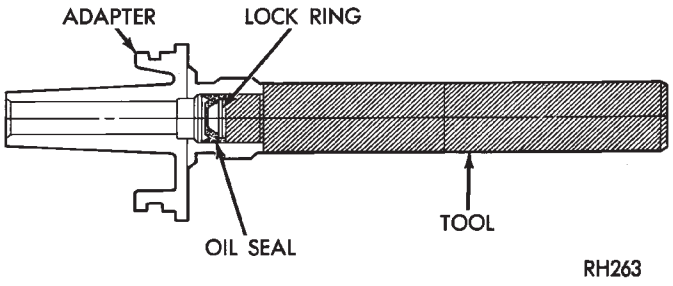

Fig. 27 Installing Speedometer Adapter Seal (With Two-Piece Sensor And Metal Adapter)

(6) Note range numbers on face of speedometer adapter (Fig. 27). These numbers correspond to number of teeth on speedometer pinion.

(7) Install pinion in adapter and install assembled pinion and adapter in transmission or transfer case.

(8) Rotate speedometer adapter until required range numbers are at 6 o'clock position (Fig. 28). **Verify that range numbers correspond to number of teeth on pinion.**

(9) Push speedometer adapter into place until seated.

(10) Install speedometer adapter clamp and bolt. Tighten bolt to 11 N·m (100 in. lbs.) torque.

(11) Install sensor adapter on speedometer adapter. Tighten sensor adapter coupling nut to 17 N·m (150 in. lbs.) torque.

(12) Carefully align and insert vehicle speed sensor into sensor adapter.

(13) Install bolt that attaches speed sensor to adapter. Tighten bolt to 5-8 N·m (48-72 in. lbs.)

(14) Connect wires to speed sensor.

(15) Lower vehicle.

(16) Check top off transmission fluid level if necessary.

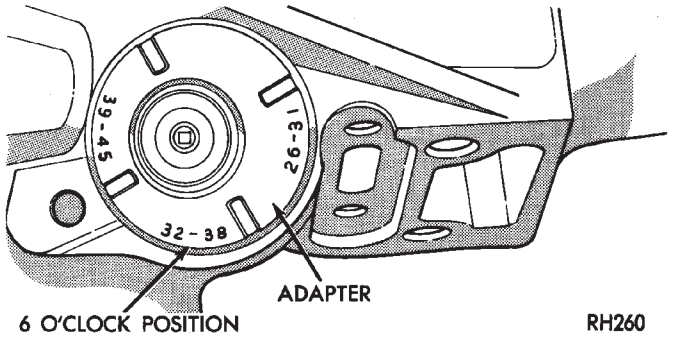

Fig. 28 Indexing Speedometer Adapter (With Two-Piece Sensor)

TRANSMISSION COOLER LINE AND FITTING SERVICE

The transmission cooler lines are attached with quick connect fittings. Two types of fitting will be used.

Early production models will have the type 2 fitting used previously. This fitting requires a release tool to disconnect the cooler line from the fitting (Fig. 29). Later production models will have a new style fitting that does not require any type of release tool. This fitting has a plastic insert with built-in release tabs (Fig. 30).

Cooler Line And Fitting Service

The cooler lines and fittings are only serviceable as assemblies. Damaged fittings or cooler lines are to be replaced. Fittings swedged into cooler line hoses (Fig. 31) are serviced only as part of the entire cooler hose.

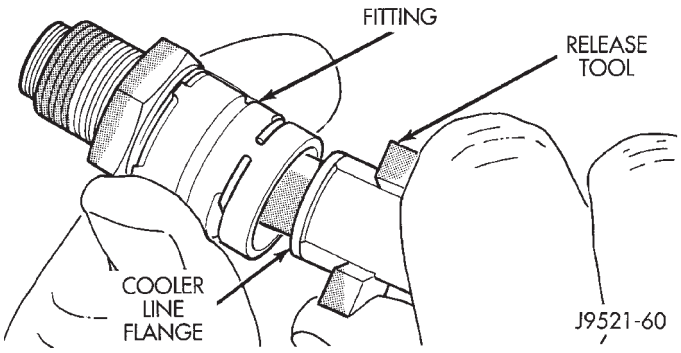

Fig. 29 Disconnecting Cooler Line With Release Tool (Type 2 fitting)

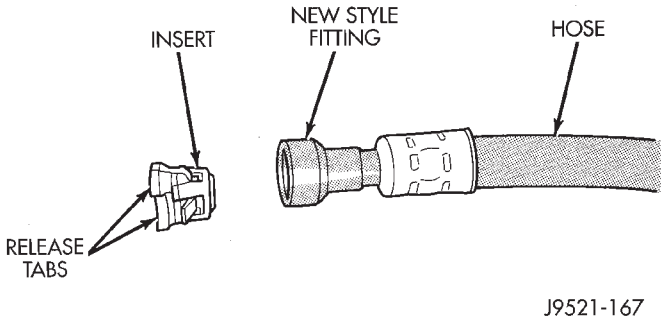

Fig. 30 New Style Quick Connect Fitting With Insert

DISCONNECTING COOLER LINES WITH TYPE 2 FITTING

(1) If fitting and cooler line are encrusted with dirt, mud, or grease, clean fitting and cooler line with Mopar spray type carburetor or brake cleaner. Plastic release tool will not fit into retainer clip if fitting is full of foreign material.

(2) Slide small plastic release tool into fitting until tool bottoms against cooler line flange (Fig. 29).

(3) Push and turn release tool to spread retainer clip and pull cooler line out of fitting (Fig. 29).

(4) Cover open ends of cooler lines and fittings to prevent dirt entry.

(5) Inspect condition of fitting. Replace transmission fitting as an assembly if fitting body or retainer clip is damaged. Replace cooler line as assembly, if fitting swedged into cooler line hose, is damaged.

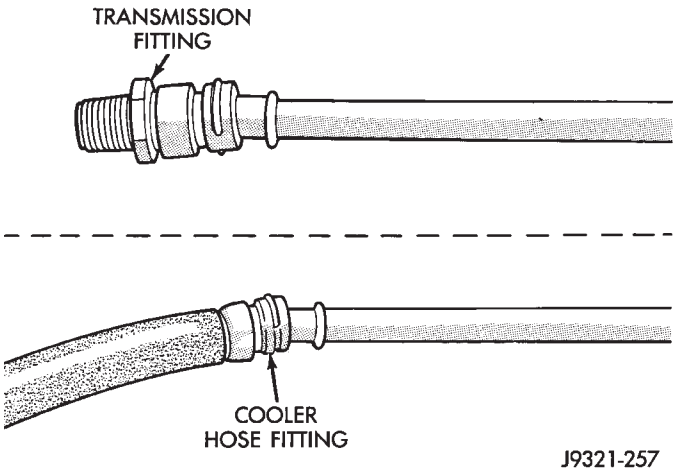

Fig. 31 Cooler Line Fitting Placement

DISCONNECTING COOLER LINES WITH NEW STYLE FITTING

The new style fitting **does not** require any kind of release tool. The fitting inserts have built-in release tabs that only require finger pressure to release them.

The new style fitting insert is unique. The insert does not stay in place inside the fitting when released. Instead, the insert remains on the line and does not have to be removed.

To release a new style fitting, simply squeeze the insert tabs (Fig. 32) and disconnect the line. The insert will remain in place on the line, or fitting and does not have to be removed (Fig. 33).

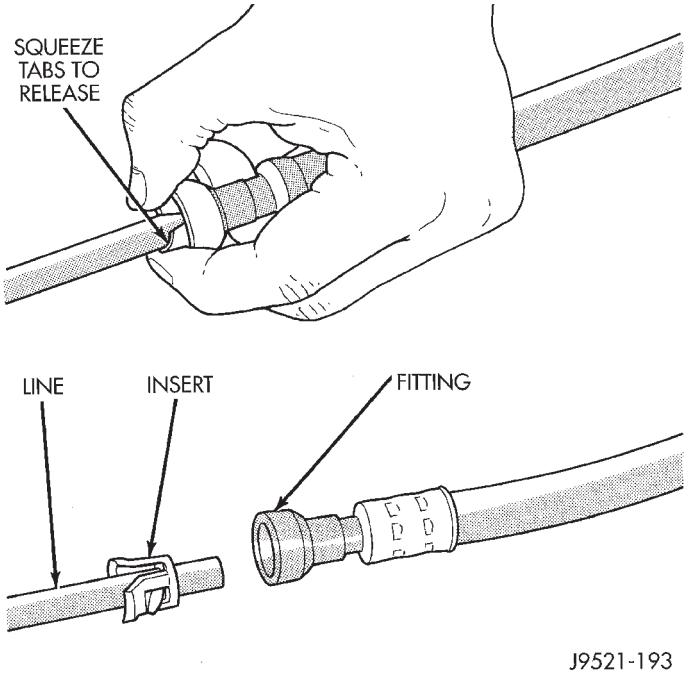

Fig. 32 Releasing Cooler Line From New Style Fitting

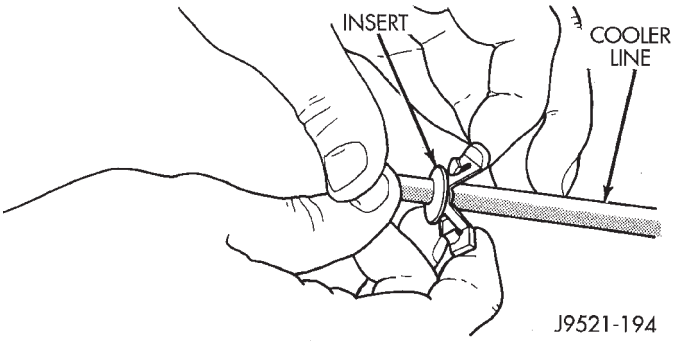

Fig. 33 New Style Fitting Insert (On Cooler Line)

CONNECTING COOLER LINES AND FITTINGS (ALL TYPES)

(1) Wipe cooler line and fitting clean with shop towel.

(2) Insert cooler line into fitting. Then push line inward until retainer or insert secures line. A snap or click sound will be heard when the insert tabs or retainer clip seats behind the cooler line flange.

(3) **Pull outward on cooler lines/fittings to verify they are properly secured.**

CAUTION: The wire retainer clips or insert release tabs secure the cooler lines. If the clips or tabs are deformed, distorted, or not fully seated, normal fluid pressure could unseat the lines resulting in fluid loss and transmission damage. Be very sure the cooler lines are firmly secured as described in step (3).

CONVERTER DRAINBACK CHECK VALVE SERVICE

The converter drainback check valve is located in the cooler outlet (pressure) line near the radiator lower tank. The valve prevents fluid drainback when the vehicle is parked for lengthy periods. The valve check ball is spring loaded and has an opening pressure of approximately 2 psi. Refer to the cooler flow test procedure for valve testing.

The valve is serviced as an assembly; it is not repairable. Do not clean the valve if restricted, or contaminated by sludge, or debris. If the valve fails, or if a transmission malfunction occurs that generates sludge and/or clutch particles and metal shavings, the valve must be replaced.

The valve must be removed whenever the cooler and lines are reverse flushed. The valve can be flow tested when necessary. The procedure is exactly the same as for flow testing a cooler.

If the valve is restricted, installed backwards, or in the wrong line, it will cause an overheat condition and possible transmission failure.

CAUTION: The drainback valve is a one-way valve. As such, it must be properly oriented in terms of flow direction. In addition, the valve must only be installed in the pressure line. Otherwise flow will be blocked causing overheat and eventual transmission failure.

TRANSMISSION COOLER FLOW TESTING

The transmission main and auxiliary coolers, plus the drainback valve, should be flow tested whenever fluid overheating is noted.

Restricted flow caused by contamination, or a cooler malfunction, reduces lubrication fluid flow throughout the transmission. This can result in fluid overheating, fluid breakdown, bushing wear, shift problems and component failure.

Normal color of transmission fluid varies from bright red, to light pink. Fluid overheating is indicated when fluid color ranges from orange-brown to black, and the fluid smells burned, or contains sludge.

CAUTION: If a transmission malfunction contaminates the fluid with clutch disc and metal particles, the cooler and lines must be reverse flushed thoroughly. Flushing will prevent sludge and particles from flowing back into the transmission and converter after repair.

Cooler flow is tested by measuring the amount of fluid pumped through the cooler in a specified time by the transmission oil pump. **The same flow test procedure is used for the drainback valve, main cooler, and auxiliary cooler.**

Cooler And Drainback Valve Flow Test Procedure

(1) Test flow through **drainback valve** as follows:

(a) Add extra quart of ATF Plus to transmission.

(b) Disconnect pressure line at radiator fitting, or at drainback valve and position hose or valve end in one quart test container.

(c) Shift transmission into neutral, run engine at idle speed for 20 seconds, and note flow from valve. Use stopwatch to check test time.

(d) Replace drainback valve if flow is less than one quart in 20 seconds, is intermittent, or does not flow at all.

(e) Connect pressure hose to radiator fitting and proceed to cooler flow test.

(2) Test flow through **main cooler** as follows:

(a) Disconnect cooler return (rear) line at transmission and place it in one quart test container.

(b) Add extra quart of fluid to transmission.

(c) Shift transmission into neutral, run engine at idle speed for 20 seconds, and note flow from valve. Use stopwatch to check test time.

(d) Replace cooler if fluid flow is less than one quart in 20 seconds, is intermittent, or does not flow at all.

(3) If vehicle is equipped with **auxiliary cooler**, test cooler flow as described in step (2).

TRANSMISSION COOLER REVERSE FLUSHING

The flushing procedure applies to standard and auxiliary coolers alike. Although pressure equipment is preferred, reverse flushing can be performed with hand operated equipment as follows.

(1) Disconnect cooler pressure and return lines at transmission (Figs. 34 and 35).

(2) Remove and discard drainback valve. Install fabricated hose and fitting in place of valve.

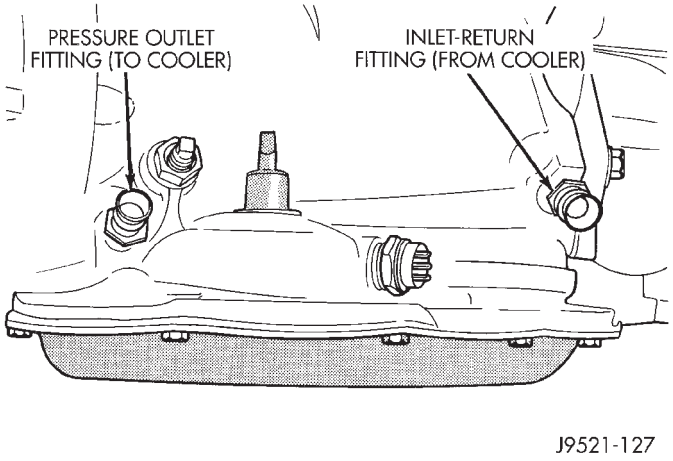

Fig. 34 Cooler Line Fitting Identification (30RH/32RH)

(3) Position drain pan under cooler pressure line to catch material flushed through cooler and lines.

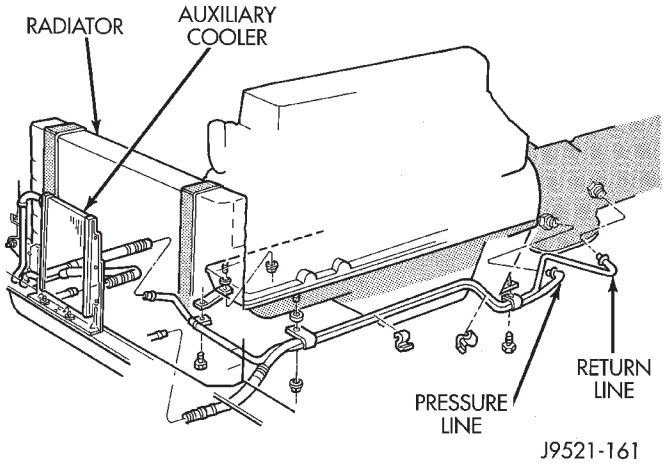

Fig. 35 Cooler Line Routing (YJ)

(4) Reverse flush cooler using hand operated suction gun filled with mineral spirits. Insert gun nozzle (or hose) into cooler return line. Then force mineral spirits into line and through cooler.

(5) Continue reverse flushing until fluid coming out of cooler pressure line is clear. **Replace cooler if fluid cannot be pumped through.**

(6) Clear flushing materials from cooler and lines with short pulses of compressed air. Insert air gun nozzle into cooler return line and continue short air pulses until all fluid is cleared from cooler and lines.

(7) Pump one quart of fresh automatic transmission fluid through cooler and lines before reconnecting lines.

(8) Install new drainback valve in pressure line.

(9) Check and adjust transmission fluid level as described in this section.

30RH/32RH TRANSMISSION REMOVAL AND INSTALLATION

INDEX

page

Converter—Pump Seal—Drive Plate Service 116
Transmission and Converter Installation 117
Transmission and Converter Removal 115

TRANSMISSION AND CONVERTER REMOVAL

(1) Remove fan shroud attaching bolts.

(2) Disconnect transmission fill tube at upper bracket.

(3) Raise vehicle.

(4) Remove inspection cover from converter housing and remove skid plate for access, if necessary.

(5) Remove transmission fill tube and fill tube O-ring.

(6) Remove starter motor.

(7) Mark propeller shafts and axle yokes for alignment reference.

(8) Disconnect propeller shafts at yokes. Secure shafts to frame rails with wire.

(9) Disconnect exhaust pipes at exhaust manifolds, if necessary.

(10) Drain transfer case lubricant, if transfer case will also be serviced.

(11) Disconnect vehicle speed sensor wires.

(12) Disconnect transfer case shift linkage.

(13) Disconnect gearshift cable/linkage and throttle valve cable at transmission levers.

(14) Disconnect transfer case vent hose. Then disconnect indicator switch wires on XJ, or vacuum switch harness on YJ.

(15) Remove wire harness from clips on transfer case.

(16) Remove transfer case attaching nuts and remove transfer case. Use transmission jack or helper to support and remove transfer case.

(17) Disconnect park/neutral position switch wires.

(18) Disconnect and remove crankshaft position sensor (Figs. 1 and 2). Retain sensor bolt (or bolts) for reinstallation.

CAUTION: The crankshaft position sensor can be damaged during transmission removal (or installation) if the sensor is still bolted to the engine block. To avoid damage, remove the sensor before removing the transmission.

(19) Remove wire harnesses from clips/tie straps on transmission.

(20) Remove converter housing access cover and mark drive plate and converter for alignment reference.

(21) Remove bolts attaching converter to drive plate.

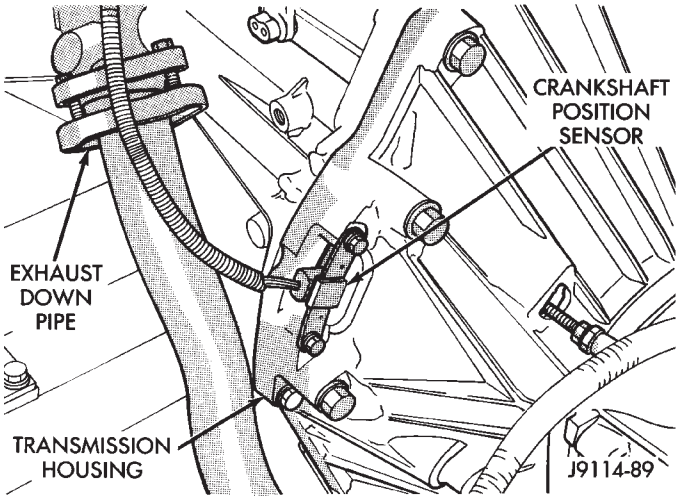

Fig. 1 Crankshaft Position Sensor (2.5L)

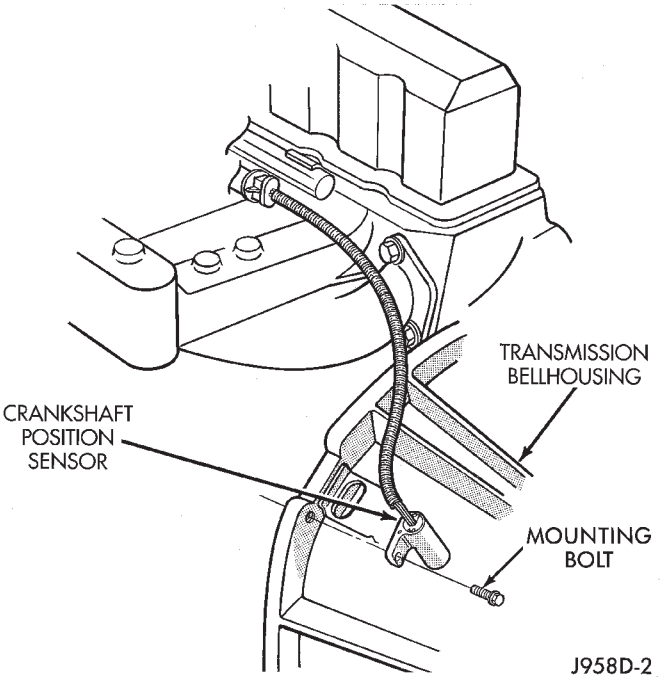

Fig. 2 Crankshaft Position Sensor (4.0L YJ)

(22) Support engine with support stand.

(23) Support transmission with transmission jack. Secure transmission to jack with safety chain.

(24) Remove bolts/nuts attaching cushion and torque arm bracket to skid plate (Fig. 3).

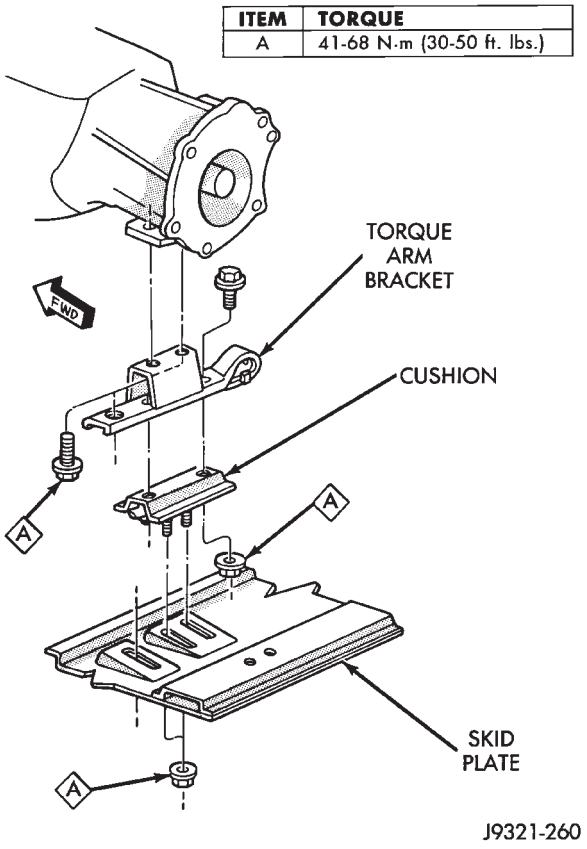

Fig. 3 Transmission Rear Mount

(25) Remove skid plate, or rear crossmember, if equipped.

(26) Lower transmission slightly and disconnect cooler lines at transmission.

(27) Remove bolts attaching transmission converter housing to engine block.

(28) Move transmission and converter rearward until clear of crankshaft.

(29) Hold converter in position and lower transmission until converter housing clears engine.

(30) Remove converter from transmission.

(31) Following components can now be serviced if necessary:

- torque converter
- torque converter drive plate
- oil pump seal
- engine rear core hole plugs
- engine rear oil galley plugs

CONVERTER—PUMP SEAL—DRIVE PLATE SERVICE

Drive Plate

The drive plate can be replaced or removed for service access after the transmission is out of the vehicle (Fig. 4).

CAUTION: On YJ models with a 2.5L engine and 30RH transmission, special bolts are used to attach the driveplate to the crankshaft. These bolts have a smaller hex head for torque converter clearance. DO NOT interchange these bolts with similar size bolts for any reason.

Torque Converter

The torque converter and driveplate are accessible for service after the transmission has been removed (Fig. 4).

The torque converter is not a serviceable part. If the converter is contaminated or damaged in any way, it must be replaced as an assembly. **Do not attempt to flush a converter contaminated by metal or clutch facing particles. Flushing will not remove these contaminants.**

The driveplate is also not serviceable. The driveplate should be replaced if damaged in any way.

On converters or driveplates with a starter ring gear, the ring gear is not replaceable. It will be necessary to replace the converter, or driveplate as an assembly if the gear teeth are damaged.

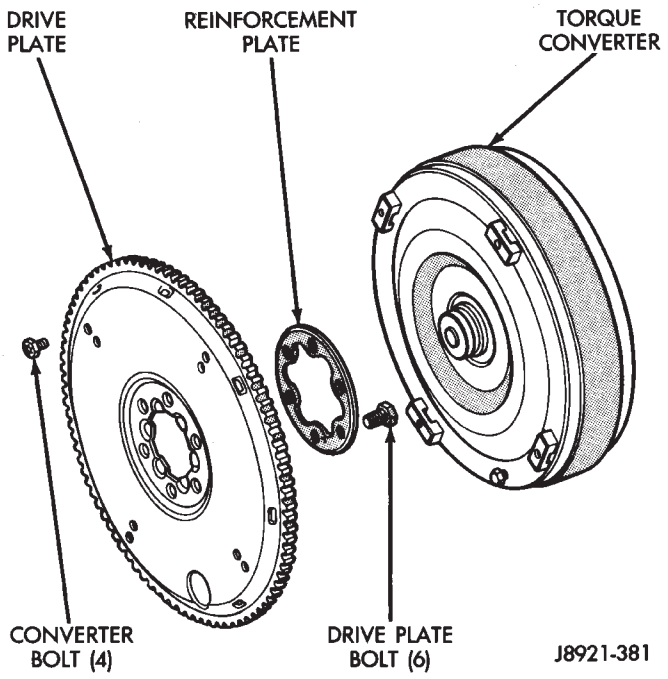

Fig. 4 Typical Converter And Drive Plate

Oil Pump Seal Service

The oil pump seal is accessible and can be replaced after the transmission and torque converter are removed.

Use Special Tool C-3981-B to remove the seal (Fig. 5). To use the tool, first start the tool into the seal by hand. Next, thread the tool into the seal as far as it will go. Use a wrench on the tool hex to turn the tool. Continue tightening until all the tool threads firmly

grip the metal part of the seal. Then tighten the tool puller screw to withdraw the seal from the pump body.

Use Special Tool C-4193-A to install the seal (Fig. 6). Be sure to lubricate the pump seal and converter hub with transmission fluid before installation.

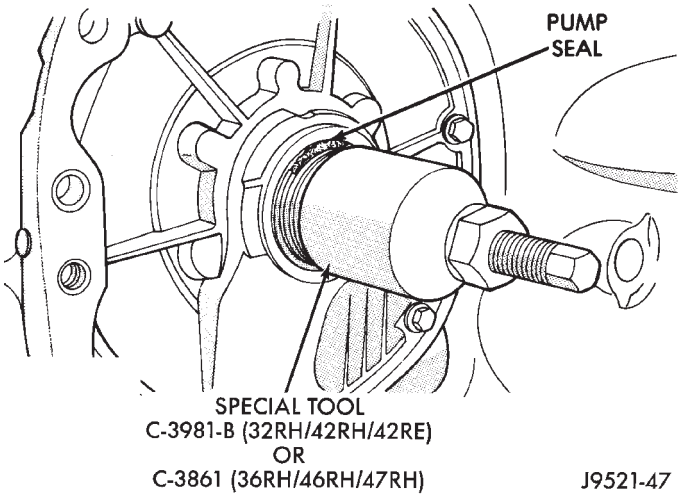

Fig. 5 Pump Seal Removal

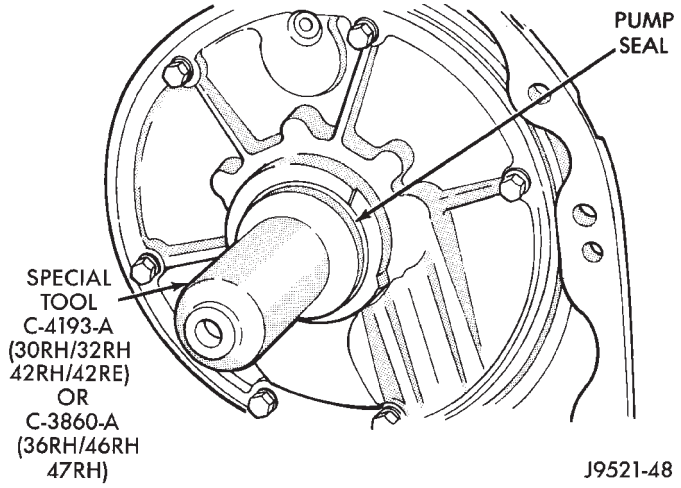

Fig. 6 Pump Seal Installation

TRANSMISSION AND CONVERTER INSTALLATION

CAUTION: If the transmission was repaired to correct a problem that generated sludge and debris, the fluid cooler and lines must be reverse flushed and the torque converter and drainback valve replaced. Sludge and metal or friction particles must be removed from the cooler system before reinstalling the transmission. This avoids re-contaminating the repaired transmission. Failure to flush the system will result in repeat failure and a shop comeback.

(1) Lubricate converter drive hub and pump seal with Mopar ATF Plus transmission fluid. Then install converter. Turn converter back and forth to align drive slots in converter hub with pump gear lugs. Be sure converter is fully seated in pump (Fig. 7).

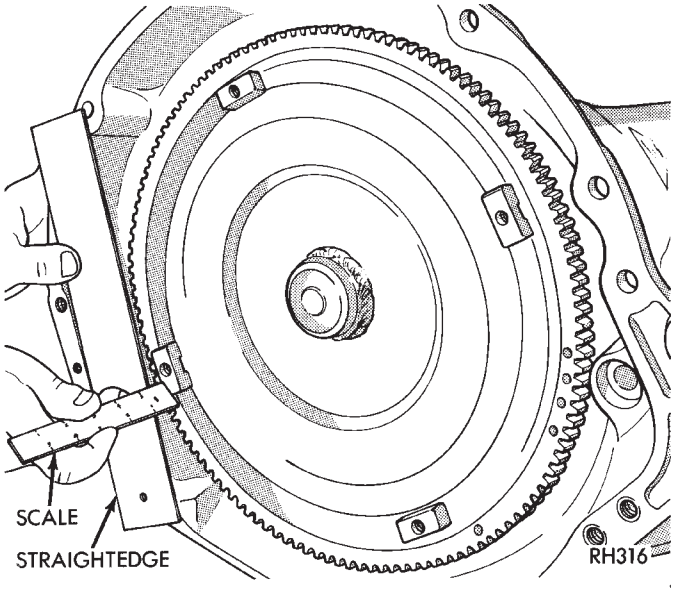

Fig. 7 Checking Torque Converter Seating

(2) Temporarily secure converter with C-clamp or metal strap attached across converter housing.

(3) Position transmission on jack and secure it with safety chains.

(4) Raise transmission and align converter with drive plate.

(5) Move transmission forward. Then raise, lower or tilt transmission to align converter housing with engine block dowels.

(6) Install two transmission attaching bolts. Tighten bolts just enough to hold transmission converter housing in place on block.

(7) Install torque converter attaching bolts. Tighten bolts to following torque.

- 54 N·m (40 ft. lbs.) with 9.5 in. 3-lug converter
- 74 N·m (55 ft. lbs.) with 9.5 in. 4-lug converter
- 74 N·m (55 ft. lbs.) with 10.0 in. 4-lug converter
- 31 N·m (270 in. lbs.) with 10.75 in. 4-lug converter

(8) Install and tighten remaining bolts that attach transmission converter housing to engine block (Fig. 8).

CAUTION: Be sure the converter housing is fully seated on the engine block dowels before tightening any bolts.

(9) Install crankshaft position sensor.

(10) Install transmission fill tube and O-ring (Fig. 5).

(11) Connect transmission cooler lines to fittings. Refer to Figure 9 for cooler line identification.

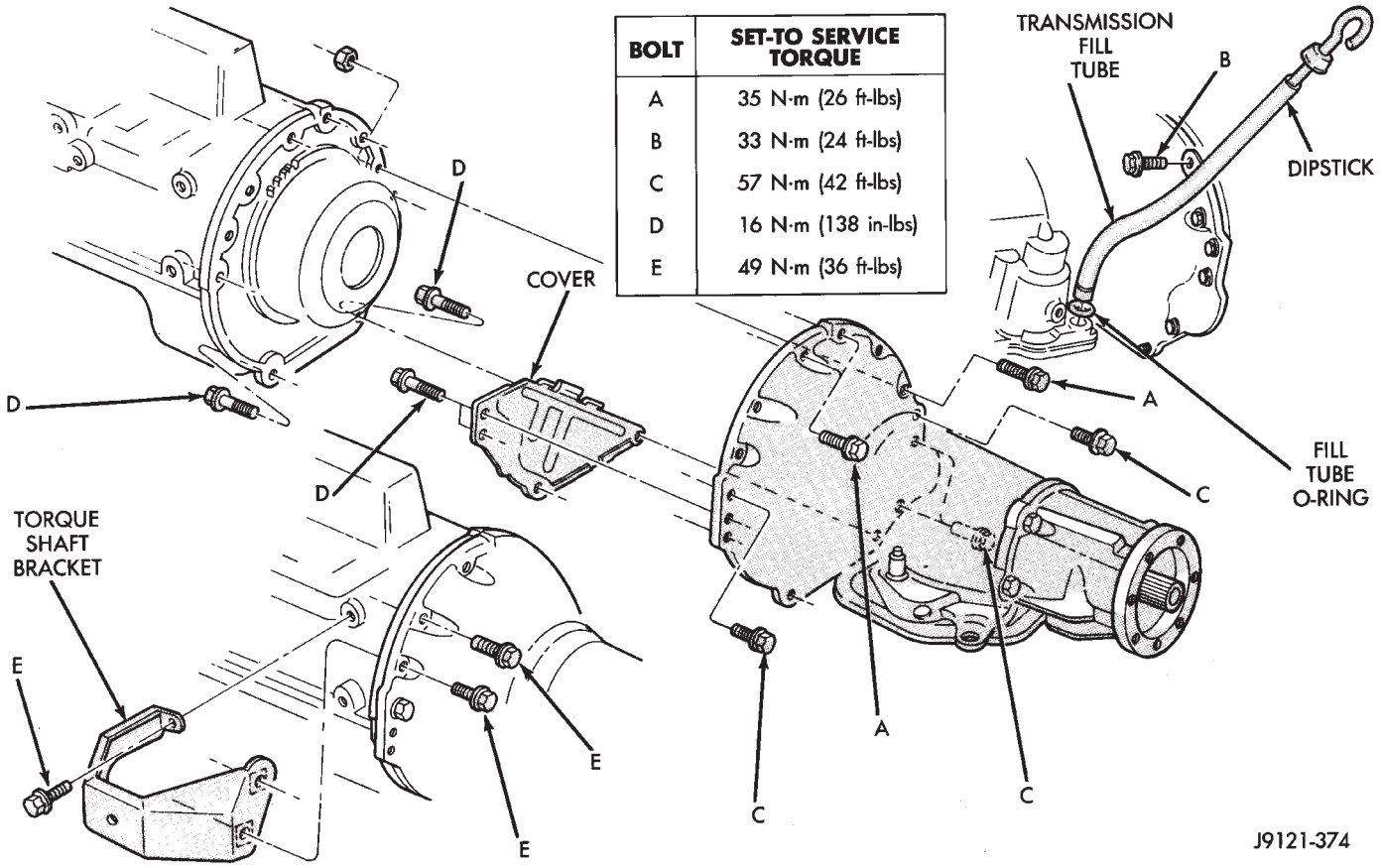

Fig. 8 Transmission Attachment

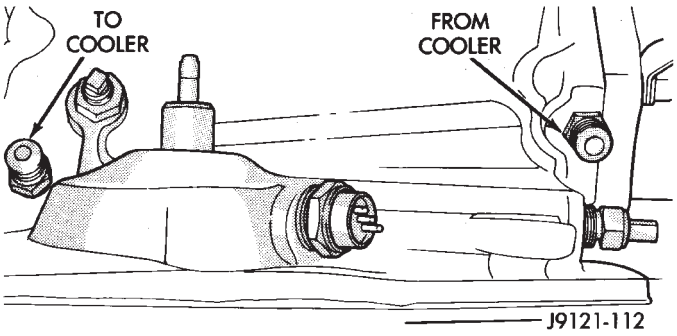

Fig. 9 Transmission Cooler Line Location And Identification

(12) Install transfer case on transmission. Tighten attaching nuts to 47 N·m (35 ft. lbs.) torque if case has 3/8 studs, or 35 N·m (26 ft. lbs.) if case has 5/16 studs.

(13) Install rear crossmember and attach transmission rear support to crossmember.

(14) Remove transmission jack.

(15) Connect vehicle speed sensor wires.

(16) Install inspection cover on converter housing.

(17) Install exhaust pipes and support brackets, if removed.

(18) Install starter motor.

(19) Connect wires to park/neutral position switch.

(20) Connect gearshift and linkage and throttle cable.

(21) Connect transfer case shift linkage.

(22) Connect propeller shafts to transfer case yokes.

(23) Connect front exhaust pipes and catalytic converter support bracket bolts (if removed).

(24) Install skid plate, rear cushion and bracket, if removed.

(25) Fill transfer case to bottom edge of fill plug hole with Mopar Dexron II.

(26) Lower vehicle and fill transmission to correct level with ATF Plus, type 7176 fluid.

(27) Install fan shroud and bolts (if removed).

(28) Check and adjust gearshift cable or linkage if necessary. Then check and adjust throttle valve cable if necessary.

30RH/32RH TRANSMISSION OVERHAUL

INDEX

	page
Adapter/Extension Housing Inspection and Park Lock Component Overhaul	127
Front Clutch Overhaul	134
Front Servo and Band Overhaul	146
Governor and Park Gear Overhaul	127
Oil Pump Overhaul	131
Overhaul Service Information	125
Overrunning Clutch—Low-Reverse Drum—Rear Support Overhaul	125
Planetary Gear Train Overhaul	141
Rear Clutch Overhaul	138
Rear Servo and Band Overhaul	146
Transmission Assembly and Adjustment Procedures	155
Transmission Assembly Tips	155
Transmission Case Cleaning and Inspection	125
Transmission Disassembly	119
Valve Body Assembly and Adjustment	153
Valve Body Disassembly and Inspection	147

TRANSMISSION DISASSEMBLY

(1) Clean transmission exterior with steam gun or with solvent. Wear eye protection during cleaning process.

(2) Remove throttle and shift levers from valve body manual shaft and throttle lever shaft.

(3) Mount transmission in repair stand C-3750-B (Fig. 1).

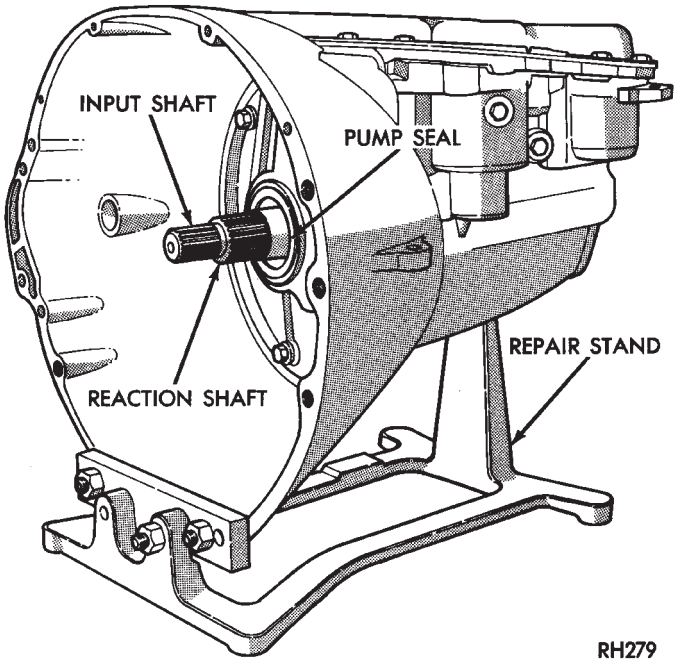

Fig. 1 Transmission Mounted On Typical Repair Stand

(4) Remove nuts attaching adapter, or extension housing to transmission case.

(5) Remove adapter/extension housing and gasket (Fig. 2).

(6) Remove rear bearing and snap ring, if equipped.

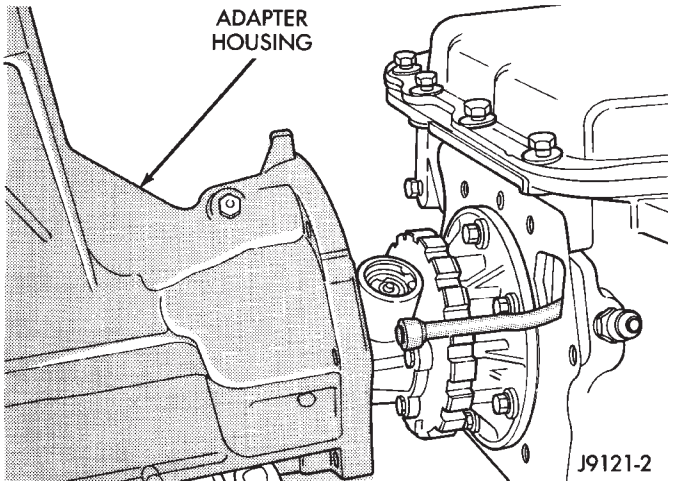

Fig. 2 Adapter Housing Removal/Installation (4 x 4 Models)

(7) Remove park/neutral position switch and seal (Fig. 3).

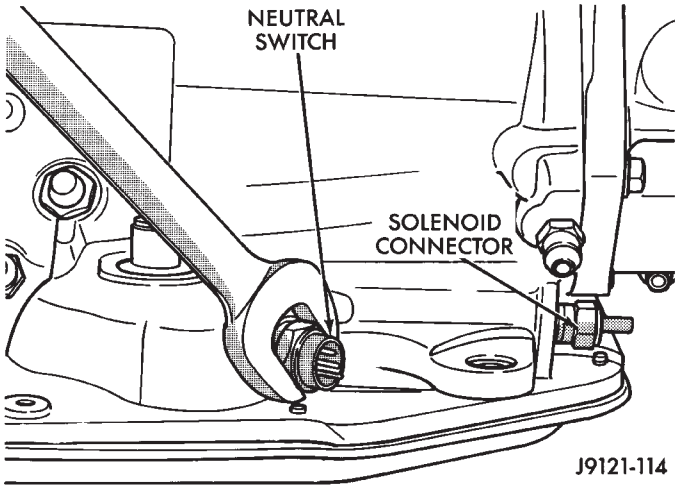

Fig. 3 Park/Neutral Position Switch Removal/ Installation

(8) Remove oil pan bolts and remove pan and gasket (Fig. 4).

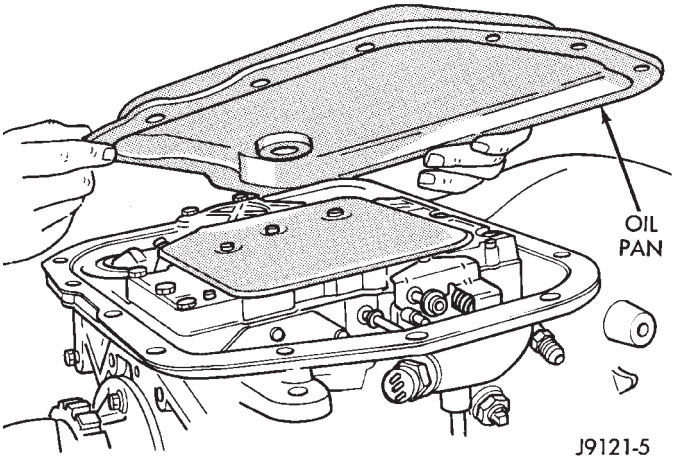

Fig. 4 Oil Pan Removal/Installation

(9) Remove hex head valve body attaching bolts (Fig. 5).

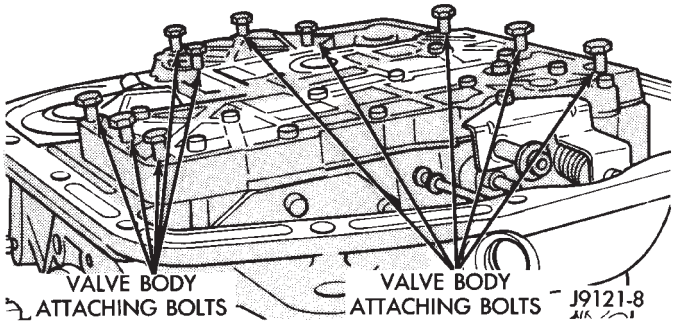

Fig. 5 Valve Body Attaching Bolt Locations (Typical)

(10) Disconnect solenoid wire from case connector (Fig. 6).

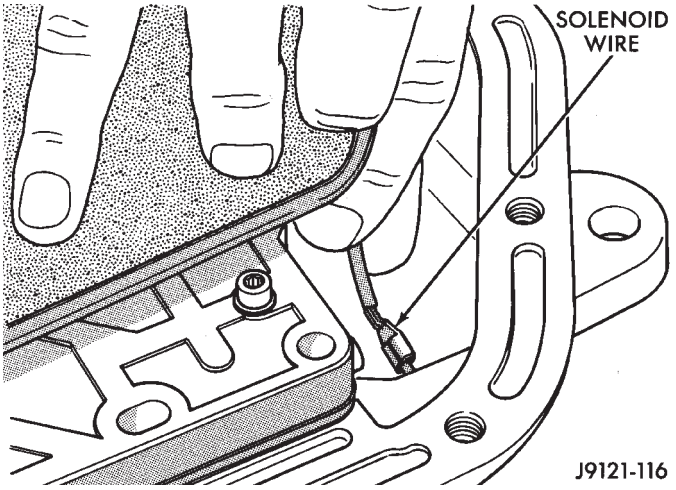

Fig. 6 Solenoid Wire Connection

(11) Lift valve body upward, guide park rod out of case opening and remove valve body (Fig. 5).

(12) Remove accumulator spring and piston (Fig. 8).

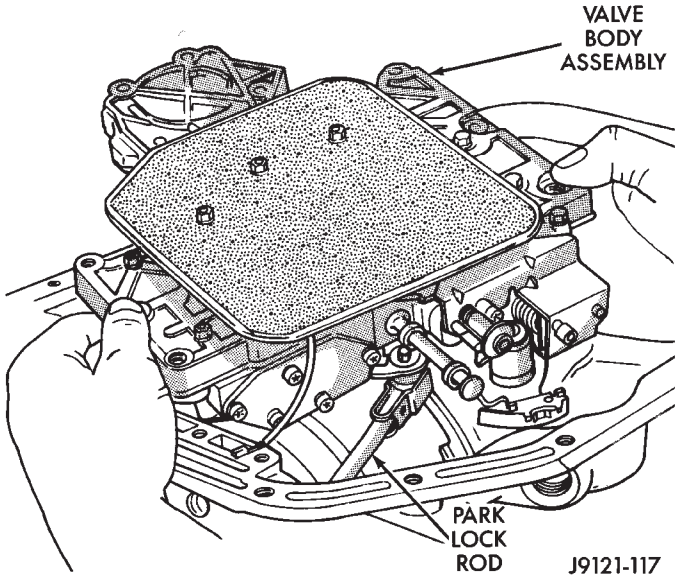

Fig. 7 Valve Body Removal/Installation

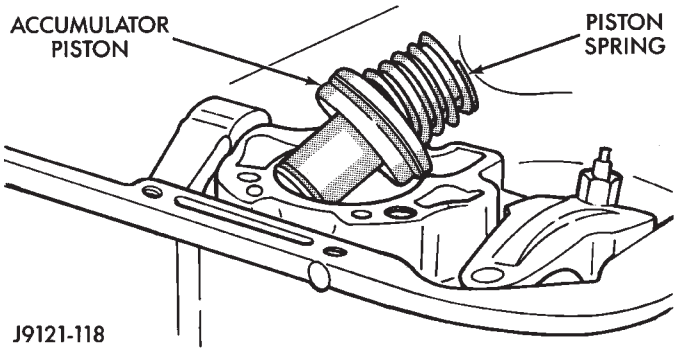

Fig. 8 Removing/Installing Accumulator Piston And Spring

(13) Remove front band pivot pin access plug (Fig. 9). Plug is accessible through converter housing. Use 1/4 inch drive extension to remove plug as shown.

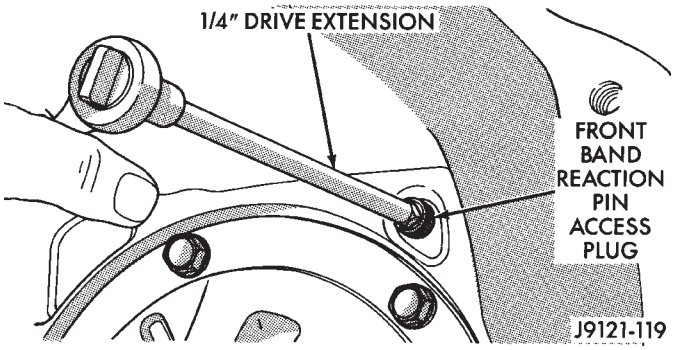

Fig. 9 Removing/Installing Front Band Pivot Pin Access Plug

(14) Loosen front band adjusting screw locknut 4-5 turns. Then tighten band adjusting screw until band is tight around front clutch retainer. This prevents front/rear clutches from coming out with pump and possibly damaging clutch or pump components.

(15) Remove oil pump bolts.

(16) Thread bolts in Slide Hammer Tools C-3752 into threaded holes in pump body flange (Fig. 10).

(17) Bump slide hammer weights outward to remove pump and reaction shaft support assembly from case (Fig. 10).

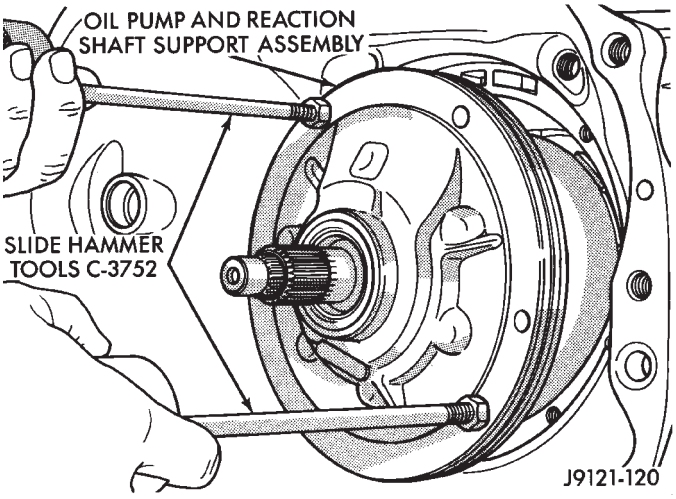

Fig. 10 Removing Oil Pump/Reaction Shaft Support

(18) Loosen front band adjusting screw until band is completely loose.

(19) Squeeze front band together and remove band strut (Fig. 11).

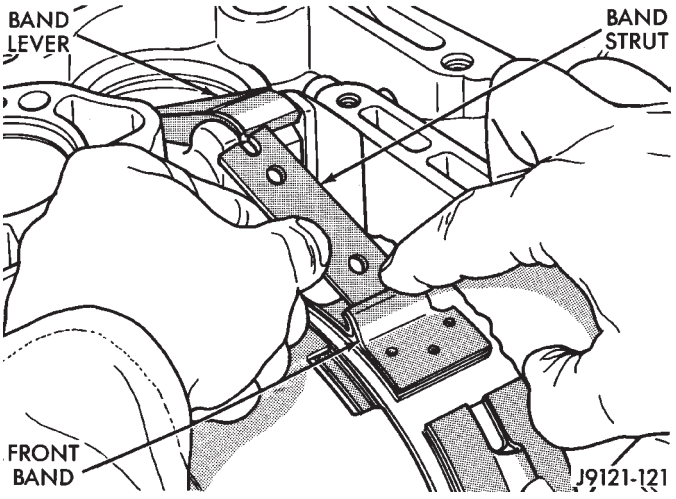

Fig. 11 Removing/Installing Front Band Strut

(20) Remove front band reaction pin with pencil magnet. Pin is accessible from converter housing side of case (Fig. 12).

(21) Remove front band lever (Fig. 13)

(22) Slide front band rearward and onto driving shell. Band will not be removed until after front/rear clutch removal.

(23) Remove front and rear clutch units as assembly. Grasp input shaft, hold clutch units together and remove them from case (Fig. 14).

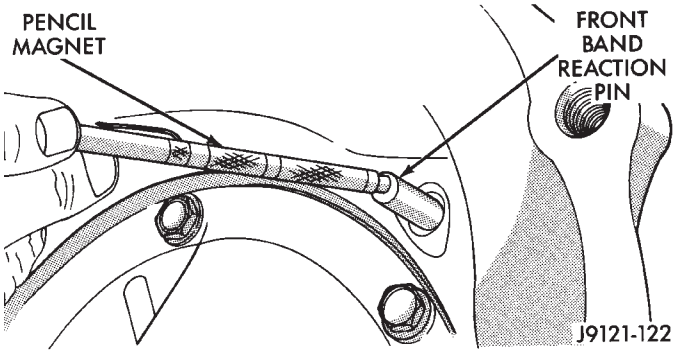

Fig. 12 Removing Front Band Reaction Pin

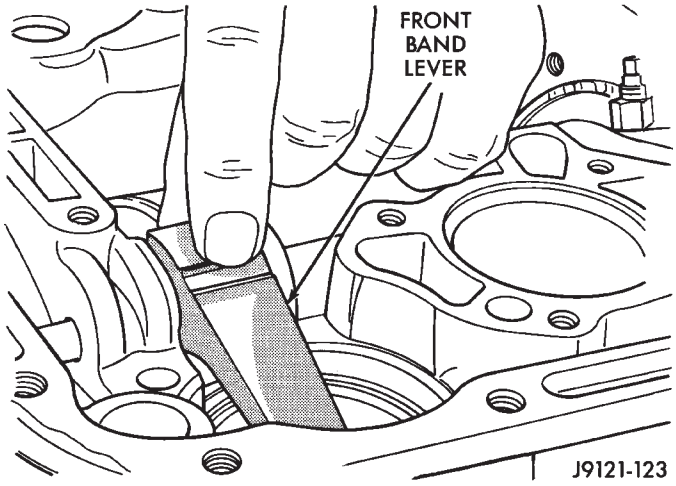

Fig. 13 Removing/Installing Front Band Lever

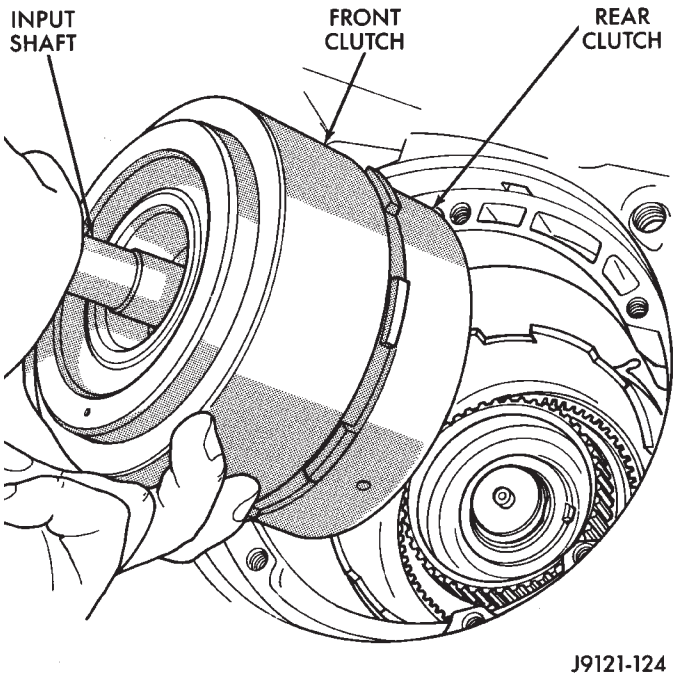

Fig. 14 Removing Front/Rear Clutch Assemblies

(24) Lift front clutch off rear clutch (Fig. 15). Set clutch units aside for disassembly, cleaning and overhaul.

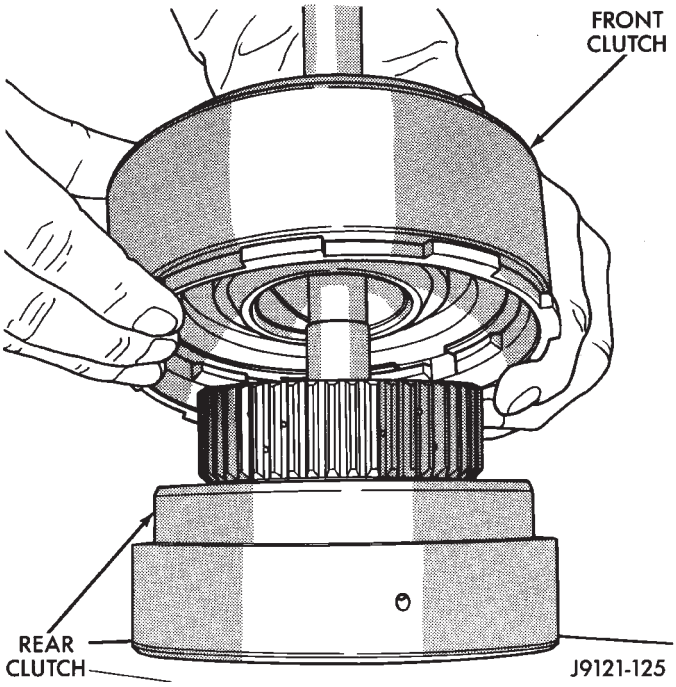

Fig. 15 Separating Front/Rear Clutch Assemblies

(25) Remove output shaft thrust washer from output shaft (or from rear clutch hub).

(26) Remove output shaft thrust plate from output shaft hub (Fig. 16).

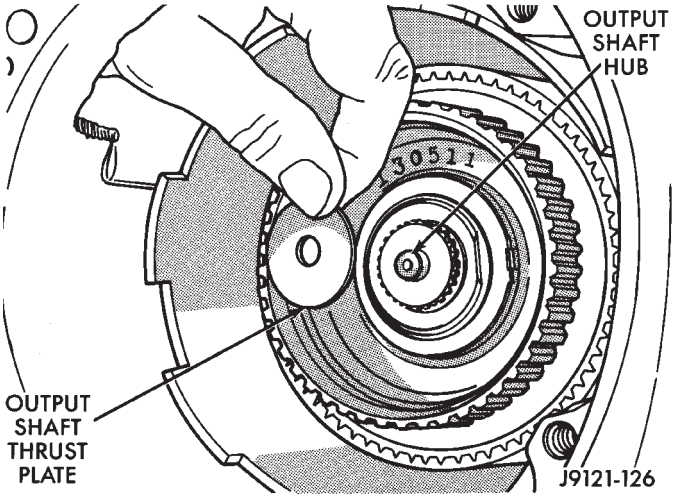

Fig. 16 Removing/Installing Output Shaft Thrust Plate

(27) Slide front band off driving shell (Fig. 17) and remove band from case.

(28) Remove E-clip from one end of governor valve shaft and remove valve and shaft from governor body (Fig. 19). Reinstall E-clip on shaft to avoid losing it.

(29) Remove thick snap, thrust washer and thin snap ring that retain governor body and park gear on shaft (Fig. 19).

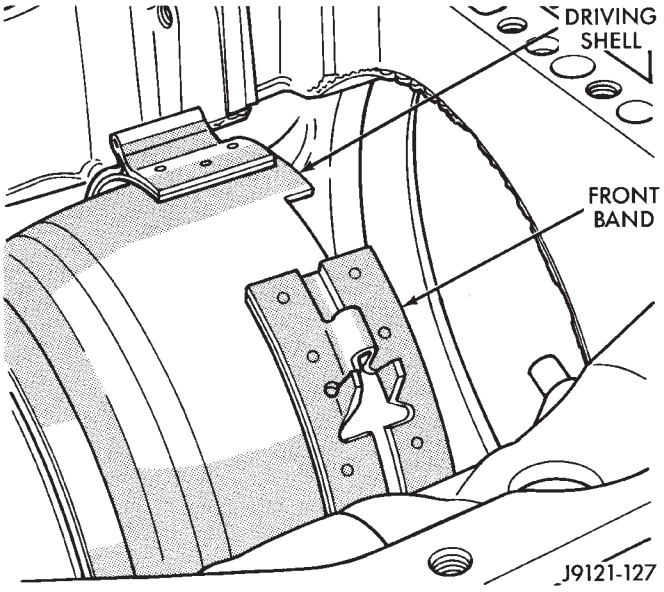

Fig. 17 Front Band Removal/Installation

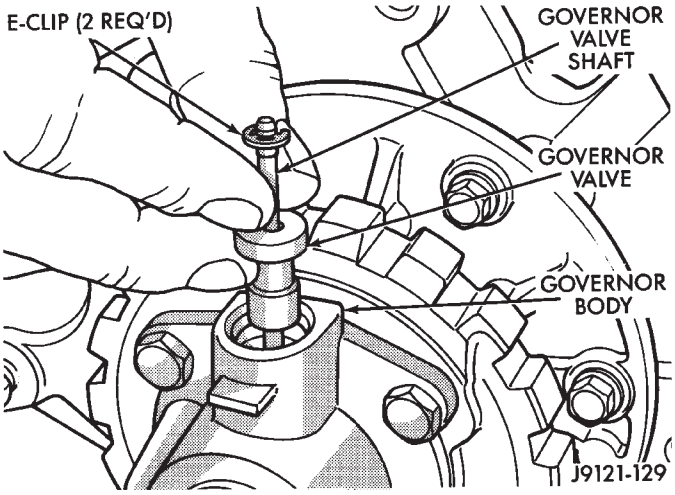

Fig. 18 Removing Governor Valve And Shaft

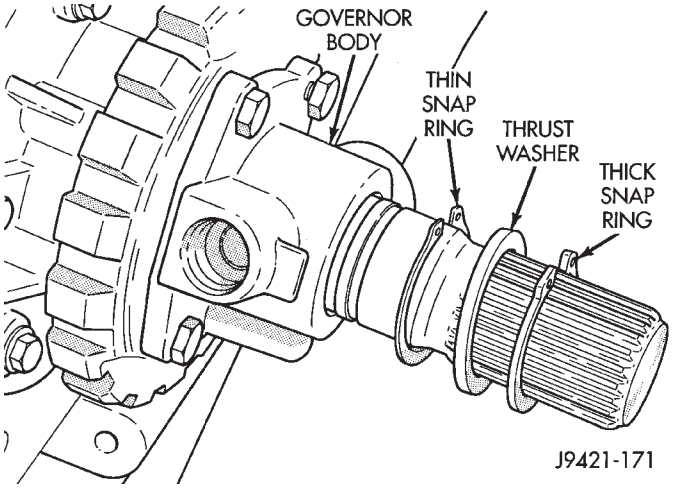

Fig. 19 Governor Body/Park Gear Attachment

(30) Loosen bolts attaching governor body to park gear.

(31) Mark position of governor body on park gear with center punch or scriber.

(32) Remove governor body and park gear as assembly (Fig. 20). Work park gear out of rear support and slide assembly off output shaft.

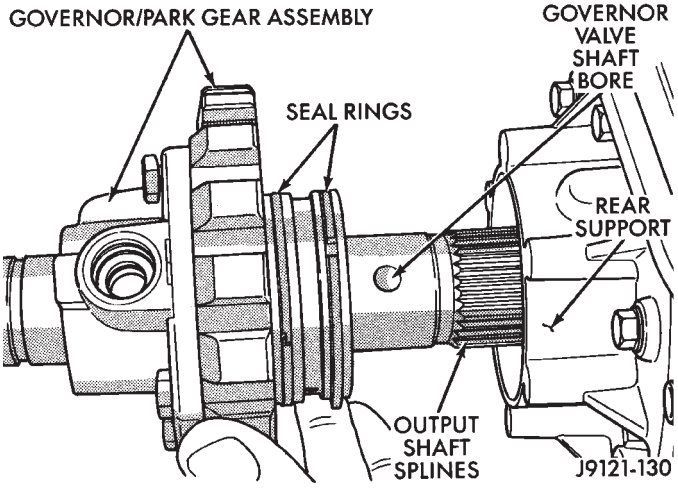

Fig. 20 Removing/Installing Governor Body And Park Gear

(33) Remove planetary geartrain as assembly (Fig. 21). Support geartrain with both hands during removal. Do not allow machined surfaces on output shaft to become nicked or scratched.

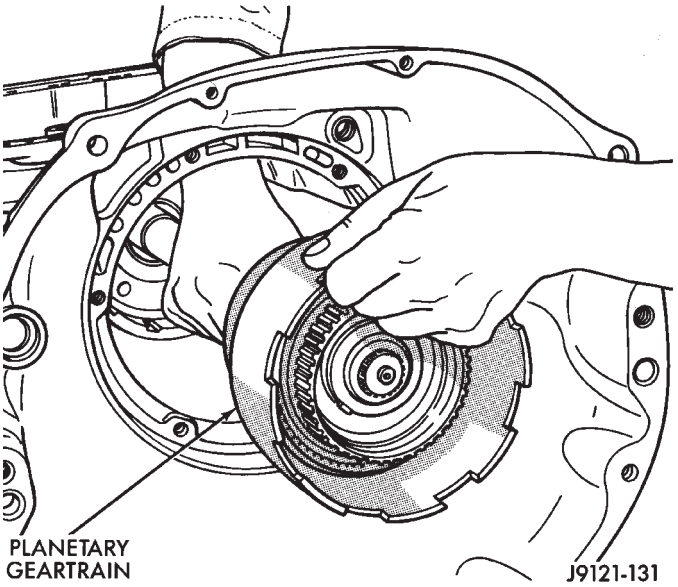

Fig. 21 Planetary Geartrain Removal

(34) Loosen rear band adjusting screw until band is fully released and does not grip low reverse drum.

(35) Remove snap ring that secures low-reverse drum to rear support (Fig. 22).

(36) Remove rear band lever pins as follows:

(a) On 30RH transmission, rear band has only one pivot pin. Remove pin with parallel jaw snap ring pliers (Fig. 23). Spread plier jaws in pin bore to grip pin. Then remove pin with a twist and pull motion.

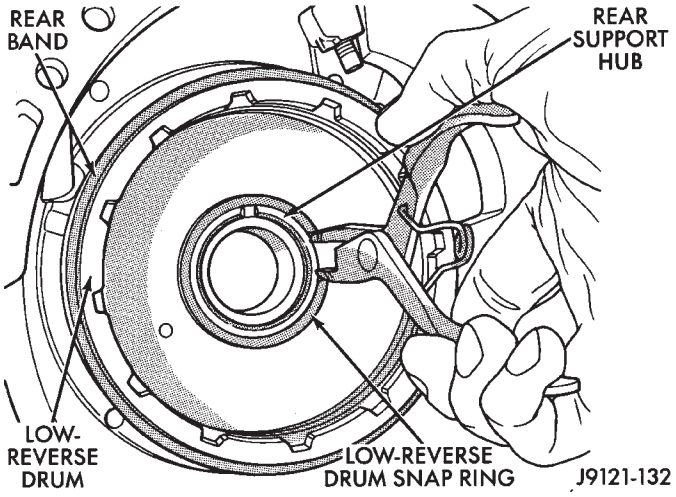

Fig. 22 Removing Low-Reverse Drum Snap Ring

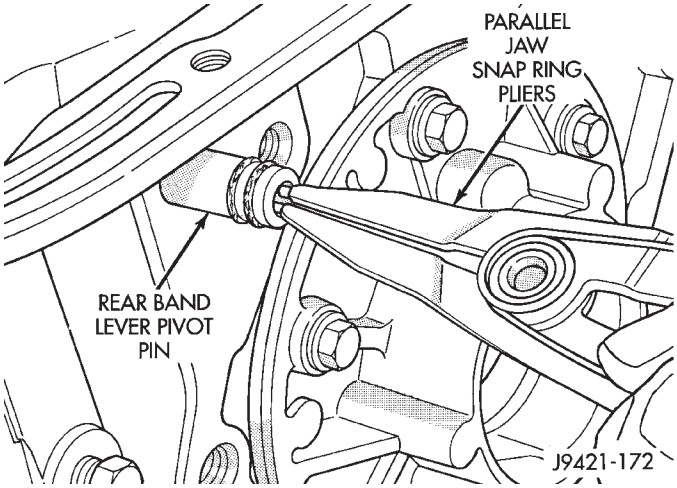

Fig. 23 Removing Rear Band Lever Pivot Pin (30RH)

(b) On 32RH transmission, rear band has two pins. Remove pivot pin and reaction pin with parallel jaw snap ring pliers (Fig. 24).

(37) Remove rear band lever, link and strut.

(38) Mark position of rear support for assembly reference (Fig. 25). Use scriber or center punch to mark case and support.

(39) Remove rear support bolts and remove support from low-reverse drum and case (Fig. 26). Keep rear support bolts together for assembly reference.

(40) Remove bolts attaching overrunning clutch cam to case (Fig. 27).

(41) Remove low-reverse drum and overrunning clutch as assembly. Slide drum and clutch through rear band and out of case. Set drum and clutch assembly aside for cleaning and inspection.

(42) Remove rear band and link from case.

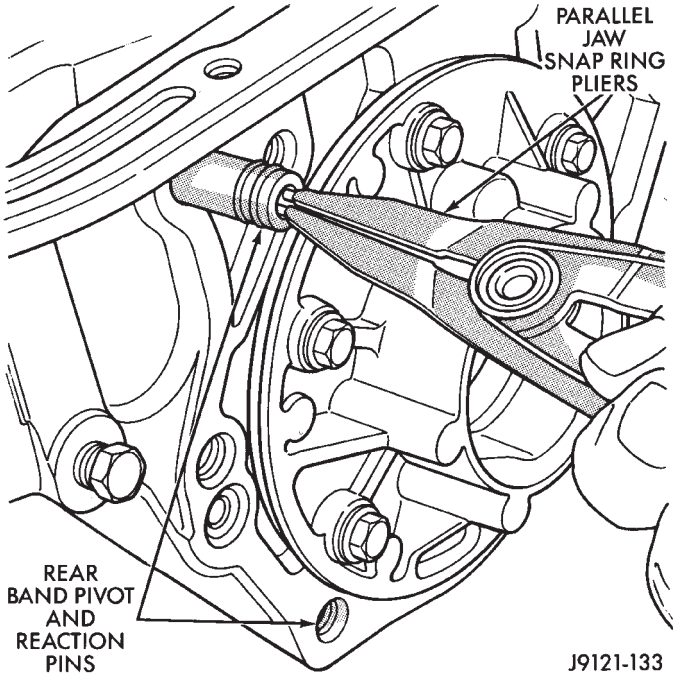

Fig. 24 Removing Rear Band Pivot And Reaction Pins (32RH)

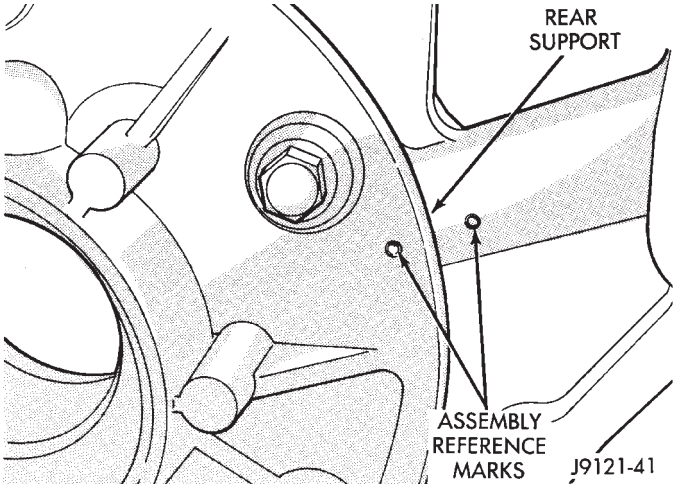

Fig. 25 Marking Rear Support For Assembly Reference

(43) Compress front servo rod guide about 3 mm (1/8 in.) with a large C-clamp and tool C-4470, or Compressor Tool C-3422-B (Fig. 28).

(44) Remove front servo rod guide snap ring (Fig. 28). **Exercise caution when removing snap ring. Servo bore can be scratched or nicked if care is not exercised.**

(45) Remove compressor tools and remove front servo rod guide, spring and servo piston.

(46) Compress rear servo spring retainer about 1.5 mm (1/16 in.) with C-clamp and Tool C-4470 or SP-5560 (Fig. 29). Valve Spring Compressor C-3422-B can also be used to compress spring retainer.

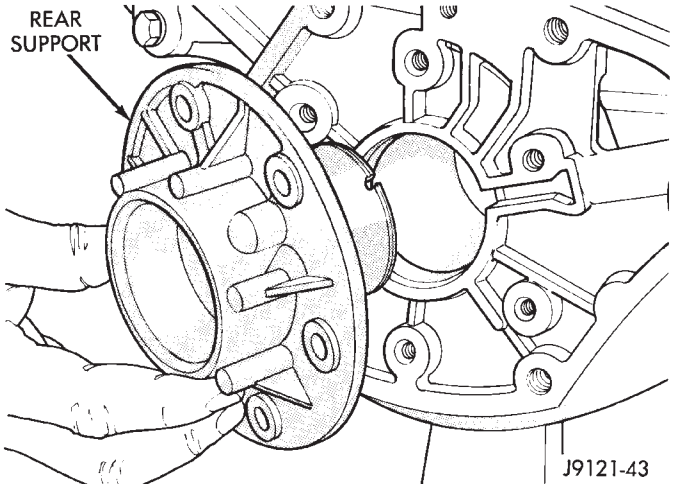

Fig. 26 Removing Rear Support

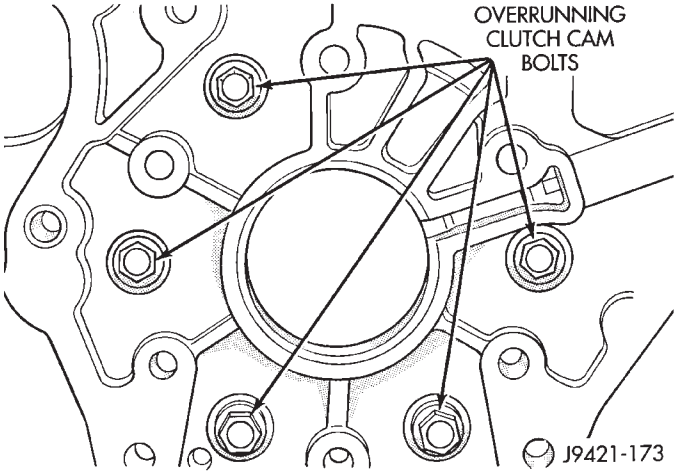

Fig. 27 Overrunning Clutch Cam Bolt Locations

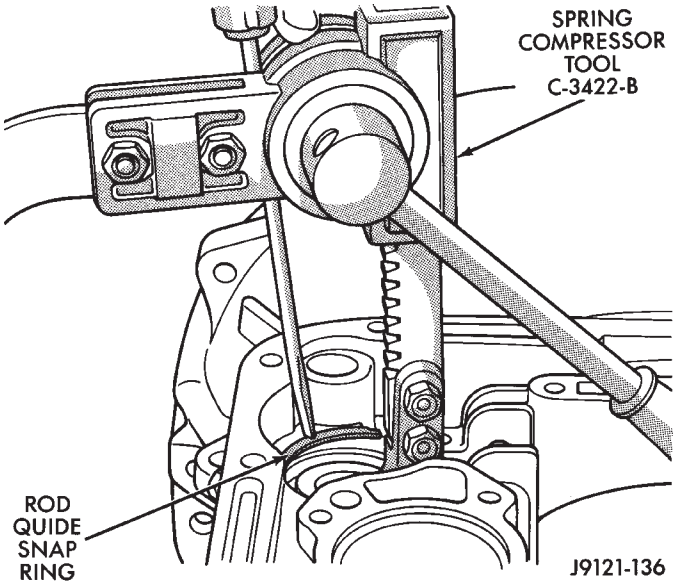

Fig. 28 Compressing Front Servo Rod Guide

(47) Remove rear servo spring retainer snap ring. Then remove compressor tools and remove rear servo spring and piston.

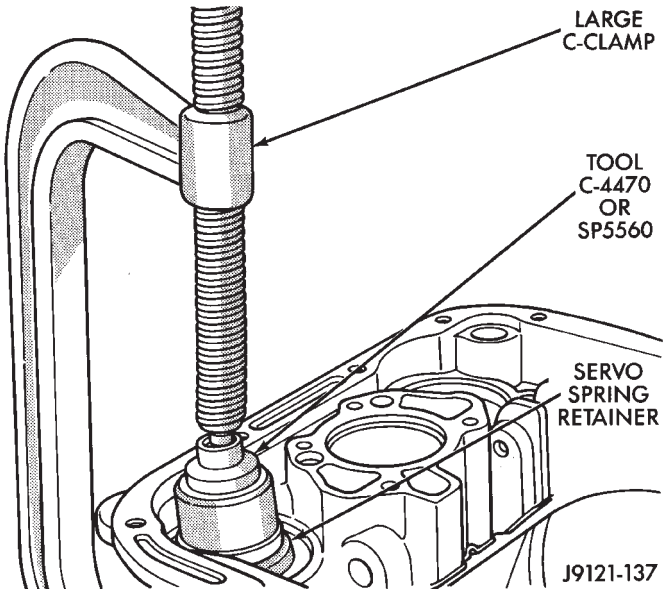

Fig. 29 Compressing Rear Servo Spring

OVERHAUL SERVICE INFORMATION

Inspect the transmission bushings during overhaul. Bushing condition is important as severely worn, or scored bushings contribute to low pressures, clutch slip and accelerated wear of other components. **However, do not replace bushings as a matter of course. Replace bushings only when they are actually worn, or scored.**

Use recommended tools to replace bushings. The tools are sized and designed to remove, install and seat bushings correctly. The bushing replacement tools are included in Bushing Tool Set C-3887-B or C-3887-J. The bushing tools are manufactured by Miller Tool Co. and is available through the dealer tool program.

Pre-sized service bushings are available for replacement purposes. Only the sun gear bushings are not serviced. Replace the gear as an assembly if the bushings are worn, or scored.

Heli-Coil inserts are recommended for repairing damaged, stripped or worn threads in aluminum parts. These inserts are available from most automotive jobbers. Stainless steel inserts are preferred.

The use of crocus cloth is permissible where necessary. When used on valves, use care to avoid rounding off sharp edges. Sharp edges are vital as they prevent foreign matter from getting between the valve and valve bore.

Do not reuse oil seals, gaskets, seal rings, or O-rings during overhaul. Replace these parts as a matter of course. Also do not reuse snap rings or E-clips that are bent or distorted. Replace these parts as well.

Lubricate transmission parts with Mopar ATF Plus, Type 7176 transmission fluid during overhaul and assembly.

Use petroleum jelly to hold parts like thrust washers in place during assembly. Use Mopar Door Ease, Ru-Glyde, or similar products to lubricate piston seals and O-rings to ease installation. Petroleum jelly can also be used to prelubricate parts during reassembly if desired.

TRANSMISSION CASE CLEANING AND INSPECTION

Clean the case in a solvent tank. Flush the case bores and fluid passages thoroughly with solvent. Use compressed air to dry the case and clear the fluid passages. Be sure all solvent is removed from the case as well.

Do not use shop towels or rags to dry the case (or any other transmission component) unless they are made from lint-free materials. Lint will readily adhere to case surfaces and transmission components and will circulate throughout the transmission after assembly. A sufficient quantity of lint can block fluid passages and interfere with valve body operation.

Inspect the case for cracks, porous spots, worn bores, or damaged threads. Damaged threads can be repaired with Helicoil thread inserts. However, the case will have to be replaced if it exhibits any type of damage or wear.

Lubricate the front band adjusting screw threads with petroleum jelly and thread the screw part-way into the case. Be sure the screw turns freely.

Remount the case in a repair stand after cleaning and inspection.

OVERRUNNING CLUTCH—LOW-REVERSE DRUM—REAR SUPPORT OVERHAUL

DISASSEMBLING OVERRUNNING CLUTCH/ LOW-REVERSE DRUM

If the clutch assembly came out with the low-reverse drum, thread two clutch cam bolts into the cam. Then lift the cam out of the drum with the bolts (Fig. 30). Rotate the cam back and forth to ease removal if necessary. Remove the clutch roller and spring assembly from the race afterward.

CLEANING AND INSPECTION

Clean the overrunning clutch assembly, clutch cam, low-reverse drum and rear support in solvent. Dry them with compressed air after cleaning.

Inspect condition of each clutch part after cleaning. Replace the overrunning clutch roller and spring assembly if any rollers or springs are worn or damaged, or if the roller cage is distorted, or damaged. Replace the cam if worn, cracked or damaged.

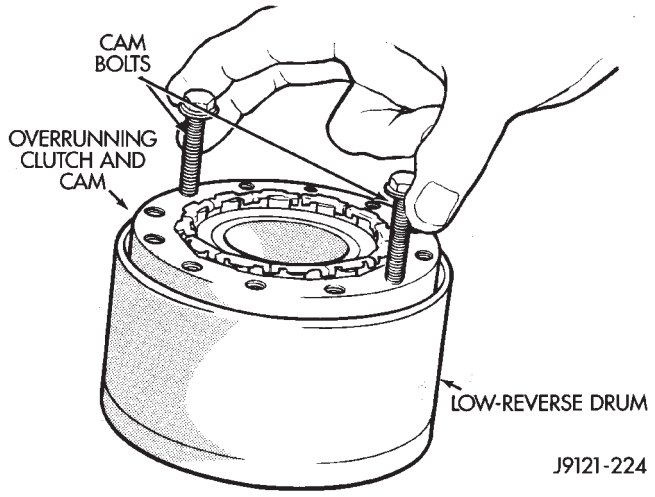

Fig. 30 Removing Overrunning Clutch From Low-Reverse Drum

Replace the low-reverse drum if the clutch race, roller surface or inside diameter is scored, worn or damaged. **Do not remove the clutch race from the low-reverse drum under any circumstances. Replace the drum and race as an assembly if either component is damaged.**

Examine the rear support carefully for wear, cracks, scoring or other damage. Be sure the support hub is a snug fit in the case and drum. Replace the support if worn or damaged.

ASSEMBLING OVERRUNNING CLUTCH/LOW-REVERSE DRUM

(1) Assemble clutch rollers and springs in retainer if necessary (Fig. 31).

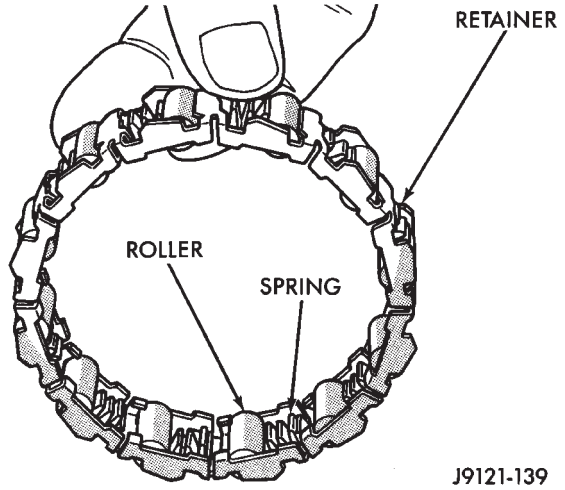

Fig. 31 Overrunning Clutch Rollers, Springs, Retainer

(2) Install overrunning clutch roller, spring and retainer assembly in clutch cam (Fig. 32).

(3) Temporarily assemble and check overrunning clutch operation as follows:

(a) Assemble cam and clutch.

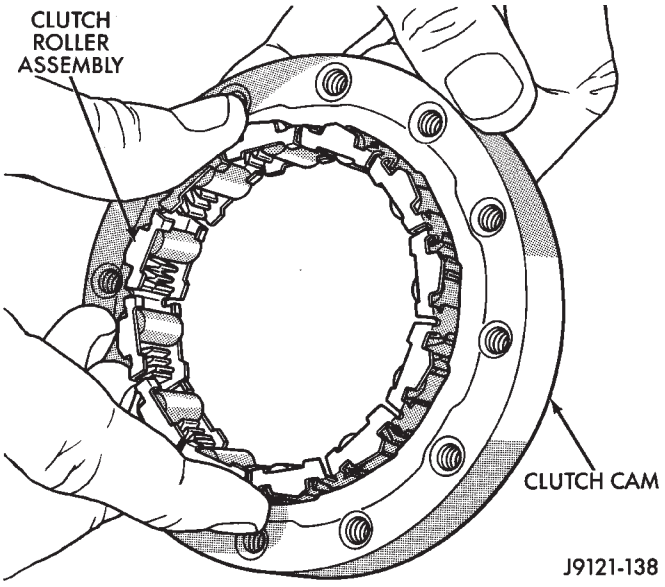

Fig. 32 Assembling Overrunning Clutch And Cam

(b) Install clutch assembly on low-reverse drum with twisting motion (Fig. 33).

(c) Install drum-clutch assembly in case and install clutch cam bolts.

(d) Install rear support and support attaching bolts.

(e) Check low-reverse drum rotation. **Drum should rotate freely in clockwise direction and lock when turned in counterclockwise direction (as viewed from front of case).**

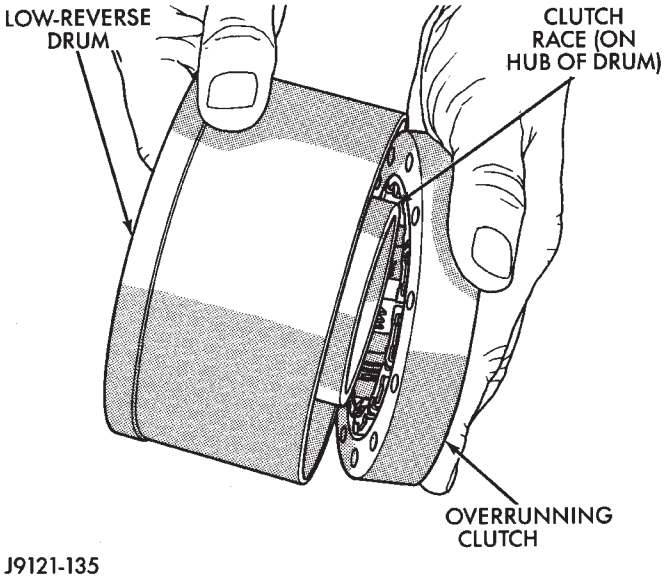

Fig. 33 Temporary Assembly Of Clutch And Drum To Check Operation

(4) Note component position for assembly reference. Bolt holes in clutch cam are countersunk on one side, Be sure this side of cam will face rearward when installed (Fig. 34).

(5) Remove rear support, overrunning clutch and low-reverse drum. Set components aside for final assembly. **If overrunning clutch will be installed before final assembly, install cam only as described in Transmission Assembly And Adjustment section. Clutch cam must be properly indexed in case to fit and operate properly.**

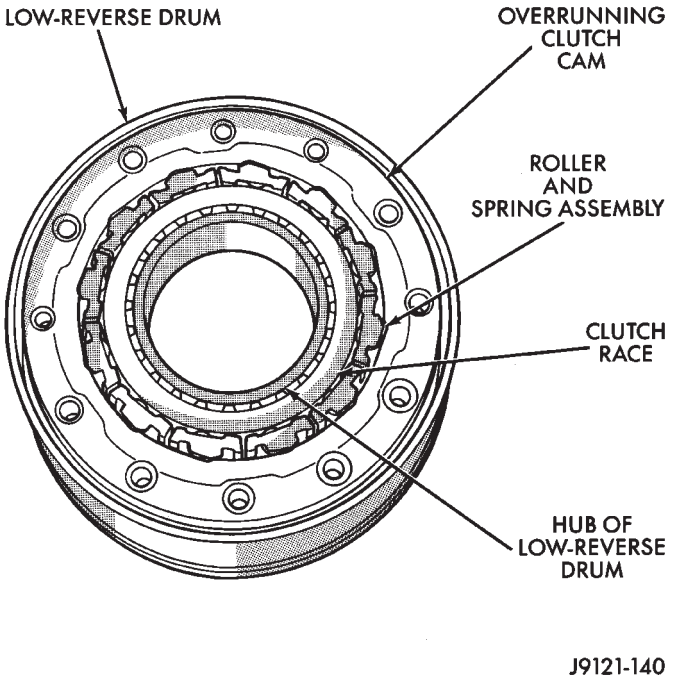

Fig. 34 Assembled Overrunning Clutch Components

ADAPTER/EXTENSION HOUSING INSPECTION AND PARK LOCK COMPONENT OVERHAUL

Clean the housing and park lock components in solvent and dry them with compressed air.

Inspect the output shaft bearing in the housing (Fig. 35). Replace the bearing if worn, damaged, or noisy.

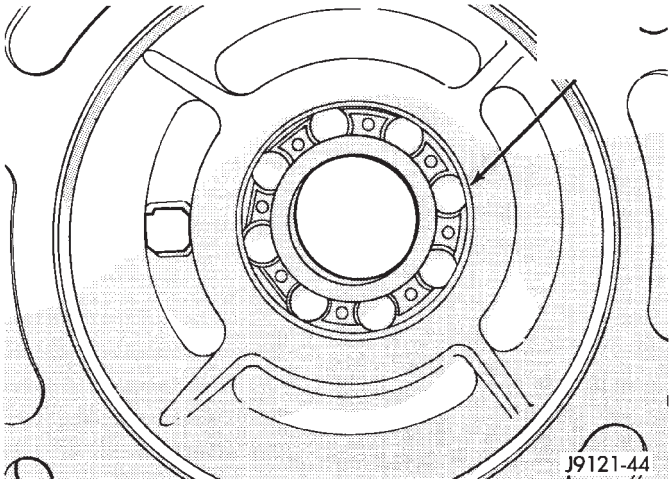

Fig. 35 Adapter Housing Bearing (4 x 4 Models)

Examine the park lock components. If replacement is necessary, remove the shaft with parallel jaw snap ring pliers (Fig. 36) and remove the sprag and spring. Then remove the spring clip and reaction plug (Fig. 37).

Compress the reaction plug spring clip only enough to remove or install it. The clip is easily distorted if overcompressed. Replace the clip if it becomes bent or distorted. Do not straighten and reuse the clip if this occurs.

Be sure a replacement sprag is installed so the sprag locking lug will face the park gear. Also be sure the spring is correctly positioned as shown (Fig. 38). **The sprag may not retract if the spring is improperly installed.**

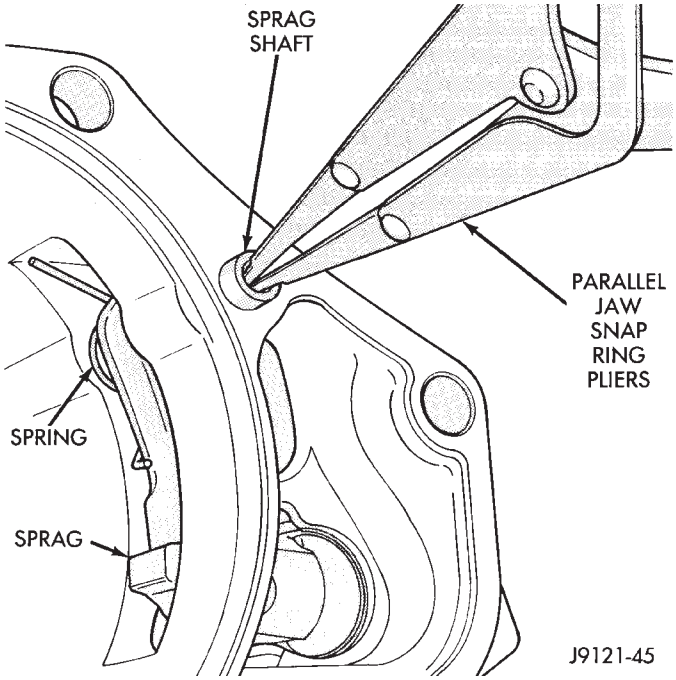

Fig. 36 Park Sprag, Shaft And Spring Removal

GOVERNOR AND PARK GEAR OVERHAUL

GOVERNOR/PARK GEAR DISASSEMBLY

(1) Remove bolts attaching governor body to park gear; then separate body from gear.

(2) Remove cone shaped filter from park gear (Fig. 39).

(3) Remove snap ring and retainer washer that secure governor weight assembly in body. Use Miller C-3915 Internal Pliers to remove snap ring (Fig. 40).

(4) Remove governor weight assembly from governor body bore.

(5) On 30RH, disassemble **two-stage** governor weight as follows:

(a) Position weight assembly on suitable size socket (Fig. 41).

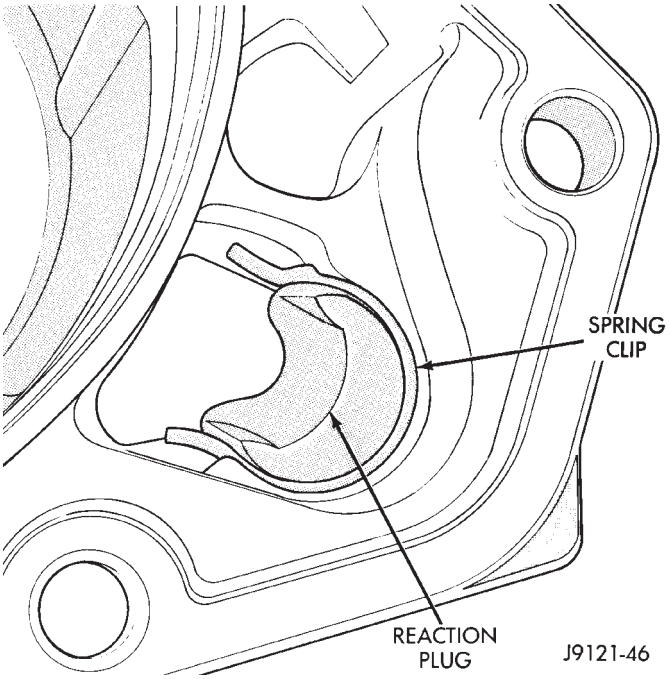

Fig. 37 Park Sprag Reaction Plug And Spring Location

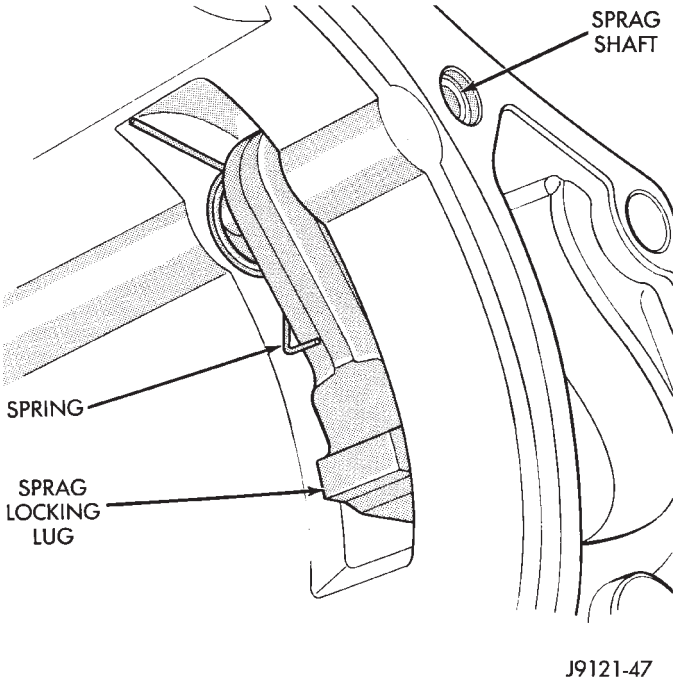

Fig. 38 Correct Position Of Sprag And Spring

(b) Push inner weight downward with nut driver and remove inner weight snap ring. Use Miller Internal Snap Ring Pliers C-3915 to remove ring (Fig. 41).

(c) Remove inner weight and spring from outer weight.

(6) On 32RH, disassemble **three-stage** governor weight as follows:

(a) Position intermediate weight on suitable size socket (Fig. 42).

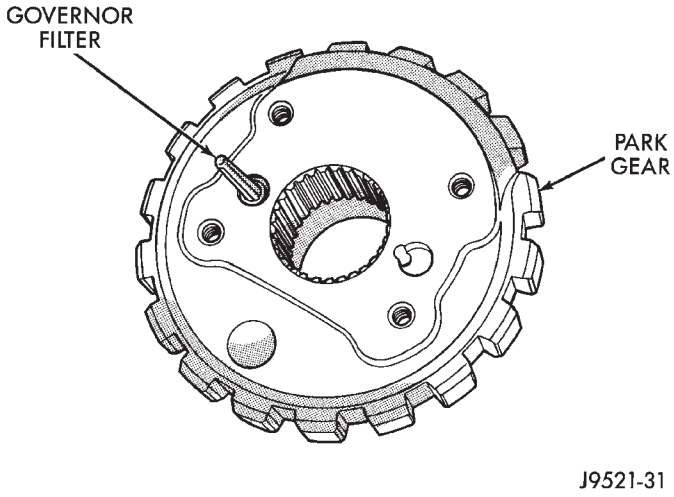

Fig. 39 Governor Filter Position

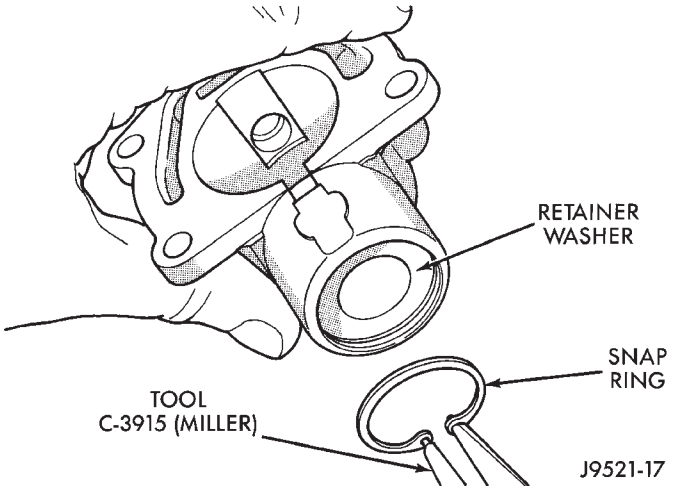

Fig. 40 Governor Weight Retaining Snap Ring And Washer Removal

(b) Push inner weight downward with nut driver. Then remove inner weight snap ring with Snap Ring Plier Tool 6823 (Fig. 42).

(c) Remove inner weight and spring from intermediate weight.

CLEANING AND INSPECTION

Thoroughly clean all the governor parts in a suitable cleaning solution but do not use any type of caustic cleaning agents.

Examine the governor components carefully. Discard any snap rings or E-clips if distorted, or worn. Be sure the governor weights operate freely in the bores and do not bind. Also verify that the governor valve slides freely on the shaft and in the bore.

The governor weight components (Fig. 43), and the governor valve (Fig. 44), must slide freely in their bores when clean and dry. Minor surface scratches and burrs can be smoothed with crocus cloth

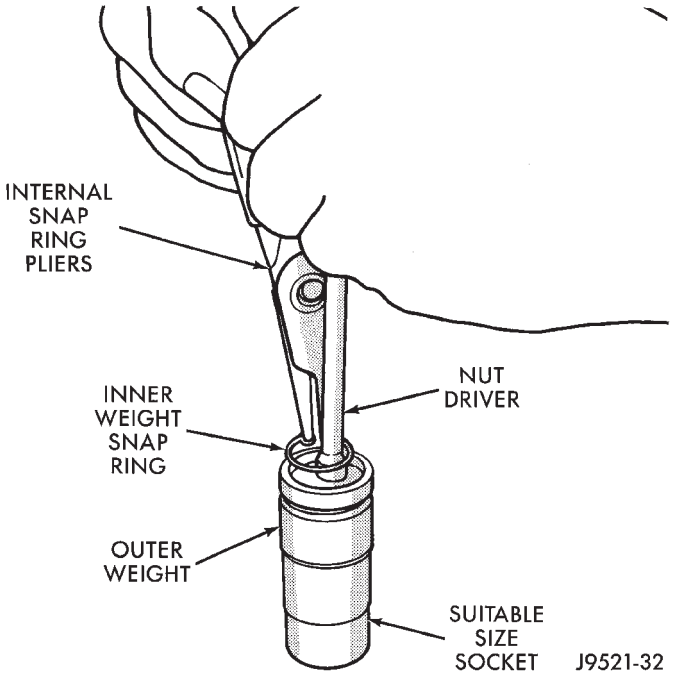

Fig. 41 Two-Stage Inner Weight Snap Ring Removal/Installation

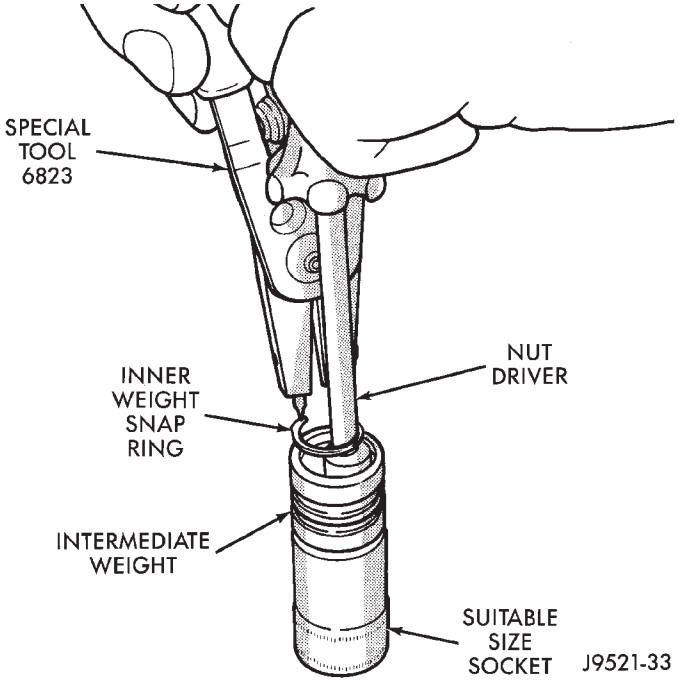

Fig. 42 Three-Stage Inner Weight Snap Ring Removal/Installation

The aluminum governor valve and outer weight have a hard coating on them. Check condition of this coating carefully. Do not reuse either part if the coating is damaged.

Inspect the governor weight spring for distortion. Replace the spring, if distorted, collapsed, or broken.

Clean the filter in solvent. Shake excess solvent from filter and allow it to air dry. Replace the filter,

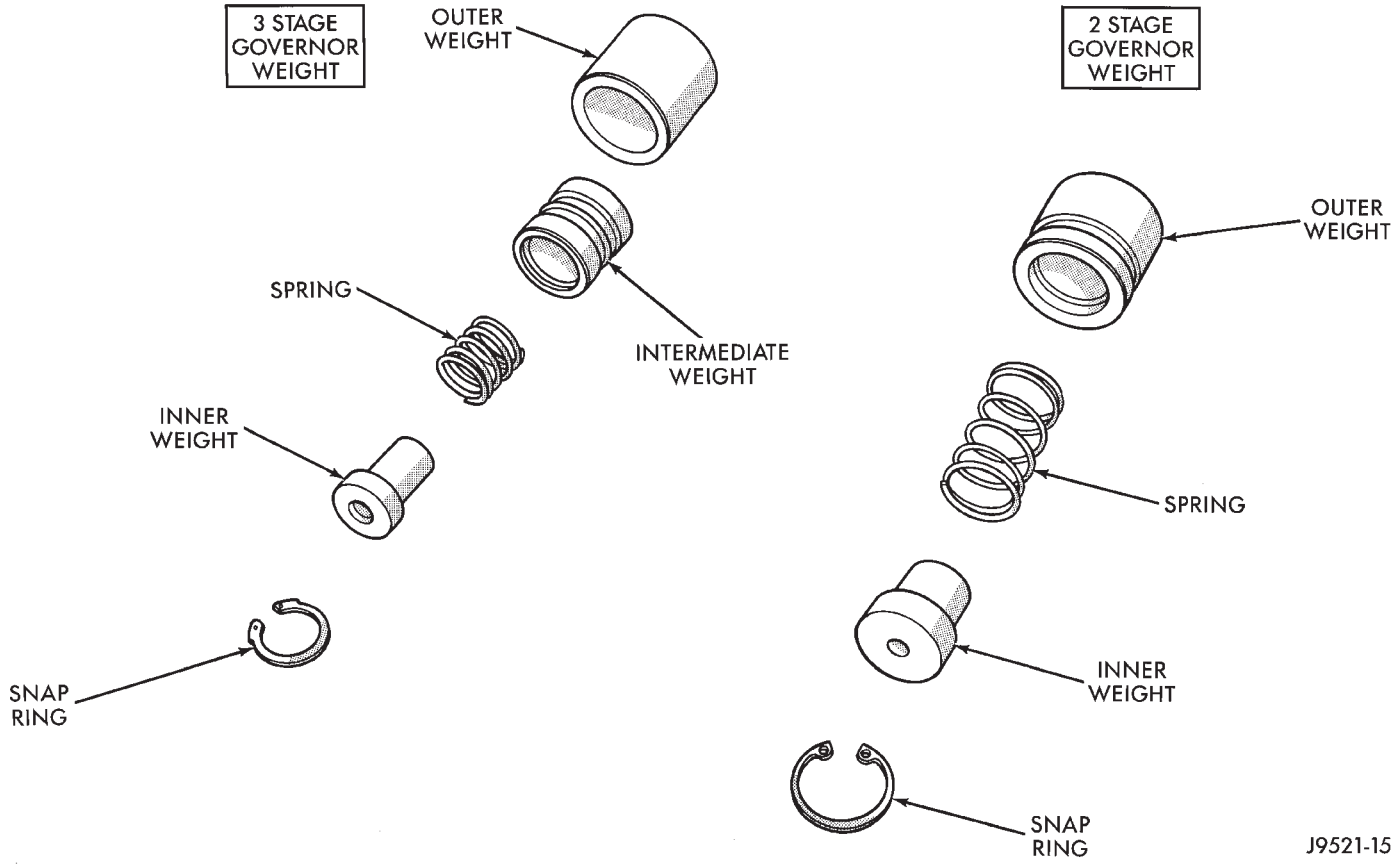

Fig. 43 Governor Weight Components (2- and 3-Stage)

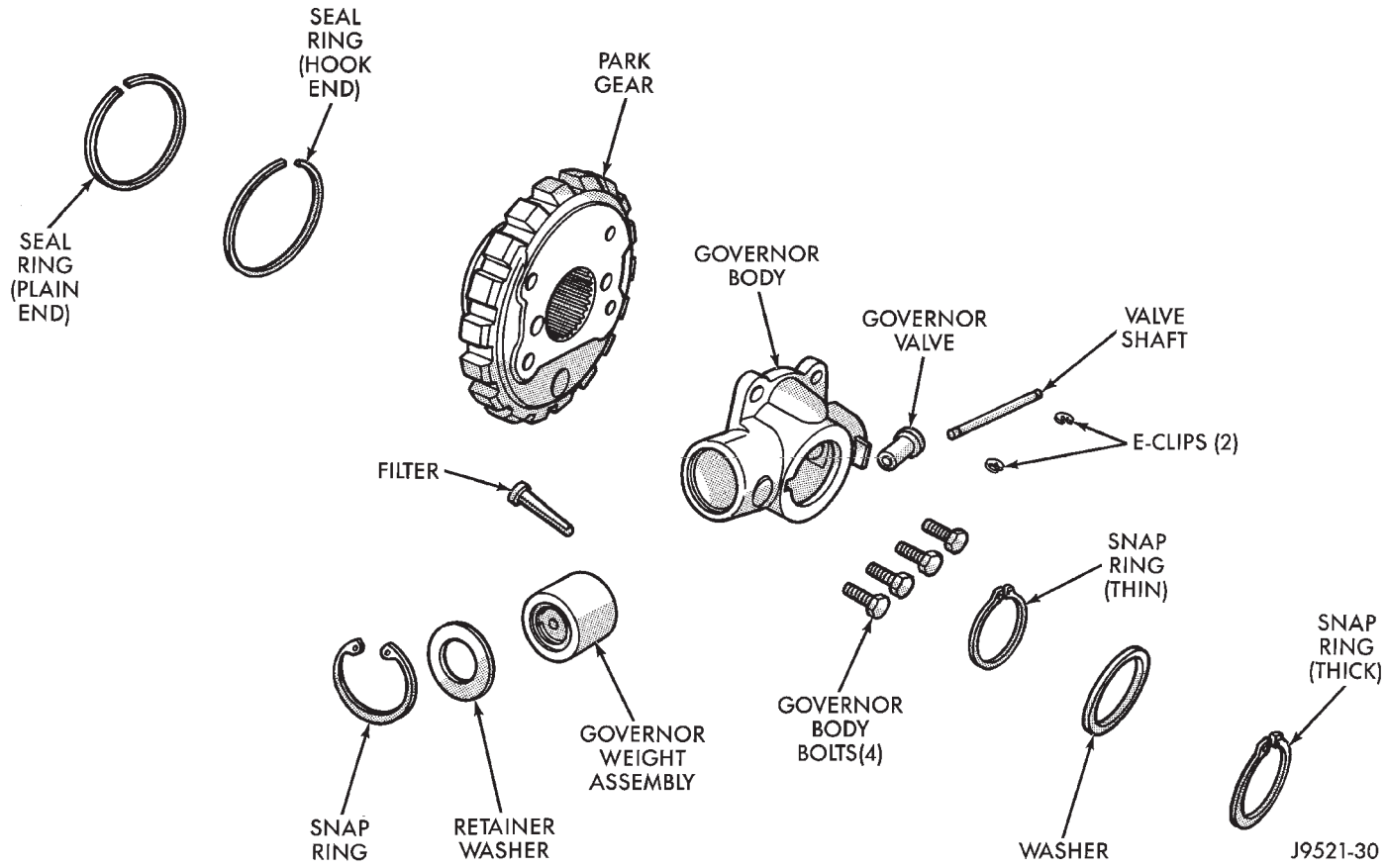

Fig. 44 Governor Components (30RH/32RH)

if damaged. Inspect the park gear for chipped or worn gear teeth or damaged ring grooves. Replace the gear, if damaged.

Check the teeth on the park gear for wear or damage. Replace the gear if necessary. Inspect the metal seal rings on the park gear hub. Replace the rings only if severely worn, or broken.

Minor scratches, or burrs on governor components can be cleaned up with oil-soaked crocus cloth. However, do not attempt to salvage components that are severely worn or scored.

The governor valve is made of aluminum and the output shaft has been spotfaced to accept the valve. The aluminum valve must not be used in prior transmissions. The valve can only be used with an output shaft that has been spotfaced for valve end clearance. In addition, the governor body and output shaft must be properly indexed during reassembly. Be sure to index these components as described in the Transmission Assembly and Adjustment procedures.

Check condition of the park gear seal rings, ring grooves and gear teeth (Fig. 45). Replace the gear as an assembly if the teeth or ring grooves are worn, or damaged.

Replace the park gear front and rear seal rings if cracked, or worn. The front ring is a plain type and the rear ring is a hook style. If replacement rings are both hook-style, be sure the ring ends are properly hooked together.

GOVERNOR/PARK GEAR ASSEMBLY

(1) Lubricate governor components with Mopar ATF Plus transmission fluid during assembly.

(2) Install new seal rings on park gear hub (Fig. 45). Install ring with interlock ends first and ring with plain ends last. Slip each ring on hub and seat them in grooves. Verify that rear ring ends are securely interlocked before proceeding.

CAUTION: Exercise care when installing the rings. They are easily broken if overspread or twisted during installation.

(3) Insert filter screen in park gear. Note that gear has one filter bore that is concentric and one that has a notch in it. Filter goes in bore that is concentric as shown (Fig. 39).

(4) Position governor body on park gear. Be sure filter is properly aligned in body recess.

(5) Install governor-to-park gear bolts snug but not to required torque at this time.

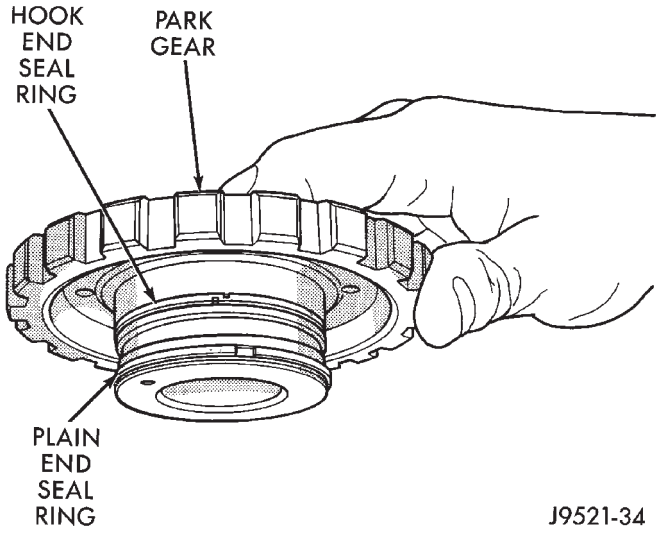

Fig. 45 Park Gear Seal Ring Position

(6) Assemble governor weight components (Fig. 43). Then install weight assembly in governor body. **Be sure inner weight snap ring is fully seated before proceeding.**

(7) Install retainer washer and snap ring that secure governor weight assembly in governor body.

(8) Set assembly aside until final assembly and installation.

OIL PUMP OVERHAUL

PUMP AND REACTION SHAFT SUPPORT DISASSEMBLY

(1) Remove seal ring from housing and reaction shaft support (Fig. 46).

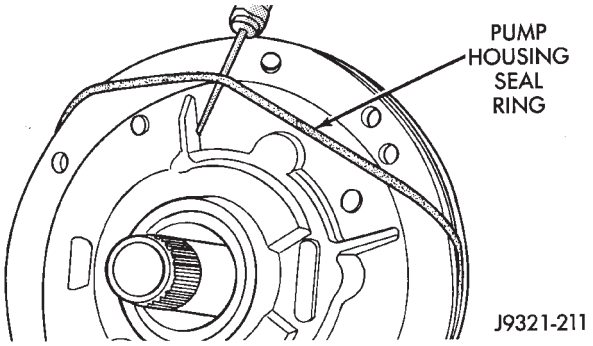

Fig. 46 Removing Pump Seal Ring

(2) Mark pump housing and support assembly for alignment reference.

(3) Loosen bolts that attach pump body to support (Fig. 47).

(4) Remove pump-to-support bolts and separate support from pump housing (Fig. 48).

(5) Remove inner and outer gears from reaction shaft support (Fig. 49).

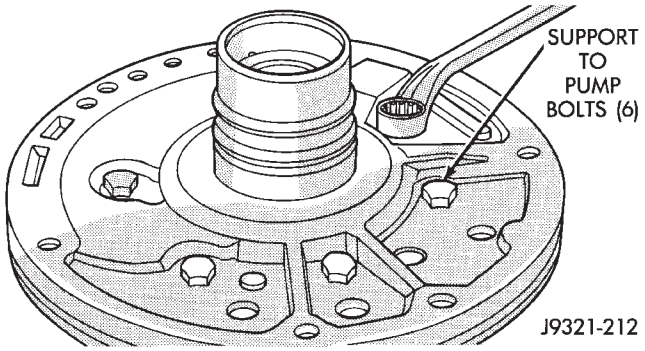

Fig. 47 Loosening Pump Support Bolts

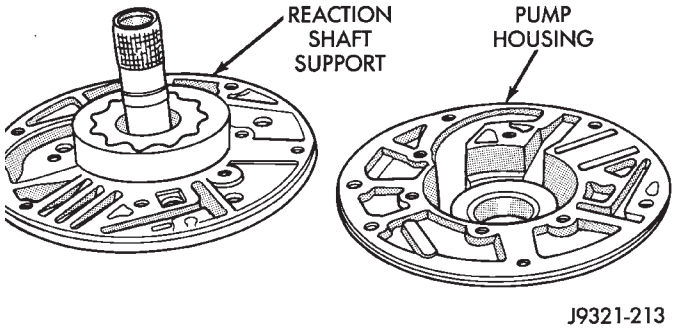

Fig. 48 Separating Pump Housing From Reaction Shaft Support

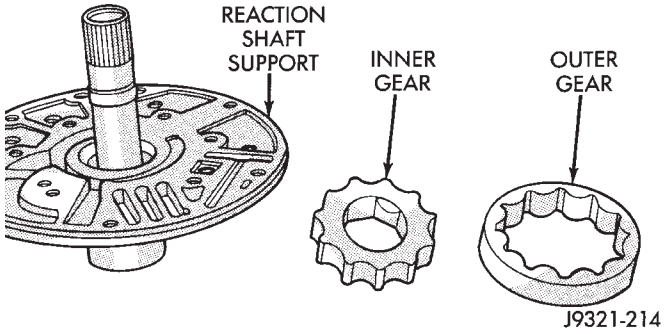

Fig. 49 Pump Gear Removal

(6) If pump seal was not removed during transmission disassembly, remove seal with punch and hammer.

(7) Remove front clutch thrust washer from support hub (Fig. 50).

OIL PUMP AND REACTION SHAFT SUPPORT CLEANING-INSPECTION

Clean pump and reaction shaft support components with solvent and dry them with compressed air.

Inspect the pump housing and support components. Replace the housing or support if the seal ring grooves or machined surfaces are worn, scored, pitted, or damaged.

Replace the pump gears if pitted, worn chipped, or damaged. Inspect the thrust washer for wear or damage. Replace the washer if necessary. **Note that the inner gear used in 1993 and later 30RH/32RH**

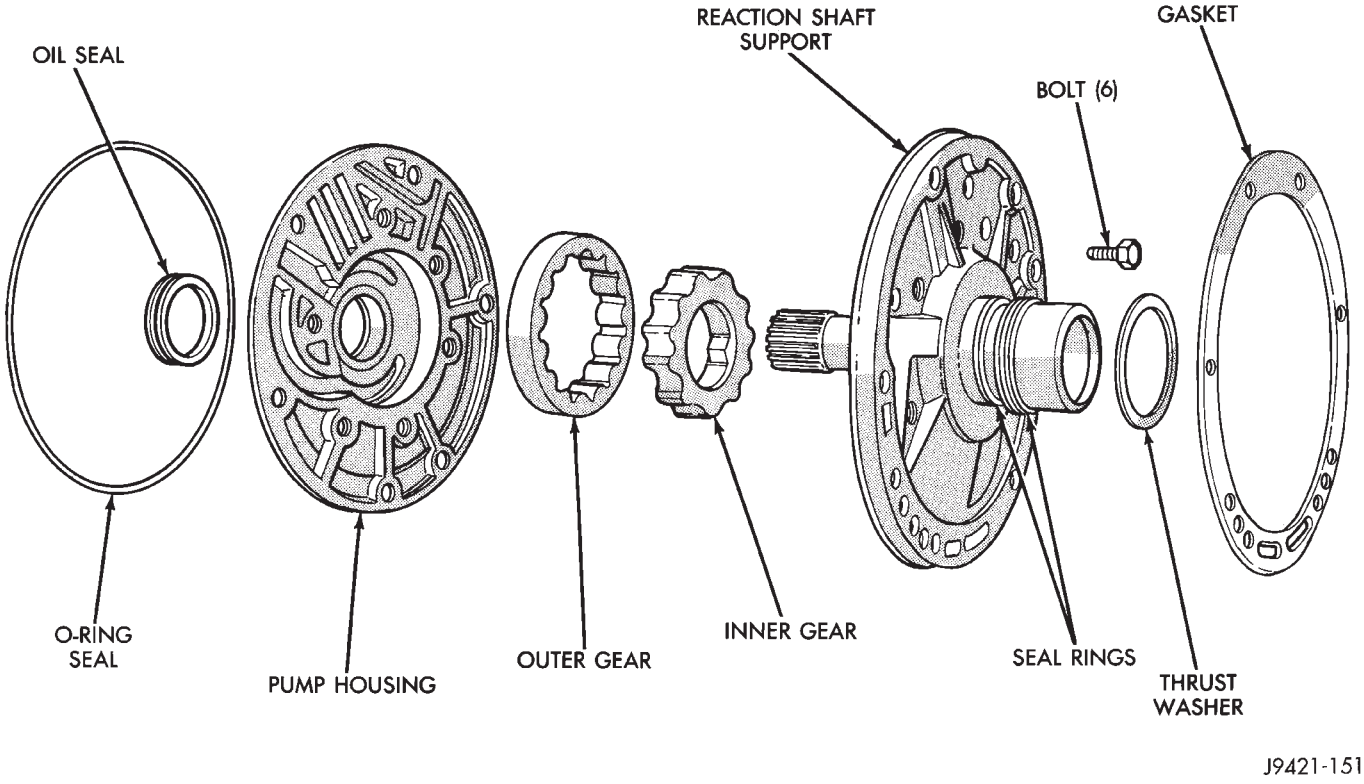

Fig. 50 Oil Pump And Reaction Shaft Support Components

oil pumps has a new design drive lug. The new design incorporates tapered drive flats instead of the square lug used previously. The torque converter hub has also been redesigned to accept the new drive flats. If pump gear replacement is necessary, be very sure to order and install the correct style gears.

Inspect the pump and reaction shaft support bushings. Minor bushing wear is acceptable. Replace the bushings only if scored, or severely worn.

Install the gears in the pump housing and measure end clearance with a feeler gauge and straightedge (Fig. 51). The pump inner gear is a one way fit. The bore on one side of the gear inside diameter is chamfered. Be sure the chamfered side faces forward (to front of pump). Clearance should be 0.010 - 0.06 mm (0.0004 - 0.0025 in.).

Measure clearance between the outer gear and the pump body (Fig. 52). Clearance should be 0.08 - 0.19 mm (0.0035 - 0.0075 in.).

Measure gear tooth clearance with a feeler gauge. Align one tooth of the outer gear in inner gear and measure clearance (Fig. 53). Clearance should be 0.08 - 0.19 mm (0.0035 - 0.0075 in.).

OIL PUMP BUSHING REPLACEMENT

(1) Remove pump bushing with Tool Handle C-4171 and Bushing Remover SP-3551 (Fig. 54).

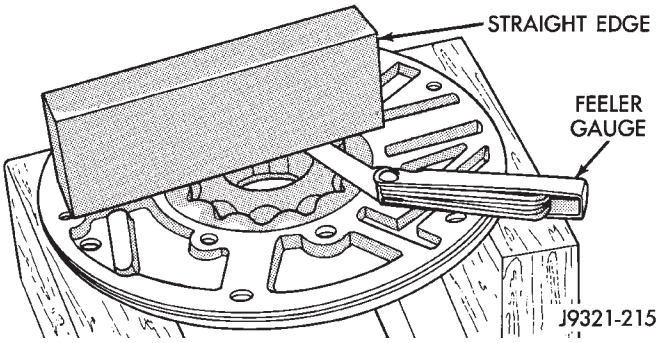

Fig. 51 Measuring Pump Gear End Clearance

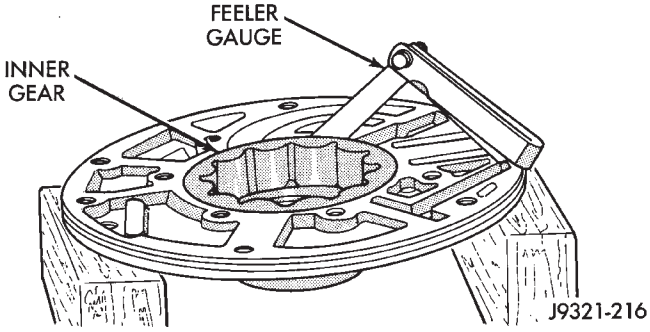

Fig. 52 Measuring Pump Housing-To-Inner Gear Clearances

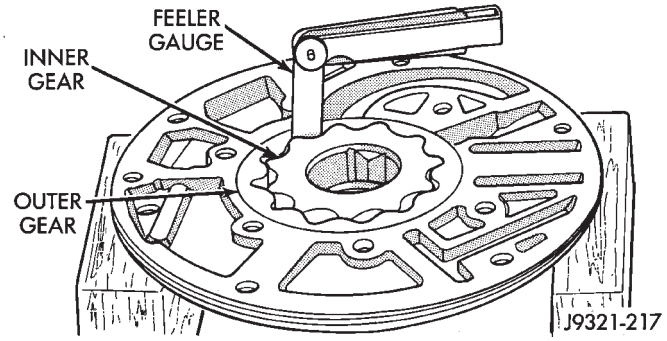

Fig. 53 Measuring Pump Gear Tooth Clearance

(2) Install new pump bushing with Tool Handle C-4171 and Bushing Installer SP-5117 (Fig. 54). Bushing should be flush with pump housing bore.

(3) Stake new pump bushing in two places with blunt punch (Fig. 55). Remove burrs from stake points with knife blade afterward.

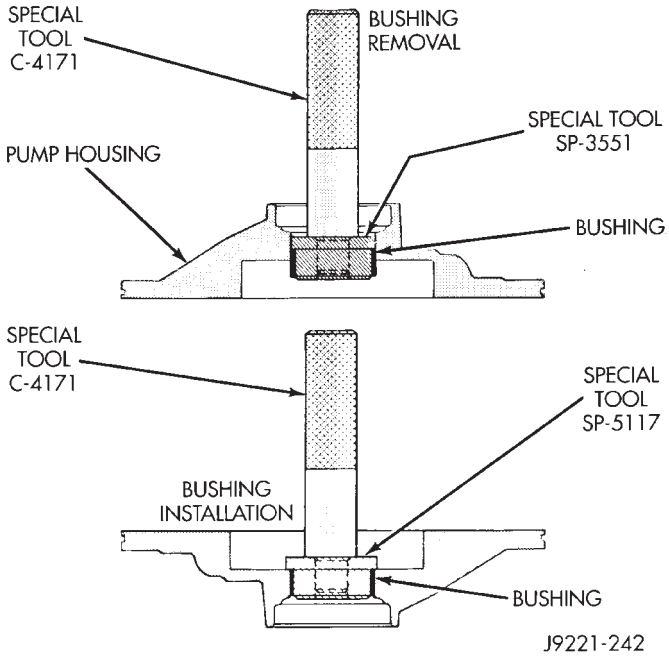

Fig. 54 Removing Oil Pump Bushing

REACTION SHAFT SUPPORT BUSHING REPLACEMENT

(1) Assemble Bushing Remover Tools SP-1191, 3633 and 5324 (Fig. 56). **Do not clamp any part of reaction shaft or support in vise.**

(2) Hold Cup Tool SP-3633 firmly against reaction shaft and thread remover SP-5324 into bushing as far as possible by hand. Then thread remover tool 3-4 additional turns into bushing with a wrench.

(3) Turn remover tool hex nut down against remover cup to pull bushing from shaft. Clean all chips from shaft after bushing removal.

(4) Lightly grip old bushing in vise or with pliers and back remover tool out of bushing.

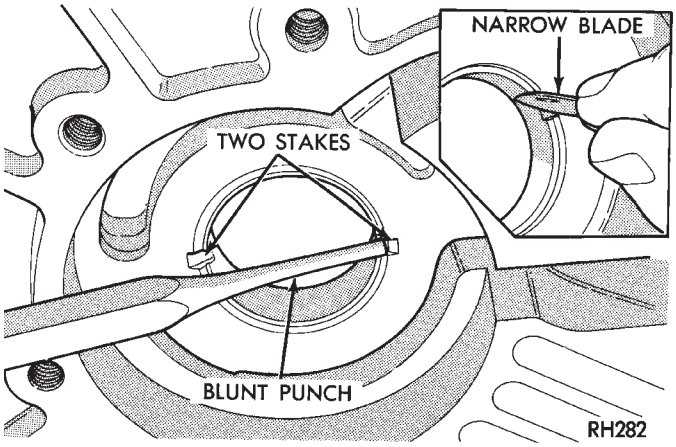

Fig. 55 Staking Oil Pump Bushing

(5) Assemble Bushing Installer Tools C-4171 and SP-5325 (Fig. 56).

(6) Slide new bushing onto Installer Tool SP-5325.

(7) Position reaction shaft support upright on a clean smooth surface.

(8) Align bushing in bore. Then tap bushing into place until Bushing Installer SP-5325 bottoms.

(9) Clean reaction shaft support thoroughly after installing bushing.

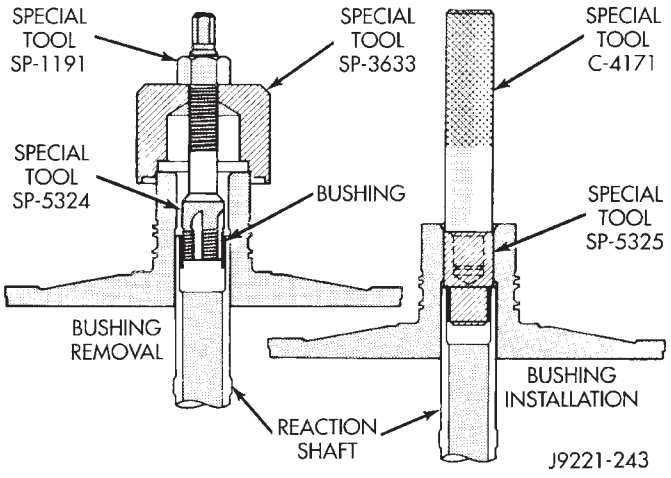

Fig. 56 Replacing Reaction Shaft Support Bushing

ASSEMBLING OIL PUMP AND REACTION SHAFT SUPPORT

(1) Lubricate gear bore in pump housing with transmission fluid.

(2) Lubricate pump gears with transmission fluid.

(3) Support pump housing on wood blocks (Fig. 57).

(4) Install outer gear in pump housing (Fig. 57). Gear can be installed either way (it is not a one-way fit).

(5) Install pump inner gear (Fig. 58).

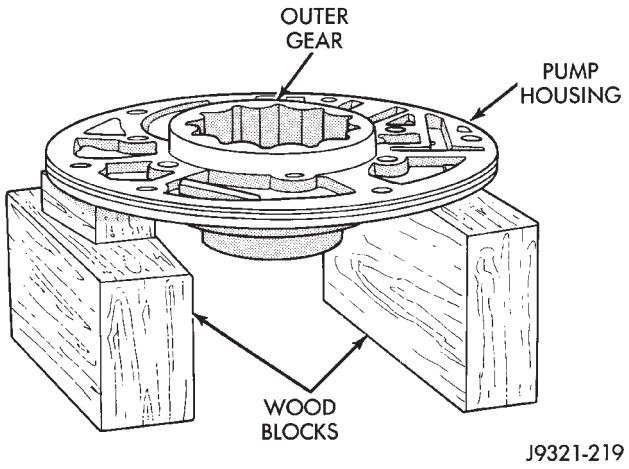

Fig. 57 Supporting Pump And Installing Outer Gear

CAUTION: The pump inner gear is a one way fit. The bore on one side of the gear inside diameter (I.D.) is chamfered. Be sure the chamfered side faces forward (to front of pump).

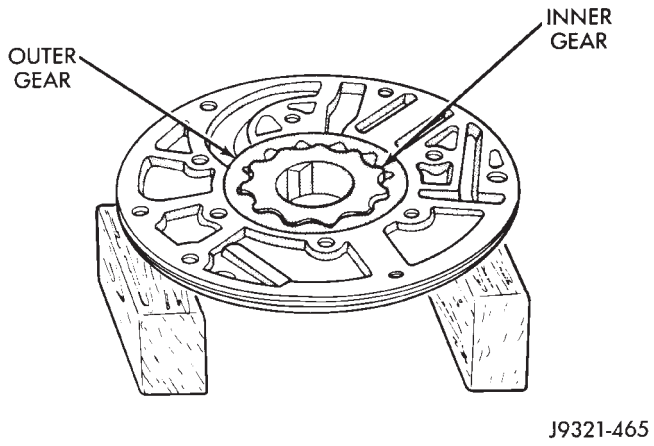

Fig. 58 Pump Inner Gear Installation

(6) Install new thrust washer on hub of reaction shaft support. Lubricate washer with transmission fluid or petroleum jelly.

(7) If reaction shaft seal rings are being replaced, install new seal rings on support hub (Fig. 59). Lubricate seal rings with transmission fluid or petroleum jelly after installation. Squeeze each ring until ring ends are securely hooked together.

CAUTION: The reaction shaft support seal rings will break if overspread, or twisted. If new rings are being installed, spread them only enough for installation. Also be very sure the ring ends are securely hooked together after installation. Otherwise, the rings will either prevent pump installation, or break during installation.

(8) Install reaction shaft support on pump housing (Fig. 60).

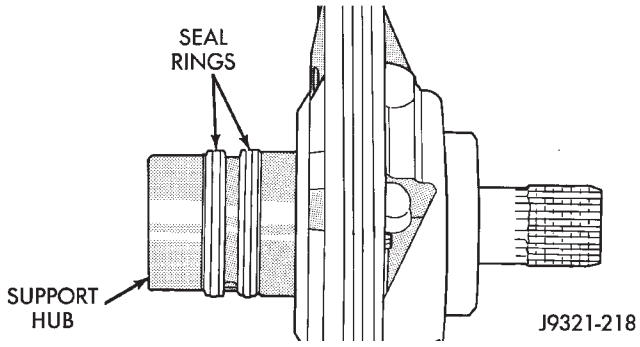

Fig. 59 Hub Seal Ring Position

(9) Align reaction support on pump housing. Use alignment marks made at disassembly. Or, rotate support until bolt holes in support and pump housing are all aligned (holes are offset for one-way fit).

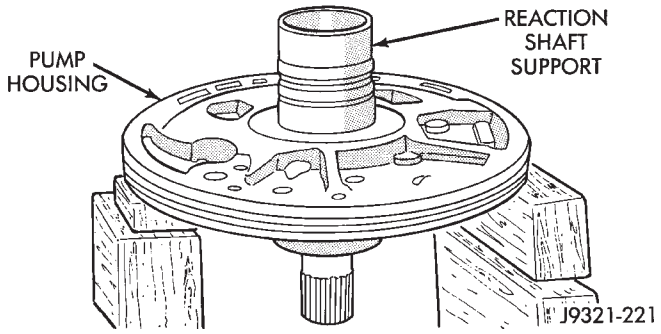

Fig. 60 Assembling Reaction Shaft Support And Pump Housing

(10) Install all bolts that attach support to pump housing. Then tighten bolts finger tight.

(11) Tighten support-to-pump bolts to required torque as follows:

(a) Reverse pump assembly and install it in transmission case. Position pump so bolts are facing out and are accessible.

(b) Secure pump assembly in case with 2 or 3 bolts, or with pilot studs.

(c) Tighten support-to-pump bolts to 20 N·m (15 ft. lbs.).

(d) Remove pump assembly from transmission case.

(12) Install new oil seal in pump with Special Tool C-4193 and Tool Handle C-4171 (Fig. 61). Be sure seal lip faces inward.

(13) Install new seal ring around pump housing. Be sure seal is properly seated in groove.

(14) Lubricate lip of pump oil seal and O-ring seal with transmission fluid.

FRONT CLUTCH OVERHAUL

FRONT CLUTCH DISASSEMBLY

(1) Remove waved snap ring and remove pressure plate, clutch plates and clutch discs (Fig. 62).

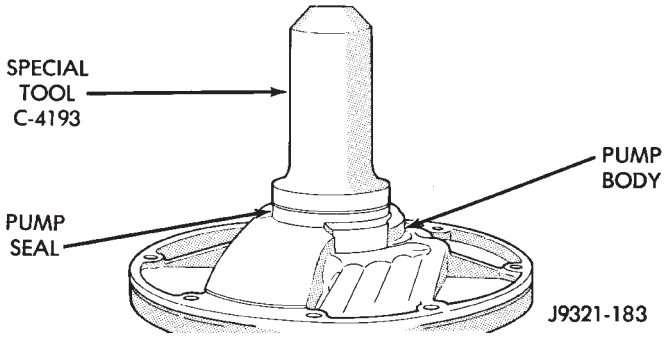

Fig. 61 Pump Oil Seal Installation

(2) Compress clutch piston spring with Compressor Tool C-3575-A (Fig. 63). Be sure legs of tool are seated squarely on spring retainer before compressing spring.

(3) Remove retainer snap ring and remove compressor tool.

(4) Remove spring retainer and clutch spring. Note position of retainer on spring for assembly reference.

(5) Remove clutch piston from clutch retainer. Remove piston by rotating it up and out of retainer.

(6) Remove seals from clutch piston and clutch retainer hub. Discard both seals as they are not reusable.

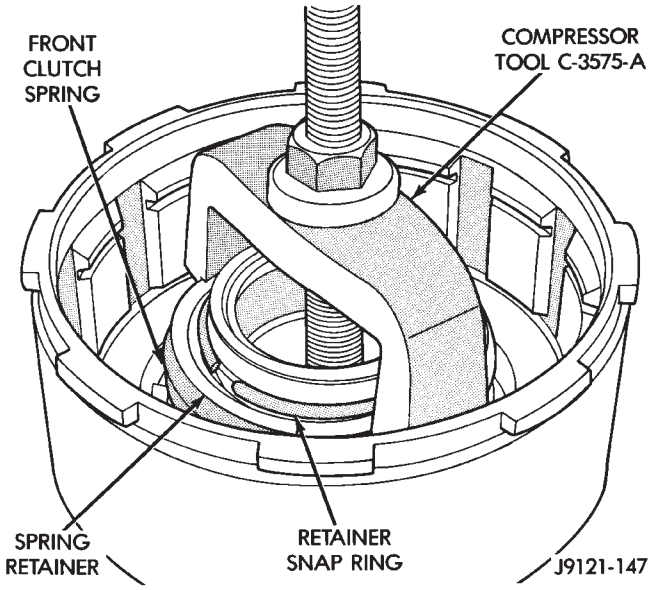

Fig. 63 Compressing Front Clutch Piston Spring

FRONT CLUTCH INSPECTION

Clean the front clutch components in solvent and dry them with compressed air only. Do not use rags or shop towels to dry any of the clutch parts. Lint from such materials will adhere to the component surfaces and could restrict or block fluid passages after assembly.

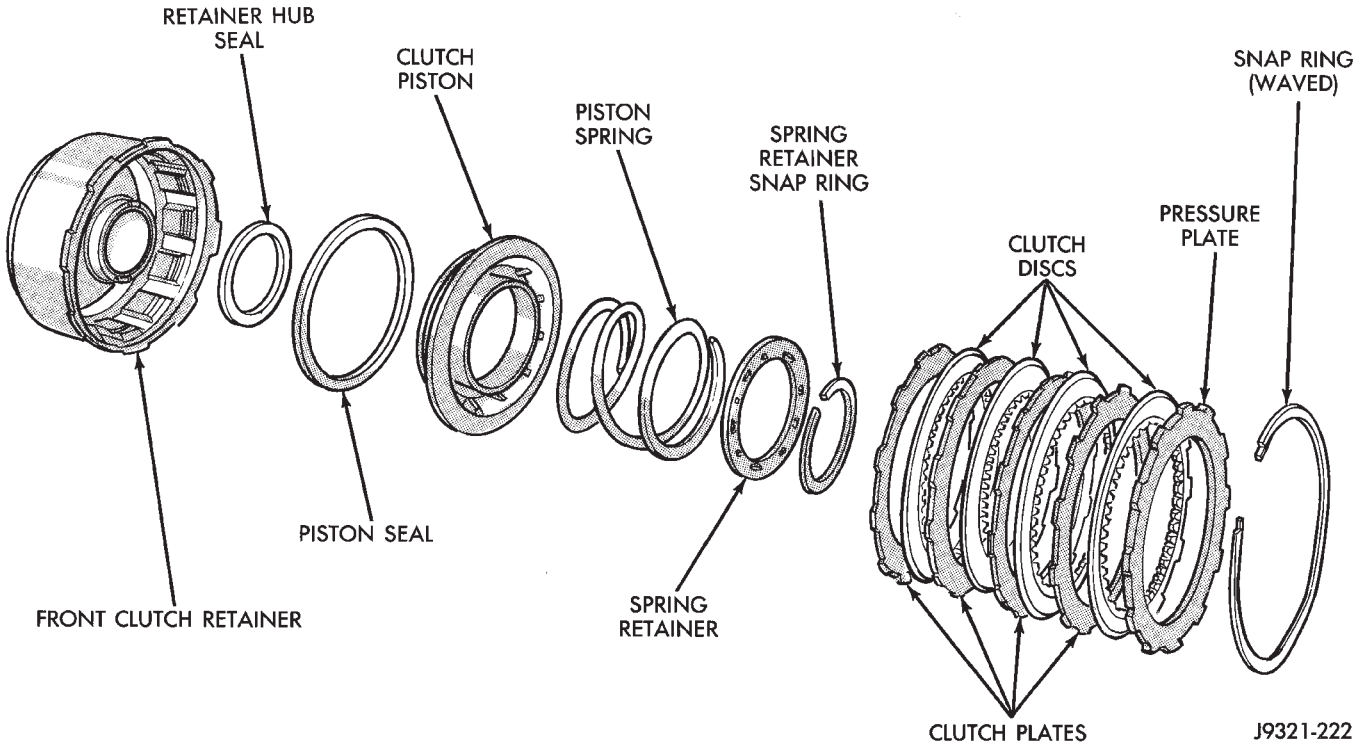

Fig. 62 Front Clutch Components (30RH/32RH)

Replace the clutch discs if warped, worn, scored, burned or charred, or if the facing is flaking off. Replace the steel plates if heavily scored, warped, or broken. Be sure the driving lugs on the plates are in good condition. The lugs must not be bent, cracked or damaged in any way.

Replace the clutch spring and spring retainer if either is distorted, warped or broken.

Check the lug grooves in the clutch retainer. The steel plates should slide freely in the slots. Replace the retainer if the grooves are worn or damaged.

Check action of the check ball in the retainer (Fig. 64). The ball must move freely and not stick.

Inspect the front clutch retainer bushings carefully (Fig. 65). The retainer bushings are not serviceable. It will be necessary to replace the retainer if either bushing is scored, or worn.

Inspect the piston and retainer seal surfaces for nicks or scratches. Minor scratches can be removed with crocus cloth. However, replace the piston and/or retainer if the seal surfaces are seriously scored.

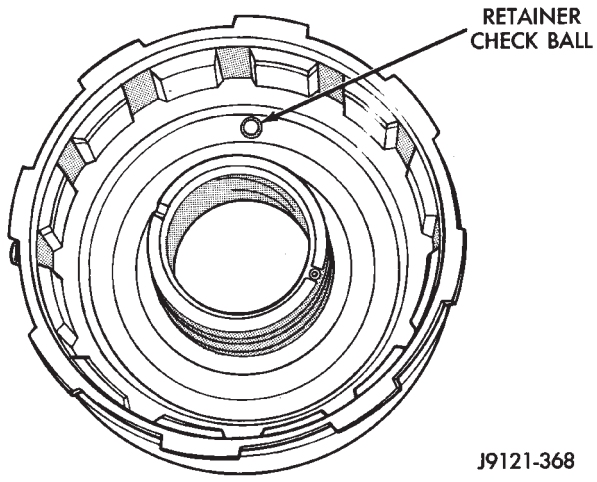

Fig. 64 Front Clutch Piston Retainer Check Ball Location

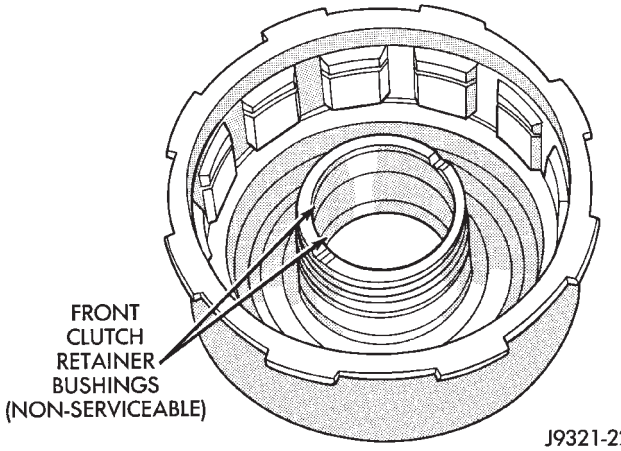

Fig. 65 Retainer Bushing Locations

FRONT CLUTCH ASSEMBLY

(1) Soak clutch discs in transmission fluid while assembling other clutch parts.

(2) Install new seals on piston and in hub of retainer. Be sure lip of each seal faces interior of clutch retainer.

(3) Lubricate lips of piston and retainer seals with liberal quantity of Mopar Door Ease, or Ru-Glyde. Then lubricate retainer hub, bore and piston with light coat of transmission fluid.

(4) Install clutch piston in retainer (Fig. 66). Use twisting motion to seat piston in bottom of retainer. A thin strip of plastic (about 0.020″ thick), can be used to guide seals into place if necessary.

CAUTION: Never push the clutch piston straight in. This will fold the seals over causing leakage and clutch slip. In addition, never use any type of metal tool to help ease the piston seals into place. Metal tools will cut, shave, or score the seals.

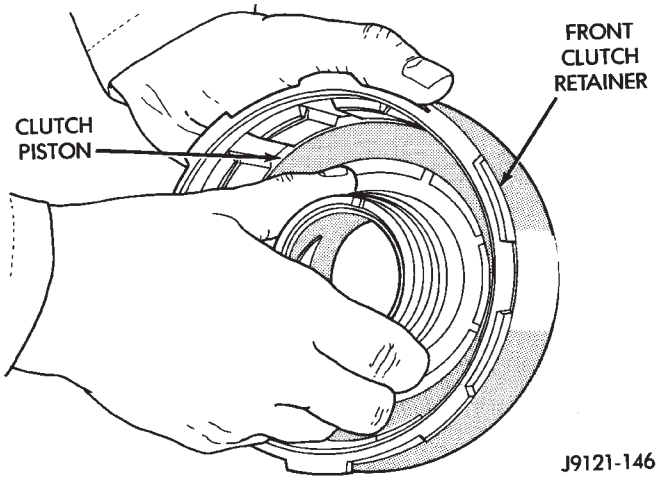

Fig. 66 Front Clutch Piston Installation

(5) Position spring in clutch piston (Fig. 67).

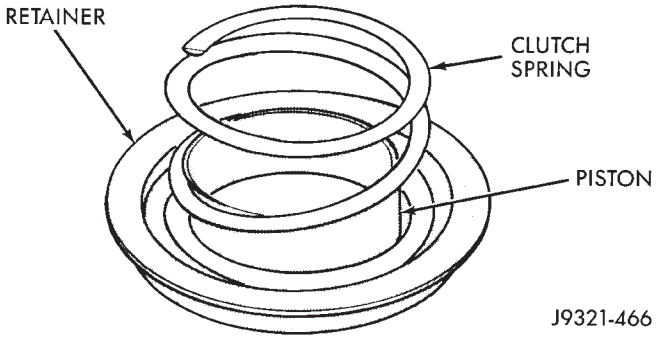

Fig. 67 Clutch Piston Spring Installation

(6) Position spring retainer on top of piston spring (Fig. 68). **Make sure retainer is properly installed. Small raised tabs should be facing upward. Semicircular lugs on underside of retainer are for positioning retainer in spring.**

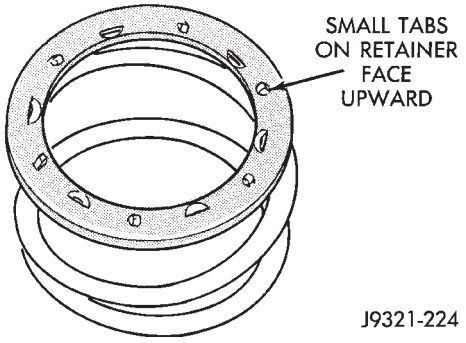

Fig. 68 Correct Spring Retainer Installed Position

(7) Compress piston spring and retainer with Compressor Tool C-3575-A (Fig. 69). Then install new snap ring to secure spring retainer and spring.

(8) Install clutch plates and discs (Fig. 62). Install steel plate then disc until all plates and discs are installed. 30RH and 32RH transmissions both require 4 clutch discs.

(9) Install pressure plate and waved snap ring (Fig. 62).

(10) Check clutch plate clearance (Fig. 69). Clearance should be 1.70 to 3.40 mm (0.067 to 0.134 in.). If clearance is incorrect, clutch discs, plates pressure plates and snap ring may have to be changed.

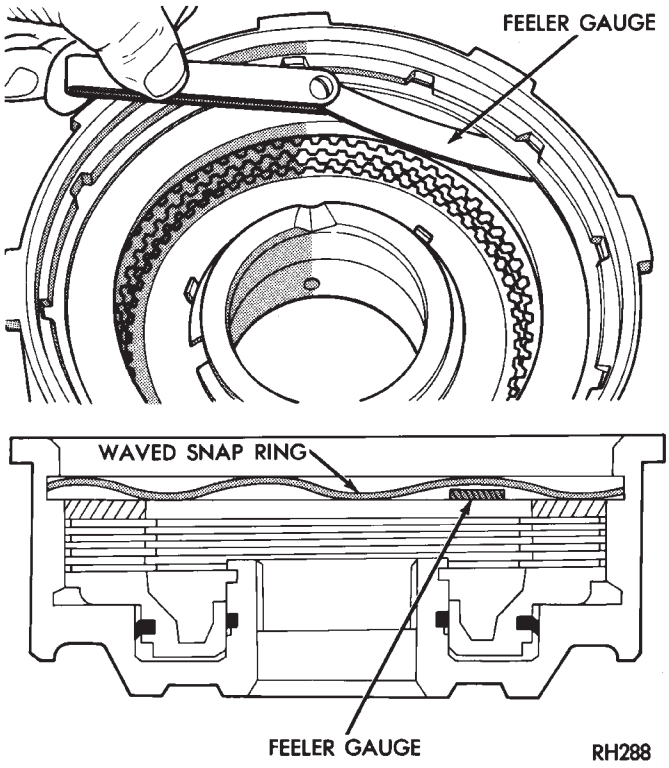

Fig. 69 Measuring Front Clutch Pack Clearance

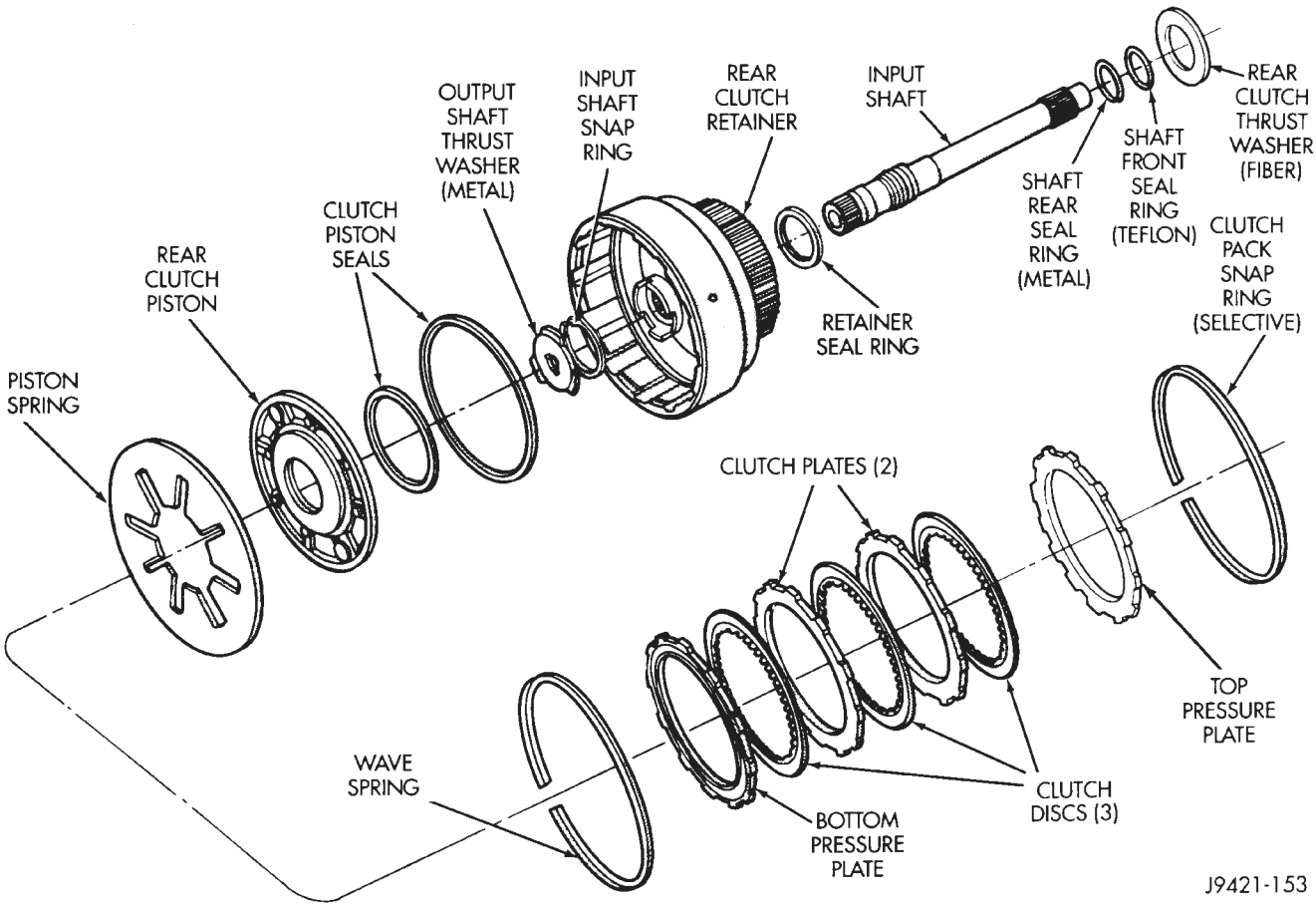

Fig. 70 Rear Clutch Components (30RH)

REAR CLUTCH OVERHAUL

REAR CLUTCH DISASSEMBLY

(1) Remove fiber thrust washer from forward side of clutch retainer.

(2) Remove selective clutch pack snap ring (Figs. 70 and 71).

(3) Remove top pressure plate, clutch discs, steel plates, bottom pressure plate and wave spring (Figs. 70 and 71).

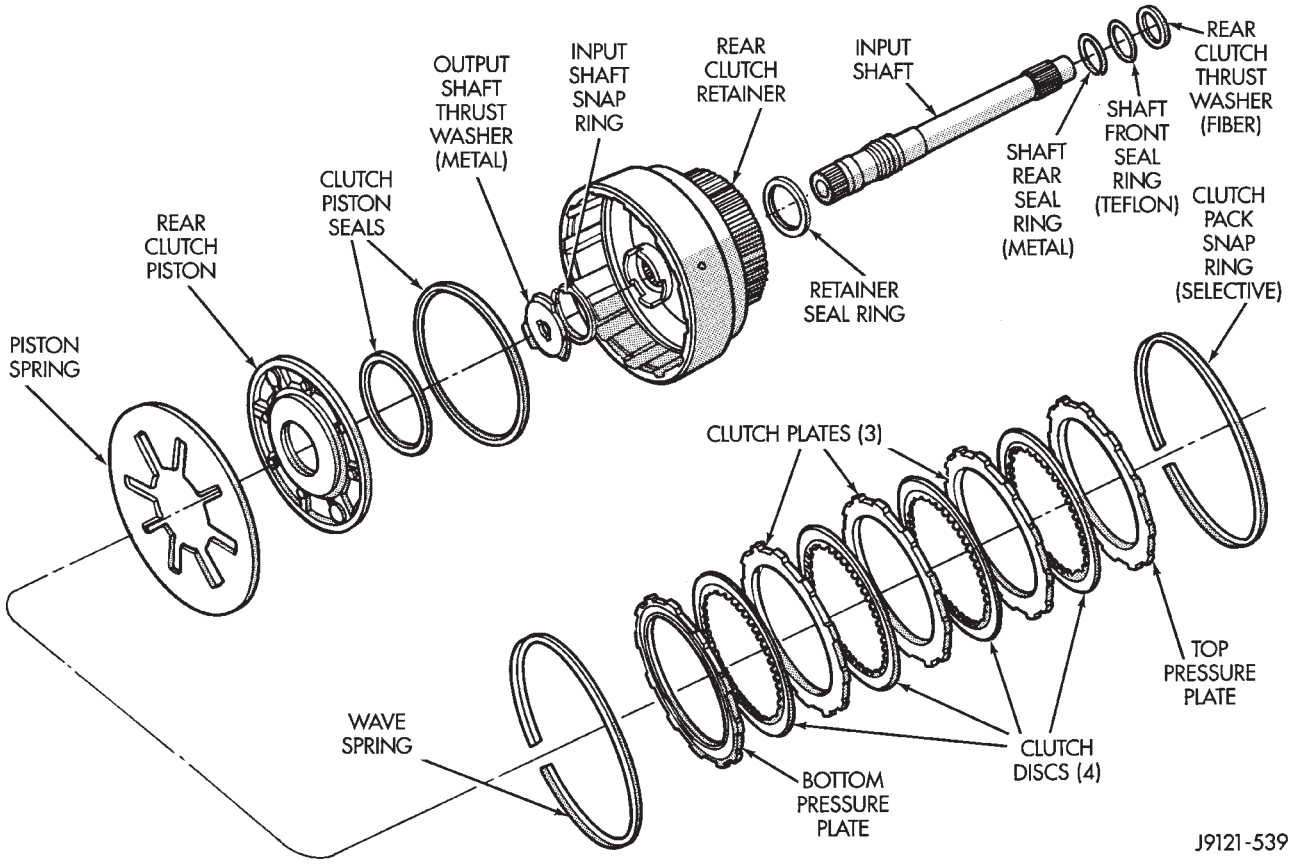

Fig. 71 Rear Clutch Components (32RH)

(4) Remove clutch piston with rotating motion.

(5) Remove and discard piston seals.

(6) Remove input shaft snap ring (Fig. 72).

(7) Press input shaft out of retainer with shop press and suitable size press tool (Fig. 73).

(8) Remove input shaft front/rear seal rings.

REAR CLUTCH INSPECTION

Clean the clutch components with solvent and dry them with compressed air. Do not use rags or shop towels to dry any of the clutch parts. Lint from such materials will adhere to component surfaces and could restrict or block fluid passages after assembly.

Replace the clutch discs if warped, worn, scored, burned/charred, the lugs are damaged, or if the facing is flaking off. Replace the top and bottom pressure plates if scored, warped, or cracked. Be sure the driving lugs on the pressure and clutch plates are also in good condition. The lugs must not be bent, cracked or damaged in any way.

Replace the piston spring and wave spring if either part is distorted, warped or broken.

Check the lug grooves in the clutch retainer. The clutch and pressure plates should slide freely in the slots. Replace the retainer if the grooves are worn or damaged. Also check action of the check balls in the retainer and piston. Each check ball must move freely and not stick.

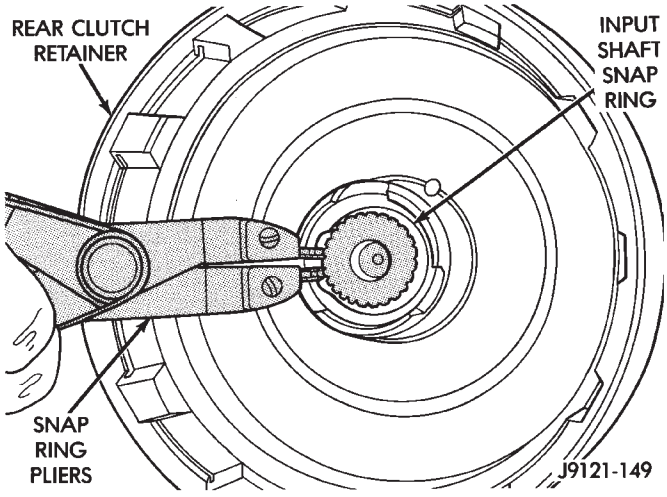

Fig. 72 Removing/Installing Input Shaft Snap Ring

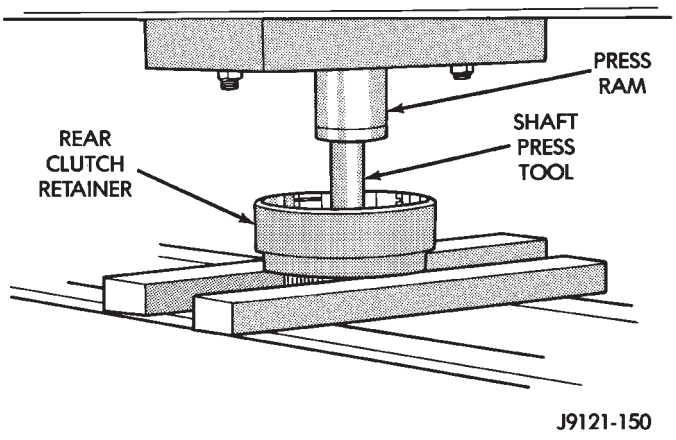

Fig. 73 Pressing Input Shaft Out Of Rear Clutch Retainer

Replace the retainer bushing if worn, scored, or doubt exists about bushing condition.

Inspect the piston and retainer seal surfaces for nicks or scratches. Minor scratches can be removed with crocus cloth. However, replace the piston and/or retainer if the seal surfaces are seriously scored.

Check condition of the fiber thrust washer and metal output shaft thrust washer. Replace either washer if worn or damaged.

Check condition of the seal rings on the input shaft and clutch retainer hub. Replace the seal rings only if worn, distorted, or damaged. The input shaft front seal ring is teflon with chamfered ends. The rear ring is metal with interlocking ends.

Check the input shaft for wear, or damage. Replace the shaft if worn, scored or damaged in any way.

ASSEMBLING REAR CLUTCH

(1) Soak clutch discs in transmission fluid while assembling other clutch parts.

(2) Install new seal rings on clutch retainer hub and input shaft if necessary (Fig. 74).

(a) Be sure clutch hub seal ring is fully seated in groove and is not twisted.

(b) Note that input shaft front seal ring is teflon and rear seal ring is metal (Fig. 75). Be sure chamfered ends of teflon ring are properly joined and that ends of rear ring are securely hooked together. Lubricate both rings with transmission fluid after installation.

(3) Lubricate splined end of input shaft and clutch retainer with transmission fluid. Then press input shaft into retainer (Fig. 76).

(4) Install input shaft snap ring (Figs. 70-71).

(5) Install new seals on clutch piston. Be sure lip of each seal faces interior of clutch retainer.

(6) Lubricate lip of piston seals with generous quantity of Mopar Door Ease, or Ru-Glyde. Then lubricate retainer hub and bore with light coat of transmission fluid.

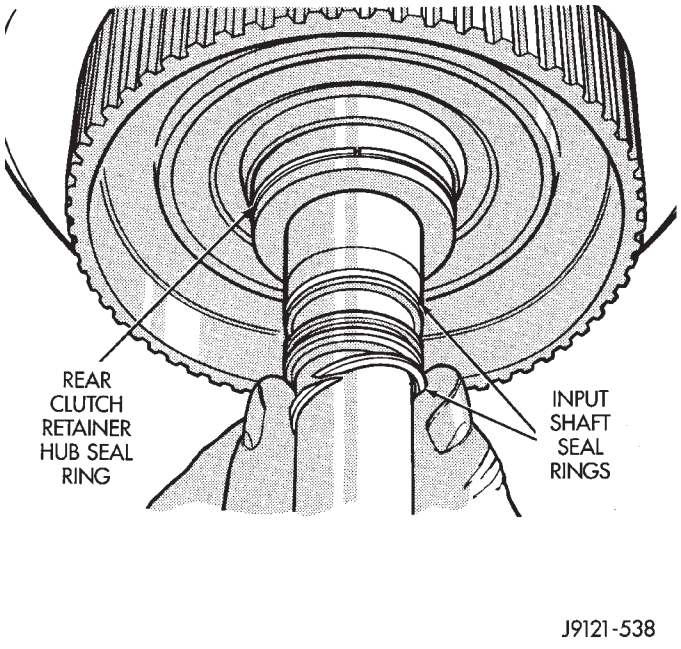

Fig. 74 Rear Clutch Retainer And Input Shaft Seal Ring Installation

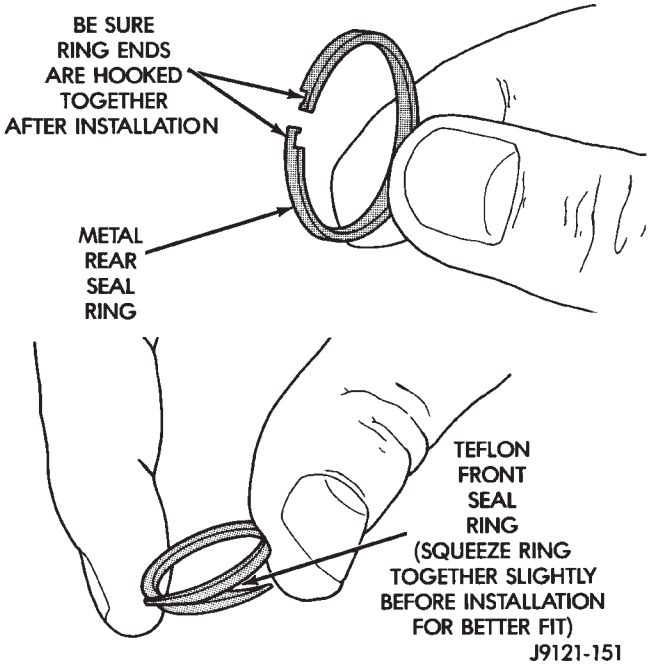

Fig. 75 Input Shaft Seal Ring Identification

(7) Install clutch piston in retainer. Use twisting motion to seat piston in bottom of retainer. A thin strip of plastic (about 0.020″ thick), can be used to guide seals into place if necessary.

CAUTION: Never push the clutch piston straight in. This will fold the seals over causing leakage and clutch slip. In addition, never use any type of metal tool to help ease the piston seals into place. Metal tools will cut, shave, or score the seals.

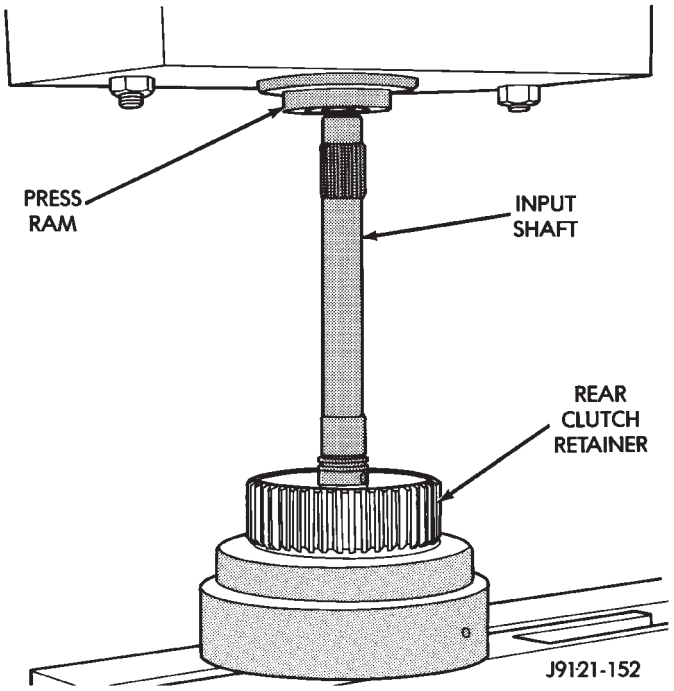

Fig. 76 Pressing Input Shaft Into Rear Clutch Retainer

(8) Install piston spring in retainer and on top of piston (Fig. 77). Concave side of spring faces downward (toward piston).

(9) Install wave spring in retainer (Fig. 77). Be sure spring is completely seated in retainer groove.

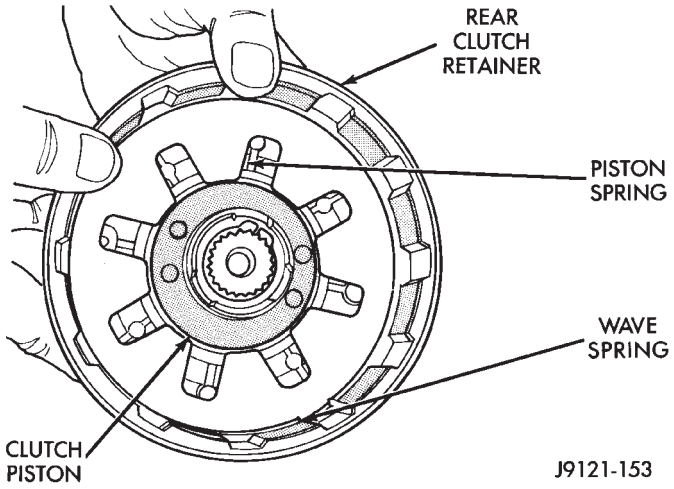

Fig. 77 Piston And Wave Spring Position

(10) Install bottom pressure plate (Fig. 70). Ridged side of plate faces downward (toward piston) and flat side toward clutch pack.

(11) Install first clutch disc in retainer on top of bottom pressure plate. Then install a clutch plate followed by a clutch disc until entire clutch pack is installed.

- 3 discs and 2 plates are used in 30RH (Fig. 70)
- 4 discs and 3 plates are used in 32RH (Fig. 71).

(12) Install top pressure plate (Figs. 70-71).

(13) Install selective snap ring (Figs. 70-71). Be sure snap ring is fully seated in retainer groove.

(14) Measure clutch pack clearance (Fig. 78). Clearance should be 0.64 - 1.14 mm (0.025 - 0.045 in.). If clearance is incorrect, steel plates, discs, snap ring and pressure plates may have to be changed.

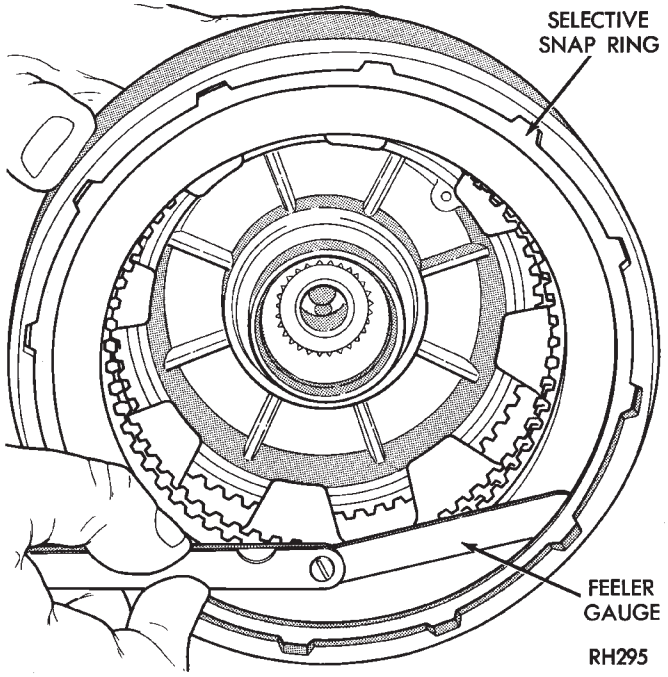

Fig. 78 Typical Method Of Checking Rear Clutch Pack Clearance

(15) Coat rear clutch fiber thrust washer with petroleum jelly and install washer over input shaft and into clutch retainer (Fig. 79). Use enough petroleum jelly to hold washer in place.

(16) Set rear clutch aside for installation during final assembly.

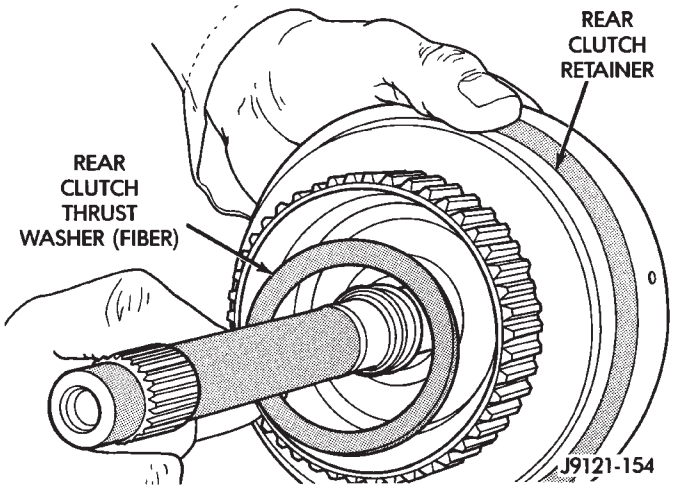

Fig. 79 Installing Rear Clutch Thrust Washer

PLANETARY GEAR TRAIN OVERHAUL

PLANETARY GEARTRAIN DISASSEMBLY

(1) Remove planetary snap ring (Fig. 80).

(2) Remove front annulus and planetary assembly from driving shell (Fig. 80).

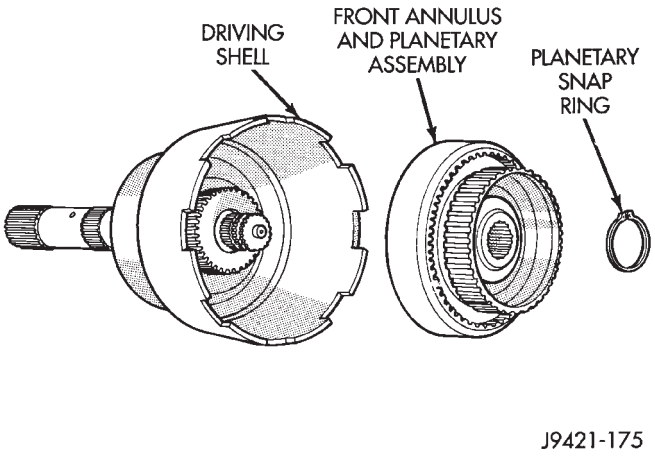

Fig. 80 Front Annulus And Planetary Assembly Removal

(3) Remove snap ring that retains front planetary gear in annulus gear (Fig. 81).

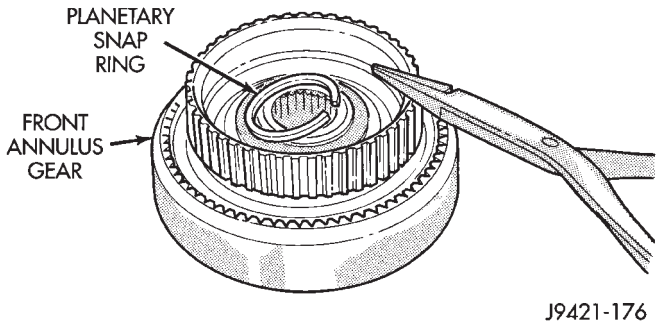

Fig. 81 Front Planetary Snap Ring Removal

(4) Remove tabbed thrust washer and tabbed thrust plate from hub of front annulus (Fig. 82).

(5) Separate front annulus and planetary gears (Fig. 82).

(6) Remove front planetary gear front thrust washer from annulus gear hub (Fig. 82).

(7) Remove front planetary rear thrust washer from driving shell.

(8) Separate and remove driving shell, rear planetary and rear annulus from output shaft (Fig. 83).

(9) Remove tabbed thrust washers from rear planetary gear.

(10) Remove snap ring that retains sun gear in driving shell. Then remove sun gear, spacer and thrust plates.

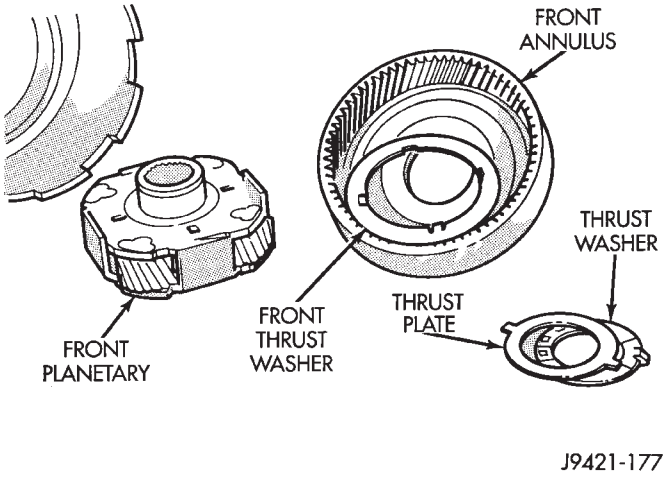

Fig. 82 Front Planetary And Annulus Gear Disassembly

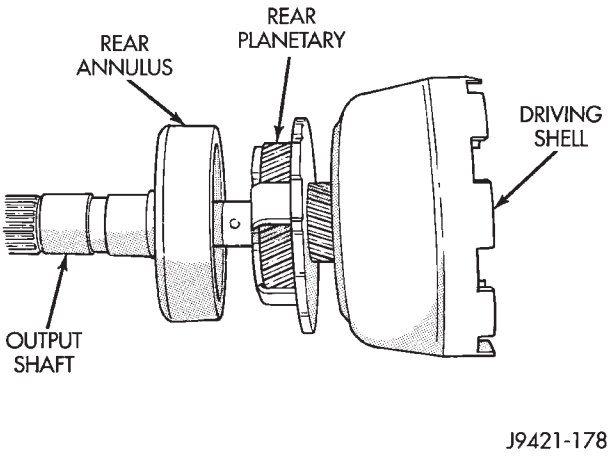

Fig. 83 Removing Driving Shell, Rear Planetary And Rear Annulus

PLANETARY GEARTRAIN INSPECTION

Clean the planetary components in solvent and dry them with compressed air.

Check sun gear and driving shell condition (Fig. 84). Replace the gear if damaged or if the bushings are scored or worn. The bushings are not serviceable. Replace the driving shell if worn, cracked or damaged.

Replace planetary gear sets if gears, pinion pins, or carrier are damaged in any way. Replace the annulus gears and supports if either component is worn or damaged.

Inspect the geartrain spacers, thrust plates, snap rings, and thrust washers (Fig. 84). Replace any of these parts that are worn, distorted or damaged. Do not attempt to reuse these parts.

The planetary gear thrust washers are different sizes. The large diameter washers go on the front planetary and the smaller washers go on the rear

planetary. All the washers have four locating tabs on them. These tabs fit in the holes or slots provided in each planetary gear.

Inspect the output shaft carefully. Pay particular attention to the machined bushing/bearing surfaces on the shaft and the governor valve shaft bore at the shaft rear.

Replace the output shaft if the machined surfaces are scored, pitted, or damaged in any way. Also replace the shaft if the splines are damaged, or exhibit cracks at any location (especially at the governor valve shaft bore).

The annulus gears can be removed from their supports if necessary. Just remove the snap rings and separate the two parts when replacement is necessary. In addition, the annulus gear bushings can be replaced if severely worn, or scored. However it is not necessary to replace the bushings if they only exhibit normal wear. Check bushing fit on the output shaft to be sure.

ASSEMBLING PLANETARY GEARTRAIN

(1) Lubricate output shaft and planetary components with transmission fluid. Use petroleum jelly to lubricate and hold thrust washers and plates in position.

(2) Assemble rear annulus gear and support if disassembled. Be sure support snap ring is seated and that shoulder-side of support faces rearward (Fig. 85).

(3) Install rear thrust washer on rear planetary gear (Fig. 84). Use enough petroleum jelly to hold washer in place. Also be sure all four washer tabs are properly engaged in gear slots.

(4) Install rear annulus over and onto rear planetary gear (Fig. 85).

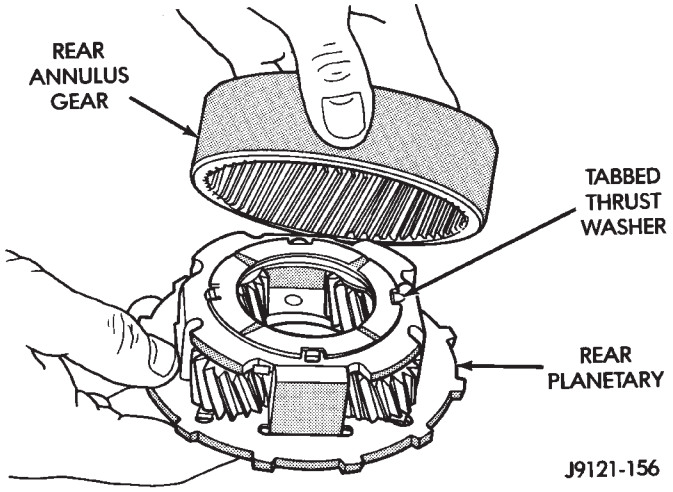

Fig. 85 Assembling Rear Annulus And Planetary Gear

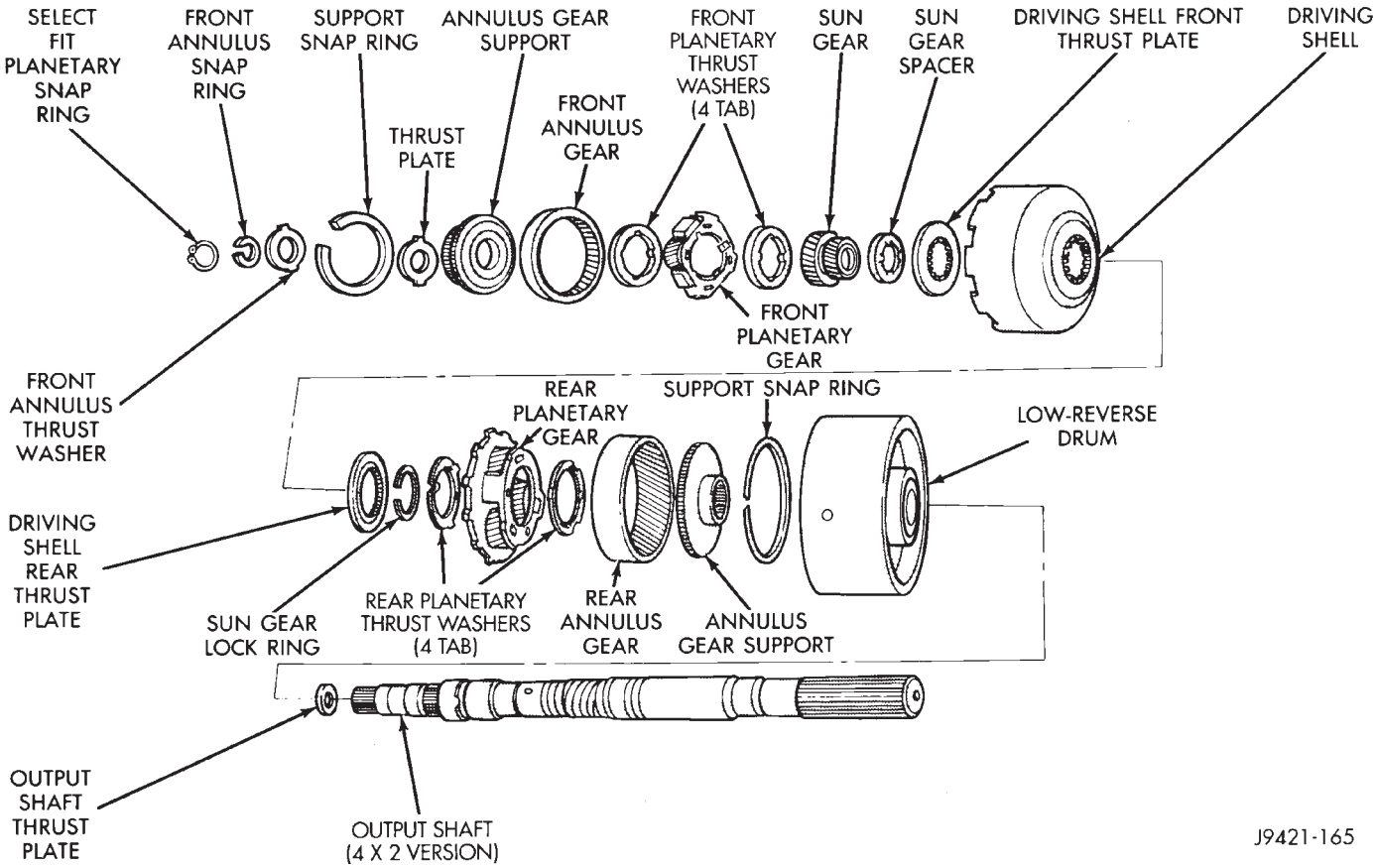

Fig. 84 Planetary Geartrain Components (30RH/32RH)

(5) Install assembled rear planetary and annulus gear on output shaft (Fig. 86). Verify that assembly is fully seated on shaft.

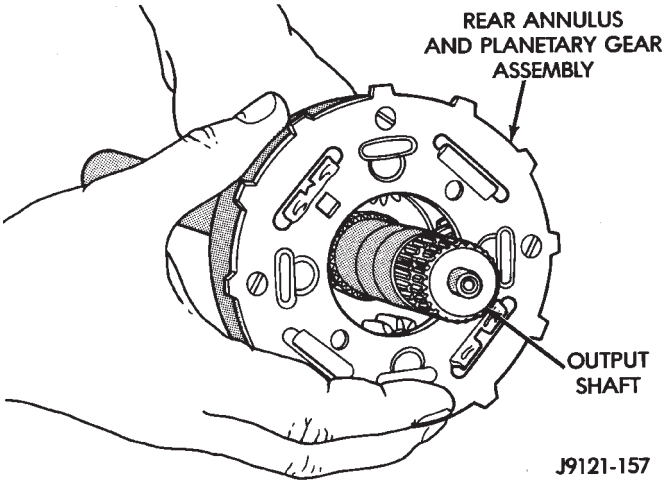

Fig. 86 Installing Rear Annulus And Planetary On Output Shaft

(6) Install front thrust washer on rear planetary gear (Fig. 87). Use enough petroleum jelly to hold washer on gear. Be sure all four washer tabs are seated in slots.

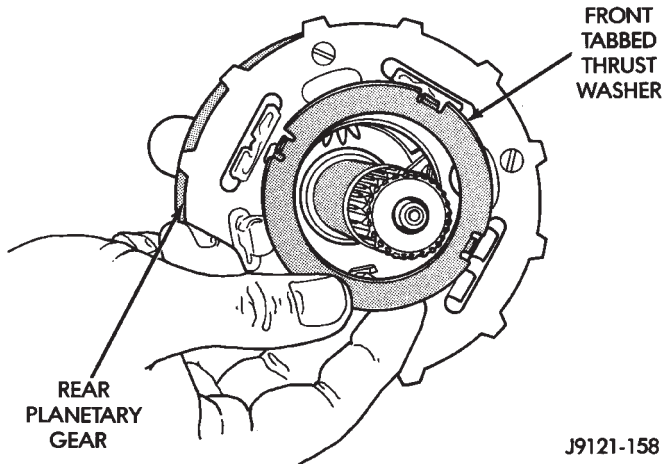

Fig. 87 Installing Rear Planetary Front Thrust Washer

(7) Install spacer on sun gear (Fig. 88).

(8) Install thrust plate on sun gear (Fig. 89). Note that driving shell thrust plates are interchangeable. Use either plate on sun gear and at front/rear of shell.

(9) Hold sun gear in place and install thrust plate over sun gear at rear of driving shell (Fig. 90).

(10) Position wood block on bench and support sun gear on block (Fig. 91). This makes it easier to align and install sun gear lock ring. Keep wood block handy as it will also be used for geartrain end play check.

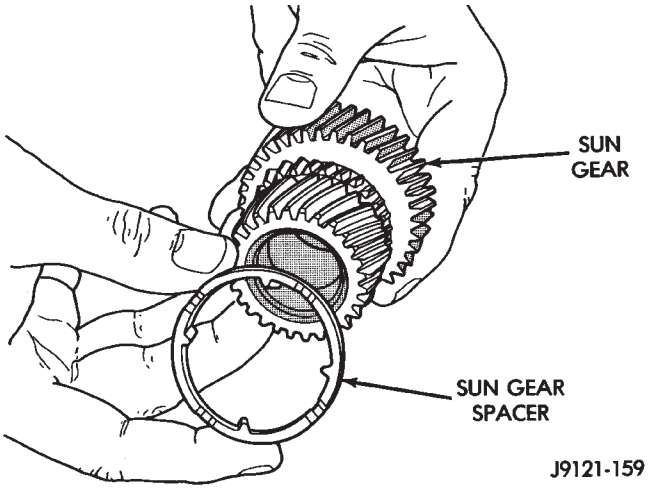

Fig. 88 Installing Spacer On Sun Gear

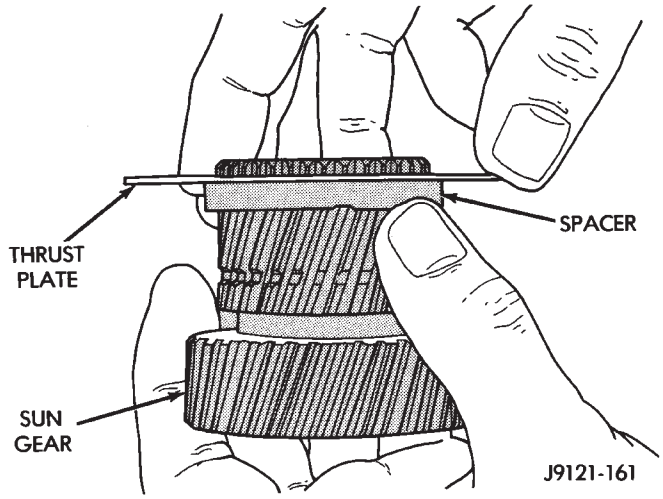

Fig. 89 Installing Driving Shell Front Thrust Plate On Sun Gear

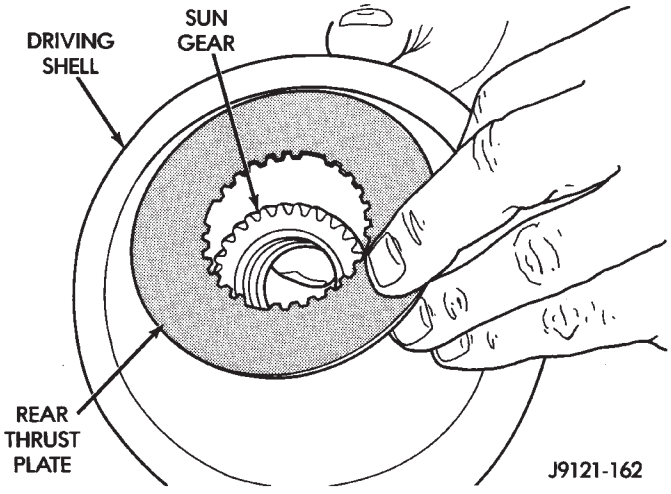

Fig. 90 Installing Driving Shell Rear Thrust Plate

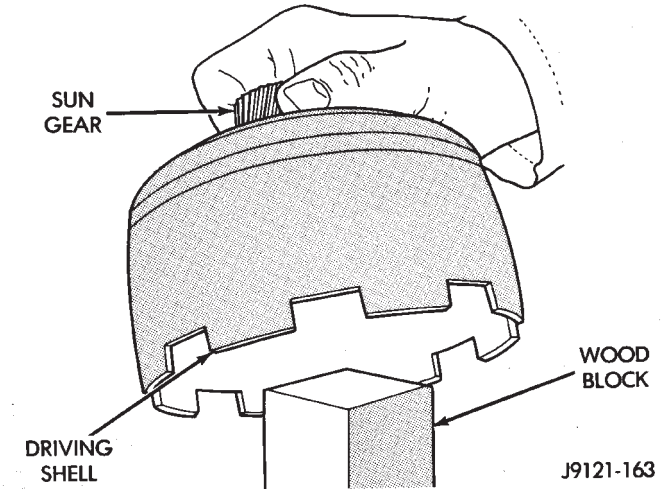

Fig. 91 Supporting Sun Gear On Wood Block

(11) Align rear thrust plate on driving shell and install sun gear lock ring. Be sure ring is fully seated in sun gear ring groove (Fig. 92).

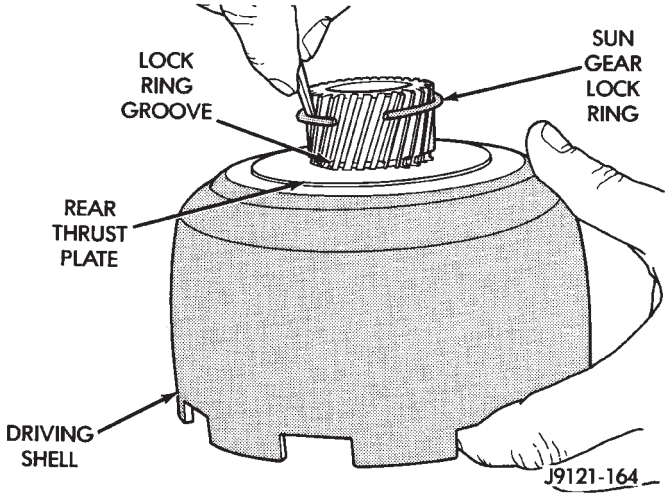

Fig. 92 Installing Sun Gear Lock Ring

(12) Install assembled driving shell and sun gear on output shaft (Fig. 93).

(13) Install rear thrust washer on front planetary gear (Fig. 94). Use enough petroleum jelly to hold washer in place and be sure all four washer tabs are seated.

(14) Install front planetary gear on output shaft and in driving shell (Fig. 95).

(15) Install front thrust washer on front planetary gear. Use enough petroleum jelly to hold washer in place and be sure all four washer tabs are seated.

(16) Assemble front annulus gear and support, if necessary. Be sure support snap ring is seated.

(17) Install front annulus on front planetary (Fig. 95).

(18) Position thrust plate on front annulus gear support (Fig. 96). **Note that plate has two tabs on it. These tabs fit in notches of annulus hub.**

(19) Install thrust washer in front annulus (Fig.

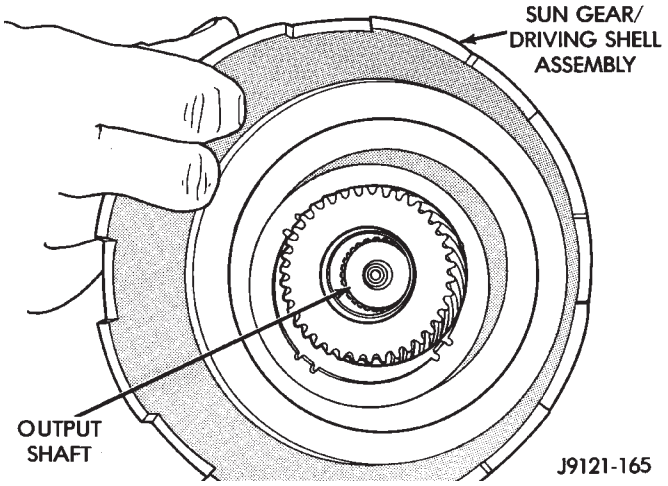

Fig. 93 Installing Assembled Sun Gear And Driving Shell On Output Shaft

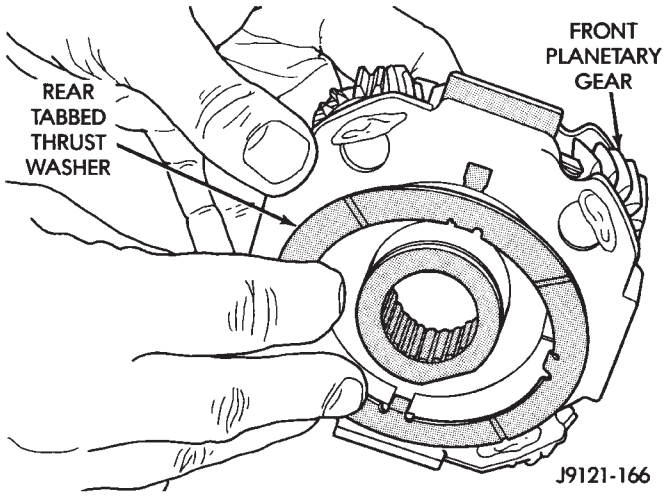

Fig. 94 Installing Rear Thrust Washer On Front Planetary Gear

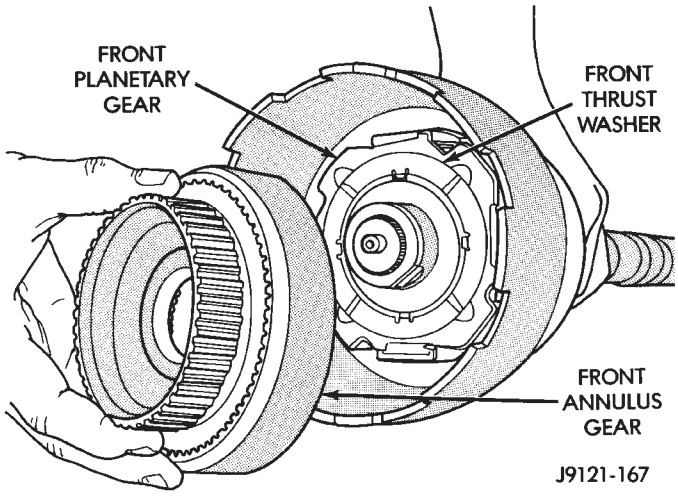

Fig. 95 Installing Front Planetary And Annulus Gears

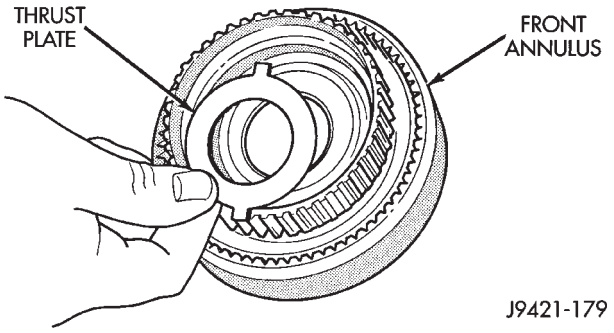

Fig. 96 Positioning Thrust Plate On Annulus Support

97). **Align flat on washer with flat on planetary hub. Also be sure washer tab is facing up.**

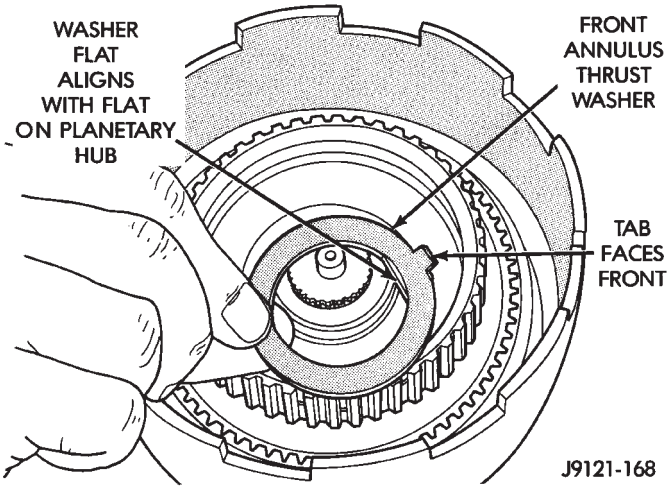

Fig. 97 Installing Front Annulus Thrust Washer

(20) Install front annulus snap ring (Fig. 98). Use snap ring pliers to avoid distorting ring during installation. Also be sure ring is fully seated.

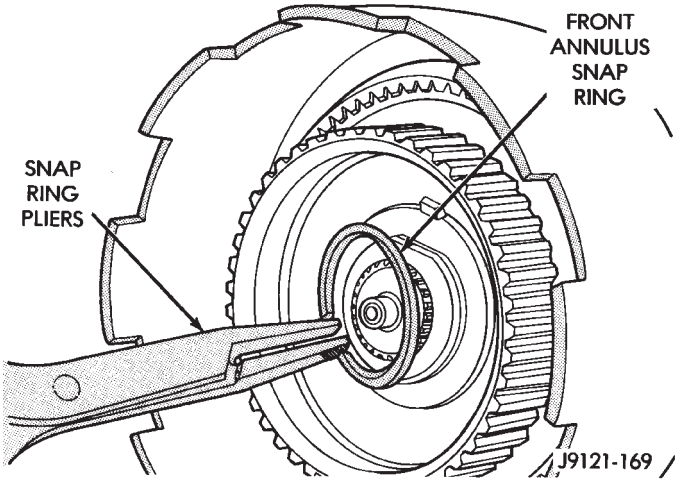

Fig. 98 Installing Front Annulus Snap Ring

(21) Install planetary selective snap ring with snap ring pliers (Fig. 99). Be sure ring is fully seated.

(22) Turn planetary geartrain assembly over so driving shell is facing workbench. Then support geartrain on wood block positioned under forward end of output shaft. This allow geartrain components to move forward for accurate end play check.

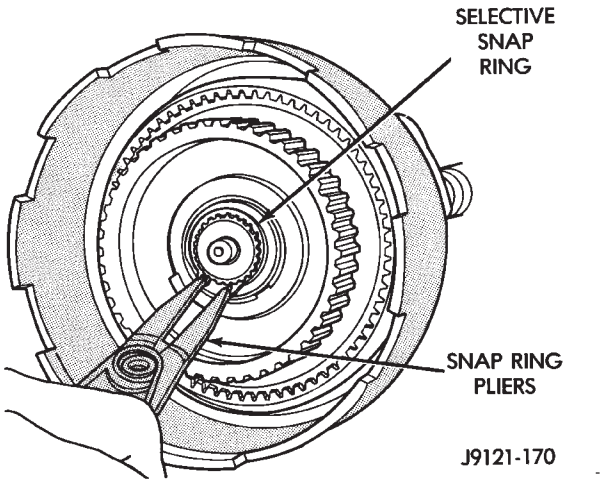

Fig. 99 Installing Planetary Selective Snap Ring

(23) Check planetary geartrain end play with feeler gauge (Fig. 100). Gauge goes between shoulder on output shaft and end of rear annulus support.

(24) Geartrain end play should be 0.12 to 1.22 mm (0.005 to 0.048 in.). If end play is incorrect, snap ring (or thrust washers) may have to be replaced. Snap ring is available in three different thicknesses for adjustment purposes.

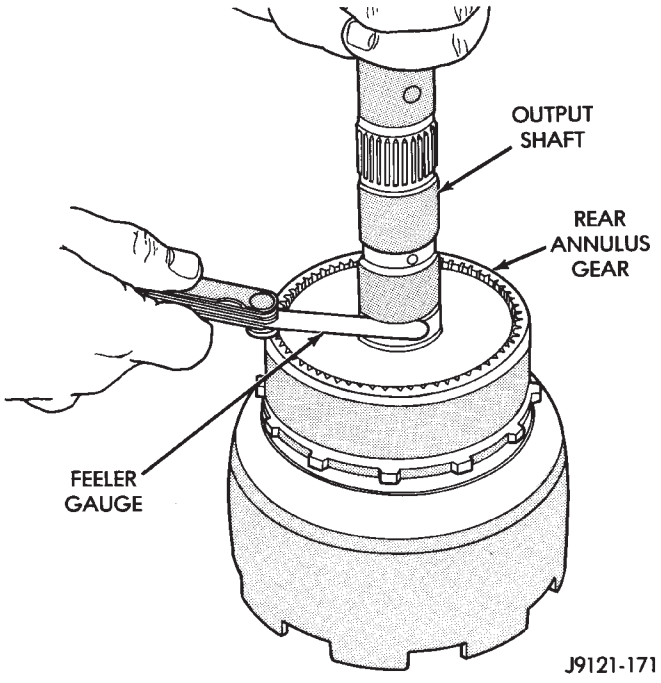

Fig. 100 Checking Planetary Geartrain End Play

FRONT SERVO AND BAND OVERHAUL

FRONT SERVO DISASSEMBLY (FIG. 101)

(1) Remove small snap ring from servo piston.
(2) Remove piston, rod, springs and guide.
(3) Remove and discard servo piston rings and O-ring.

FRONT SERVO AND BAND INSPECTION

Clean the servo components with solvent and dry them with compressed air.

Inspect the servo components. Replace the springs if collapsed, distorted or broken. Replace the guide, rod and piston if cracked, bent, or worn. Discard the servo snap ring if distorted or warped.

Replace the front band if distorted, the lining is burned or flaking off, or excessively worn.

Check the servo piston bore for wear. Replace the piston and rod as an assembly if either part is worn or damaged.

Replace any servo component if doubt exists about its condition. Do not reuse suspect parts.

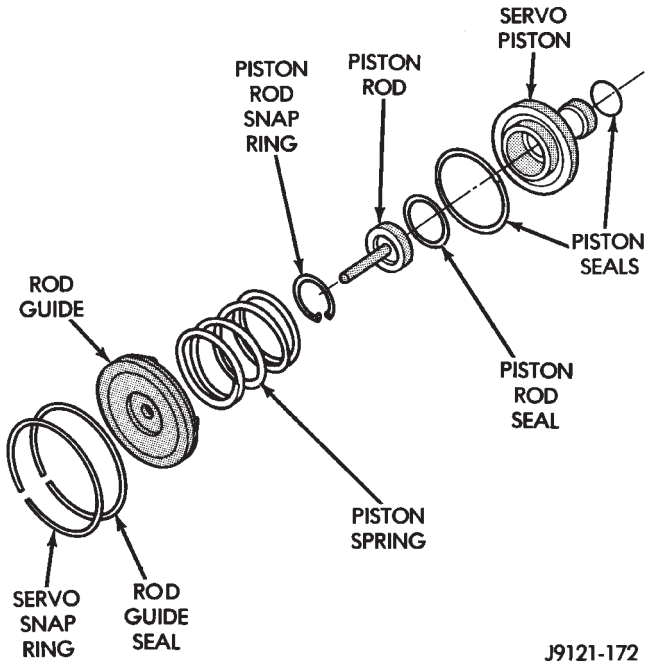

Fig. 101 Front Servo Components

ASSEMBLING FRONT SERVO PISTON

(1) Lubricate servo parts with transmission fluid.
(2) Install new O-ring on servo piston rod.
(3) Install new seal on piston rod guide and install new seal rings on piston.
(4) Assemble rod, piston, servo springs and snap ring (Fig. 101).

REAR SERVO AND BAND OVERHAUL

REAR SERVO PISTON DISASSEMBLY

(1) Remove seal from servo piston. Note which way seal lip faces for assembly reference.
(2) Compress cushion spring in vise only enough to allow piston plug snap ring removal (Fig. 102). Use wood block between vise jaws and end of piston plug to keep plug aligned and in position.
(3) Remove snap ring from end of piston plug (Fig. 102).
(4) Open vise and remove wood block, piston plug, cushion spring and servo piston.

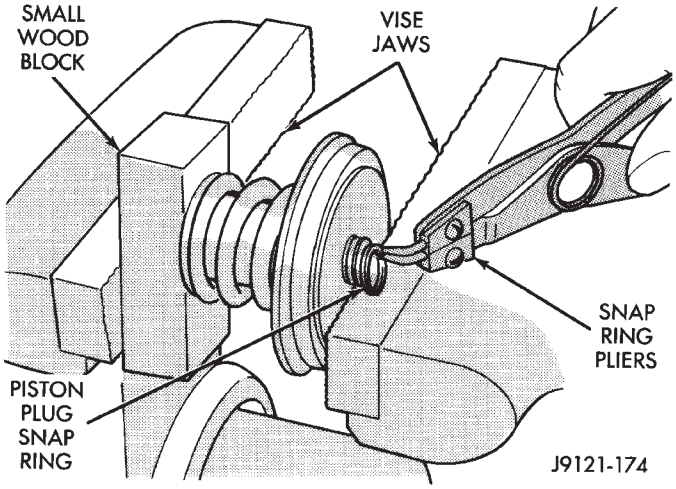

Fig. 102 Removing/Installing Servo Piston Plug Snap Ring

REAR SERVO INSPECTION

Clean the servo components with solvent and dry them with compressed air.

Check rear band condition. Replace the band if distorted, the lining is burned or flaking off, or the lining is excessively worn.

On 30RH models, inspect the rear band link (Fig. 103). Replace the link if bent, or damaged. Check the band reaction pin. Replace the O-rings if they are cut, or torn. Minor pin scoring can be cleaned up with crocus cloth. However, replace the pin if worn, severely scored, or cracked.

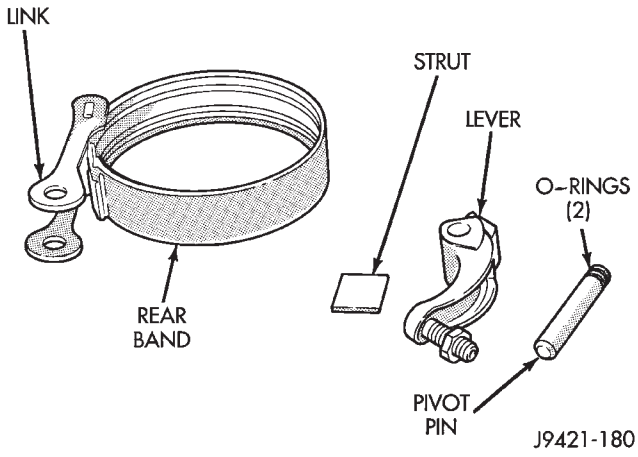

Fig. 103 Rear Band Components (30RH Shown)

Inspect the servo components (Fig. 104). Replace the servo and cushion springs if collapsed, distorted or broken. Replace the plug or piston if cracked, bent, or worn. Discard the servo snap ring and spring retainer if distorted or warped.

If doubt exists about the condition of any servo component, replace it. Do not reuse suspect parts.

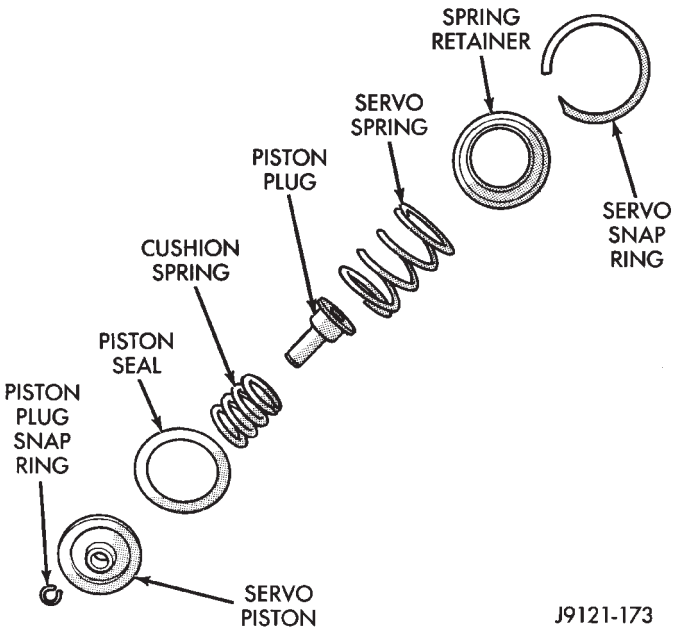

Fig. 104 Rear Servo Components

ASSEMBLING REAR SERVO PISTON

(1) Assemble piston plug, cushion spring and piston (Fig. 104).

(2) Compress cushion spring in vise and install piston plug snap ring.

(3) Install new seal on piston. Be sure seal lip is toward servo bore (Fig. 105).

(4) Lubricate piston seal with petroleum jelly. Lubricate other servo parts with transmission fluid.

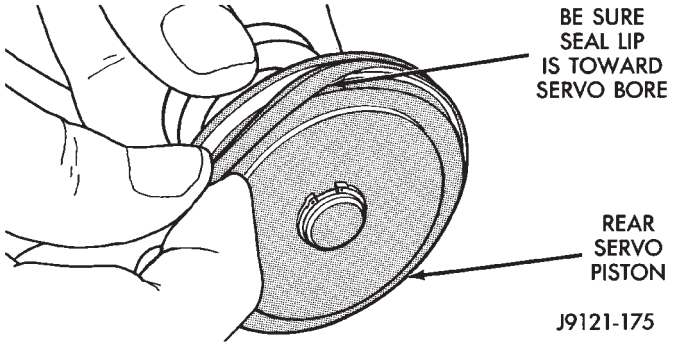

Fig. 105 Installing Rear Servo Piston Seal

VALVE BODY DISASSEMBLY AND INSPECTION

CAUTION: Do not clamp any part of the valve body assembly (Fig. 106) in a vise. This practice will distort the valve body and transfer plate resulting in valve bind. Slide valves and plugs out carefully. Do not use force at any time. The valves and valve body will be damaged if force is used. Also tag or mark the valve body springs for reference as they are removed. Do not allow them to become intermixed.

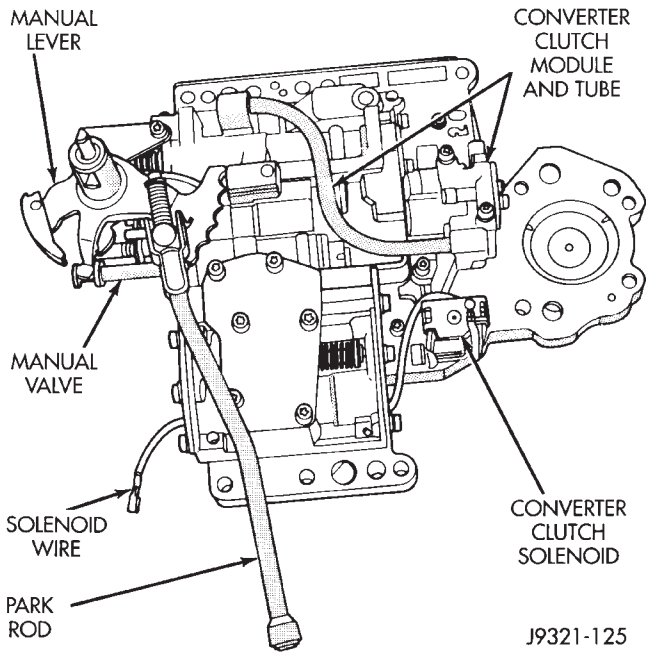

Fig. 106 Valve Body Assembly

(1) Remove screws attaching adjusting screw bracket to valve body and transfer plate. Hold bracket firmly against spring force while removing last screw.

(2) Remove adjusting screw bracket, line pressure adjusting screw, pressure regulator spring and switch valve spring (Fig. 107). **Do not remove throttle pressure adjusting screw from bracket and do not disturb adjusting screw settings during removal.**

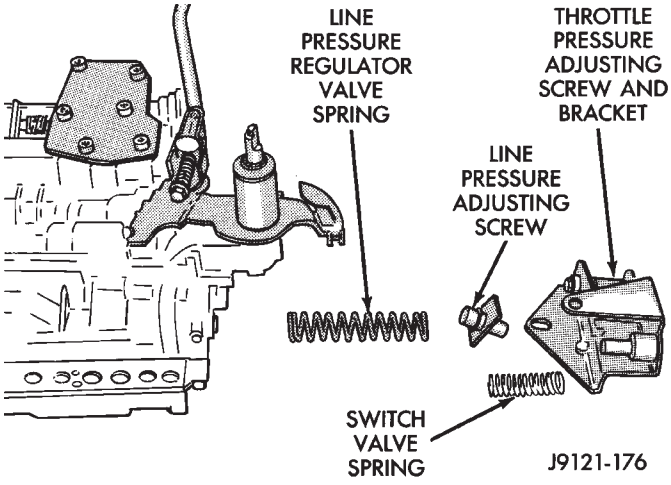

Fig. 107 Adjusting Screw Bracket And Spring Removal

(3) Secure detent ball and spring in housing with retainer tool 6583 (Fig. 108).

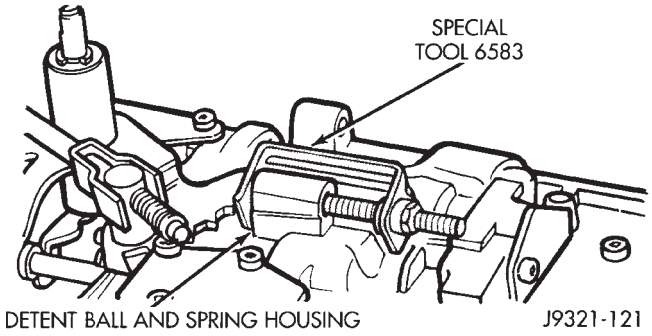

Fig. 108 Securing Detent Ball And Spring With Retainer Tool

(4) Remove manual shaft E-clip and washer (Fig. 109).

(5) Pull manual shaft and park rod assembly upward out of valve body and off throttle lever (Fig. 109).

(6) Remove Retainer Tool 6583. Then remove and retain detent ball and spring.

(7) Remove throttle lever (Fig. 109).

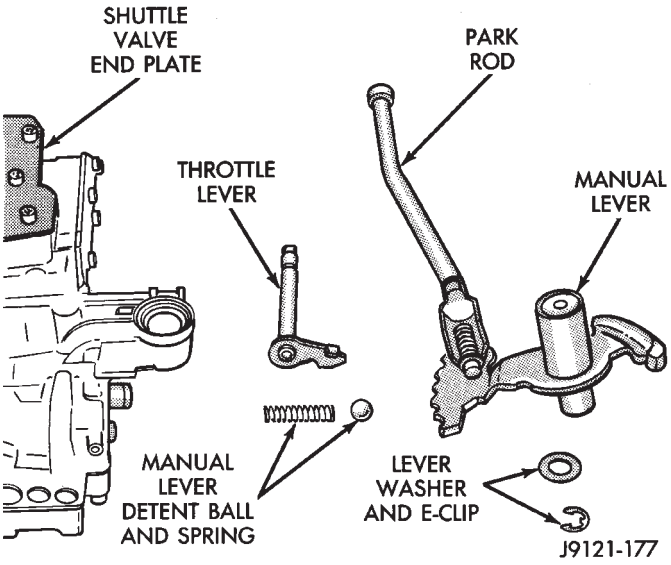

Fig. 109 Removing Manual And Throttle Levers

(8) Remove park rod E-clip and separate rod from manual lever (Fig. 110).

(9) Remove screws attaching converter clutch module to valve body and remove module and connecting tube (Fig. 111).

(10) Turn valve body over so transfer plate is facing upward (Fig. 112). With valve body in this position, valve body check balls will remain in place and not fall out when transfer plate is removed.

(11) Remove screws attaching transfer plate to valve body (Fig. 112).

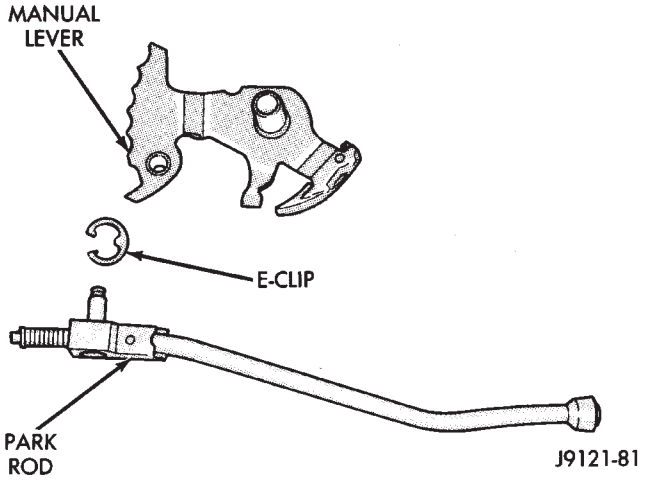

Fig. 110 Park Rod Removal

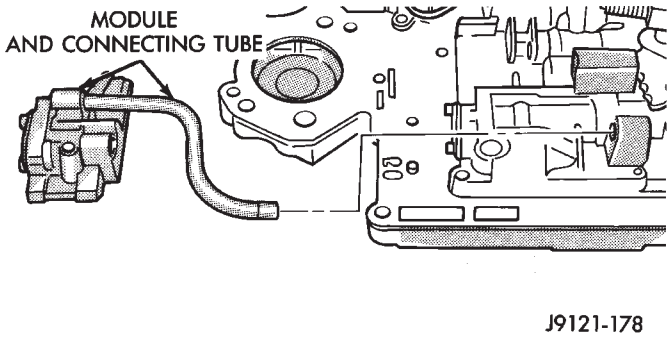

Fig. 111 Clutch Module And Connecting Tube Removal/Installation

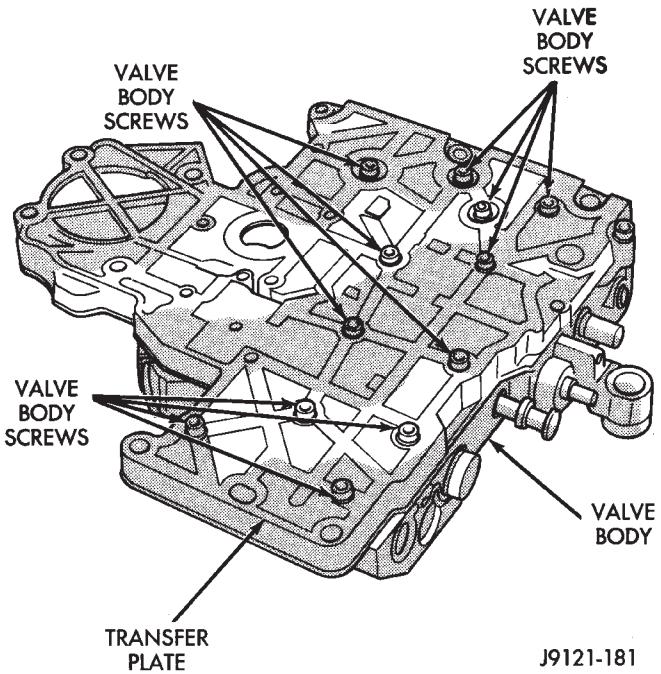

Fig. 112 Valve Body-To-Transfer Plate Screw Locations

(12) Remove transfer plate and separator plate from valve body. Note position of filter and clutch solenoid for reference (Fig. 113). Remove valve body check balls. Note that check balls will be steel on very early production models, or plastic on later production models.

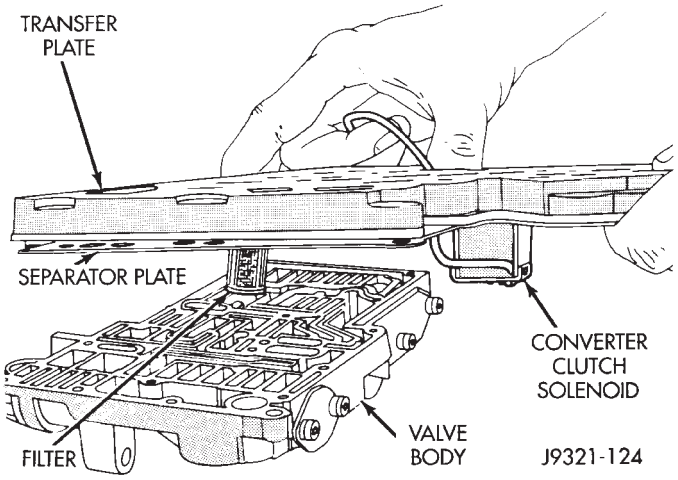

Fig. 113 Transfer Plate Removal/Installation

(13) Position transfer plate on bench so separator plate, filter and lockup solenoid are facing up. This will avoid having rear clutch and rear servo check balls fall out when plates are separated.

(14) Remove screws attaching separator plate to transfer plate.

(15) Remove converter clutch solenoid from separator plate (Fig. 114). A T25 torx bit is required to remove solenoid attaching screw.

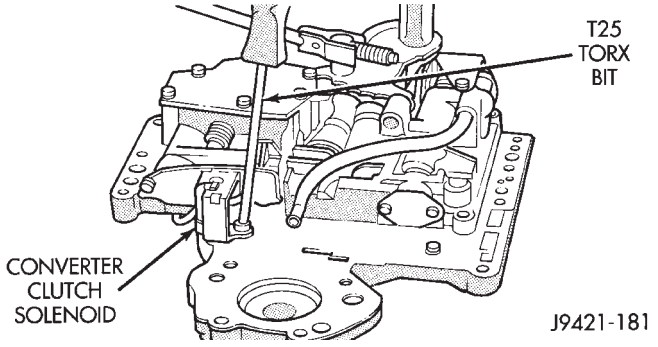

Fig. 114 Converter Clutch Solenoid Removal

(16) Note position of filter, solenoid and rear clutch/rear servo check balls for assembly reference (Fig. 115). Clutch and servo check balls will be steel on very early production, or plastic on later production models.

(17) Remove shuttle valve end plate (Fig. 116).

(18) Remove shuttle valve E-clip and remove secondary spring and spring guides from end of valve (Fig. 116).

(19) Remove governor valve end plate (Fig. 117).

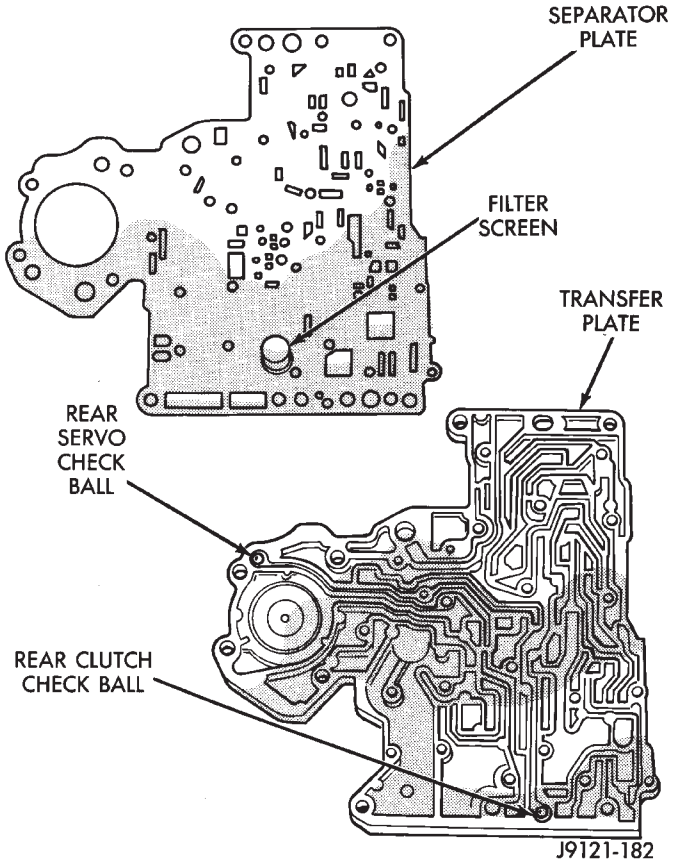

Fig. 115 Transfer And Separator Plates

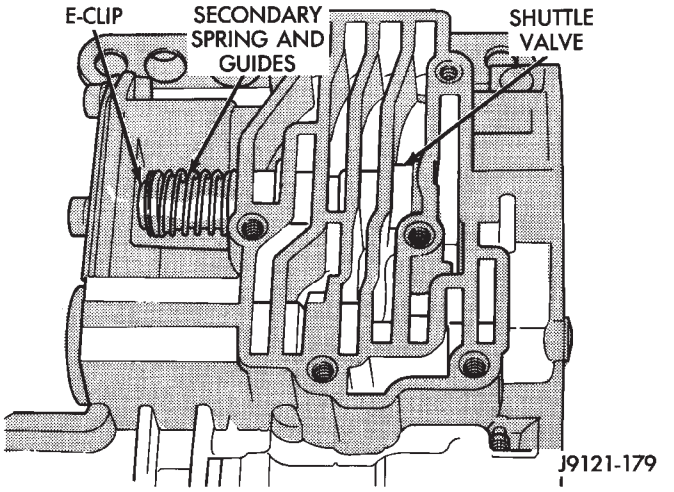

Fig. 116 Shuttle Valve E-Clip And Secondary Spring Location

(20) Remove switch valve and pressure regulator valve from valve body (Fig. 117).

(21) Remove throttle valve and spring, kickdown valve and detent and manual valve from valve body (Fig. 117).

(22) Remove 1-2 and 2-3 shift valve governor plugs from valve body (Fig. 117).

(23) Remove shuttle valve throttle plug, primary spring and shuttle valve from valve body (Fig. 117).

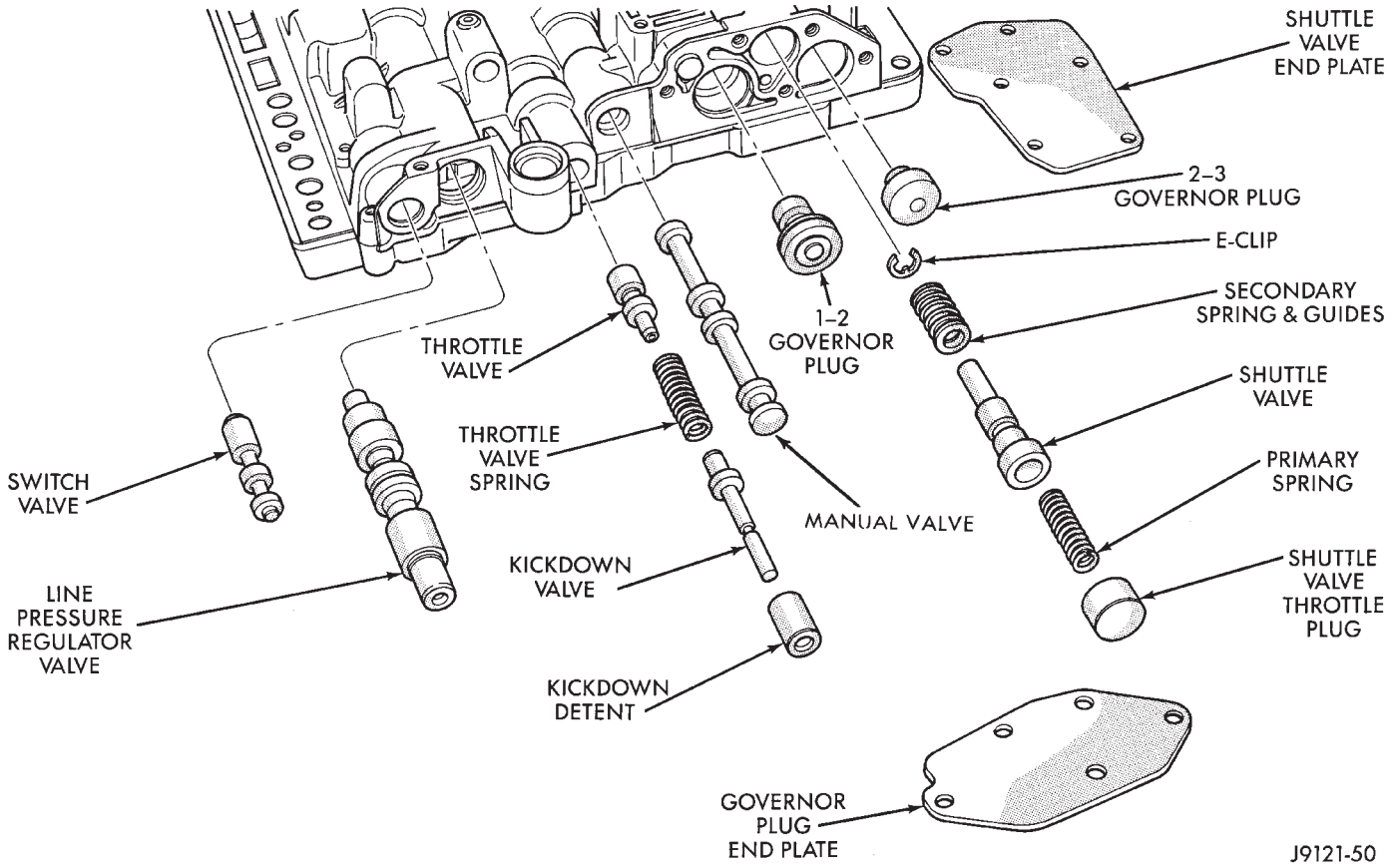

Fig. 117 Control Valves And Governor Plugs

(24) Remove 1-2 shift control valve and spring from valve body (Fig. 118).

(25) Remove 2-3 shift valve and spring from valve body (Fig. 118).

(26) Remove 1-2 shift valve and spring from valve body (Fig. 118).

(27) Remove regulator valve end plate (Fig. 118).

(28) Remove regulator valve line pressure plug, pressure plug sleeve, throttle pressure plug and spring (Fig. 118).

VALVE BODY CLEANING AND INSPECTION

The only serviceable valve body components are:

- park lock rod and E-clip
- switch valve and spring
- pressure adjusting screw bracket
- throttle valve lever
- manual lever
- manual lever shaft seal, washer, E-clip and detent ball
- fluid filter
- converter clutch solenoid

The remaining valve body components are serviced only as part of a complete valve body assembly.

Clean the valve body components in a parts cleaning solution only. Do not use gasoline, kerosene, or any type of caustic solution. Dry the parts with compressed air. Make sure all passages are clean and free from obstructions.

Do not use rags or shop towels to wipe off valve body components. Lint from these materials will adhere to the valve body components. Lint will interfere with valve operation and may clog filters and fluid passages.

Inspect the throttle and manual valve levers and shafts. Do not attempt to straighten a bent shaft or correct a loose lever. Replace these components if worn, bent, loose or damaged in any way.

Inspect all of the valve body mating surfaces for scratches, nicks, burrs, or distortion. Use a straightedge to check surface flatness. Minor scratches may be removed with crocus cloth using only very light pressure.

Minor distortion of a valve body mating surface may be corrected by smoothing the surface with crocus cloth. The cloth should be in sheet form and be positioned on a surface plate, sheet of plate glass, or equally flat surface. However, if distortion is severe or any surfaces are heavily scored, the valve body will have to be replaced.

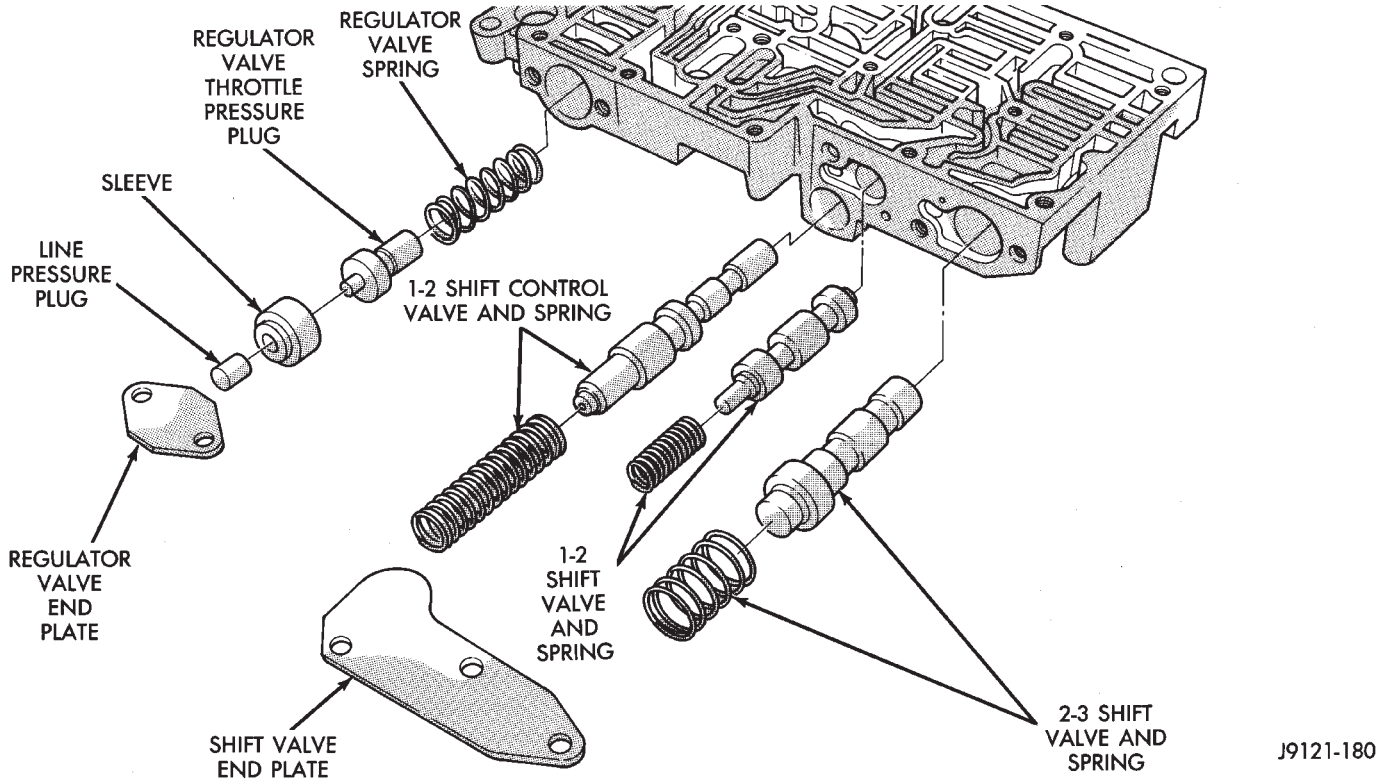

Fig. 118 Shift Valves And Pressure Regulator Plugs

CAUTION: The throttle valve, shuttle valve plug, 1-2 shift valve and 1-2 governor plug are made of coated aluminum. Aluminum components can be identified by the dark color of the special coating applied to the surface (or by testing with a magnet). DO NOT polish or sand aluminum valves or plugs with any type of material, or under any circumstances. This practice might damage the special coating and cause the valves and plugs to stick and bind.

Inspect the valves and plugs for scratches, burrs, nicks, or scores. Also inspect the coating on the aluminum valves and plugs (Fig. 119). If the coating is damaged or worn through, the valve (or valve body) should be replaced.

Aluminum valves and plugs should not be sanded or polished under any circumstances. However, minor burrs or scratches on steel valves and plugs can be removed with crocus cloth but do not round off the valve or plug edges. Squareness of these edges is vitally important. These edges prevent foreign matter from lodging between the valves, plugs and bore.

Inspect all the valve and plug bores in the valve body. Use a penlight to view the bore interiors. Replace the valve body if any bores are distorted or scored. Inspect all of the valve body springs. The springs must be free of distortion, warpage or broken coils.

Trial fit each valve and plug in its bore to check freedom of operation. When clean and dry, the valves and plugs should drop freely into the bores. Valve body bores do not change dimensionally with use. If the valve body functioned correctly when new, it will continue to operate properly after cleaning and inspection. It should not be necessary to replace a valve body assembly unless it is damaged in handling.

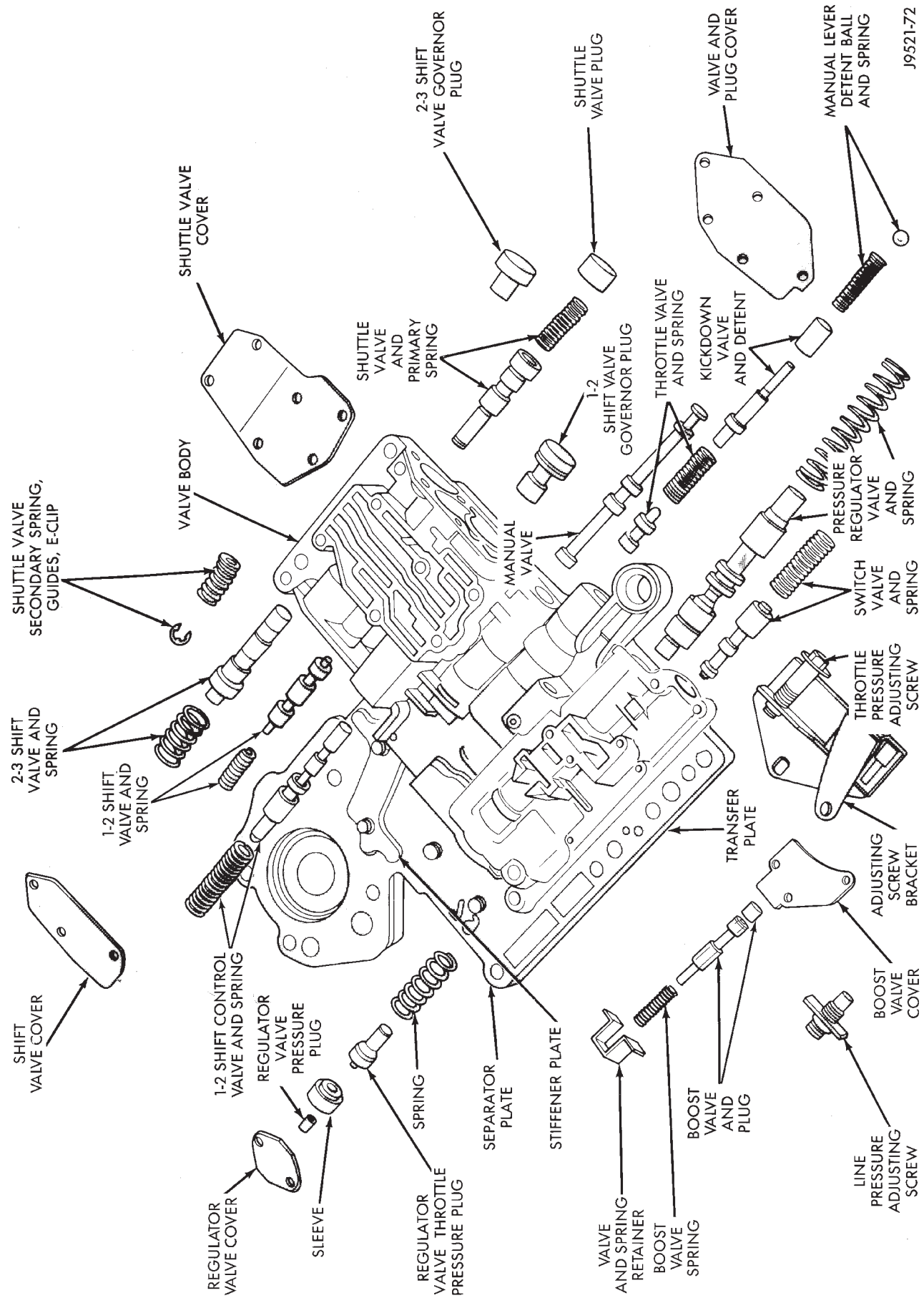

Fig. 119 Valve Body Components

VALVE BODY ASSEMBLY AND ADJUSTMENT

CAUTION: Do not force valves or plugs into place during reassembly. If the valve body bores, valves and plugs are free of distortion or burrs, the valve body components should all slide into place easily. In addition, do not overtighten the transfer plate and valve body screws during reassembly. Overtightening can distort the valve body resulting in valve sticking, cross leakage and unsatisfactory operation. Tighten valve body screws to recommended torque only.

(1) Lubricate valve body bores, valves and plugs with Mopar ATF Plus transmission fluid.

(2) Insert rear clutch and rear servo check balls in transfer plate (Fig. 120).

(3) Install filter screen in separator plate (Fig. 120).

(4) Align and install separator plate on transfer plate. Verify check ball position before installing separator plate on transfer plate.

(5) Install new O-ring on converter clutch solenoid and insert solenoid in separator plate (Fig. 120). Then secure solenoid in position with attaching screw. Tighten screw to 4 N·m 35 in. lbs.) torque.

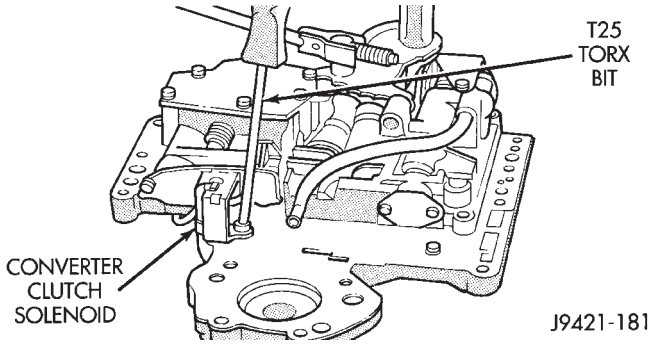

Fig. 120 Installing Converter Clutch Solenoid

(6) Position valve body so internal passages and check ball seats are facing upward. Then install check balls in valve body (Fig. 121). There are a total of seven check balls; The one large check ball is approximately 11/32 inch in diameter. The remaining check balls are approximately 1/4 inch in diameter. Note that check balls will be steel on some very early production models and plastic on later production models.

(7) Align and install assembled transfer and separator plates on valve body. Install and tighten valve body screws alternately in a diagonal pattern to 4 N·m (35 in. lbs.) torque.

(8) Assemble and install lockup module and components on valve body (Fig. 122).

(9) Assemble regulator valve line pressure plug, sleeve, throttle plug and spring (Fig. 113). Insert assembly in valve body and install end plate. Tighten end plate screws to 4 N·m (35 in. lbs.) torque.

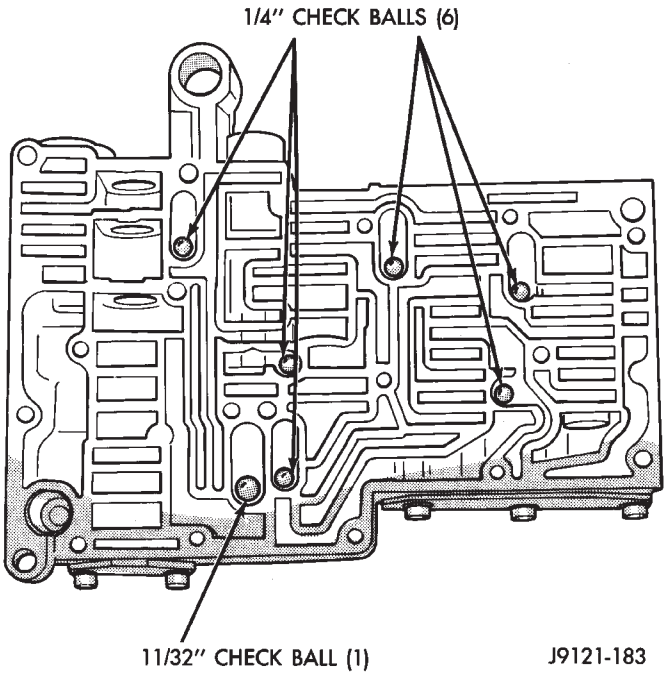

Fig. 121 Correct Position Of Valve Body Check Balls

(10) Install 1-2 and 2-3 shift valves and springs (Fig. 118).

(11) Install 1-2 shift control valve and spring (Fig. 118)

(12) Install shuttle valve as follows:

(a) Insert shuttle valve in bore.

(b) Insert plastic guides in shuttle valve secondary spring.

(c) Install spring on end of valve.

(d) Hold shuttle valve in place. Then compress secondary spring and install E-clip in groove at end of valve.

(e) Verify that spring and E-clip are properly seated before proceeding.

(13) Install shuttle valve cover plate (Fig. 118). Tighten end plate screws to 4 N·m (35 in. lbs.) torque.

(14) Install 1-2 and 2-3 valve governor plugs in valve body (Fig. 113). Then install shuttle valve primary spring and throttle plug.

(15) Align and install governor plug end plate on valve body and install end plate screws. Tighten screws to 4 N·m (35 in. lbs.) torque.

(16) Install manual valve (Fig. 117).

(17) Install throttle valve and spring. Then install kickdown valve and detent (Fig. 117).

(18) Install pressure regulator valve and switch valve in valve body.

(19) Install manual lever detent spring in housing. Place detent ball on end of spring and push ball and spring into housing. Secure ball and spring with Detent Retainer 6583 (Fig. 108).

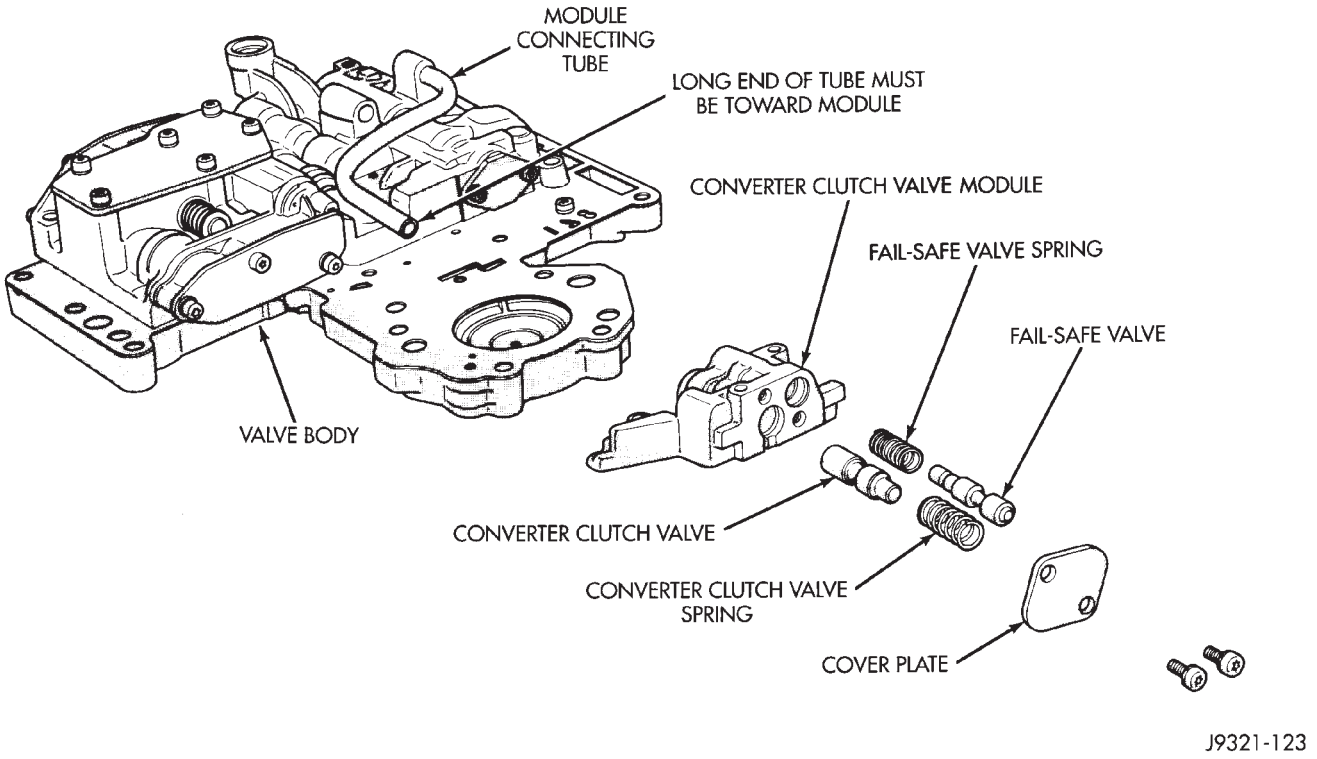

Fig. 122 Converter Clutch Module Components

(20) Insert line pressure adjusting screw in adjusting screw bracket (Fig. 107).

(21) Install spring on end of line pressure regulator valve.

(22) Install switch valve spring on tang at end of adjusting screw bracket (Fig. 107).

(23) Position adjusting screw bracket on valve body. Align valve springs and press bracket into place. Install short, upper bracket screws first and long bottom screw last. Verify that valve springs and bracket are properly aligned. Then tighten all three bracket screws to 4 N·m (35 in. lbs.) torque.

(24) Install module and connecting tube. Be sure long end of tube goes to module (Fig. 111). Tighten module screws to 4 N·m (35 in. lbs.) torque.

(25) Install throttle lever in valve body. Then install manual lever over throttle lever and start manual lever into valve body.

(26) Align manual lever detent with detent ball and align lever arm with manual valve. Hold throttle lever upward. Then press down on manual lever until lever is fully seated.

(27) Install manual lever seal, washer and retaining E-clip.

(28) Lubricate shaft of manual lever with light coat of petroleum jelly. This will help protect seal lip when manual shaft seal is installed.

(29) Verify that throttle lever is aligned with end of kickdown valve stem and that manual lever arm is engaged in manual valve (Fig. 123).

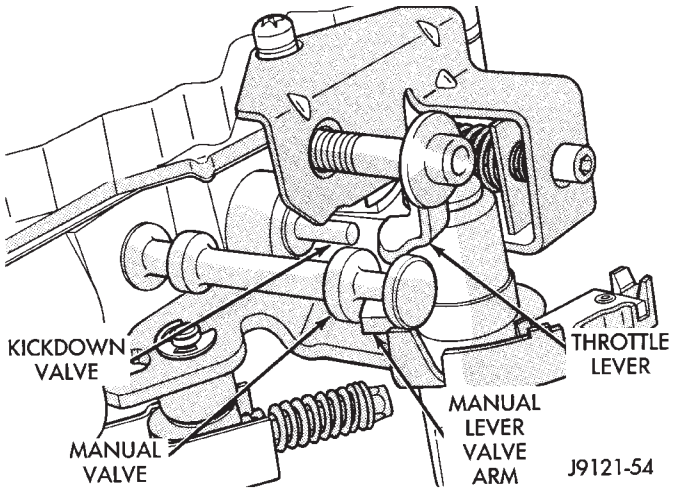

Fig. 123 Manual And Throttle Lever Alignment

(30) If line pressure and/or throttle pressure adjustment screw settings were not disturbed, continue with overhaul or reassembly. However, if adjustment screw settings **were** moved or changed, readjust as described in Valve Body Control Pressure Adjustment procedure.

VALVE BODY CONTROL PRESSURE ADJUSTMENTS

There are two control pressure adjustments on the valve body which are, line pressure and throttle pressure.

The two pressures are interdependent because each affects shift quality and timing. Each pressure ad-

justment must be performed properly and in the correct sequence. The correct sequence is line pressure adjustment first and throttle pressure adjustment last.

Line Pressure Adjustment

Measure distance from the valve body to the inner edge of the adjusting screw with an accurate steel scale (Fig. 124).

Distance should be 33.4 mm (1-5/16 in.).

If adjustment is required, turn the adjusting screw in, or out, to obtain required distance setting.

The 33.4 mm (1-5/16 in.) setting is an approximate setting. Because of manufacturing tolerances, it may be necessary to vary from this dimension to obtain desired pressure.

One complete turn of the adjusting screw changes line pressure approximately 1-2/3 psi (9 kPa). Turning the adjusting screw counterclockwise increases pressure while turning the screw clockwise decreases pressure.

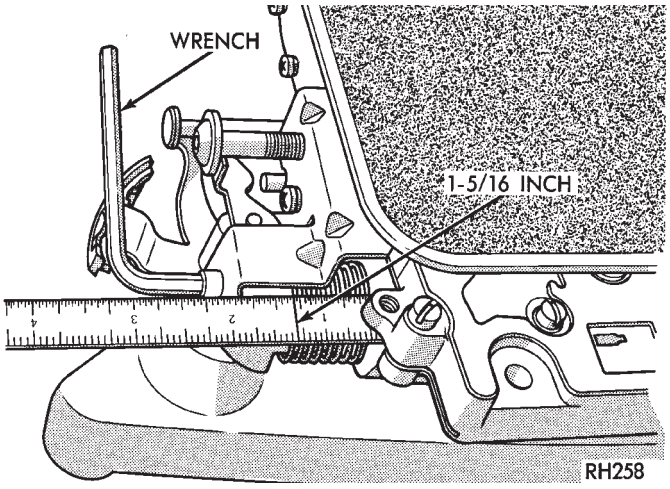

Fig. 124 Line Pressure Adjustment

Throttle Pressure Adjustment

Insert Gauge Tool C-3763 between the throttle lever cam and the kickdown valve stem (Fig. 125).

Push the gauge tool inward to compress the kickdown valve against the spring and bottom the throttle valve.

Maintain pressure against kickdown valve spring. Turn throttle lever stop screw until the screw head touches throttle lever tang and the throttle lever cam touches gauge tool.

The kickdown valve spring must be fully compressed and the kickdown valve completely bottomed to obtain correct adjustment.

TRANSMISSION ASSEMBLY TIPS

Do not allow dirt, grease, or foreign material to enter the case or transmission components during assembly. Keep the transmission case and components

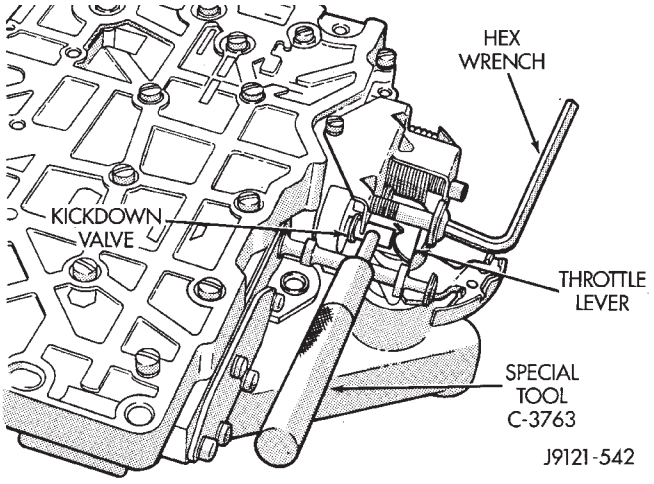

Fig. 125 Throttle Pressure Adjustment

clean. Also make sure the tools and workbench area used for assembly are equally clean.

Shop towels used for wiping off your hands and service tools must be made of **lint free** materials. Lint will adhere to transmission parts and could interfere with valve operation, or even restrict fluid passages.

Lubricate the transmission components with Mopar ATF Plus during reassembly. Use Mopar Door-Ease, or Ru-Glyde on seals and O-rings to ease installation.

Petroleum jelly can also be used to hold thrust washers and plates in position during assembly operations. However, **do not** use chassis grease, bearing grease, white grease, or similar lubricants on any transmission part. These types of lubricants can eventually block or restrict fluid passages and valve operation. Use petroleum jelly only.

Do not force parts into place. Most of the transmission components are easily installed by hand when properly aligned. If a part seems extremely difficult to install, it is either misaligned or incorrectly assembled. Also verify that thrust washers, thrust plates and seal rings are correctly positioned before assembly. These parts can interfere with proper assembly if mispositioned or "left out" by accident.

TRANSMISSION ASSEMBLY AND ADJUSTMENT PROCEDURES

SERVO INSTALLATION

(1) Install rear servo piston, spring and spring retainer. Compress rear servo spring and retainer with Compressor Tool C-3422-B or a large C-clamp.

(2) Install front servo piston, spring and rod guide. Compress front servo rod guide with Valve Spring Compressor C-3422-B and install servo snap ring.

OVERRUNNING CLUTCH INSTALLATION

(1) Examine bolt holes in overrunning clutch cam. Note that one hole is **not threaded** (Fig. 126). This hole must align with blank area in clutch cam bolt circle (Fig. 127).

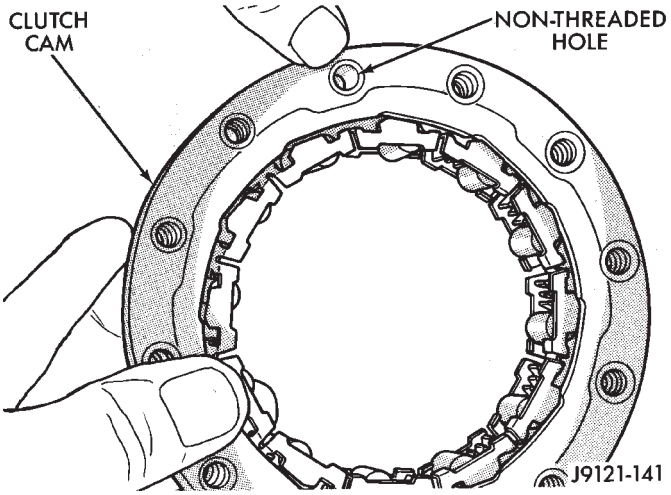

Fig. 126 Location Of Non-Threaded Hole In Clutch Cam

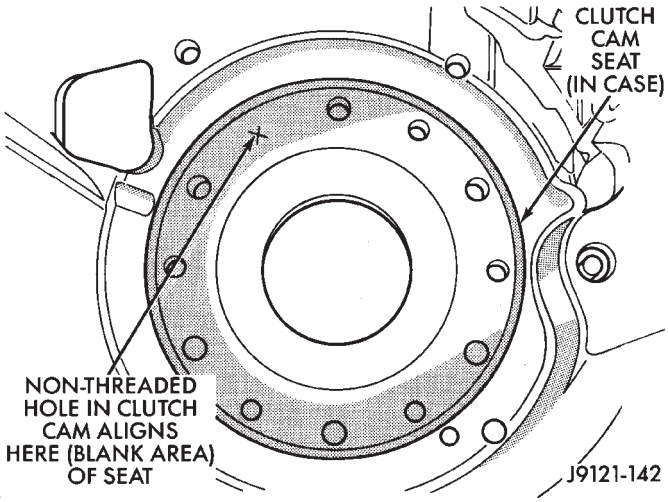

Fig. 127 Location Of Blank Area In Clutch Cam Seat Of Case

(2) Mark location of non threaded hole in clutch cam and blank area of case with paint stripe (Fig. 128).

(3) Align and install overrunning clutch cam in case (Fig. 128). **Be sure cam is correctly installed. Bolt holes in cam are slightly countersunk on one side. This side of cam faces rearward (toward rear support).**

(4) Partially install overrunning clutch in cam (Fig. 128).

(5) Verify that non threaded hole in clutch cam is properly aligned (Fig. 128). Check alignment by threading a clutch cam bolt into each hole. Adjust cam position if necessary before proceeding.

(6) Seat overrunning clutch in clutch cam after verifying correct cam alignment.

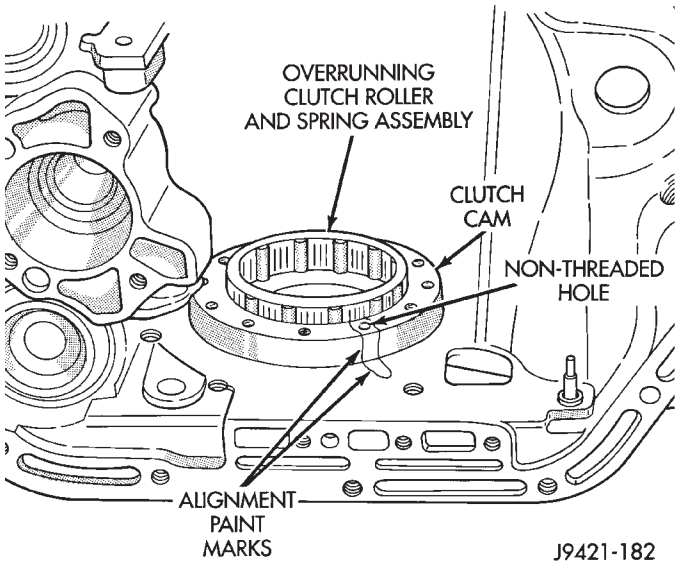

Fig. 128 Overrunning Clutch Cam Alignment

(7) Install overrunning clutch cam bolts. **Clutch cam bolts are shorter than rear support bolts.** Tighten cam bolts to 17 N·m (150 in. lbs. or 13 ft. lbs.) torque.

(8) Lubricate overrunning clutch rollers, springs and cam with ATF Plus transmission fluid.

REAR BAND, LOW-REVERSE DRUM AND REAR SUPPORT INSTALLATION

A different rear band and linkage is used in 30RH and 32RH transmissions.

The 30RH transmission has a single wrap rear band, one pivot pin and a band link to connect the lever (Fig. 129). The lever adjusting screw is in direct contact with the servo piston. A strut is used to connect the lever to the band lug.

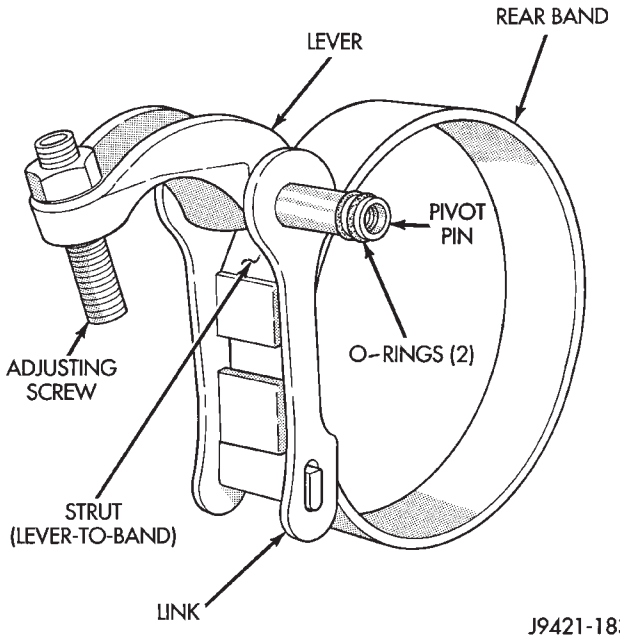

Fig. 129 Rear Band Components (30RH)

The 32RH transmission has a double wrap band, a pivot pin, and a reaction pin (Fig. 130). The band lever pivots against a lug on the band. A strut is not used. The reaction pin functions as the stop, or locating mechanism for the band lower lug.

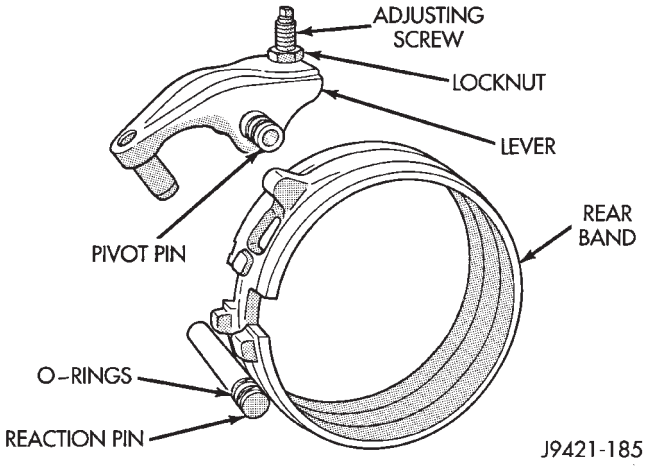

Fig. 130 Rear Band Components (32RH)

Rear Band Installation Procedure

(1) On 32RH transmission, install band components and low-reverse drum as follows:

(a) Install reaction pin in case (Fig. 131).

(b) Position band in case and seat band lug against reaction pin.

(c) Slide low-reverse drum through band (Fig. 132). Then tilt drum slightly and start clutch race into overrunning clutch rollers.

(d) Rotate drum in clockwise direction and push drum inward until race is seated in overrunning clutch.

(e) Install rear band lever (Fig. 133). Be sure lever pivot pin is fully seated in case afterward.

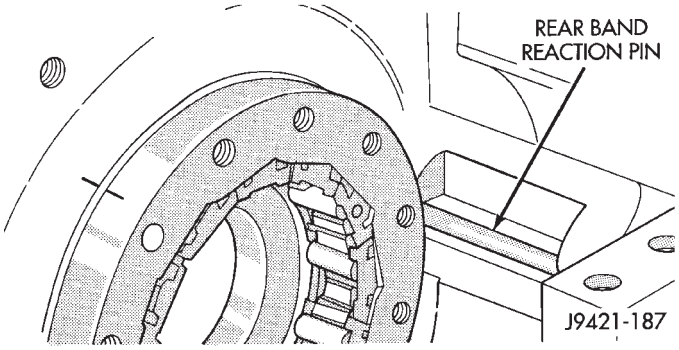

Fig. 131 Rear Band Reaction Pin Installation (32RH)

(2) On 30RH transmission, install band components and low-reverse drum as follows:

(a) Assemble band and link. Be sure that notch in one side of link is facing band (Fig. 134).

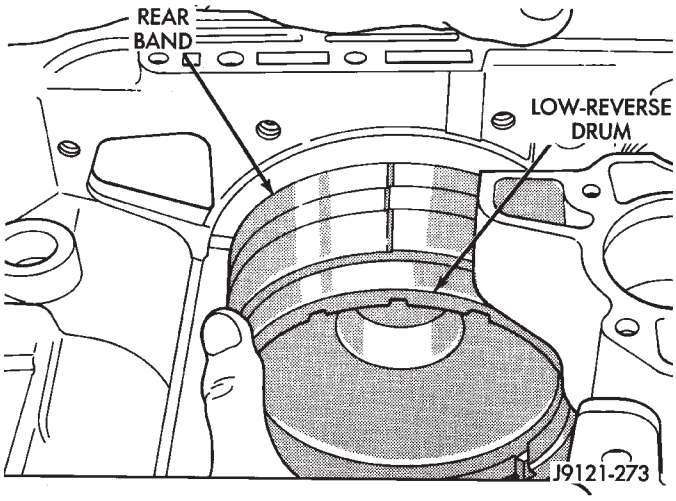

Fig. 132 Rear Band And Low-Reverse Drum Installation (32RH)

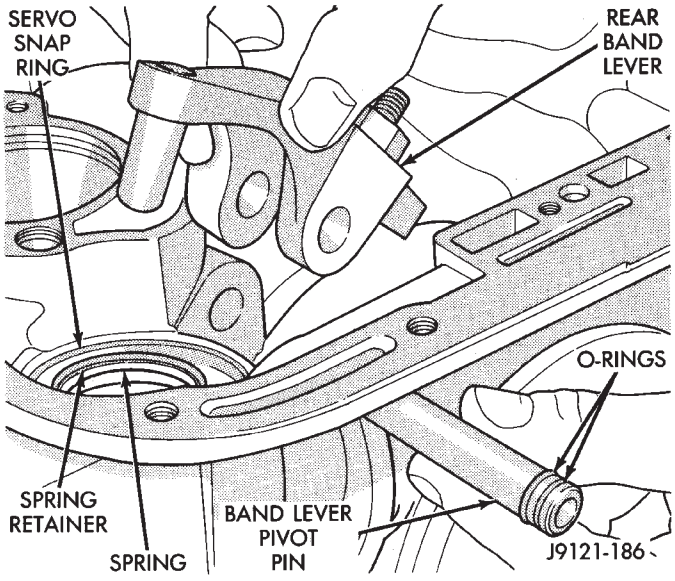

Fig. 133 Rear Band Lever And Pivot Pin Installation (32RH)

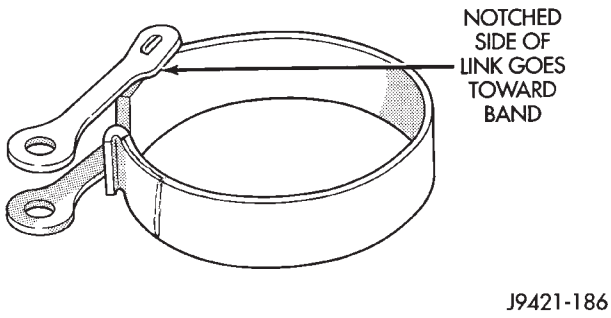

Fig. 134 Assembling Rear Band And Link (30RH)

(b) Position band and link in case (Fig. 135).

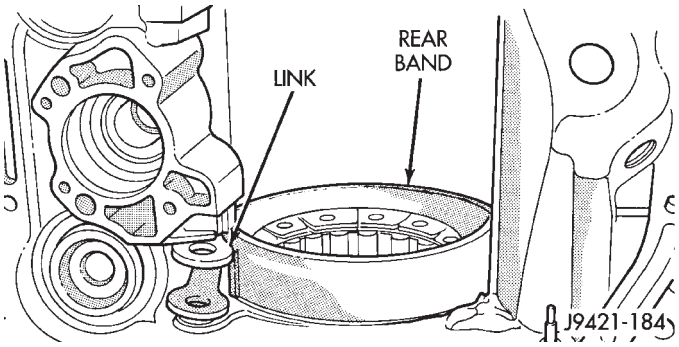

Fig. 135 Rear Band Positioned In Case (30RH)

(c) Slide low-reverse drum through band (Fig. 136). Then tilt drum slightly and start clutch race into overrunning clutch rollers.

(d) Rotate drum in clockwise direction and push drum inward until race is seated in overrunning clutch.

(e) Install rear band lever and pivot pin. Be sure lever pivot pin is fully seated in case afterward.

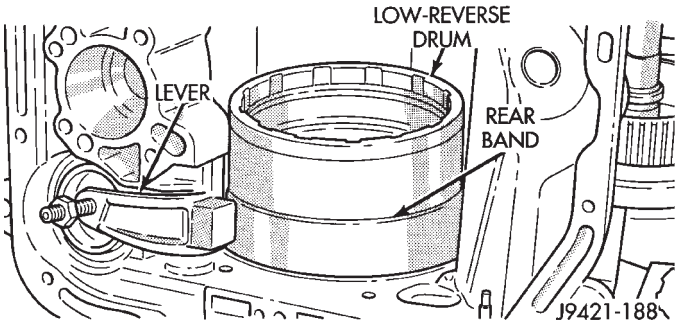

Fig. 136 Low-Reverse Drum And Band Lever Installation (30RH)

(3) Hold low-reverse drum in position and install rear support (Fig. 137)

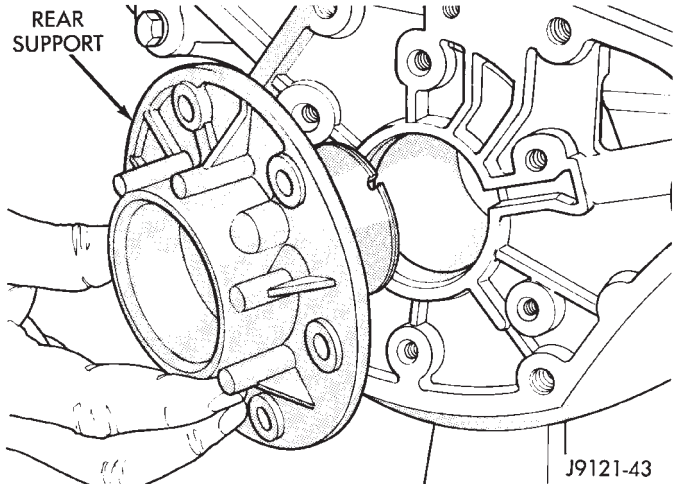

Fig. 137 Rear Support Installation

(4) Align support with punch marks made during disassembly.

(5) Install and tighten rear support bolts to 17 N·m (150 in. lbs.) torque.

(6) Install snap ring that retains low-reverse drum to hub of rear support (Fig. 138).

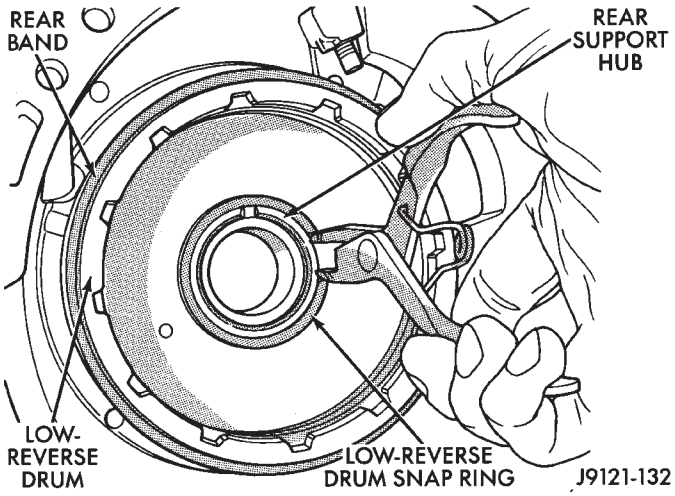

Fig. 138 Installing Low-Reverse Drum Snap Ring

PLANETARY GEARTRAIN AND OUTPUT SHAFT INSTALLATION

(1) Lubricate output shaft, rear support bore and low-reverse drum hub with transmission fluid.

(2) Install assembled output shaft and planetary geartrain in case (Fig. 139).

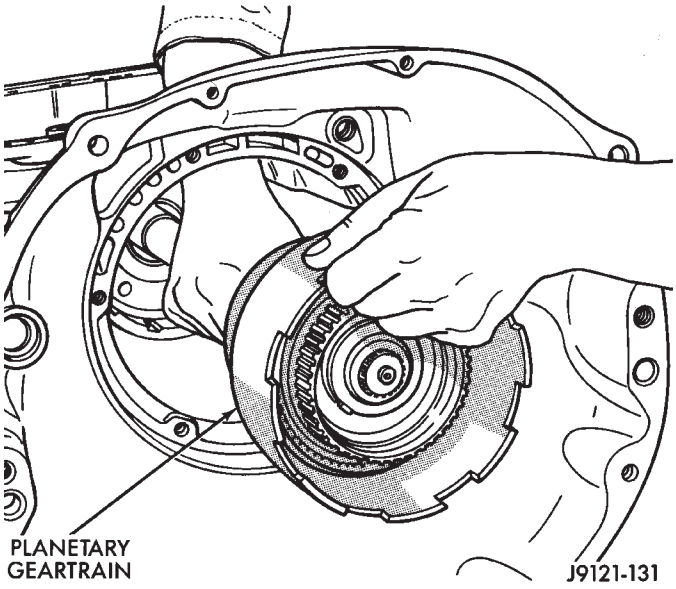

Fig. 139 Installing Output Shaft And Planetary Geartrain

(3) Align drive lugs on rear planetary gear with slots in low-reverse drum (Fig. 140). Then seat planetary assembly in drum.

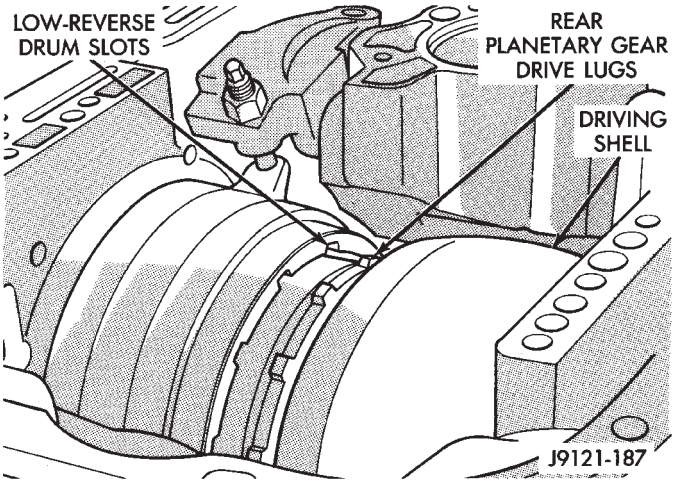

Fig. 140 Aligning/Seating Rear Planetary In Low-Reverse Drum

GOVERNOR AND PARK GEAR INSTALLATION

(1) Lubricate governor components and park gear seal rings with Mopar ATF Plus.

(2) Install governor filter in park gear and install governor body on gear. Align governor body on gear using marks made at disassembly.

(3) Install new seal rings on hub of park gear if necessary. Be sure ring with hooked ends is properly connected.

(4) Align and install governor/park gear assembly on output shaft as follows:

(a) **Note that output shaft in current transmission is spotfaced for governor valve end clearance (Fig. 141). Shaft must be indexed so that small end of governor valve will seat in this spotface. Install governor body and park as follows to ensure proper alignment and operation.**

(b) Rotate output shaft until spotface (at governor valve shaft hole) is facing upward (Fig. 141).

(c) Position valve bore in governor body over spotface on output shaft. Then align valve shaft holes in governor body and output shaft.

(d) Align splines in output shaft and park gear hub.

(e) Carefully push assembly into place in rear support (Fig. 142).

(f) Verify that governor valve shaft holes in output shaft and governor body are still in alignment. Reposition governor body and park gear if alignment is not correct.

(g) Tighten bolts attaching governor body to park gear to 11 N·m (95 in. lbs.) torque.

(5) Install first E-clip on governor valve shaft. Then install governor valve and shaft in governor body (Fig. 143). **Be sure valve shaft moves freely**

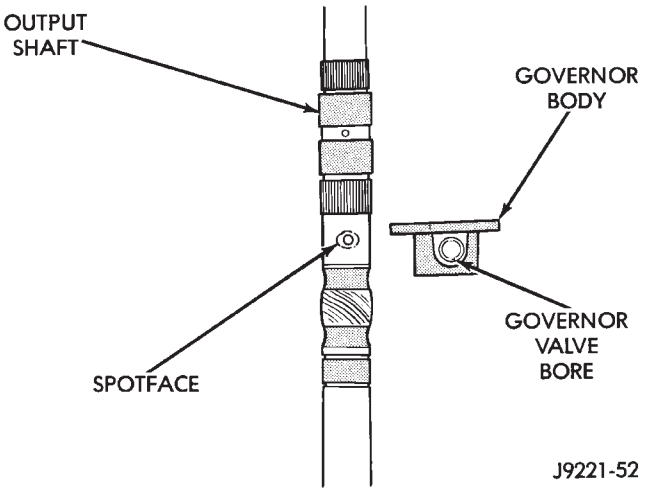

Fig. 141 Governor Valve And Output Shaft Spotface Alignment

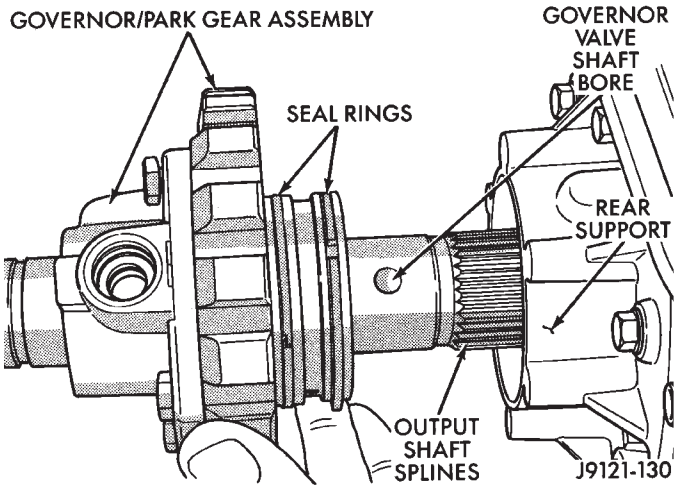

Fig. 142 Installing Governor Body And Park Gear

in valve and in output shaft. If valve shaft binds, governor/park gear is misaligned.

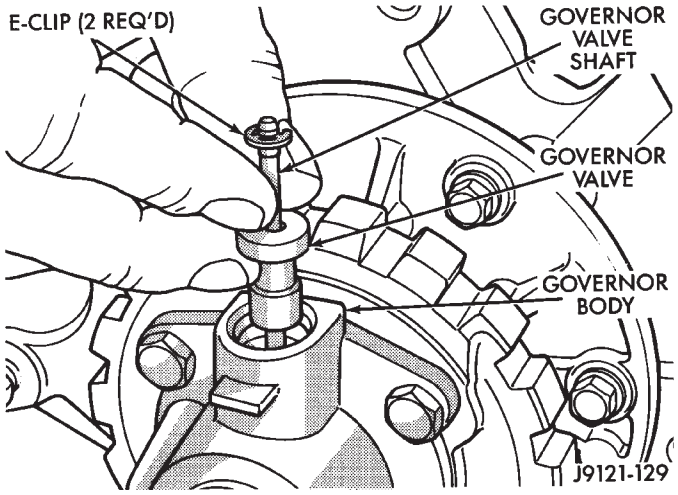

Fig. 143 Installing Governor Valve And Shaft

(6) Rotate output shaft until opposite end of governor valve shaft is facing upward. Then install re-

maining E-clip on governor valve shaft (Fig. 144). **Be very sure both E-clips are firmly seated on shaft.**

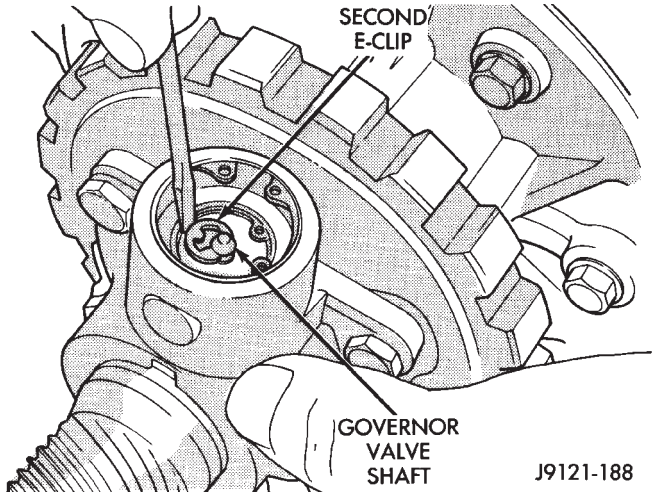

Fig. 144 Securing Governor Valve Shaft With New E-Clip

(7) Install snap ring that retains governor body on output shaft (Fig. 145).

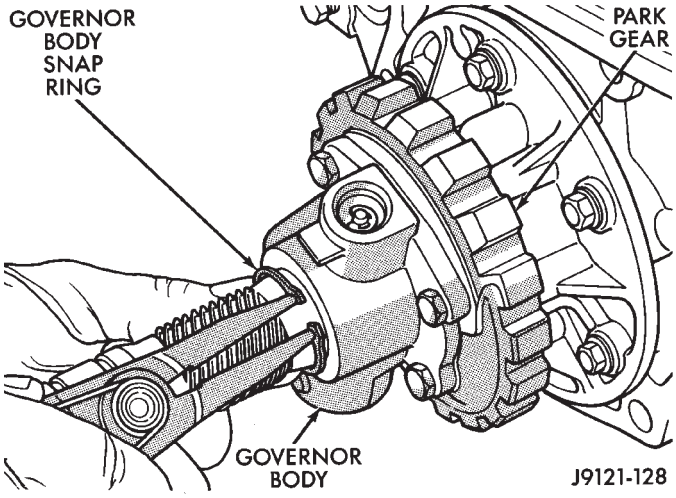

Fig. 145 Installing Governor Body Snap Ring

FRONT/REAR CLUTCH INSTALLATION

(1) Install output shaft thrust plate on shaft hub (Fig. 146). Use petroleum jelly to hold thrust plate in place.

(2) Check input shaft seal rings (Fig. 147). Verify that diagonal-cut ends of teflon seal ring are properly joined and ends of metal ring are correctly hooked together. Also be sure rings are installed in sequence shown.

(3) Check rear clutch thrust washer. Use additional petroleum jelly to hold washer in place if necessary.

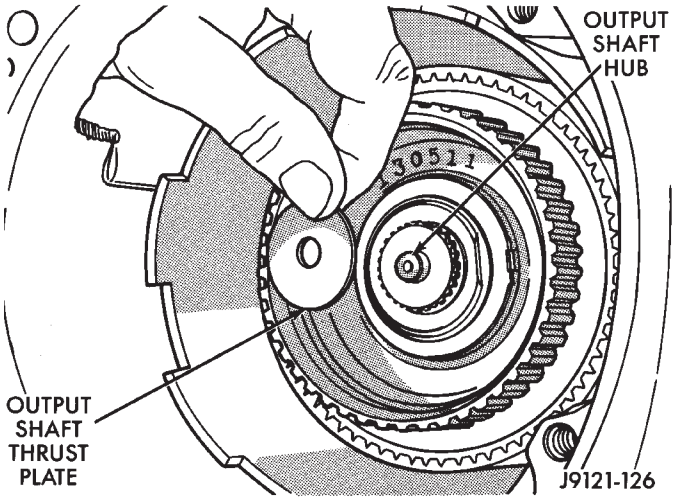

Fig. 146 Installing Output Shaft Thrust Plate

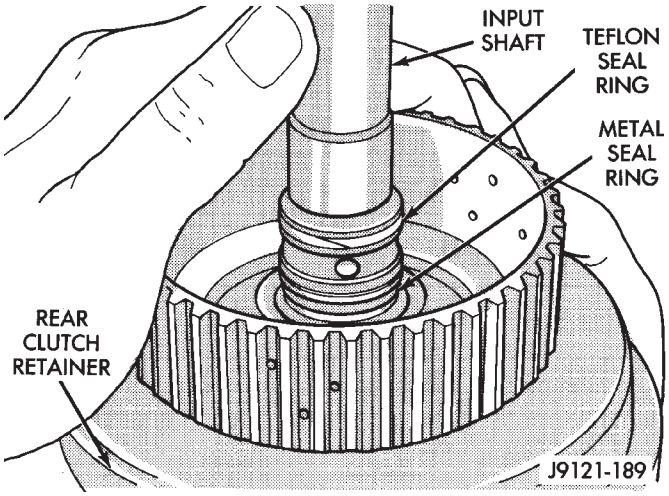

Fig. 147 Input Shaft Seal Ring Location

(4) Align clutch discs in front clutch and install front clutch on rear clutch (Fig. 148). Rotate front clutch retainer back and forth until completely seated on rear clutch.

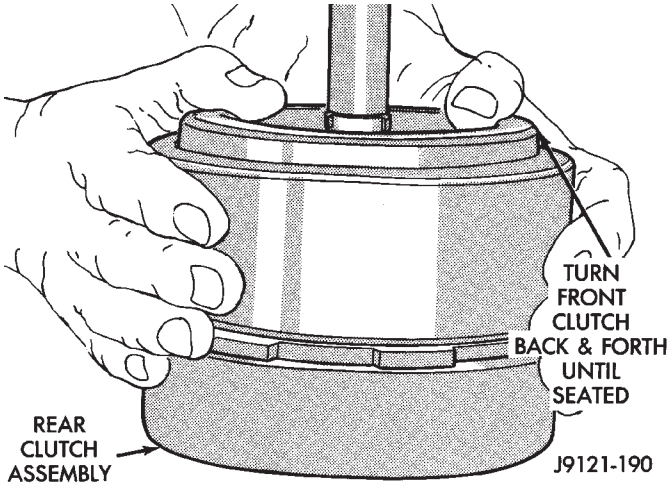

Fig. 148 Assembling Front And Rear Clutch Units

(5) Coat output shaft thrust washer with petroleum jelly. Then install washer in rear clutch hub (Fig. 149). Use enough petroleum jelly to hold washer in place. **Be sure grooved side of washer faces rearward (toward output shaft) as shown. Also note that washer only fits one way in clutch hub.**

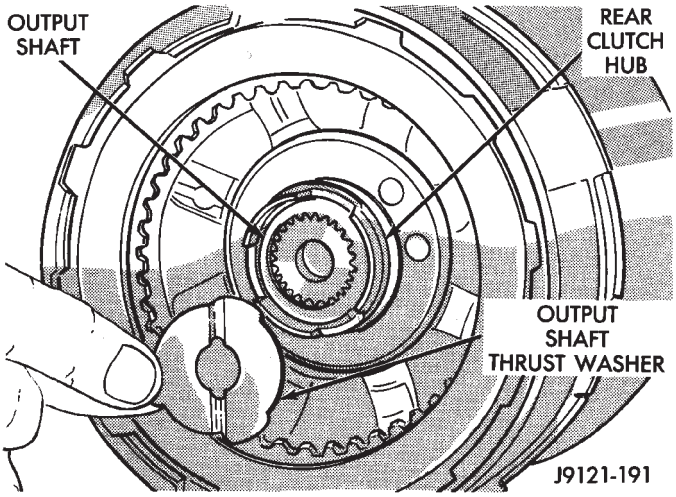

Fig. 149 Installing Output Shaft Thrust Washer

(6) Align drive teeth on rear clutch discs with small screwdriver (Fig. 150). This will make installation on front planetary easier.

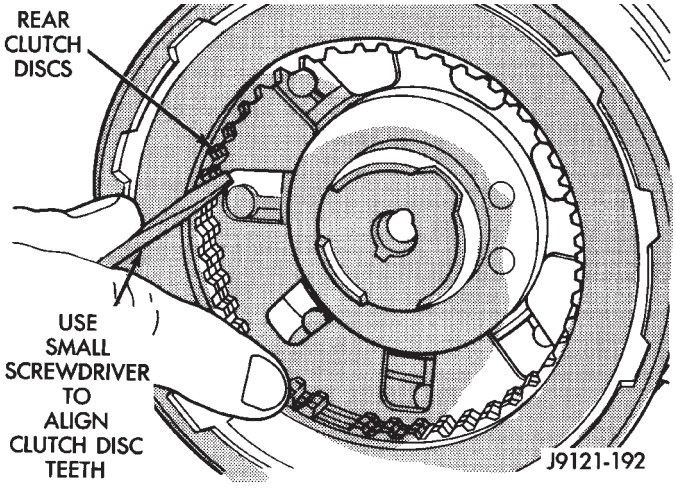

Fig. 150 Aligning Rear Clutch Disc Lugs

(7) Raise front end of transmission upward as far as possible and support case with wood blocks. Front/rear clutch and oil pump assemblies are easier to install if transmission is as close to upright position as possible.

(8) Install front and rear clutch units as assembly (Fig. 151). Align rear clutch with front annulus gear and install assembly in driving shell. **Be sure output shaft thrust washer and thrust plate are not displaced during installation.**

(9) Carefully work assembled clutches back and forth to engage and seat rear clutch discs on front annulus gear. Verify that front clutch drive lugs are fully engaged in slots of driving shell after installation.

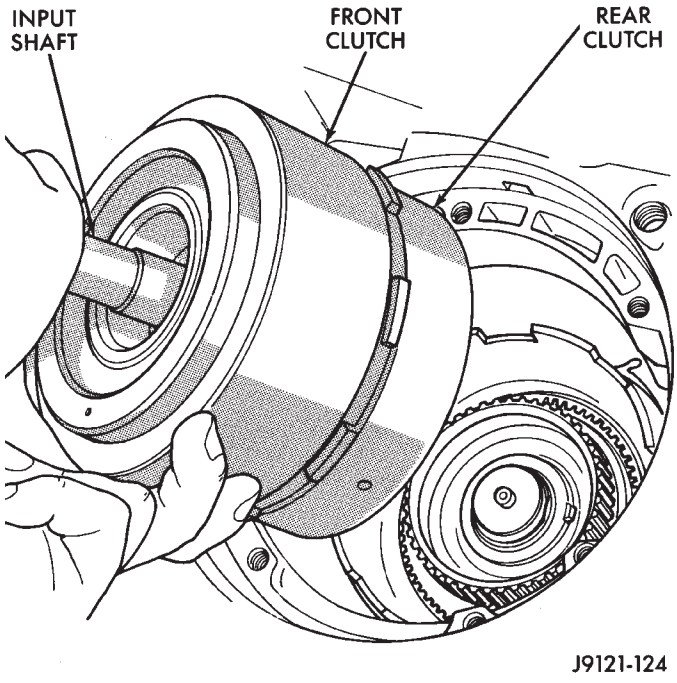

Fig. 151 Installing Front/Rear Clutch Assemblies

FRONT BAND AND OIL PUMP INSTALLATION

(1) Slide front band over front clutch retainer (Fig. 152).

(2) Insert front band reaction pin part way into case (Fig. 152).

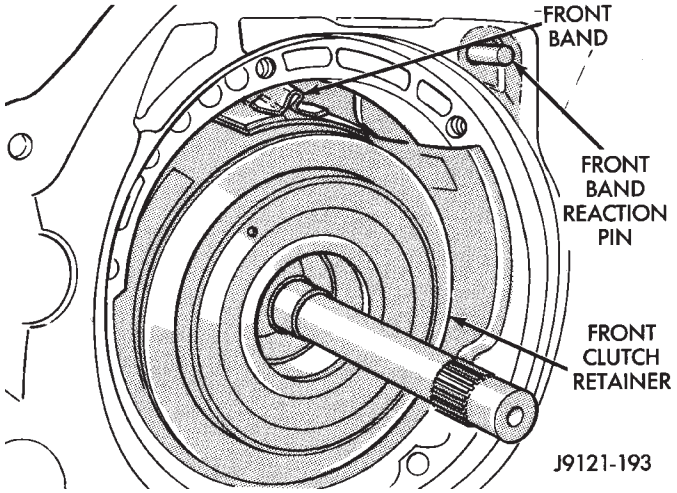

Fig. 152 Installing Front Band And Reaction Pin

(3) Install front band lever, strut, lever pin and adjusting screw (Fig. 153).

(4) Tighten front band adjusting screw until band just grips clutch retainer. Verify that front/rear clutches are still seated before continuing.

(5) Coat band lever pin access plug with sealer and install plug in converter housing (Fig. 154).

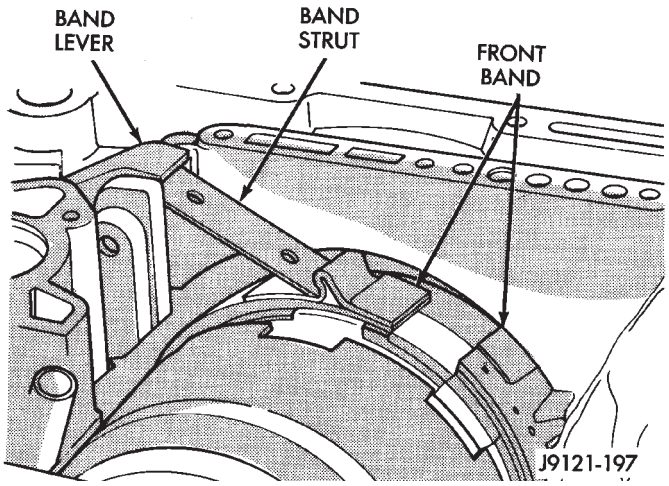

Fig. 153 Front Band Linkage Installation

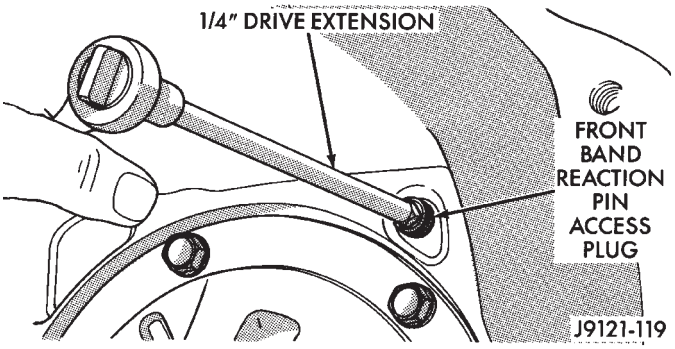

Fig. 154 Installing Front Band Pivot Pin Access Plug

(6) Verify that reaction shaft support hub seal rings are hooked together (Fig. 155).

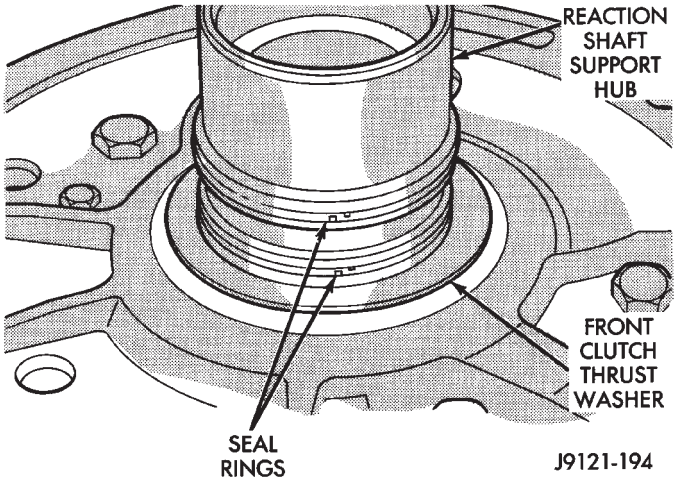

Fig. 155 Reaction Shaft Support Seal Rings

(7) Coat front clutch thrust washer with petroleum jelly to hold it in place. Then install washer over reaction shaft hub and seat it on pump (Fig. 156).

CAUTION: The thrust washer bore (I.D.), is chamfered on one side. Make sure the chamfered side is installed so it faces the pump.

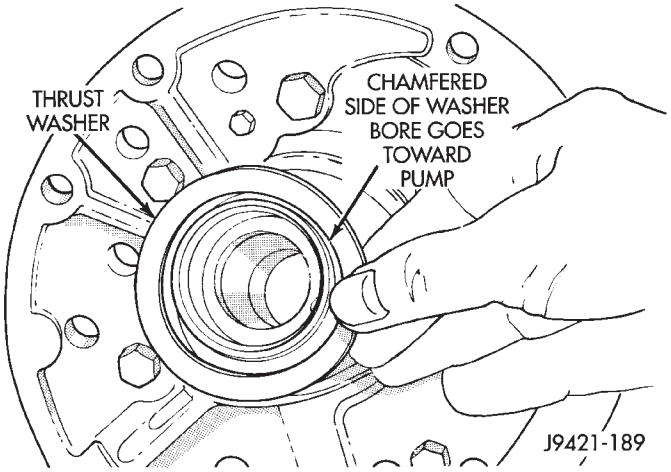

Fig. 156 Front Clutch Thrust Washer Installation

(8) Thread two Pilot Stud Tools C-3288-B into bolt holes in oil pump flange (Fig. 157).

(9) Align and install oil pump gasket (Fig. 157).

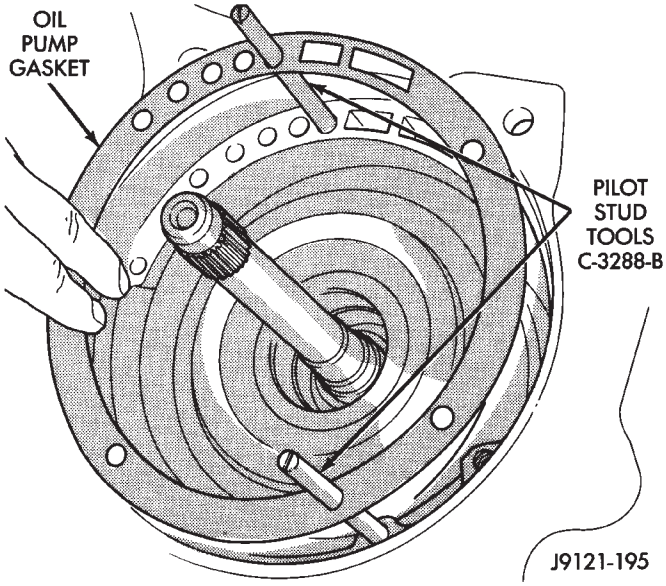

Fig. 157 Installing Pilot Studs And Oil Pump Gasket

(10) Lubricate oil pump seals with Mopar Door-Ease, or Ru-Glyde, Door Eze, or ATF Plus.

(11) Install oil pump (Fig. 158). Align and position pump on pilot studs. Slide pump down studs and work it into front clutch hub and case by hand. Then install two or three pump bolts to hold pump in place.

(12) Remove pilot stud tools and install remaining oil pump bolts. Tighten bolts alternately in diagonal pattern to 20 N·m (15 ft-lbs).

CHECKING INPUT SHAFT END PLAY

(1) Measure input shaft end play (Fig. 159).

(2) Attach dial indicator to converter housing. Position indicator plunger against input shaft and zero indicator.

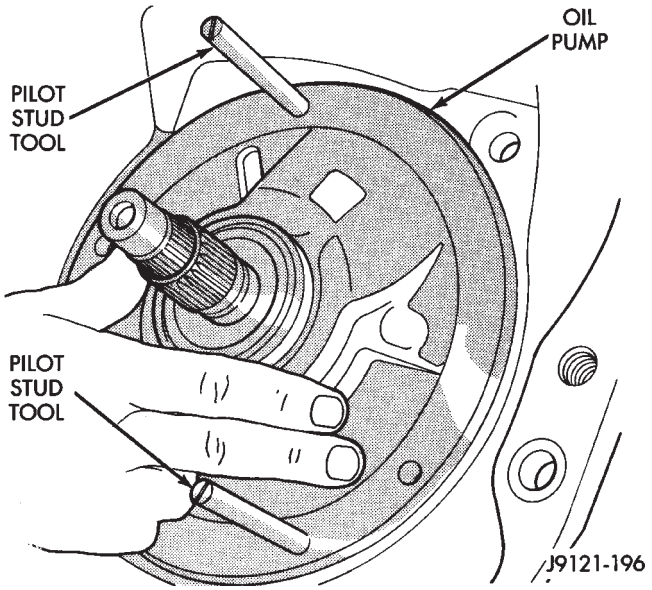

Fig. 158 Installing Oil Pump And Reaction Shaft Support

(3) Move input shaft in and out and record reading. End play should be 0.56 - 2.31 mm (0.022 - 0.091 in.).

(4) If end play is incorrect, transmission is incorrectly assembled, or output shaft thrust washer and/or thrust plate are worn and need to be changed.

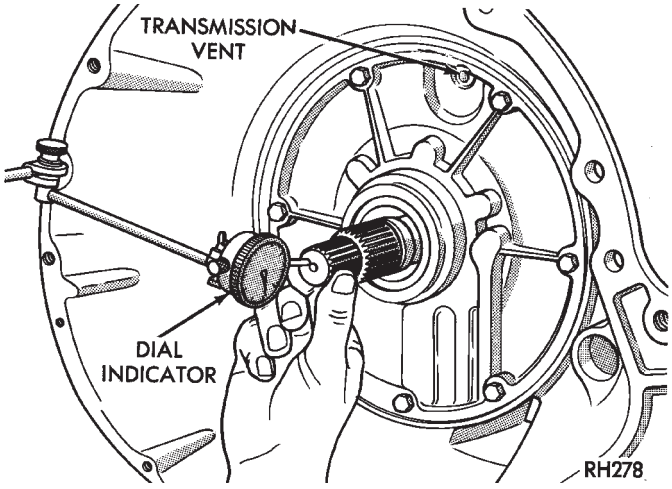

Fig. 159 Checking Input Shaft End Play

VALVE BODY INSTALLATION

(1) Install new manual lever shaft seal in case. Use 15/16 deep well socket to install seal.

(2) Make sure neutral switch has **not** been installed in case. Remove switch if necessary as it will interfere with valve body installation.

(3) Install new seal rings on accumulator piston (Fig. 160). Lubricate accumulator piston, seals and accumulator bore with transmission fluid.

(4) Install accumulator piston and spring (Fig. 160) in case.

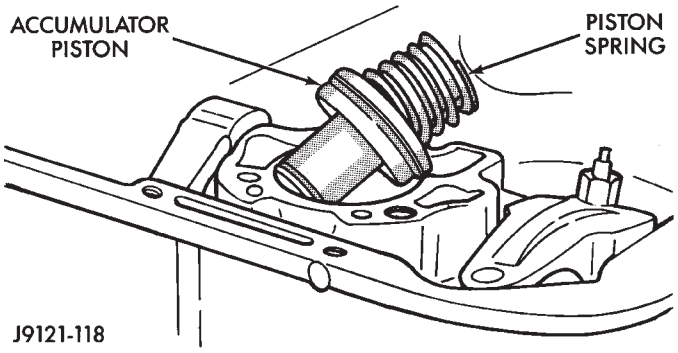

Fig. 160 Installing Accumulator Piston And Spring

(5) Place valve body manual lever in low to move park lock rod rearward.

(6) Position valve body on case. Work park rod past sprag and install valve body-to-case bolts finger tight.

(7) Install park/neutral position switch in case. Tighten switch to 34 N·m (25 ft. lbs.) torque.

(8) Align valve body on case (Fig. 161).

(9) Install and tighten valve body-to-case bolts alternately and evenly to 12 N·m (105 in. lbs.) torque. Start at center and work outward when tightening bolts. **Do not overtighten valve body bolts. This could result in distortion and cross leakage after installation.**.

(10) Connect converter clutch solenoid wire to case connector (Fig. 161).

(11) Install new filter on valve body (Fig. 162). Tighten filter screws to 4 N·m (35 in. lbs.).

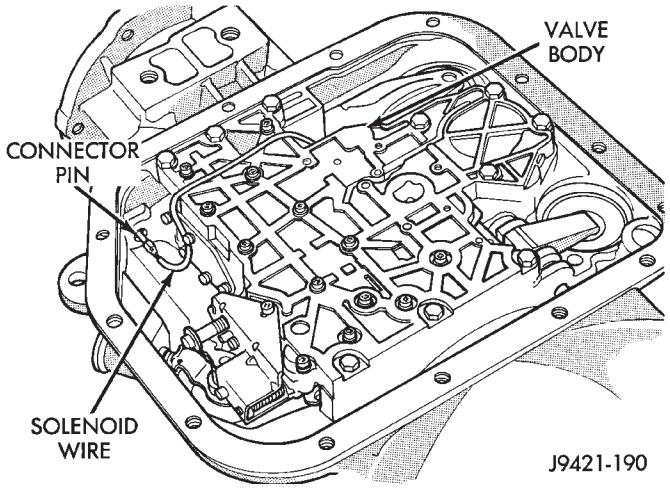

Fig. 161 Valve Body Installation

BAND ADJUSTMENT AND OIL PAN INSTALLATION

(1) Adjust **front band** as follows:

(a) Loosen locknut.

(b) Tighten adjusting screw to 72 in. lbs. torque.

(c) Back off front band adjusting screw as follows:

• On 30RH (2.5L), back adjusting screw off 2 1/2 turns

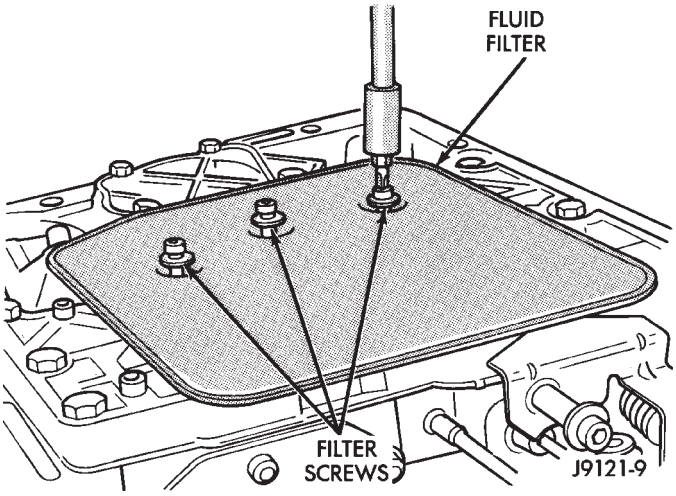

Fig. 162 Fluid Filter Installation

• **On 32RH (4.0L), back adjusting screw off 2 1/4 turns**

(d) Hold adjusting screw in position and tighten locknut to 34 N·m (25 ft. lbs.).

(2) Adjust **rear band** as follows:

(a) Loosen locknut.

(b) Tighten adjusting screw as follows:

• On 32RH, tighten screw to 8 N·m (72 in. lbs) torque

• On 30RH, tighten screw to 5 N·m (41 in. lbs.) torque.

(c) Back off rear band adjusting screw as follows:

• On 30RH (2.5L), back adjusting screw off 7 turns

• On 32RH (4.0L), back adjusting screw off 4 turns

(d) Hold adjusting screw in place and tighten locknut to 34 N·m (25 ft. lbs.) torque.

(3) Install new pan gasket on transmission and install oil pan. Tighten pan bolts to 17 N·m (13 ft. lbs.).

(4) Turn transmission over.

EXTENSION HOUSING, CONTROL LEVER AND CONVERTER INSTALLATION

(1) Install throttle valve and manual valve levers on shaft.

(2) Position new extension adapter housing gasket on transmission case. Use petroleum jelly to hold gasket in place.

(3) Install new rear seal in extension housing if required.

(4) Install extension/adapter housing on transmission case. Tighten housing fasteners to 33 N·m (24 ft. lbs.). Be sure park lock rod is properly engaged in sprag before tightening fasteners.

(5) Lubricate converter hub with transmission fluid and carefully install converter. Turn converter back and forth until seated.

(6) Secure converter in oil pump before mounting transmission on jack and before moving transmission back under vehicle. Use metal strapping, C-clamp, or locking pliers to hold converter in place. Attach holding tool to converter housing.

CAUTION: The transmission cooler and lines must be reverse flushed if overhaul corrected a malfunction that generated sludge, metal particles, or clutch friction material. The torque converter and drainback valve should also be replaced as they will also be contaminated. Debris and residue NOT flushed from the cooler and lines will flow back into the transmission and converter. The result will be a repeat failure and shop comeback.

AW-4 AUTOMATIC TRANSMISSION

CONTENTS

	page		page
AW-4 AUTOMATIC TRANSMISSION	**165**	**AW-4 TRANSMISSION REMOVAL AND INSTALLATION**	**198**
AW-4 IN-VEHICLE SERVICE	**182**	**GENERAL INFORMATION**	**165**
AW-4 TRANSMISSION DIAGNOSIS	**176**		
AW-4 TRANSMISSION OVERHAUL	**201**		

GENERAL INFORMATION

INDEX

	page		page
Components and Operation	166	Hydraulic System	169
Description	165	Recommended Fluid and Capacity	166
First/Second/Third/Reverse Components	168	Torque Converter	167
Fourth Gear Overdrive Components	167	Transmission Identification	166
Geartrain Operation and Application Charts	169	Transmission Ranges and Shift Lever Positions	166

DESCRIPTION

AW-4 Transmission Overhaul

The AW-4 is a 4-speed, electronically controlled automatic transmission (Fig. 1). The AW-4 is used in XJ models with a 4.0L engine.

Running gear consists of an oil pump, planetary gear sets, clutch and brake units, hydraulic accumulators, a valve body with electrical solenoids and a transmission control module (TCM). Cables are used for shift and throttle pressure control. A park/neutral position switch permits engine starting in Park and Neutral range only.

The valve body solenoids are controlled by signals from the transmission control module (TCM). Signal sequence is determined by vehicle speed and throttle position.

Fourth gear is an 0.75:1 ratio overdrive range. First, second, third and reverse gear are conventional

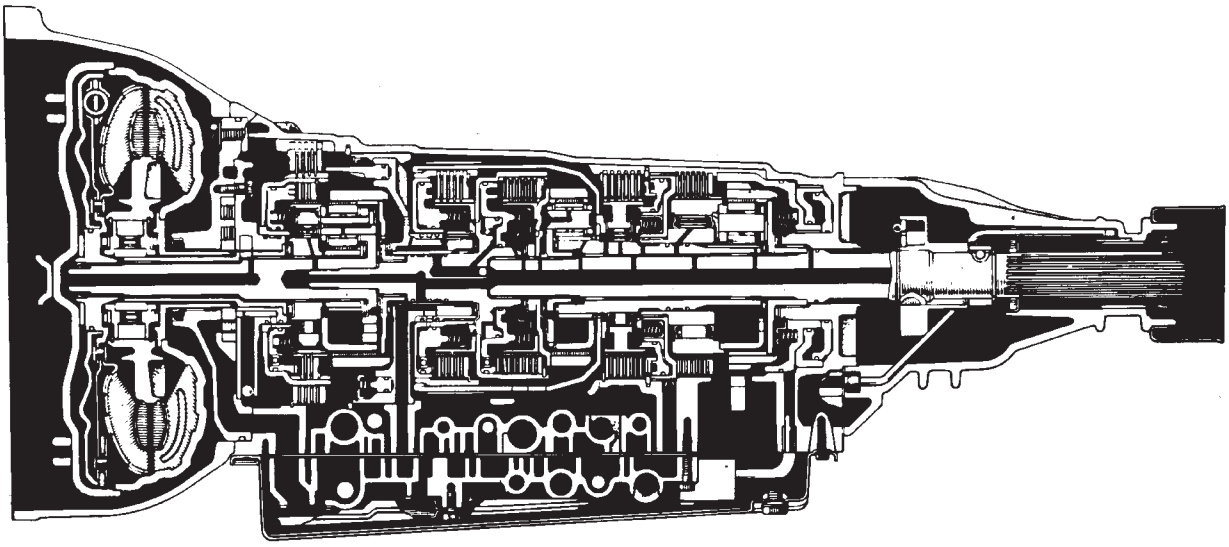

J8921-398

Fig. 1 AW-4 Automatic Transmission

ranges. Third gear ratio is 1:1. A separate planetary gear set provides overdrive operation in fourth gear.

TRANSMISSION RANGES AND SHIFT LEVER POSITIONS

The AW-4 transmission has six ranges and shift lever positions. Park, Reverse and Neutral are conventional and mechanically operated. The 1-2, 3 and D ranges provide electronically controlled shifting.

The 1-2 position provides first and second gear only. The 3 position provides first, second and third gear.

The D range provides first through fourth gear. Overdrive fourth gear range is available only when the shift lever is in D position (Fig. 2).

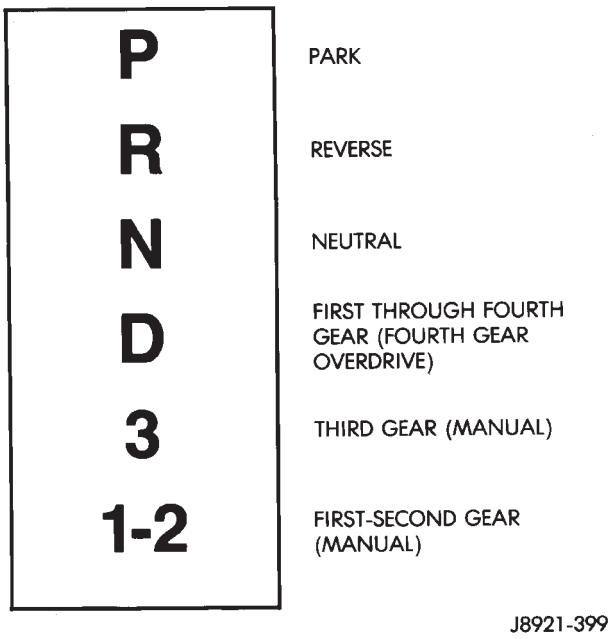

Fig. 2 AW-4 Shift Lever Positions And Transmission Ranges

TRANSMISSION IDENTIFICATION

The transmission I.D. plate is attached to the case (Fig. 3). The plate contains the transmission serial and model numbers. Refer to the information on this plate when ordering service parts.

RECOMMENDED FLUID AND CAPACITY

Recommended and preferred fluid for the AW-4 transmission is Mopar Dexron IIE/Mercon.

Mopar Dexron II can be used but only in emergency situations where Mercon fluid is not available.

Approximate refill capacity for the AW-4 is 8.0 liters (16.9 pints or 8.45 quarts).

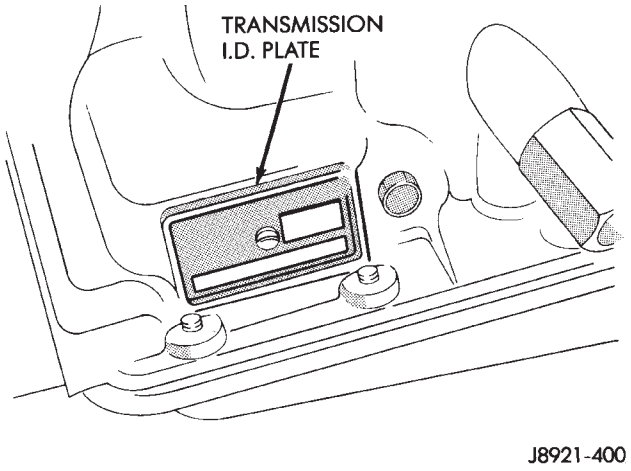

Fig. 3 Transmission Identification

COMPONENTS AND OPERATION

ELECTRONIC CONTROLS

The AW-4 is electronically controlled in 1, 2, 3 and D ranges. Controls consist of the transmission control module (TCM), valve body solenoids and various sensors. The sensors monitor vehicle speed, throttle opening, shift lever position and brake pedal application.

TRANSMISSION CONTROL MODULE (TCM)

The module determines shift and converter clutch engagement timing based on signals from sensors. The valve body solenoids are activated, or deactivated accordingly.

The TCM has a self diagnostic program. Component and circuitry malfunctions can be diagnosed with the DRB scan tool. Once a malfunction is noted and stored in control module memory, it is retained even after the problem has been corrected. To cancel a stored malfunction, disconnect and reconnect the ″Trans.″ fuse in the module harness.

TRANSMISSION VALVE BODY SOLENOIDS

The solenoids are mounted on the valve body and operated by the TCM. The solenoids control operation of the converter clutch and shift valves in response to input signals from the module.

SENSORS

Sensors include:

- throttle position sensor (TPS)
- transmission speed sensor
- vehicle speed sensor
- park/neutral position switch
- brake switch

The throttle position sensor is mounted on the throttle body. It electronically determines throttle position and relays this information to the transmission control module to determine shift points and converter clutch engagement.

The transmission speed sensor consists of a rotor and magnet on the transmission output shaft and a switch in the extension housing or adapter. The sensor switch is activated each time the rotor and magnet complete one revolution. Sensor signals are sent to the transmission control module.

The park/neutral position switch is mounted on the valve body manual shaft. The switch signals shift linkage and manual valve position to the transmission control module through an interconnecting harness. The switch prevents engine starting in all gears other than Park or Neutral.

The brake switch is in circuit with the torque converter clutch solenoid. The switch disengages the converter clutch whenever the brakes are applied. The switch is mounted on the brake pedal bracket and signals the transmission control module when the pedal is pressed or released.

TORQUE CONVERTER

A three element torque converter is used for all applications. The converter contains an impeller, stator, and turbine.

The AW-4 converters are all equipped with a converter clutch mechanism. The clutch consists of a sliding clutch piston, clutch springs and the clutch disc material (Fig. 4). The clutch provides optimum torque transfer and economy when engaged.

The clutch disc is attached to the converter front cover. The clutch piston and clutch springs are attached to the turbine hub. The springs dampen engine firing impulses and loads during the initial phase of converter clutch engagement.

Clutch engagement is controlled by transmission valve body solenoid number three and by the converter clutch relay valve. The solenoid channels line pressure to the clutch through the relay valve at clutch engagement speeds.

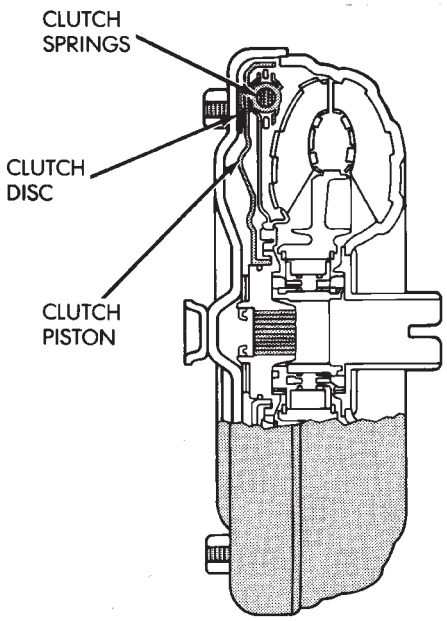

Fig. 4 Torque Converter (With Clutch)

Torque converter clutch engagement occurs in second gear in 1-2 position; third gear in 3 position and third and fourth gear in D position.

FOURTH GEAR OVERDRIVE COMPONENTS

The overdrive system consists of the input shaft, one-way clutch, planetary sun gear, ring gear, planetary carrier, clutch and overdrive brake (Fig. 5). The overdrive elements are controlled and applied through transmission valve body solenoid number two.

In overdrive fourth gear, the brake prevents the overdrive sun gear from turning. During operation, the overdrive elements operate as follows:

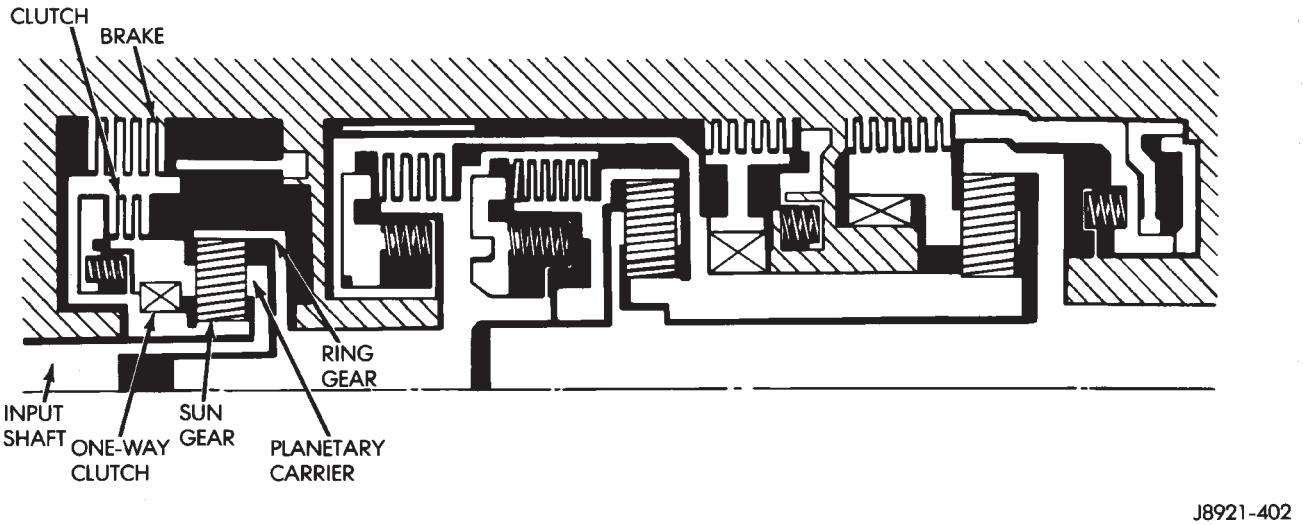

Fig. 5 Fourth Gear Overdrive Components

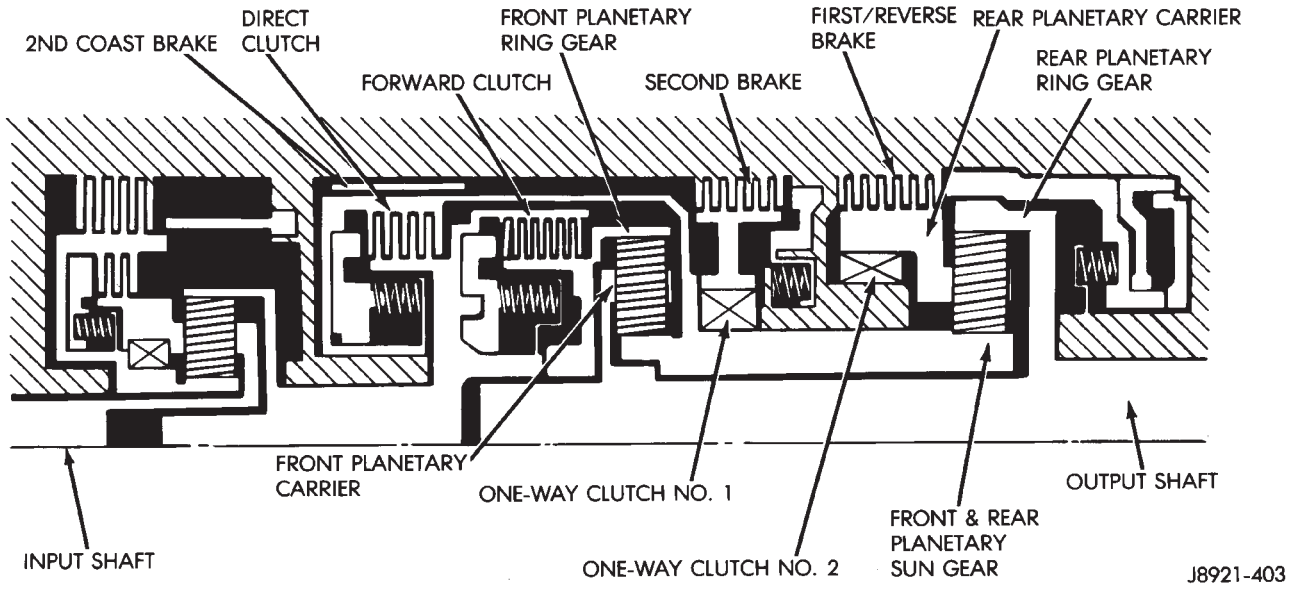

Fig. 6 First, Second, Third And Reverse Gear Components

The overdrive input shaft and planetary carrier rotate as a unit. The sun gear and overdrive direct clutch drum are in mesh and operate as a single unit. The direct clutch splines function as the hub for the overdrive brake. The one-way clutch outer race is in mesh with the planetary carrier. The inner race is fixed to the sun gear shaft.

FIRST/SECOND/THIRD/REVERSE COMPONENTS

First, third and reverse gear components are outlined in Figure 6.

The input shaft is meshed with the direct clutch hub and the forward clutch drum. These elements rotate as a unit. The forward clutch hub rotates as a unit with the front planetary ring gear. The direct clutch drum is meshed with the forward end of the planetary sun gear.

The second brake hub serves as the outer race of one-way clutch No. 1. The clutch inner race is locked with the front/rear sun gear. The inner race of one-way clutch No. 2 is splined to the transmission case and is locked. The outer race rotates as a unit with the rear planetary carrier.

NOMENCLATURE	FUNCTION
Overdrive Direct Clutch	Connects overdrive sun gear and overdrive carrier
Overdrive Brake	Prevents overdrive sun gear from turning either clockwise or counterclockwise
Overdrive One-Way Clutch	When transmission is driven by engine, connects overdrive sun gear and overdrive carrier
Forward Clutch	Connects input shaft and front ring gear
Direct Clutch	Connects input shaft and front and rear sun gear
Second Coast Brake	Prevents front and rear sun gear from turning either clockwise or counterclockwise
Second Brake	Prevents outer race of No. 1 one-way clutch from turning either clockwise or counterclockwise, thus preventing front and rear sun gear from turning counterclockwise
First/Reverse Brake	Prevents rear planetary carrier from turning either clockwise or counterclockwise
One-Way Clutch No. 1	When second brake is operating, prevents front and rear sun gear from turning counterclockwise
One-Way Clutch No. 2	Prevents rear planetary carrier from turning counterclockwise

J8921-404

Fig. 7 Component Function Chart

Shift Lever Position	Gear	Valve Body Solenoid No. 1	Valve Body Solenoid No. 2	OVERDRIVE CLUTCH	FORWARD CLUTCH	DIRECT CLUTCH	OVERDRIVE BRAKE	SECOND COAST BRAKE	SECOND BRAKE	FIRST/ REVERSE BRAKE	OVERDRIVE ONE-WAY CLUTCH	NO.1 ONE-WAY CLUTCH	NO.2 ONE-WAY CLUTCH
P	Park	ON	OFF	•									
R	Reverse	ON	OFF	•		•				•	•		
N	Neutral	ON	OFF	•									
D	First	ON	OFF	•	•						•		•
	Second	ON	ON	•	•				•		•	•	
	Third	OFF	ON	•	•	•			•		•		
	OD	OFF	OFF		•	•	•		•				
3	First	ON	OFF	•	•						•		•
	Second	ON	ON	•	•			•	•		•	•	
	Third	OFF	ON	•	•	•			•		•		
1-2	First	ON	OFF	•	•					•	•		•
	Second	ON	ON	•	•			•	•		•	•	

• = Applied J8921-405

Fig. 8 Component Application Chart

The rear planetary ring gear is splined to the output shaft. The front planetary carrier and rear carrier ring gear are meshed and rotate as a unit with the output shaft.

GEARTRAIN OPERATION AND APPLICATION CHARTS

Operation and application of the first through fourth and reverse gear elements are outlined in the function and application charts.

The Component Function Chart (Fig. 7) describes basic function of various geartrain elements. The Component Application Chart (Fig. 8) indicates which elements (including valve body solenoids), are applied in the various gear ranges.

HYDRAULIC SYSTEM

The hydraulic system consists of the pump, valve body and solenoids, and four hydraulic accumulators. The oil pump provides lubrication and operating pressure.

The valve body controls application of the clutches, brakes, second coast band, and the converter clutch. The valve body solenoids control sequencing of the 1-2, 2-3 and 3-4 shift valves. The solenoids are activated by signals from the transmission control module.

The accumulators are used in the clutch and brake feed circuits to control initial apply pressure. Spring loaded accumulator pistons modulate the initial surge of apply pressure for smooth engagement.

OIL PUMP

A gear-type oil pump is used. The pump gears are mounted in the pump body. The pump drive gear is operated by the torque converter hub. Drive tangs on the hub engage in drive slots in the drive gear.

TRANSMISSION VALVE BODY COMPONENTS

Transmission operating pressure is supplied to the clutch and brake apply circuits through the transmission valve body. The valve body consists of an upper body, lower body, separator plate and upper and lower gaskets (Fig. 9). The various spool valves, sleeves, plugs and springs are located within the two body sections.

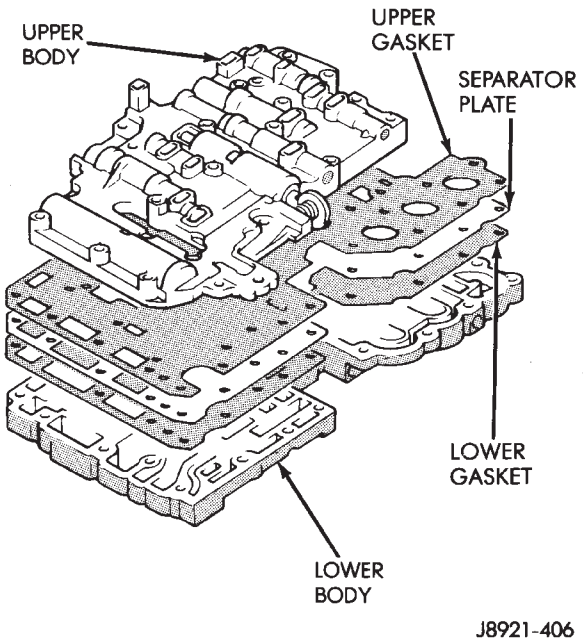

Fig. 9 Two-Section Transmission Valve Body

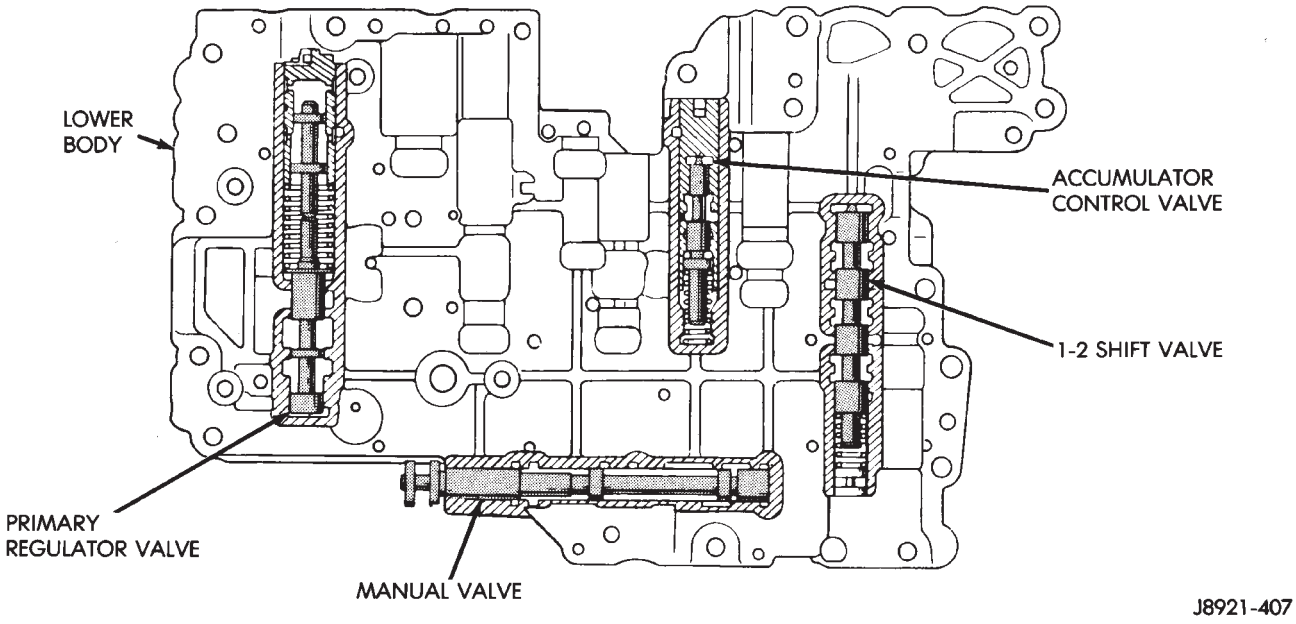

Fig. 10 Upper Body Components

The manual valve, 1-2 shift valve, primary regulator valve, accumulator control valve, check balls, solenoids and oil strainers are located in the lower body section (Fig. 10). The remaining control and shift valves plus check balls and one additional oil strainer are located in the upper body section (Fig. 11).

Manual Valve

The manual valve is operated by the gearshift linkage. The valve diverts fluid to the apply circuits according to shift lever position.

Primary Regulator Valve

The primary regulator valve (Fig. 13) modulates line pressure to the clutches and brakes according to engine load. The valve is actuated by throttle valve pressure.

During high load operation, the valve increases line pressure to maintain positive clutch and brake engagement. At light load, the valve decreases line pressure just enough to maintain smooth engagement.

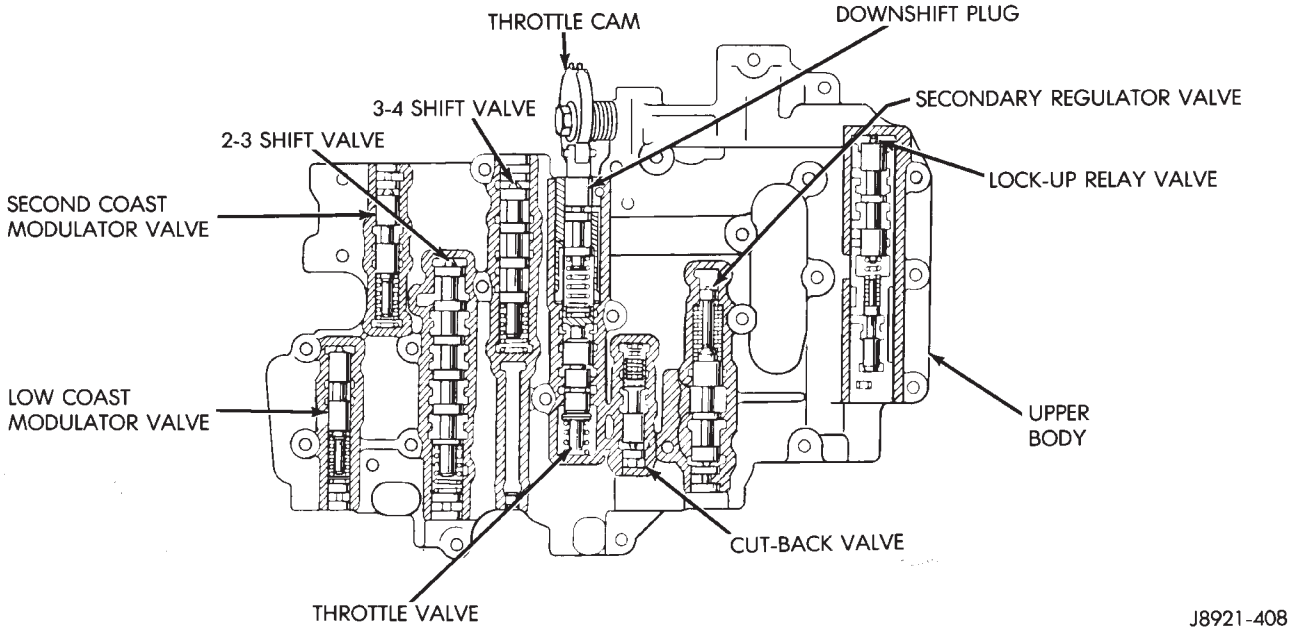

Fig. 11 Lower Body Components

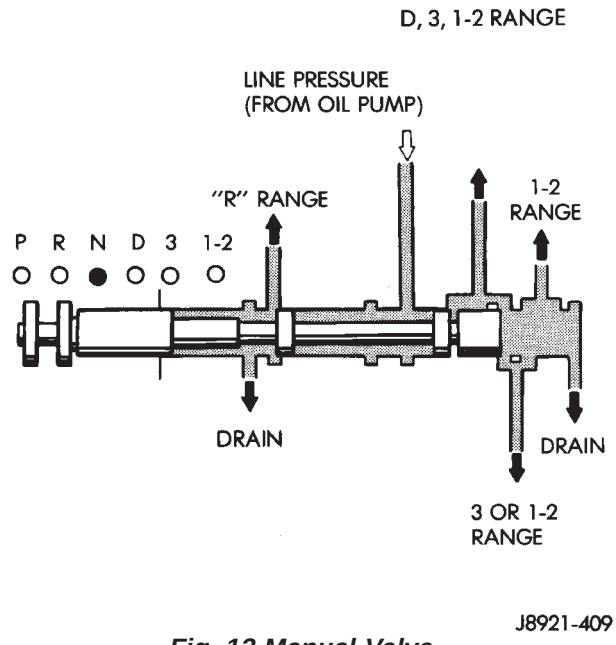

Fig. 12 Manual Valve

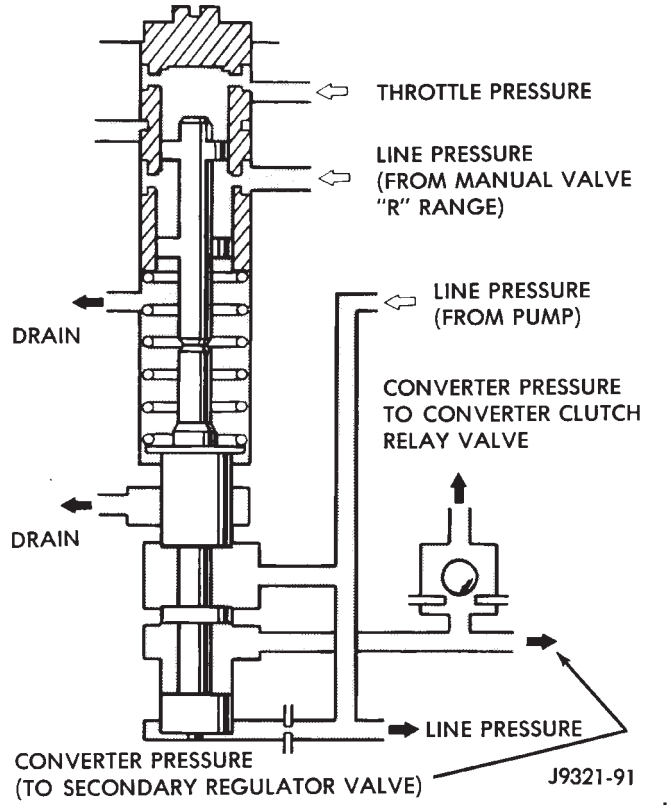

Fig. 13 Primary Regulator Valve

Throttle Valve and Downshift Plug

The throttle valve and downshift plug (Fig. 14) control throttle pressure to the primary regulator valve.

The downshift plug and throttle valve are operated by the throttle valve cam and throttle cable in response to engine throttle position. Throttle valve pressure is also modulated by the cut-back valve in second, third and fourth gear ranges.

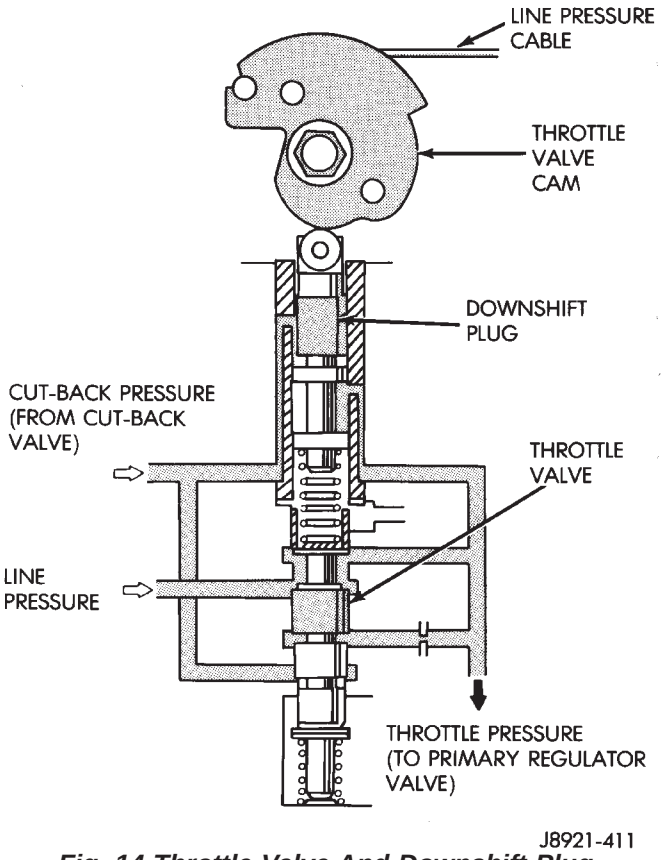

Fig. 14 Throttle Valve And Downshift Plug

Cut-Back Valve

The cut-back valve (Fig. 15) helps prevent excessive pump pressure buildup in second, third and fourth gear. The valve is actuated by throttle pressure and by line pressure from the second brake. The valve also helps regulate line pressure by controlling the amount of cut-back pressure to the throttle valve.

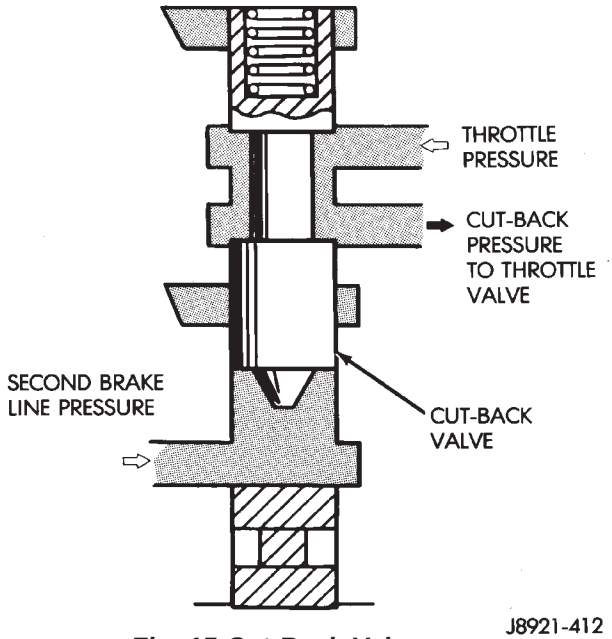

Fig. 15 Cut-Back Valve

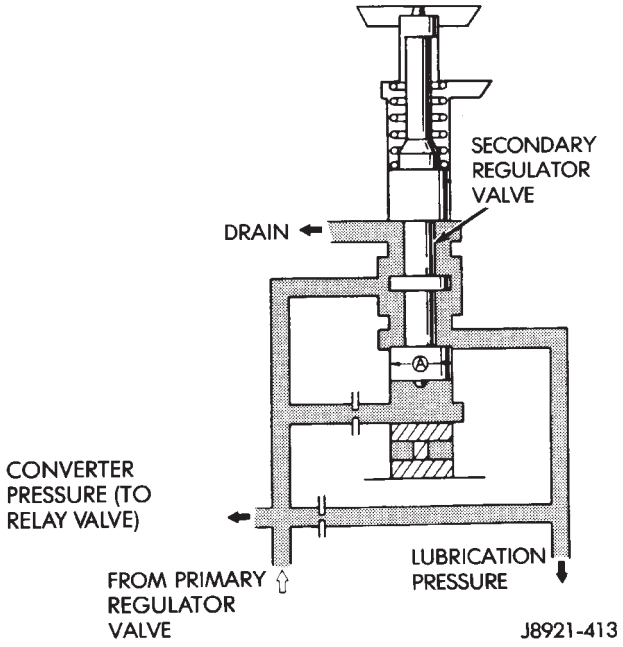

Fig. 16 Secondary Regulator Valve

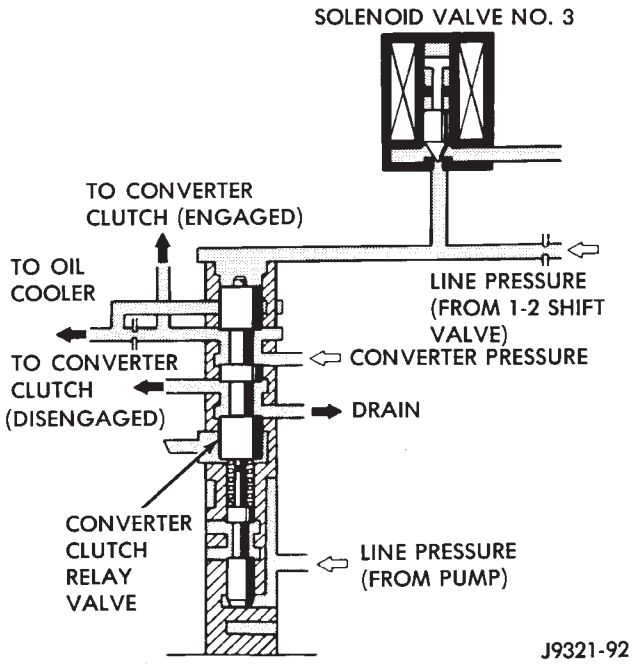

Fig. 17 Converter Clutch Relay Valve

Secondary Regulator Valve

The secondary regulator valve (Fig. 16) regulates converter clutch and transmission lubrication pressure. When primary regulator valve pressure exceeds requirements for clutch engagement or transmission lubrication, the secondary regulator valve is moved upward exposing the drain port. Excess pressure then bleeds off as needed. As pressure drops, spring tension moves the valve downward closing the drain port.

Converter Clutch Relay Valve

The relay valve (Fig. 17) controls fluid flow to the converter clutch. The valve is operated by line pressure from the 1-2 shift valve and is controlled by solenoid valve number three.

1-2 Shift Valve

The 1-2 shift valve (Fig. 18) controls 1-2 upshifts and downshifts. The valve is operated by the No. 2 valve body solenoid and line pressure from the manual valve, second coast modulator valve and the 2-3 shift valve.

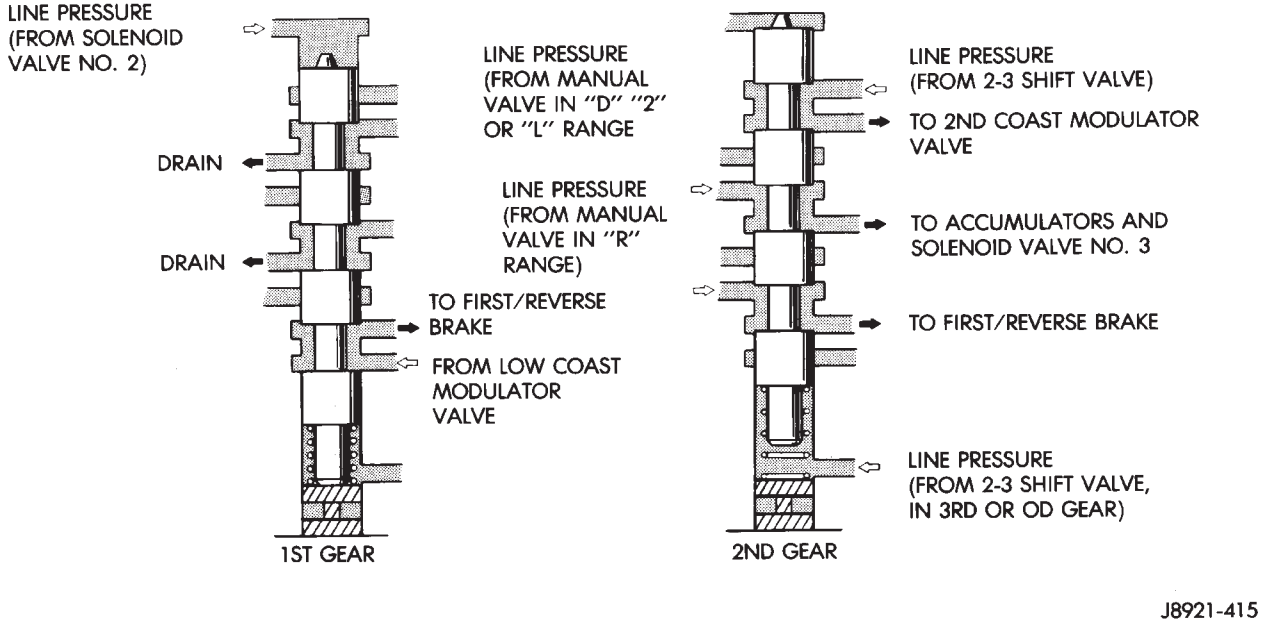

Fig. 18 1-2 Shift Valve

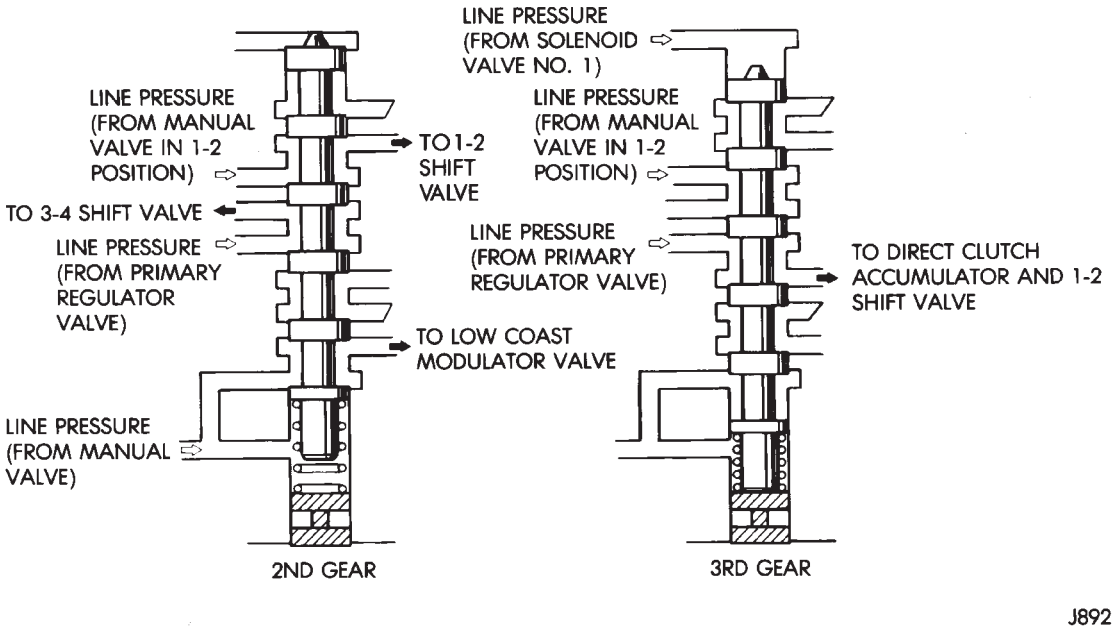

Fig. 19 2-3 Shift Valve

When the transmission control module deactivates the solenoid, line pressure at the top of the valve moves the valve down closing the second brake accumulator feed port. As the solenoid is activated and the drain port opens, spring force moves the valve up exposing the second brake feed port for the shift to second gear.

2-3 Shift Valve

The 2-3 shift valve (Fig. 19) controls 2-3 upshifts and downshifts. The valve is actuated by the No. 1 valve body solenoid and by line pressure from the manual valve and primary regulator valve.

When the TCM activates solenoid No. 1, line pressure at the top of the 2-3 valve is released through the solenoid drain port. Spring tension moves the valve up to hold the valve in second gear position. As the solenoid is deactivated, line pressure then moves the valve down exposing the direct clutch feed port for the shift to third gear.

3-4 Shift Valve

The 3-4 shift valve (Fig. 20) is operated by the No. 2 solenoid and by line pressure from the manual valve, 2-3 valve and primary regulator valve.

Energizing the No. 2 solenoid causes line pressure

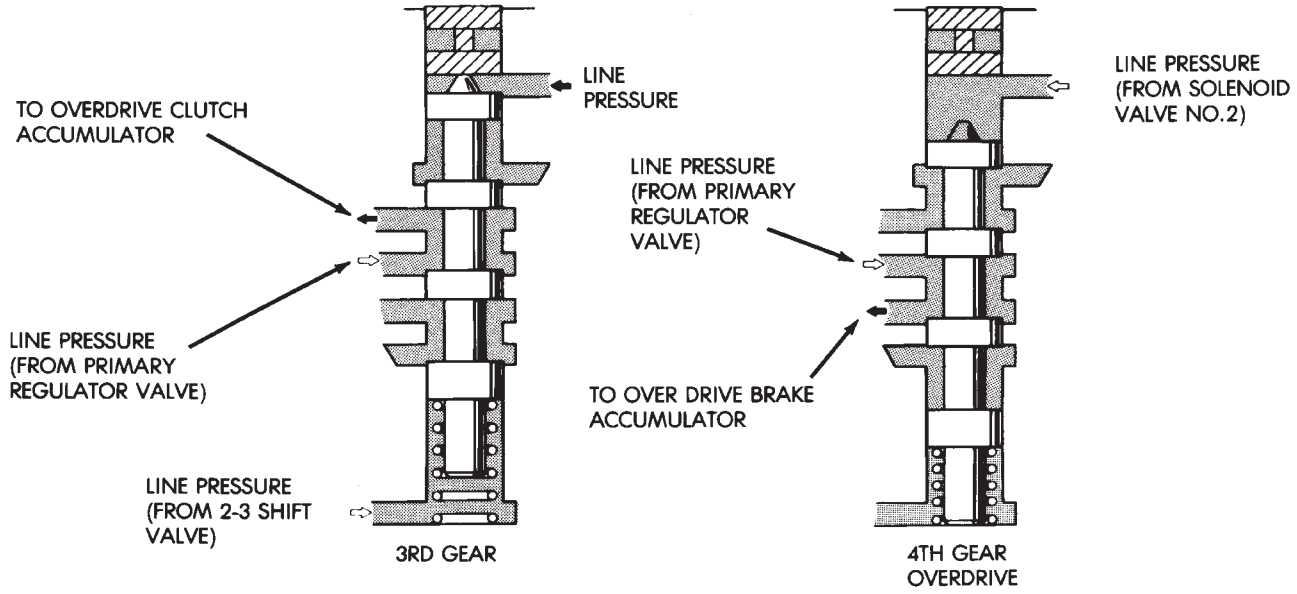

Fig. 20 3-4 Shift Valve

at the top of the 3-4 valve to be released through the solenoid valve drain port. Spring tension moves the valve up exposing the overdrive clutch accumulator feed port to apply the clutch.

De-energizing the solenoid causes the drain port to close. Line pressure then moves the valve down exposing the overdrive brake accumulator feed port for the shift to fourth gear.

In the 1-2 or 3 gearshift lever positions, line pressure from the 2-3 shift valve is applied to the lower end of the 3-4 valve. This holds the valve upward, closing off the overdrive brake feed port preventing a shift into fourth gear.

Second Coast Modulator Valve

The second coast modulator valve (Fig. 21) momentarily reduces line pressure from the 1-2 shift valve. This cushions application of the second coast brake. The valve is operative when the shift lever and manual valve are in the 3 position.

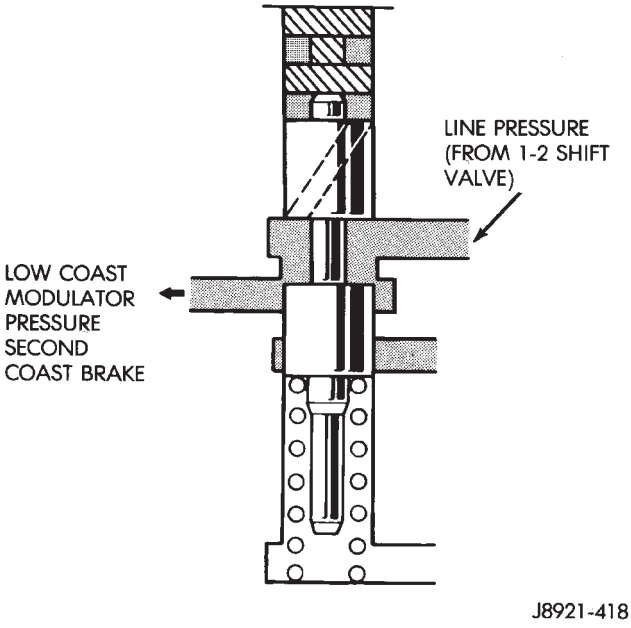

Fig. 21 Second Coast Modulator Valve

Low Coast Modulator Valve

The low coast modulator valve (Fig. 22) momentarily reduces line pressure from the 2-3 shift valve; this action cushions application of the first/reverse brake. The modulator valve operates when the shift lever and manual valve are in the 1-2 position.

Accumulator Control Valve

The accumulator control valve (Fig. 23) cushions clutch and brake application. This is achieved by reducing back pressure to the accumulators when throttle opening is small. The valve is operated by line and throttle pressure.

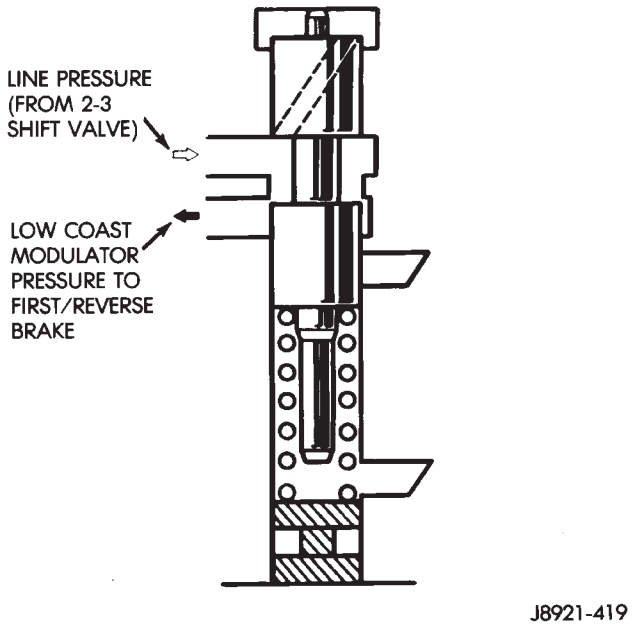

Fig. 22 Low Coast Modulator Valve

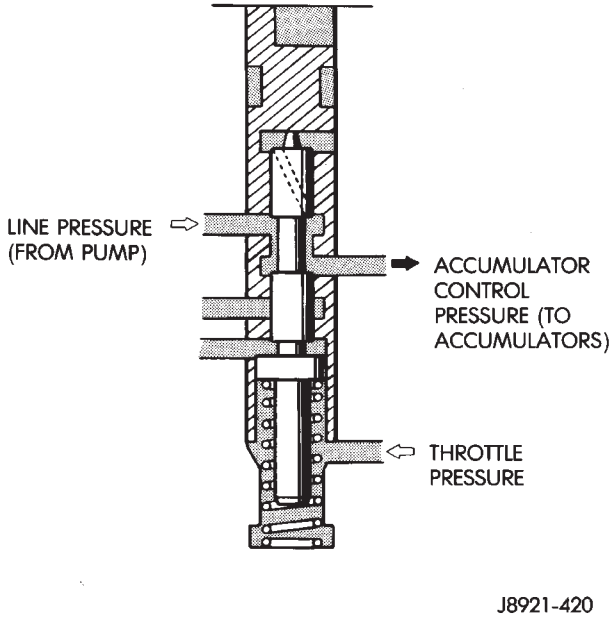

Fig. 23 Accumulator Control Valve

Accumulators

Four accumulators are used to cushion clutch and brake application. The accumulators (Fig. 24), consist of spring loaded pistons. The pistons dampen the initial surge of apply pressure to provide smooth engagement during shifts.

Control pressure from the accumulator control valve is continuously applied to the back pressure side of the accumulator pistons. This pressure plus spring tension holds the pistons down. As line pressure from the shift valves enters the opposite end of the piston bore, control pressure and spring tension momentarily delay application of full line pressure to

cushion engagement. The accumulators are all located in the transmission case (Fig. 24).

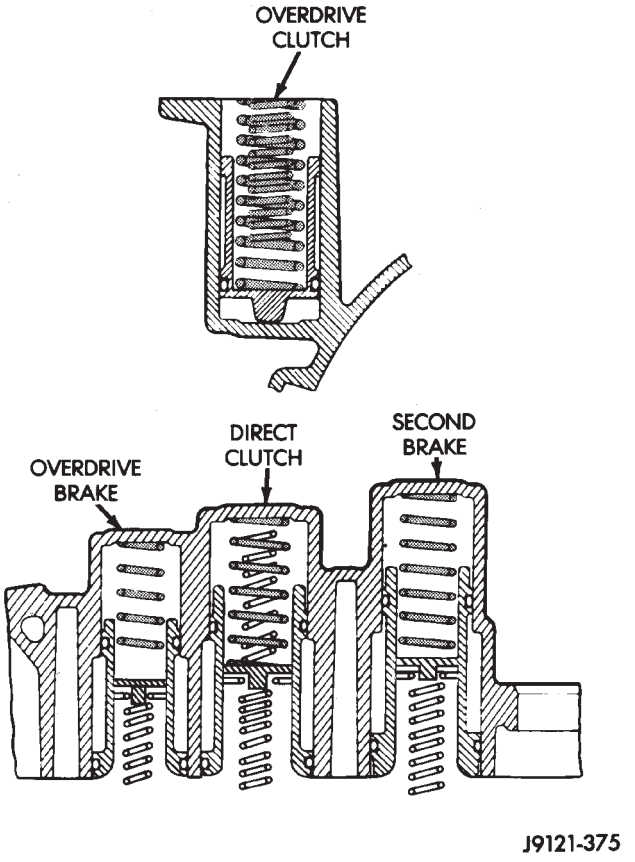

Fig. 24 Accumulators

Transmission Valve Body Solenoids

Three solenoids are used (Fig. 25). The No. 1 and 2 solenoids control shift valve operation by applying or releasing line pressure. The signal to apply or release pressure is provided by the transmission control module.

The No. 3 solenoid controls operation of the torque converter clutch. The solenoid operates in response to signals from the transmission control module.

When the No. 1 and 2 solenoids are activated, the solenoid plunger is moved off its seat opening the drain port to release line pressure. When either solenoid is deactivated, the plunger closes the drain port.

The No. 3 solenoid operates in reverse. When the solenoid is deactivated, the solenoid plunger is moved off its seat opening the drain port to release line pressure. When the solenoid is activated, the plunger closes the drain port.

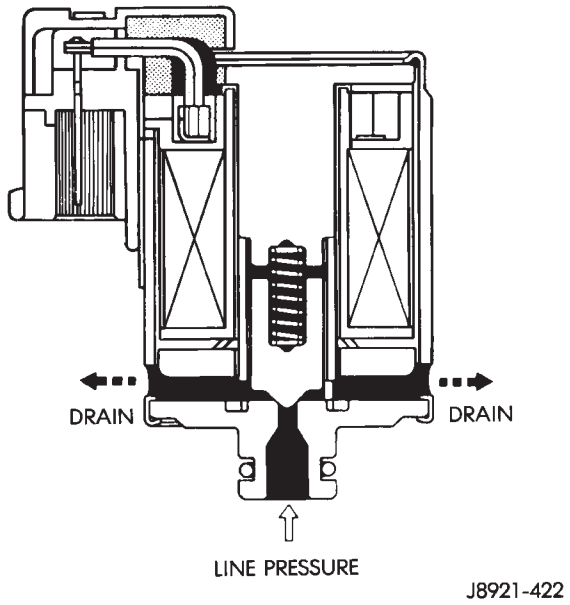

Fig. 25 Transmission Valve Body Solenoids

AW-4 TRANSMISSION DIAGNOSIS

INDEX

	page		page
General Diagnosis Information	176	Preliminary Inspection and Adjustment	176
Hydraulic Pressure Test	177	Time Lag Test	178
Manual Shifting Test	177	Torque Converter Stall Test	178

GENERAL DIAGNOSIS INFORMATION

Shift points are controlled by the transmission control module (TCM). Before attempting repair, determine if a malfunction is electrical or mechanical.

The TCM used with the AW-4 transmission has a self-diagnostic program compatible with the DRB scan tool. The tester will identify faults in the electrical control system.

Diagnosis should begin with the Preliminary Inspection And Adjustment procedure. It is will help determine if a problem is mechanical or electrical. The first procedure step is Initial Inspection and Adjustment.

PRELIMINARY INSPECTION AND ADJUSTMENT

(1) Check and adjust transmission shift cable if necessary.

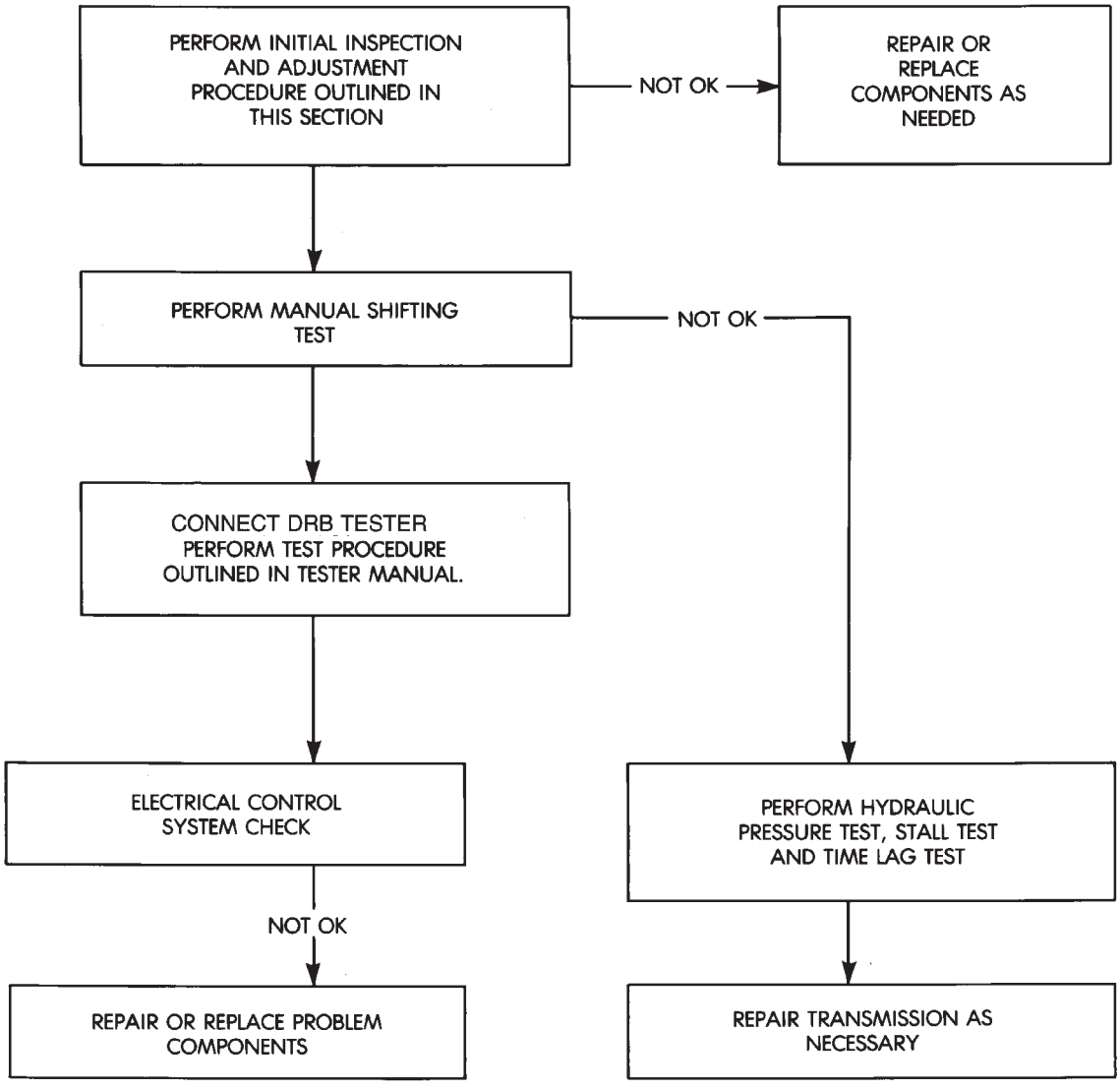

Fig. 26 Preliminary Diagnosis Check Procedure

(2) Verify transmission throttle cable operation. Repair or replace cable if necessary.

(3) Check engine throttle operation. Operate accelerator pedal and observe injector throttle plate movement. Adjust linkage if throttle plate does not reach wide open position.

(4) Check transmission fluid level when fluid is at normal operating temperature. Start engine. Shift transmission through all gear ranges then back to Neutral. Correct level is to Full or Add mark on dipstick with engine at curb idle speed.

(5) Check and adjust park/neutral position switch if necessary.

(6) Check throttle position sensor adjustment and operation. Adjust the sensor if necessary.

MANUAL SHIFTING TEST

(1) This test determines if problem is related to mechanical or electrical component.

(2) Stop engine and disconnect transmission control module or module fuse.

(3) Road test vehicle. Shift transmission into each gear range. Transmission should operate as follows:

- lock in Park
- back up in Reverse
- not move in Neutral
- provide first gear only with shift lever in 1-2 position
- operate in third gear only with shift lever in 3 position
- operate in overdrive fourth gear in D position

(4) If transmission operates as described, proceed to next step. However, if forward gear ranges were difficult to distinguish (all feel the same), or vehicle would not back up, refer to diagnosis charts. Do not perform stall or time lag tests.

CAUTION: Do not overspeed the engine during the next test step. Ease off the throttle and allow the vehicle to slow before downshifting.

(5) Continue road test. Manually downshift transmission from D to 3, and from 3 to 1-2 position. Then manually upshift transmission through forward ranges again.

(6) If transmission operation is OK, perform stall, time lag and pressure tests. If transmission shifting problem is encountered, refer to diagnosis charts.

(7) If a problem still exists, continue testing with DRB scan tool.

HYDRAULIC PRESSURE TEST

PRESSURE TEST PROCEDURE

(1) Connect pressure test gauge to test port on passenger side of transmission. Use Adapter 7554 to connect gauge. Be sure test gauge has minimum capacity of 300 psi (2100 kPa).

(2) Be sure transmission fluid is at normal operating temperature.

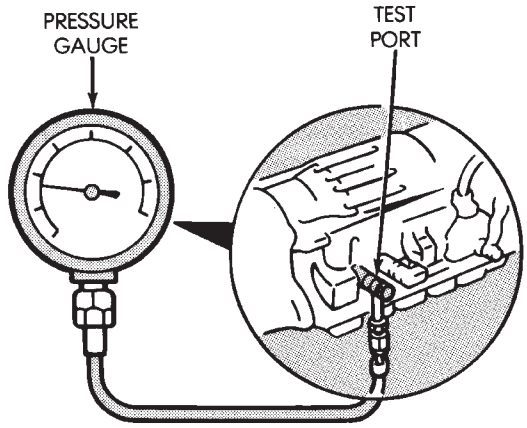

Fig. 27 Pressure Test Gauge Connection

(3) Apply parking brakes and block wheels.

WARNING: DO NOT ALLOW ANYONE TO STAND AT THE FRONT OR REAR OF THE VEHICLE WHILE PERFORMING THE FOLLOWING STEPS IN THE PRESSURE TEST.

(4) Check and adjust engine curb idle speed.

(5) Apply (and hold) service brakes.

(6) Shift transmission into D range and note line pressure with engine at curb idle speed. Pressure should be 61-to-70 psi (421-to-481 kPa).

(7) Press accelerator pedal to wide open throttle position and note line pressure. Pressure should be 173-to-209 psi (1196-to-1442 kPa).

CAUTION: Do not hold wide open throttle for more than 3-4 seconds at a time.

(8) Shift transmission into Reverse and note line pressure with engine at curb idle speed. Pressure should be 75-to-90 psi (519-to-618 kPa).

(9) Press accelerator to wide open throttle position and note line pressure in Reverse. Pressure should be 213-to-263 psi (1471-to-1814 kPa).

CAUTION: Do not hold wide open throttle for more than 4 seconds.

(10) If line pressure is not within specifications, adjust transmission throttle cable and repeat pressure test.

PRESSURE TEST ANALYSIS

If pressures in D and Reverse are higher than specified in test, check for the following:

- throttle cable loose, worn, binding or out of adjustment
- throttle valve, downshift plug, throttle cam, or primary regulator valve are sticking, worn or damaged

If pressures in D and Reverse are lower than specified in test, check for following:

- throttle cable loose, worn, binding or out of adjustment
- throttle valve, downshift plug, or throttle cam sticking, worn or damaged
- primary regulator valve sticking, worn, or damaged
- oil pump gears or housing worn, or damaged
- overdrive clutch worn, or damaged

If pressures are low in D range only, check for following:

- forward clutch worn or damaged
- fluid leakage in D range circuit (component seal and O-rings)

If pressures are low in Reverse only, check for following:

- shift cable and manual valve out of adjustment
- fluid leakage in reverse circuit (component seal and O-rings)
- direct clutch worn or damaged
- first/reverse brake worn or damaged

TORQUE CONVERTER STALL TEST

Stall testing checks the holding ability of the transmission clutches and brakes and of the torque converter stator overrunning clutch. **Stall speeds are checked in both Drive and Reverse ranges with the AW-4 transmission.**

(1) Before starting test, be sure fluid level is correct and fluid is at normal operating temperature.

(2) Connect tachometer to engine. Position tachometer so it can be viewed from drivers seat.

(3) Apply parking brakes and block wheels.

(4) Apply and hold service brakes.

(5) Shift transfer case into 2H position.

(6) Start engine.

WARNING: DO NOT ALLOW ANYONE TO STAND AT THE FRONT OR REAR OF THE VEHICLE DURING THE TEST.

(7) Shift transmission into D range.

(8) Open throttle completely and record maximum engine rpm registered on tachometer. It takes anywhere from 4 to 10 seconds to reach maximum rpm. However, once maximum rpm has been achieved, **do not hold wide open throttle for more than 3-4 seconds.**

CAUTION: Stalling the converter causes a rapid increase in fluid temperature. To avoid fluid overheating, hold wide open throttle for no more than 4 seconds after reaching peak rpm. In addition, if more than one stall test is required, run the engine at 1000 rpm with the transmission in Neutral for at least 20 seconds to cool the fluid.

(9) Stall speed should be in 2100-2400 rpm range in Drive.

(10) Release throttle, shift transmission into Neutral, and run engine for 20-30 seconds to cool fluid.

(11) Shift transmission into Reverse.

(12) Repeat stall test described in step (8).

(13) Stall speed in Reverse should also be in 2100-2400 rpm range.

(14) Release accelerator pedal, shift transmission into Neutral, and run engine for 20-30 seconds to cool fluid.

STALL SPEED TEST ANALYSIS

If engine rpm is lower than specified in D and Reverse, check for the following:

- engine output/performance insufficient
- stator overrunning clutch in torque converter not holding if engine speed was 1500 rpm or less.

If stall speed in D range is higher than specified, check for the following:

- line pressure low
- forward clutch slipping
- No. 2 one-way clutch not holding
- overdrive one-way clutch not holding

If stall speed in Reverse was higher than specified, check for the following:

- line pressure low
- direct clutch slipping
- first/ reverse brake slipping
- overdrive one-way clutch not holding

If stall speeds were higher than specified in both D and Reverse, check for the following:

- low fluid level
- line pressure low
- overdrive one-way clutch not holding

TIME LAG TEST

This test checks general condition of the overdrive clutch, forward clutch, rear clutch and first/reverse brake. Condition is indicated by the amount of time required for clutch/brake engagement with the engine at curb idle speed. Engagement time is measured for D and Reverse positions. A stop watch is recommended for test accuracy.

TEST PROCEDURE

(1) Check and adjust transmission fluid level if necessary.

(2) Bring transmission to normal operating temperature.

(3) Apply parking brakes and turn off air conditioning unit.

(4) Shift transfer case into 2H range.

(5) Start engine and check curb idle speed. Adjust speed if necessary. Curb idle must be correct to ensure accurate test results.

(6) Shift transmission into Neutral and set stop watch.

(7) During following test steps, start stop watch as soon as shift lever reaches D and Reverse ranges.

(8) Shift transmission into D range and record time it takes for engagement. Repeat test two more times.

(9) Reset stop watch and shift transmission back to Neutral.

(10) Shift transmission into Reverse and record time it takes for engagement. Repeat test two more times.

(11) Engagement time in D range should be a maximum of 1.2 seconds. Engagement time for Reverse should be a maximum of 1.5 seconds.

TIME LAG TEST ANALYSIS

If engagement time is longer than specified for D range, check for the following:

- shift cable misadjusted
- line pressure low
- forward clutch worn
- overdrive clutch worn or damaged

If engagement time is longer than specified for Reverse, check for the following:

- shift cable misadjusted
- line pressure low
- direct clutch worn
- first/reverse brake worn
- overdrive clutch worn or damaged

SERVICE DIAGNOSIS

CONDITION	POSSIBLE CAUSE	CORRECTION
VEHICLE WILL NOT BACK UP OR MOVE FORWARD	Shift cable out of adjustment or damaged Valve body or primary regulator faulty Park lock pawl faulty Torque converter faulty Converter drive plate broken Oil pump intake screen blocked Transmission faulty	Adjust cable or replace cable Inspect/repair valve body Repair park pawl Replace torque converter Replace drive plate Clean screen Disassemble and repair transmission
SHIFT LEVER POSITION INCORRECT	Shift cable out of adjustment Manual valve and lever faulty	Adjust cable Repair valve body
HARSH ENGAGEMENT	Throttle cable out of adjustment Valve body or primary regulator faulty Accumulator pistons faulty Transmission faulty	Adjust throttle cable Repair valve body Repair pistons Disassemble and repair transmission
DELAYED 1-2, 2-3 OR 3-4 UP-SHIFT, OR DOWN-SHIFTS FROM 4-3 OR 3-2 AND SHIFTS BACK TO 4 OR 3	Electronic control problem Valve body faulty Solenoid faulty	Locate problem with DRB Tester Repair valve body Repair solenoid
SLIPS ON 1-2, 2-3 OR 3-4 UP-SHIFT, OR SLIPS OR SHUDDERS DURING ACCELERATION	Shift cable out of adjustment Throttle cable out of adjustment Valve body faulty Solenoid faulty Transmission faulty	Adjust cable Adjust cable Repair valve body Replace solenoid Disassemble and repair transmission
DRAG OR BIND ON 1-2, 2-3 OR 3-4 UP-SHIFT	Shift cable out of adjustment Valve body faulty Transmission faulty	Adjust cable Repair valve body Disassemble and repair transmission
CONVERTER CLUTCH DOES NOT ENGAGE IN 2ND, 3RD OR 4TH	Electronic control problem Valve body faulty Solenoid faulty Transmission faulty	Check with DRB Tester Repair valve body Replace solenoid Disassemble and repair transmission
HARSH DOWN-SHIFT	Throttle cable out of adjustment Throttle cable and cam faulty Accumulator pistons faulty Valve body faulty Transmission faulty	Adjust cable Replace cable and cam Repair pistons Repair valve body Disassemble and repair transmission
NO DOWN-SHIFT WHEN COASTING	Valve body faulty Solenoid faulty Electronic control problem	Repair valve body Replace solenoid Locate problem with DRB Tester

J9321-93

SERVICE DIAGNOSIS

CONDITION	POSSIBLE CAUSE	CORRECTION
DOWN-SHIFT LATE OR EARLY DURING COAST	Throttle cable faulty	Replace cable
	Valve body faulty	Repair valve body
	Transmission faulty	Disassemble and repair transmission
	Solenoid faulty	Replace solenoid
	Electronic control problem	Locate problem with DRB Tester
NO 4-3, 3-2 OR 2-1 KICKDOWN	Solenoid faulty	Replace solenoid
	Electronic control problem	Locate problem with DRB Tester
	Valve body faulty	Repair valve body
NO ENGINE BRAKING IN 1-2 POSITION	Solenoid faulty	Replace solenoid
	Electronic control problem	Locate problem with DRB Tester
	Valve body faulty	Repair valve body
	Transmission faulty	Disassemble and repair transmission
VEHICLE DOES NOT HOLD IN PARK	Shift cable out of adjustment	Adjust cable
	Parking lock pawl cam and spring faulty	Replace cam and spring
OVERHEAT DURING NORMAL OPERATION (FLUID DISCOLORED, SMELLS BURNED)	Low fluid level	Add fluid and check for leaks
	Fluid cooler, lines blocked, or cooler cracked (oil in engine coolant)	Flush cooler and lines and replace radiator if transmission fluid has entered coolant
OVERHEAT DURING COMMERCIAL OPERATION OR WHILE TRAILER TOWING (FLUID DARK AND BURNED WITH SOME SLUDGE FORMATION)	Vehicle not properly equipped for trailer towing or commercial use	Be sure vehicle is equipped with recommended optional components (i.e., HD springs, transmission, axle, larger CID engine, auxiliary cooler, correct axle ratio, etc.). If vehicle is not so equipped, it should not be used for severe service operation
	Vehicle not equipped with auxiliary fluid cooler	Drain fluid, change filter, and install auxiliary cooler
	Extensive idling time or operation in heavy traffic in hot weather	Cut down on idling time; shift into neutral every so often and run engine at 1000 rpm to help circulate fluid through cooler
	Tow vehicle overloaded (exceeding vehicle tow capacity)	Be sure vehicle is properly equipped to handle load; do not tow Class III-type loads with a vehicle that is only rated for Class I or II operation
	Air flow to auxiliary cooler blocked by snow plow, front mounted spare tire, bug screen, or similar item	Remove or reposition item causing air flow blockage
OIL COMES OUT FILLER TUBE	Transmission overfilled	Drain fluid to correct level; remove neutral switch and drain through switch hole with suction gun
	Breather vent in oil pump blocked	Inspect and clear blockage
	Fluid cooler or cooler lines plugged	Flush cooler and lines

J9321-94

AW-4 IN-VEHICLE SERVICE

INDEX

	page
Accumulator Pistons and Springs	189
Adapter Housing Seal Replacement	191
Checking Fluid Level and Condition	182
Manual Valve Shaft Seal Replacement	187
Park Interlock Cable Adjustment	195
Park Rod and Pawl Service	190
Park/Neutral Position Switch	183
Refilling After Overhaul or Fluid/Filter Change	182
Second Coast Brake Servo	190
Shift Cable Adjustment	195
Speed Sensor	192
Speed Sensor Rotor—Speedometer Drive Gear	193
Throttle Position Sensor (TPS) Service	193
Transmission Control Module (TCM) Service	183
Transmission Cooler Line Fittings	197
Transmission Cooler Service	196
Transmission Throttle Cable Adjustment	194
Transmission Throttle Cable Replacement	193
Transmission Valve Body Installation	187
Transmission Valve Body Removal	186
Transmission Valve Body Solenoids	184

CHECKING FLUID LEVEL AND CONDITION

Recommended fluid for AW-4 transmissions is Mopar Dexron IIE/Mercon.

Mopar Dexron II can also be used but only when Mercon fluid is not available.

CHECKING FLUID LEVEL

(1) Be sure transmission fluid is at normal operating temperature. Normal operating temperature is reached after approximately 15 miles (25 km) of operation.

(2) Position vehicle on level surface. This is important for an accurate fluid level check.

(3) Shift transmission through all gear ranges and back to Park.

(4) Apply parking brakes.

(5) Verify that transmission is in Park.

(6) Wipe off dipstick handle to prevent dirt from entering fill tube. Then remove dipstick and check fluid level and condition.

(7) Correct fluid level is **to FULL mark on dipstick when fluid is at normal operating temperature** (Fig. 1).

(8) If fluid level is low, top off level with Mopar Dexron IIE/Mercon. Mopar Dexron II can be used but only if Mercon is not available. **Do not overfill transmission. Add only enough fluid to bring level to Full mark.**

(9) If too much fluid was added, excess amount can be removed with suction gun and appropriate diameter plastic tubing. Tubing only has to be long enough to extend into oil pan.

CHECKING FLUID CONDITION

Inspect the appearance of the fluid during the fluid level check. Fluid color should range from dark red to pink and be free of foreign material, or particles. If the fluid is dark brown or black in color and smells burnt, the fluid has been overheated and must be changed.

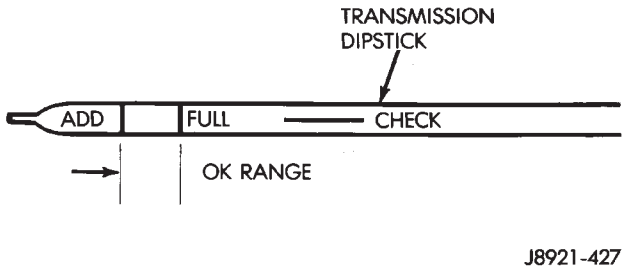

Fig. 1 Transmission Fluid Level

Transmission operation should also be checked if the fluid is severely discolored and contains quantities of foreign material, metal particles, or clutch disc friction material.

A small quantity of friction material or metal particles in the oil pan is normal. The particles are usually generated during the break-in period and indicate normal seating of the various transmission components.

REFILLING AFTER OVERHAUL OR FLUID/FILTER CHANGE

The best way to refill the transmission after a fluid change or overhaul is as follows:

(1) If transmission has been overhauled, install transmission in vehicle.

(2) Remove dipstick and insert clean funnel in transmission fill tube.

(3) Add following initial quantity of Mopar Dexron IIE/Mercon to transmission:

(a) If fluid/filter change was performed, add **4 pints (2 quarts)** of fluid to transmission.

(b) If transmission was completely overhauled and torque converter was replaced or drained, add **10 pints (5 quarts)** of fluid to transmission.

(c) Remove funnel and install dipstick.

(4) Operate vehicle until fluid reaches normal operating temperature.

(5) Apply parking brakes.

(6) Let engine run at normal curb idle speed, apply service brakes. Then shift transmission through all gear ranges and back to PARK (leave engine running).

(7) Remove dipstick and check fluid level. Add only enough fluid to bring level to Full mark on dipstick. Do not overfill. **If too much fluid is added, excess amount can be removed with suction gun and plastic tubing. Tubing only has to be long enough to extend into oil pan.**

(8) When fluid level is correct, shut engine off, release park brake, remove funnel, and reseat dipstick in fill tube.

TRANSMISSION CONTROL MODULE (TCM) SERVICE

Use the DRB scan tool to diagnose transmission control module function whenever a fault is suspected. Replace the module only when the scan tool indicates the module is actually faulty.

TRANSMISSION CONTROL MODULE REPLACEMENT

The transmission control module is mounted under the instrument panel. On left hand drive models, it is at the driver side of the lower finish panel (Fig. 2). On right hand drive models, it is at the passenger side of the lower finish panel (Fig. 3).

To remove the module, disconnect the wire harness, remove the mounting screws and remove the module from the finish panel. Tighten the module mounting screws securely after installation. Also be sure the wire harness is not twisted, kinked or touching any body panels.

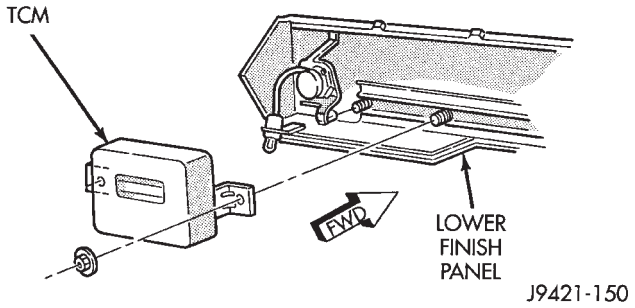

Fig. 2 TCM Location (Left Hand Drive)

PARK/NEUTRAL POSITION SWITCH

SWITCH TESTING

Test switch continuity with an ohmmeter. Disconnect the switch and check continuity at the connector terminal positions and in the gear ranges indicated in Figure 3. Switch continuity should be as follows:

- Continuity should exist between terminals B and C with the transmission in Park and Neutral only (Fig. 4).

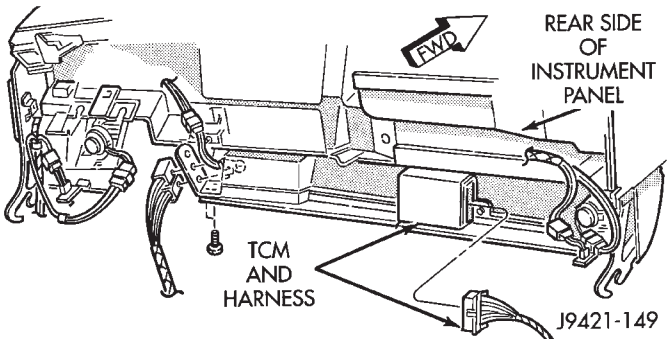

Fig. 3 TCM Location (Right Hand Drive)

- Continuity should exist between terminals A and E with the transmission in Reverse (Fig. 4).
- Continuity should exist between terminals A and G with the transmission in third gear (Fig. 4).
- Continuity should exist between terminals A and H with the transmission in first and/or second gear (Fig. 4).
- Continuity should not exist in D position.

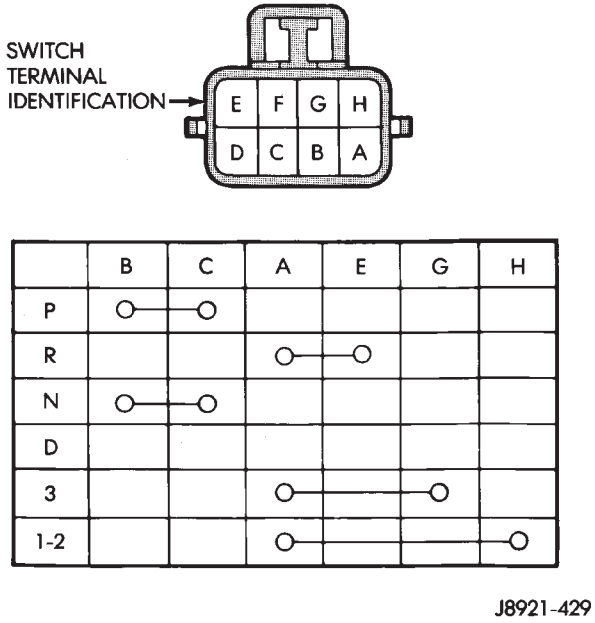

Fig. 4 Park/Neutral Position Switch Terminals And Testing

PARK/NEUTRAL POSITION SWITCH REMOVAL

(1) Raise vehicle.

(2) Disconnect switch wire harness connector.

(3) Pry washer lock tabs upward and remove switch attaching nut and tabbed washer (Fig. 5).

(4) Remove switch adjusting bolt (Fig. 5).

(5) Slide switch off manual valve shaft.

PARK/NEUTRAL POSITION SWITCH INSTALLATION AND ADJUSTMENT

(1) Disconnect shift linkage rod from shift lever on left side of transmission.

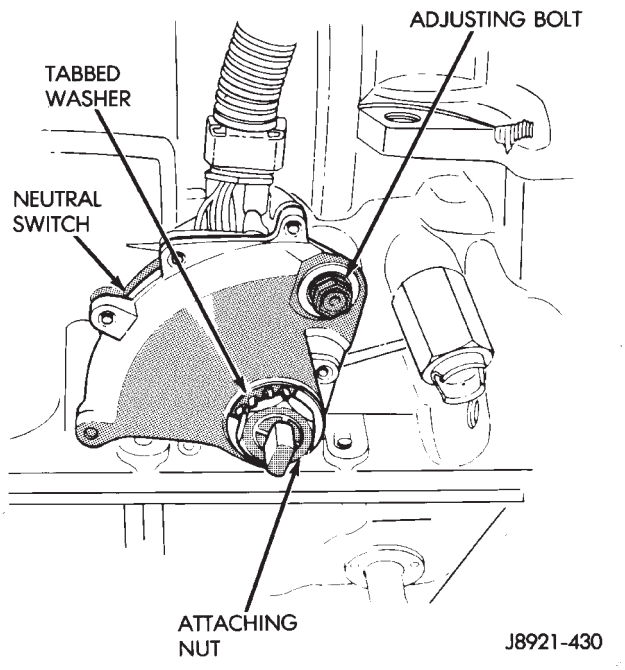

Fig. 5 Park/Neutral Position Switch Removal/ Installation

(2) Rotate manual shift lever all the way rearward. Then rotate lever forward two detent positions to Neutral.

(3) Install switch on manual valve shaft and install switch adjusting bolt finger tight. Do not tighten bolt at this time.

(4) Install tabbed washer on manual valve shaft and install switch attaching nut. Tighten nut to 6.9 N·m (61 in. lbs.) torque but do not bend washer lock tabs over nut at this time.

(5) Verify that transmission is in Neutral.

(6) Rotate switch to align neutral standard line with vertical groove on manual valve shaft (Fig. 6).

(7) Align switch standard line with groove or flat on manual valve shaft.

(8) Tighten switch adjusting bolt to 13 N·m (9 ft. lbs.) torque.

(9) Bend at least two washer lock tabs over switch attaching nut to secure it.

(10) Connect shift linkage rod to shift lever on left side of case.

(11) Connect switch wires to harness and lower vehicle.

(12) Check switch operation. Engine should start in Park and Neutral only.

TRANSMISSION VALVE BODY SOLENOIDS

SOLENOID REMOVAL

(1) Remove transmission oil pan drain plug and drain fluid.

(2) Remove pan bolts and remove oil pan.

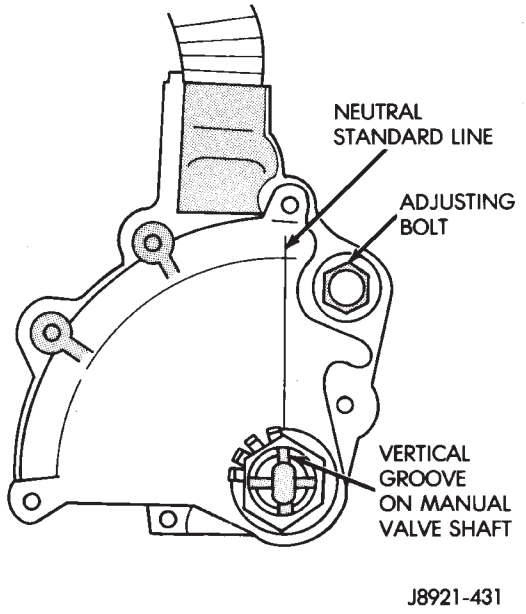

Fig. 6 Park/Neutral Position Switch Adjustment

(3) Remove oil screen bolts and remove screen (Fig. 7) and gasket. Discard the gasket.

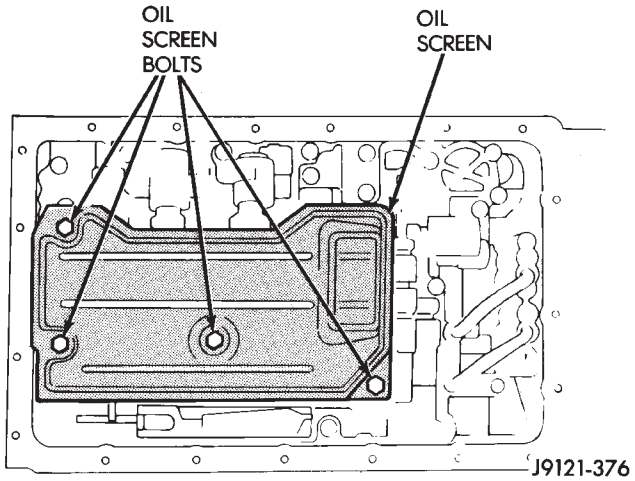

Fig. 7 Oil Screen Removal/Installation

(4) Disconnect solenoid wire connector (Fig. 8).

(5) If all solenoids are being removed, mark or tag wires for assembly reference before disconnecting them.

(6) Remove bolt attaching solenoids to valve body and remove solenoids (Fig. 9). Do not allow any valve body components to fall out when solenoids are removed.

(7) Clean oil filter and pan with solvent and dry with compressed air.

(8) Remove old sealer material from oil pan and transmission case.

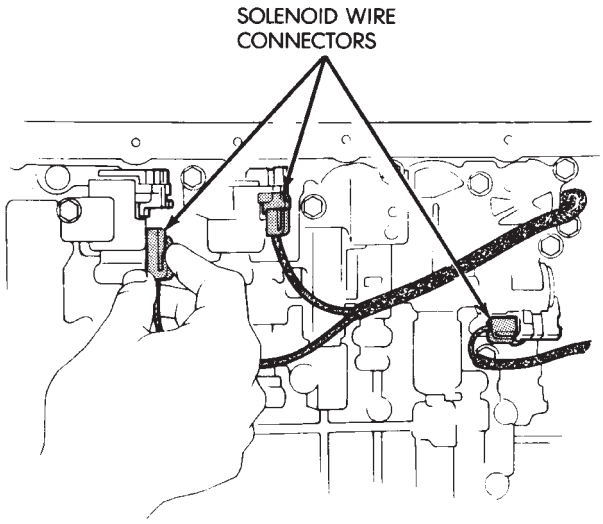

J8921-433

Fig. 8 Solenoid Wire Connectors

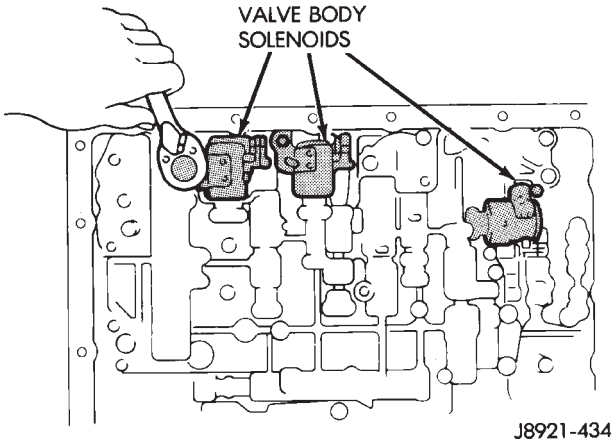

J8921-434

Fig. 9 Transmission Valve Body Solenoids

Solenoid Testing

Test solenoid resistance with an ohmmeter. Connect the ohmmeter leads to the solenoid mounting bracket and to the solenoid wire terminal (Fig. 10).

Solenoid resistance should be 11-15 ohms. Replace the solenoid if resistance is above or below the specified range.

SOLENOID INSTALLATION

(1) Position solenoids on valve body and install solenoid bolts. Tighten bolts to 10 N·m (7 ft. lbs.) torque.

(2) Connect feed wires to solenoids.

(3) Install new gaskets on oil screen and install screen. Tighten screen bolts to 10 N·m (7 ft. lbs.) torque.

(4) Apply bead of Loctite 599 sealer to oil pan sealing surface. Sealer bead should be at least 3.0 mm (1/8 in.) wide.

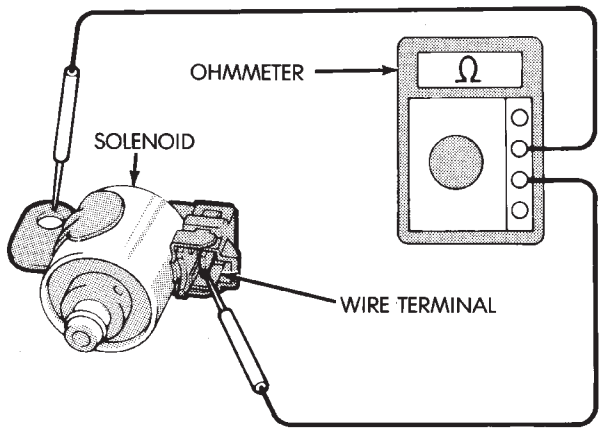

J8921-435

Fig. 10 Testing Transmission Valve Body Solenoid

(5) Install oil pan on transmission. Tighten pan bolts to 7 N·m (65 in. lbs.) torque.

(6) Install and tighten oil pan drain plug to 20 N·m (15 ft. lbs.) torque.

(7) Fill transmission with Mopar Dexron IIE/Mercon.

SOLENOID HARNESS ADAPTER SEAL REPLACEMENT

(1) Remove oil pan and oil screen. Refer to Solenoid Removal procedure.

(2) Disconnect solenoid wire connectors (Fig. 8).

(3) Remove bracket securing solenoid harness adaptor (Fig. 11) to case.

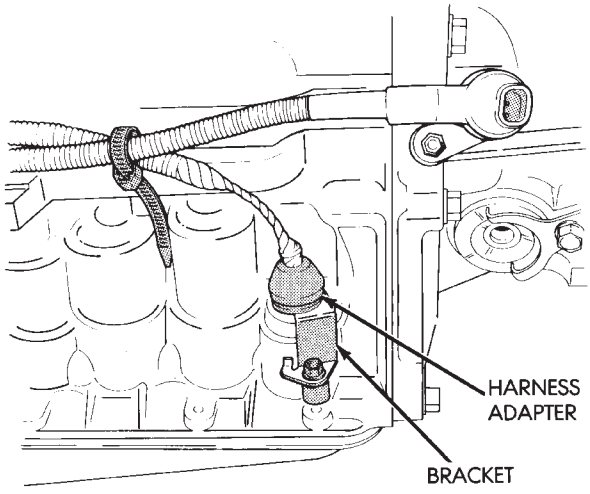

J8921-436

Fig. 11 Harness Adapter Removal/Installation

(4) Pull harness adapter and wires out of case.

(5) Remove and discard adapter O-ring.

(6) Lubricate new O-ring and install it on adapter.
(7) Install solenoid wire harness and adapter in case.
(8) Install adapter bracket and bracket bolt.
(9) Connect wires to solenoids.
(10) Install oil screen and oil pan.

TRANSMISSION VALVE BODY REMOVAL

Removal and installation are the only valve body service procedures covered in this section. Refer to the transmission overhaul section for valve body disassembly, cleaning, inspection and reassembly.

(1) Remove oil pan plug and drain transmission fluid.
(2) Remove oil pan and oil screen. Clean pan and screen in solvent and dry them with compressed air.
(3) Disconnect solenoid wire connectors (Fig. 8). Mark wires for assembly reference.
(4) Remove valve body oil tubes (Fig. 12). Carefully pry tubes out of valve body with screwdriver.

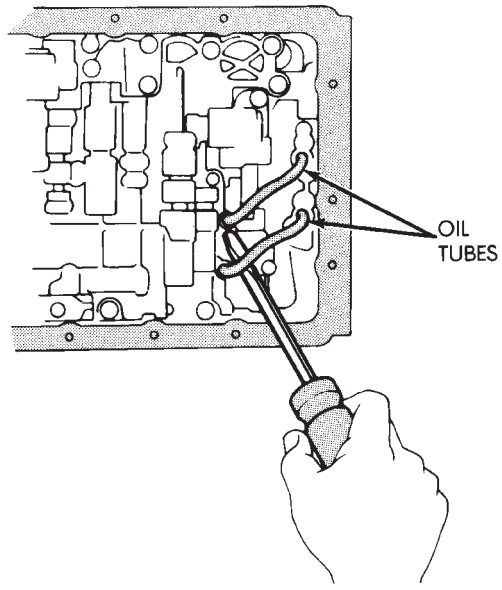

Fig. 12 Removing Transmission Valve Body Oil Tubes

(5) Disconnect throttle cable from throttle cam (Fig. 13).
(6) Remove valve body bolts. Bolt locations are outlined in Figure 14.
(7) Lower valve body and remove overdrive clutch accumulator springs, direct clutch accumulator springs and second brake accumulator spring (Fig. 15)
(8) Remove valve body and check ball and spring (Fig. 16).

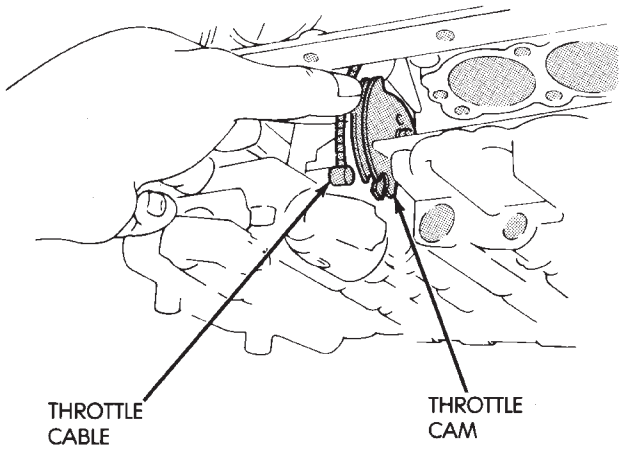

Fig. 13 Removing/Installing Throttle Cable

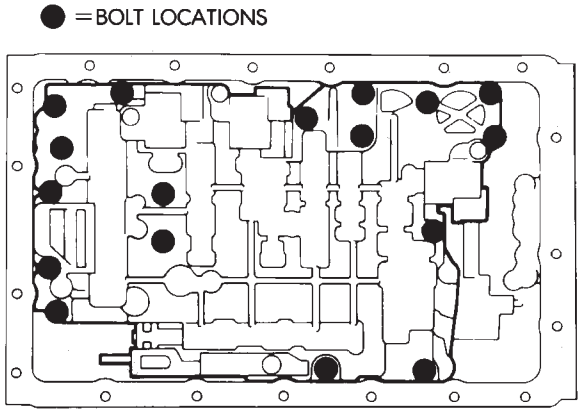

Fig. 14 Transmission Valve Body Bolt Locations

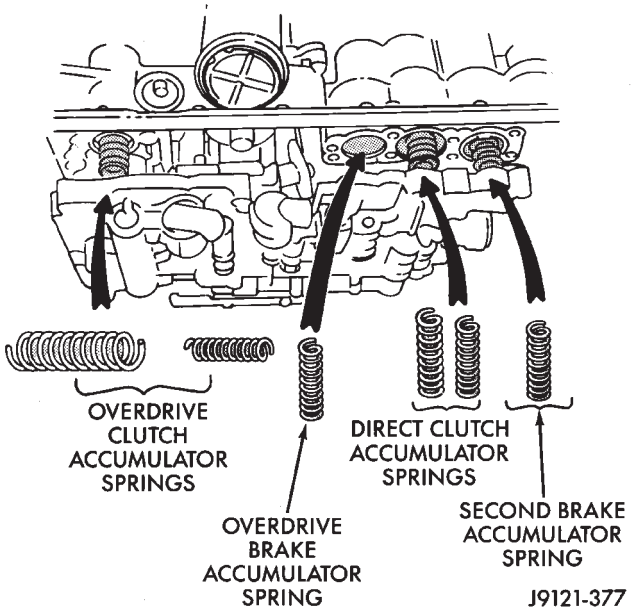

Fig. 15 Accumulator Springs

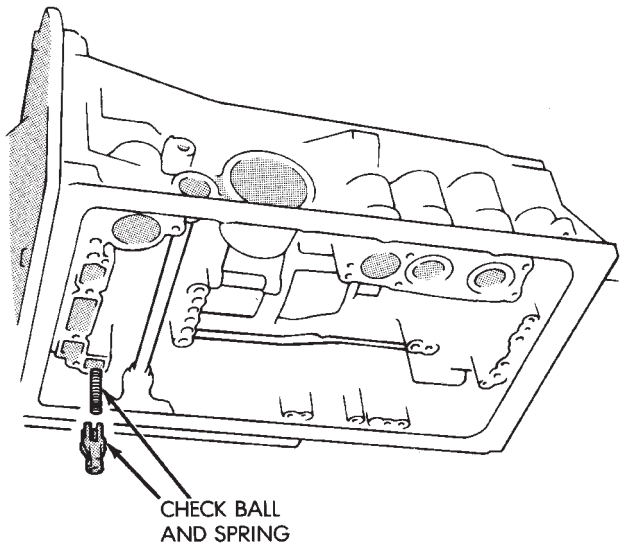

Fig. 16 Removing/Installing Check Ball And Spring

TRANSMISSION VALVE BODY INSTALLATION

(1) Connect cable to throttle cam (Fig. 13).

(2) Install check ball and spring (Fig. 16).

(3) Position accumulator springs and spacers on valve body.

(4) Align valve body manual valve with shift sector (Fig. 17) and carefully position valve body on case.

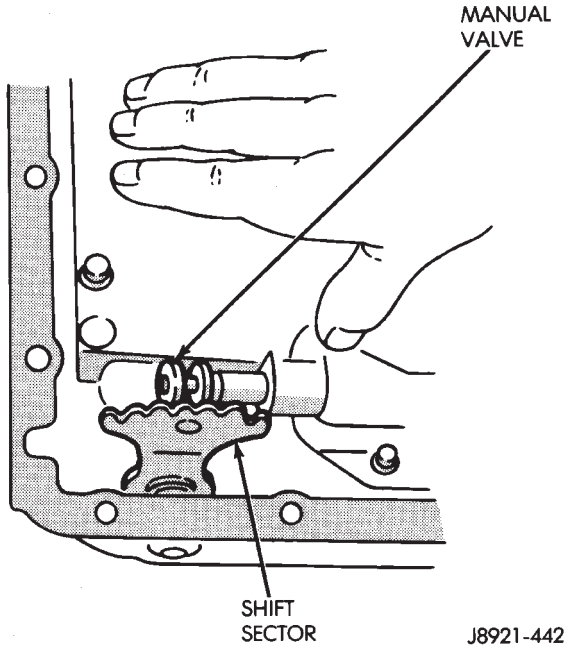

Fig. 17 Shift Sector And Manual Valve Alignment

(5) Install valve body bolts (Fig. 14). Tighten bolts evenly to 10 N·m (7 ft. lbs.) torque.

(6) Install valve body oil tubes. Be sure tube ends (L) and (M) are installed as shown in Figure 18.

(7) Remove old sealer material from oil pan and transmission case.

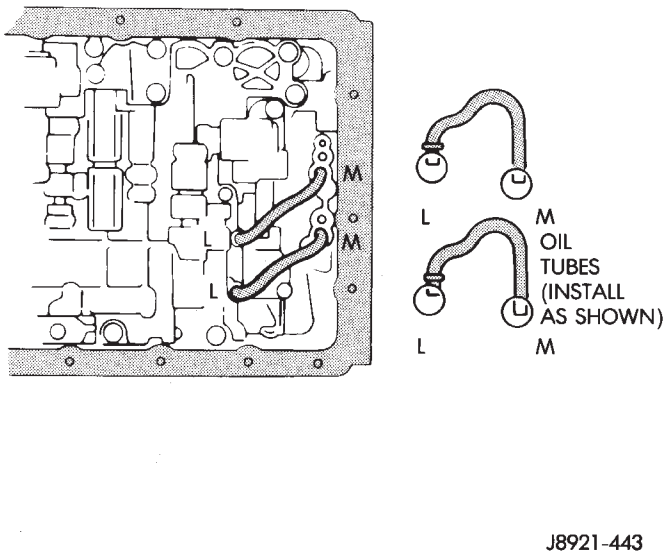

Fig. 18 Installing Transmission Valve Body Oil Tubes

(8) Clean oil screen and oil pan with solvent (if not done previously). Dry both components with compressed air only. Do not use shop towels.

(9) Install new gaskets on oil screen and install screen on case. Tighten screen attaching bolts to 10 N·m (7 ft. lbs.) torque.

(10) Apply bead of Mopar or Loctite 599 sealer to sealing surface of oil pan. Sealer bead should be at least 3 mm (1/8 in.) wide. Then install oil pan and tighten pan bolts to 7.4 N·m (65 in. lbs.) torque.

(11) Install new gasket on oil pan drain plug and install plug in pan. Tighten plug to 20 N·m (15 ft. lbs.) torque.

(12) Fill transmission with Mopar Dexron IIE/Mercon.

MANUAL VALVE SHAFT SEAL REPLACEMENT

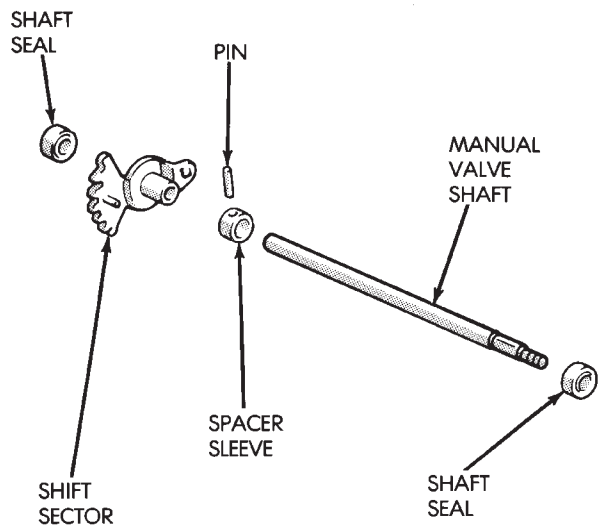

Fig. 19 Manual Valve Shaft And Seals

(1) Remove park/neutral position switch and disconnect transmission shift lever.

(2) Remove oil pan and valve body.

(3) Remove bolts attaching park rod bracket to case (Fig. 20).

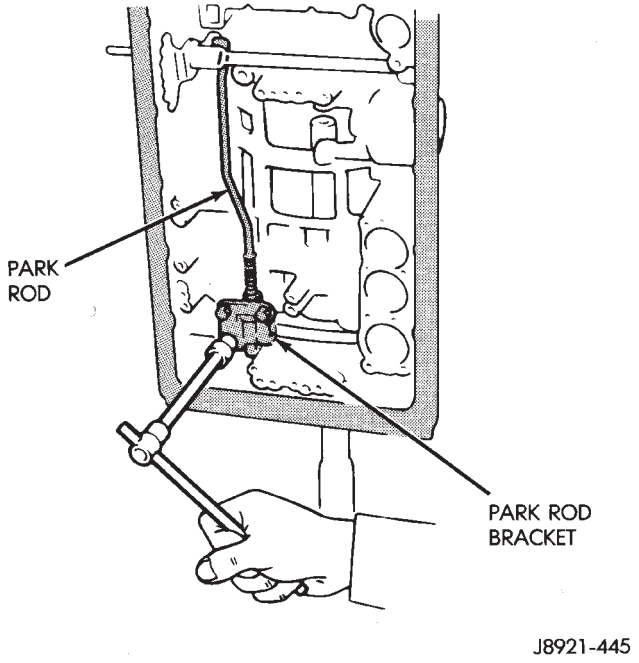

Fig. 20 Removing/Installing Park Rod Bracket

(4) Remove park rod from shift sector (Fig. 21).

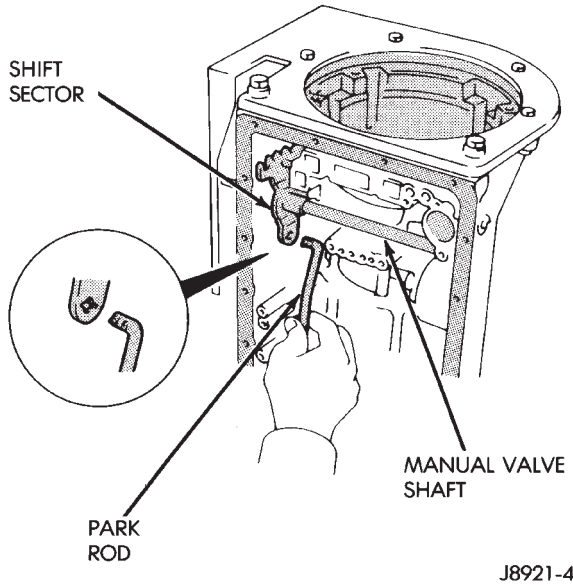

Fig. 21 Removing/Installing Park Rod

(5) Cut spacer sleeve with chisel and remove it from manual valve shaft (Fig. 22).

(6) Remove pin from shaft and sector with pin punch.

(7) Remove shaft and sector from case.

(8) Pry shaft seals out of case (Fig. 23).

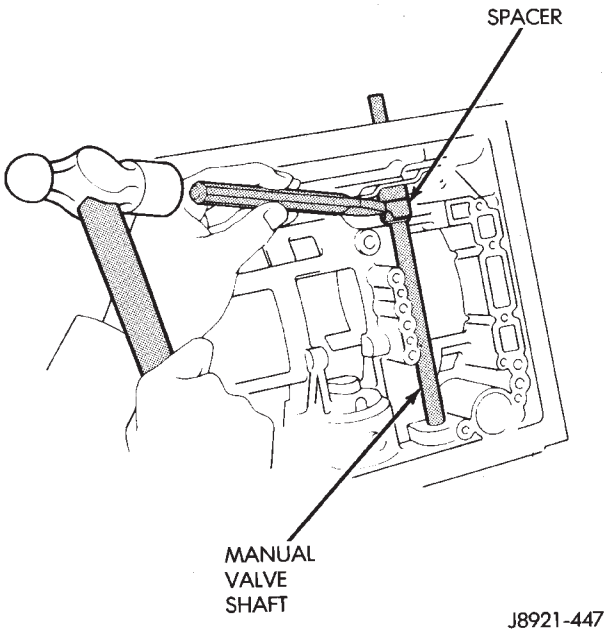

Fig. 22 Cutting Spacer Sleeve

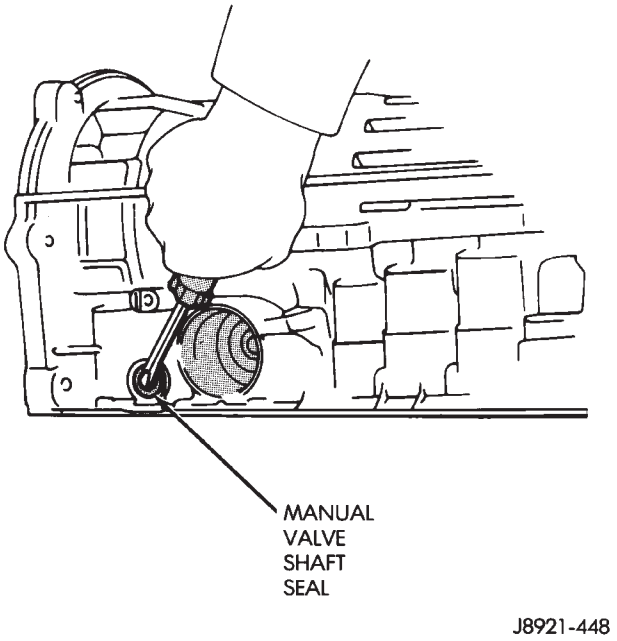

Fig. 23 Removing Manual Valve Shaft Seals

(9) Inspect the manual valve shaft and sector. Replace either component if worn or damaged.

(10) Coat replacement shaft seals with petroleum jelly and seat them in the case (Fig. 24).

(11) Install new spacer sleeve on sector (Fig. 25).

(12) Lubricate manual valve shaft with petroleum jelly and install it in case.

(13) Lubricate sector and sleeve with petroleum jelly and install them on shaft.

(14) Align hole in spacer sleeve with notch in sector. Then install shift sector roll pin. Tap pin into sector and shaft and stake sleeve to sector and shaft securely.

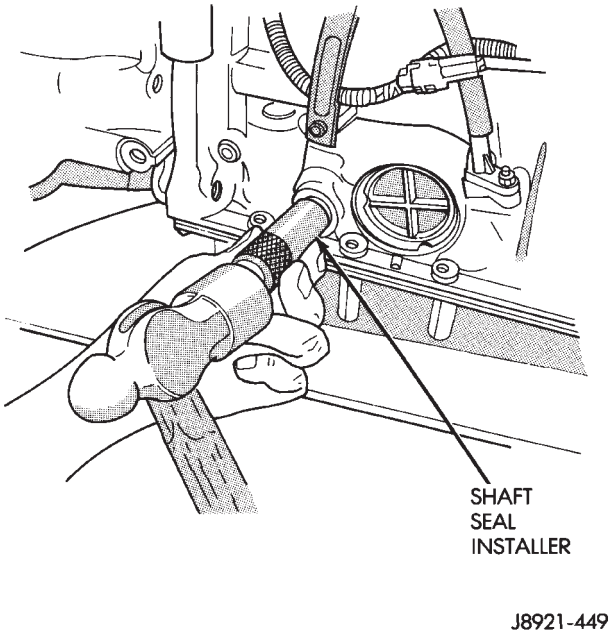

Fig. 24 Installing Manual Valve Shaft Seals

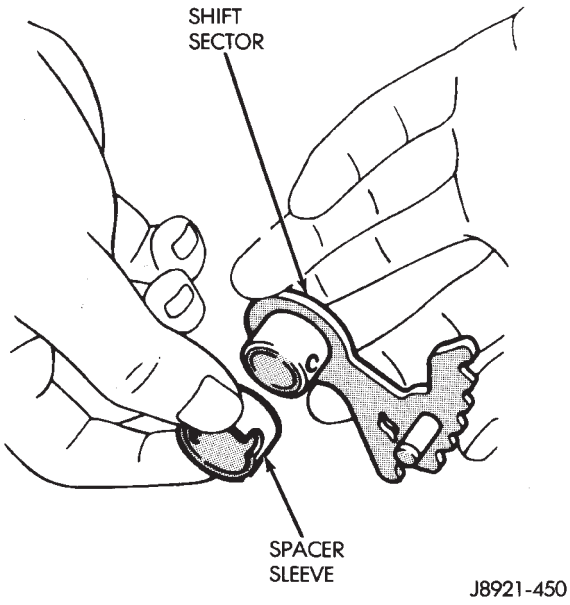

Fig. 25 Installing Spacer Sleeve On Sector

(15) Connect park rod to sector (Fig. 21).

(16) Install park rod bracket (Fig. 26). Tighten bracket bolts to 10 N·m (7 ft. lbs.) torque.

(17) Install valve body, oil screen and oil pan. Use Mopar or Loctite 599 sealer on oil pan seal surface.

(18) Install park/neutral position switch.

ACCUMULATOR PISTONS AND SPRINGS

ACCUMULATOR PISTON AND SPRING REMOVAL

(1) Remove valve body. Refer to procedure in this section.

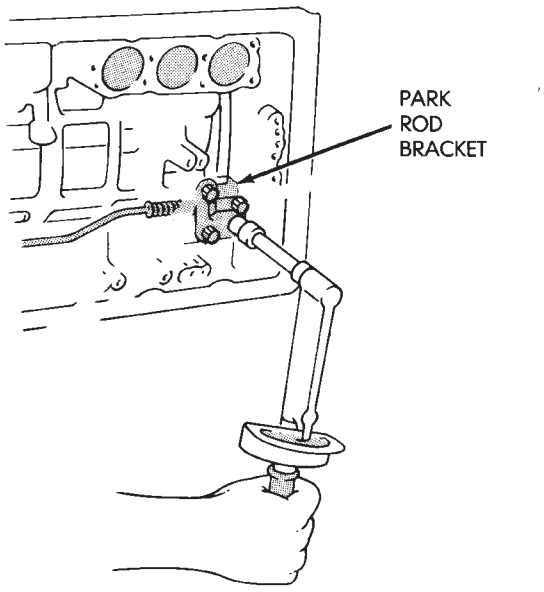

Fig. 26 Installing Park Rod Bracket

(2) Remove accumulator pistons with compressed air (Fig. 27). Apply air through small feed hole next to each piston bore. Catch each piston in a shop towel as it exits bore.

CAUTION: Use only enough air pressure to ease each piston out of the bore. In addition, remove the pistons one at a time and tag the pistons and springs for assembly reference. Do not intermix them.

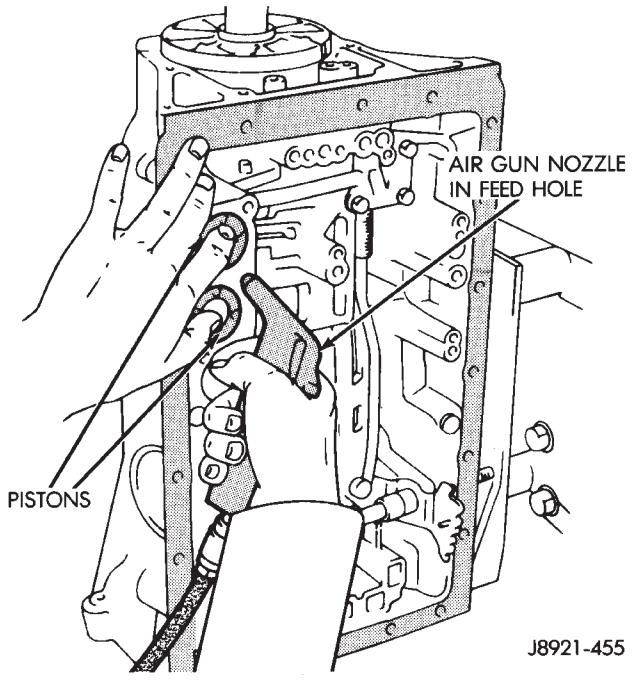

Fig. 27 Accumulator Piston Removal

(3) Remove and discard piston O-ring seals. Then clean pistons and springs with solvent.

(4) Inspect pistons, springs and piston bores. Replace worn damaged pistons. Replace broken, collapsed or distorted springs. Replace case if piston bores are damaged.

(5) If small cushion spring in any piston must be replaced, remove spring retainer clip and remove spring from piston (Fig. 28). A small hooked tool or small thin blade screwdriver can be used to remove clip. A thin wall, deep socket, or pin punch can be used to reseat clip after spring replacement.

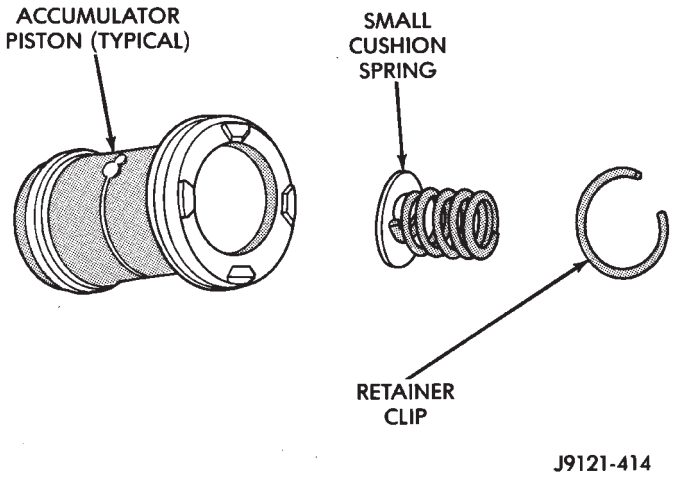

Fig. 28 Small Cushion Spring Retention

(6) Install new O-ring seals on pistons. Lubricate seals and pistons and piston bores with transmission fluid.

(7) Install pistons and springs (Fig. 29).

(8) Install valve body, oil screen and oil pan. Use Mopar or Loctite 599 on oil pan sealing surface.

SECOND COAST BRAKE SERVO

SERVO OVERHAUL

(1) Remove valve body as outlined in this section.

(2) Remove servo piston cover snap ring with snap ring pliers (Fig. 30).

(3) Remove servo piston and cover with compressed air. Apply compressed air through oil hole in servo boss to ease piston out of bore (Fig. 31).

(4) Remove and discard seal and O-rings from cover and piston (Fig. 32). Inspect E-ring, piston, spring and retainer, piston rod and piston spring. Replace worn or damaged parts.

(5) Install new seals on cover and piston.

(6) Lubricate servo components with transmission fluid.

(7) Assemble and install servo components in case. Be sure servo piston rod is properly engaged in the second coast brake band.

(8) Compress cover and piston and install cover snap ring.

(9) Install valve body, oil screen and oil pan. Use Loctite 599 on oil pan sealing surface.

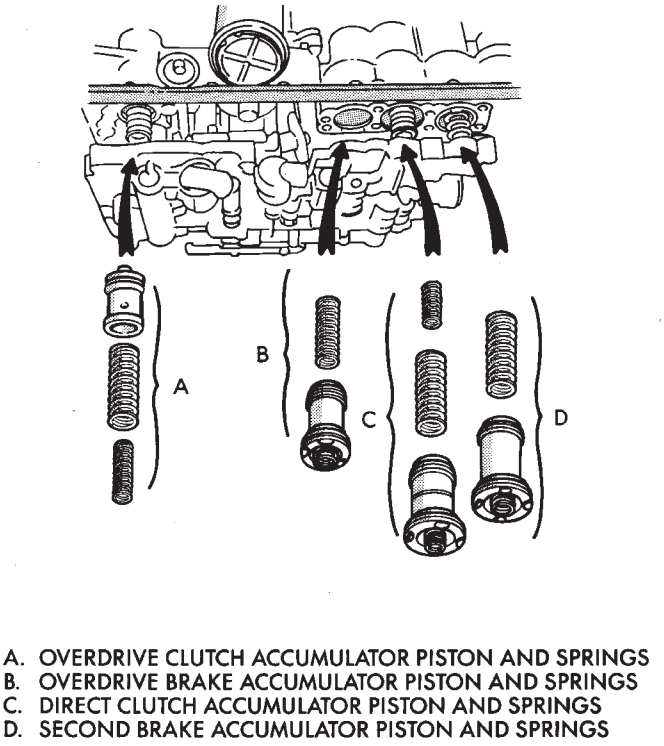

Fig. 29 Accumulator Pistons, Springs And Spacers

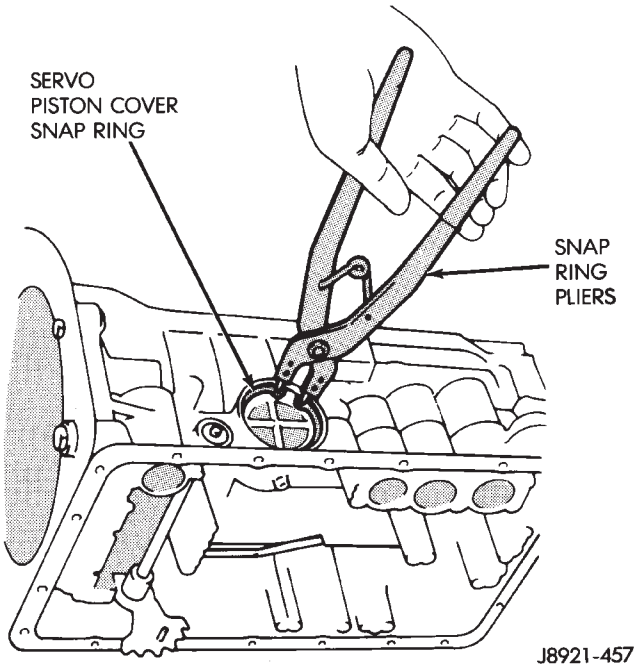

Fig. 30 Removing/Installing Servo Piston Cover Snap Ring

PARK ROD AND PAWL SERVICE

(1) Remove valve body as outlined in this section.

(2) Remove bolts attaching park rod bracket to case (Fig. 33).

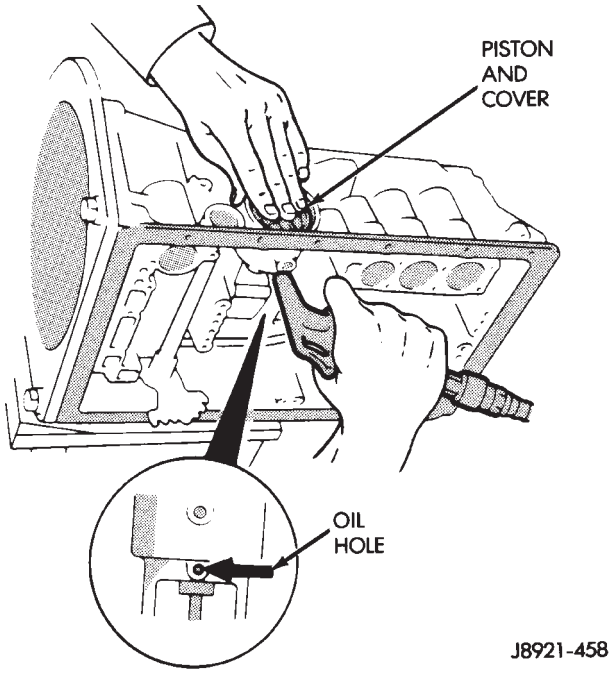

Fig. 31 Removing Servo Cover And Piston

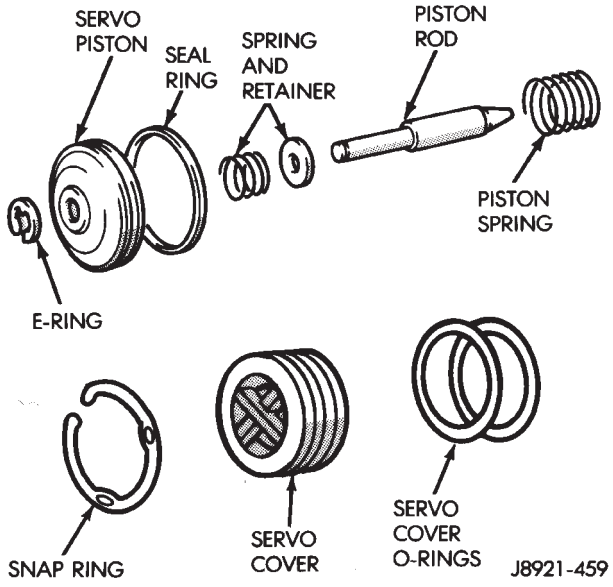

Fig. 32 Second Coast Brake Servo Components

(3) Remove park rod from manual valve shaft sector (Fig. 34).

(4) Remove park rod.

(5) Remove park pawl, pin and spring (Fig. 35).

(6) Examine park rod, pawl, pin and spring. Replace any component that is worn or damaged.

(7) Install pawl in case. Insert pin and install spring. Be sure spring is positioned as shown in Figure 35.

(8) Install park rod and bracket (Fig. 33). Tighten bracket bolts to 10 N·m (7 ft. lbs.) torque.

(9) Install valve body, oil screen and oil pan as outlined in this section.

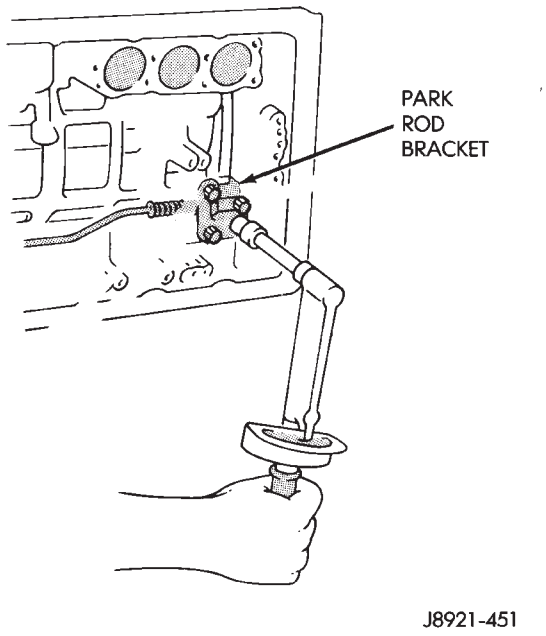

Fig. 33 Removing/Installing Park Rod Bracket

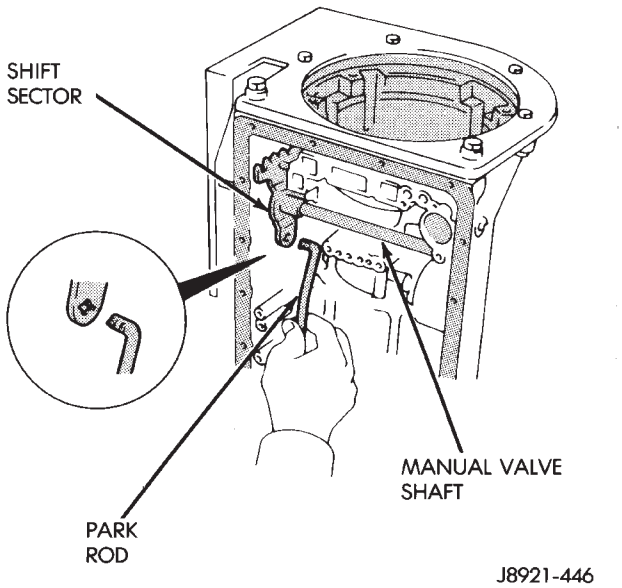

Fig. 34 Removing/Installing Park Rod

ADAPTER HOUSING SEAL REPLACEMENT

(1) Raise vehicle.

(2) Disconnect or remove components necessary to gain access to seal (e.g. propeller shaft, crossmember, shift linkage, transfer case, exhaust components, hoses, wires).

(3) Remove dust shield and remove seal from adapter housing (Fig. 36).

(4) Install new seal with appropriate size seal installer and install dust shield.

(5) Reinstall components removed to gain access to seal.

(6) Top off transmission fluid if necessary.

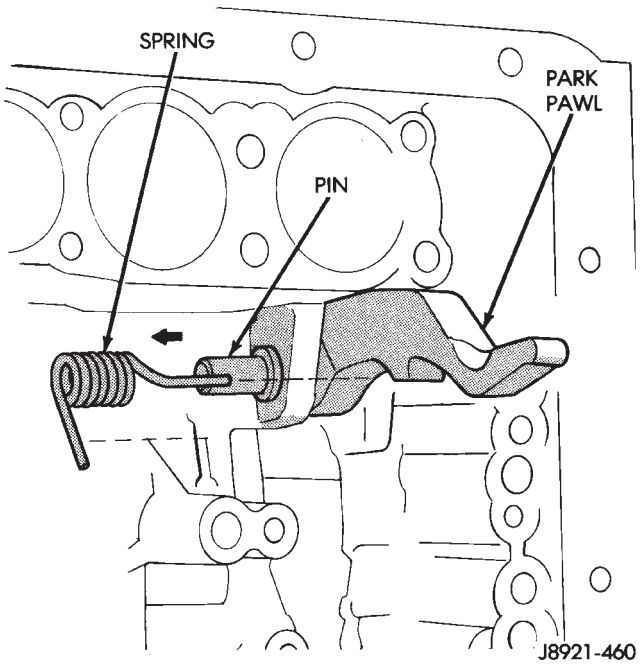

Fig. 35 Removing/Installing Park Pawl, Pin And Spring

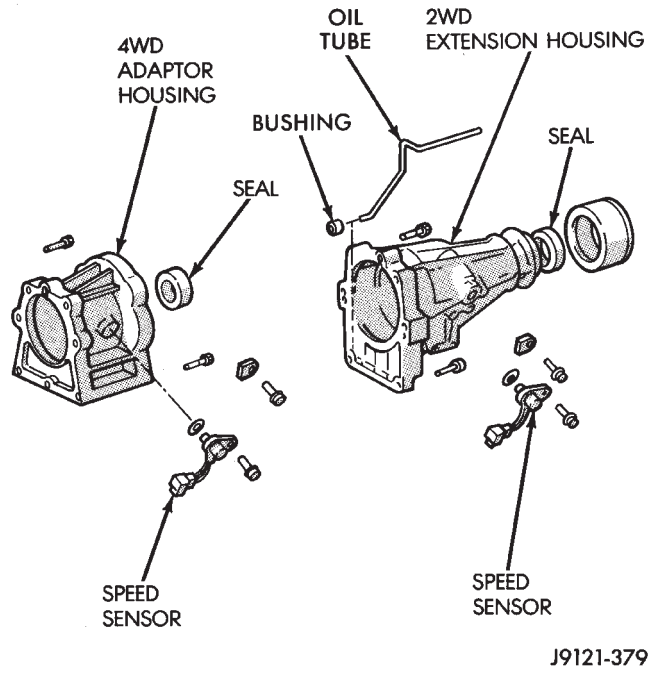

Fig. 36 Adapter Housing Seals

SPEED SENSOR

SPEED SENSOR TESTING

Test the speed sensor with an ohmmeter. Place the ohmmeter leads on the terminals in the sensor connector (Fig. 37).

Rotate the transmission output shaft and observe the ohmmeter needle. The needle should deflect indicating the switch is opening/closing as the rotor moves past the sensor (Fig. 37). Replace the sensor if the ohmmeter does not display any kind of reading.

If a digital ohmmeter is being used, the sensor should generate an ohmmeter readout each time the switch opens and closes.

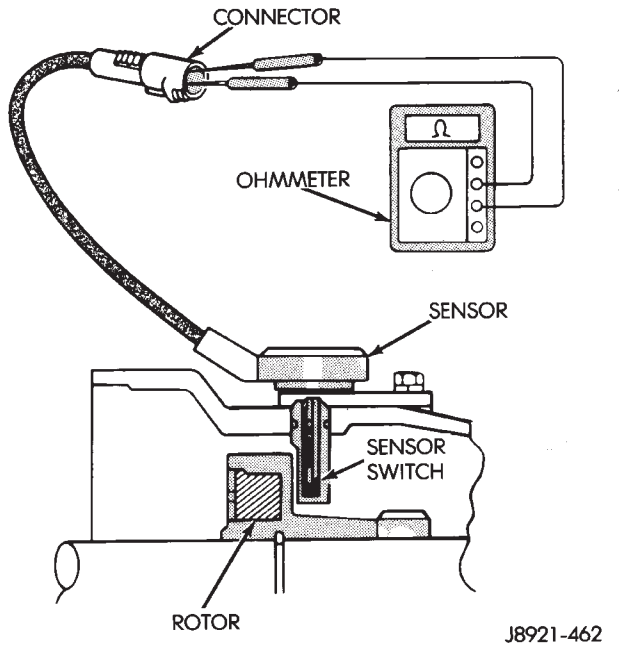

Fig. 37 Speed Sensor Testing

SPEED SENSOR REPLACEMENT

(1) Disconnect sensor wire harness connector.

(2) Remove sensor retainer bolt and remove sensor (Fig. 38).

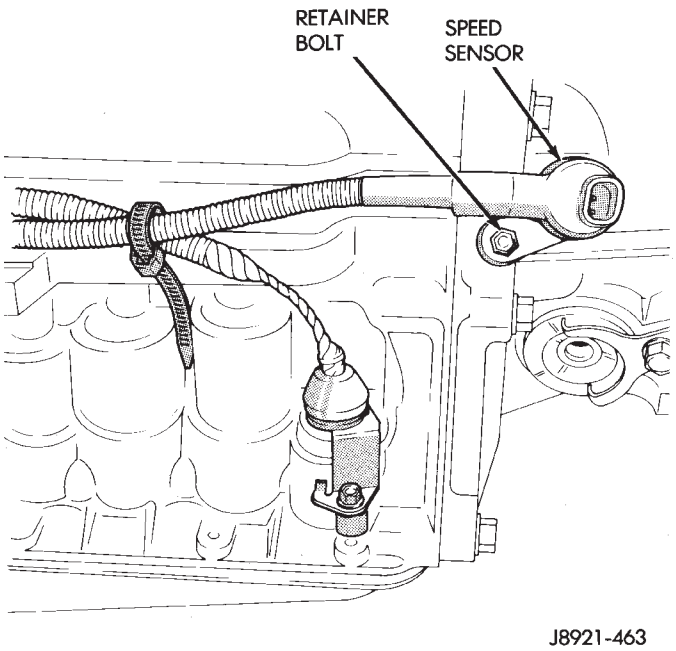

Fig. 38 Transmission Speed Sensor Removal/ Installation

(3) Remove and discard speed sensor O-ring.

(4) Install new O-ring on speed sensor and install sensor in transmission case.

(5) Install sensor bracket and retainer bolt. Tighten bolt to 7.4 N·m (65 in. lbs.) torque.

(6) Connect sensor wire harness connector.

SPEED SENSOR ROTOR—SPEEDOMETER DRIVE GEAR

ROTOR—DRIVE GEAR REMOVAL

(1) Raise vehicle.

(2) Remove components necessary to gain access to rotor and drive gear such as propeller shaft, transfer case, crossmember, and shift linkage.

(3) Disconnect speedometer cable and/or speed sensor.

(4) Remove adaptor housing.

(5) Remove speedometer drive gear snap ring (Fig. 39).

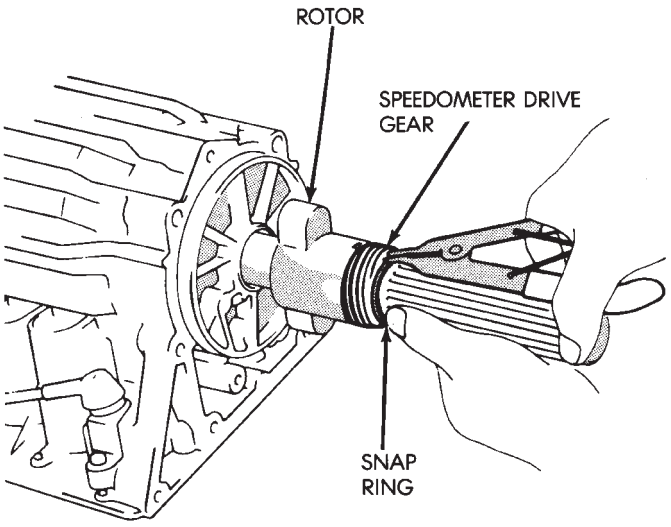

Fig. 39 Removing/Installation Speedometer Drive Gear

(6) Remove the speedometer drive gear and spacer (if equipped).

(7) Remove rotor by carefully prying it off output shaft with wood dowel or hammer handle (Fig. 40).

(8) Clean sealing surfaces of transmission case and extension/adaptor housing.

ROTOR AND DRIVE GEAR INSTALLATION

(1) Install rotor, spacer (if equipped) and drive gear on output shaft. Then install drive gear snap ring (Fig. 39).

(2) Apply bead of Loctite 599 sealer, to transmission case sealing surface and install extension/ adapter housing on case.

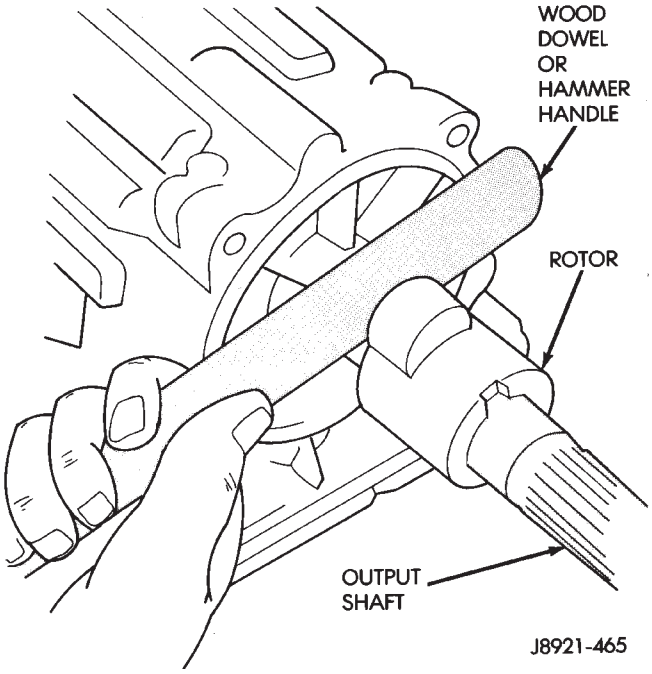

Fig. 40 Removing Speed Sensor Rotor

(3) Tighten adaptor housing bolts to 34 N·m (25 ft. lbs.) torque.

(4) Install components removed to gain access to rotor and drive gear.

THROTTLE POSITION SENSOR (TPS) SERVICE

A separate throttle position sensor is used for automatic transmission applications. The sensor is attached to the base of the throttle body. Refer to Group 14 for TPS service and adjustment.

TRANSMISSION THROTTLE CABLE REPLACEMENT

THROTTLE CABLE REMOVAL

(1) In engine compartment, disconnect cable from throttle linkage. Then compress cable mounting ears and remove cable from engine bracket (Fig. 41).

(2) Raise vehicle.

(3) Remove transmission oil pan.

(4) Disengage cable from throttle valve cam (Fig. 42).

(5) Remove cable bracket bolt and remove cable and bracket from case (Fig. 43).

(6) Remove and discard cable seal.

THROTTLE CABLE INSTALLATION

(1) Lubricate and install new seal on cable.

(2) Insert cable in transmission case.

(3) Attach cable to throttle cam (Fig. 42).

(4) Install cable bracket on case and tighten attaching bolt to 10 N·m (7 ft-lbs) torque (Fig. 43).

(5) Remove old sealer material from oil pan and transmission case. Clean oil pan with solvent and dry it with compressed air.

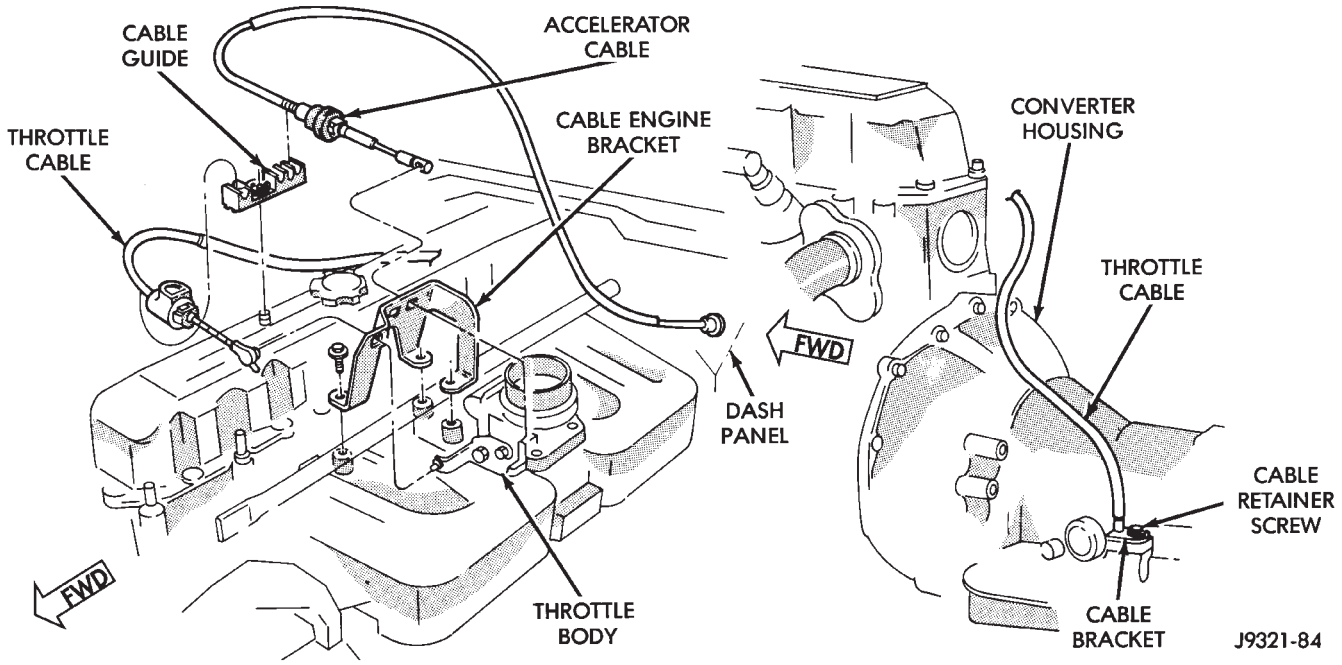

Fig. 41 Transmission Throttle Cable Attachment

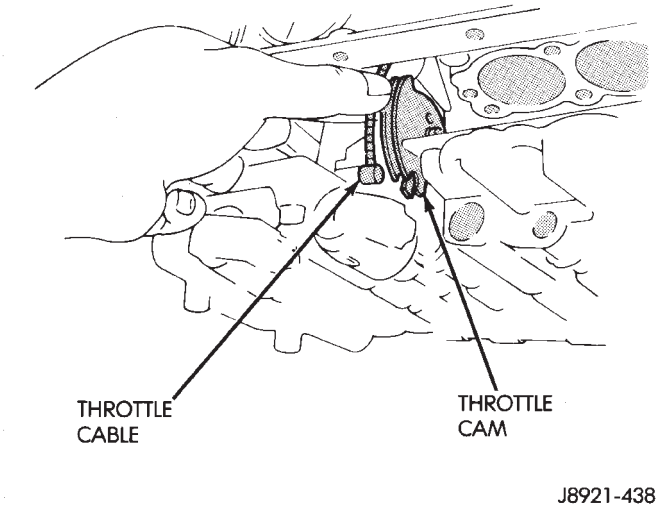

Fig. 42 Removing/Installing Transmission Throttle Cable

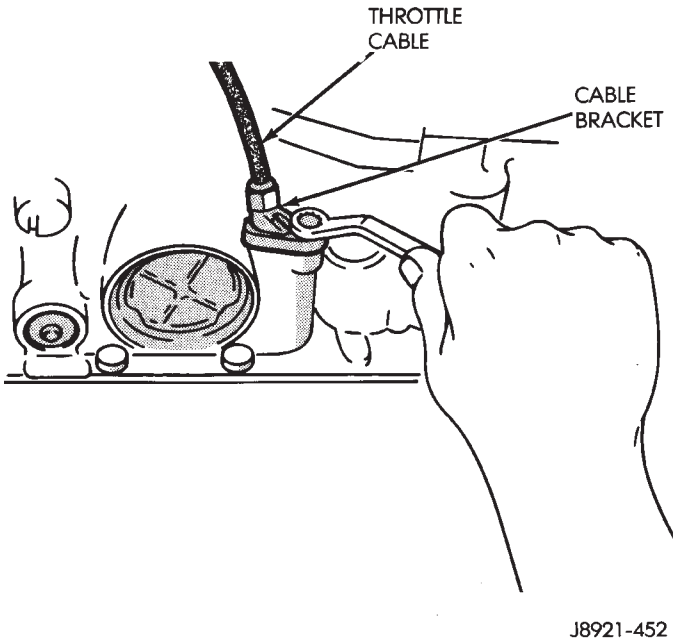

Fig. 43 Removing/Installing Transmission Throttle Cable And Bracket

(6) Apply bead of Loctite 599 sealer to oil pan sealing surface. Sealer bead should be at least 3 mm (1/8 in.) wide. Then install pan and tighten pan bolts to 7 N·m (65 in. lbs.) torque.

(7) Install new gasket on oil pan drain plug. Install and tighten plug to 20 N·m (15 ft. lbs.) torque.

(8) Connect cable to engine bracket and throttle linkage.

(9) Fill transmission with Mopar Dexron/Mercon IIE.

(10) Adjust the cable as described in cable adjustment procedure.

TRANSMISSION THROTTLE CABLE ADJUSTMENT

(1) Shift transmission into Park, shut engine off and raise hood.

(2) Press cable release button (Fig. 44).

(3) Push cable conduit back into cable sheath as far as possible (Fig. 45).

(4) Rotate lever on throttle body to wide open throttle position. Cable will ratchet to correct adjustment point as lever is rotated (Fig. 45).

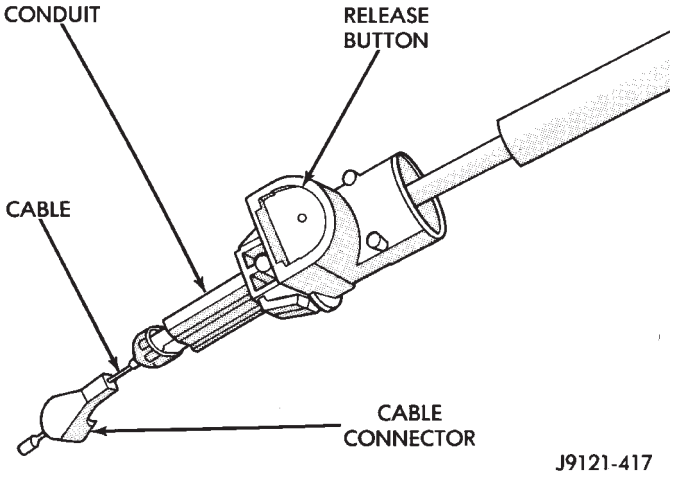

Fig. 44 Throttle Cable Components

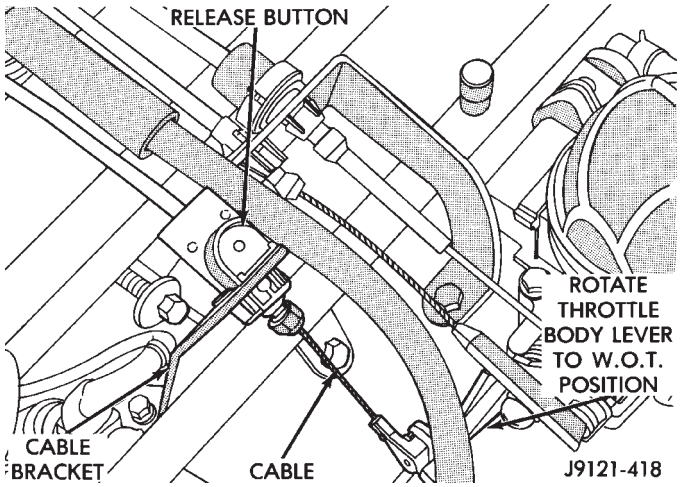

Fig. 45 Throttle Cable Adjustment

SHIFT CABLE ADJUSTMENT

(1) Shift transmission into Park.

(2) Raise vehicle.

(3) Release cable adjuster clamp to unlock cable (Figs. 46 and 47). Clamp is at transmission end of cable.

(4) Unsnap cable from transmission cable bracket (Figs. 46 and 47).

(5) Move transmission shift lever fully rearward to Park detent. Lever is on manual valve shaft at driver side of case.

(6) Verify positive engagement of park lock by attempting to rotate propeller shaft. Shaft will not rotate when park lock is engaged.

(7) Snap cable into cable bracket.

(8) Lock shift cable by pressing cable adjuster clamp down until it snaps into place.

(9) Check engine starting. Engine should start only in Park and Neutral.

(10) Lower vehicle.

PARK INTERLOCK CABLE ADJUSTMENT

(1) Shift transmission into Park.

(2) Turn ignition switch to Lock position.

(3) Remove shift lever bezel and console screws. Raise bezel and console for access to cable.

(4) Pull cable lock button up to release cable (Fig. 47).

(5) Pull cable forward. Then release cable and press cable lock button down until it snaps in place.

(6) Check adjustment as follows:

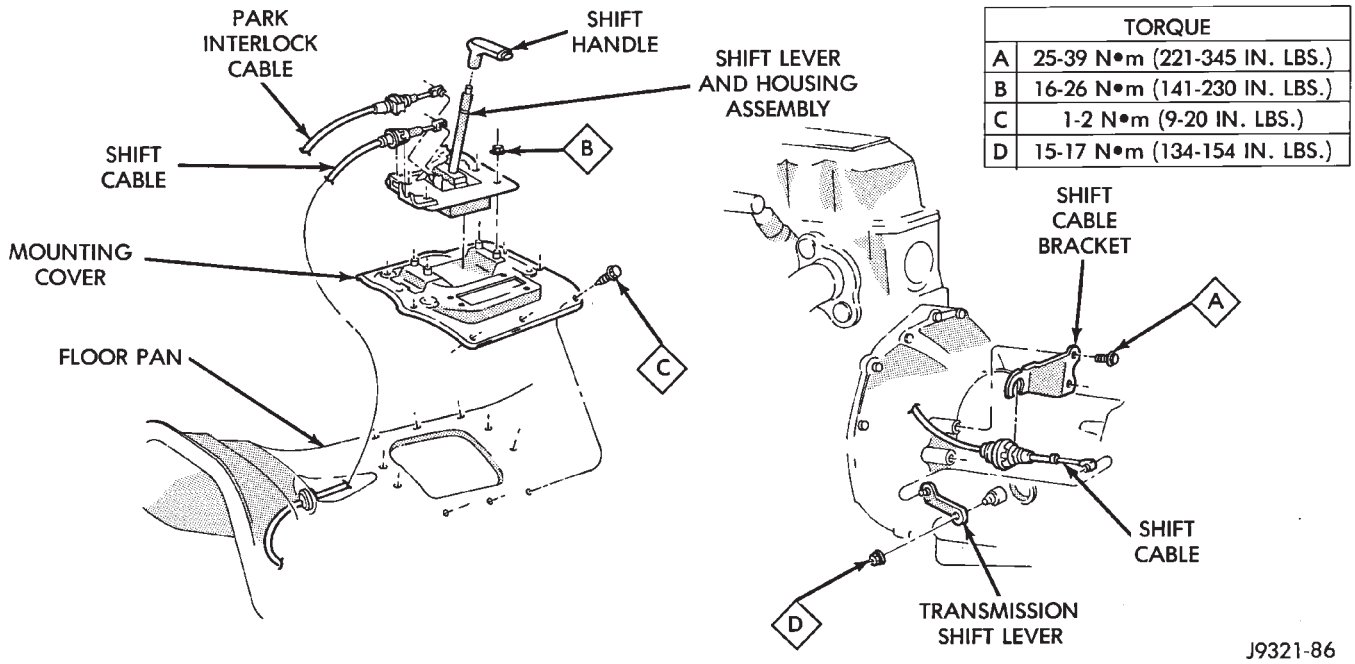

TORQUE	
A	25-39 N•m (221-345 IN. LBS.)
B	16-26 N•m (141-230 IN. LBS.)
C	1-2 N•m (9-20 IN. LBS.)
D	15-17 N•m (134-154 IN. LBS.)

Fig. 46 Shift and Interlock Cables

(a) Check movement of release shift handle button (floor shift) or release lever (column shift). You should not be able to press button inward or move column lever.

(b) Turn ignition switch to On position.

(c) Press floor shift lever release button or move column lever. Then shift into Neutral. If cable adjustment is correct, ignition switch can not be turned to Lock position. Perform same check with transmission in D range.

(7) Move shift lever back to Park and check ignition switch operation. You should be able to turn switch to Lock position and shift lever release button/lever should not move.

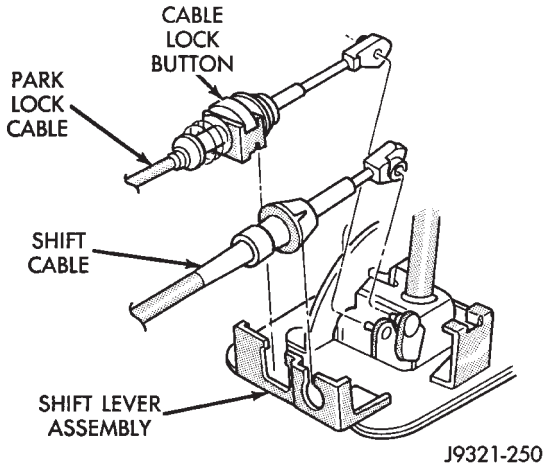

Fig. 47 Park Lock Cable Attachment

TRANSMISSION COOLER SERVICE

Main Cooler

The transmission main cooler is located in the radiator. The main cooler can be flushed when necessary, however, the cooler is not a repairable component. If the cooler is damaged, plugged, or leaking, the radiator will have to be replaced.

Auxiliary Cooler

The auxiliary cooler is mounted in front of the radiator at the driver side of the vehicle (Fig. 48). The cooler can be flushed when necessary, while mounted in the vehicle. The cooler can also be removed for access, repair, or replacement as needed.

The main and auxiliary coolers should both be flushed whenever a transmission or converter clutch malfunction generates sludge, debris, or particles of clutch friction material.

Cooler Service

The main cooler (and radiator) and the auxiliary cooler can be removed for service or access to other components. Auxiliary cooler removal requires that

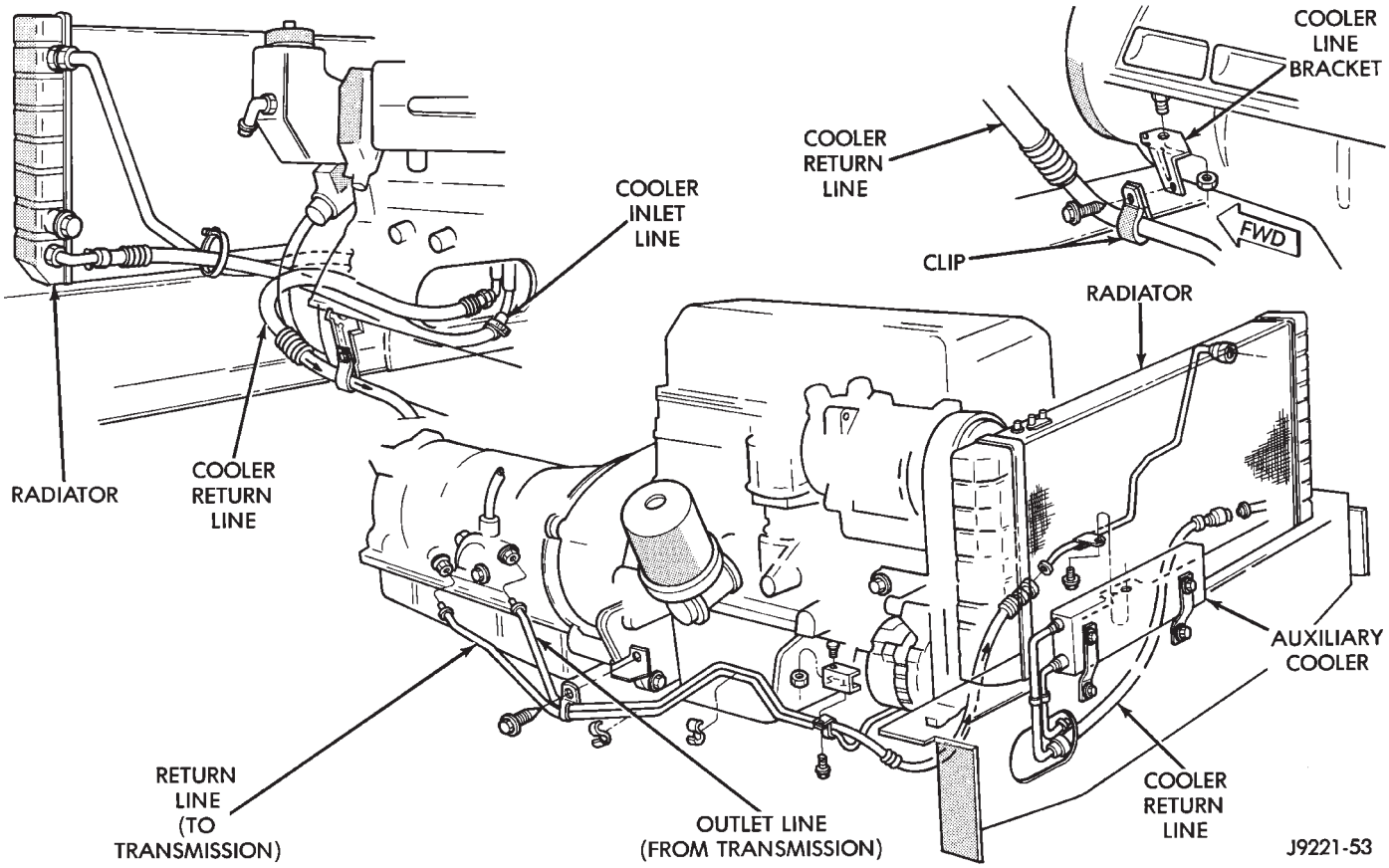

Fig. 48 Auxiliary Cooler Mounting (Left Hand Drive)

the front bumper and radiator support be removed for access to the cooler lines and attaching bracket.

REVERSE FLUSHING MAIN AND AUXILIARY COOLERS AND COOLER LINES

Reverse flushing the cooler and lines will prevent sludge and particles from flowing back into the transmission after repair. The flushing procedure applies to standard (in-radiator) coolers and auxiliary coolers equally.

Pressure equipment is preferred for reverse flushing. However, reverse flushing can be performed using hand operated equipment as described in the following procedure.

(1) Disconnect cooler lines at transmission and at auxiliary cooler (Figs. 48 and 49).

(2) Position drain pan under cooler line to catch material flushed through coolers and lines.

(3) Reverse flush each cooler using hand operated suction gun filled with mineral spirits. Insert gun nozzle (or hose) into cooler inlet (return) line. Then force mineral spirits through into line and through cooler.

(4) Continue reverse flushing until fluid exiting inlet (pressure) line is clear and free of debris/residue.

(5) Replace radiator if fluid cannot be pumped through main cooler. Replace auxiliary cooler if leaks are evident, or if fluid cannot be pumped through it.

(6) Clear flushing materials from coolers and lines with short pulses of compressed air. Insert air gun nozzle into cooler inlet (return) line and continue short pulses of air until all fluid is cleared from cooler and lines.

(7) Pump one quart of fresh automatic transmission fluid through cooler and lines before reconnecting cooler lines.

FLOW TESTING TRANSMISSION MAIN COOLER

Cooler flow is checked by measuring the amount of fluid flow through the cooler in a 20 second time period. The test is performed with the engine running and transmission in neutral. Fluid is then pumped through the cooler by the transmission oil pump.

(1) Disconnect cooler inlet line at transmission fitting.

(2) Securely attach hose to end of inlet line and position line in a one quart test container.

(3) Add extra quart of fluid to transmission.

(4) Use stopwatch to check flow test time.

(5) Shift transmission into neutral and set parking brake.

(6) Start and run engine at curb idle speed and immediately note cooler flow. Approximately one quart of fluid should flow into test container in 20 second period.

(7) If cooler flow is intermittent, flows less than one quart in 20 seconds, or does not flow at all, cooler is faulty and must be replaced.

TRANSMISSION COOLER LINE FITTINGS

Quick connect fittings are used at the transmission cooler line connections. The fitting seals and guides are serviceable.

Replace the seals and guides whenever the fittings exhibit leakage, or will not properly snap into place.

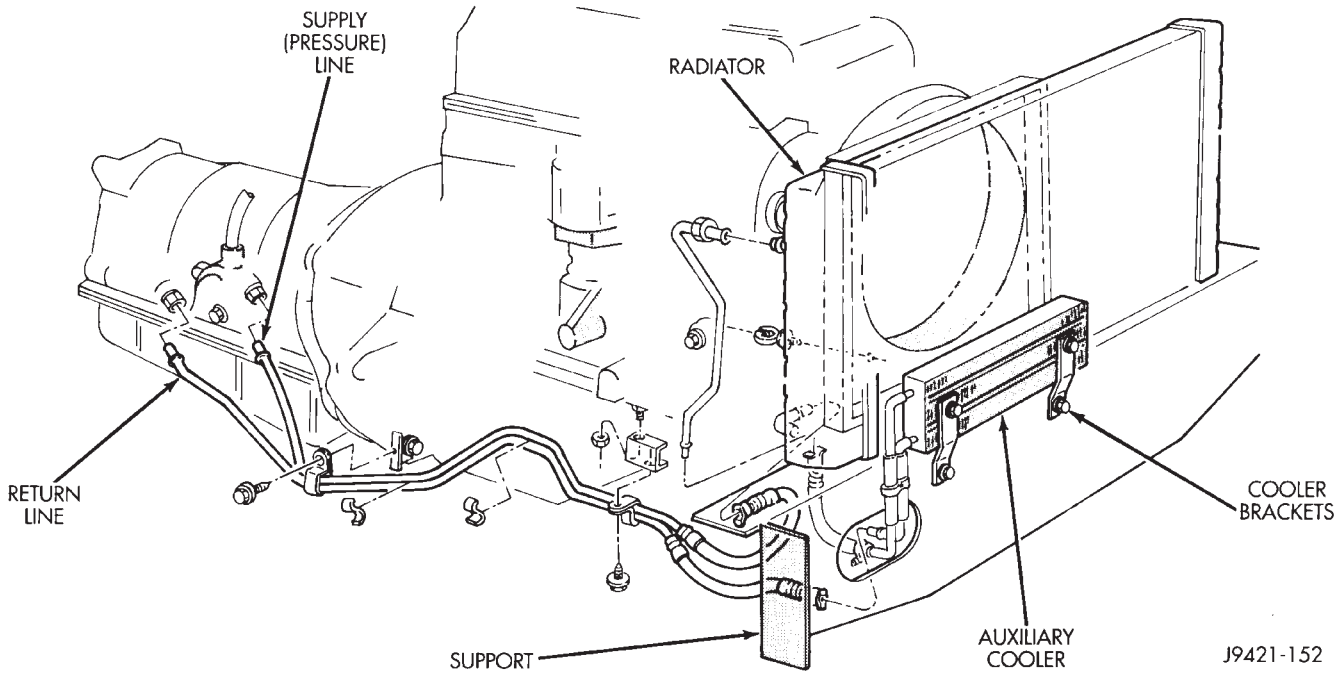

Fig. 49 Auxiliary Cooler Mounting (Right Hand Drive)

AW-4 TRANSMISSION REMOVAL AND INSTALLATION

INDEX

page

Oil Pump Seal Replacement 199
Torque Converter Stator Clutch Inspection 199
Transmission and Torque Converter Installation . . 199
Transmission and Torque Converter Removal 198

TRANSMISSION AND TORQUE CONVERTER REMOVAL

(1) Raise vehicle.

(2) Drain transmission fluid and reinstall oil pan drain plug.

(3) On models with 2-piece fill tube, remove upper half of tube (Fig. 1).

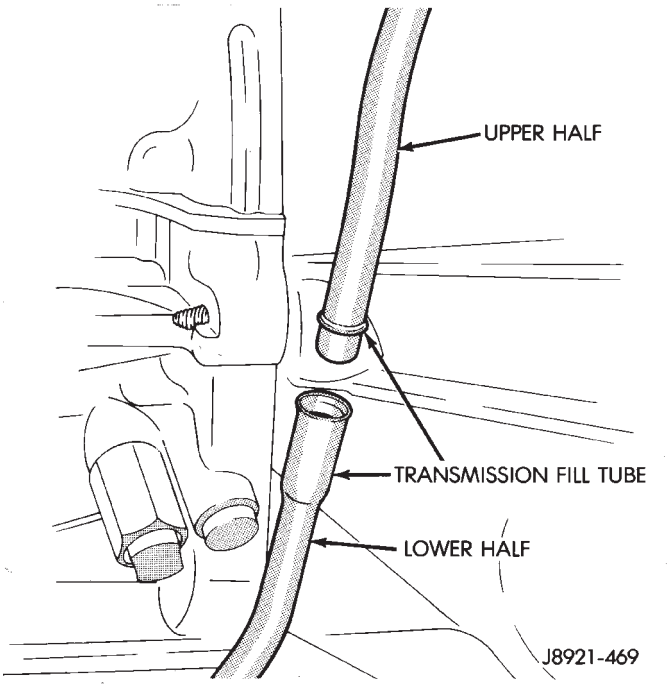

Fig. 1 Transmission Fill Tube (Two-Piece)

(4) Disconnect cooler lines at transmission. Cooler lines have quick-disconnect fittings. Press fitting release tabs and pull cooler lines and fittings out of case or use Special Tool 7555 to disconnect them.

(5) Support engine with safety stand and support transmission with jack.

(6) Disconnect transmission and transfer case shift linkage.

(7) Remove necessary exhaust components.

(8) Disconnect vehicle speed sensor wires

(9) Mark position of front and rear propeller shafts for alignment reference. Then remove shafts from vehicle.

(10) Remove rear crossmember.

(11) Disconnect transmission shift cable at transmission. Then disconnect transmission throttle valve cable at engine.

(12) Disconnect necessary vacuum and fluid hoses.

(13) Remove transfer case from transmission.

(14) Disconnect and remove crankshaft position sensor (Fig. 2).

CAUTION: The crankshaft position sensor can be damaged during transmission removal (or installation) if the sensor is still bolted to the engine block. To avoid damage, remove the sensor before removing the transmission.

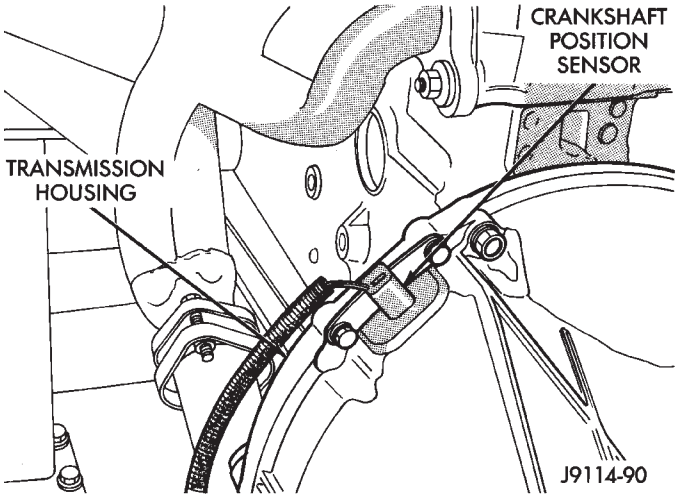

Fig. 2 Crankshaft Position Sensor

(15) Remove starter motor.

(16) Remove bolts attaching converter to drive plate.

(17) Remove bolts attaching converter housing to engine.

(18) Secure transmission to jack with safety chains.

(19) Pull transmission rearward for access to converter. Then secure converter in pump with C-clamp or strap bolted to converter housing.

(20) Remove transmission from under vehicle.

(21) Remove torque converter if converter or oil pump seal are to be serviced.

TORQUE CONVERTER STATOR CLUTCH INSPECTION

(1) Insert Rotating Tool 7547 into converter hub and seat tool in one-way clutch (Fig. 3).

(2) Insert Stopper Tool 7548 in one converter hub notch and into outer race of rotating tool.

(3) Turn rotating tool clockwise. Converter clutch should rotate freely and smoothly. Less than 2.5 N·m (22 in. lbs.) of torque should be required to rotate clutch in clockwise direction.

(4) Turn rotating tool in counterclockwise direction. Converter clutch should lock.

(5) Replace converter if clutch binds or will not lock.

OIL PUMP SEAL REPLACEMENT

(1) Remove converter.

(2) Remove old seal. Use blunt punch to collapse seal and pry seal out of pump housing. Do not scratch or damage seal bore.

(3) Lubricate lip of new seal with transmission fluid and install seal in pump with tool 7549 (Fig. 4).

(4) Lubricate converter drive hub with transmission fluid.

(5) Align and install converter in oil pump.

TRANSMISSION AND TORQUE CONVERTER INSTALLATION

(1) Mount transmission on transmission jack. Then secure transmission to jack with safety chains.

(2) Lubricate converter drive hub and oil pump seal lip with transmission fluid. Then install converter. Be sure converter is fully seated in oil pump gears before proceeding. Hold converter in place with C-clamp or strap attached to converter housing.

(3) Align and position transmission and converter on engine.

(4) Remove clamp or strap used to hold torque converter in place.

(5) Move transmission forward seat and it on engine. Be sure torque converter hub is fully seated.

(6) Install converter housing-to-engine bolts (Fig. 5).

(7) Install converter-to-drive plate bolts.

(8) Install and connect starter motor.

(9) Install and connect crankshaft position sensor.

(10) Install transfer case on transmission. Tighten transfer case attaching nuts to 41 N·m (30 ft. lbs.) torque

(11) Connect transfer case shift linkage and vacuum hoses.

(12) Connect exhaust components.

(13) Install rear crossmember and remove jack used to support transmission assembly.

(14) Connect speed sensor wire harness to sensor.

(15) Connect wire harness to park/neutral position switch.

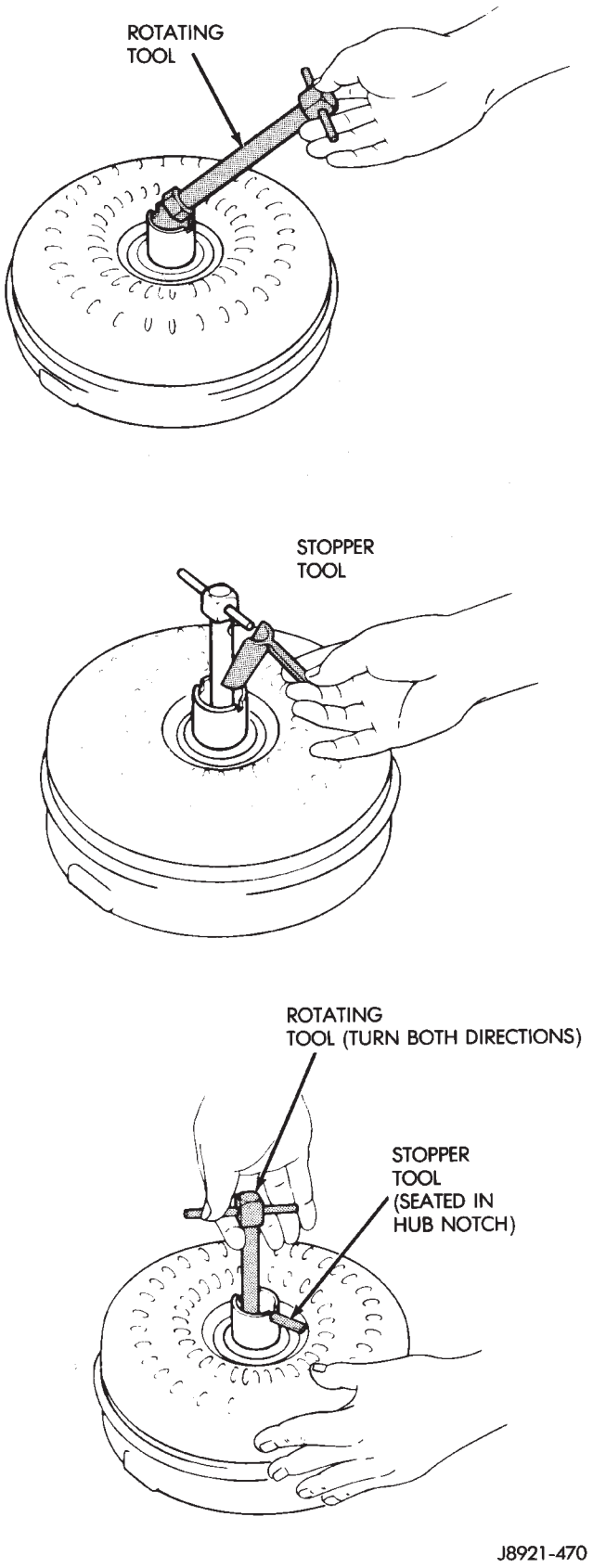

Fig. 3 Checking Operation Of Torque Converter Stator One-Way Clutch

(16) Align and connect front and rear propeller shafts.

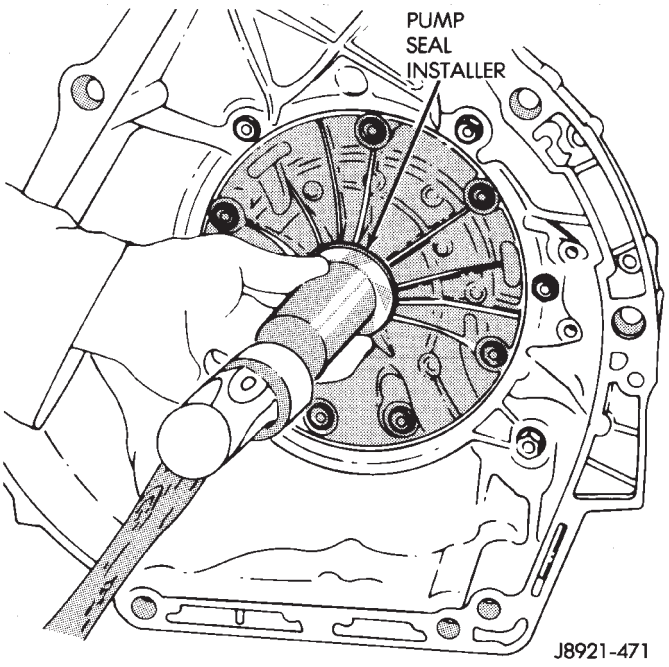

Fig. 4 Installing Oil Pump Seal

(17) Connect transmission wire harnesses and transfer case vacuum and wire harnesses.

(18) Connect transmission cooler lines.

(19) Connect transmission throttle cable at engine.

(20) Install new O-ring seal on upper half of transmission fill tube. Then connect upper and lower tube halves.

(21) Lower vehicle.

(22) Fill transmission with Mopar Dexron IIE/Mercon automatic transmission fluid.

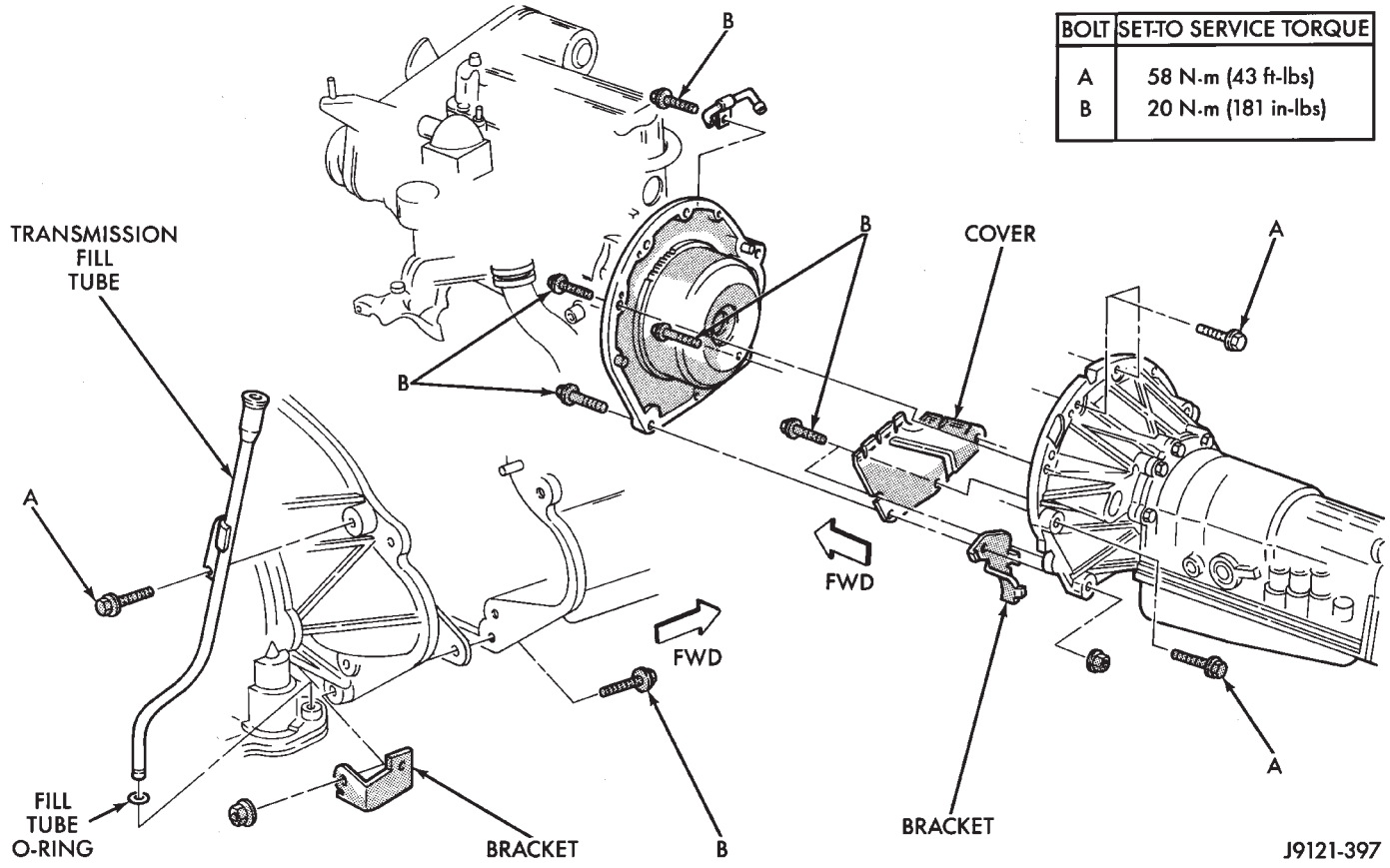

Fig. 5 Transmission Mounting

AW-4 TRANSMISSION OVERHAUL

INDEX

	page
Cleaning and Inspection	214
Direct Clutch Overhaul	228
First-Reverse Brake Piston and Transmission Case Overhaul	247
Forward Clutch Overhaul	232
Front Planetary Gear Overhaul	237
Manual Valve Shaft Overhaul	215
Oil Pump Overhaul	216
Overdrive Planetary Gear and Clutch Overhaul	218
Overdrive Support Overhaul	226
Overhaul Service Tools	201
Rear Planetary, No. 2 One-Way Clutch and Output Shaft Overhaul	244
Second Brake Overhaul	241
Sun Gear and No. 1 One-Way Clutch Overhaul	238
Transmission Assembly and Adjustment	265
Transmission Disassembly	201
Transmission Valve Body Overhaul	250

OVERHAUL SERVICE TOOLS

The special tools needed to overhaul the AW-4 transmission are provided in Tool Kit 6294. However, Pressure Test Port Adapter 7554 is not included in this kit and must be ordered separately. The overhaul tool kit and test port adapter are available through the parts division and dealer special tool program.

TRANSMISSION DISASSEMBLY

(1) Remove torque converter.

(2) Remove lower half of filler tube if not previously removed.

(3) Remove clamps attaching wire harness and throttle cable (Fig. 1) to transmission.

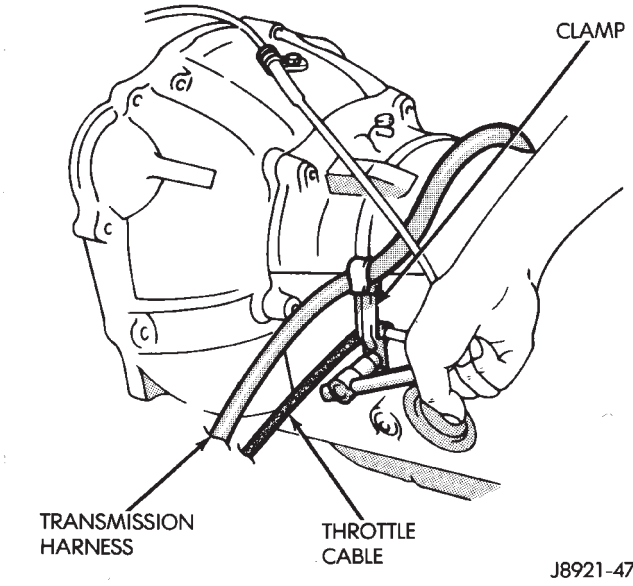

Fig. 1 Typical Harness And Cable Clamp Attachment

(4) Remove shift lever from manual valve shaft at left side of transmission.

(5) Remove park/neutral position switch.

(6) Remove speed sensor (Fig. 2).

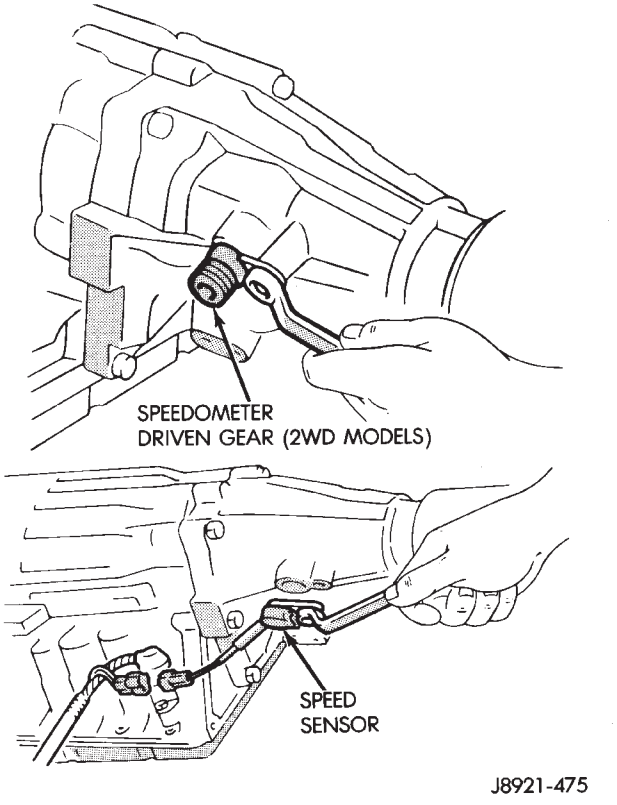

Fig. 2 Speed Sensor Removal

(7) Remove converter housing bolts and remove housing (Fig. 3) from case.

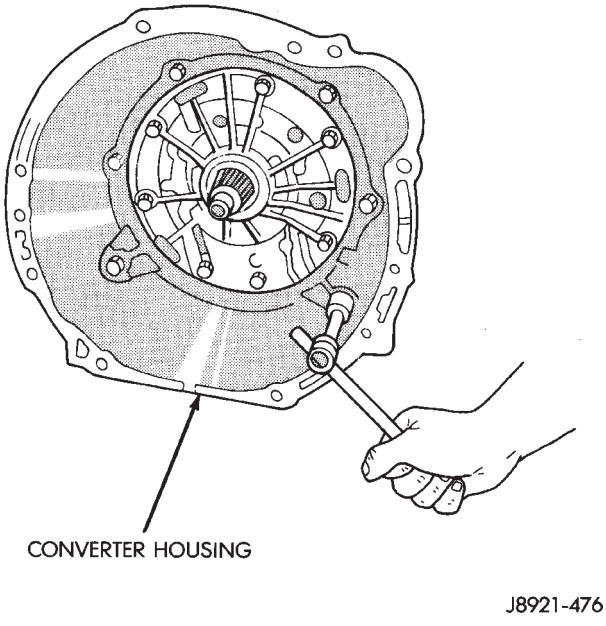

Fig. 3 Converter Housing Removal

(8) Remove adapter housing.

(9) Remove speedometer drive gear snap ring and remove gear and gear spacer if equipped (Fig. 4).

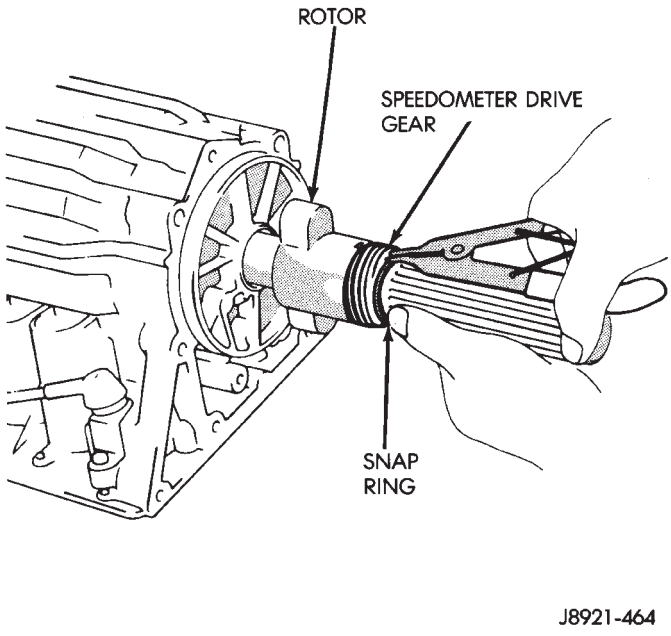

Fig. 4 Removing Speed Sensor And Speedometer Drive Gear

(10) Remove speed sensor rotor and key. Use wood dowel or hammer handle to loosen and remove rotor (Fig. 5).

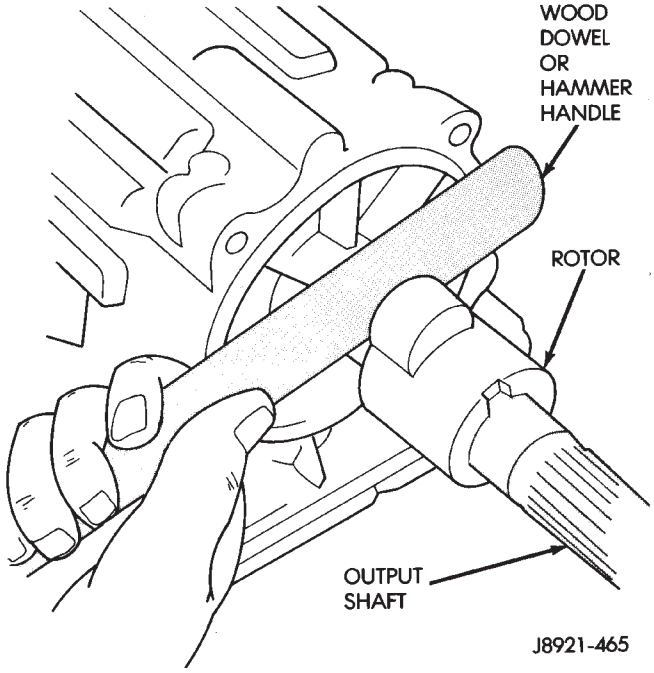

Fig. 5 Removing Transmission Speed Sensor Rotor

(11) Remove transmission oil pan, oil screen and screen gaskets (Fig. 6). Then mount transmission in holding fixture.

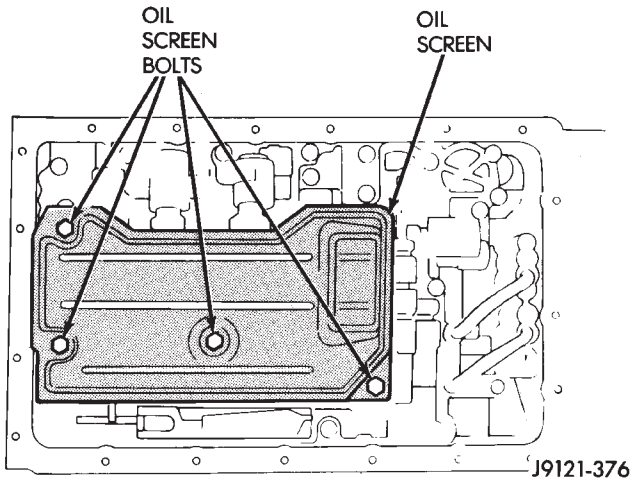

Fig. 6 Removing Oil Screen

(12) Remove valve body oil feed tubes (Fig. 7).

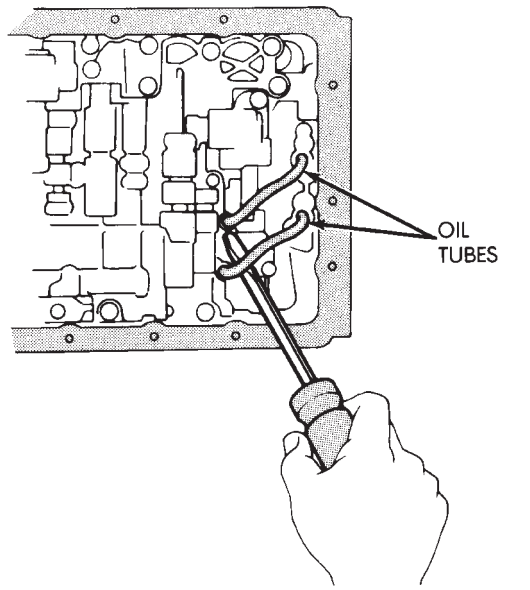

J8921-437

Fig. 7 Valve Body Oil Tube Removal

(13) Disconnect valve body solenoid wires (Fig. 8).

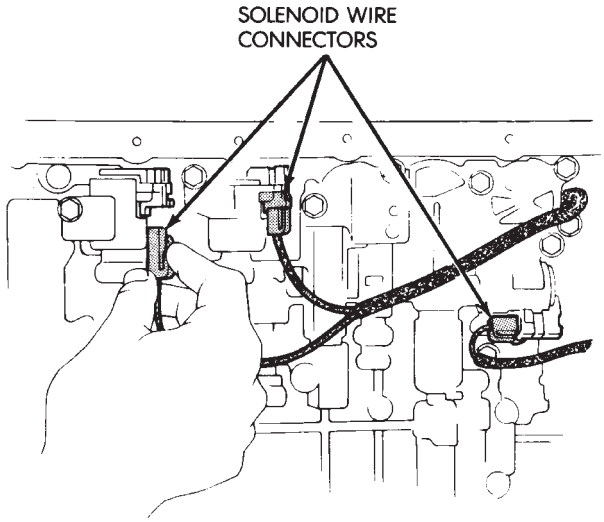

J8921-433

Fig. 8 Solenoid Wire Location

(14) Remove harness bracket bolt and remove harness and bracket Fig. 9).

(15) Remove valve body bolts (Fig. 10).

(16) Disconnect throttle cable from throttle cam (Fig. 11).

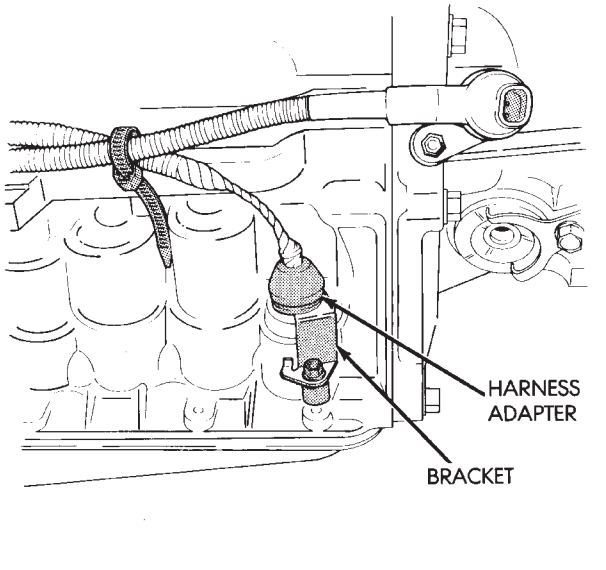

J8921-436

Fig. 9 Removing Bracket And Harness

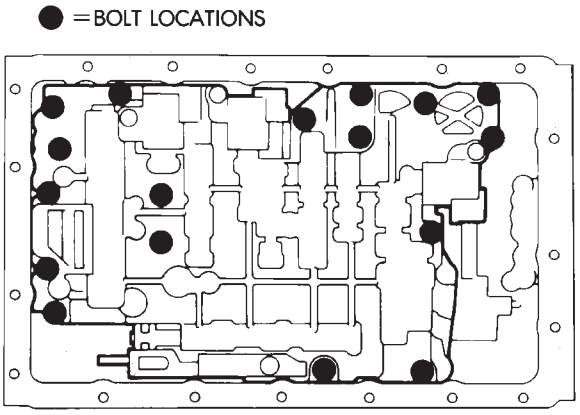

J8921-439

Fig. 10 Valve Body Bolt Locations

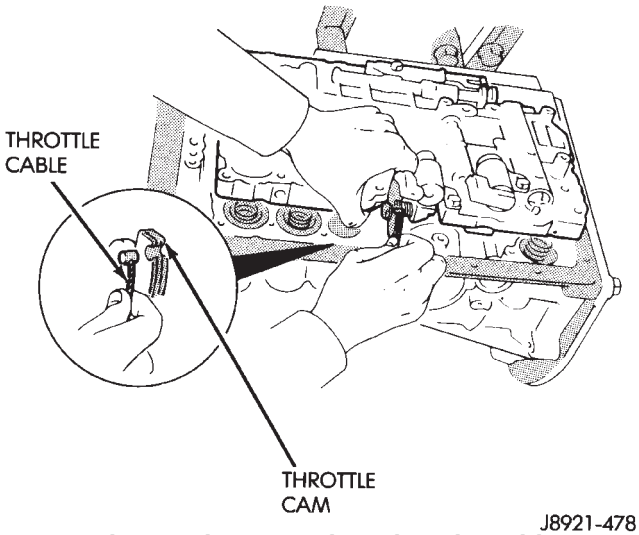

J8921-478

Fig. 11 Disconnecting Throttle Cable

(17) Remove valve body from case. Then remove accumulator springs, spacers and check ball and spring (Fig. 12).

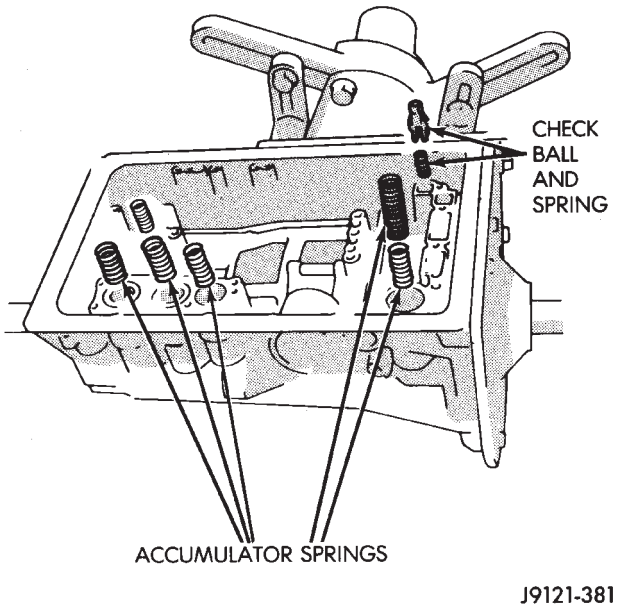

Fig. 12 Removing Accumulator Springs, Spacers And Check Ball

(18) Remove second brake and clutch accumulator pistons with compressed air (Fig. 13). Apply air pressure through feed port and ease the pistons out of the bore.

(19) Remove overdrive brake accumulator piston with compressed air (Fig. 13).

(20) Remove overdrive clutch accumulator piston with compressed air (Fig. 13).

(21) Remove throttle cable.

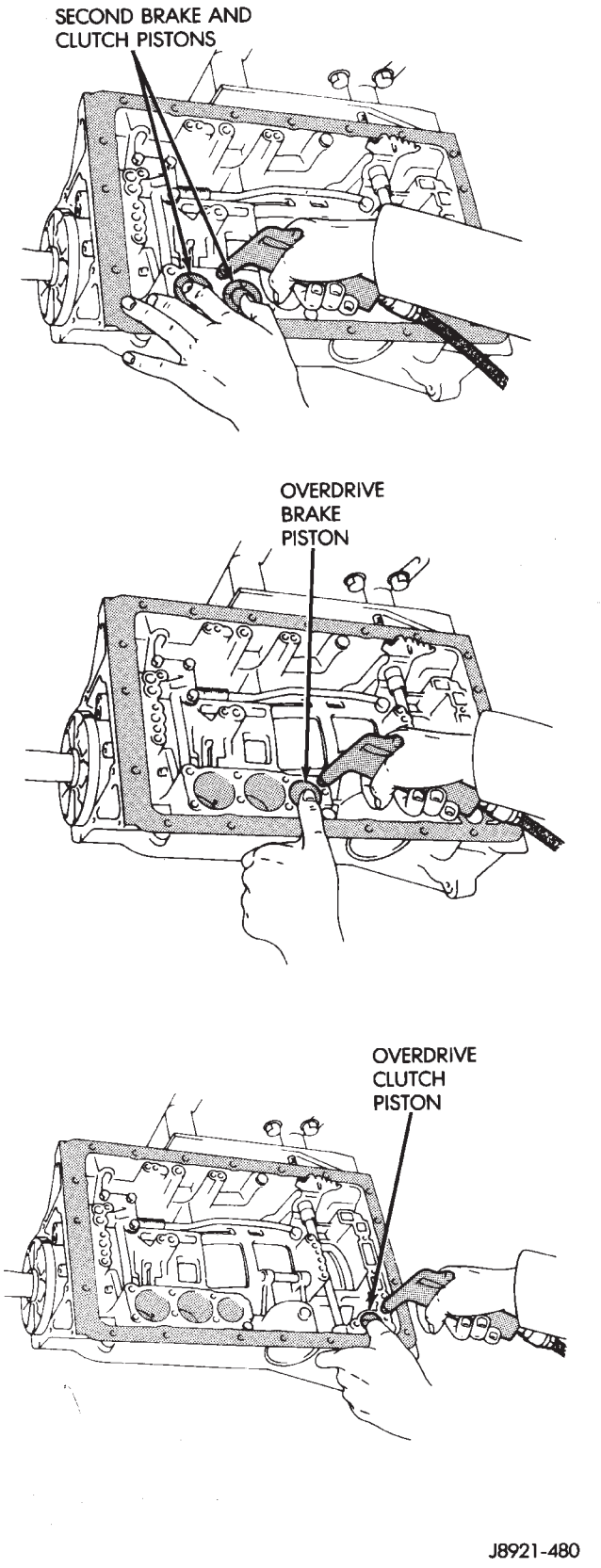

Fig. 13 Accumulator Piston Removal

(22) Remove oil pump bolts and remove pump with bridge-type Puller 7536 (Fig. 14).

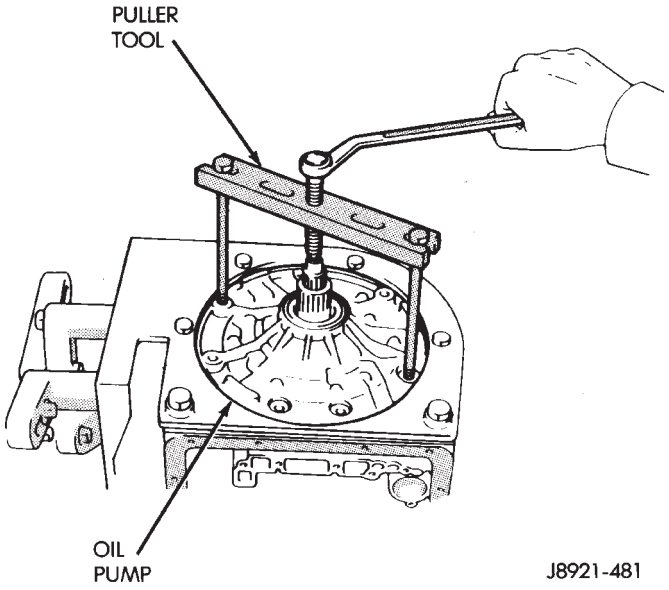

Fig. 14 Oil Pump Removal

(23) Remove race from oil pump (Fig. 15).

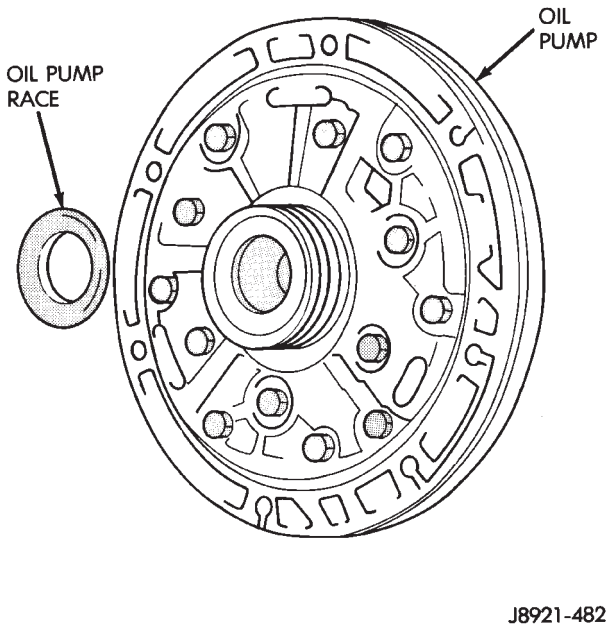

Fig. 15 Oil Pump Race Removal

(24) Remove overdrive planetary gear and clutch assembly (Fig. 16).

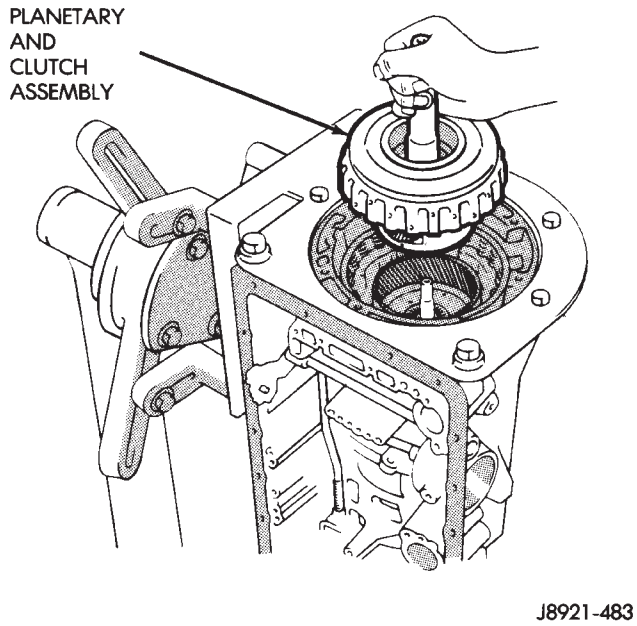

Fig. 16 Removing Overdrive Planetary And Clutch Assembly

(25) Remove race from overdrive planetary (Fig. 17).

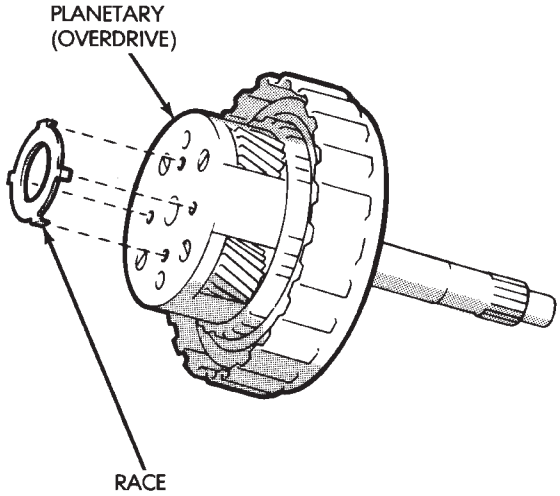

Fig. 17 Overdrive Planetary Race Removal

(26) Remove thrust bearing, race and overdrive planetary ring gear (Fig. 18).

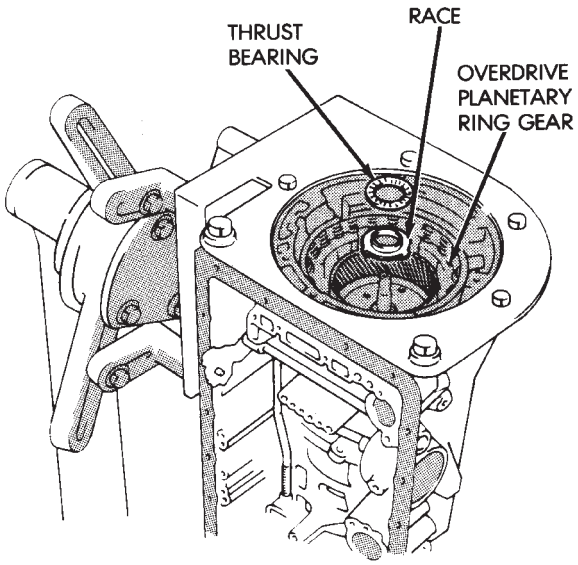

Fig. 18 Removing Bearing, Race And Planetary Ring Gear

(27) Measure stroke length of overdrive brake piston as follows:

(a) Mount dial indicator on case (Fig. 19).

(b) Mount Gauge Tool 7546 so it contacts piston (Fig. 19).

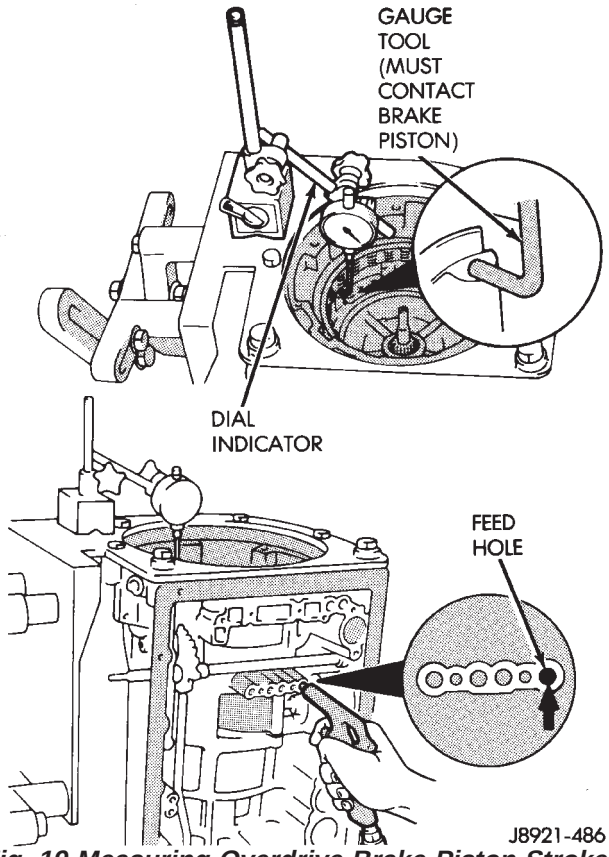

Fig. 19 Measuring Overdrive Brake Piston Stroke

(c) Apply 57-114 psi air pressure through piston apply port and note piston stroke on dial indicator. Stroke length should be: 1.40 - 1.70 mm (0.055 - 0.0699 in.).

(d) If stroke is not within limits, replace piston and retainer.

(28) Remove overdrive brake snap ring (Fig. 20).

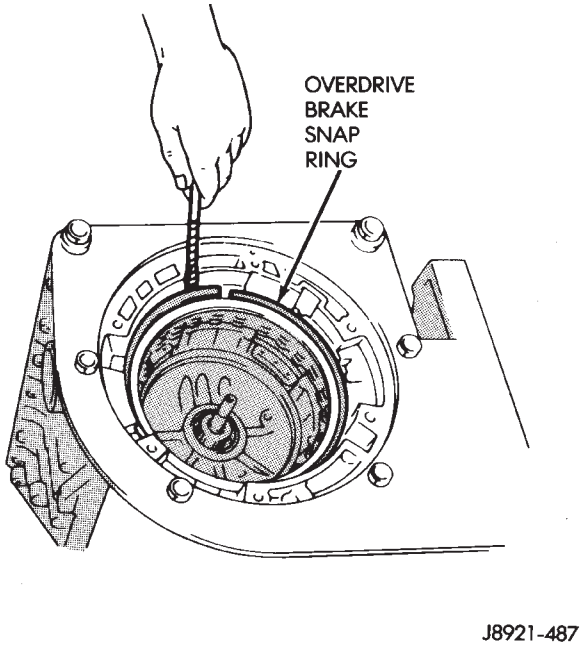

Fig. 20 Removing Overdrive Brake Snap Ring

(29) Remove overdrive brake clutch pack (Fig. 21). Then measure disc thickness with a micrometer. Minimum disc thickness is 1.84 mm (0.0724 in.). Replace clutch pack if necessary.

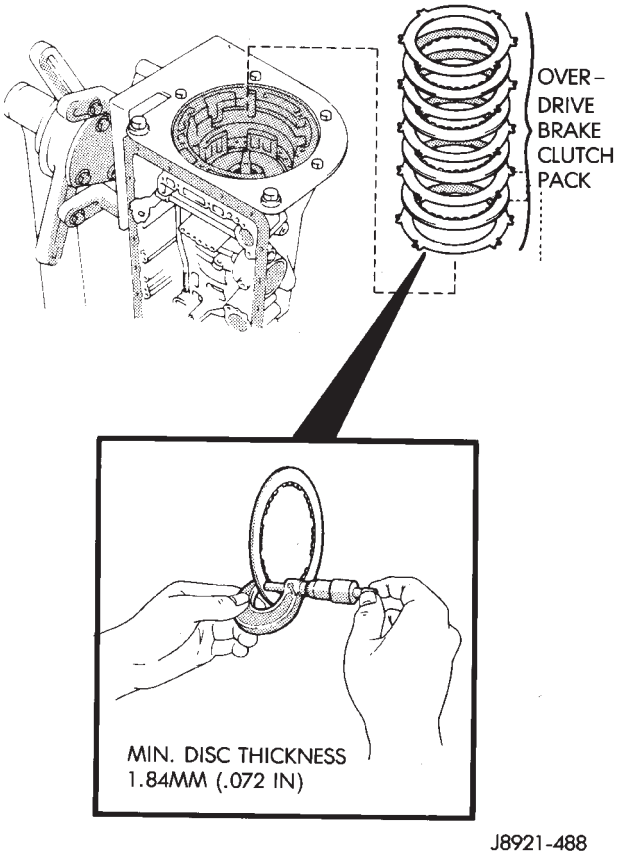

Fig. 21 Removing/Measuring Overdrive Brake Disc Thickness

(30) Remove overdrive support lower race and upper bearing and race assembly (Fig. 22).

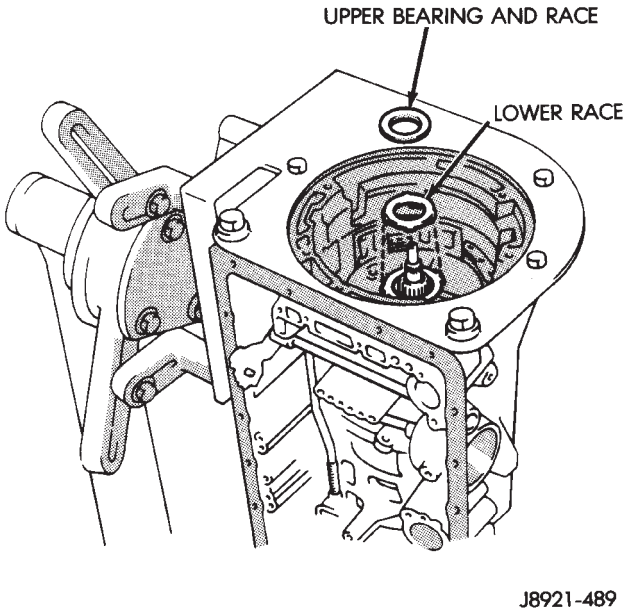

Fig. 22 Overdrive Support Bearing/Race Removal

(31) Remove overdrive support bolts (Fig. 23).

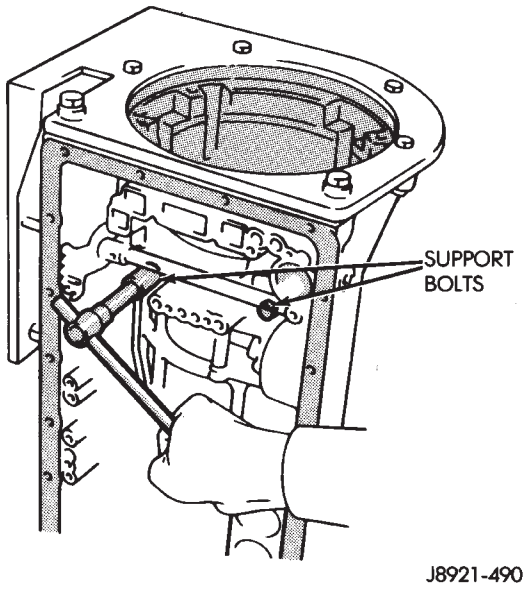

Fig. 23 Overdrive Support Bolt Removal

(32) Remove overdrive support snap ring with Snap Ring Plier Tool 7540 (Fig. 24).

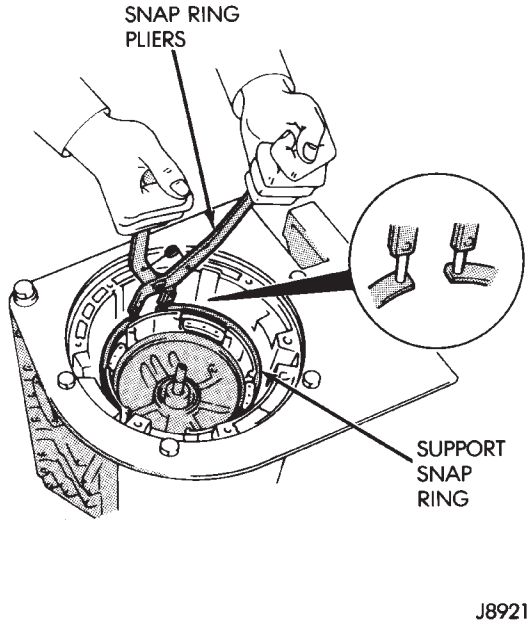

Fig. 24 Removing/Installing Overdrive Support Snap Ring

(33) Remove overdrive support (Fig. 25) with bridge-type Puller 7536.

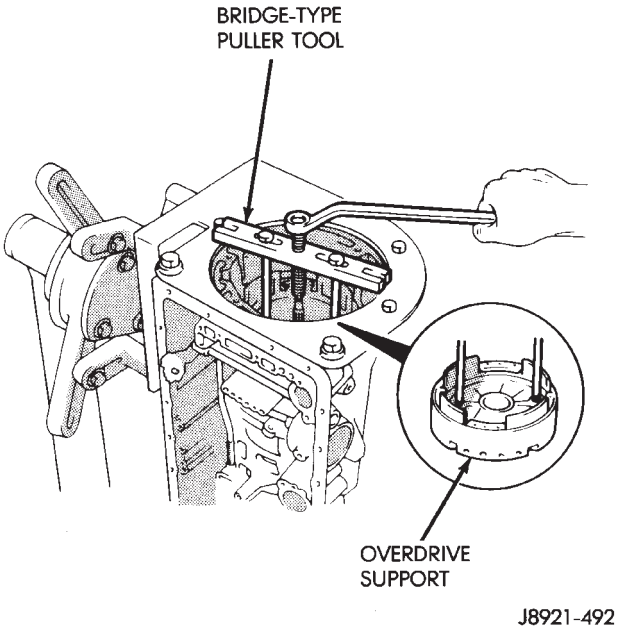

Fig. 25 Removing Overdrive Support

(34) Remove race from hub of overdrive support (Fig. 26).

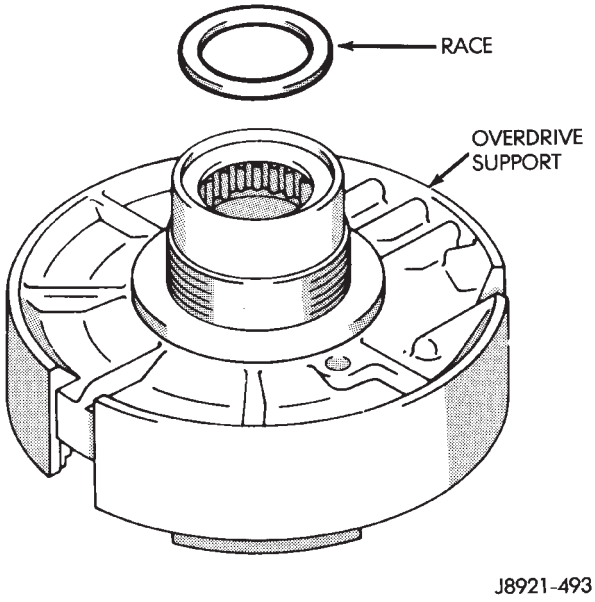

Fig. 26 Remove Overdrive Support Race

(35) Measure stroke length of second coast brake piston rod as follows:

(a) Make reference mark on piston rod (Fig. 27) as shown.

(b) Apply 57-114 psi air pressure through piston feed hole and check stroke length with Gauge Tool 7552 (Fig. 27).

(c) Stroke length should be 1.5 - 3.0 mm (0.059 - 0.118 in.).

(d) If stroke length is incorrect, install new piston rod and recheck stroke. If stroke is still incorrect, replace second coast brake band.

(e) Replacement piston rods are available in two different lengths which are: 71.4 mm (2.811 in.) and 72.9 mm (2.870 in.).

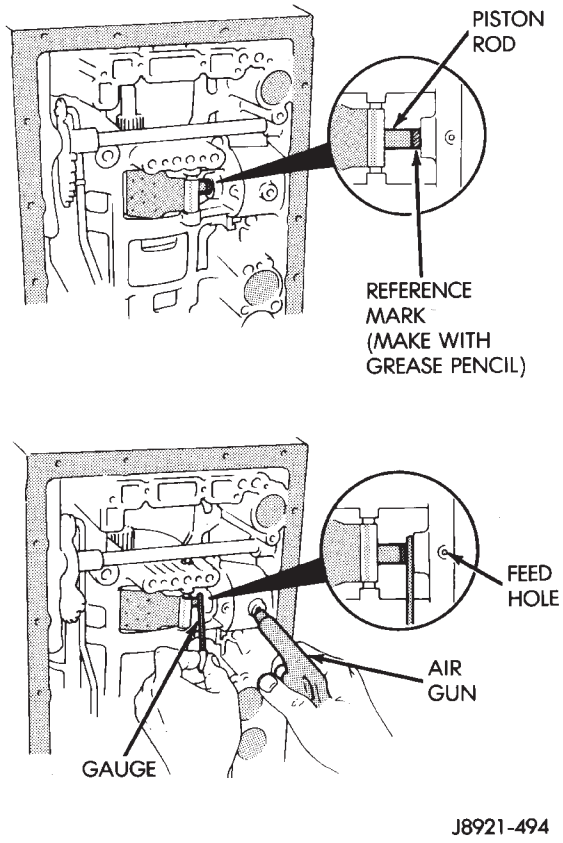

Fig. 27 Measuring Second Coast Brake Piston Rod Stroke

(36) Remove second coast brake piston snap ring with Snap Ring Plier Tool 7540. Then remove piston cover and piston assembly with compressed air applied through piston feed hole (Fig. 28).

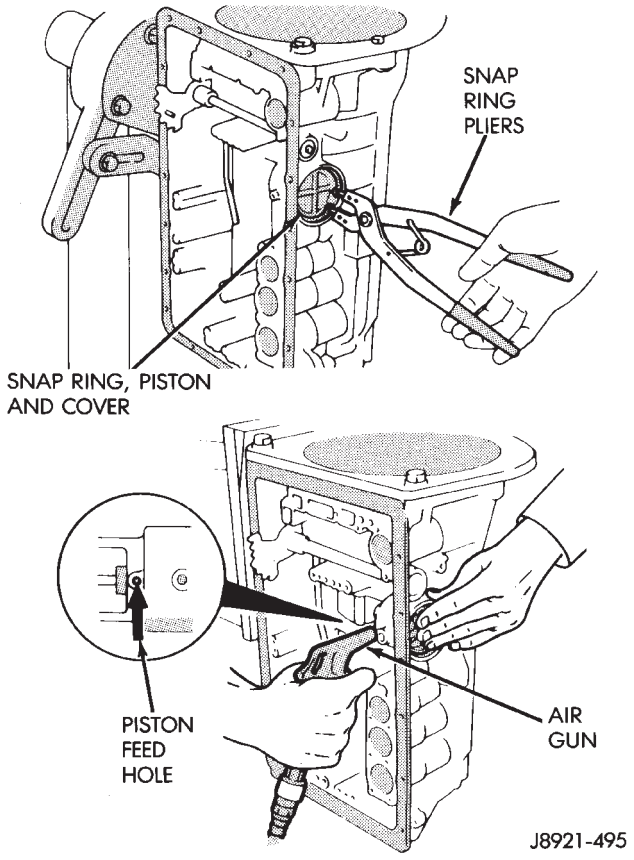

Fig. 28 Removing Second Coast Brake Cover And Piston

(37) Disassemble second coast brake piston (Fig. 29).

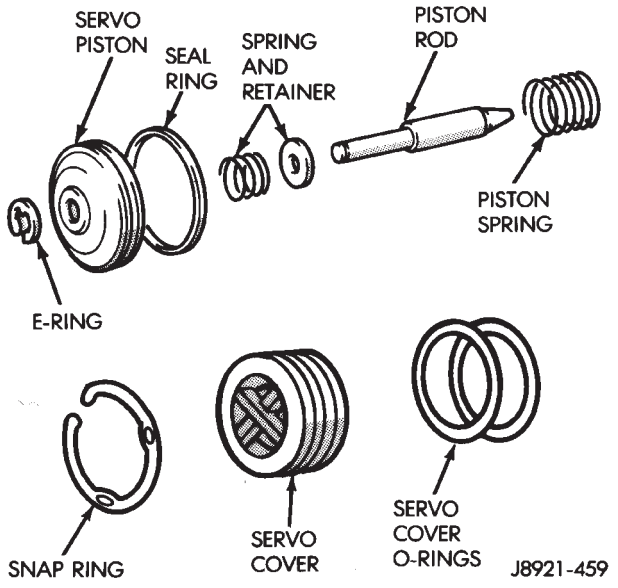

Fig. 29 Second Coast Brake Piston Components

(38) Remove direct and forward clutch assembly (Fig. 30).

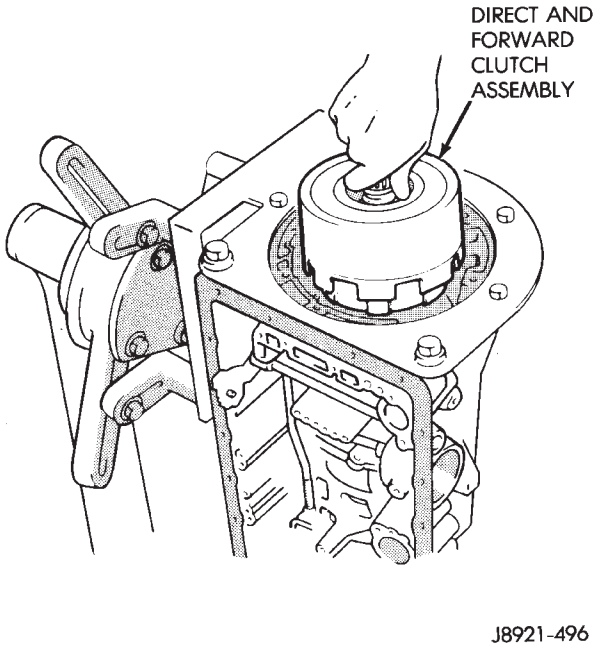

Fig. 30 Removing Direct And Forward Clutch Assembly

(39) Remove thrust bearing and race from clutch hub (Fig. 31).

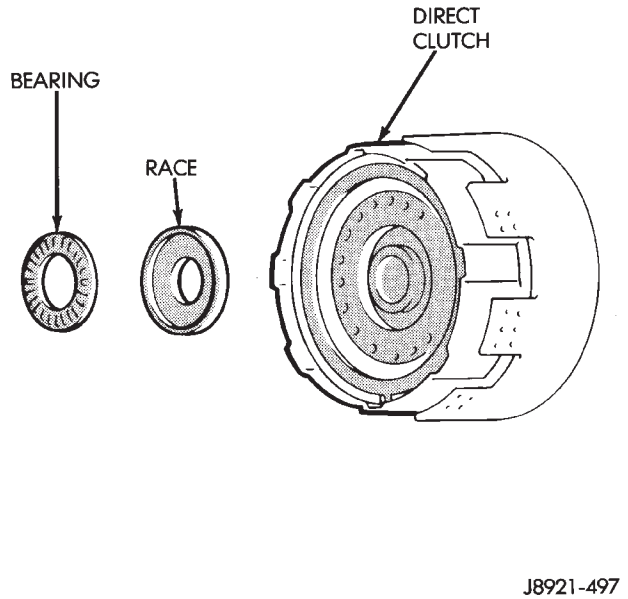

Fig. 31 Bearing And Race Removal From Clutch Hub

(40) Remove second coast brake band E-ring from band pin and remove brake band (Fig. 32).

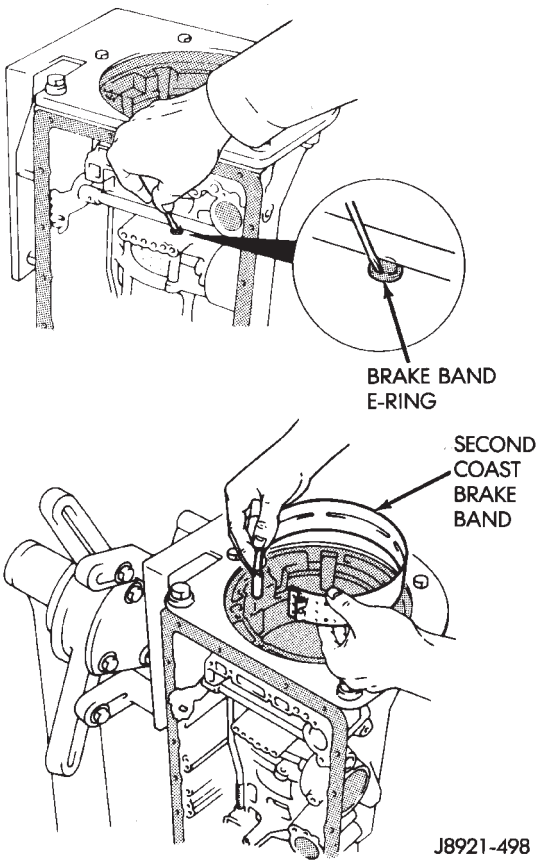

Fig. 32 Second Coast Brake Band Removal

(41) Remove front planetary ring gear front bearing race and remove front planetary ring gear (Fig. 33).

(42) Remove thrust bearing and rear race from ring gear (Fig. 34).

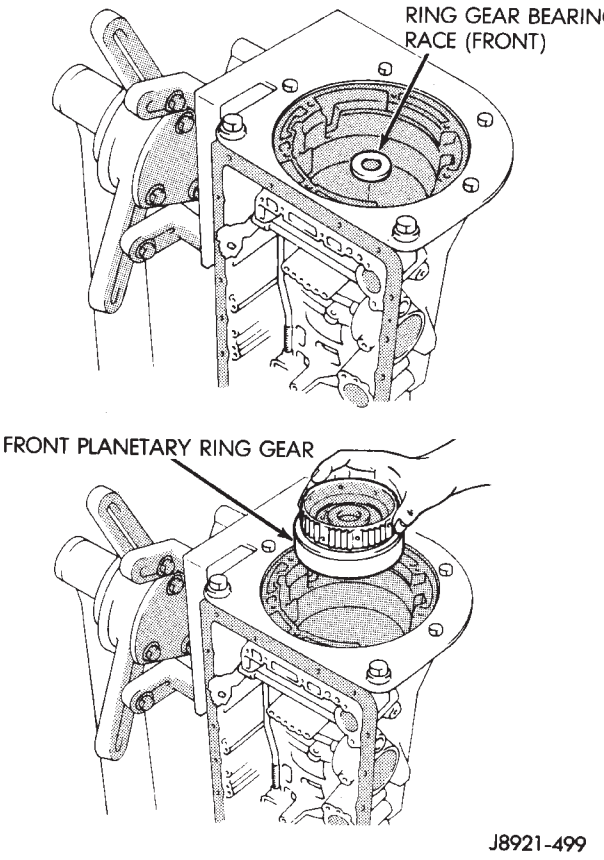

Fig. 33 Front Planetary Ring Gear Removal

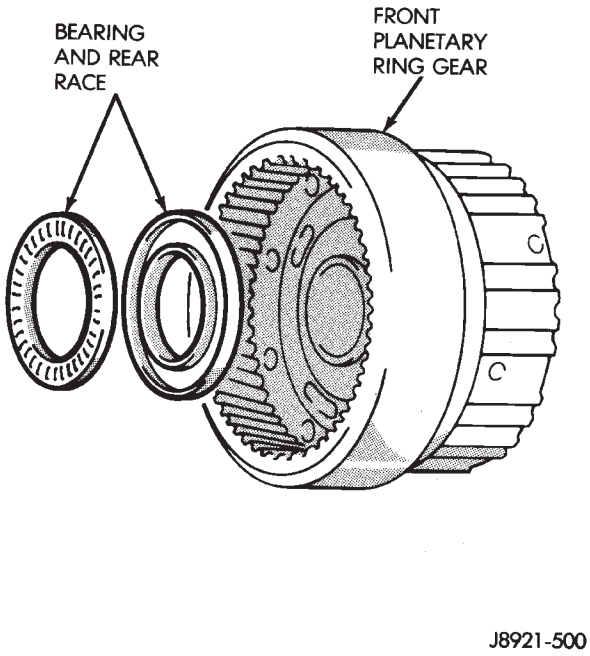

Fig. 34 Removing Ring Gear Bearing And Rear Race

(43) Remove planetary thrust race (Fig. 35).

(44) Relieve load on planetary snap ring as follows: Loosen transmission holding fixture. Turn transmission over and allow output shaft to support transmission weight. Place wood blocks under shaft to protect splines (Fig. 35).

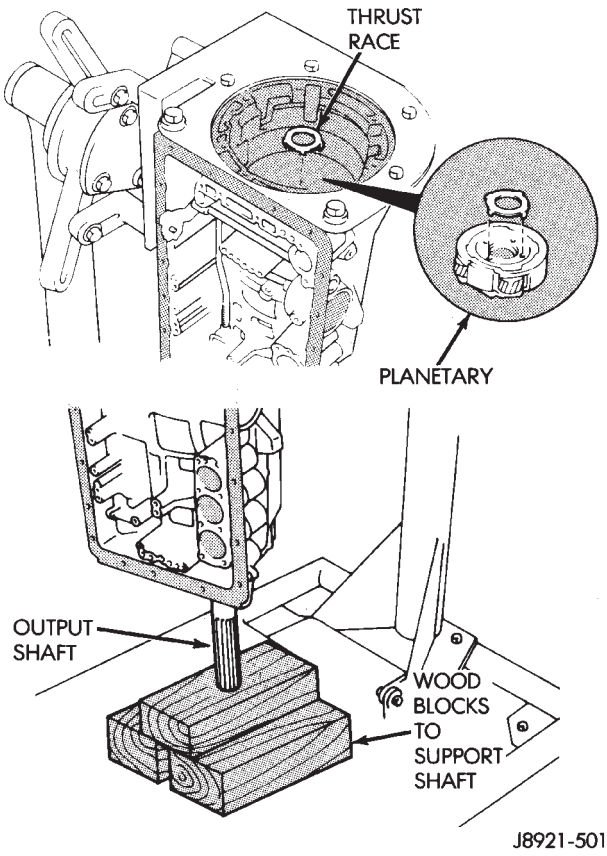

Fig. 35 Relieving Load On Planetary Snap Ring

(45) Remove planetary snap ring and remove planetary gear (Fig. 36).

(46) Remove sun gear, input drum and one-way clutch as assembly (Fig. 37).

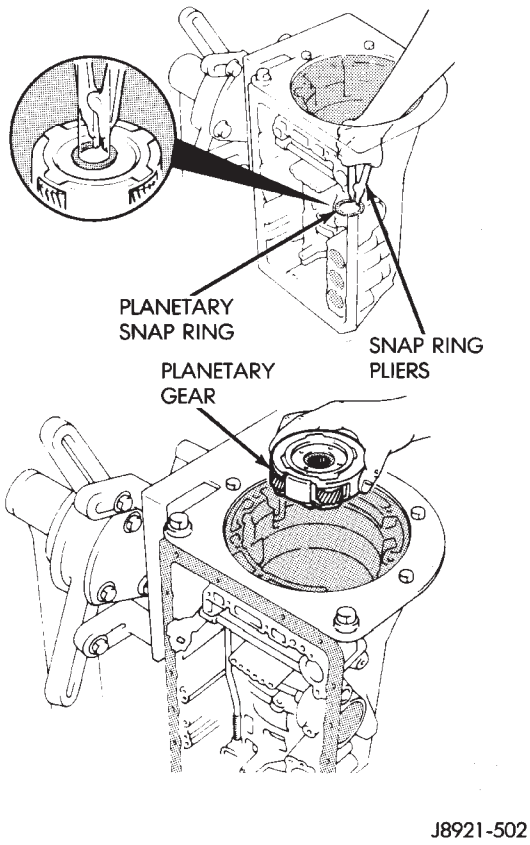

Fig. 36 Removing Planetary Snap Ring And Gear

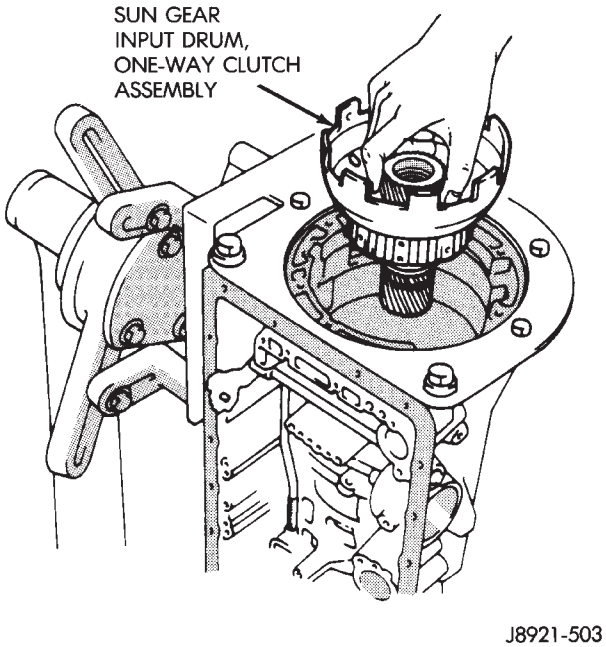

Fig. 37 Removing Sun Gear, Input Drum And One-Way Clutch

(47) Measure second brake clutch pack clearance (Fig. 38). Clearance should be 0.62 - 1.98 mm (0.0244 - 0.0780 in.). Replace discs if clearance is not within specifications.

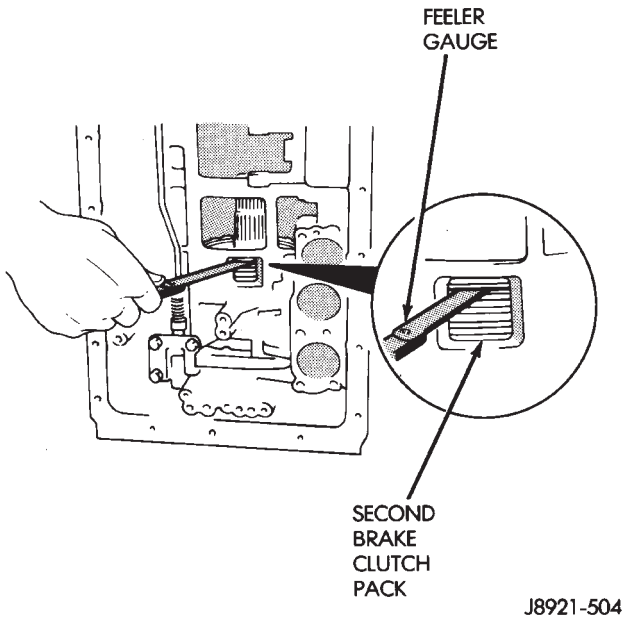

Fig. 38 Checking Second Brake Clutch Pack Clearance

(48) Remove second brake clutch pack snap ring (Fig. 39).

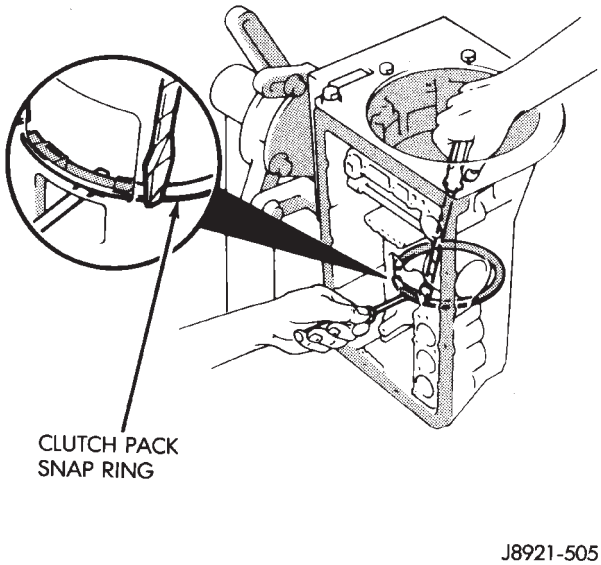

Fig. 39 Removing Second Brake Clutch Pack Snap Ring

(49) Remove second brake clutch pack (Fig. 40). Measure disc thickness with micrometer. Minimum thickness should be 1.84 mm (0.0724 in.). Replace discs if not within specifications.

(50) Remove bolts attaching park rod bracket to case. Then disconnect park rod from manual shaft lever and remove rod and bracket (Fig. 41).

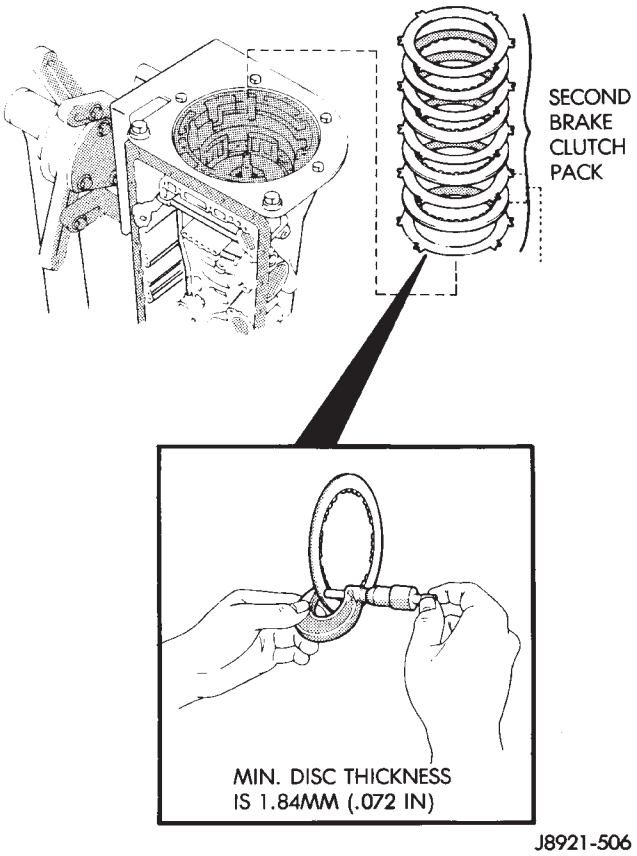

Fig. 40 Removing/Measuring Second Brake Clutch Disc Thickness

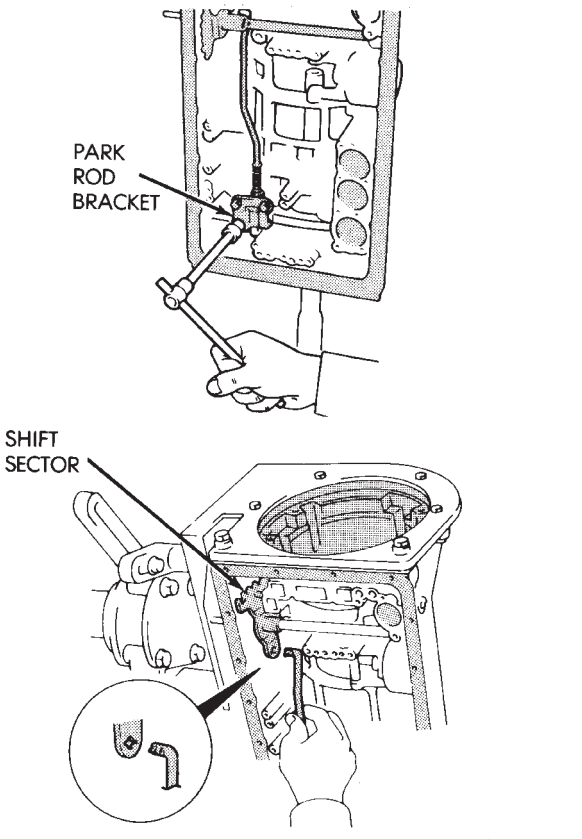

Fig. 41 Removing Park Rod And Bracket

(51) Remove park pawl spring, pin and pawl (Fig. 42).

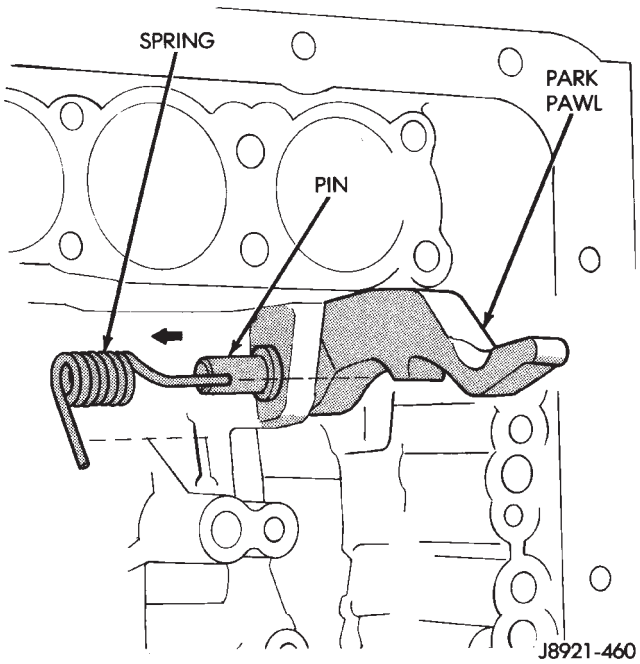

Fig. 42 Removing Park Pawl, Pin And Spring

(52) Measure clearance of first-reverse brake clutch pack (Fig. 43). Clearance should be: 0.70 - 1.2 mm (0.028 - 0.047 in.). Replace discs if clearance is not as specified.

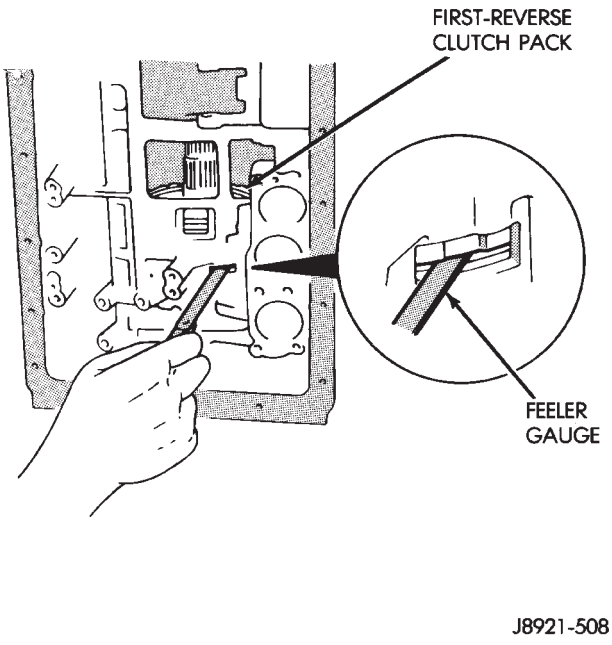

Fig. 43 Checking First-Reverse Brake Clutch Pack Clearance

(53) Remove second brake piston sleeve (Fig. 44). Cover remover tool with tape to avoid damaging case.

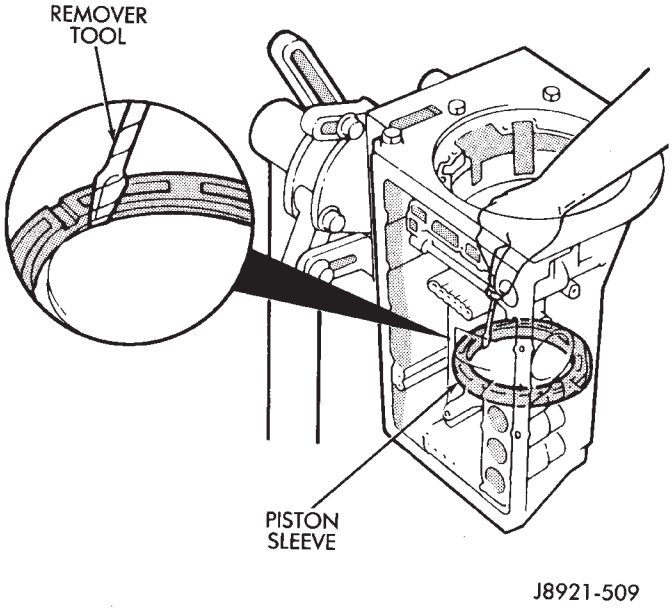

Fig. 44 Removing Second Brake Piston Sleeve

(54) Remove rear planetary gear, second brake drum and output shaft as an assembly (Fig. 45).

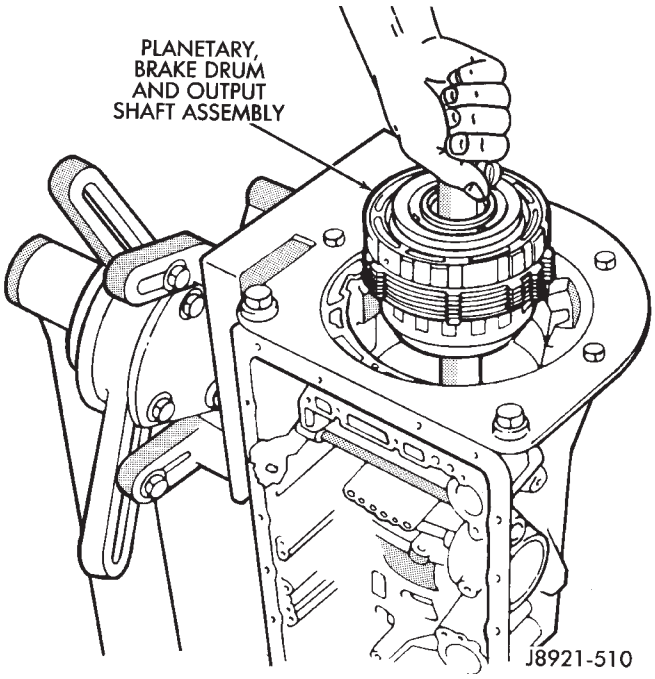

Fig. 45 Removing Rear Planetary, Second Brake Drum And Output Shaft

(55) Remove planetary and brake drum thrust bearing and race assembly (Fig. 46).

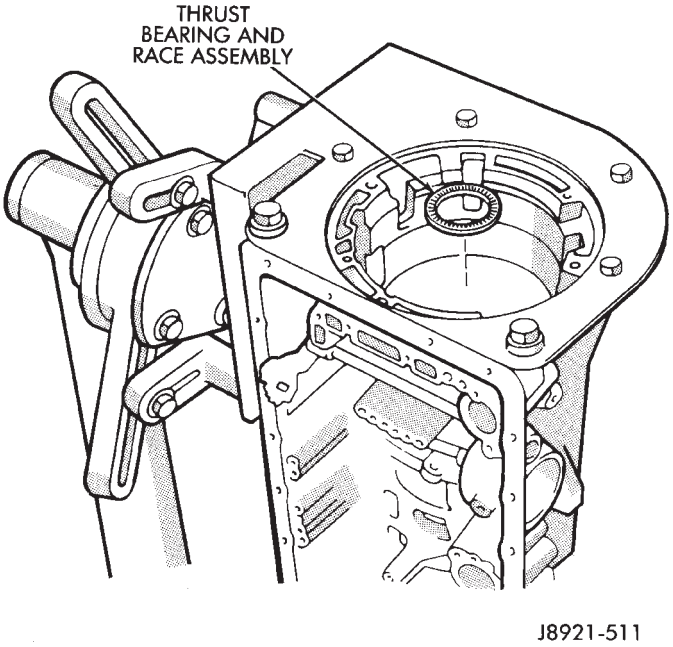

Fig. 46 Removing Planetary And Brake Drum Thrust Bearing And Race Assembly

(56) Remove second brake drum gasket from case with gasket scraper or screwdriver (Fig. 47). Retain tube shaped gasket if condition is OK.

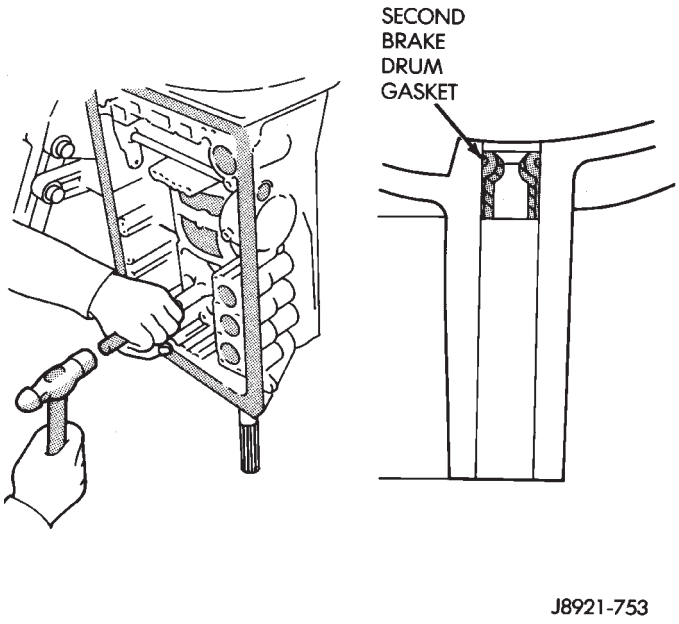

Fig. 47 Removing Brake Drum Gasket

(57) Measure inside diameter of transmission case rear bushing with bore gauge or inside micrometer (Fig. 48). Maximum allowable diameter is 38.18 mm (1.5031 in.). **Replace transmission case if bushing I.D. is greater than specified. Bushing is not serviceable.**

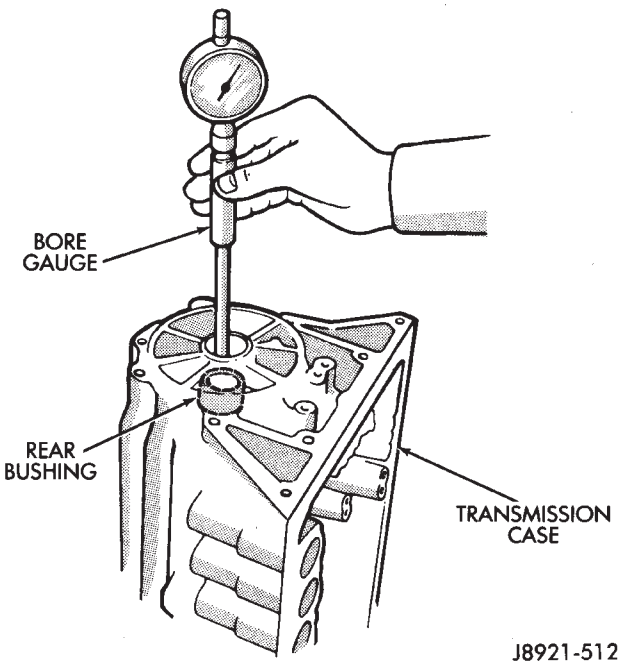

Fig. 48 Checking Rear Bushing Inside Diameter

CLEANING AND INSPECTION

Clean the transmission components with solvent and dry them with compressed air only. Do not use shop towels or rags.

Blow compressed air through all oil feed passages and channels to be sure they are clear. Inspect the transmission components for wear and damage. Replace components that are damaged or worn beyond the limits specified in the individual overhaul procedures.

Replace all O-rings, gaskets and seals. These components are not reusable. Also replace any snap ring that is distorted or damaged.

During overhaul assembly operations, lubricate the transmission components with Jeep or Mopar Mercon™ automatic transmission fluid or petroleum jelly as indicated. Petroleum jelly should be used to prelubricate thrust bearings, washers and races. It can also be used to hold parts in position during assembly.

Soak replacement clutch and brake pack components in transmission fluid for at least 30 minutes before installation.

MANUAL VALVE SHAFT OVERHAUL

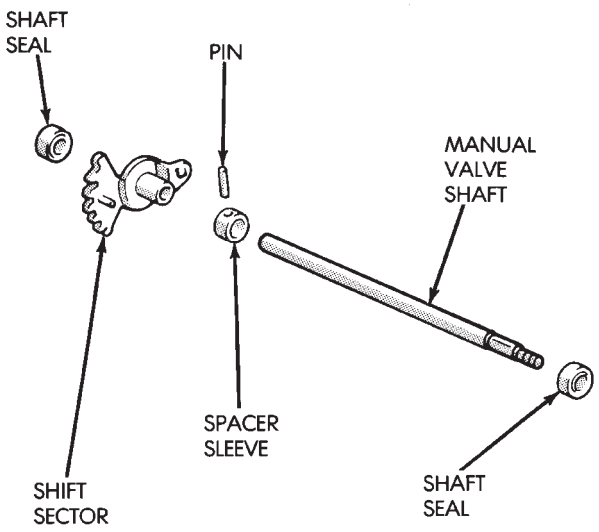

Fig. 1 Manual Valve Shaft Components

(1) Cut shaft spacer sleeve in half with chisel and remove it from lever and shaft (Fig. 2).

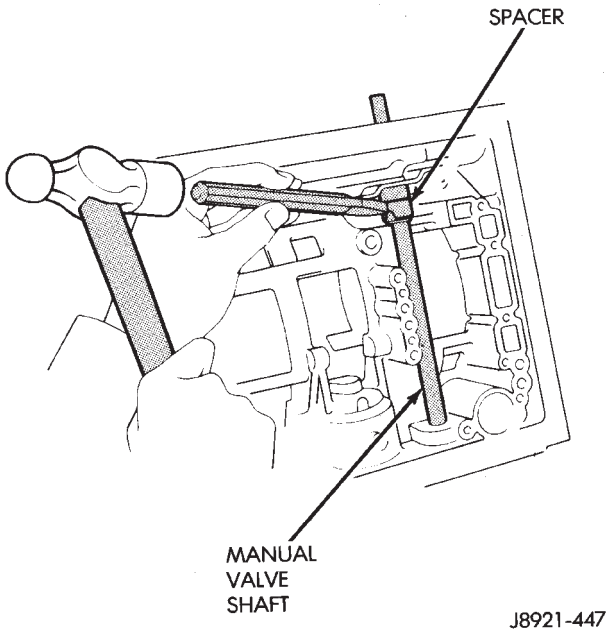

Fig. 2 Cutting Shaft Spacer Sleeve

(2) Remove shift sector retaining pin with pin punch (Fig. 3).

(3) Pull shaft out of case and remove manual lever.

(4) Carefully pry shaft seals from case.

(5) Lubricate new seals with petroleum jelly and install them in case (Fig. 4).

(6) Install new spacer sleeve on shift sector (Fig. 5).

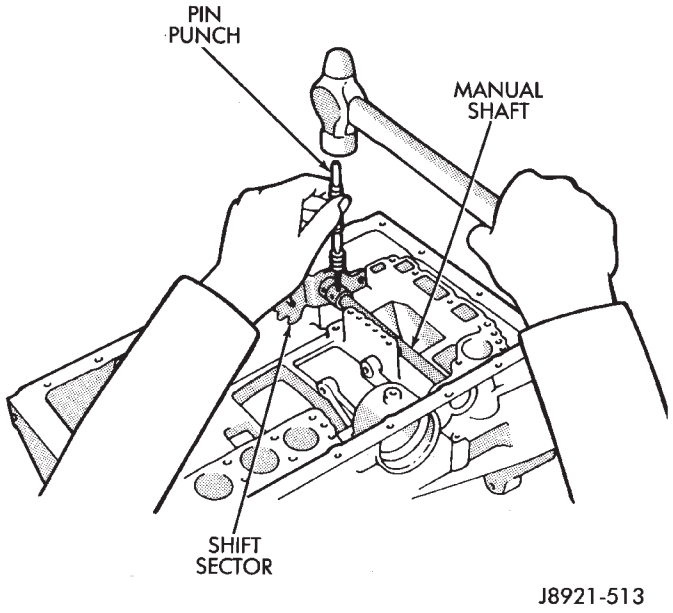

Fig. 3 Removing/Installing Sector Retaining Pin

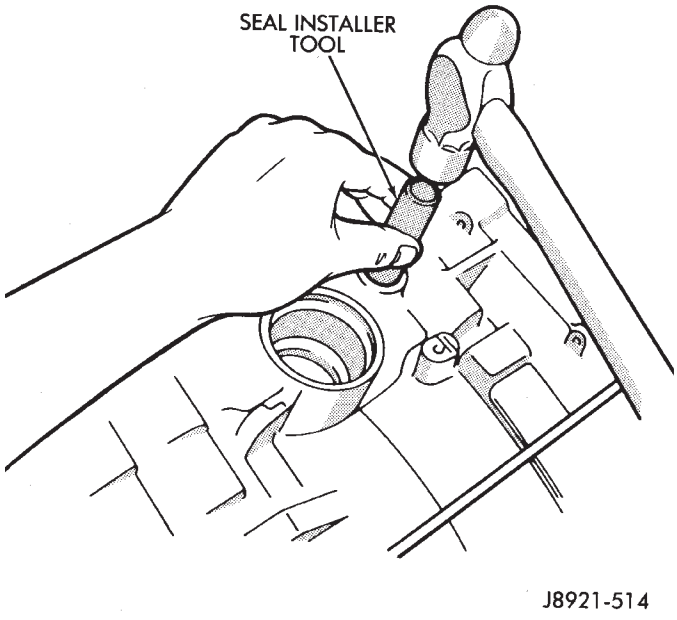

Fig. 4 Installing Manual Shaft Seals

(7) Install sector and sleeve on shaft and install shaft in case.

(8) Align sector and sleeve and install new retaining pin.

(9) Align notch in sleeve with depression in sector and stake sleeve in two places. Be sure lever and shaft rotate smoothly.

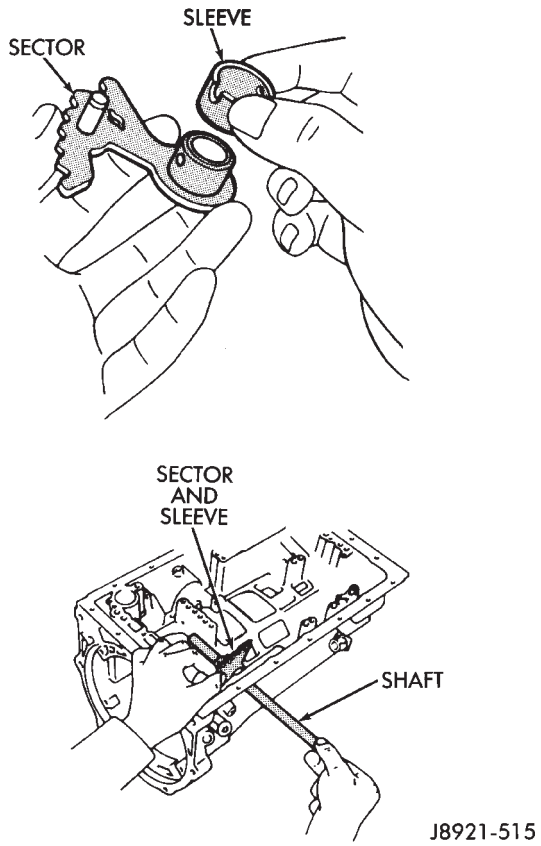

Fig. 5 Installing Manual Shaft And Sector

OIL PUMP OVERHAUL

(1) Remove pump body O-ring (Fig. 1).

(2) Remove pump seal rings (Fig. 1).

(3) Remove bolts attaching stator shaft to pump body and separate components.

(4) Remove drive gear and driven gear from pump body (Fig. 1).

(5) Measure inside diameter of pump body bushing with bore gauge or inside micrometer (Fig. 2). Diameter should be maximum of 38.19 mm (1.5035 in.). Replace pump body if bushing I.D. is greater than specified.

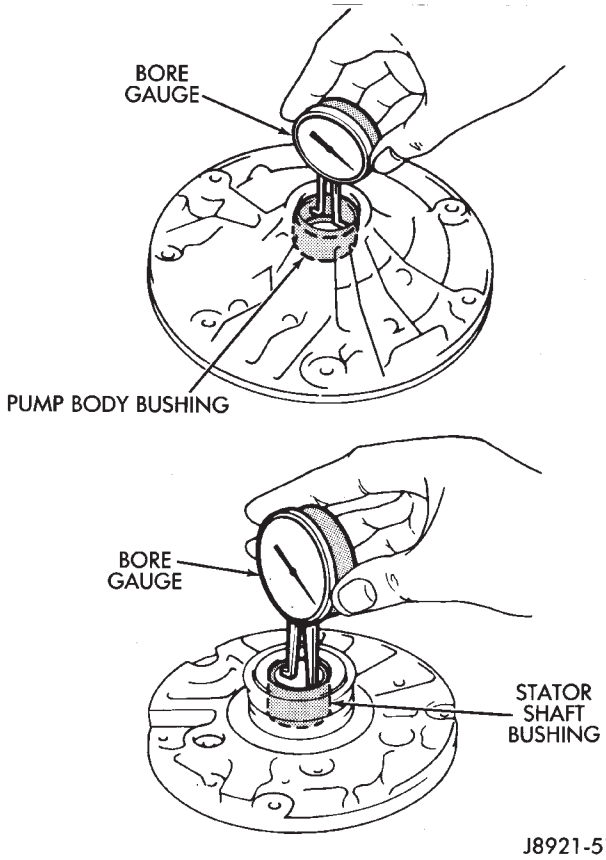

Fig. 2 Checking Pump/Stator Shaft Bushings

(6) Measure inside diameter of stator shaft bushing (Fig. 2). Take measurements at front and rear of bushing. Diameter should be maximum of 21.58 mm (0.08496 in.) at front and 27.08 mm (1.0661 in.) at

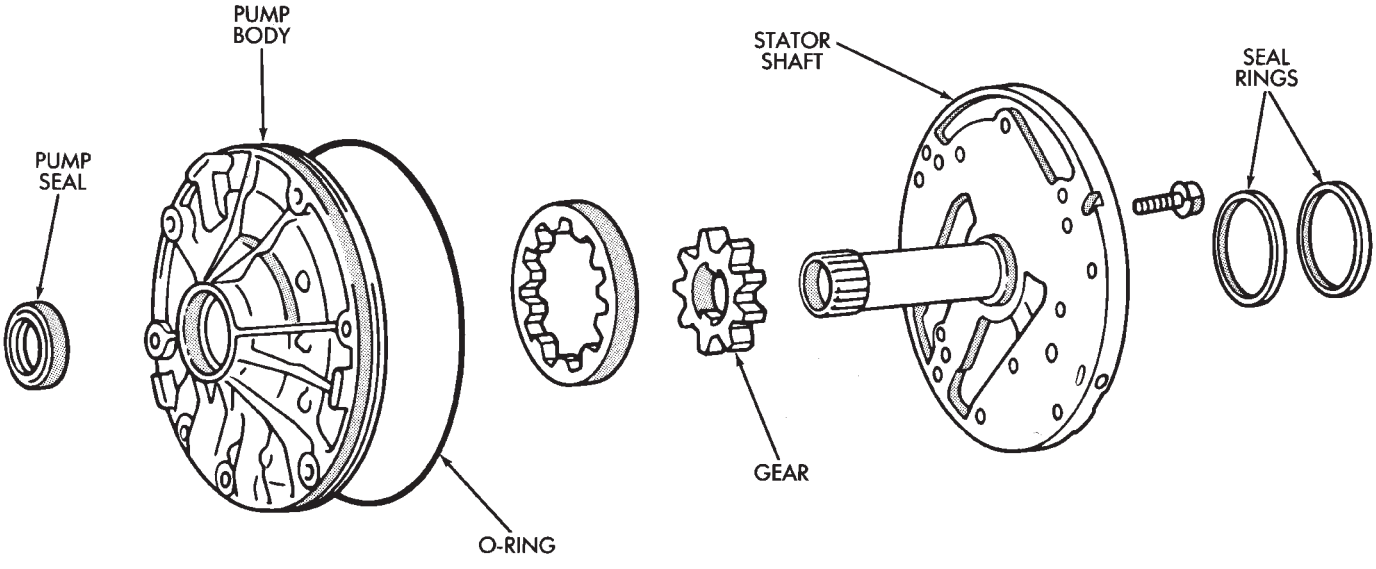

Fig. 1 Oil Pump Components

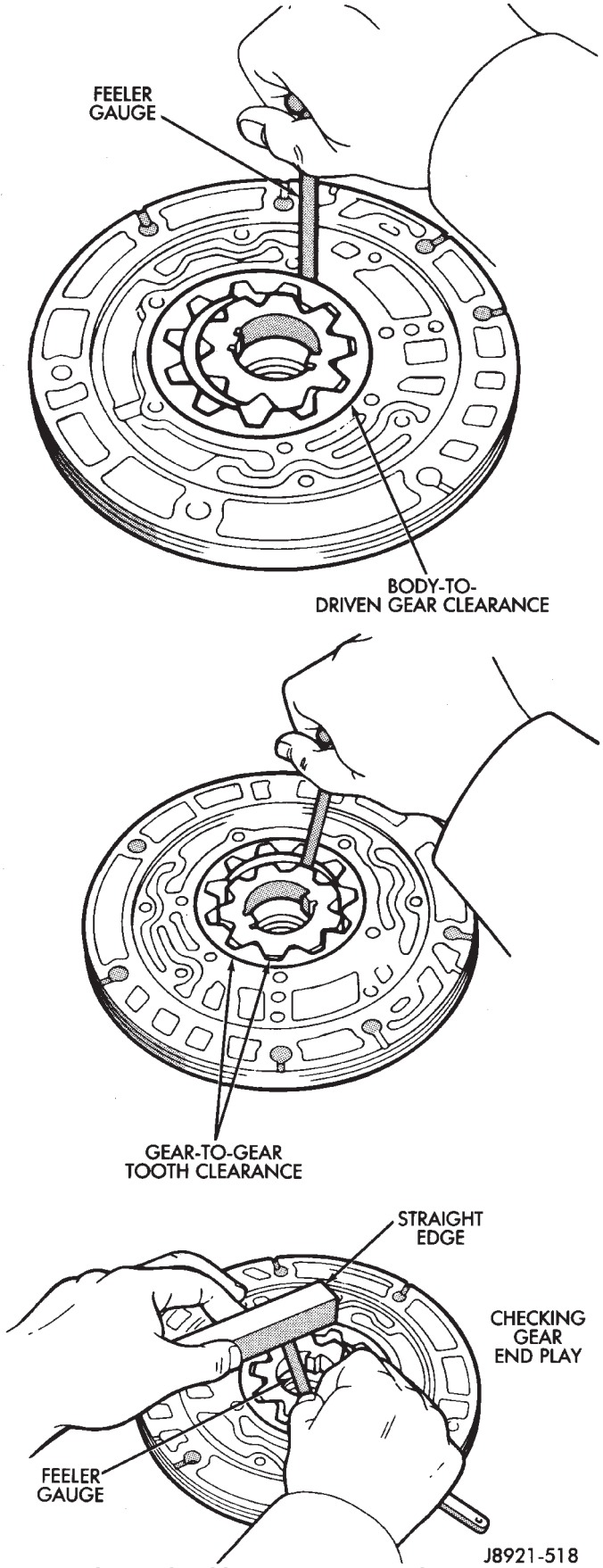

Fig. 3 Checking Pump Gear Clearances

rear. Replace stator shaft if bushing diameter is greater than specified.

(7) Measure oil pump clearances (Fig. 3).

- Clearance between pump driven gear and pump body should be maximum of 0.3 mm (0.012 in).
- Clearance between tips of pump gear teeth should be maximum of 0.3 mm (0.012 in).
- Clearance between rear surface of pump housing and pump gears should be maximum of 0.1 mm (0.004 in.).

(8) Replace pump body and gears if any clearance is greater than specified.

(9) Remove old pump seal. Install new seal with Seal Installer 7549 (Fig. 4).

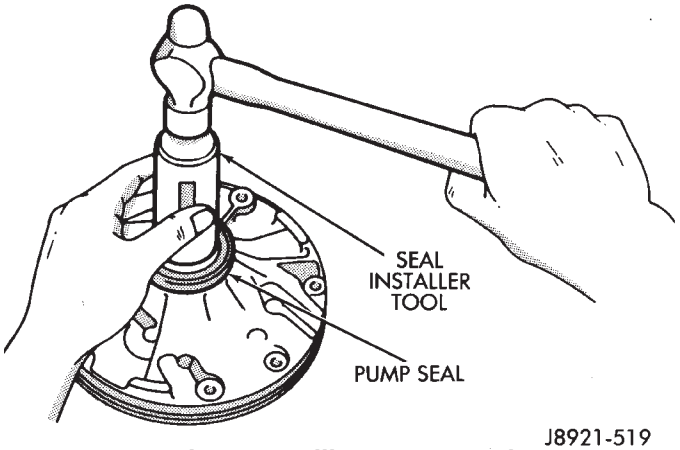

Fig. 4 Installing Pump Seal

(10) Lubricate and install gears in pump body.

(11) Assemble stator shaft and pump body. Tighten shaft-to-body bolts to 10 N·m (7 ft. lbs.) torque.

(12) Install new O-ring on pump body and new seal rings on stator shaft.

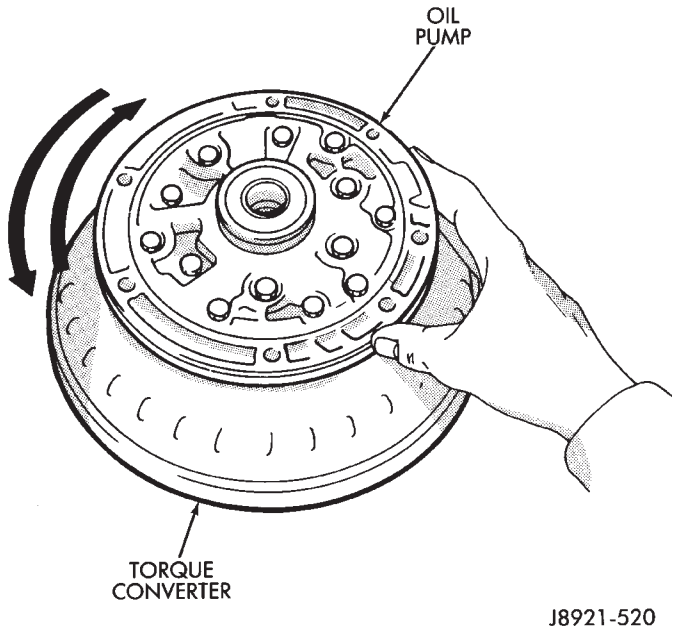

Fig. 5 Checking Pump Gear Rotation

(13) Install pump in torque converter and check pump gear rotation. Gears must rotate smoothly when turned clockwise and counterclockwise.

(14) Lubricate pump O-ring and seal rings with petroleum jelly.

OVERDRIVE PLANETARY GEAR AND CLUTCH OVERHAUL

GEAR AND CLUTCH DISASSEMBLY

(1) Check operation of one-way clutch in clutch drum. Hold drum and turn planetary shaft clockwise and counterclockwise. Shaft should turn clockwise freely but lock when turned counterclockwise. Replace one-way clutch if necessary.

(2) Replace overdrive brake clutch pack if discs are worn below thickness of 1.84 mm (0.0724 in.). This is clutch pack that fits on clutch drum and in case.

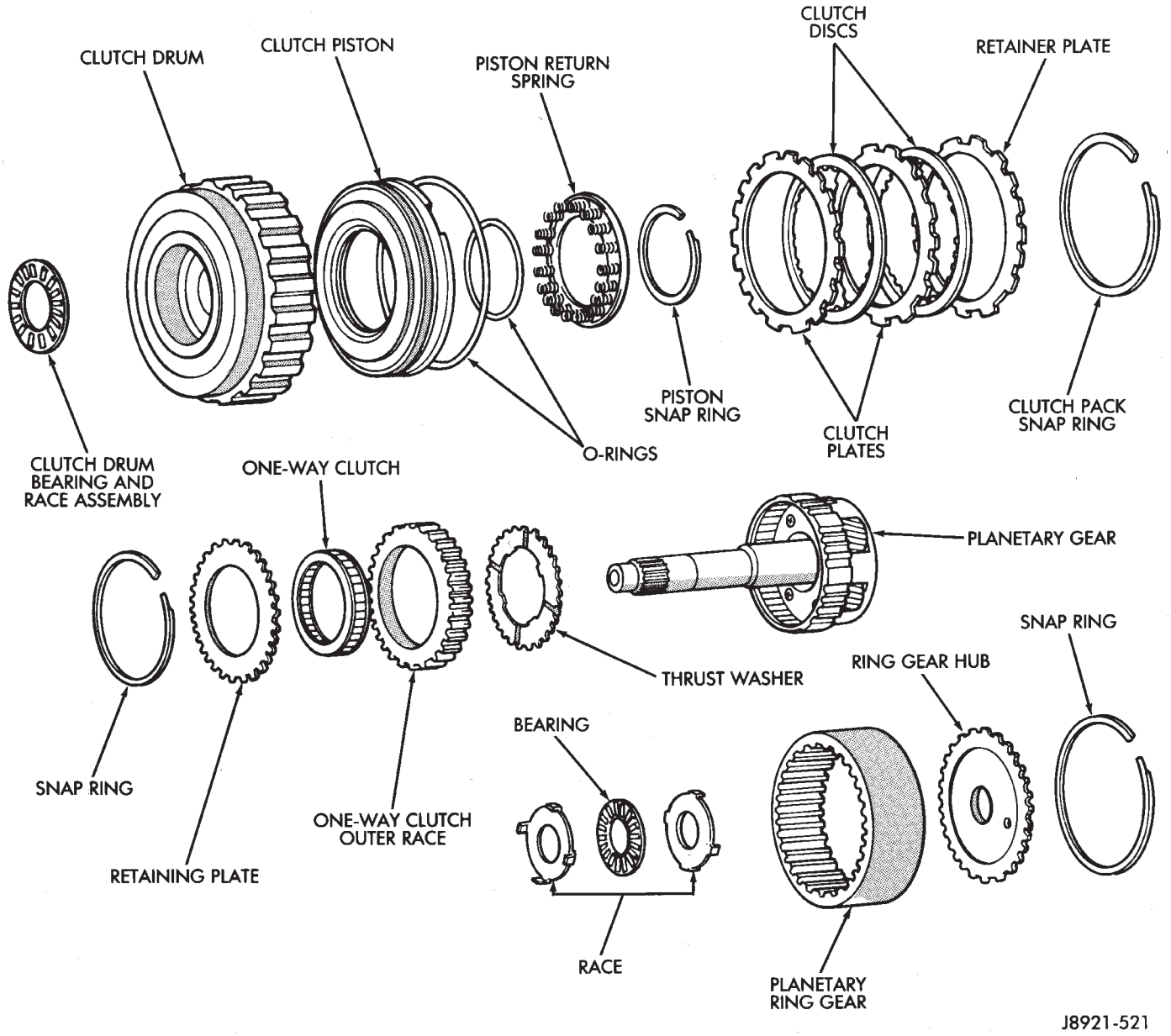

Fig. 1 Overdrive Planetary Gear And Clutch Components

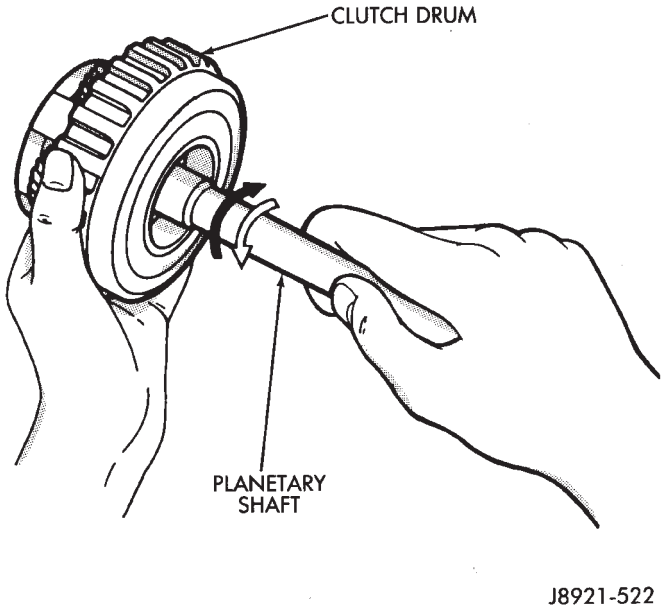

Fig. 2 Checking One-Way Clutch

(3) Remove overdrive clutch from planetary gear (Fig. 3).

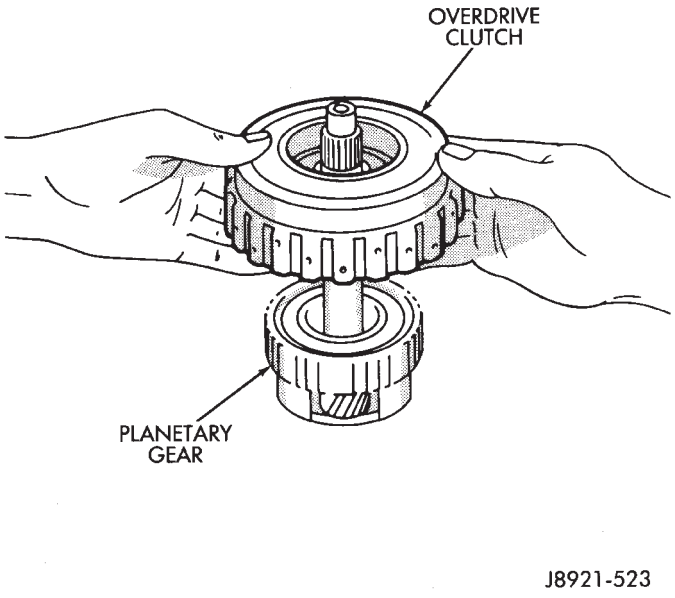

Fig. 3 Removing Overdrive Clutch From Gear

(4) Remove thrust bearing and race assembly from clutch drum (Fig. 4).

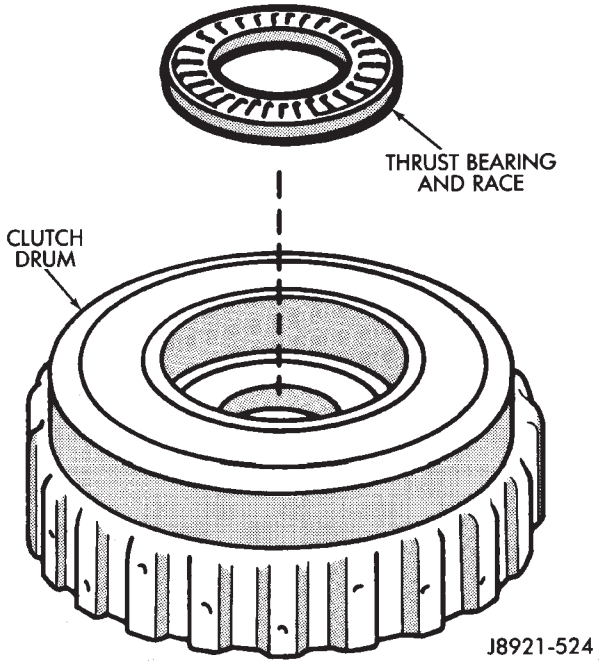

Fig. 4 Removing Clutch Drum Bearing And Race

(5) Measure stroke length of clutch piston as follows:

(a) Mount oil pump on torque converter. Then mount clutch on oil pump (Fig. 5).

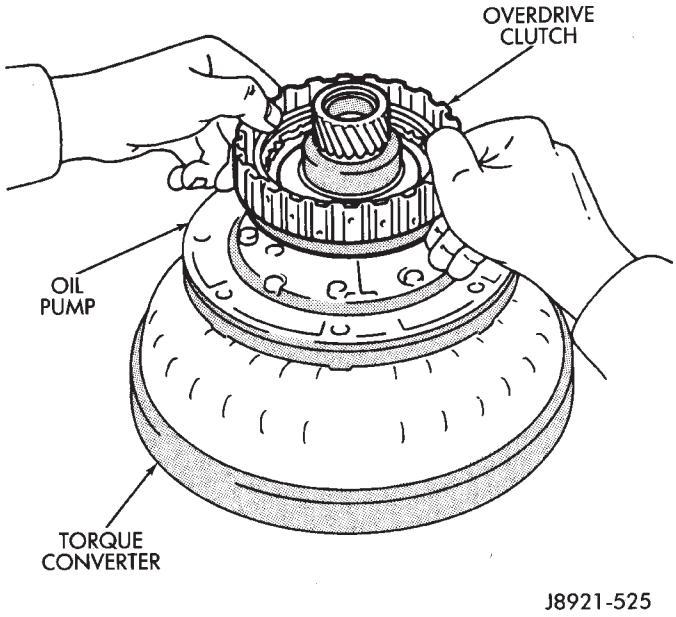

Fig. 5 Assembling Converter, Pump And Clutch For Test

(b) Mount dial indicator on clutch and position indicator stylus on clutch piston (Fig. 6).

(c) Apply compressed air through clutch feed hole in oil pump and note piston stroke length. Stroke length should be 1.85 - 2.15 mm (0.0728 - 0.0846 in.).

(6) Replace clutch pack if stroke length is incorrect.

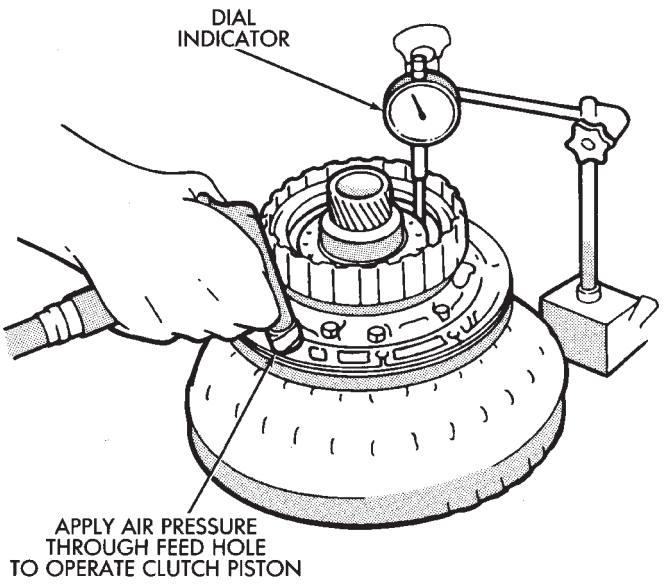

Fig. 6 Checking Overdrive Clutch Piston Stroke

(7) Remove clutch pack snap ring and remove the clutch pack.

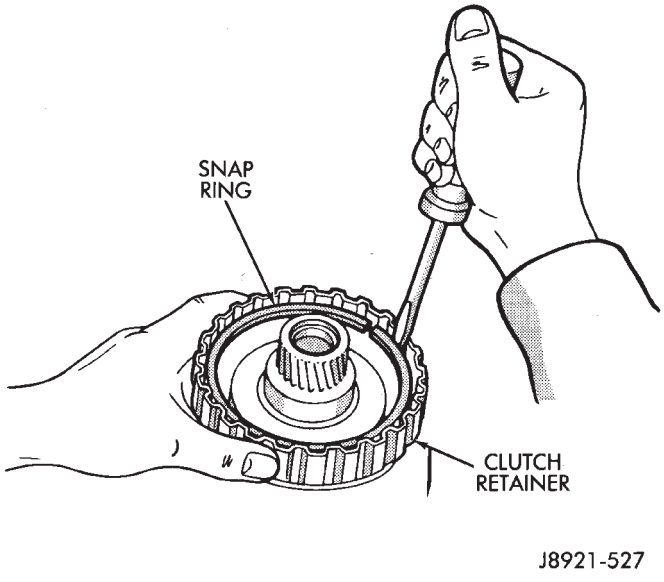

Fig. 7 Removing Clutch Pack Snap Ring

(8) Compress piston return spring with Tool 7538 (Fig. 8). Remove snap ring and remove compressor tool.

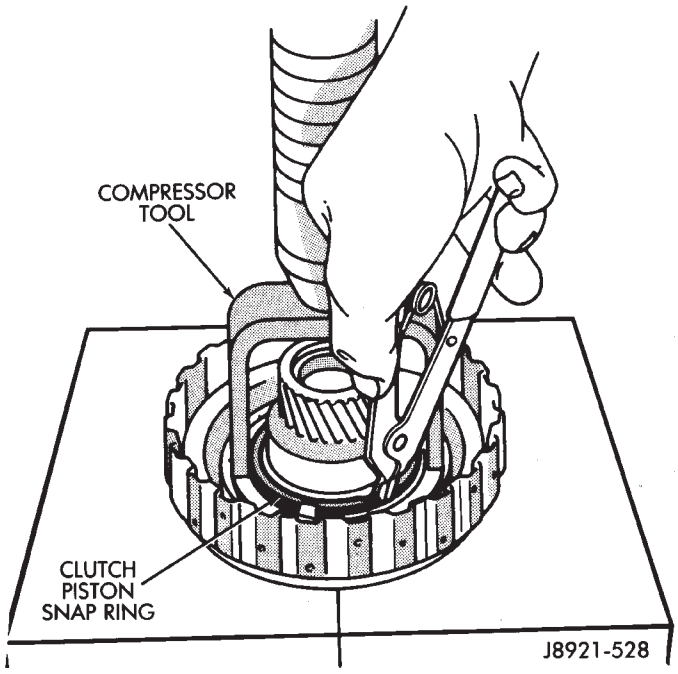

Fig. 8 Removing Clutch Piston Snap Ring

(9) Remove compressor tool and piston return springs.

(10) Mount oil pump on converter. Then mount clutch on oil pump (Fig. 9).

(11) Hold clutch piston by hand and apply compressed air through oil pump feed hole to ease piston out (Fig. 9). Apply only enough air pressure to remove piston.

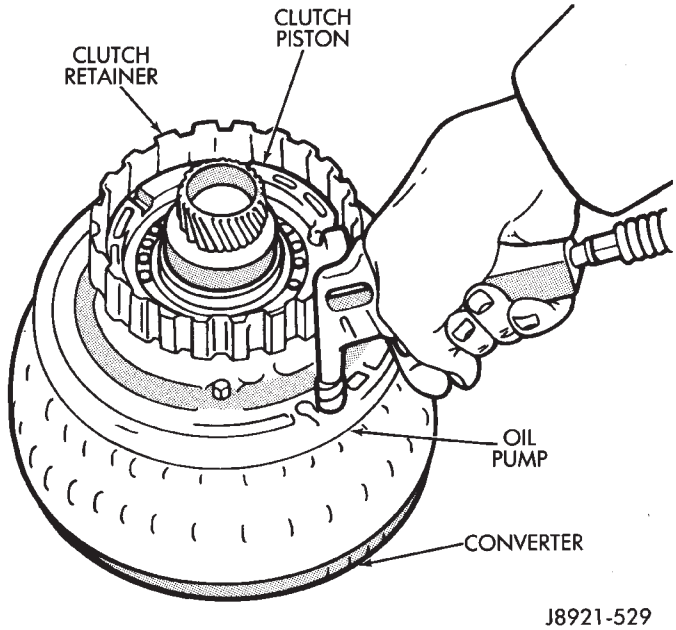

Fig. 9 Removing Overdrive Clutch Piston

(12) Remove bearing and race from ring gear (Fig. 10).

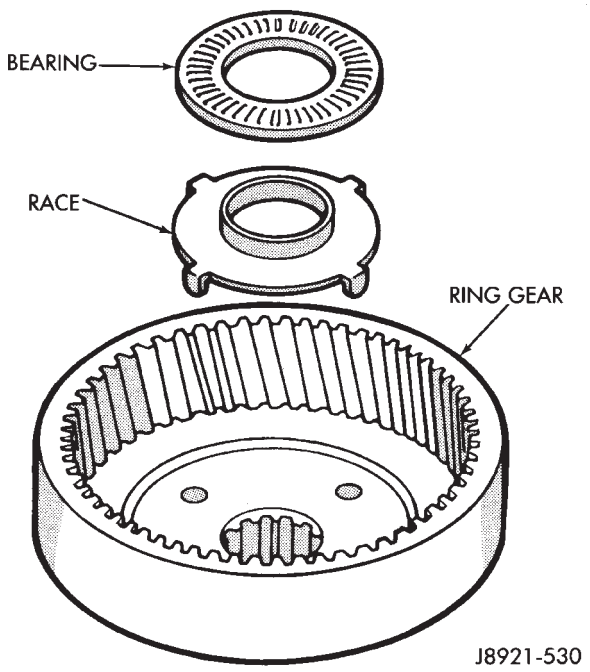

Fig. 10 Removing Ring Gear Bearing And Race

(13) Remove snap ring from ring gear and remove ring gear hub (Fig. 11).

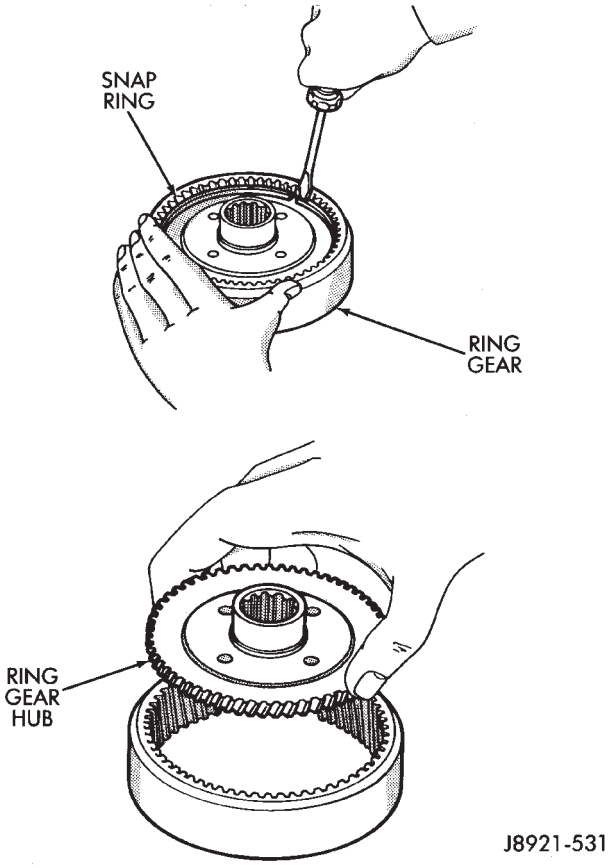

Fig. 11 Removing Ring Gear Hub

(14) Remove race from planetary gear (Fig. 12).

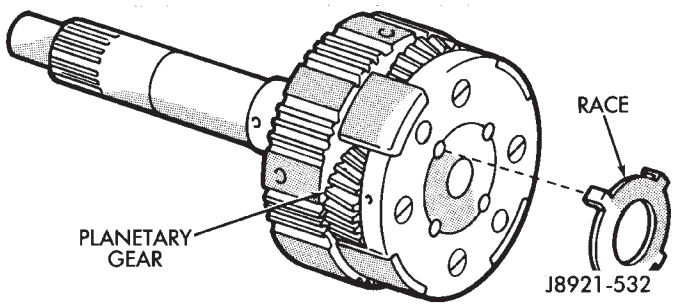

Fig. 12 Remove Planetary Gear Race

(15) Remove snap ring and remove retaining plate (Fig. 13).

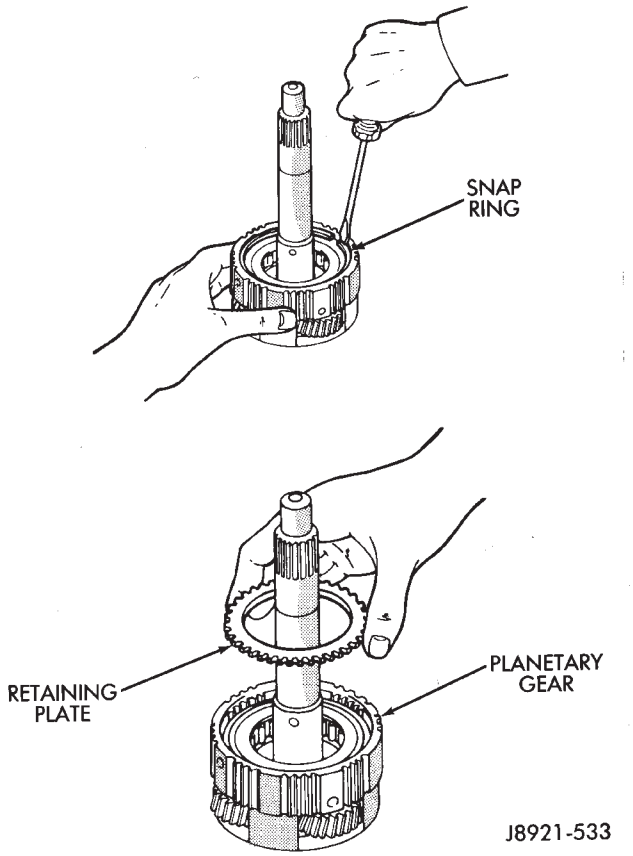

Fig. 13 Removing Snap Ring And Retaining Plate

(16) Remove one-way clutch and outer race as assembly. Then separate race from clutch (Fig. 14).

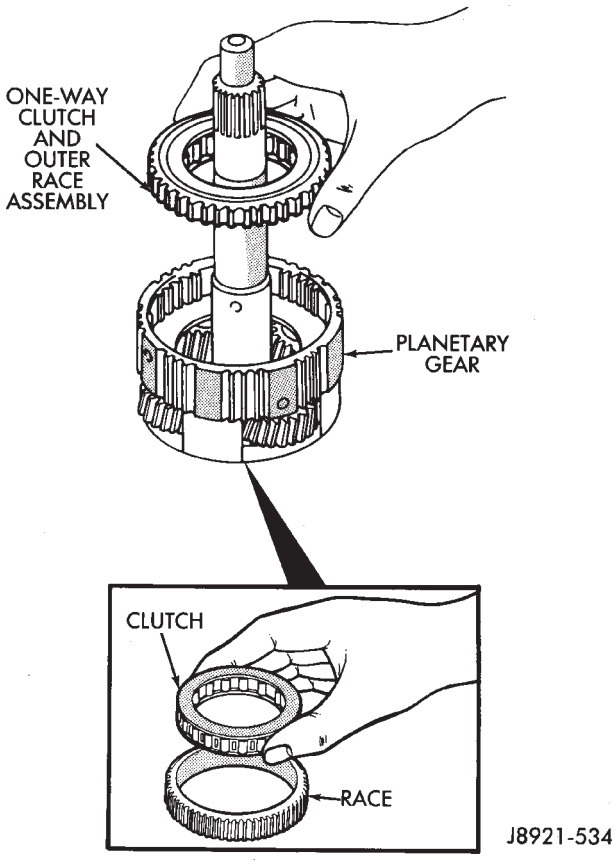

Fig. 14 Removing One-Way Clutch

(17) Remove planetary thrust washer (Fig. 15).

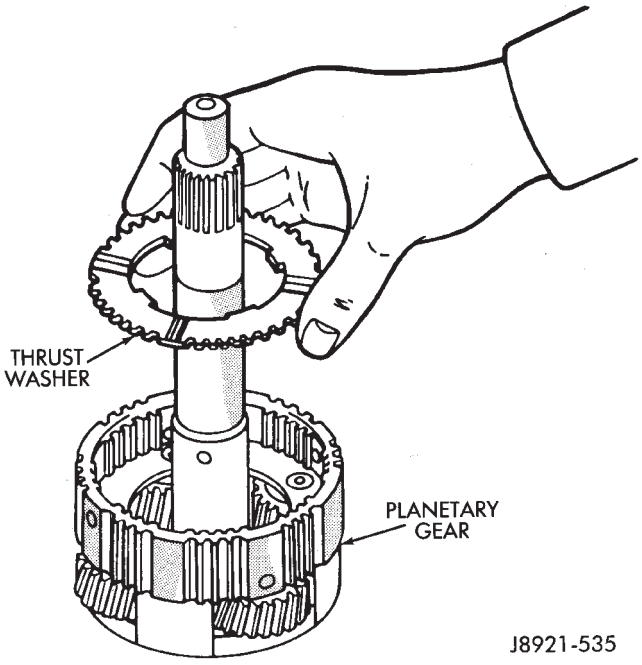

Fig. 15 Removing Planetary Thrust Washer

(18) Check overdrive clutch disc thickness. Minimum allowable thickness is 1.84 mm (0.0724 in.).

(19) Measure free length of piston return springs with springs in retainer (Fig. 16). Length should be 16.8 mm (0.661 in.).

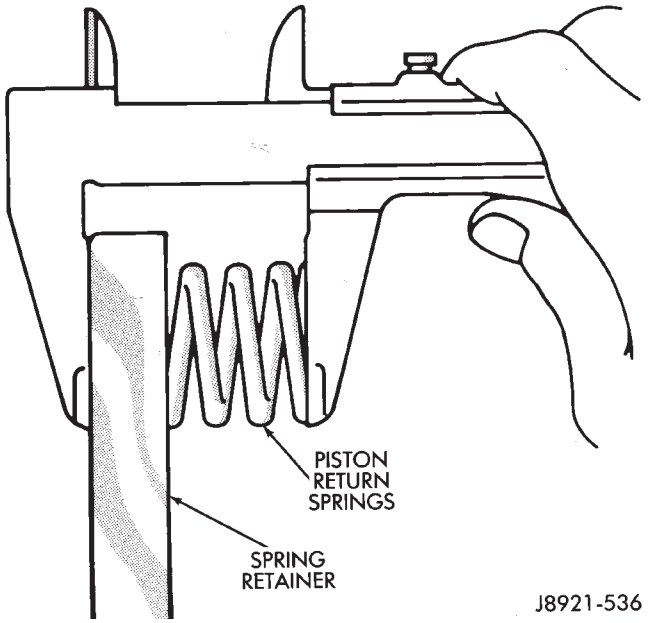

Fig. 16 Checking Piston Return Spring Length

(20) Check clutch piston check ball (Fig. 17). Shake piston to see if ball moves freely. Then check ball sealing by applying low pressure compressed air to ball inlet as shown. Air should not leak past check ball.

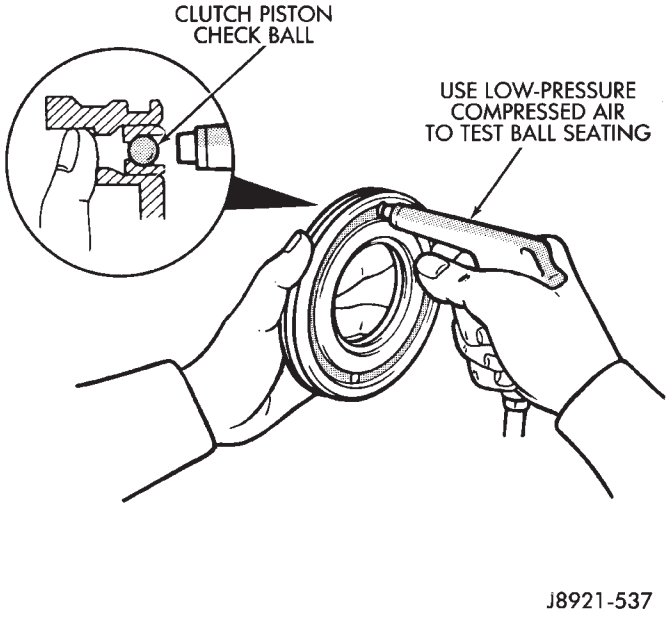

Fig. 17 Testing Clutch Piston Check Ball

(21) Check inside diameter of clutch drum bushings with bore gauge or inside micrometer (Fig. 18). Maximum inside diameter is 27.11 mm (1.0673 in.). Replace drum if bushing inside diameter is greater than specified.

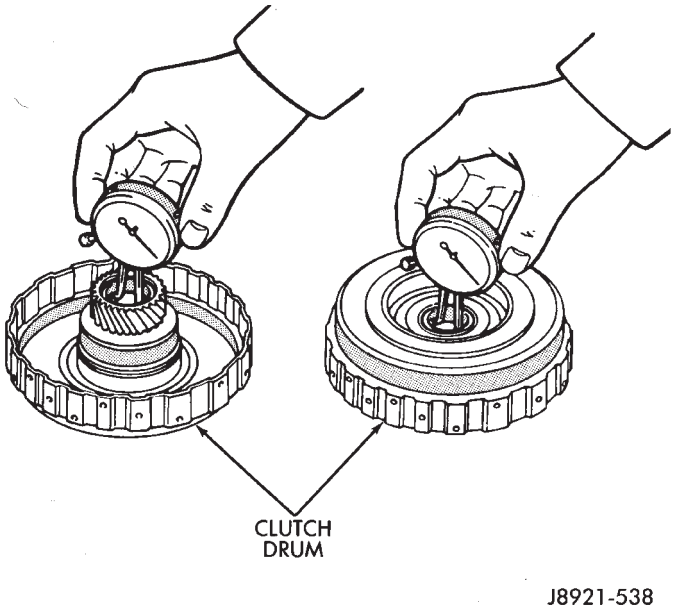

Fig. 18 Checking Clutch Drum Bushings

(22) Check inside diameter of planetary gear bushing (Fig. 19). Maximum inside diameter is 11.27 mm (0.4437 in.). Replace planetary gear if bushing inside diameter is greater then specified.

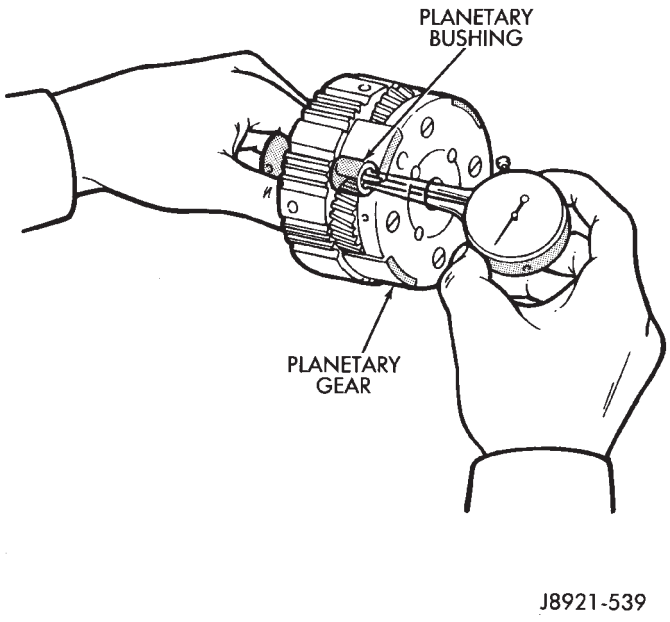

Fig. 19 Checking Planetary Bushing

Assembling Gear And Clutch

(1) Install thrust washer in planetary gear (Fig. 20). **Grooved side of washer faces up and toward front.**

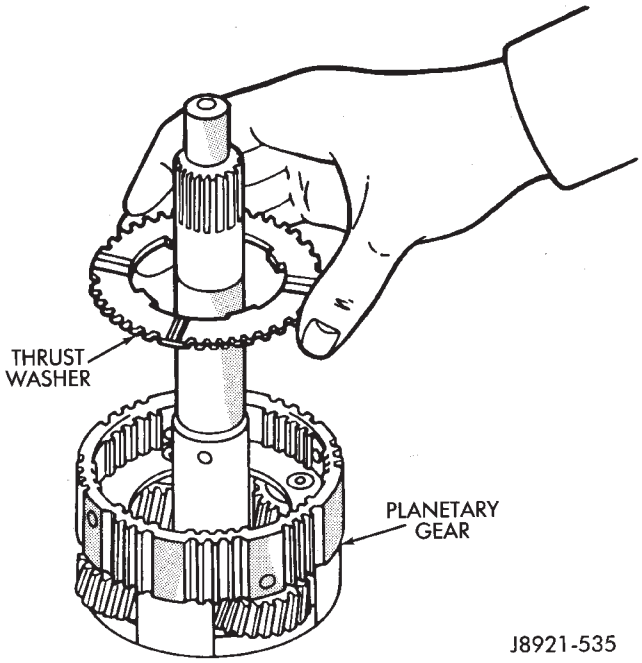

Fig. 20 Install Planetary Thrust Washer

(2) Install one-way clutch in race (Fig. 21). Flanged side of clutch must face upward as shown.

(3) Install assembled one-way clutch and outer race in planetary gear. Be sure flanged side of clutch is facing upward.

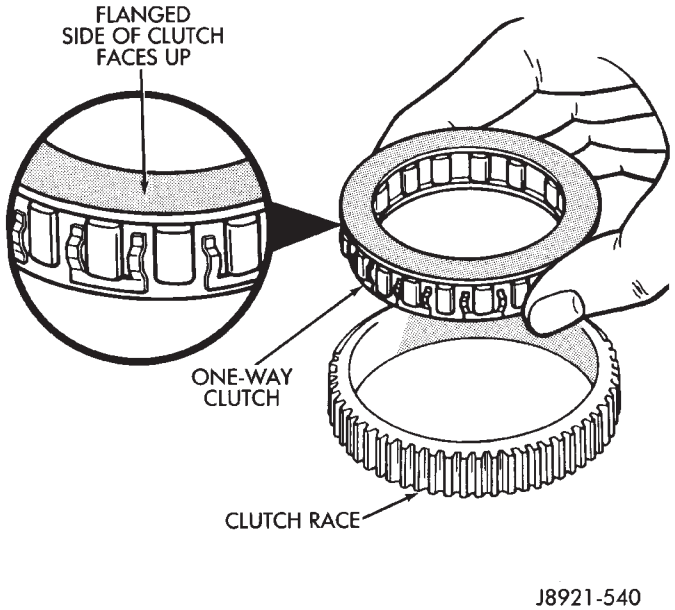

Fig. 21 Assembling One-Way Clutch And Race

(4) Install clutch pack retaining plate and snap ring in planetary gear.

(5) Coat planetary race with petroleum jelly and install it on planetary gear. Outside diameter of race is 41.8 mm (1.646 in.); inside diameter is 27.1 mm (1.067 in.).

(6) Install hub in planetary ring gear and install snap ring.

(7) Coat race and bearing with petroleum jelly and install in planetary ring gear (Fig. 22).

(8) Verify bearing/race size. Outside diameter of race is 47.8 mm (1.882 in.) and inside diameter is 24.2 mm (0.953 in.). Outside diameter of bearing is 46.8 mm (1.843 in.) and inside diameter is 26 mm (1.024 in.).

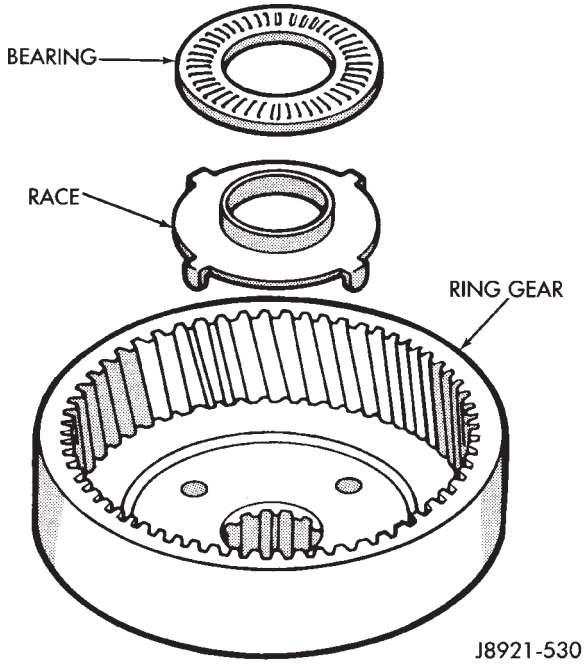

Fig. 22 Install Ring Gear Bearing And Race

(9) Lubricate and install new O-rings on clutch piston. Then install piston in clutch drum.

(10) Install piston return springs in clutch piston (Fig. 23).

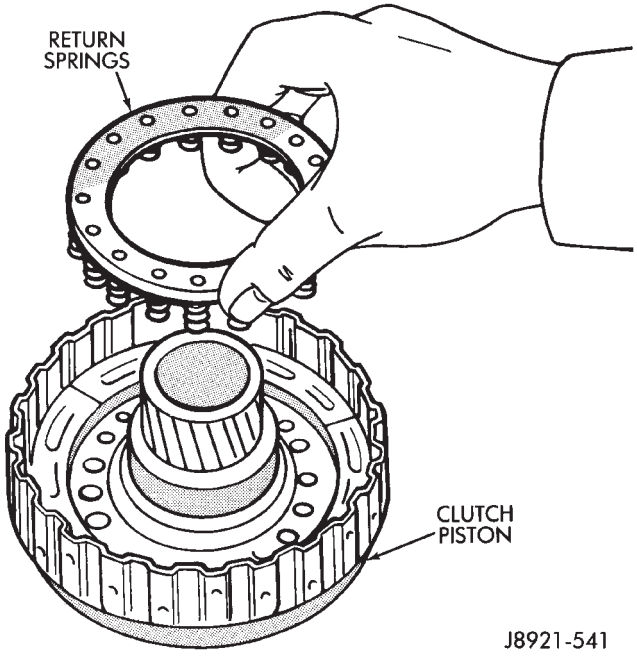

Fig. 23 Installing Piston Return Springs

(11) Install piston snap ring. Compress piston return springs with Tool 7538 and shop press (Fig. 24).

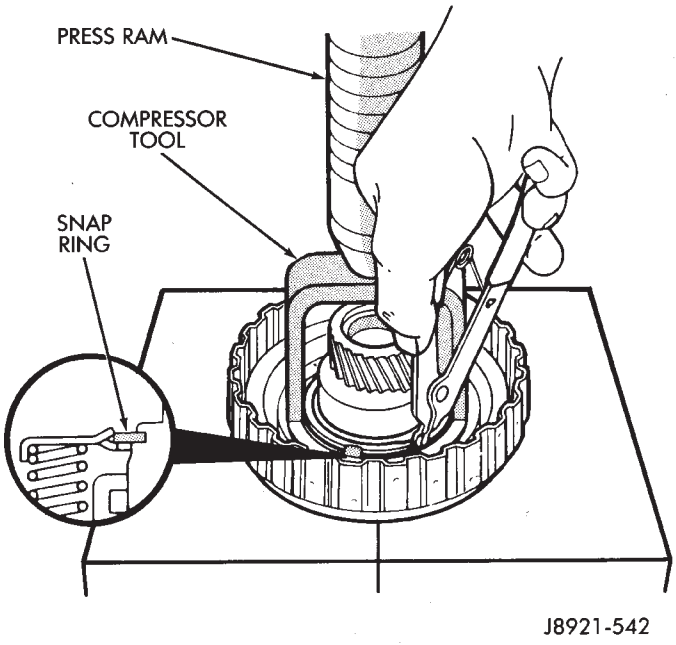

Fig. 24 Installing Clutch Piston Snap Ring

(12) Install clutch pack in drum. Install steel plate first, then a disc (Fig. 25). Continue installation sequence until required number of discs and plates have been installed.

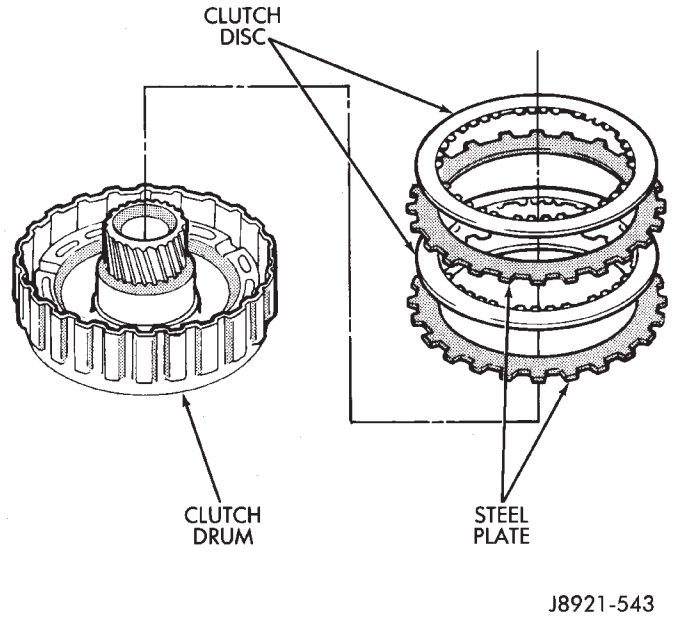

Fig. 25 Installing Overdrive Clutch Discs And Plates

(13) Install clutch pack retainer with flat side facing downward. Then install retainer snap ring (Fig. 26). Compress springs with suitable tool.

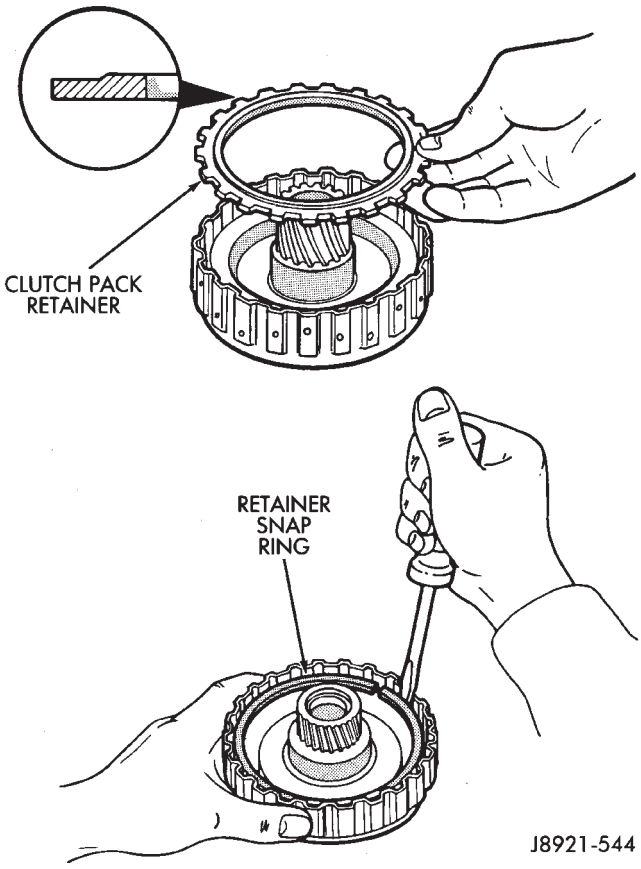

Fig. 26 Installing Retainer And Snap Ring

(14) Install clutch drum bearing and race assembly (Fig. 27). Be sure bearing rollers face upward as shown. Outside diameter of assembled bearing and race is 50.2 mm (1.976 in.). Inside diameter is 28.9 mm (1.138 in.).

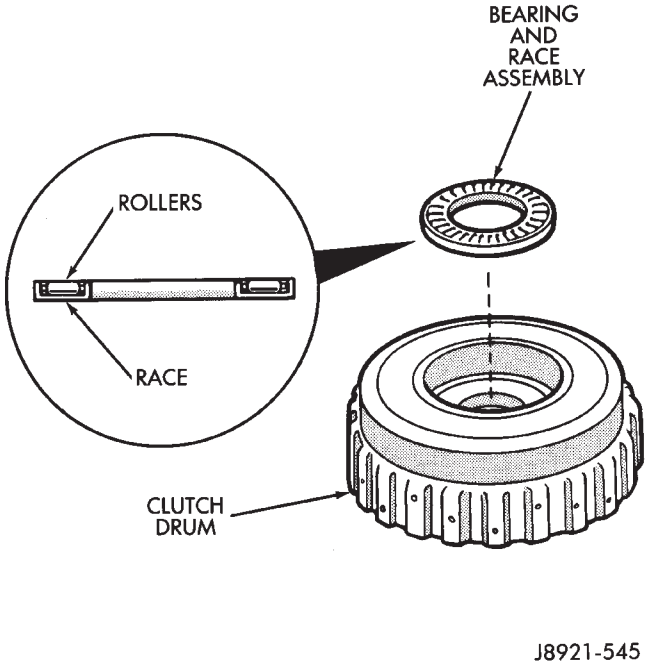

Fig. 27 Installing Clutch Drum Bearing And Race Assembly

(15) Install clutch on planetary gear.

(16) Verify one-way clutch operation. Hold drum and turn planetary shaft clockwise and counterclockwise. Shaft should turn clockwise freely but lock when turned counterclockwise.

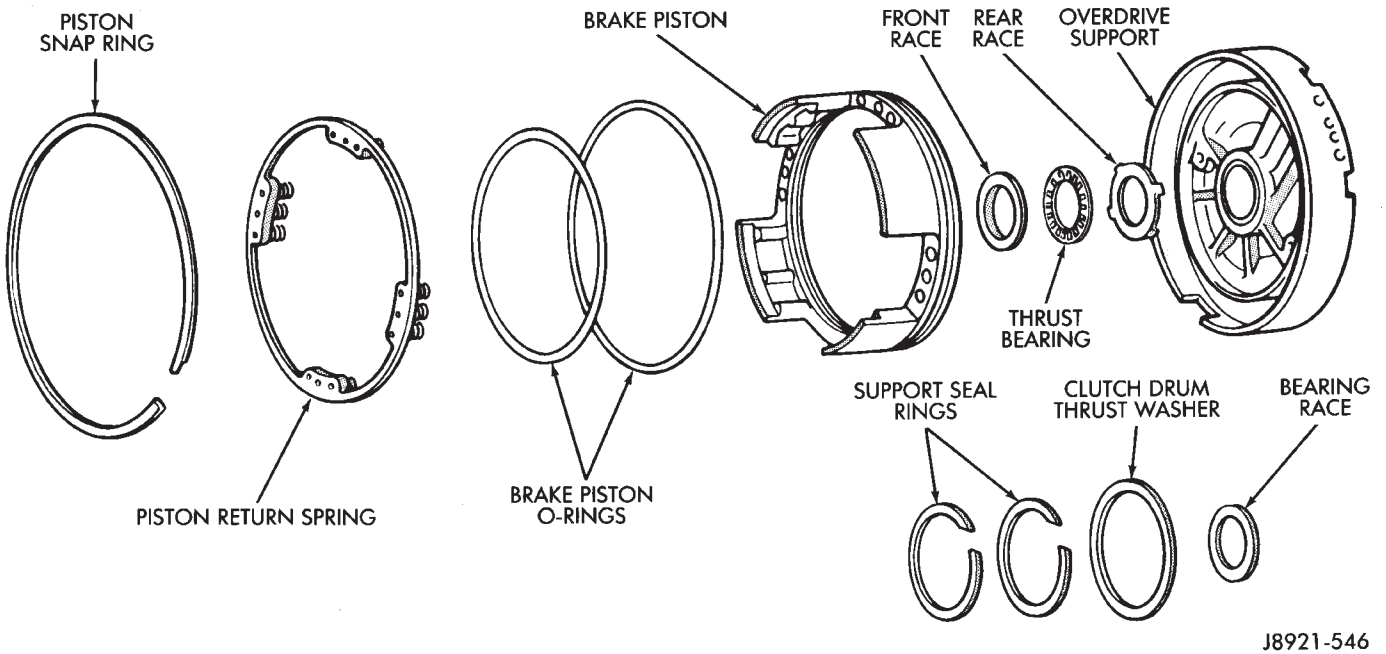

Fig. 1 Overdrive Support Components

OVERDRIVE SUPPORT OVERHAUL

SUPPORT DISASSEMBLY

(1) Check brake piston operation. Mount support on clutch (Fig. 2).

(2) Apply compressed air through support feed hole and observe brake piston movement (Fig. 2). Piston should move smoothly and not bind or stick. If operation is incorrect, replace piston and support.

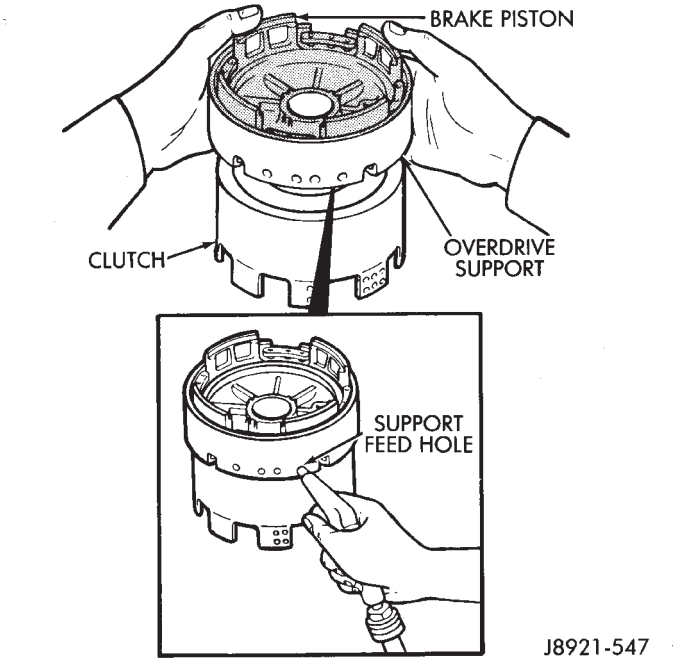

Fig. 2 Checking Brake Piston Movement

(3) Remove thrust bearing front race, thrust bearing and rear race (Fig. 3).

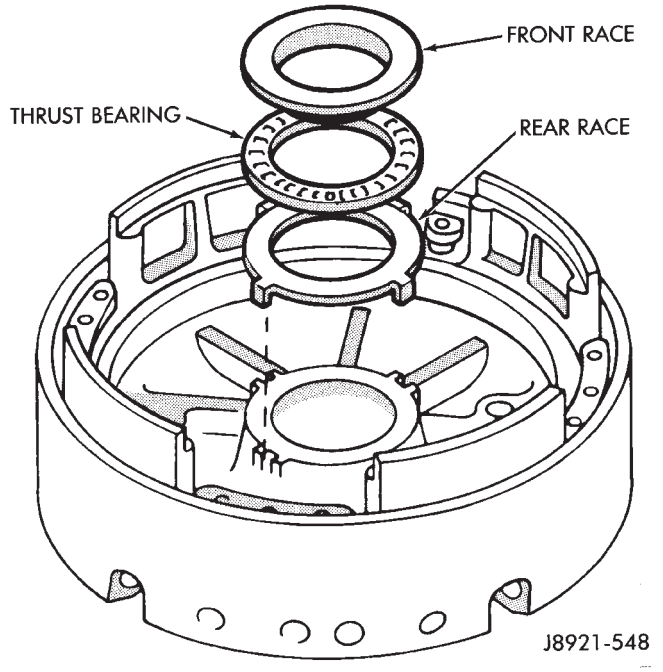

Fig. 3 Removing Support Thrust Bearing And Races

(4) Turn overdrive support over and remove bearing race and clutch drum thrust washer (Fig. 4).

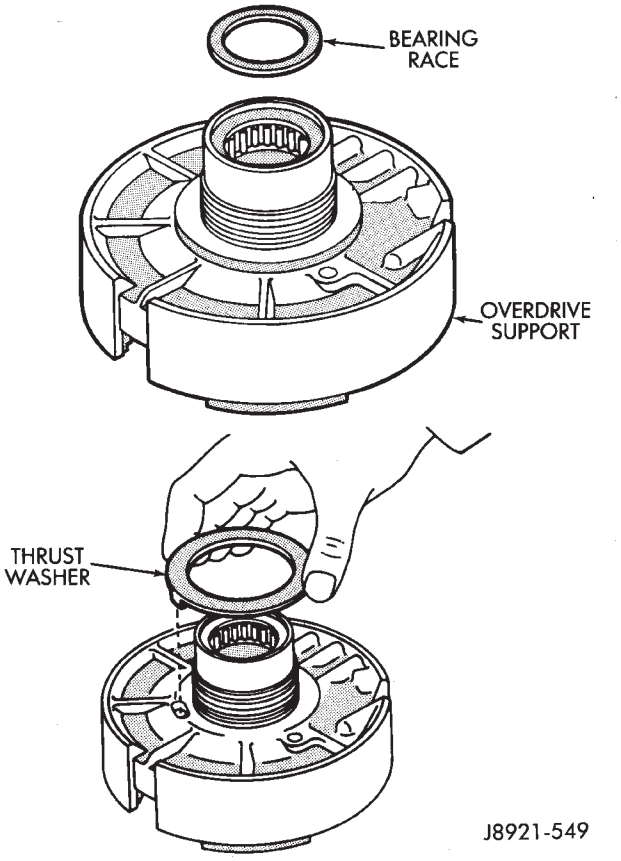

Fig. 4 Removing Clutch Drum Thrust Washer And Race

(5) Compress piston return spring with Spring Compressor 7537 and remove piston snap ring (Fig. 5).

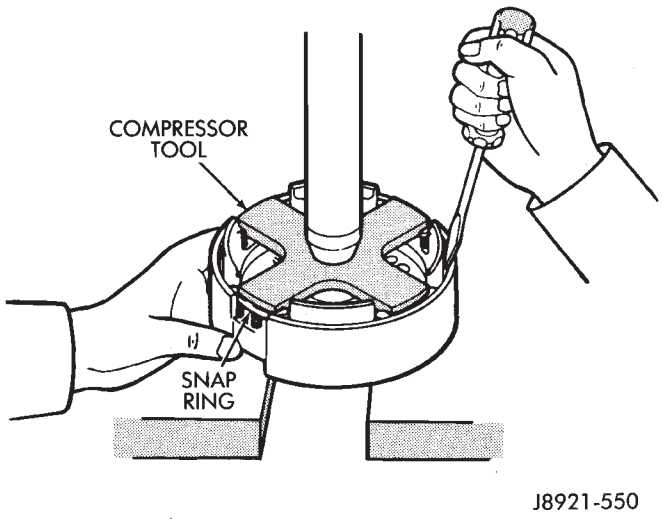

Fig. 5 Removing/Installing Piston Snap Ring

(6) Mount support in direct clutch and remove brake piston with compressed air. Apply air to same feed hole used when checking piston operation.

(7) Remove and discard support O-rings (Fig. 1).

(8) Remove support seal rings (Fig. 6).

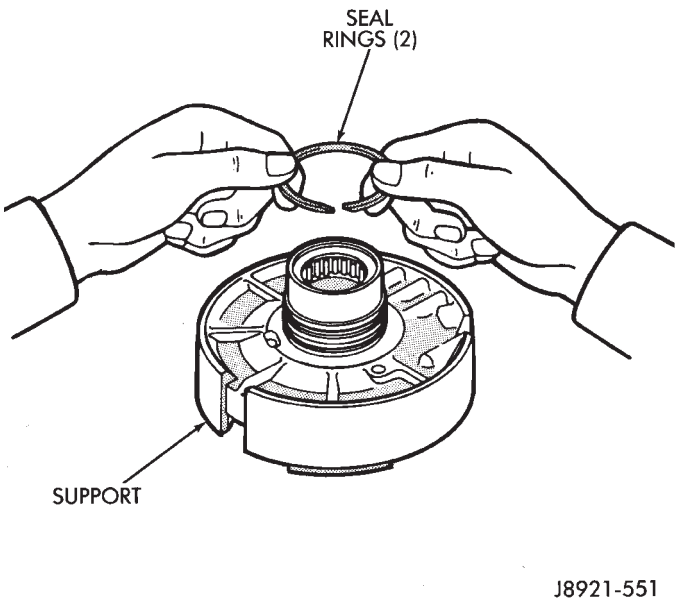

Fig. 6 Removing Support Seal Rings

(9) Measure free length of piston return springs with springs mounted in retainer (Fig. 7). Length should be 17.23 mm (0.678 in.).

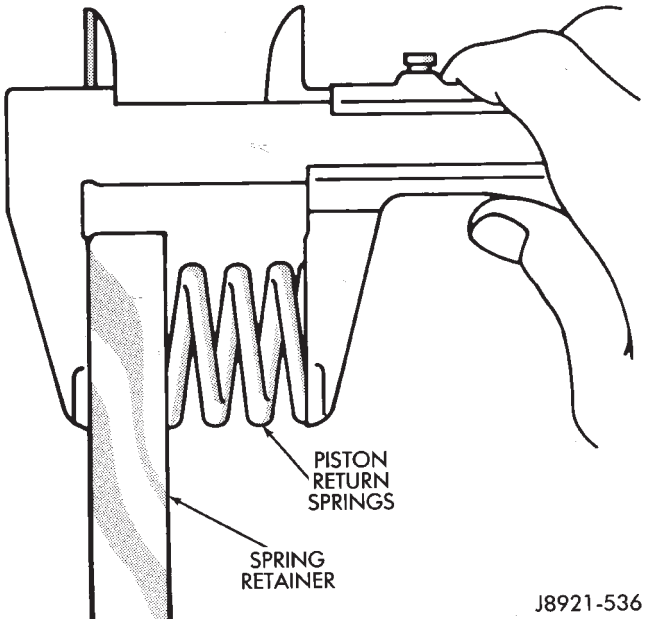

Fig. 7 Checking Piston Return Spring Length

(10) Clean support components and dry them with compressed air.

(11) Inspect overdrive support and brake piston. Replace support and piston if either part is worn or damaged.

ASSEMBLING OVERDRIVE SUPPORT

(1) Lubricate new support seal rings. Then compress rings and install them on support (Fig. 8).

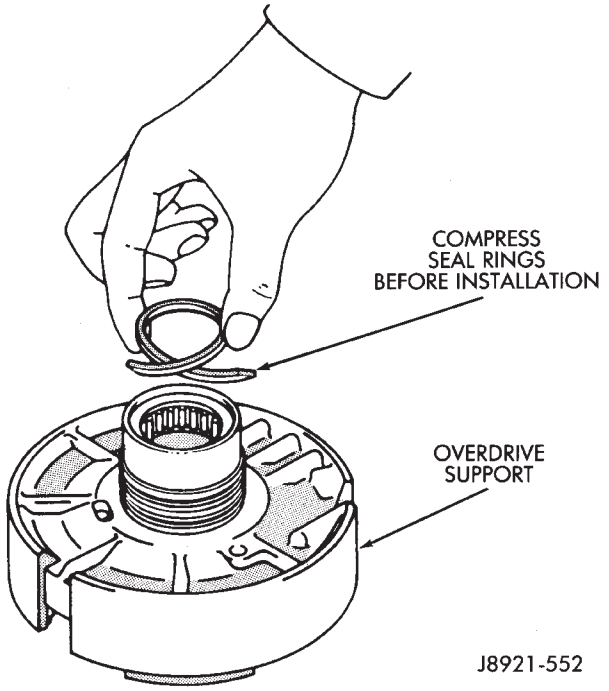

Fig. 8 Installing Support Seal Rings

(2) Lubricate and install new O-rings on brake piston. Then carefully seat piston in support.

(3) Install return springs on brake piston.

(4) Compress return springs with Spring Compressor 7537 (Fig. 5) and install piston snap ring.

(5) Install support bearing race and clutch drum thrust washer (Fig. 4).

(6) Install thrust bearing and front and rear bearing races. Thrust bearing rollers should face upward as shown (Fig. 9).

(7) Verify thrust bearing/race sizes (Fig. 9).

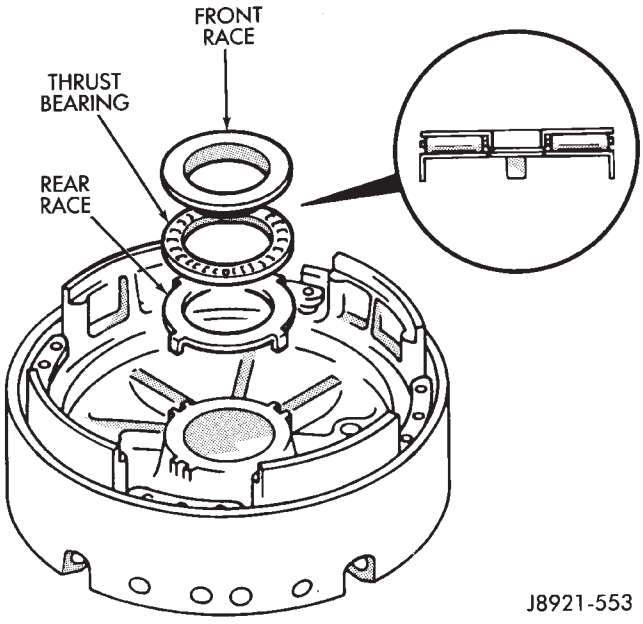

Fig. 9 Installing Support Thrust Bearing And Races

- Front race outer diameter is 47.8 mm (1.882 in.) and inside diameter is 30.7 mm (1.209 in.).

• Rear race outer diameter is 47.8 mm (1.882 in.) and inside diameter is 34.3 mm (1.350 in.).
• Bearing outer diameter is 47.7 mm (1.878 in.) and inside diameter is 32.7 mm (1.287 in.).

(8) Verify brake piston operation. Use same procedure described at beginning of disassembly. Piston should operate smoothly and not bind or stick.

DIRECT CLUTCH OVERHAUL

CLUTCH DISASSEMBLY

(1) Remove direct clutch from forward clutch (Fig. 1).

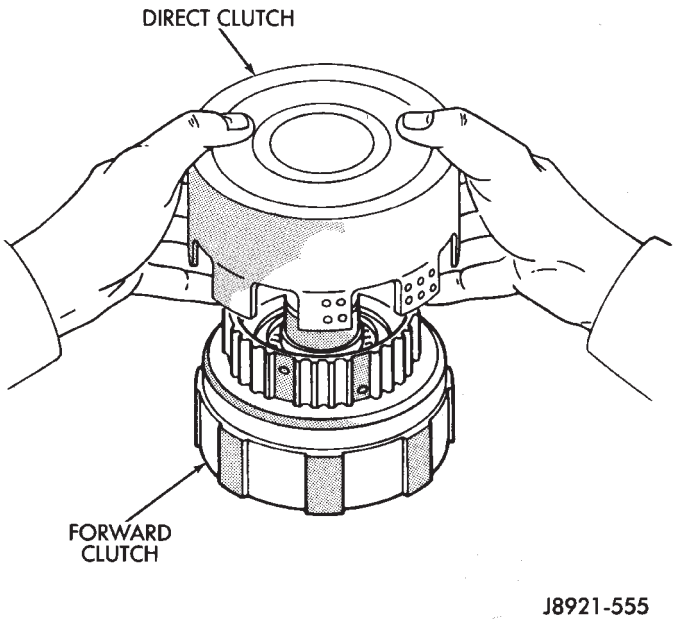

Fig. 1 Separate Direct Clutch From Forward Clutch

(2) Remove clutch drum thrust washer (Fig. 2).

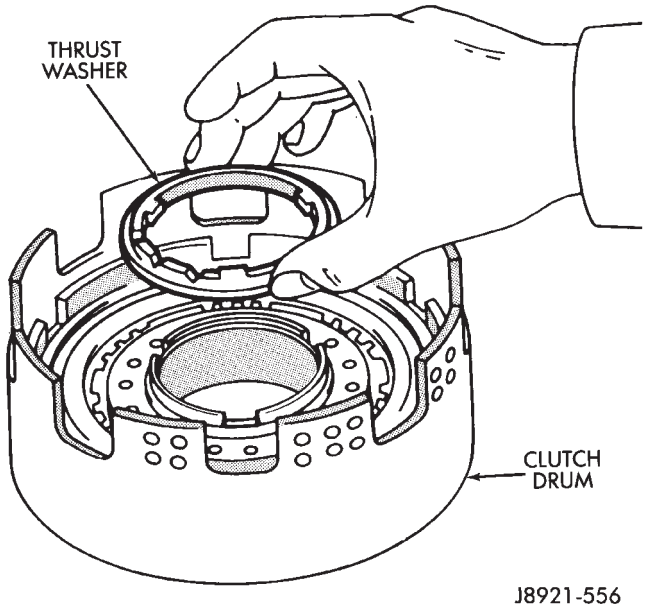

Fig. 2 Removing Clutch Drum Thrust Washer

(3) Check clutch piston stroke length as outlined in following steps.

(4) Mount direct clutch on overdrive support assembly (Fig. 3).

(5) Mount dial indicator on clutch and position indicator plunger on clutch piston (Fig. 4).

(6) Apply 57-114 psi air pressure through feed hole in overdrive support and note piston stroke length (Fig. 4). Check stroke at least twice.

(7) Piston stroke length should be 1.37 mm - 1.67 mm (0.054 -0.065 in.). If stroke length is incorrect, either the clutch pack retainer or clutch discs will have to be replaced.

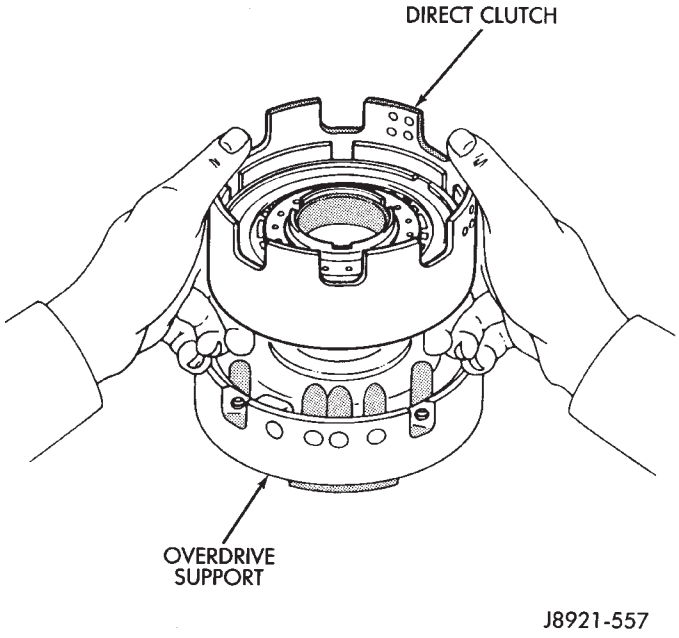

Fig. 3 Mount Direct Clutch On Overdrive Support

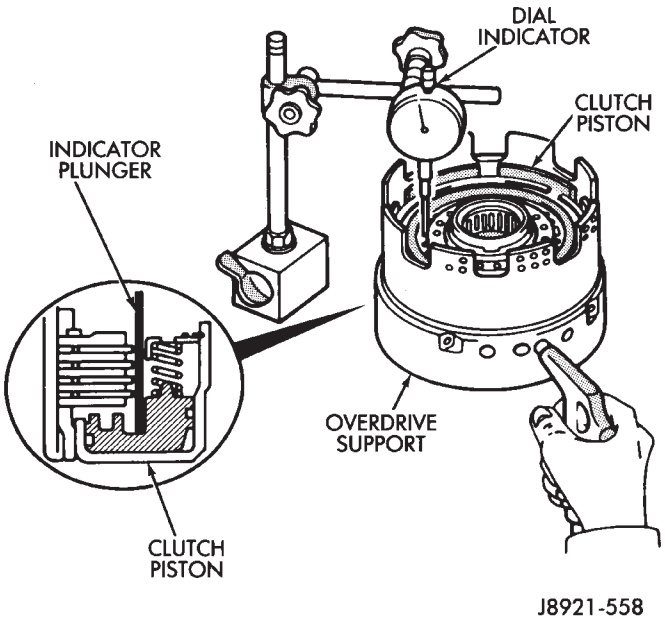

Fig. 4 Checking Direct Clutch Piston Stroke Length

(8) Remove clutch pack snap ring and remove retainer and clutch pack from drum (Fig. 5).

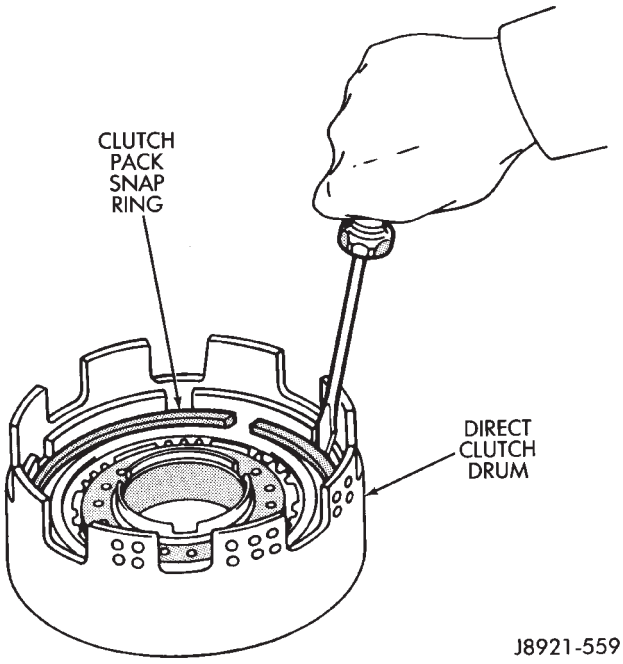

Fig. 5 Removing Clutch Pack Snap Ring

(9) Compress clutch piston return springs with tool 7538 and remove clutch piston snap ring (Fig. 6).

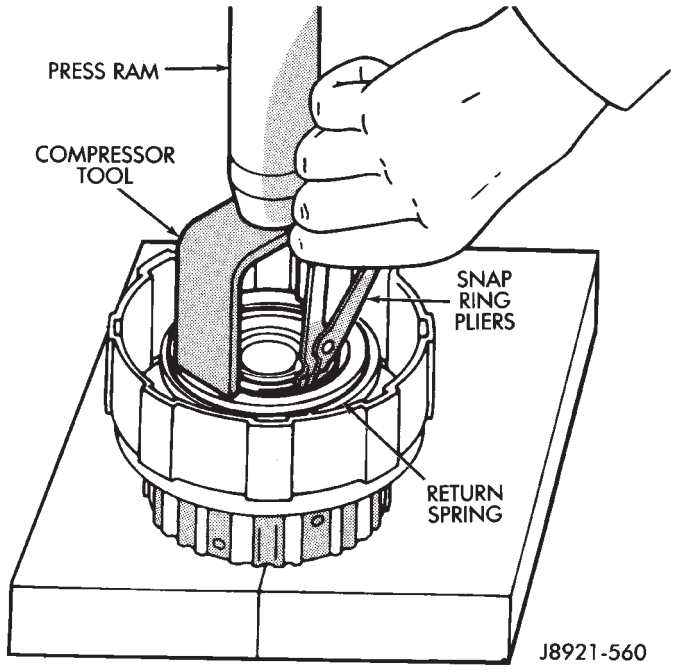

Fig. 6 Removing Piston Return Spring

(10) Remove compressor tool and return spring.

(11) Remove clutch piston. Remount clutch on overdrive support (Fig. 7). Apply compressed air through piston feed hole in support to remove piston. Use only enough air to ease piston out.

(12) Remove and discard clutch piston O-rings.

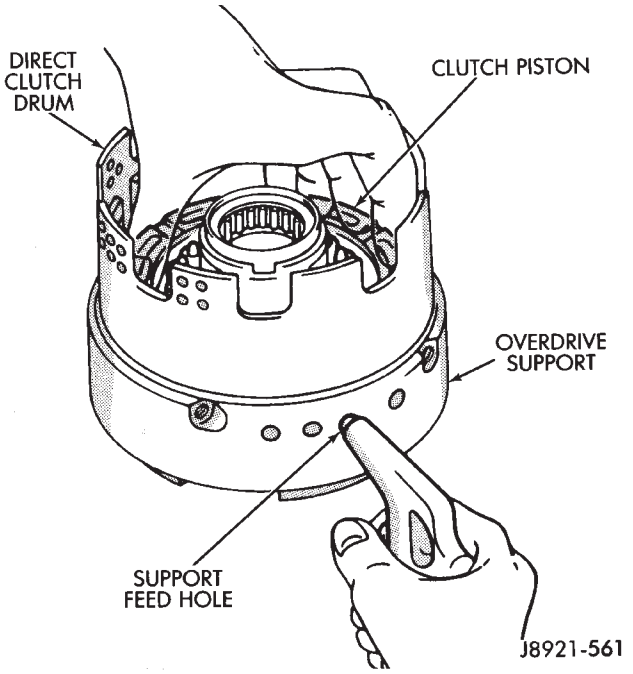

Fig. 7 Removing Direct Clutch Piston

(13) Measure clutch disc thickness. Minimum allowable thickness is 1.84 mm (0.0724 in). Replace clutch pack if necessary.

(14) Measure free length of piston return springs with springs in retainer (Fig. 8). Length should be 21.32 mm (0.839 in.). Replace return springs if not within specification.

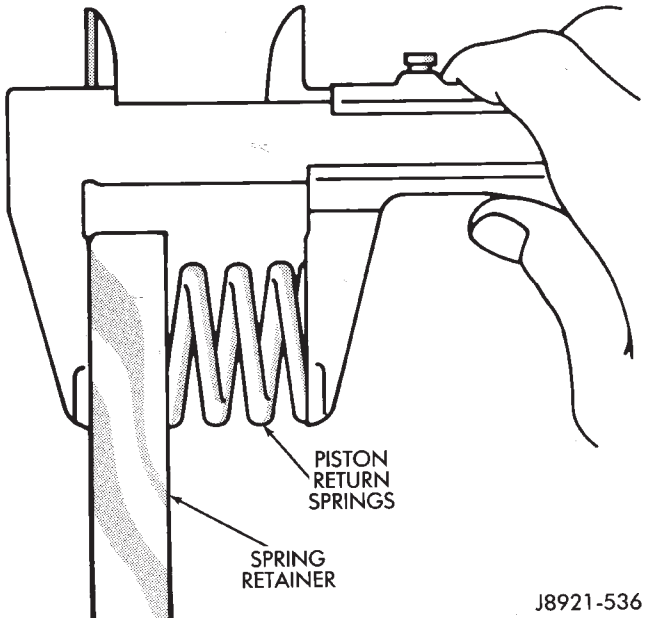

Fig. 8 Checking Piston Return Spring Length

(15) Check clutch piston check ball (Fig. 9). Shake piston to see if ball moves freely. Then check ball seating by applying low pressure compressed air to ball inlet as shown. Air should not leak past check ball.

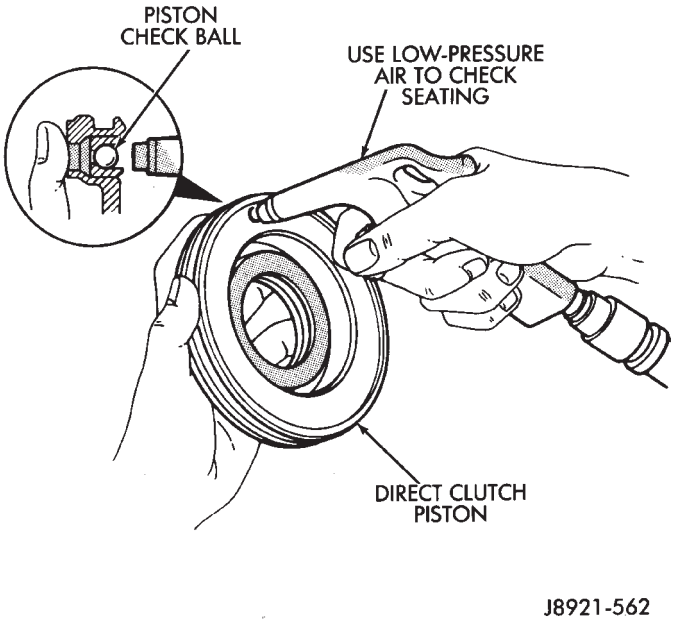

Fig. 9 Testing Piston Check Ball Seating

(16) Measure inside diameter of clutch drum bushing. Inside diameter should be no more than 53.97 mm (2.1248 in.). Replace drum if bushing inside diameter is greater than specified.

DIRECT CLUTCH ASSEMBLY

(1) Lubricate and install replacement O-rings on clutch piston (Fig. 10).

(2) Install clutch piston in drum and install return springs on piston.

(3) Compress piston return springs with Tool 7538 and install snap ring (Fig. 6). Be sure snap ring end gap is not aligned with spring retainer tab.

(4) Install clutch discs and plates (Fig. 11). Install plate then disc until all plates and discs are installed. Four plates and discs are required.

(5) Install clutch pack retainer in drum (Fig. 12).

(6) Install clutch pack snap ring (Fig. 12).

(7) Check snap ring position. If necessary, shift snap ring until end gap is **not** aligned with any notches in clutch drum (Fig. 12).

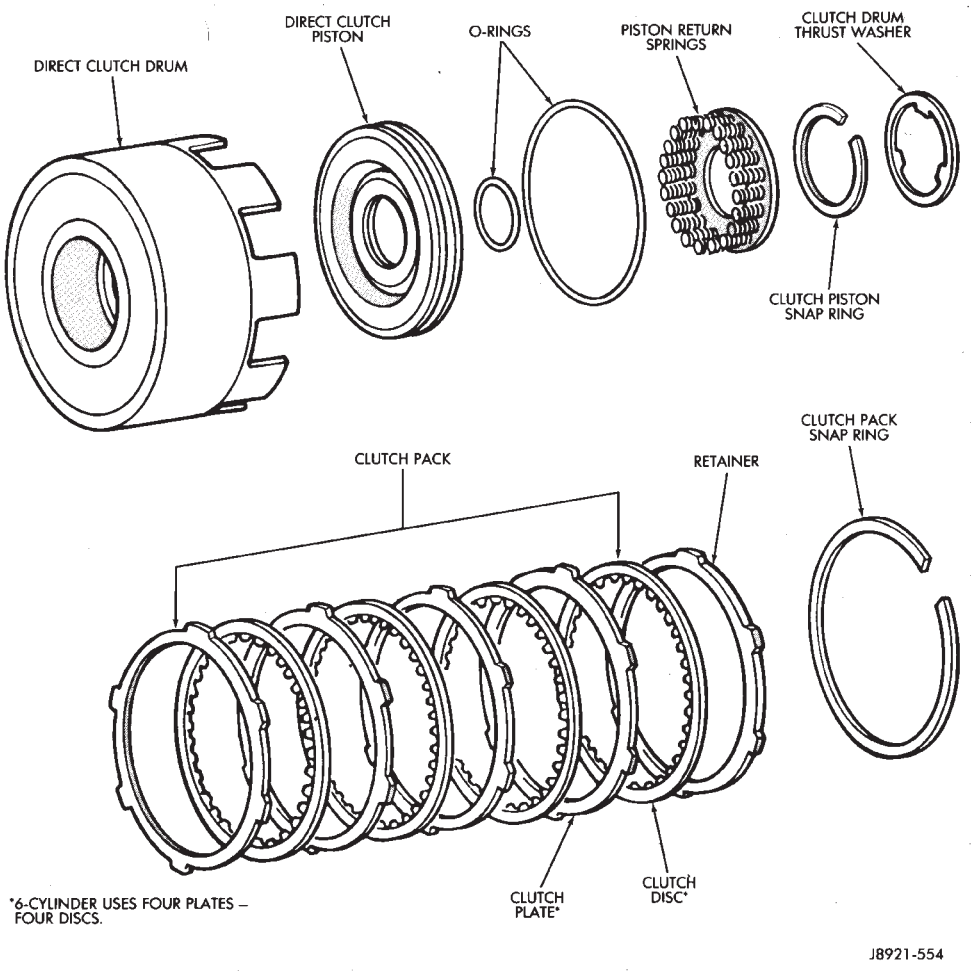

Fig. 10 Direct Clutch Components

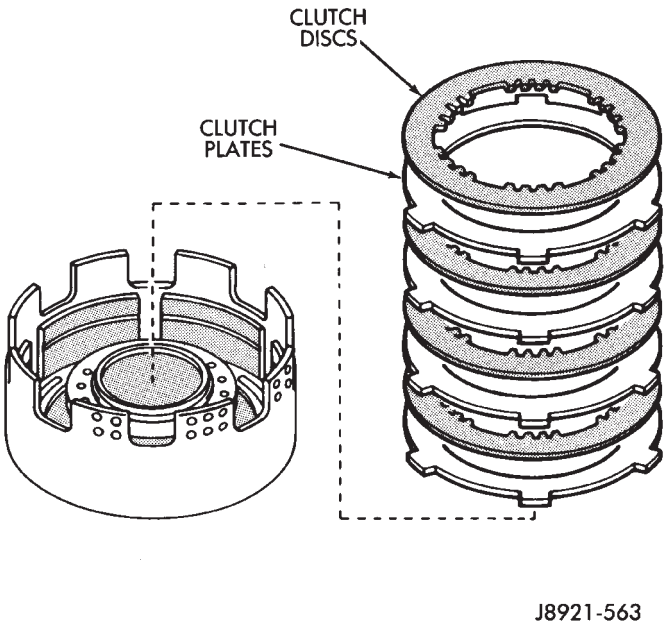

Fig. 11 Installing Direct Clutch Discs And Plates

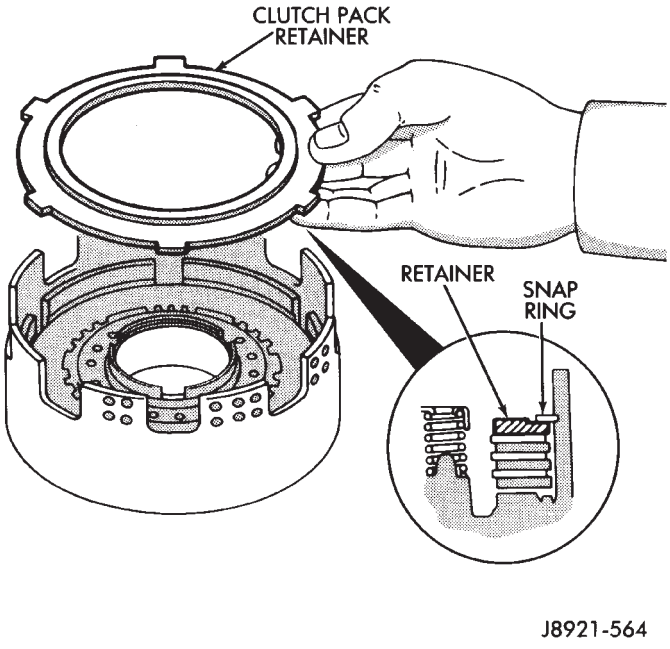

Fig. 12 Install Clutch Pack Retainer

(8) Lubricate clutch drum thrust washer with petroleum jelly and install it in drum (Fig. 3).

(9) Mount direct clutch assembly on forward clutch assembly and check assembled height (Fig. 14). Height should be 70.3 to 71.5 mm (2.767 to 2.815 in.).

(10) If assembled height is incorrect, clutches are not seated.

(11) If clutch height is OK, remove direct clutch from forward clutch and proceed to forward clutch overhaul.

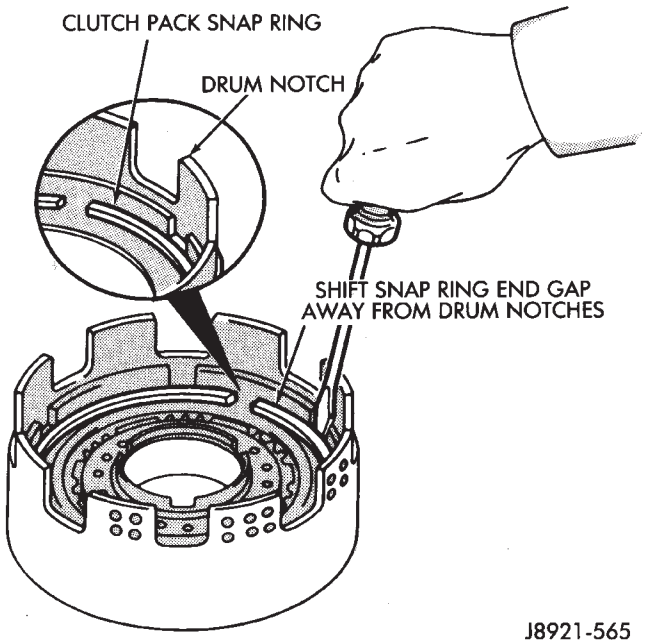

Fig. 13 Adjusting Clutch Pack Snap Ring Position

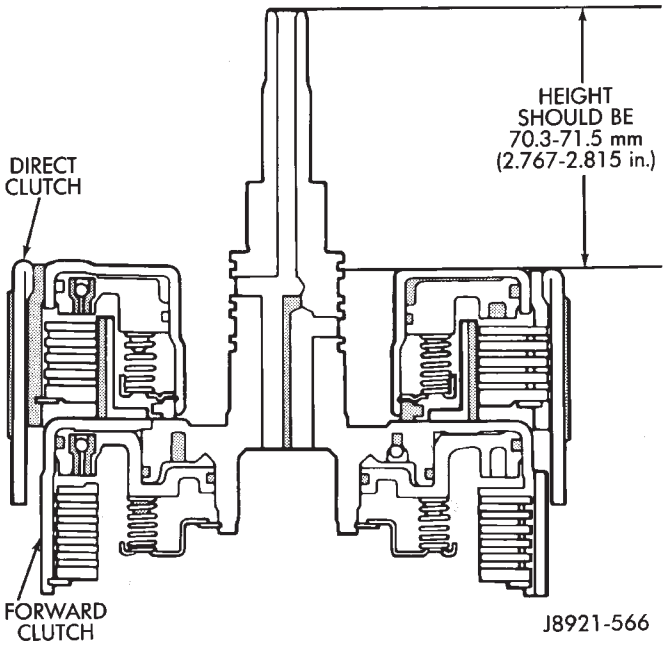

Fig. 14 Checking Direct Clutch Assembled Height

FORWARD CLUTCH OVERHAUL

FORWARD CLUTCH DISASSEMBLY (FIG. 1)

(1) Check clutch piston stroke as outlined in following steps (2) through (7).

(2) Position overdrive support on wood blocks and mount forward clutch drum on support (Fig. 2).

(3) Remove bearing and race from forward clutch drum (Fig. 2).

(4) Mount dial indicator on clutch drum. Position dial indicator plunger against clutch piston (Fig. 3).

(5) Apply compressed air through right side feed hole in support and note piston stroke length on dial indicator.

(6) Stroke length should be 3.55 - 3.73 mm (0.1348 - 0.1469 in.).

(7) Replace clutch discs if stroke length is incorrect.

(8) Remove clutch pack snap ring and remove retainer and clutch pack (Fig. 4).

(9) Remove clutch pack cushion plate (Fig. 5).

(10) Compress clutch springs with Tool 7538 and remove piston snap ring.

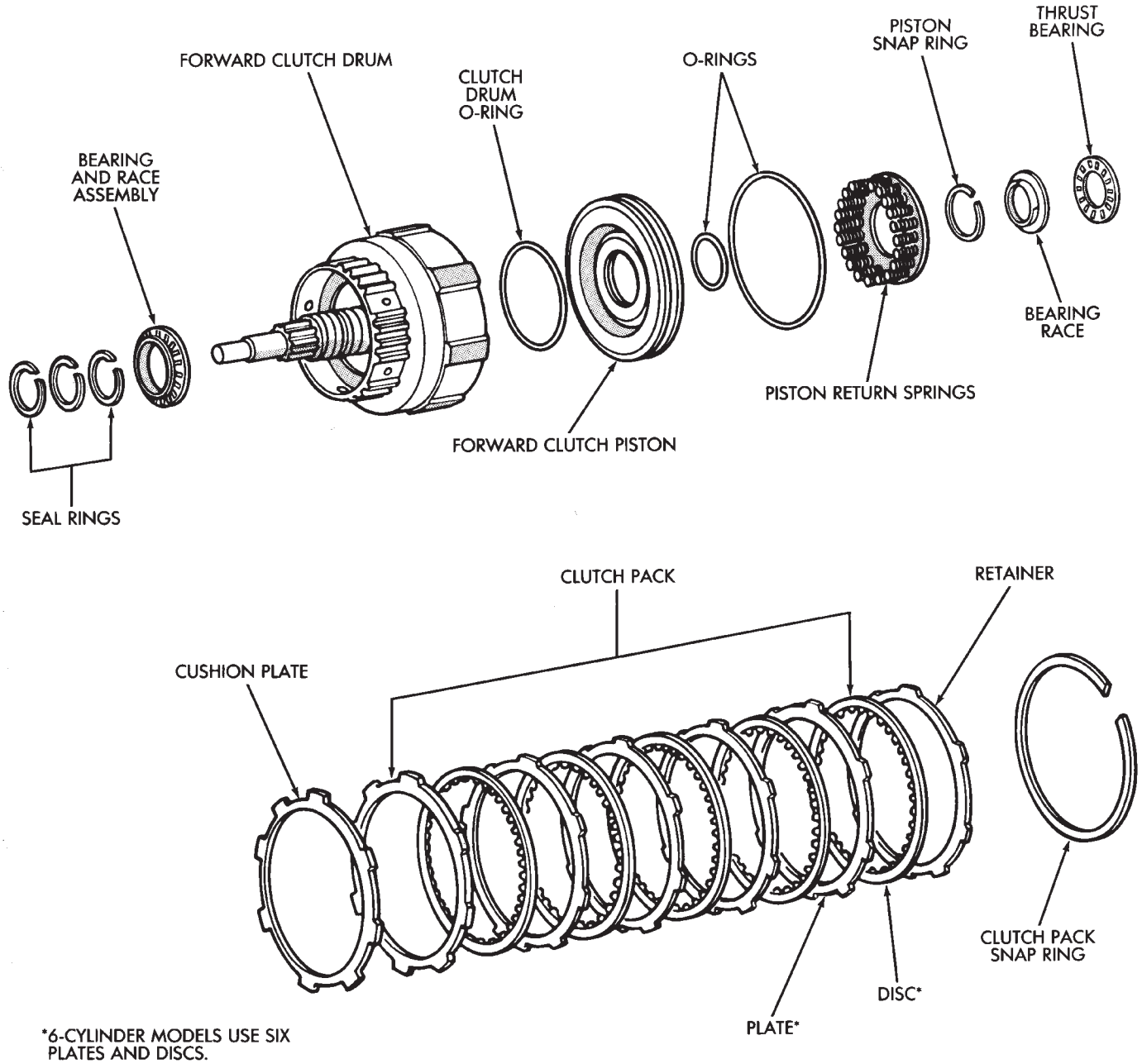

Fig. 1 Forward Clutch Components

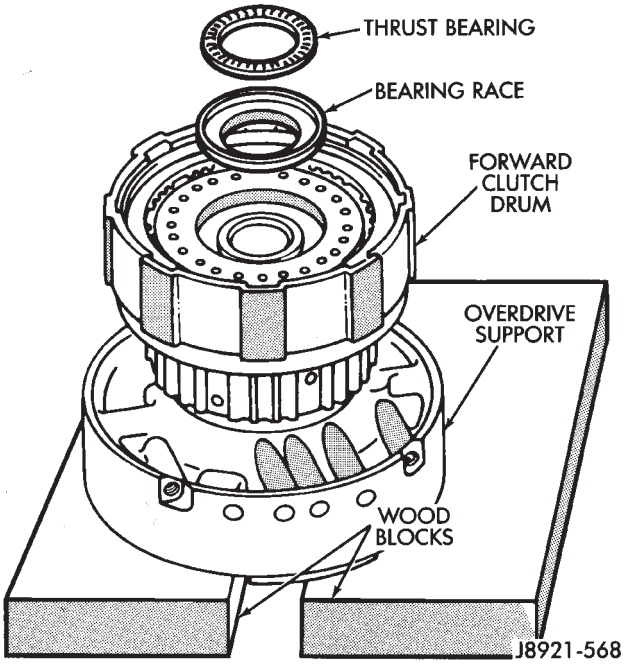

Fig. 2 Positioning Drum And Support On Wood Blocks

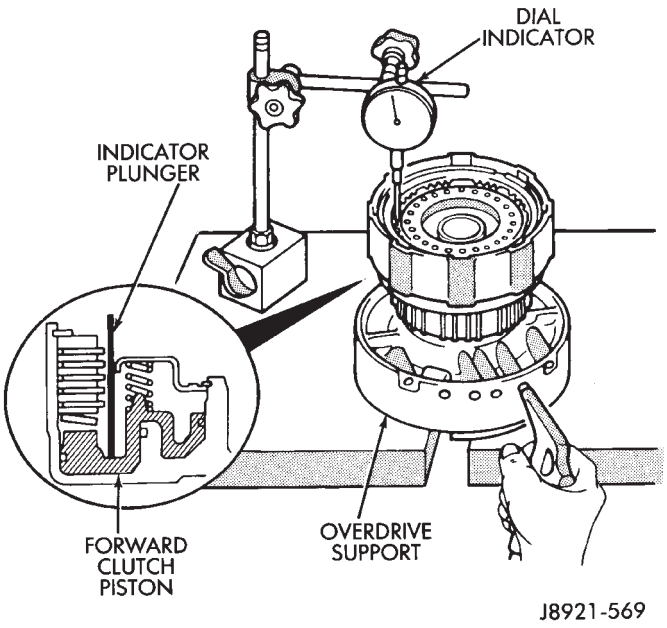

Fig. 3 Checking Forward Clutch Piston Stroke Length

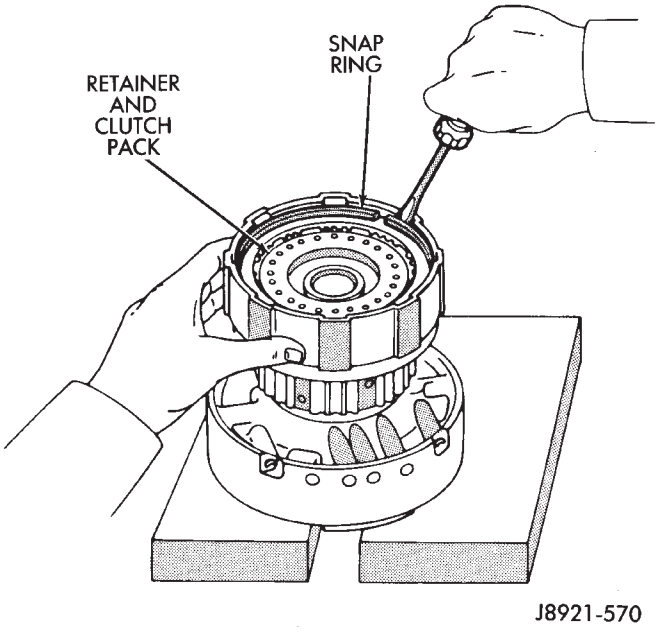

Fig. 4 Removing Retainer And Clutch Pack

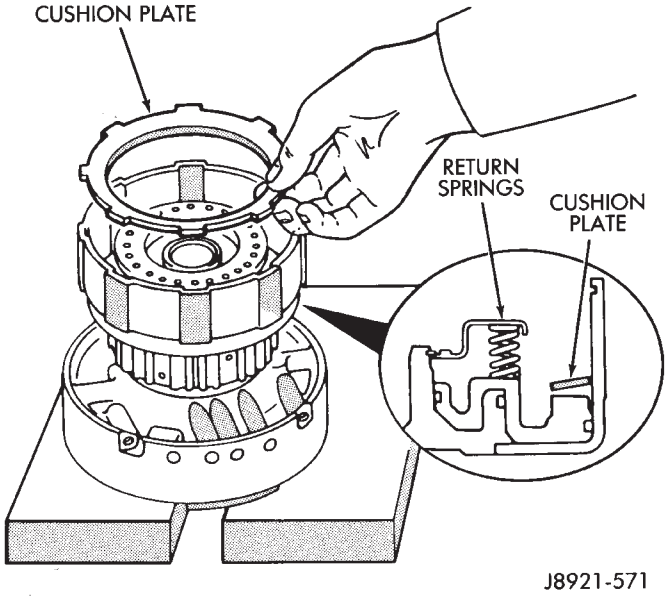

Fig. 5 Removing Cushion Plate

(11) Remove spring compressor tool and piston return springs.

(12) Remount forward clutch drum on overdrive support (Fig. 6).

(13) Apply compressed air through feed hole in support to remove piston (Fig. 6). Use only enough air pressure to ease piston out of drum.

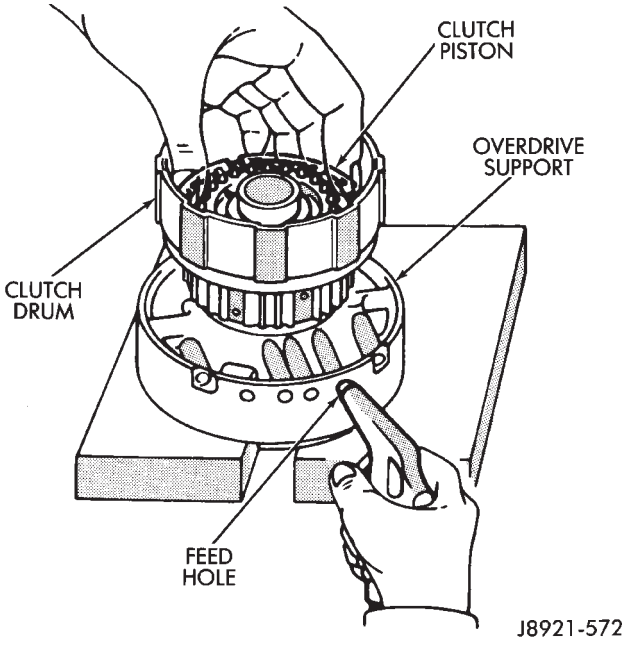

Fig. 6 Removing Forward Clutch Piston

(14) Remove and discard clutch piston O-rings.

(15) Remove clutch drum O-ring from rear hub of drum.

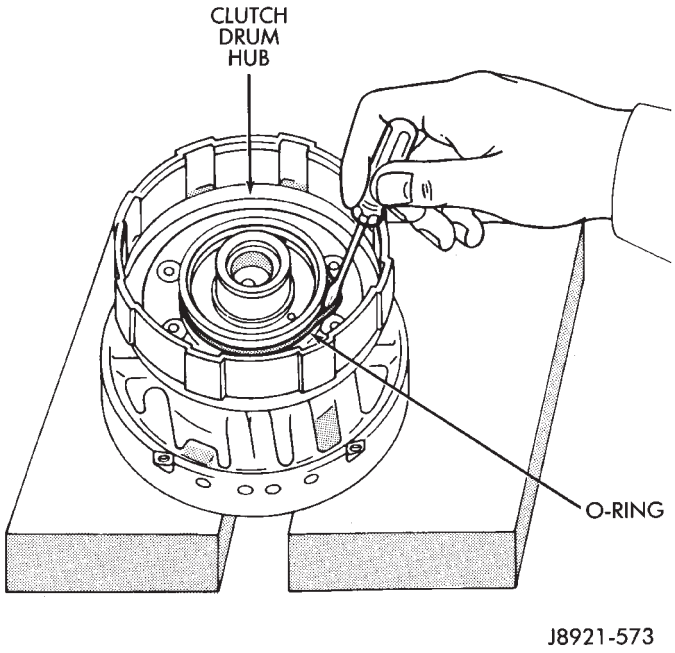

Fig. 7 Removing/Installing Clutch Drum O-Ring

(16) Remove three seal rings from clutch drum shaft (Fig. 8).

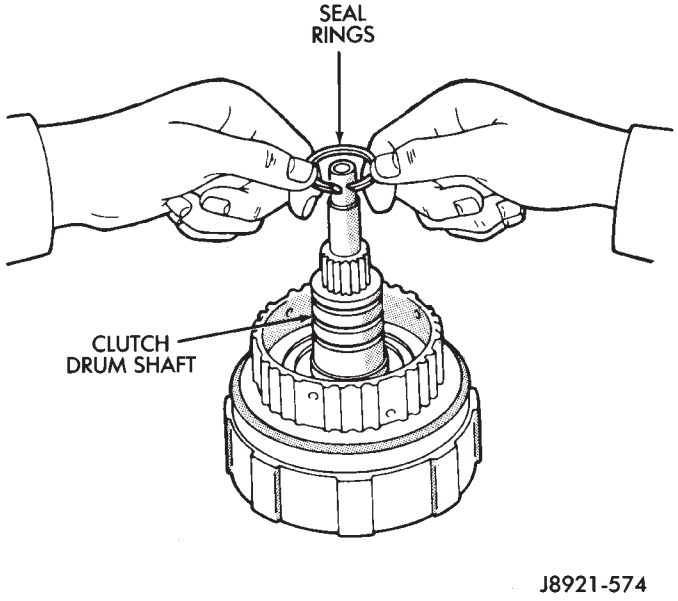

Fig. 8 Removing Clutch Drum Seal Rings

(17) Remove thrust bearing and race assembly from clutch drum (Fig. 9).

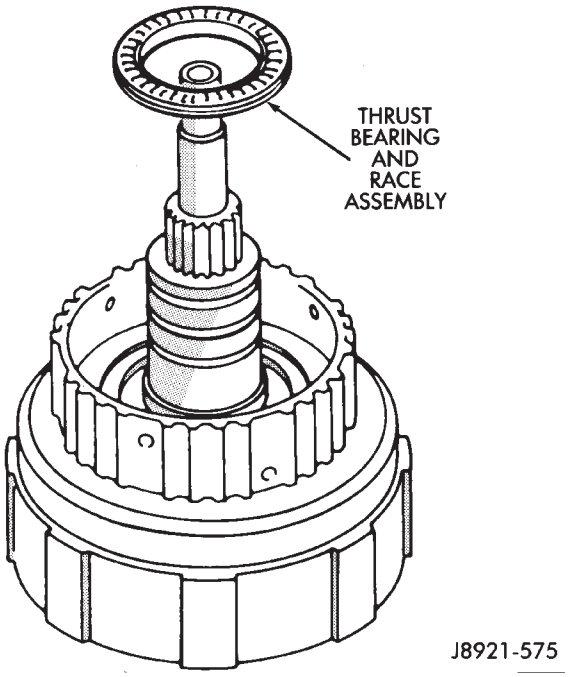

Fig. 9 Removing Clutch Drum Thrust Bearing Assembly

(18) Measure clutch disc thickness (Fig. 10). Minimum allowable thickness is 1.51 mm (0.0595 in.).

(19) Measure free length of piston return springs with springs mounted in retainer (Fig. 11). Length should be 19.47 mm (0.767 in.). Replace springs and retainer if length is incorrect.

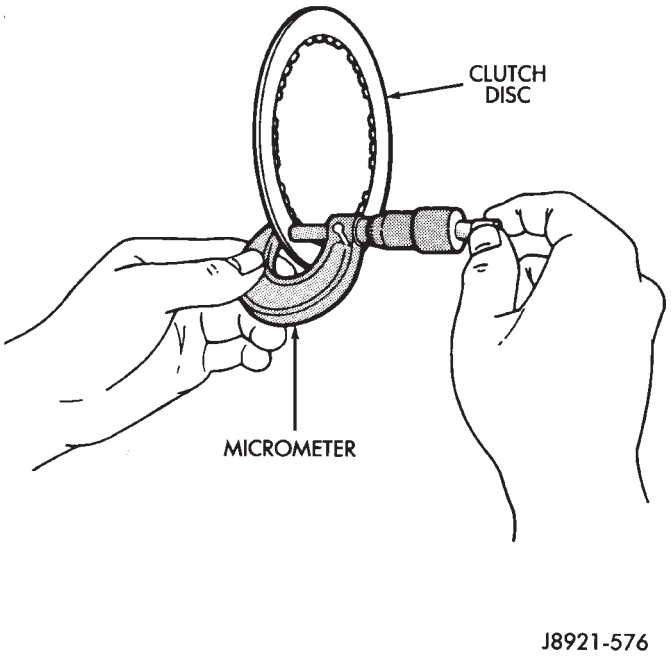

Fig. 10 Measuring Clutch Disc Thickness

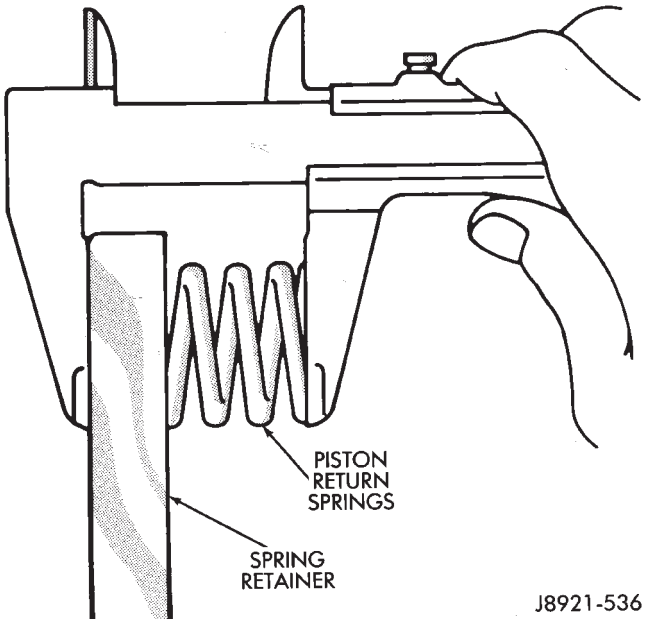

Fig. 11 Checking Return Spring Length

(20) Inspect clutch piston check ball (Fig. 12). Ball should move freely within piston. Check ball seating by applying low pressure compressed air to ball feed hole. Ball should seat firmly and not leak air.

(21) Measure inside diameter of bushing in clutch drum hub. Maximum allowable diameter is 24.08 mm (0.9480 in.). Replace clutch drum if bushing inside diameter is greater than specified.

FORWARD CLUTCH ASSEMBLY

(1) Lubricate bearing and race assembly with petroleum jelly and install it in clutch drum (Fig. 13).

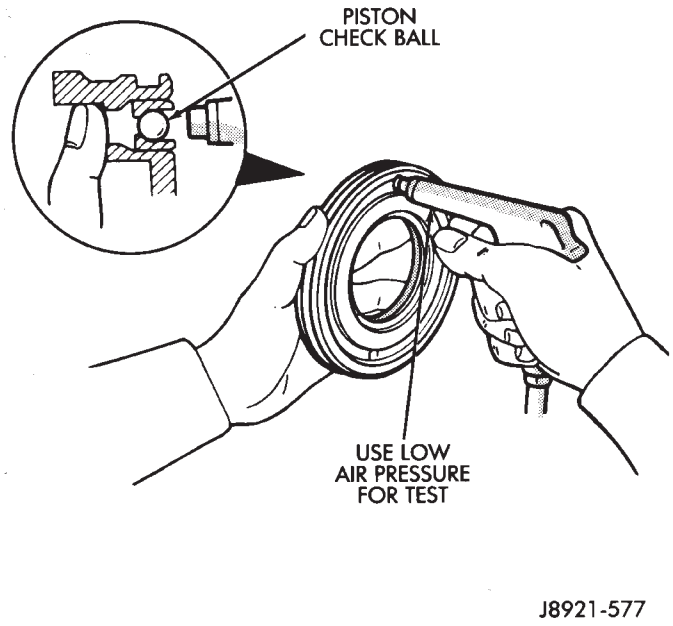

Fig. 12 Testing Piston Check Ball

Race side of assembly faces downward and toward drum. Bearing rollers face up (Fig. 13)

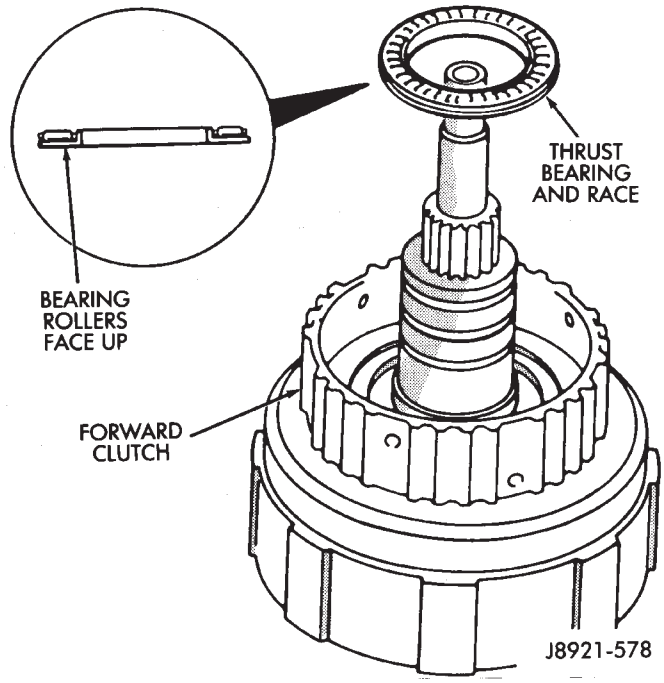

Fig. 13 Installing Thrust Bearing And Race

(2) Coat new clutch drum shaft seal rings with petroleum jelly. Before installing drum shaft seal rings, squeeze each ring so ring ends overlap (Fig. 14). This tightens ring making clutch installation easier.

(3) Install seal rings on shaft. Keep rings closed as tightly as possible during installation. Avoid overspreading them.

(4) Mount clutch drum on overdrive support.

(5) Lubricate and install new O-ring on clutch drum hub (Fig. 7).

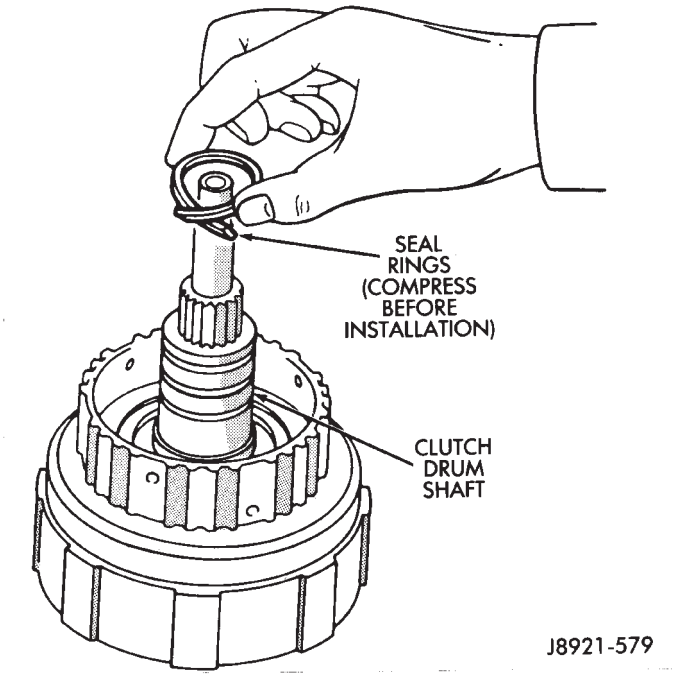

Fig. 14 Installing Clutch Drum Shaft Seal Rings

(6) Lubricate and install new O-rings on clutch piston and install piston in drum.

(7) Install piston return springs.

(8) Compress piston return springs with Tool 7538 and shop press and install piston snap ring. Be sure snap ring end gap is not aligned with any notches in drum.

(9) Install cushion plate in drum. Concave side of plate faces downward (Fig. 5).

(10) Install clutch discs, plates and retainer (Fig. 15). Install tabbed plate followed by disc until required number of plates and discs are installed. Use six plates and discs.

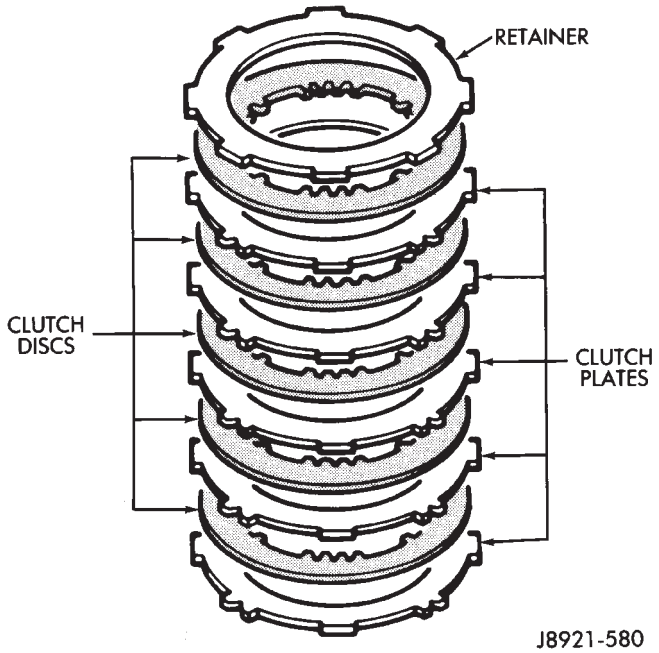

Fig. 15 Installing Forward Clutch Discs And Plates

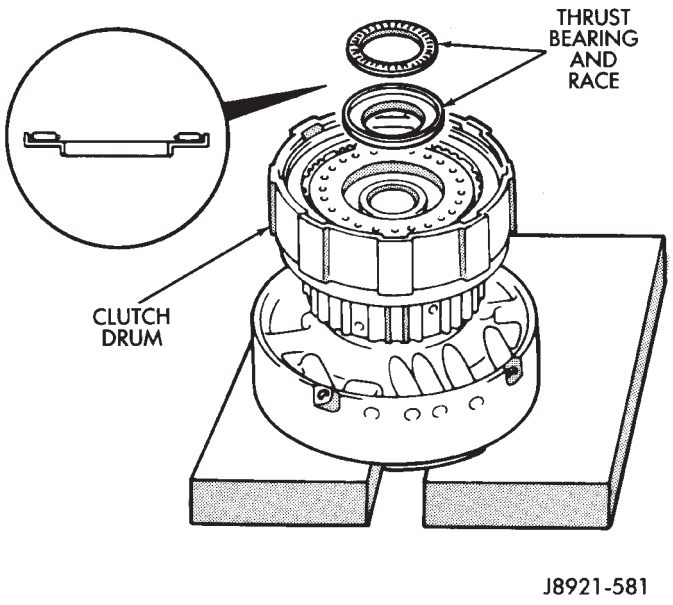

Fig. 16 Installing Thrust Bearing And Race

(11) Install clutch pack snap ring.

(12) Recheck clutch piston stroke length using same method outlined at beginning of disassembly procedure. If stroke length is not within specified limits, replace clutch discs.

(13) Lubricate race and bearing with petroleum jelly and install them in clutch drum (FIg. 16). Be sure bearing rollers face up and race lip seats in drum as shown.

(14) Verify bearing and race size.

- Outer diameter of bearing is 46.7 mm (1.839 in).
- Outer diameter of race is 48.9 mm (1.925 in.).
- Inner diameter of bearing and race is 26.0 mm (1.024 in.).

(15) Mount forward clutch on direct clutch and check assembled height (Fig. 17). Height should be 70.3 - 71.5 mm (2.767 - 2.815 in.).

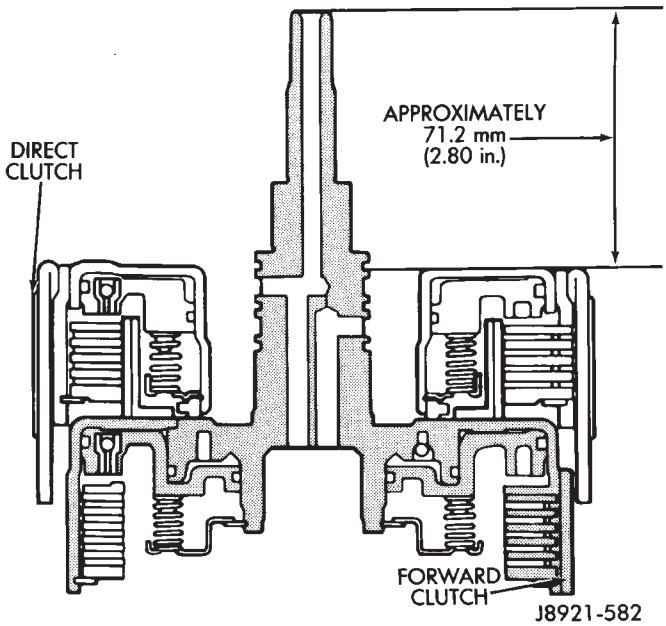

Fig. 17 Checking Forward Clutch Assembled Height

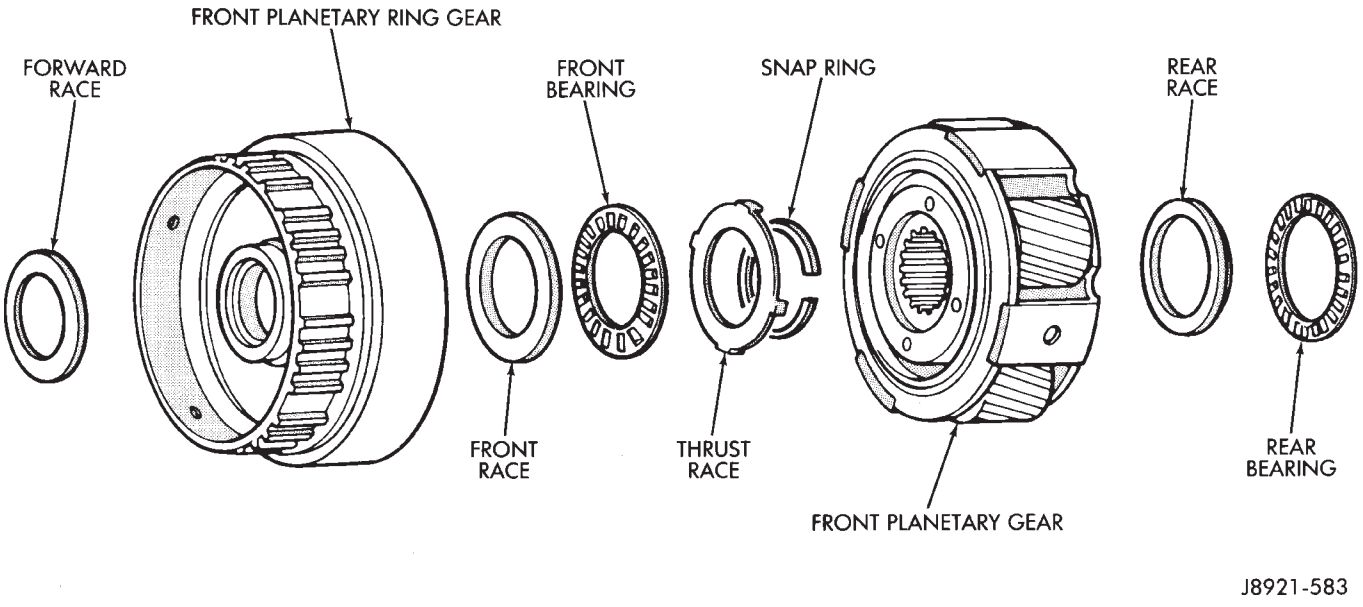

Fig. 1 Front Planetary Gear Components

FRONT PLANETARY GEAR OVERHAUL

FRONT PLANETARY DISASSEMBLY

(1) Remove ring gear from planetary gear (Fig. 1).

(2) Remove front bearing and the two races from ring gear (FIg. 1).

(3) Remove tabbed thrust race from planetary gear (Fig. 1).

(4) Remove snap ring attaching planetary gear to shaft and remove gear.

(5) Remove rear bearing and race from planetary gear.

(6) Measure inside diameter of ring gear bushing. Maximum allowable diameter is 24.08 mm (0.9480 in.). Replace ring gear if bushing inside diameter is greater than specified.

FRONT PLANETARY ASSEMBLY

(1) Lubricate planetary and ring gear bearings and races with petroleum jelly.

(2) Identify planetary bearings and races before installation. (Fig. 1). Bearings and races can be identified by following dimensions:

- Outer diameter of rear bearing is 47.7 mm (1.878 in.). Inner diameter is 35.5 mm (1.398 in.).
- Outer diameter of rear race 47.6 mm (1.874 in.). Inner diameter is 33.7 mm (1.327 in.).
- Outer diameter of front race is 53.6 mm (2.110 in.). Inner diameter is 30.5 mm (1.201 in.).
- Outer diameter of front bearing is 47.7 mm (1.878 in.). Inner diameter is 32.6 (1.283 in.).
- Outer diameter of forward race is 47.0 mm (1.850 in.). Inner diameter is 26.5 mm 1.043 in.).

(3) Install rear race and bearing in gear (Fig. 2).

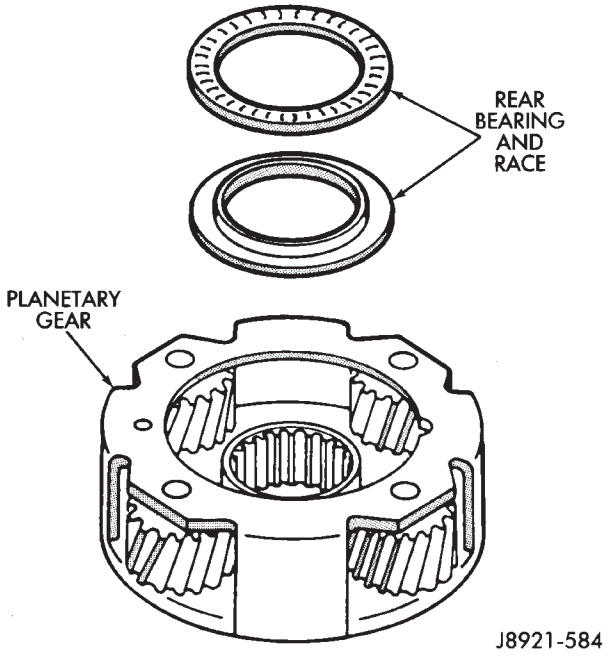

Fig. 2 Installing Front Planetary Rear Bearing and Race

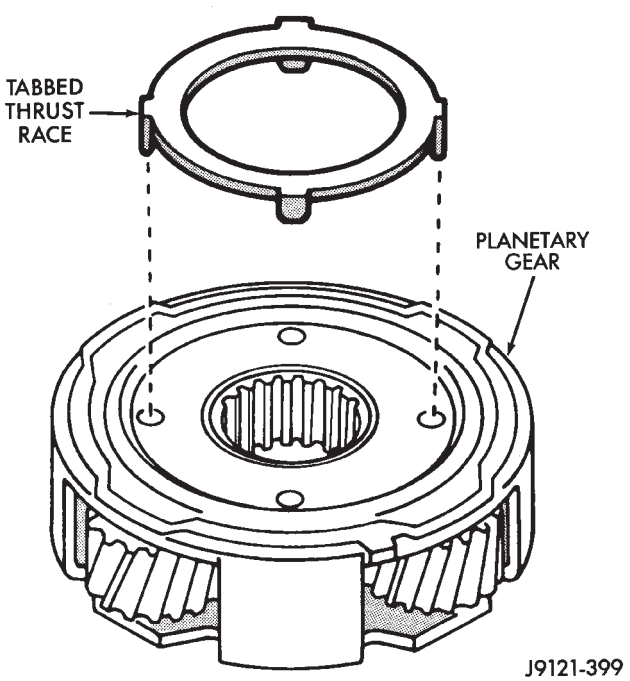

Fig. 3 Installing Front Planetary Thrust Race

(4) Turn planetary over and install thrust race (Fig. 3).

(5) Install front race and bearing and forward race in ring gear (Fig. 4).

(6) Set planetary gear assembly aside for final assembly.

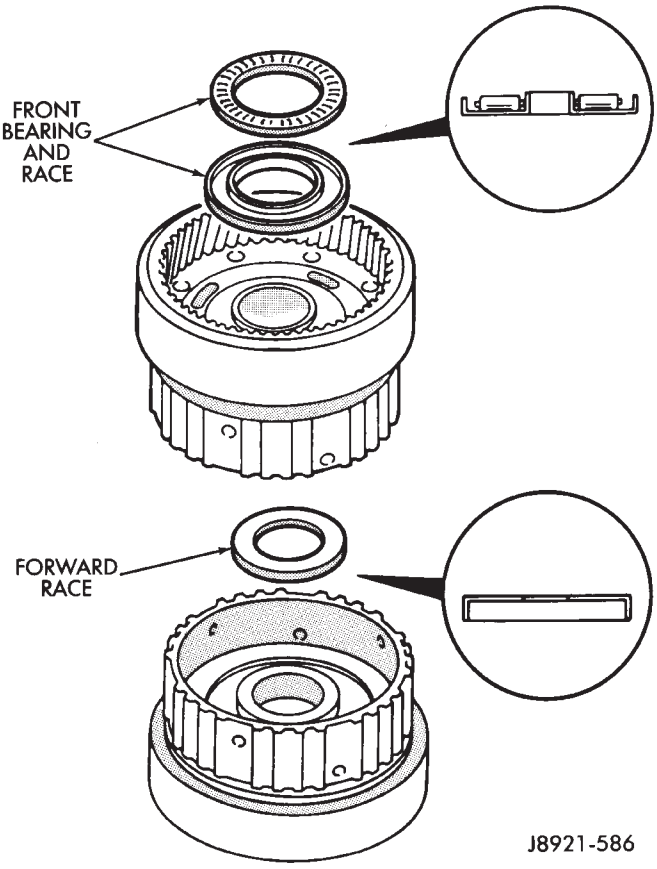

Fig. 4 Installing Front Planetary Front Bearing And Races

SUN GEAR AND NO. 1 ONE-WAY CLUTCH OVERHAUL

SUN GEAR AND CLUTCH DISASSEMBLY

(1) Hold sun gear and turn second brake hub clockwise and counterclockwise (Fig. 2). Hub should rotate freely clockwise but lock when turned counterclockwise. Replace one-way clutch and hub if they do not operate properly.

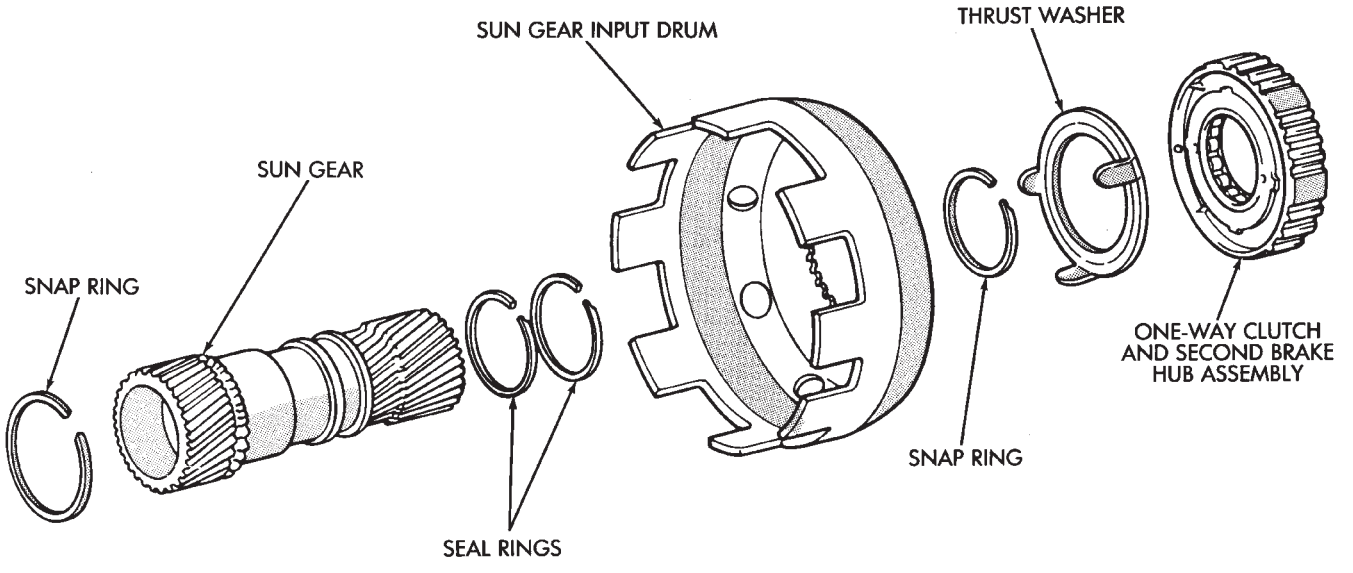

Fig. 1 Sun Gear And One-Way Clutch Components

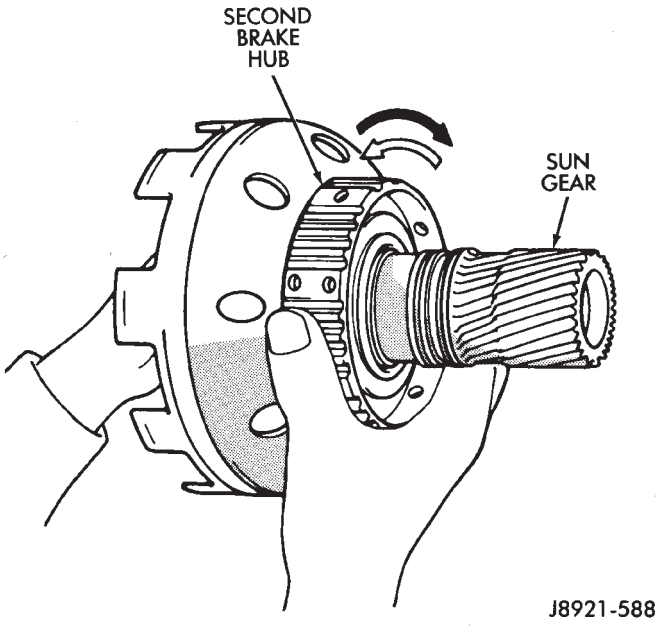

Fig. 2 Checking One-Way Clutch Operation

(2) Remove one-way clutch/second brake hub assembly from drum (Fig. 3).

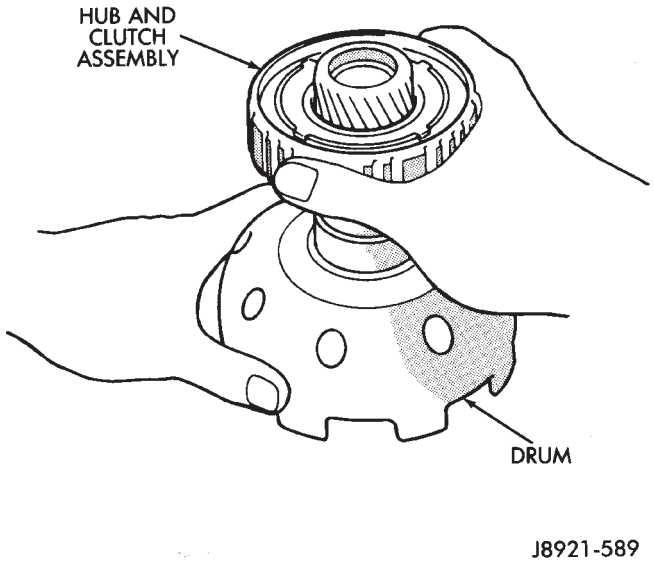

Fig. 3 Removing/Installing Brake Hub And Clutch Assembly

(3) Remove thrust washer from drum (Fig. 4).

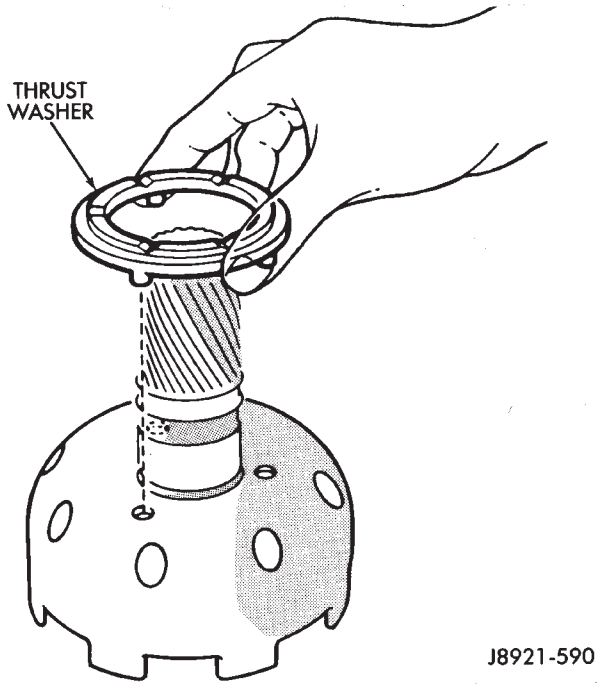

Fig. 4 Removing/Installing Thrust Washer

(4) Remove two seal rings from sun gear (Fig. 5).

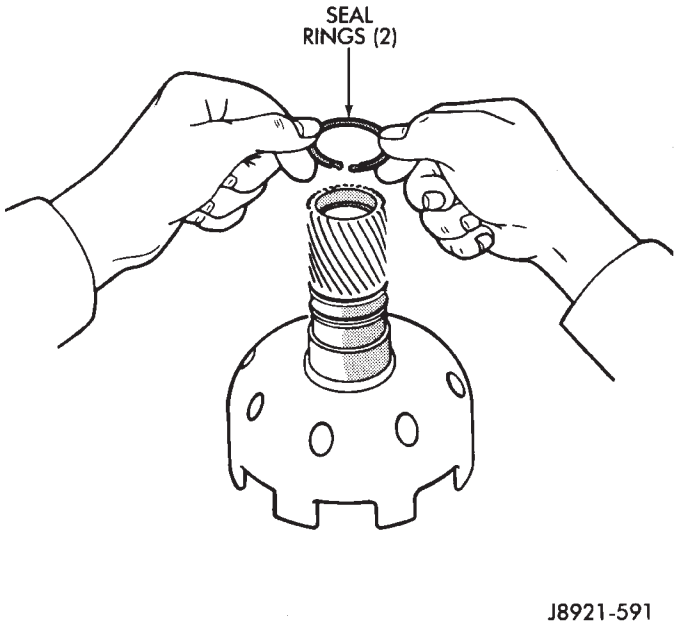

Fig. 5 Removing/Installing Sun Gear Seal Rings

(5) Support sun gear on wood block (Fig. 6). Then remove first sun gear snap ring and separate drum from gear.

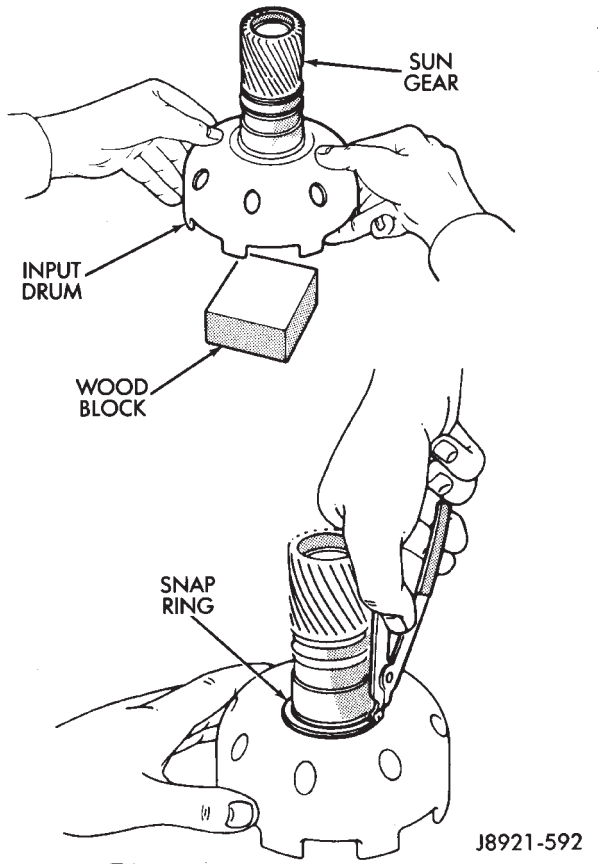

Fig. 6 Removing/Installing Sun Gear

(6) Remove remaining snap ring from sun gear (Fig. 7).

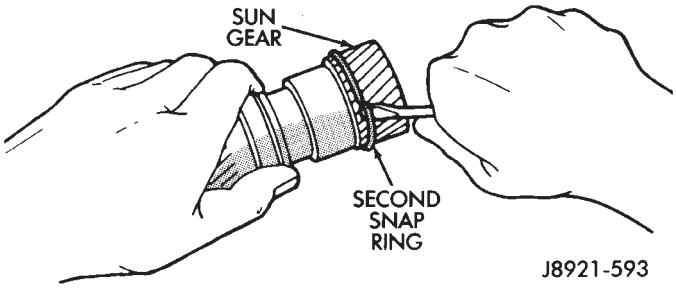

Fig. 7 Removing/Installing Second Snap Ring

(7) Measure inside diameter of sun gear bushings with bore gauge or inside micrometer (Fig. 8). Maximum allowable diameter is 27.08 mm (1.0661 in.). Replace sun gear if bushing inside diameter is greater than specified.

SUN GEAR AND CLUTCH ASSEMBLY

(1) Install first snap ring on sun gear.

(2) Install sun gear in drum and install remaining snap ring.

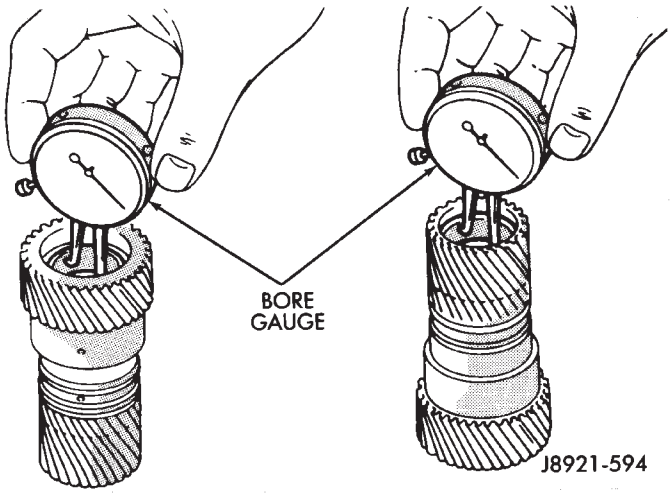

Fig. 8 Checking Sun Gear Bushings

(3) Coat replacement seal rings with petroleum jelly and install them on sun gear. **Be sure seal ring ends are interlocked.**

(4) Install thrust washer. Be sure washer tabs are seated in drum slots.

(5) Install one-way clutch/second brake hub assembly on sun gear. Deep side of hub flange faces upward (Fig. 9).

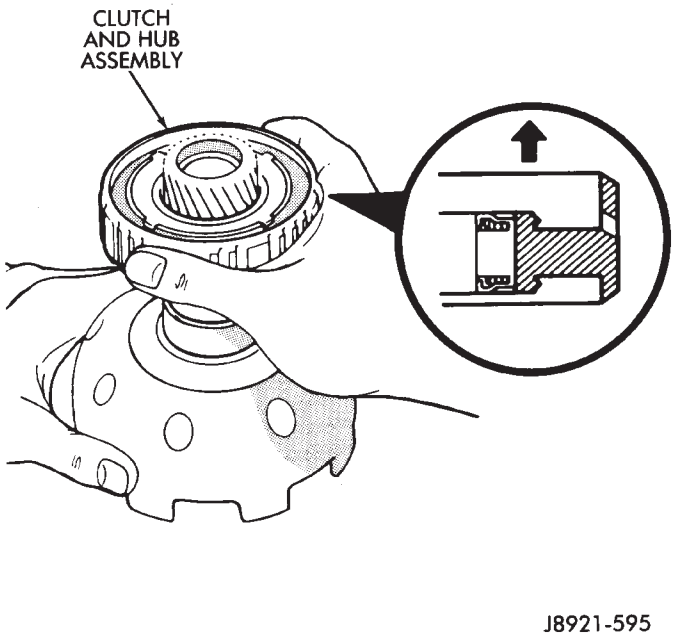

Fig. 9 Installing Clutch And Hub Assembly On Sun Gear

(6) Check one-way clutch operation again (Fig. 2). Hold sun gear and turn second brake hub clockwise and counterclockwise. Hub should turn clockwise freely, but lock when turned counterclockwise.

(7) Set sun gear/clutch assembly aside for final assembly.

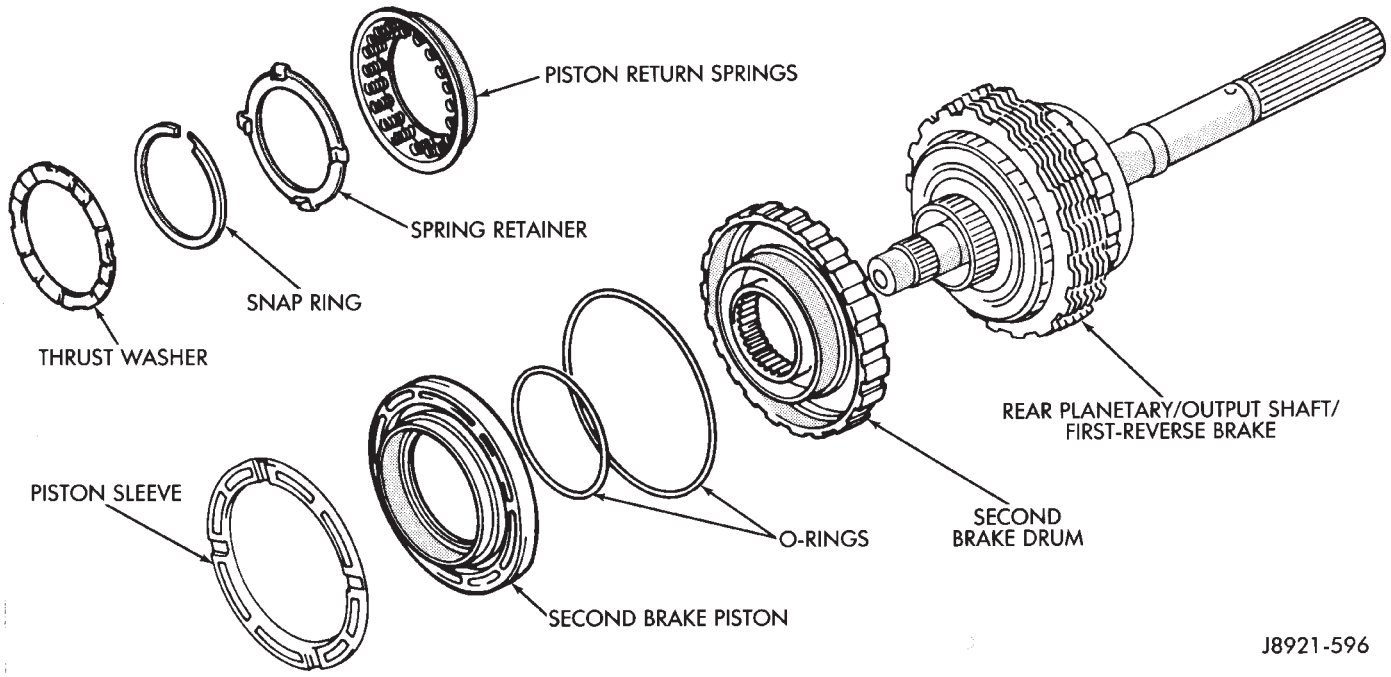

Fig. 1 Second Brake Components

SECOND BRAKE OVERHAUL

BRAKE DISASSEMBLY

(1) Remove second brake drum from output shaft (Fig. 2).

(2) Set output shaft assembly aside for overhaul. Refer to Rear Planetary Gear and Output Shaft Overhaul procedures.

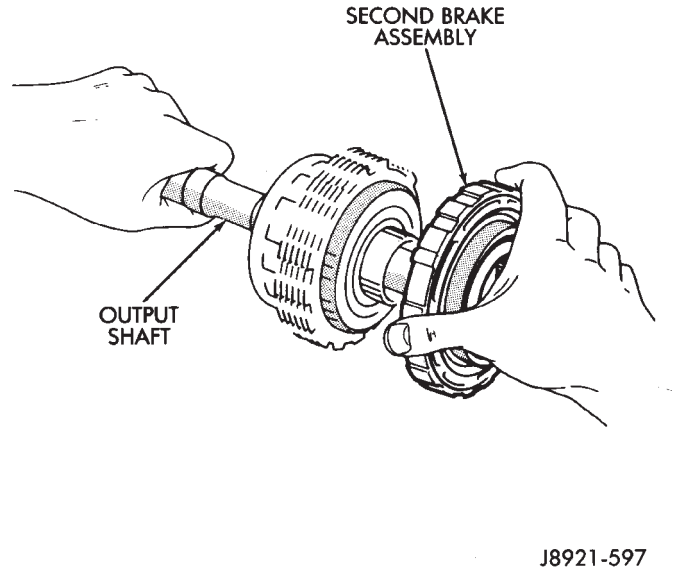

Fig. 2 Removing/Installing Second Brake Assembly

(3) Remove thrust washer from second brake drum (Fig. 3).

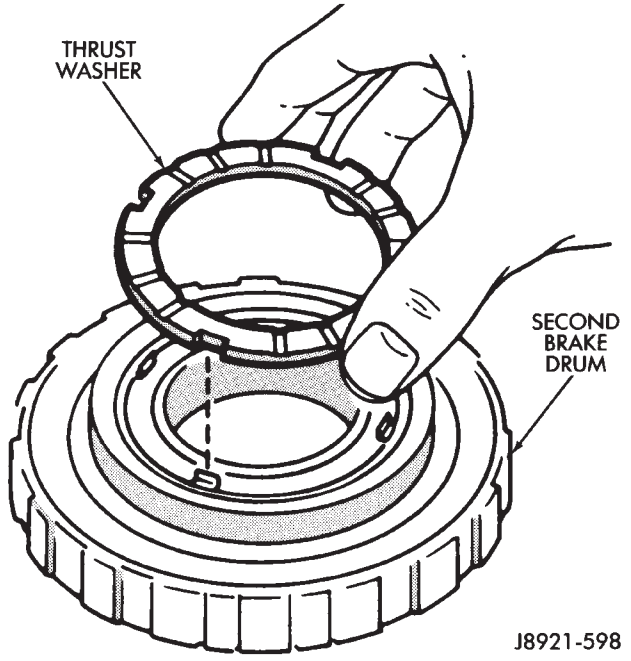

Fig. 3 Removing/Installing Second Brake Drum Thrust Washer

(4) Compress piston return springs with shop press and tool 7538. Then remove piston snap ring (Fig. 4).

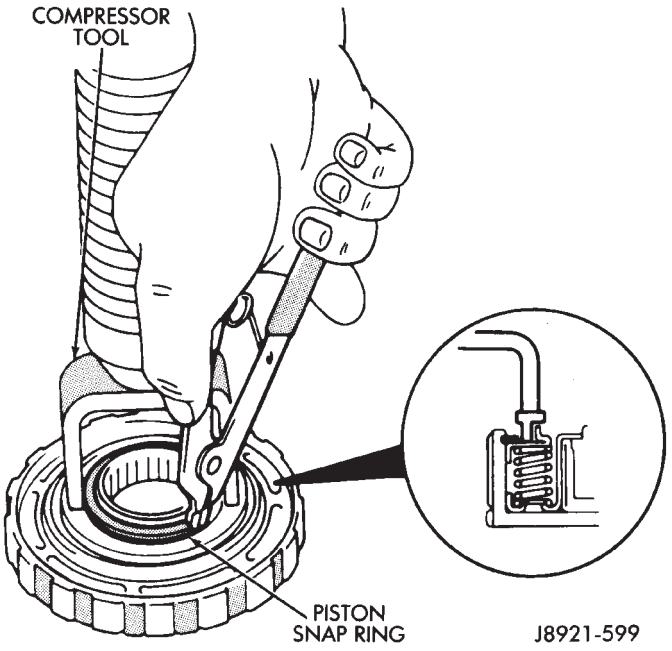

Fig. 4 Removing/Installing Second Brake Piston Snap Ring

(5) Remove compressor tool and remove spring retainer and return springs.

(6) Remove second brake piston and sleeve from drum with compressed air (Fig. 5). Use only enough air pressure to ease piston out of drum.

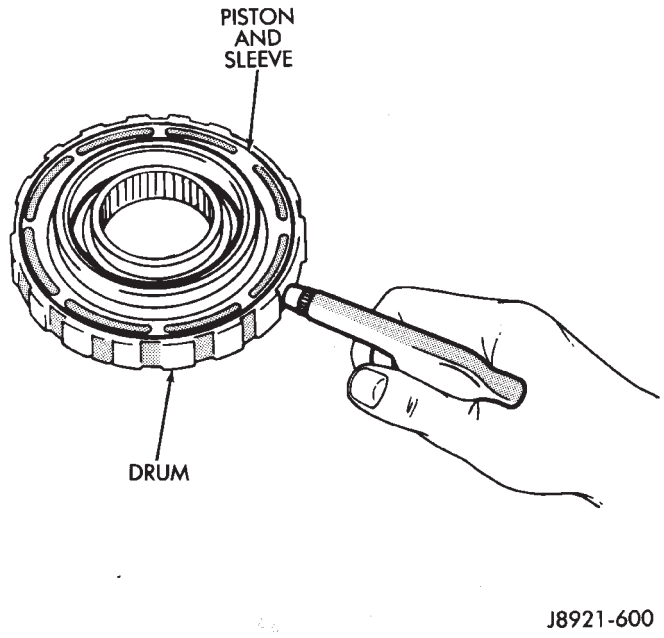

Fig. 5 Removing/Installing Piston And Sleeve

(7) Remove and discard brake piston O-rings.

(8) Measure free length of piston return springs with springs mounted in retainer (Fig. 6). Length should be approximately 16.05 mm (0.632 in.). Replace return springs if length is less than specified.

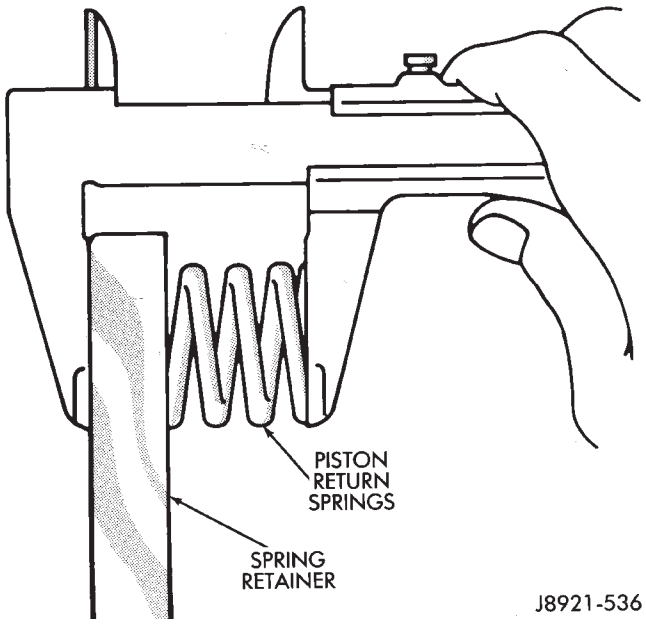

Fig. 6 Measuring Second Brake Piston Return Springs

SECOND BRAKE ASSEMBLY

(1) Lubricate and install new O-rings on brake piston. Then install brake piston in drum.

(2) Install return springs and retainer on brake piston.

(3) Compress return springs with shop press and Compressor Tool 7538. Install piston snap ring and remove brake assembly from press.

(4) Check brake piston operation with low pressure compressed air (Fig. 7). Apply air pressure through feed hole in drum. Piston should move smoothly when applying-releasing air pressure.

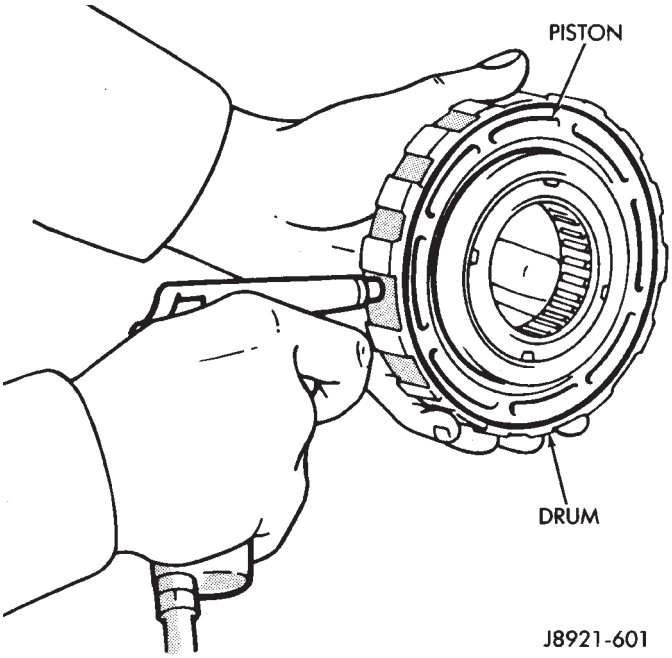

Fig. 7 Checking Second Brake Piston Operation

(5) Coat thrust washer with petroleum jelly and install it in drum. Be sure washer notches are aligned with tabs on spring retainer (Fig. 8).

(6) Set brake components aside for final assembly.

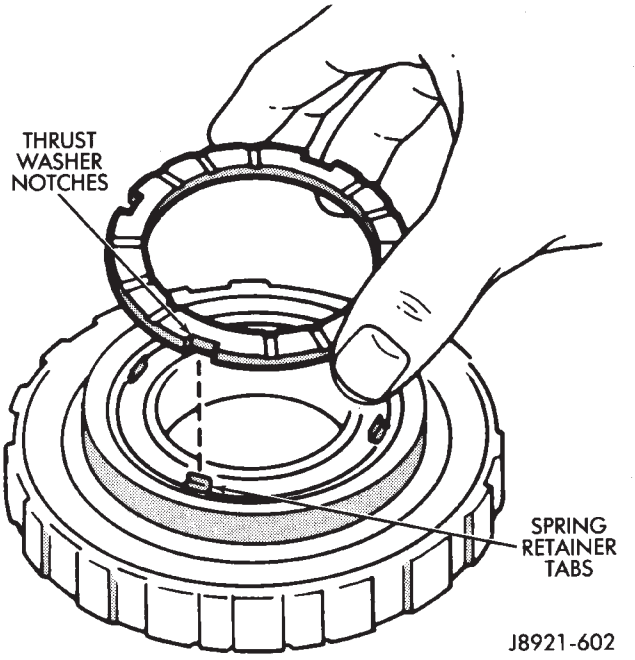

Fig. 8 Installing Second Brake Thrust Washer

REAR PLANETARY, NO. 2 ONE-WAY CLUTCH AND OUTPUT SHAFT OVERHAUL

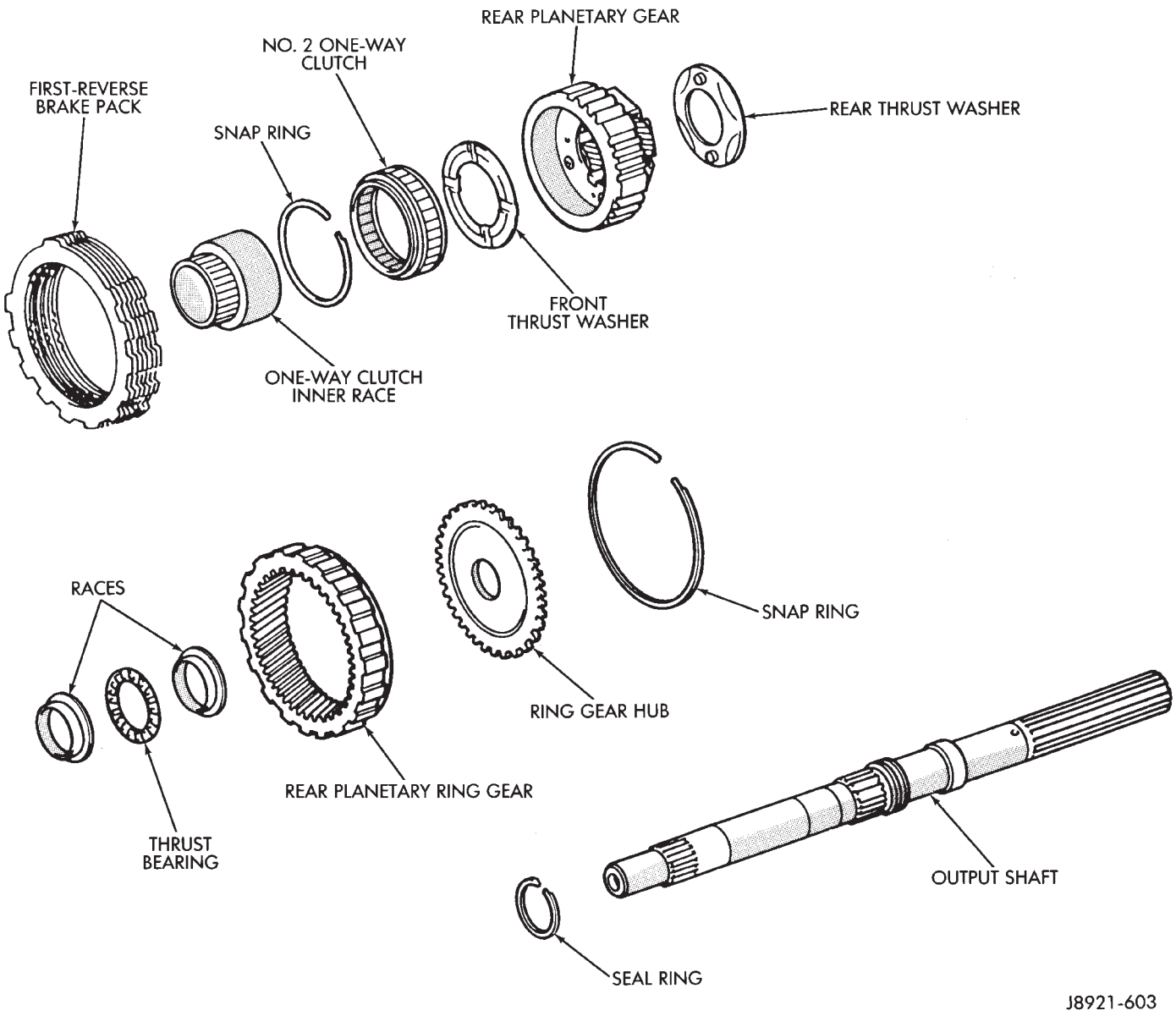

Fig. 1 Rear Planetary, Brake Pack, Clutch And Output Shaft Components

PLANETARY/BRAKE PACK/OUTPUT SHAFT DISASSEMBLY

(1) Remove output shaft from gear assembly (Fig. 2).

(2) Remove and discard shaft seal ring (Fig. 4).

(3) Remove brake pack from planetary gear (Fig. 4).

(4) Measure thickness of each brake pack disc. Minimum thickness is 1.51 mm (0.0594 in.). Replace all discs if any disc is thinner than specified.

(5) Remove planetary gear from ring gear (Fig. 5).

(6) Check No. 2 one-way clutch. Hold planetary gear and turn clutch inner race in both directions.

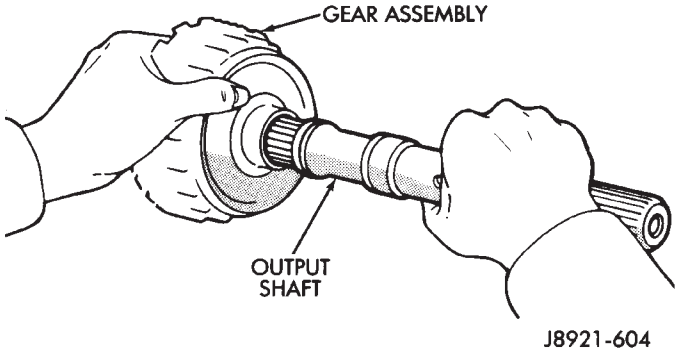

Fig. 2 Removing/Installing Output Shaft

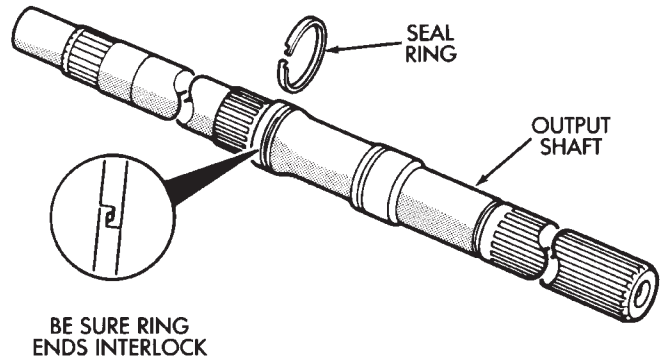

Fig. 3 Removing/Installing Shaft Seal Ring

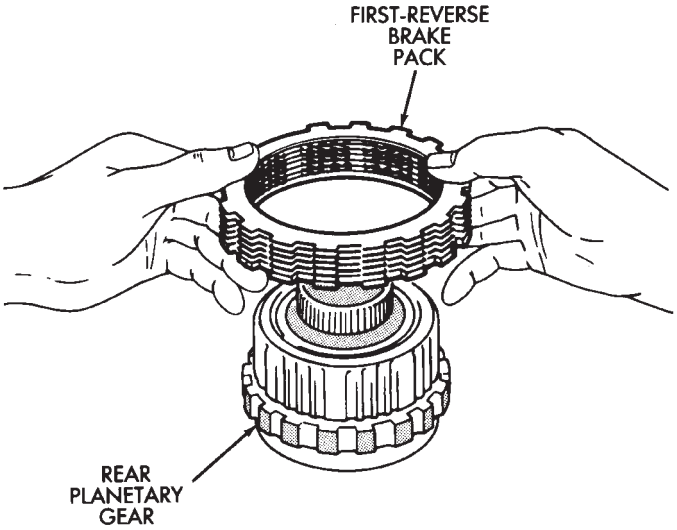

Fig. 4 Removing/Installing First-Reverse Brake Pack

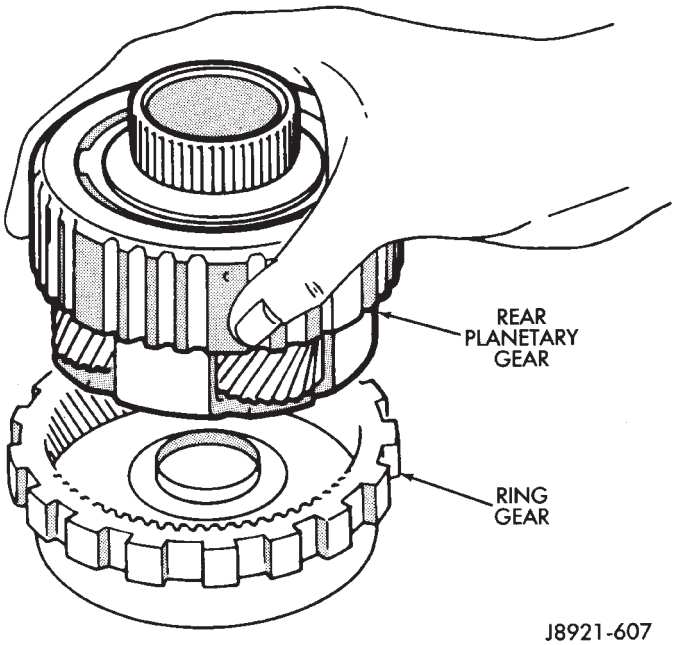

Fig. 5 Removing/Installing Rear Planetary

Race should turn freely counterclockwise, but lock when turned clockwise. Replace one-way clutch if necessary.

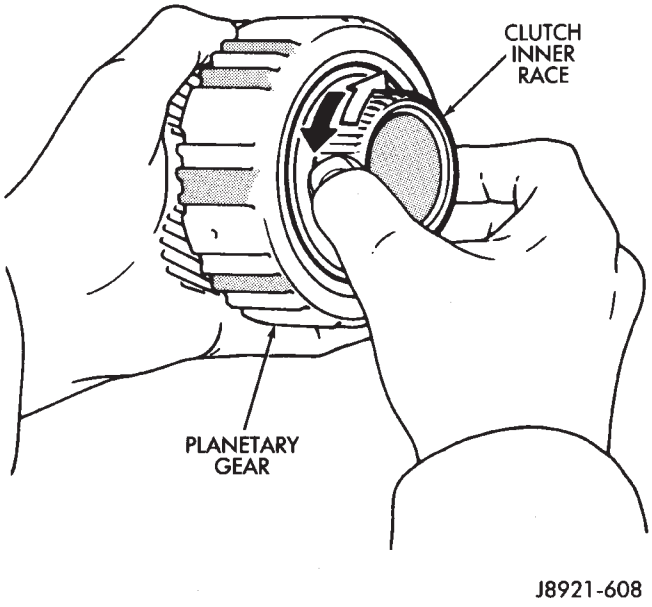

Fig. 6 Checking No. 2 One-Way Clutch Operation

(7) Remove clutch inner race from planetary gear (Fig. 7).

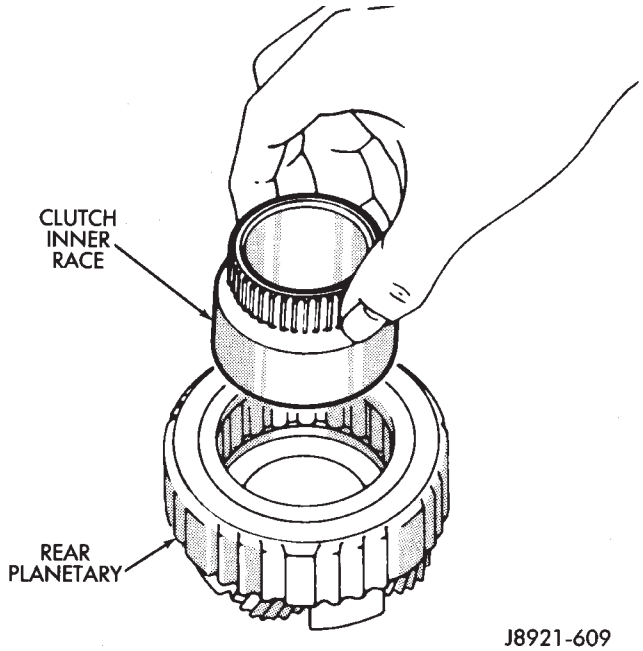

Fig. 7 Removing/Installing Clutch Inner Race

(8) Remove clutch snap ring and remove No. 2 one-way clutch from planetary (Fig. 8).

(9) Remove front and rear thrust washers from planetary gear (Fig. 9).

(10) Remove thrust bearing and washers from ring gear (Fig. 10).

(11) Remove ring gear snap ring and remove ring gear hub (Fig. 11).

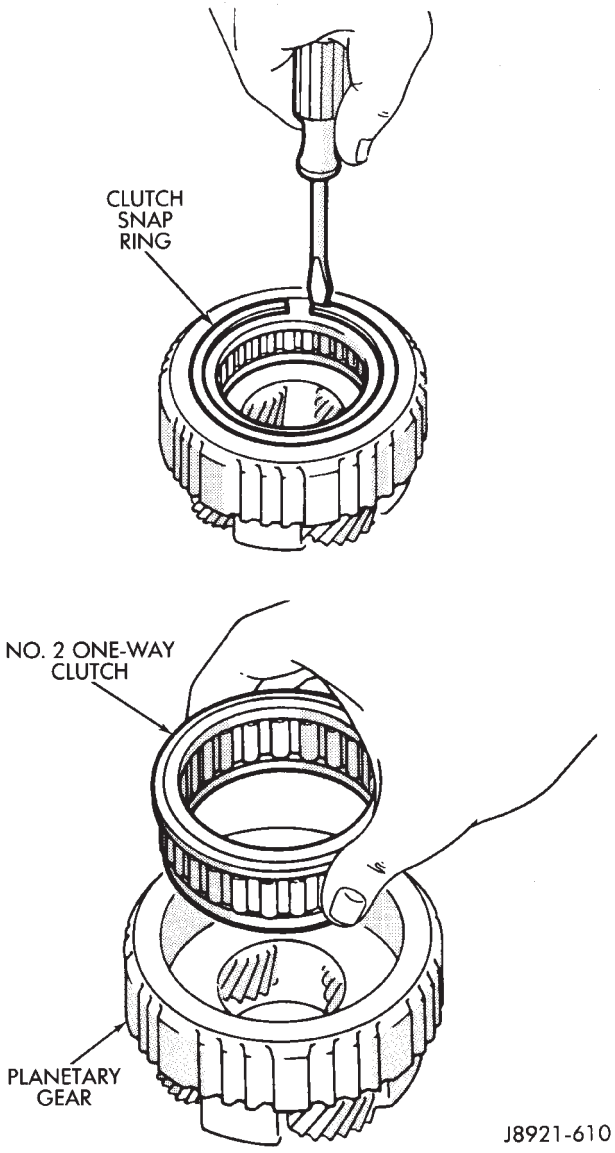

Fig. 8 Removing.Installing One-Way Clutch

(12) Inspect and replace any worn or damaged planetary gear components.

ASSEMBLING REAR PLANETARY, BRAKE PACK, CLUTCH AND SHAFT

(1) Install hub and snap ring in ring gear (Fig. 11)

(2) Identify ring gear thrust bearing and races by following dimensions (Fig. 10):

- Outer diameter of bottom race is 44.8 mm (1.764 in.) and inner diameter is 27.6 mm (1.087 in.).
- Outer diameter of bearing is 44.7 mm (1.760 in.) and inner diameter is 30.1 mm (1.185 in.).
- Outer diameter of upper race is 44.8 mm (1.764 in.) and inner diameter is 28.8 mm (1.134 in.).

(3) Lubricate ring gear thrust bearing and races with petroleum jelly and install them in ring gear (Fig. 10).

(4) Coat planetary thrust washers with petroleum jelly and install them in gear (Fig. 9).

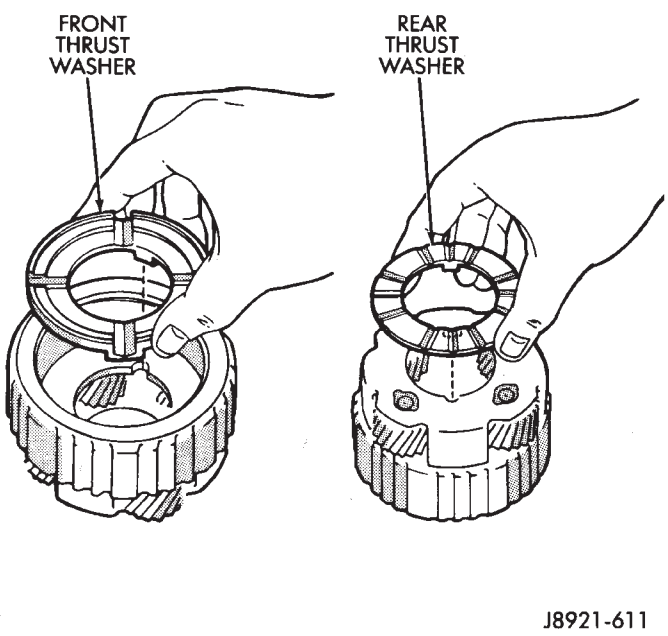

Fig. 9 Removing/Installing Rear Planetary Thrust Washers

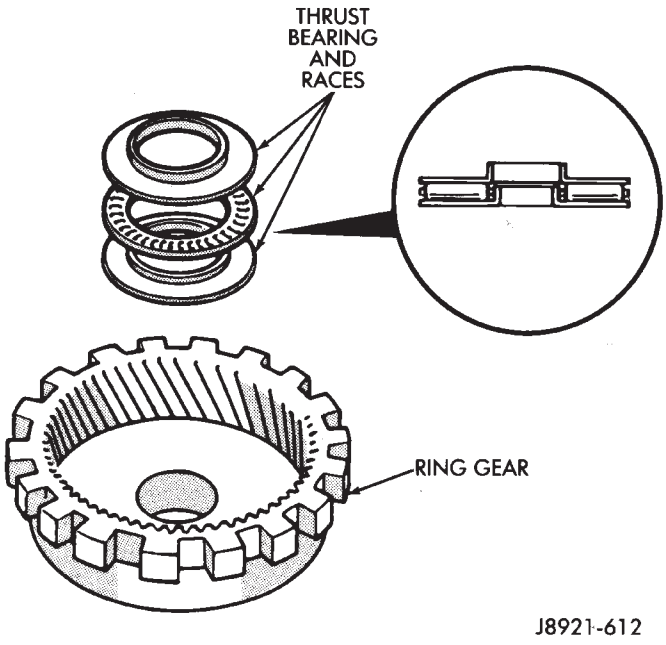

Fig. 10 Removing/Installing Ring Gear Thrust Bearing And Races

(5) Install No. 2 one-way clutch in planetary gear. Be sure flanged side of clutch faces upward (Fig. 12).

(6) Install clutch retaining snap ring and install clutch inner race (Fig. 7). Turn race counterclockwise to ease installation.

(7) Verify one-way clutch operation. Hold gear and turn inner race in both directions. Race should turn freely counterclockwise, but lock when turned clockwise.

(8) Install planetary gear in ring gear.

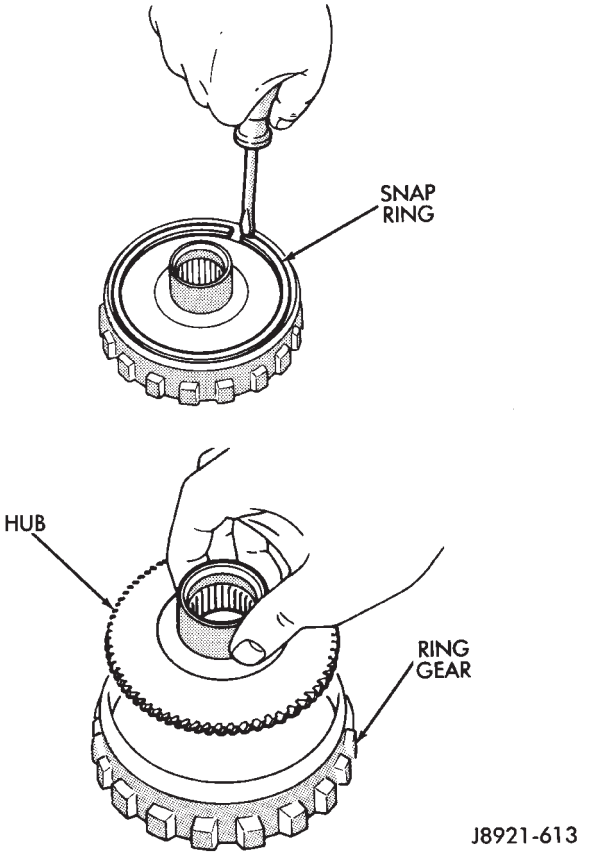

Fig. 11 Removing/Installing Ring Gear Hub

(9) Assemble clutch discs and clutch plates (Fig. 4). Sequence is disc first, then a plate. Use seven discs and plates in a 6-cyl. transmission.

(10) Install brake pack on planetary gear (Fig. 4).

(11) Install new seal ring on output shaft (Fig. 3). Be sure ring ends are interlocked as shown.

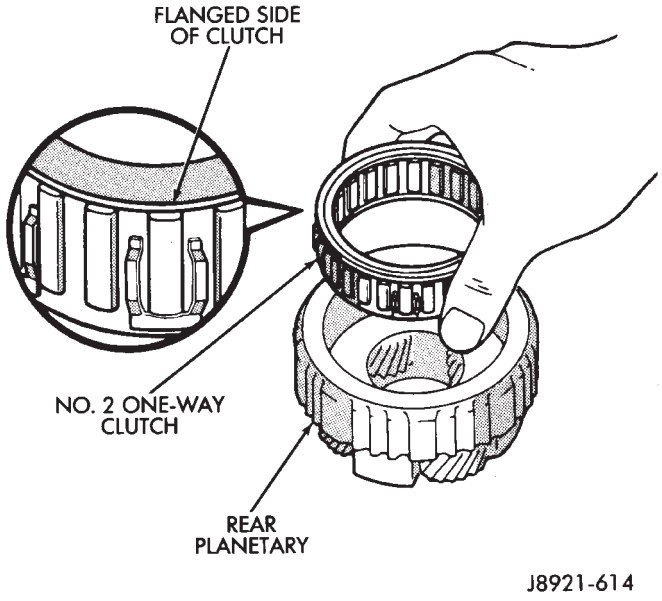

Fig. 12 Installing No. 2 One-Way Clutch

(12) Set assembled components aside for final assembly.

FIRST-REVERSE BRAKE PISTON AND TRANSMISSION CASE OVERHAUL

BRAKE DISASSEMBLY AND INSPECTION

(1) Remove bearing and race assembly from transmission case (Fig. 2).

(2) Check first/reverse brake piston operation with compressed air (Fig. 3). Piston should move smoothly and not bind or stick. If piston operation is incorrect, case or piston may require replacement.

(3) Compress piston return springs with Tool 7539 and remove piston snap ring (Fig. 4).

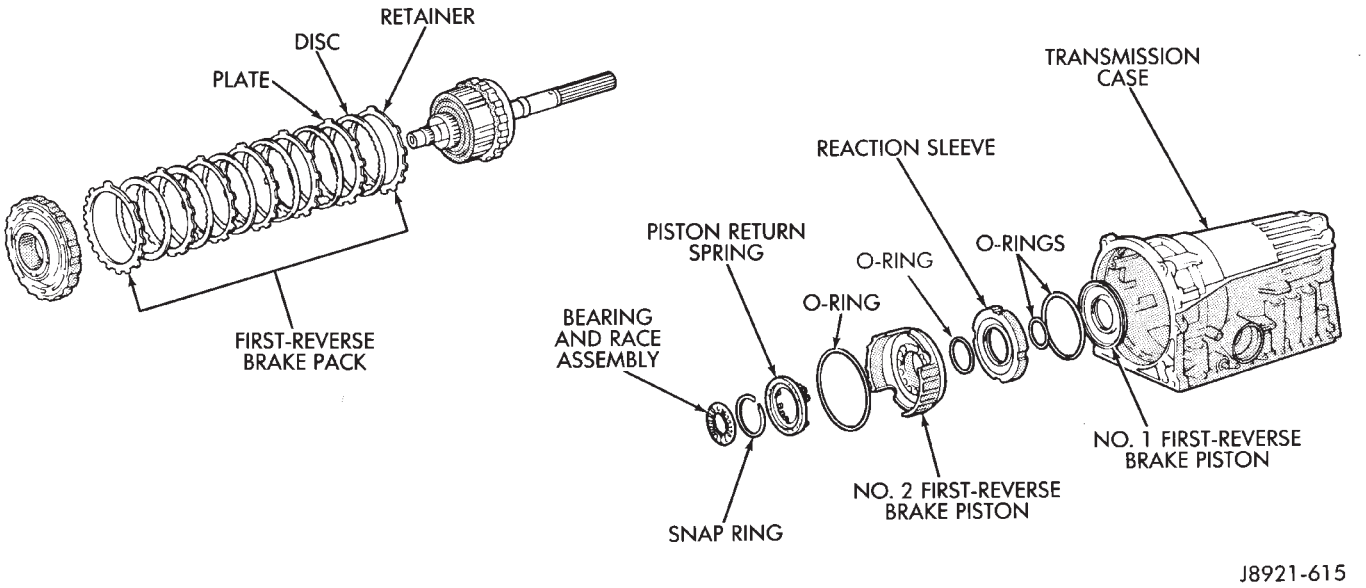

Fig. 1 First-Reverse Brake Pistons And Transmission Case

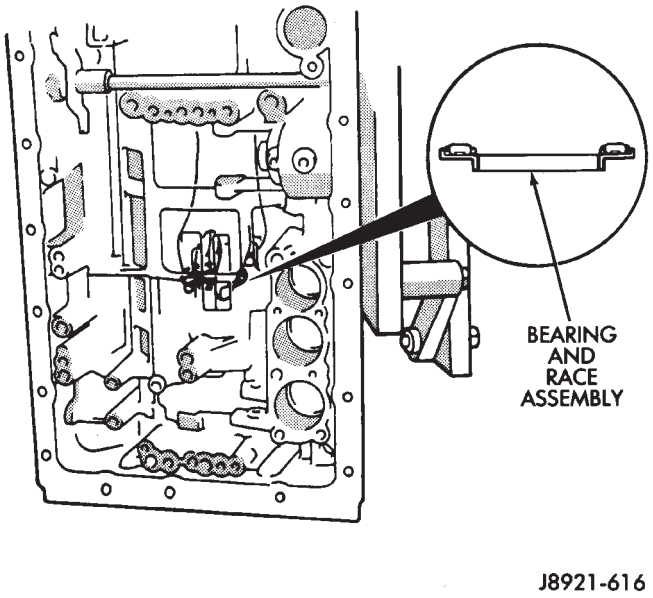

Fig. 2 Removing/Installing Bearing And Race Assembly

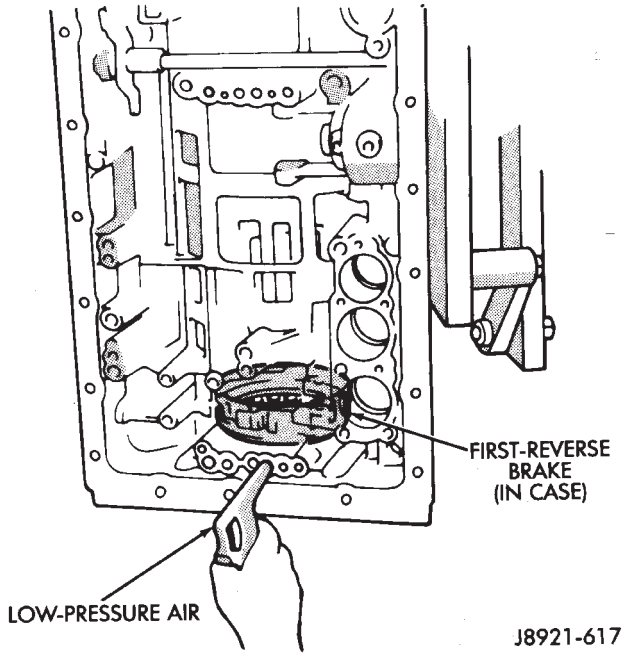

Fig. 3 Checking First-Reverse Brake Piston Operation

(4) Remove Tool 7539 and remove piston return springs.

(5) Remove No. 2 first-reverse brake piston with compressed air. Apply air through same transmission feed hole used for checking piston operation.

(6) Remove reaction sleeve with Sleeve Remover Tool 7542 (Fig. 5). Insert tool flanges under sleeve and lift tool and sleeve out of case.

(7) Remove No. 1 first/reverse brake piston with Piston Puller 7543 (Fig. 6). Slip tool under piston and lift tool and piston out of case.

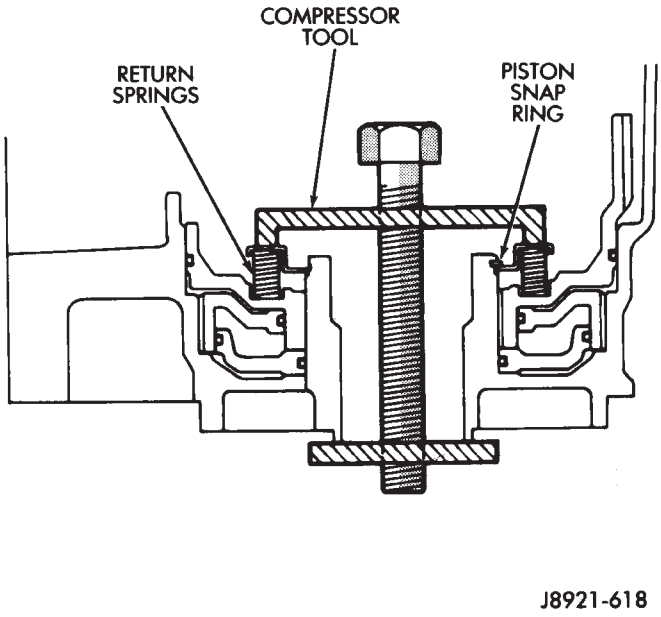

Fig. 4 Removing/Installing Piston Snap Ring

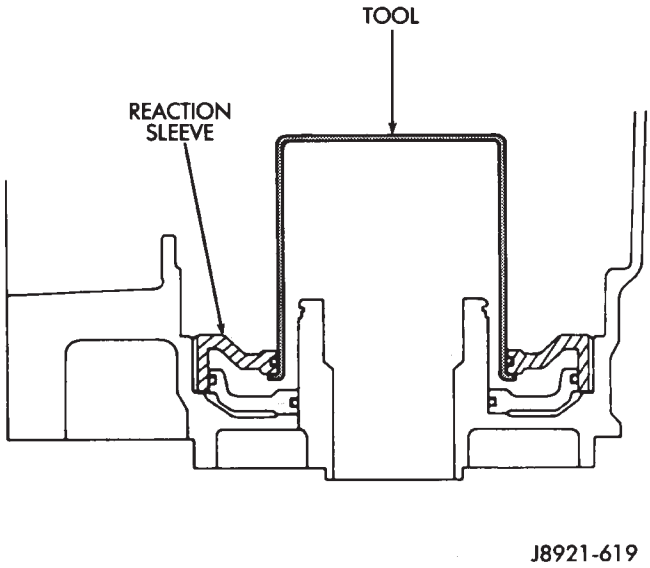

Fig. 5 Removing/Installing Reaction Sleeve

(8) Measure free length of piston return springs with springs mounted in retainer. Length should be 18.382 mm (0.724 in.). Replace springs if length is less than this.

(9) Clean transmission case thoroughly with solvent and dry it with compressed air. Blow compressed air through oil feed passages to remove solvent residue and ensure that passages are clear. Inspect the case for wear or damage. Replace case if necessary.

ASSEMBLING FIRST/REVERSE BRAKE PISTON

(1) Lubricate and install new O-rings on No. 1 first/reverse brake piston and on reaction sleeve (Fig. 7). Then install piston in sleeve.

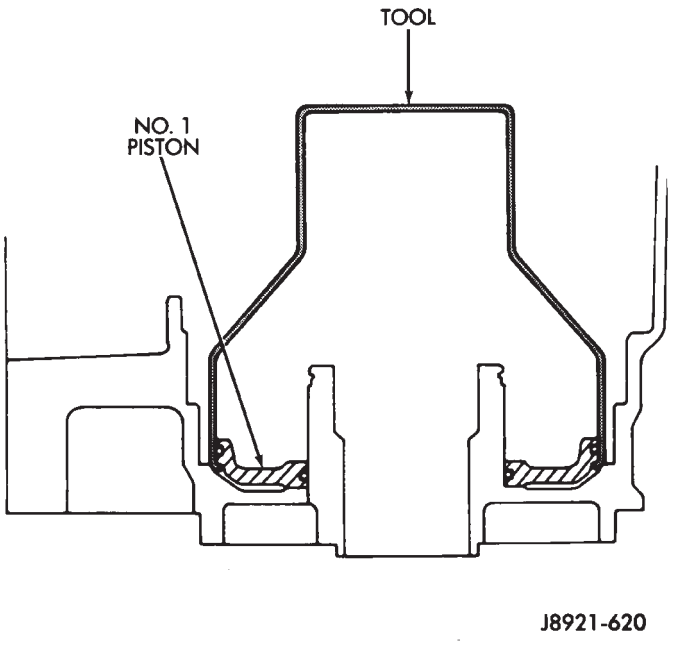

Fig. 6 Removing/Installing First-Reverse Brake No.1 Piston

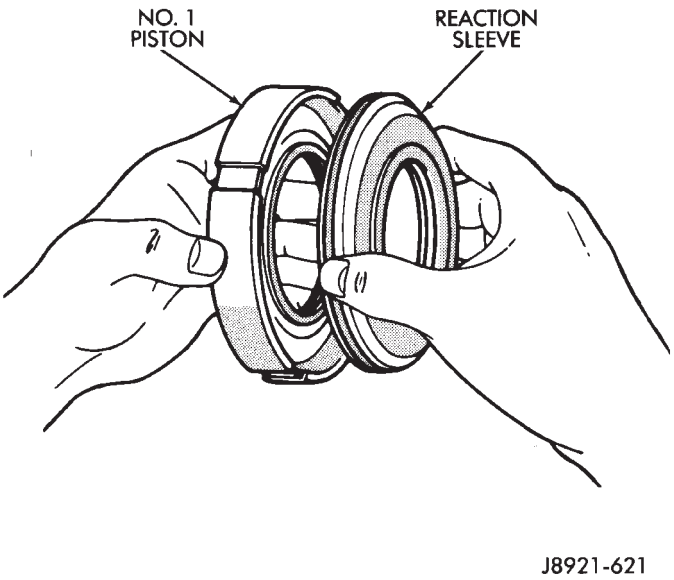

Fig. 7 Assembling No. 1 Piston And Sleeve

(2) Lubricate and install new O-ring on No. 2 brake piston.

(3) Install assembled No. 1 piston and reaction sleeve on No. 2 piston (Fig. 8).

(4) Lubricate and install piston assembly in case (Fig. 9). Align piston and case slots and press piston assembly into case with hand pressure.

(5) Position piston return springs on No. 2 piston.

(6) Compress piston return springs with Tool 7539 and install piston snap ring (Fig. 4). Be sure snap ring end gap is not aligned with any tangs on return spring retainer.

(7) Verify piston operation with compressed air as outlined in disassembly procedure.

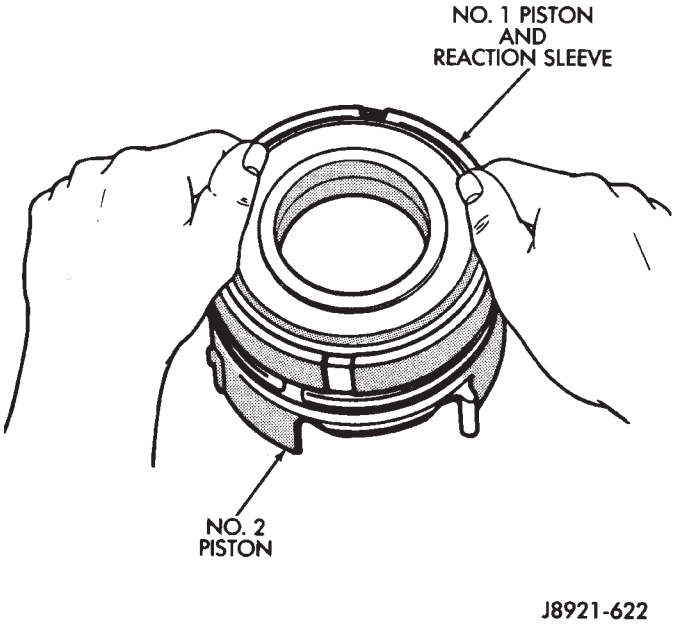

Fig. 8 Assembling First-Reverse Brake Pistons

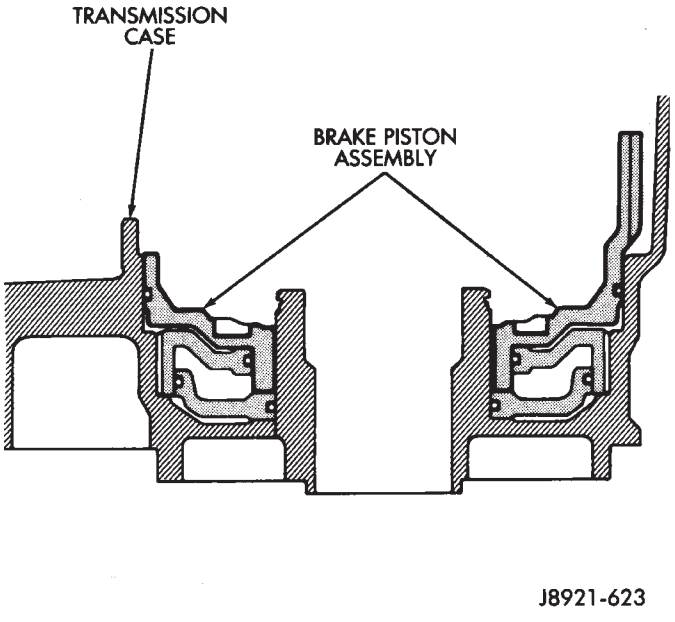

Fig. 9 Installing First-Reverse Brake Piston Assembly

(8) Coat bearing and race assembly with petroleum jelly and install it in piston assembly (Fig. 2). Bearing and race assembly outer diameter is 57.7 mm (2.272 in.) and inner diameter is 39.2 mm (1.543 in.).

TRANSMISSION VALVE BODY OVERHAUL

The valve body assembly consists of two sections which are the upper body and lower body (Figures 1 and 2). Disassembly, inspection and overhaul procedures for each section are outlined separately. Refer to the appropriate procedure as needed.

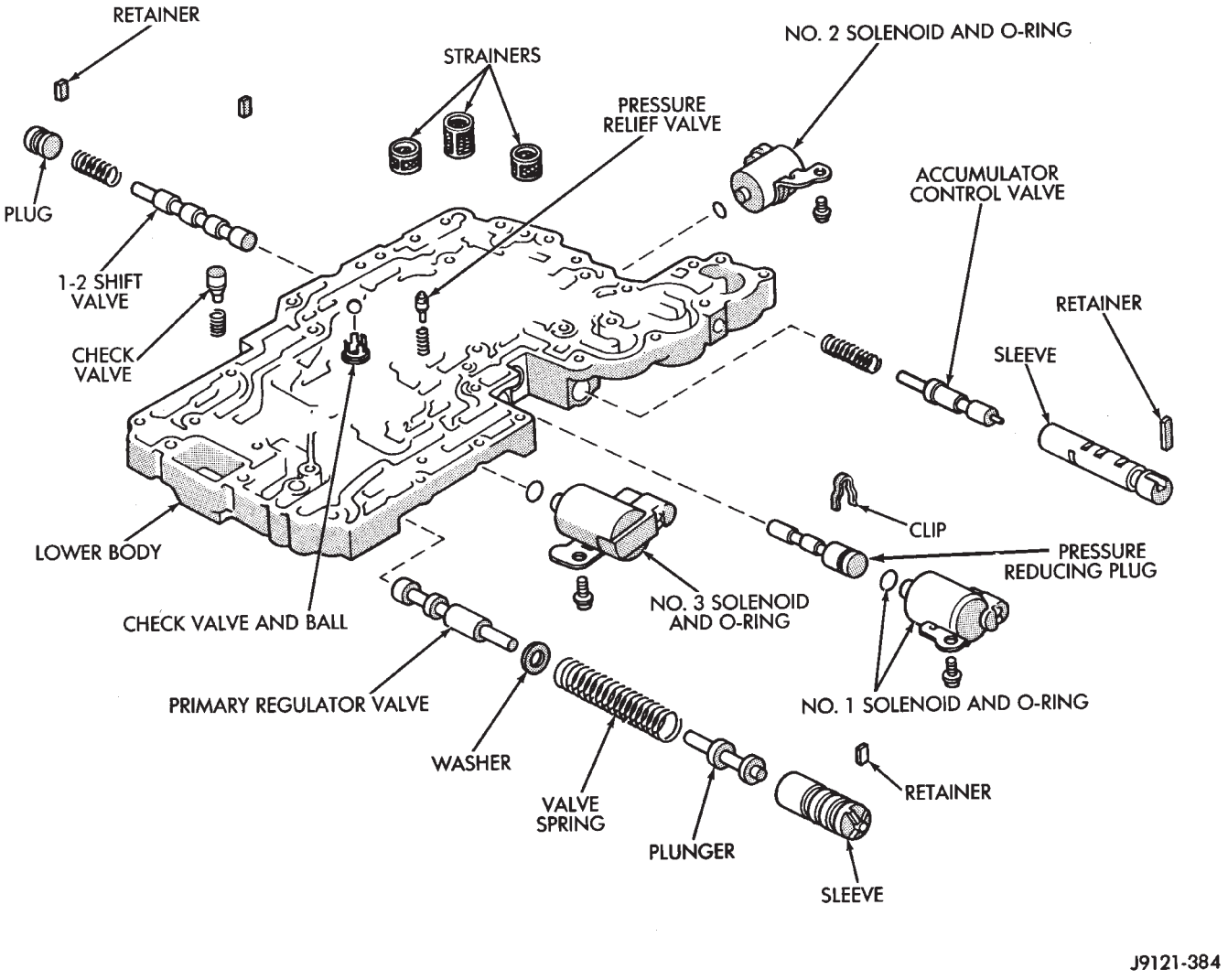

Fig. 1 Lower Body Components

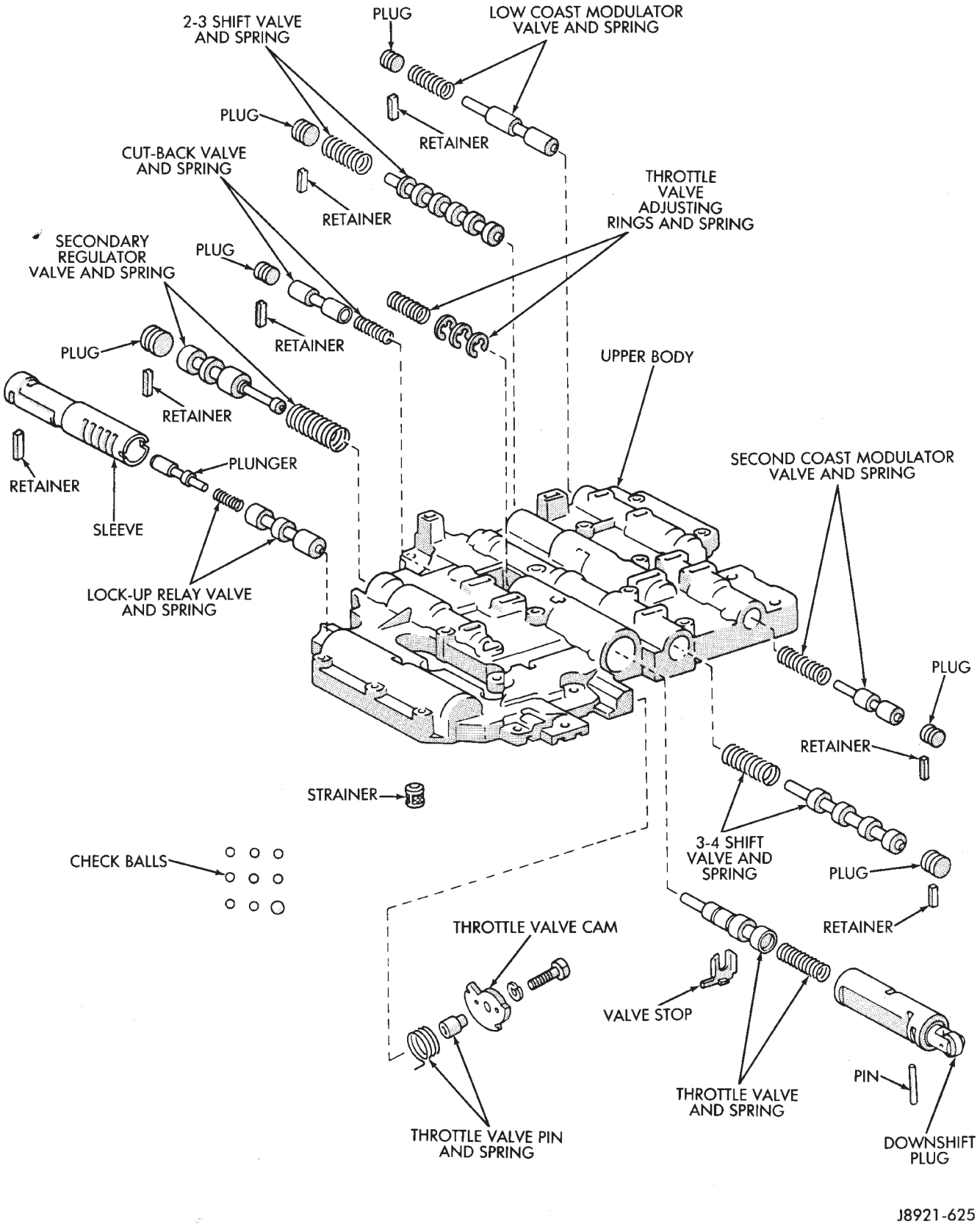

Fig. 2 Upper Body Components

REMOVING UPPER BODY FROM LOWER BODY

(1) Remove two-piece detent spring (Fig. 3). Note position of spring sections for assembly reference.

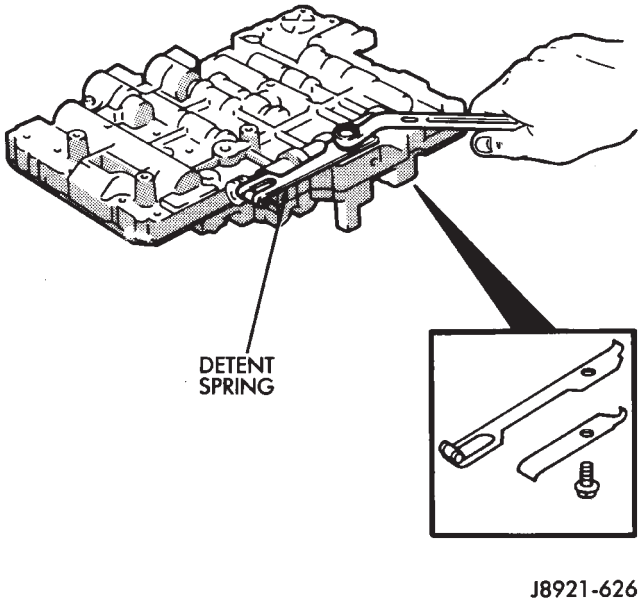

Fig. 3 Removing/Installing Detent Spring

(2) Remove manual valve from lower body (Fig. 4).

(3) Remove bolts attaching upper body to lower

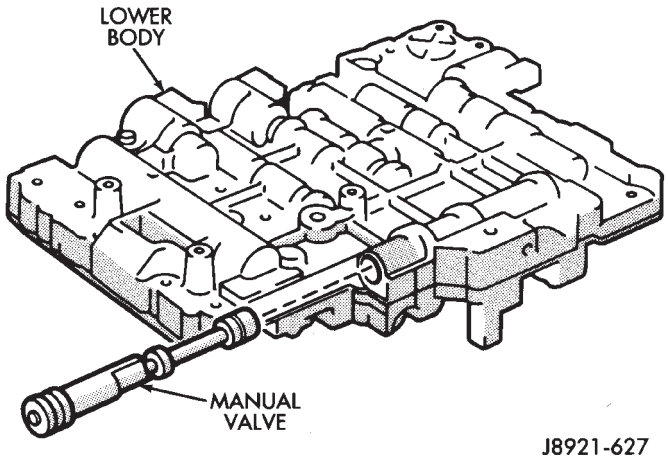

Fig. 4 Removing/Installing Manual Valve

body (Fig. 5).

(4) Carefully lift and remove upper body, plate and gaskets from lower body (Fig. 6).

(5) Disassemble and overhaul upper and lower body sections as outlined in following procedures.

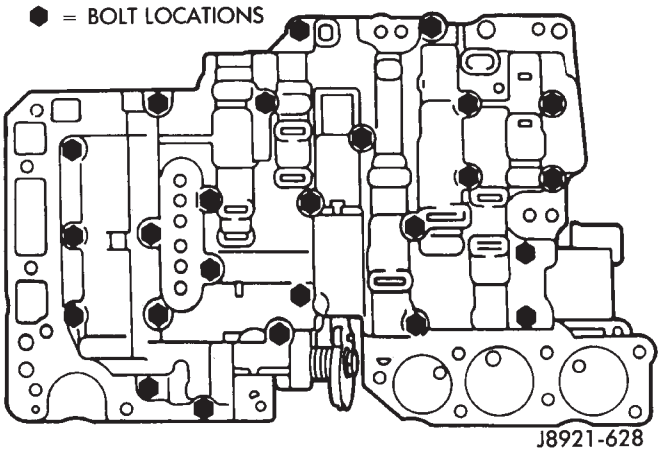

Fig. 5 Valve Body Bolt Locations

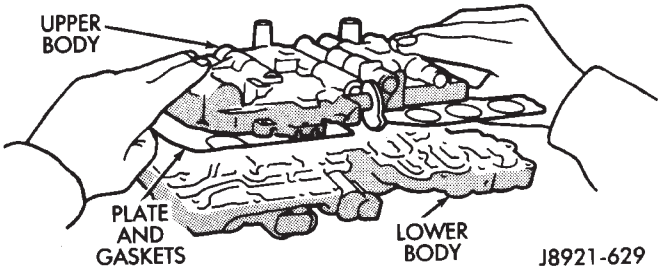

Fig. 6 Upper Body, Plate And Gaskets

LOWER BODY DISASSEMBLY

(1) Remove check valve and spring, pressure relief valve and spring and ball check and seat from lower body. Note location of each valve for assembly reference (Fig. 1).

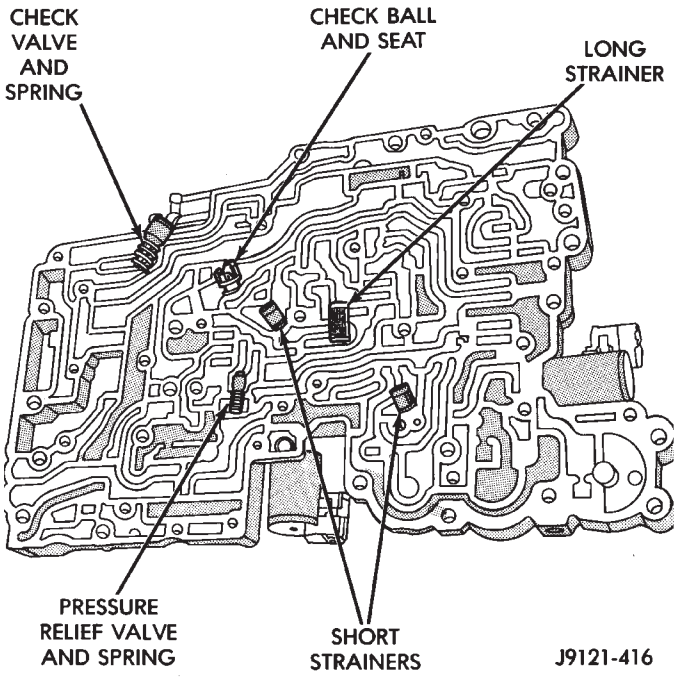

Fig. 1 Lower Body Check Valve And Strainer Location

(2) Remove oil strainers (Fig. 2).

(3) Note or mark position of valve retainers and pressure reducing plug clip for assembly reference (Fig. 2). Do not remove the retainers at this time.

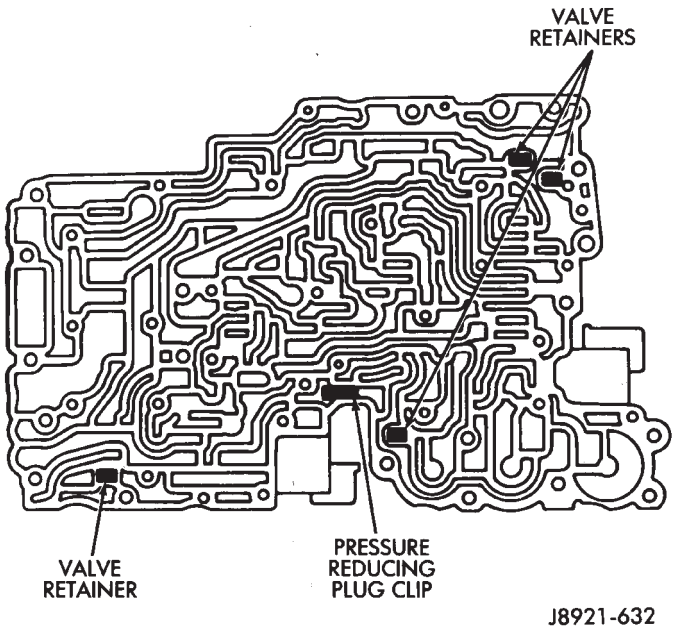

Fig. 2 Valve Retainer And Clip Location

(4) Remove solenoid No. 1, 2 and 3. Discard solenoid O-rings.

(5) Remove 1-2 shift valve retainer (Fig. 3).

(6) Remove 1-2 shift valve plug, valve spring and valve (Fig. 4).

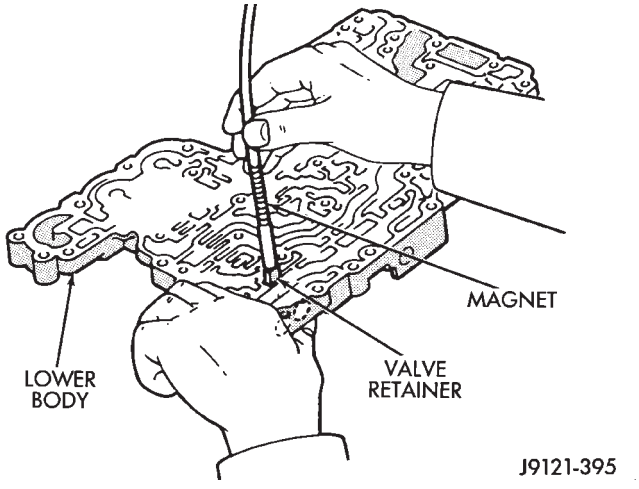

Fig. 3 Removing 1-2 Shift Valve Retainer

(7) Remove primary regulator valve as follows:

WARNING: THE PRIMARY REGULATOR VALVE SLEEVE AND PLUNGER ARE UNDER TENSION FROM THE VALVE SPRING. EXERT COUNTER-PRESSURE ON THE SPRING WHILE REMOVING THE VALVE RETAINER TO PREVENT COMPONENTS FROM FLYING OUT.

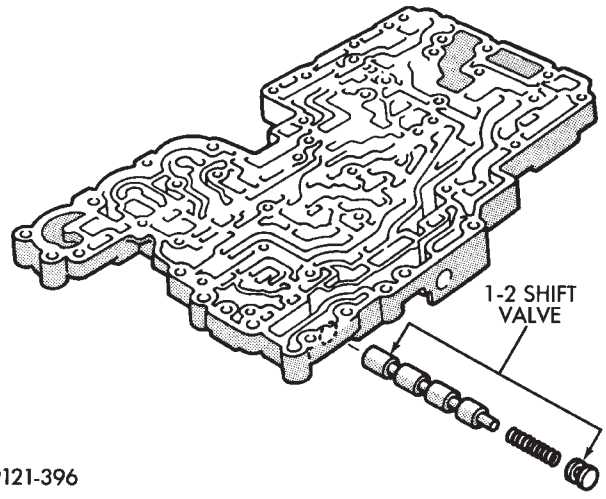

Fig. 4 Removing/Installing 1-2 Shift Valve

(a) Note position of valve retainer for assembly reference (Fig. 5). Then press valve sleeve inward with your thumb and remove retainer with magnet.

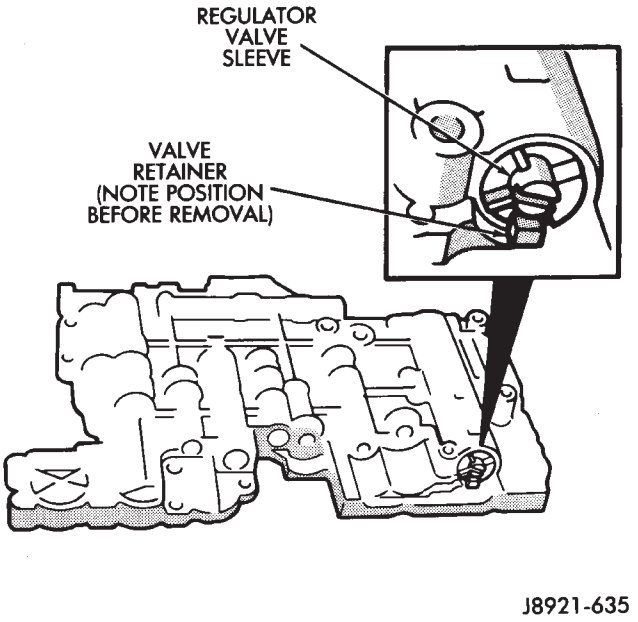

Fig. 5 Regulator Valve Retainer Position

(b) Slowly release thumb pressure on sleeve and remove sleeve, spring and washer and valve (Fig. 6). Use magnet to remove valve if necessary.

(8) Remove regulator valve plunger from sleeve (Fig. 7).

(9) Remove retaining clip and remove pressure reducing plug (Fig. 8). Cover screwdriver blade with tape to avoid scratching valve body surface.

(10) Remove accumulator control valve retainer and remove control valve assembly (Fig. 9).

(11) Remove spring and control valve from valve sleeve (Fig. 10).

(12) Clean lower body valve components with solvent and dry them with compressed air only. Do not

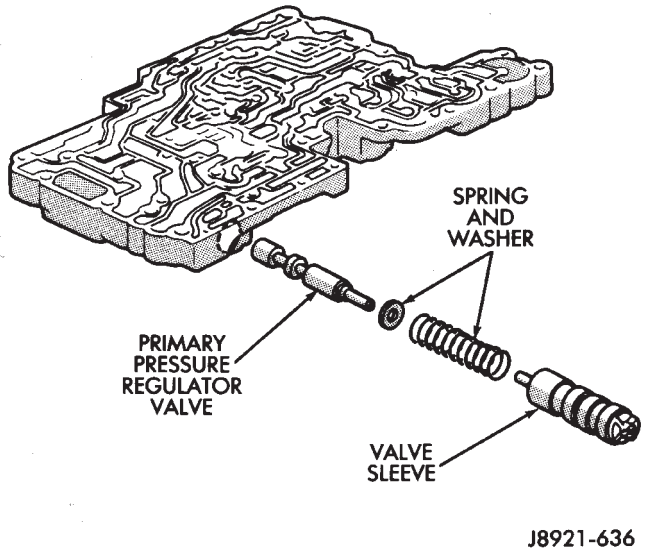

Fig. 6 Removing/Installing Primary Pressure Regulator Valve

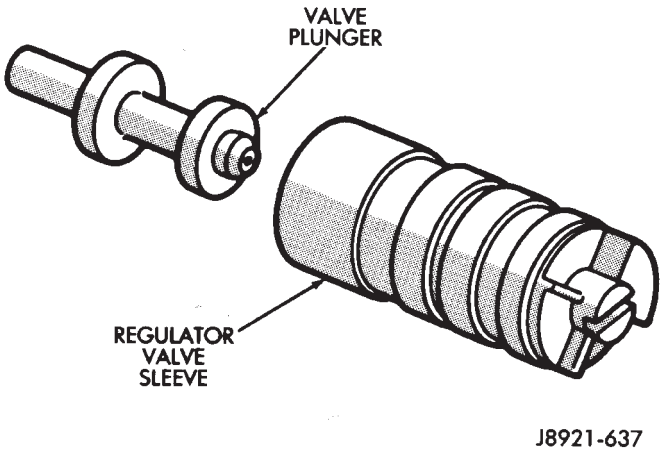

Fig. 7 Removing/Installing Regulator Valve Plunger

use shop towels or rags. Lint or foreign material from towels or rags can interfere with valve operation.

(13) Inspect condition of lower body components. Replace lower body if any bores are scored or corroded. Replace valves, plugs or sleeves that are scored or worn. Replace oil strainers if cut, torn or damaged in any way.

(14) Inspect valve body springs. Replace any spring having rusted, distorted, or collapsed coils. Measure length of each valve body spring. Replace any spring if free length is less than length specified in following chart (Fig. 11).

LOWER BODY ASSEMBLY

(1) Lubricate lower body components with automatic transmission fluid.

(2) Install spring and accumulator control valve in sleeve (Fig. 11). Then install assembled components in lower body (Fig. 9).

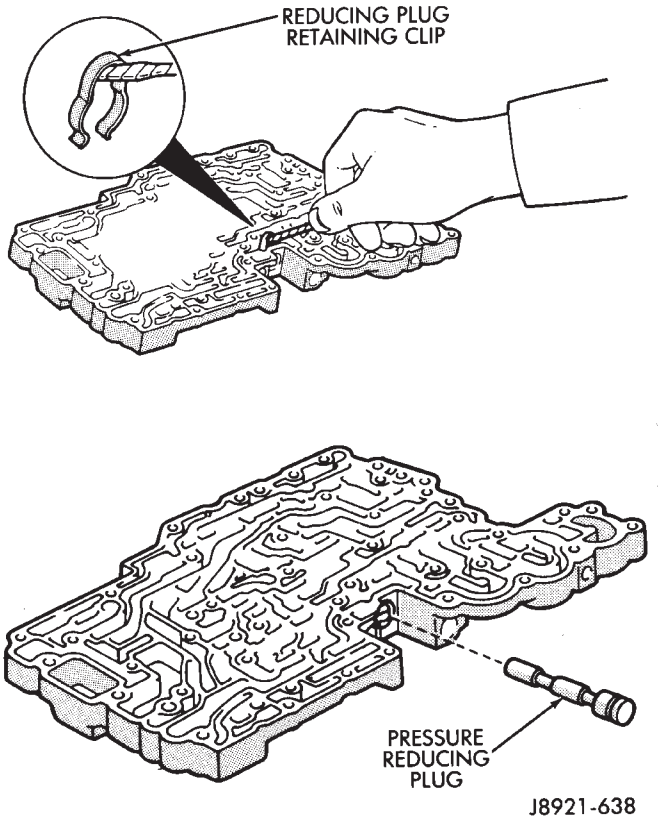

Fig. 8 Removing/Installing Pressure Reducing Plug

(3) Press accumulator control valve assembly into valve bore and install retainer (Fig. 9).

(4) Install pressure reducing plug in plug bore. Then secure plug with retaining clip (Fig. 8).

(5) Install washer on primary regulator valve plunger (Fig. 12).

(6) Install primary regulator valve plunger in valve sleeve (Fig. 7).

(7) Install valve spring and regulator valve sleeve and plunger.

(8) Press regulator valve sleeve into bore and install retainer (Fig. 5 and 6). Be sure retainer is positioned in sleeve lugs as shown.

(9) Install 1-2 shift valve, spring and plug (Fig. 4). Then press valve assembly into bore and install retainer.

(10) Install replacement O-rings on solenoids and install solenoids on valve body. Tighten solenoid attaching bolts to 10 N·m (7 ft-lbs) torque.

(11) Install oil strainers (Fig. 13). **Identify strainers before installation. The three strainers are all the same diameter but are different lengths. Two strainers are 11.0 mm (0.443 in.) long while one strainer is 19.5 mm (0.76 in.) long (Fig. 14).**

(12) Install check valve and spring (Fig. 13).

(13) Install check ball and seat (Fig. 13).

(14) Install pressure relief valve and spring (Fig. 13).

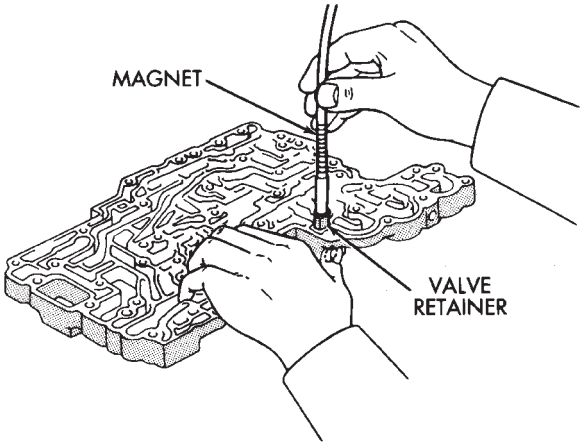

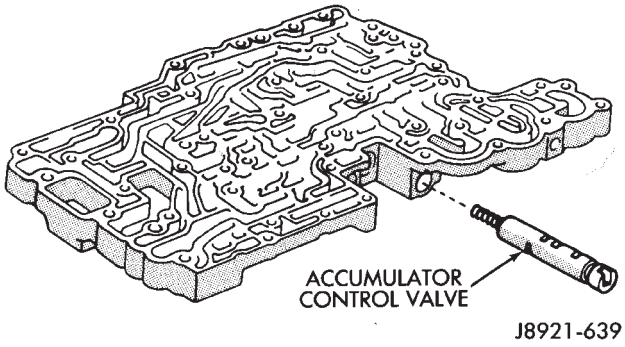

Fig. 9 Removing/Installing Accumulator Control Valve Assembly

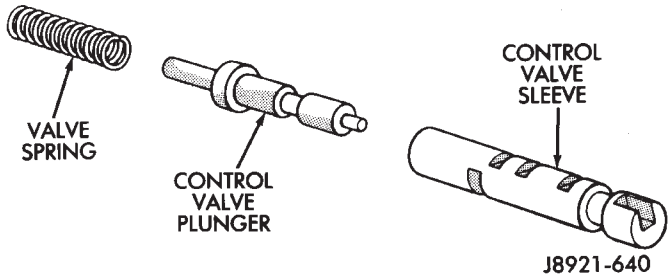

Fig. 10 Accumulator Control Valve Components

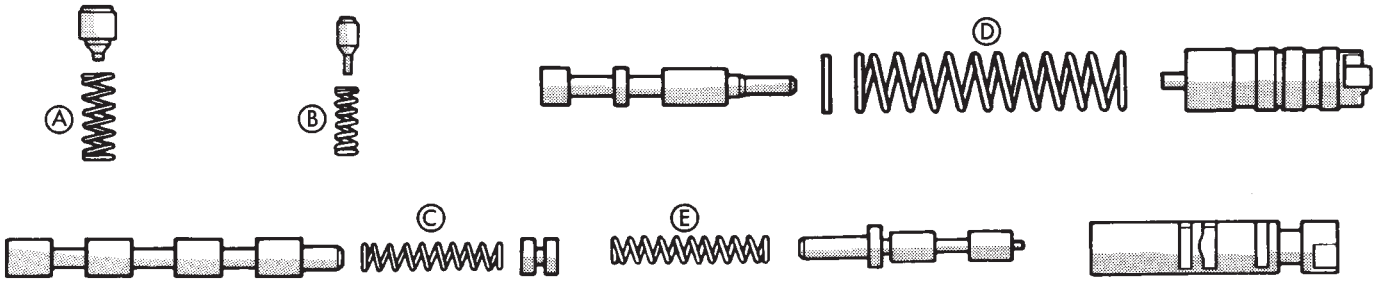

Spring	Free Length
(A) Check Valve	20.2 mm (0.801 in.)
(B) Pressure Relief Valve	11.2 mm (0.441 in.)
(C) 1-2 Shift Valve	30.8 mm (1.213 in.)
(D) Primary Regulator Valve	62.3 mm (2.453 in)
(E) Accumulator Control Valve	29.8 mm (1.173 in)

J9121-383

Fig. 11 Lower Body Valve Spring Dimensions

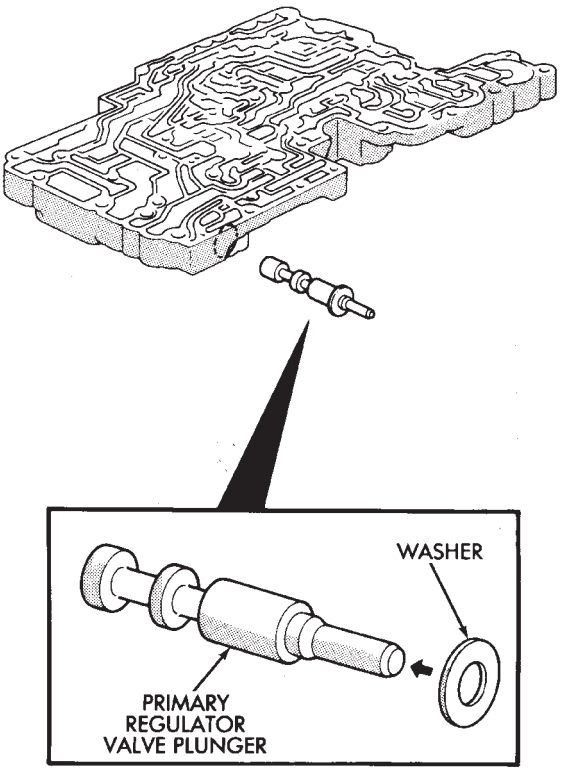

Fig. 12 Installing Washer On Regulator Valve Plunger

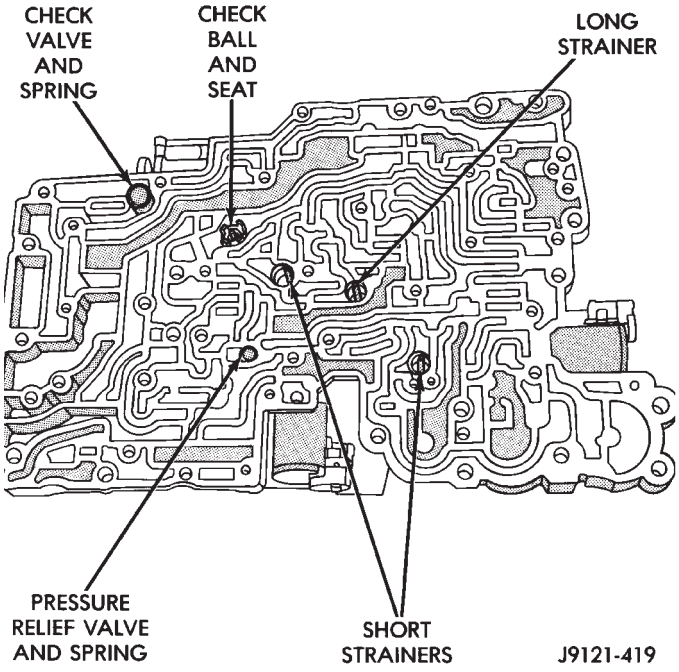

Fig. 13 Oil Strainer And Check Valve Installation

UPPER BODY DISASSEMBLY AND INSPECTION

(1) Remove valve body plate and gaskets (Fig. 1). Discard gaskets.

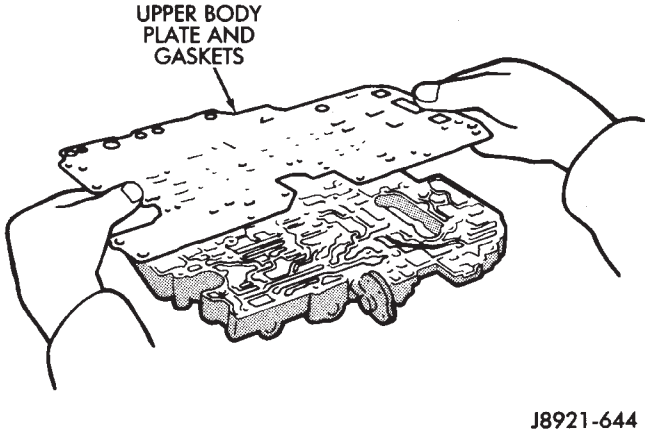

Fig. 1 Removing/Installing Upper Body Plate And Gaskets

(2) Remove strainer and eight check balls (Fig. 2). Note check ball and strainer position for assembly reference.

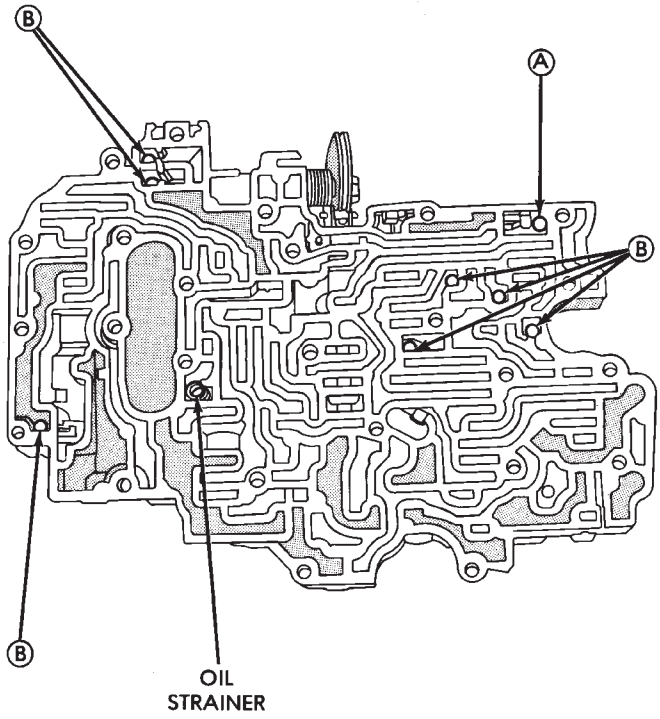

CHECK BALL	DIAMETER
Ⓐ	6.35 mm (.250 in.)
Ⓑ	5.535 mm (.218 in.)

J9121-415

Fig. 2 Check Ball And Strainer Location/ Identification

(3) Remove valve stop and throttle cam (Fig. 3).

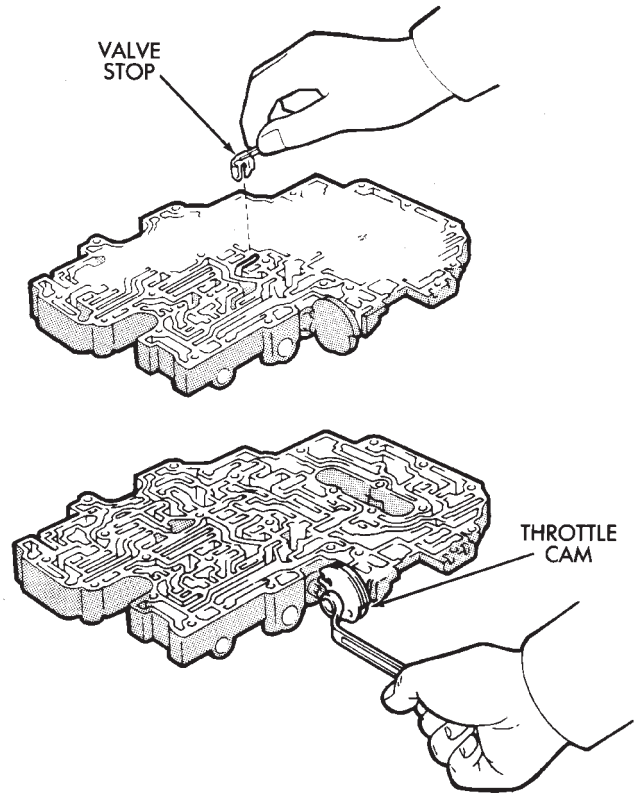

Fig. 3 Removing/Installing Valve Stop And Throttle Cam

(4) Remove throttle valve pin with magnet and remove downshift plug, valve spring and throttle valve (Fig. 4).

(5) Turn upper body over and remove throttle valve adjusting rings and spring (Fig. 5). Note number of adjusting rings if valve is equipped with them.

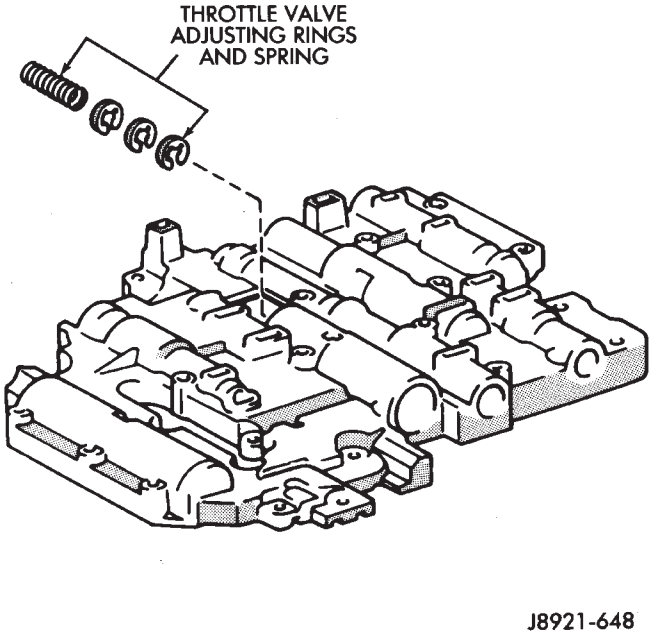

Fig. 5 Throttle Valve Adjusting Ring Location (If Equipped)

(6) Remove 3-4 shift valve retainer with magnet and remove valve plug, spring and 3-4 shift valve (Fig. 6).

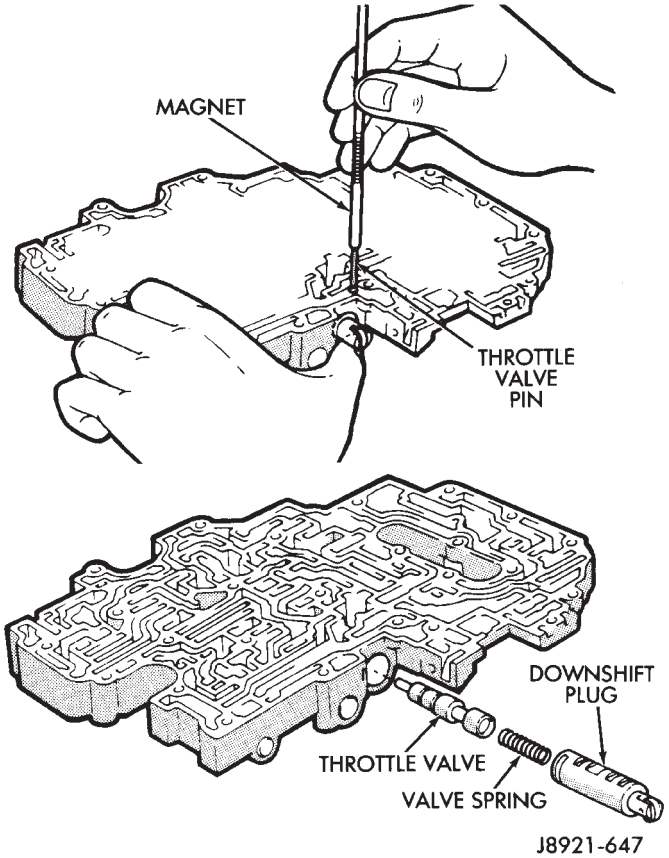

Fig. 4 Removing/Installing Throttle Valve

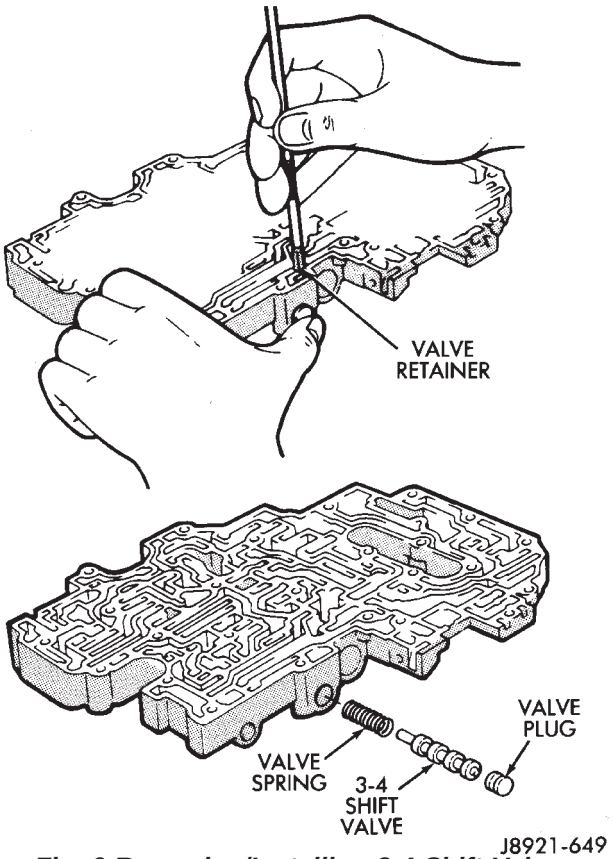

Fig. 6 Removing/Installing 3-4 Shift Valve

(7) Remove second coast modulator valve retainer and remove valve plug, spring and valve.

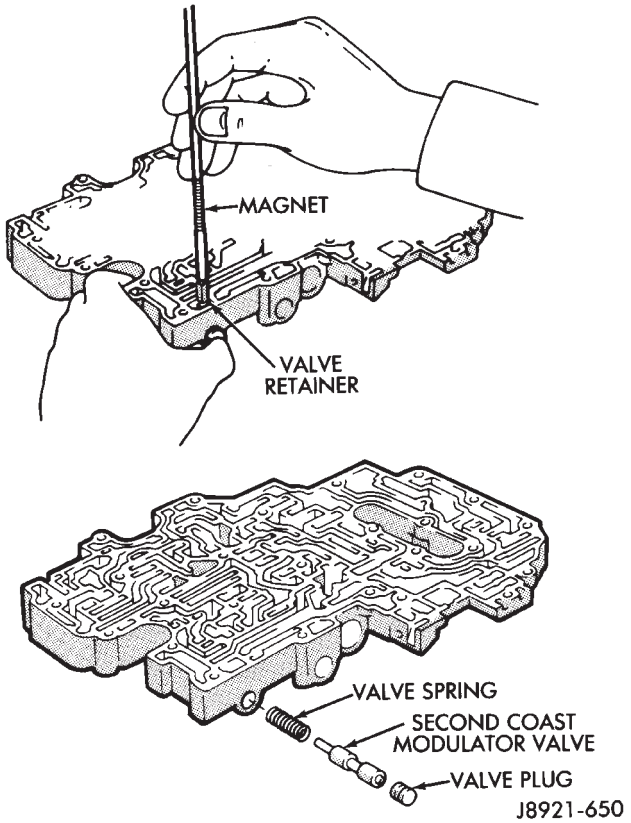

Fig. 7 Removing/Installing Second Coast Modulator Valve

(8) Remove lock-up relay valve retainer and remove relay valve and sleeve assembly (Fig. 8).

(9) Remove relay valve, spring and plunger from valve sleeve (Fig. 9).

(10) Remove secondary pressure regulator valve retainer and remove plug, regulator valve and spring (Fig. 10).

(11) Remove cut-back valve retainer and remove plug, cut-back valve and spring (Fig. 11).

(12) Remove 2-3 shift valve retainer and remove plug, spring and 2-3 shift valve (Fig. 12).

(13) Remove low coast modulator valve retainer and remove valve plug, spring and low coast modulator valve (Fig. 13).

(14) Clean the upper body components with solvent and dry them with compressed air only. Do not use shop towels or rags. Lint or foreign material from towels or rags can interfere with valve operation.

(15) Inspect condition of the upper body components. Replace the upper body if any of the bores are scored or corroded. Replace any valves, plugs or sleeves if scored or worn. Replace the oil strainer if cut, torn or damaged in any way.

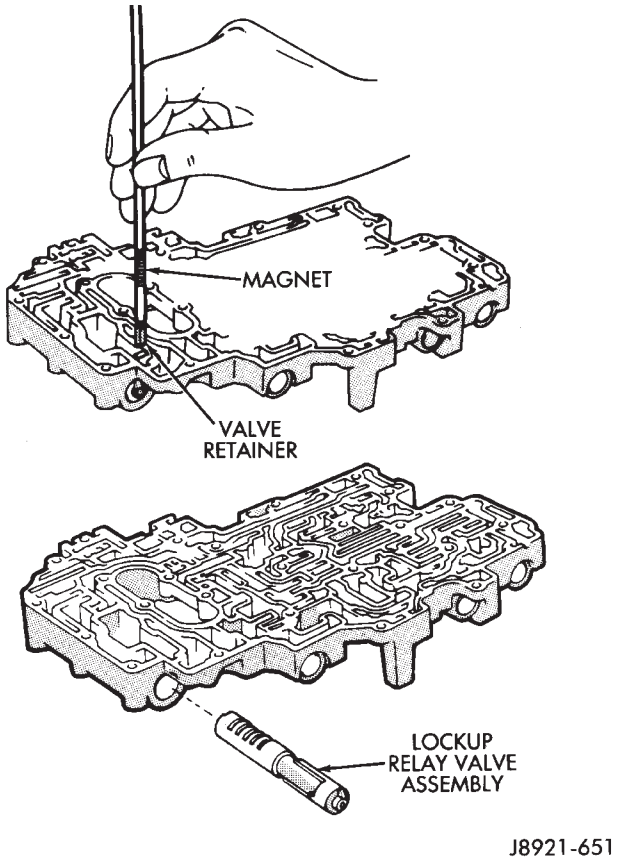

Fig. 8 Removing/Installing Converter Clutch Relay Valve

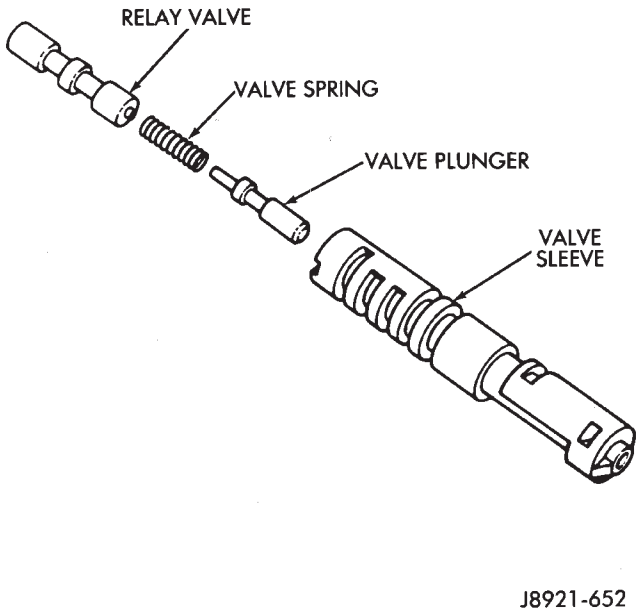

Fig. 9 Relay Valve Components

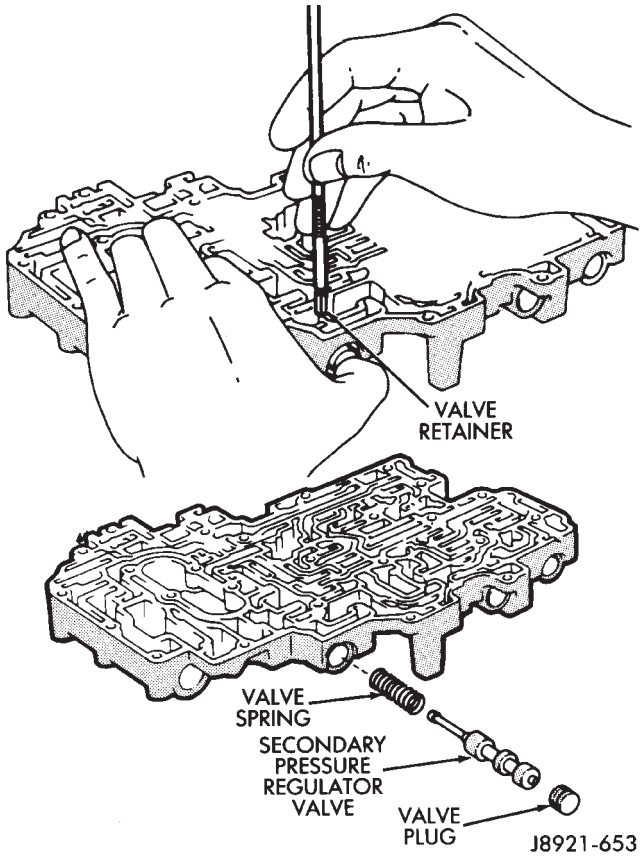

Fig. 10 Removing/Installing Secondary Pressure Regulator Valve

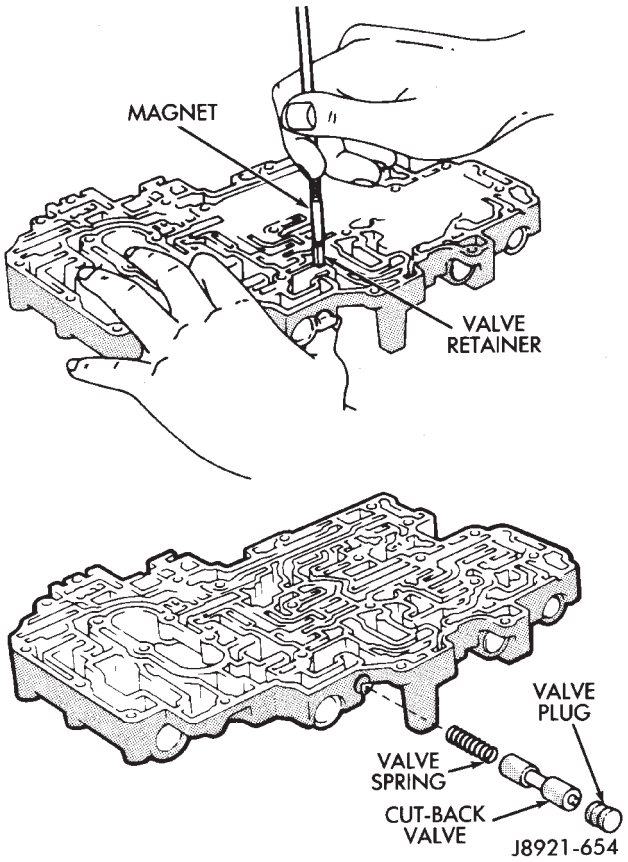

Fig. 11 Removing/Installing Cut-Back Valve

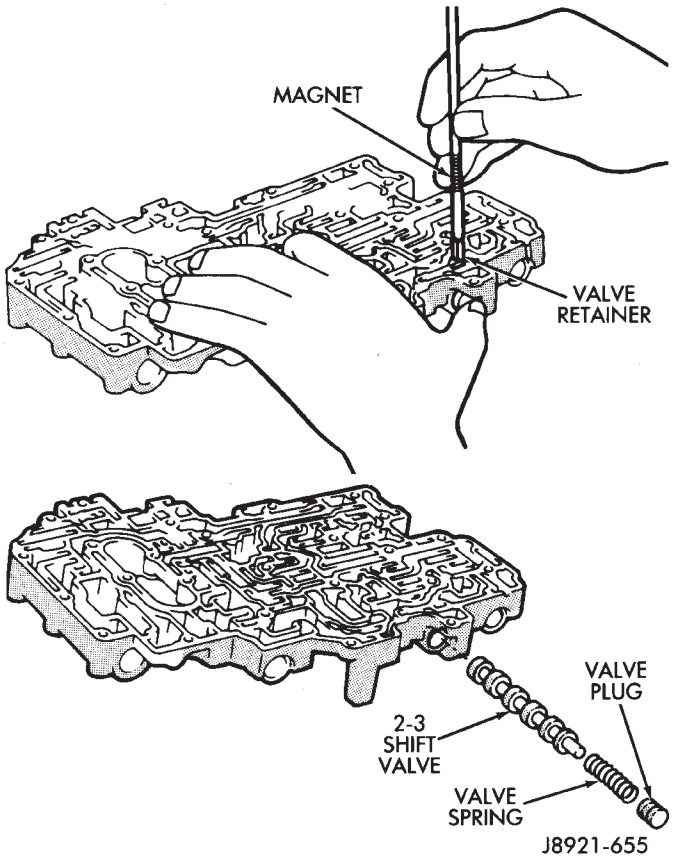

Fig. 12 Removing/Installing 2-3 Shift Valve

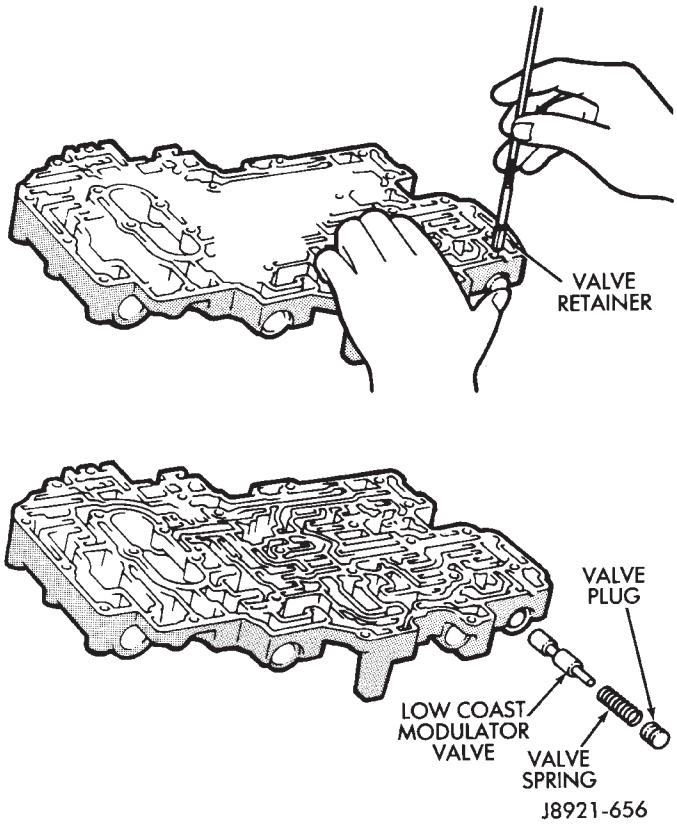

Fig. 13 Removing/Installing Low Coast Modulator Valve

(16) Inspect the valve body springs. Replace any spring having rusted, distorted, or collapsed coils-.Measure length of each spring. Replace any spring if free length is less than specified in the chart (Fig. 14).

UPPER BODY ASSEMBLY

(1) Lubricate the valves, springs, plugs, sleeves and the valve bores in the upper body with automatic transmission fluid.

(2) Note position of the valve retainers (A) and stop (B) for assembly reference (Fig. 15).

(3) Install low coast modulator valve, spring and plug in valve bore. Press valve plug inward and install retainer (Fig. 13).

(4) Install 2-3 shift valve, spring and plug in valve bore. Press plug inward and install retainer (Fig. 12).

(5) Install cut-back valve spring, valve and plug (Fig. 11). Press plug inward and install retainer.

(6) Install secondary regulator valve spring, valve and plug in valve bore. Press plug inward and install retainer (Fig. 10).

(7) Assemble lock-up relay valve. Install spring and plunger in valve sleeve (Fig. 9). Then install assembled valve in sleeve.

(8) Install assembled lock-up relay valve in valve bore and install retainer (Fig. 8).

(9) Install second coast modulator valve, spring and plug in valve bore. Press plug inward and install retainer (Fig. 7).

(10) Install 3-4 shift valve, spring and plug in bore. Press plug inward and install retainer (Fig. 6).

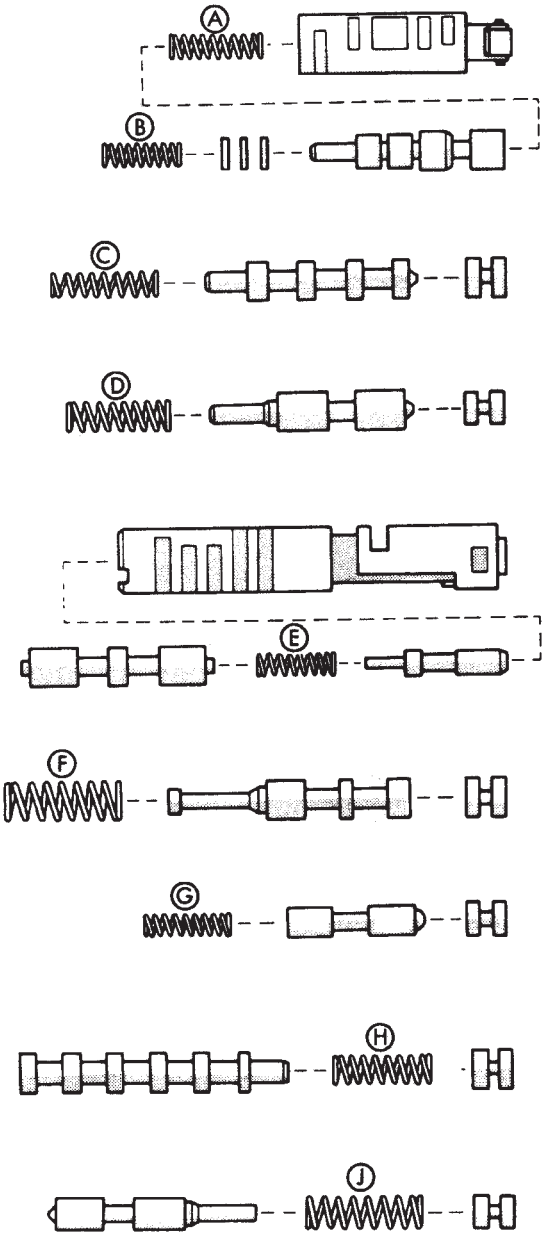

Spring	Free Length
(A) Downshift Plug	27.3 mm (1.074 in.)
(B) Throttle Valve	20.6 mm (0.811 in.)
(C) 3-4 Shift Valve	30.8 mm (1.212 in.)
(D) Second Coast Modulator Valve	25.3 mm (0.996 in.)
(E) Lockup Relay Valve	21.4 mm (0.843 in.)
(F) Second Regulator Valve	30.9 mm (1.217 in.)
(G) Cut-Back Valve	21.8 mm (0.858 in.)
(H) 2-3 Shift Valve	30.8 mm (1.212 in.)
(J) Low Coast Modulator Valve	27.8 mm (1.094 in.)

Fig. 14 Upper Body Spring/Valve Identification

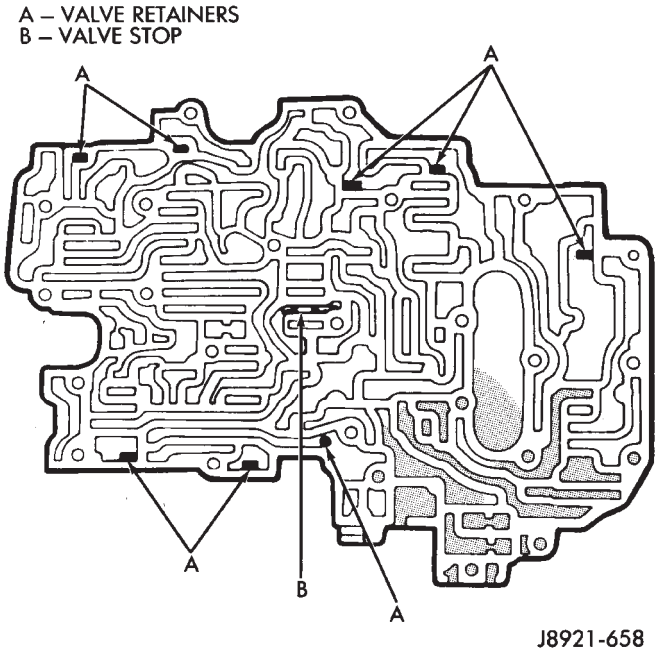

Fig. 15 Valve Retainer And Stop Locations

(11) Install throttle valve in valve bore. Push valve into place and install valve stop (Fig. 16).

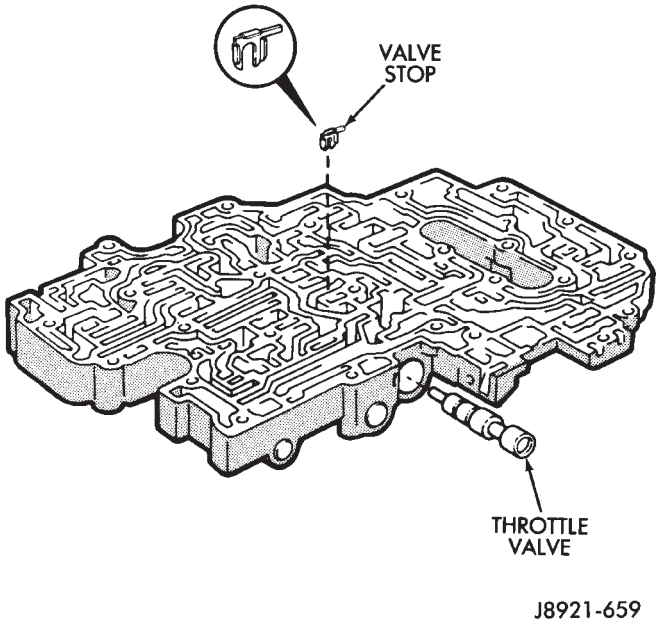

Fig. 16 Installing Throttle Valve And Stop

(12) On models with adjusting rings, turn upper body over and install adjusting rings (Fig. 17). Be sure to install same number of rings as were removed.

(13) Install throttle valve adjusting spring in bore and onto end of throttle valve (Fig. 18).

(14) Install downshift spring and plug in throttle valve bore. Press plug inward against throttle valve and spring and install retainer pin (Fig. 19).

(15) Install sleeve in throttle cam (Fig. 20).

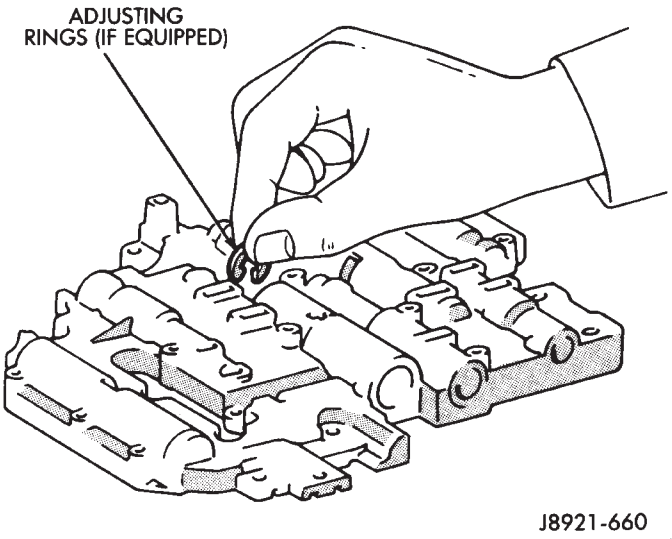

Fig. 17 Install Throttle Valve Adjusting Rings (If Equipped)

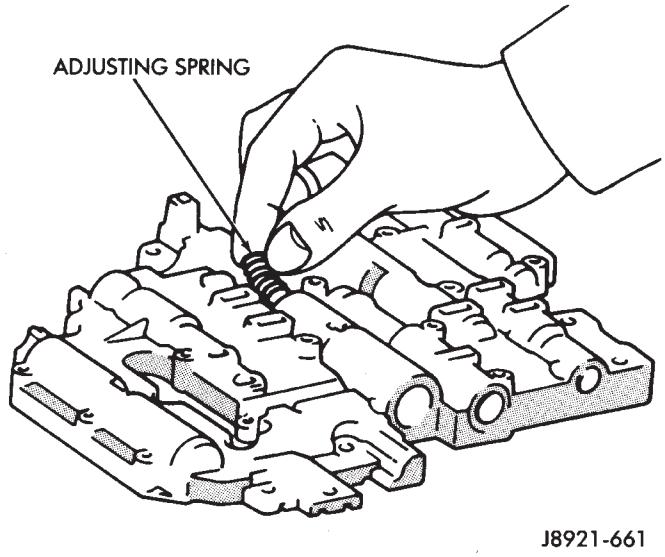

Fig. 18 Installing Throttle Valve Adjusting Spring

(16) Install spring on cam (Fig. 20). Hook curved end of spring through hole in cam as shown.

(17) Mount cam on upper body and install cam attaching bolt and spacer (Fig. 20). Tighten bolt to 10 N·m (7 ft. lbs.) torque.

(18) Be sure straight end of spring is seated in upper body slot as shown (Fig. 20).

(19) Install check balls in upper body (Fig. 2).

(20) Install oil strainer (Fig. 2).

INSTALLING UPPER BODY ON LOWER BODY

If valve body was equipped with gaskets, start at step (1). However, if valve body is not equipped with gaskets, start at step (4).

(1) Position new No. 1 gasket (Fig. 1) on upper body.

(2) Position valve body plate on No. 1 gasket.

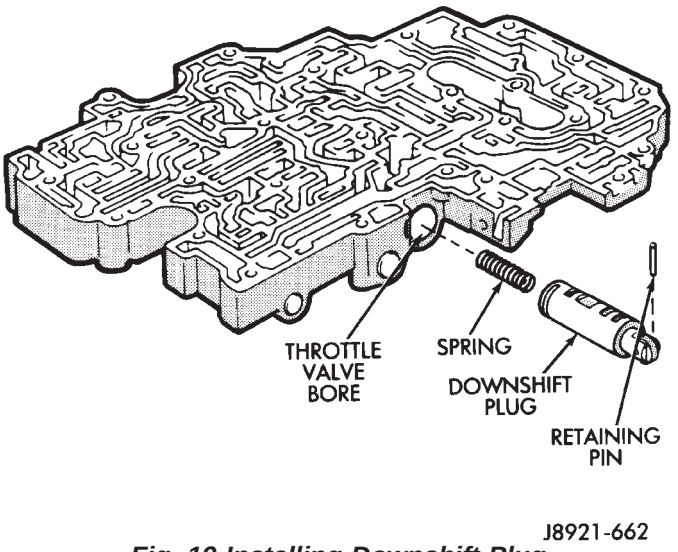

Fig. 19 Installing Downshift Plug

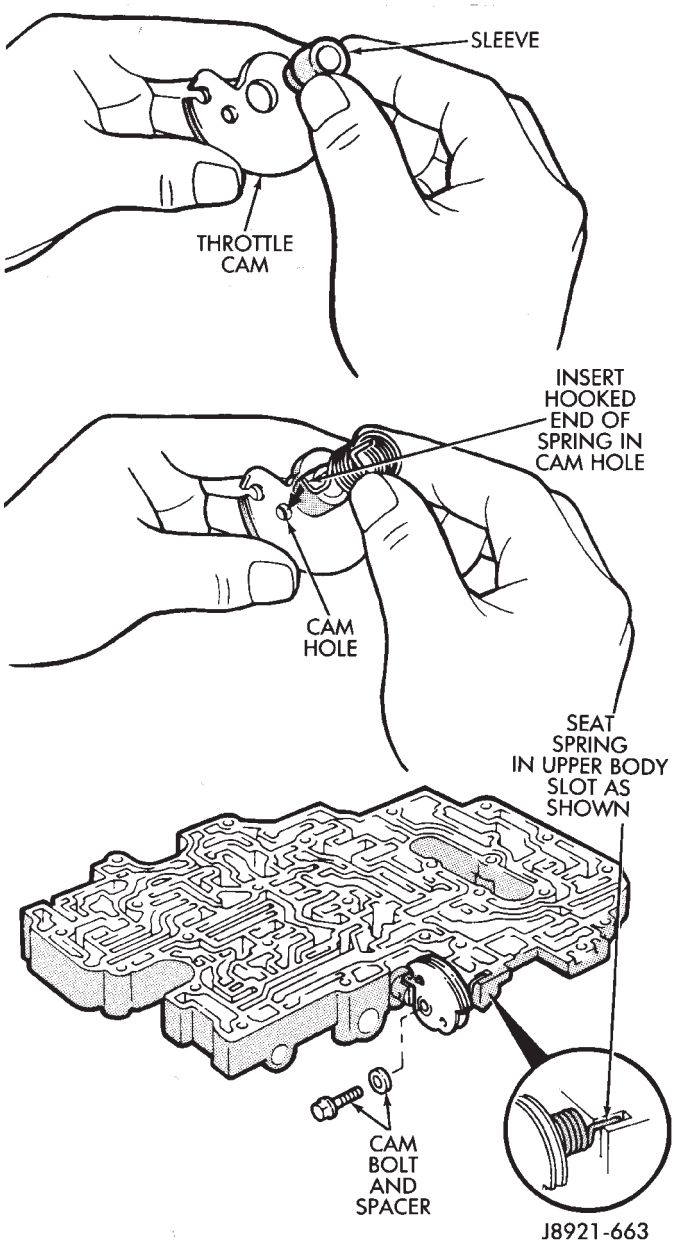

Fig. 20 Installing Throttle Cam

(3) Position new No. 2 gasket (Fig. 2) on valve body plate and align gaskets and plate using bolt holes as guides.

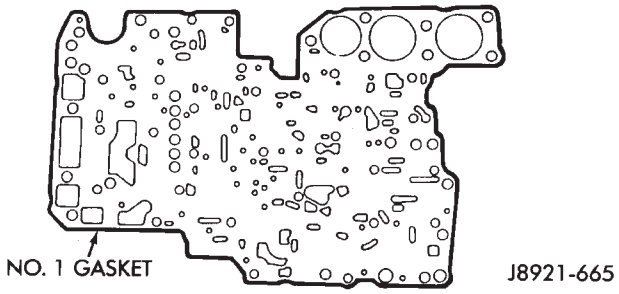

Fig. 1 Valve Body Gasket No. 1

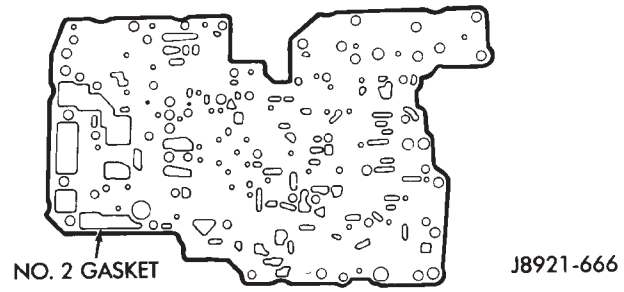

Fig. 2 Valve Body Gasket No. 2

(4) Install valve body bolts. **Three different length bolts are used. Refer to the Figure 3 for bolt locations. Chart symbols indicate bolt location and length in millimeters.**

(5) Tighten valve body bolts to 6.4 N·m (56 in. lbs.) torque.

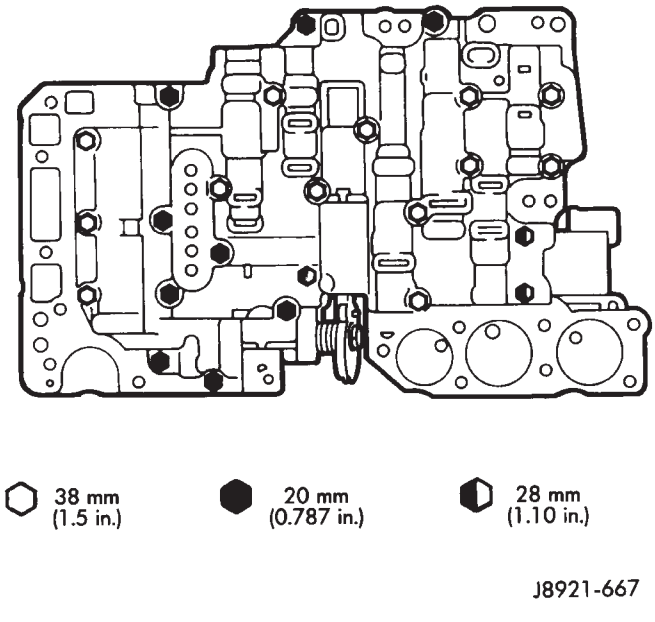

Fig. 3 Valve Body Bolt Location/Size

(6) Install manual valve (Fig. 4).

(7) Install two-piece detent spring (Fig. 5). Tighten spring attaching bolt to 10 N·m (7 ft. lbs.) torque.

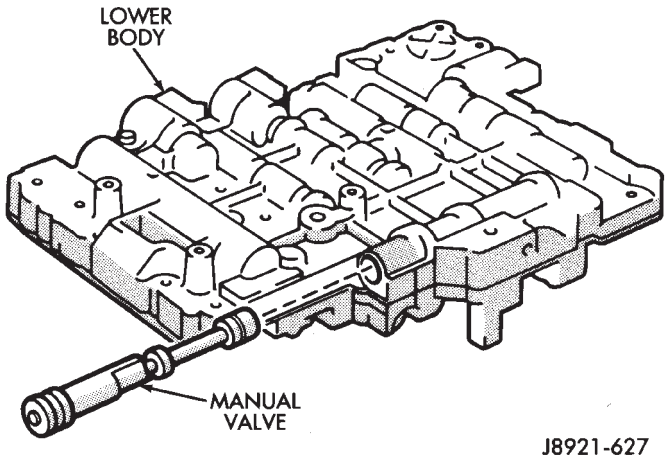

Fig. 4 Installing Manual Valve

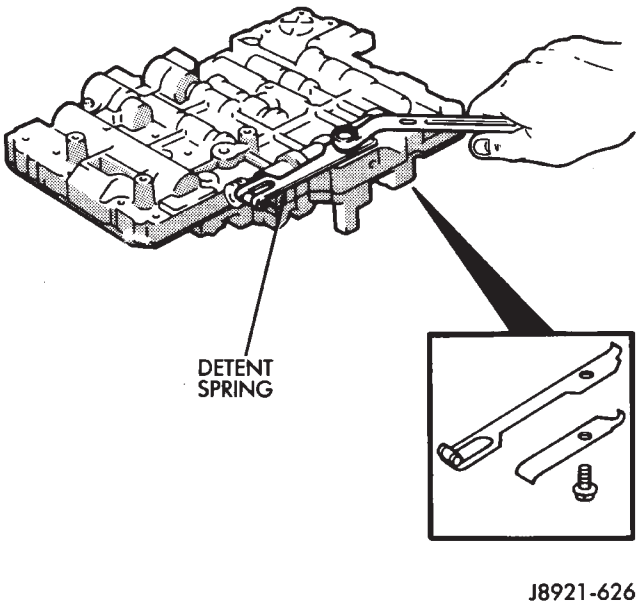

Fig. 5 Installing Detent Spring

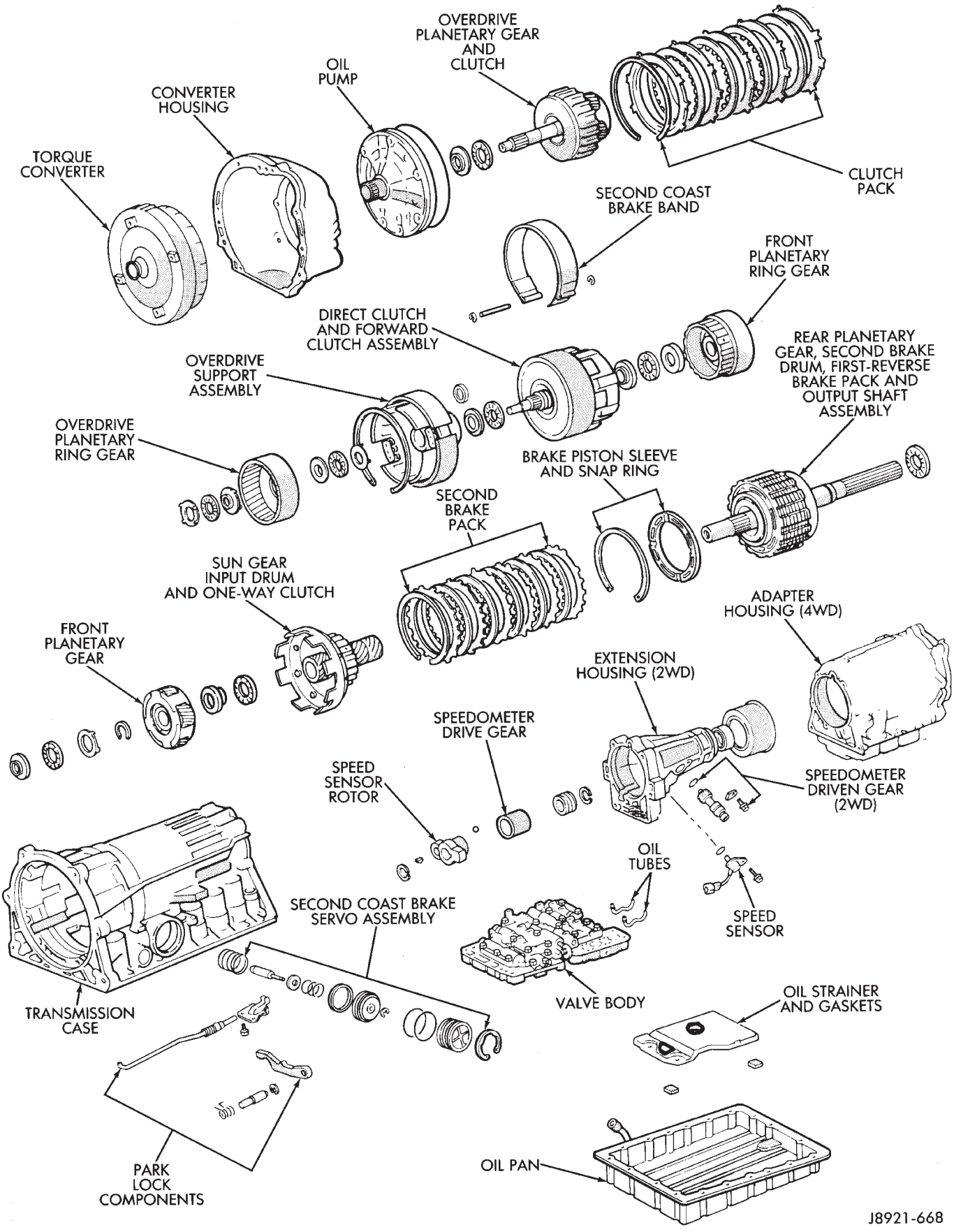

Fig. 1 AW-4 Transmission Components

TRANSMISSION ASSEMBLY AND ADJUSTMENT

(1) During assembly, lubricate components with transmission fluid or petroleum jelly as indicated.

(2) If any of the transmission components are still assembled after overhaul checking procedures, disassemble as necessary in preparation for transmission assembly.

(3) Verify thrust bearing and race installation during assembly. Refer to the Thrust Bearing Chart (Fig. 2) for bearing and race location and correct positioning.

(4) Install rear planetary gear, second brake drum and output shaft as outlined in following steps:

(5) Verify No. 10 thrust bearing and race (Fig. 2). Bearing and race outer diameter is 57.7 mm (2.272 in.) and inside diameter is 39.2 mm (1.543 in.).

(6) Coat thrust bearing and race assembly with petroleum jelly and install in case (Fig. 3). Race faces down. Bearing rollers face up.

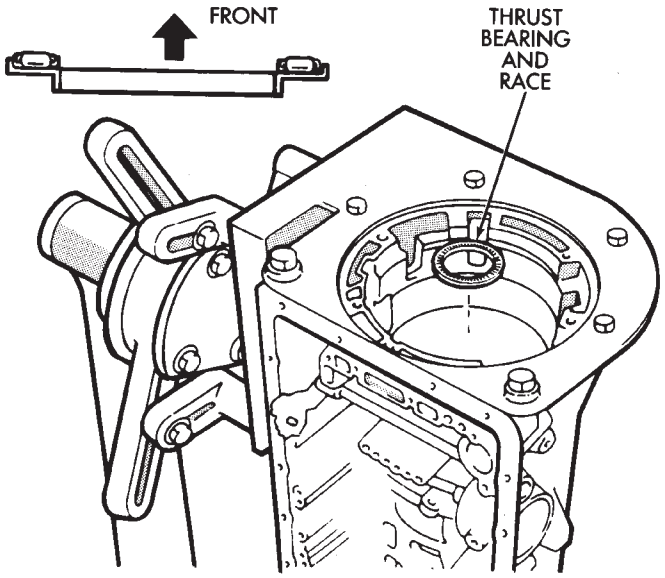

Fig. 3 Installing Thrust Bearing And Race (No. 10)

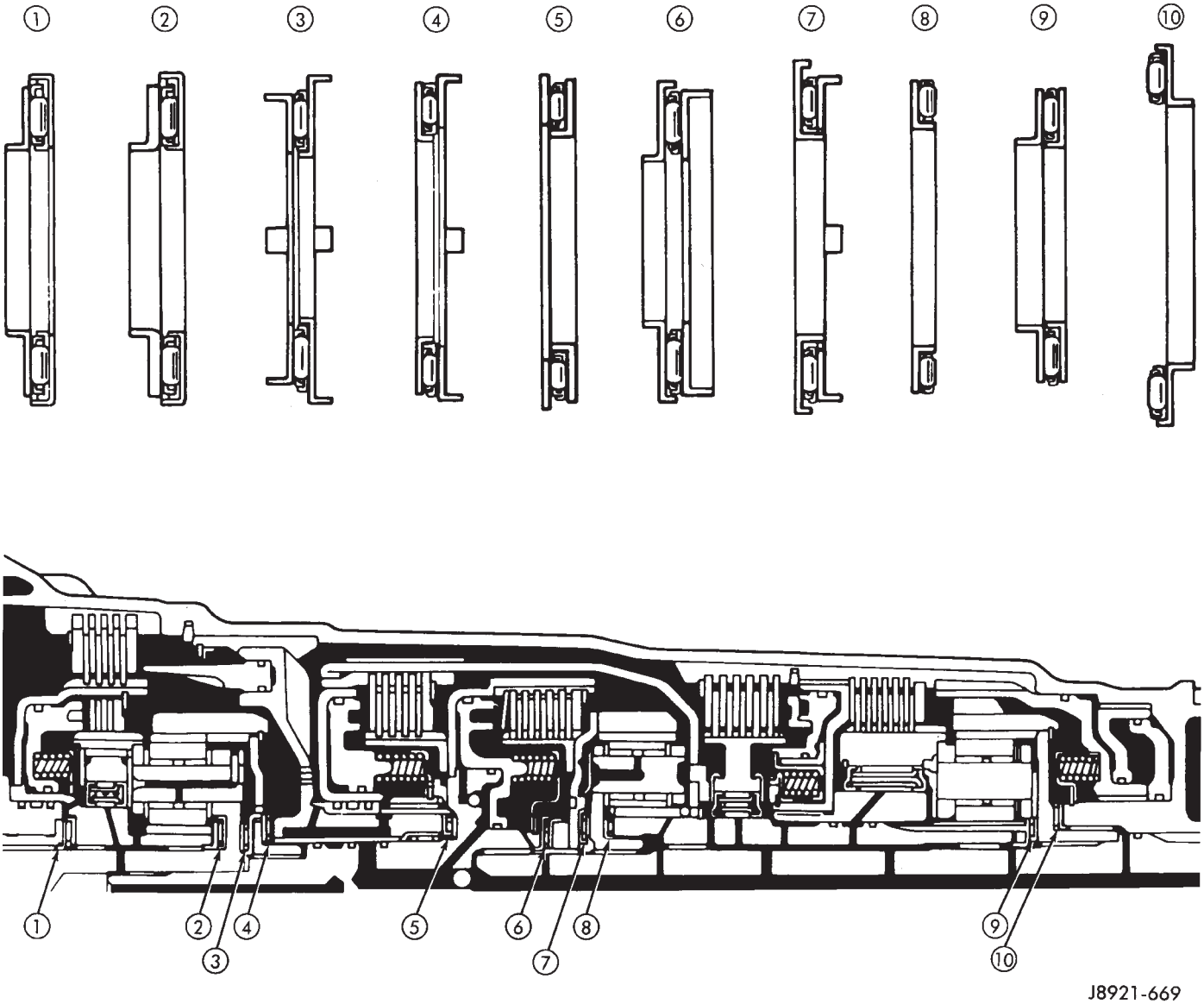

Fig. 2 Thrust Bearing Chart

(7) Align teeth of second brake drum and clutch pack (Fig. 4).

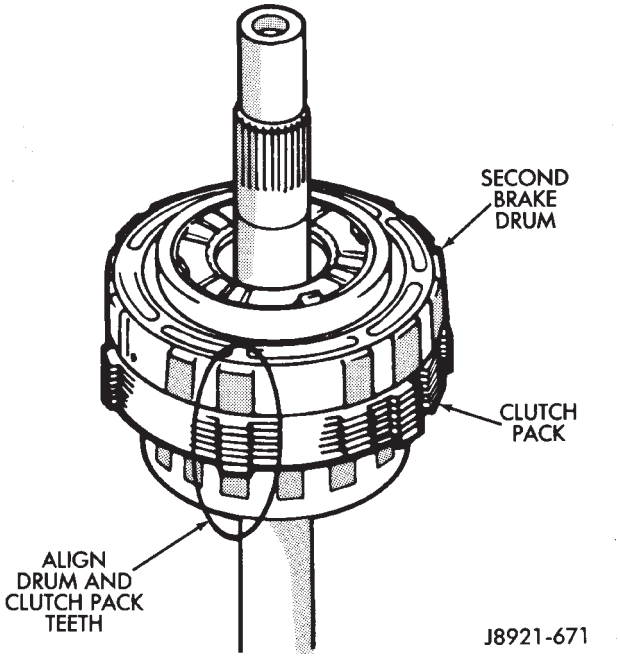

Fig. 4 Aligning Second Brake Drum And Clutch Pack Teeth

(8) Align rear planetary-output shaft assembly teeth with case slots and install assembly in case (Fig. 5).

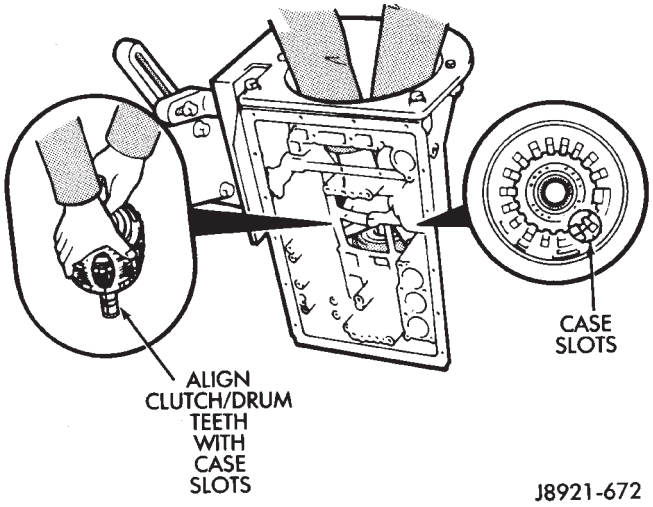

Fig. 5 Installing Output Shaft And Rear Planetary Assembly

(9) Install rear planetary snap ring with snap ring pliers. Chamfered side of snap ring faces up and toward case front (Fig. 6).

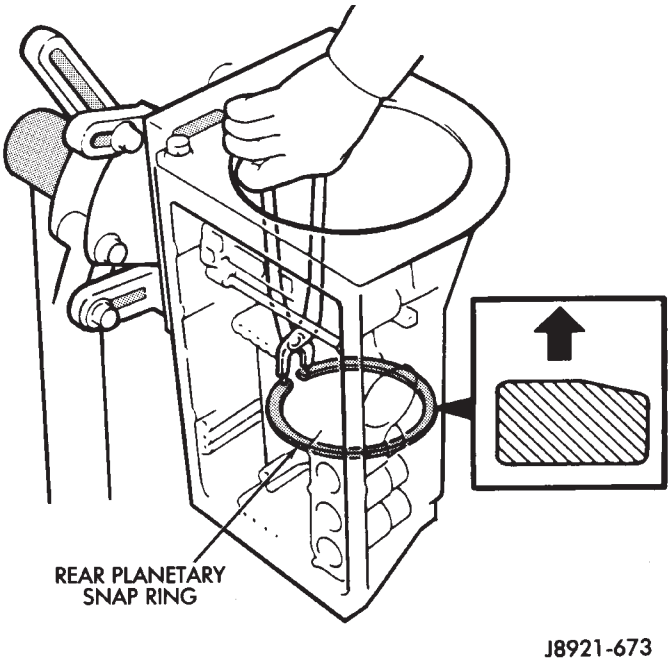

Fig. 6 Installing Planetary Snap Ring

(10) Check first-reverse brake pack clearance with feeler gauge. Clearance should be 0.70 - 1.20 mm (0.028 - 0.047 in.). If clearance is incorrect, planetary assembly, thrust bearing or snap ring is not properly seated in case. Remove and reinstall components if necessary.

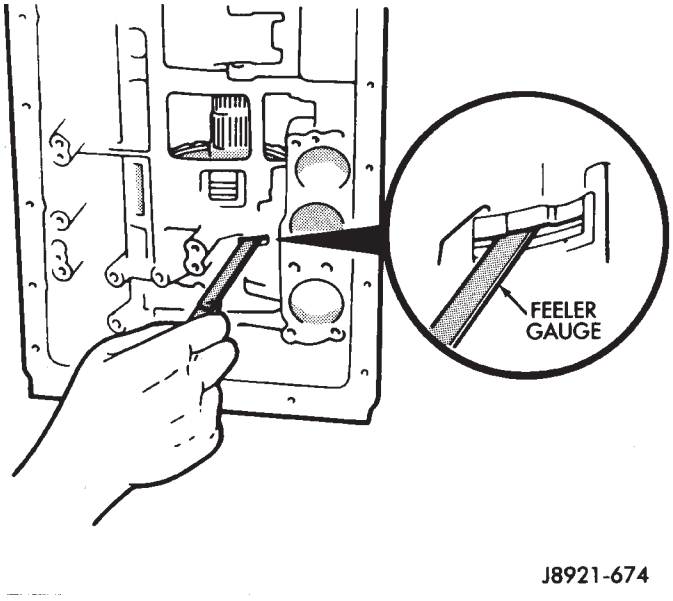

Fig. 7 Checking First-Reverse Brake Pack Clearance

(11) Install second brake piston sleeve (Fig. 8). Sleeve lip faces up and toward case front as shown.

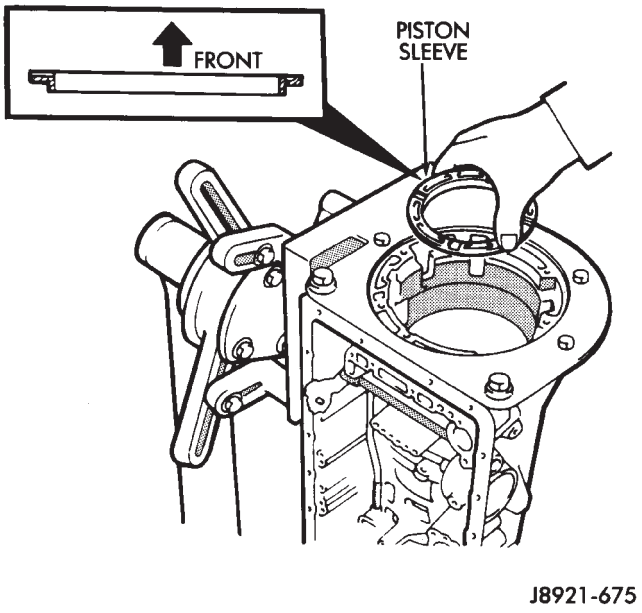

Fig. 8 Installing Second Brake piston Sleeve

(12) Install second brake drum gasket with Installer Tool 7544 (Fig. 9). Gasket depth is 43.7 mm (1.720 in.).

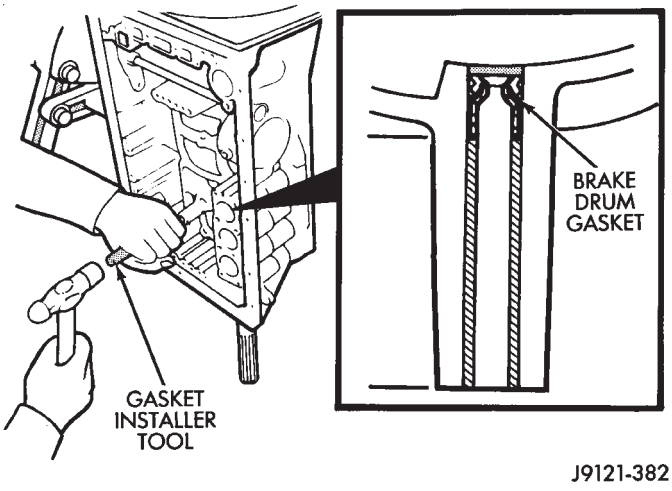

Fig. 9 Installing Second Brake Drum Gasket

(13) Install park lock pawl, spring and pin (Fig. 10).

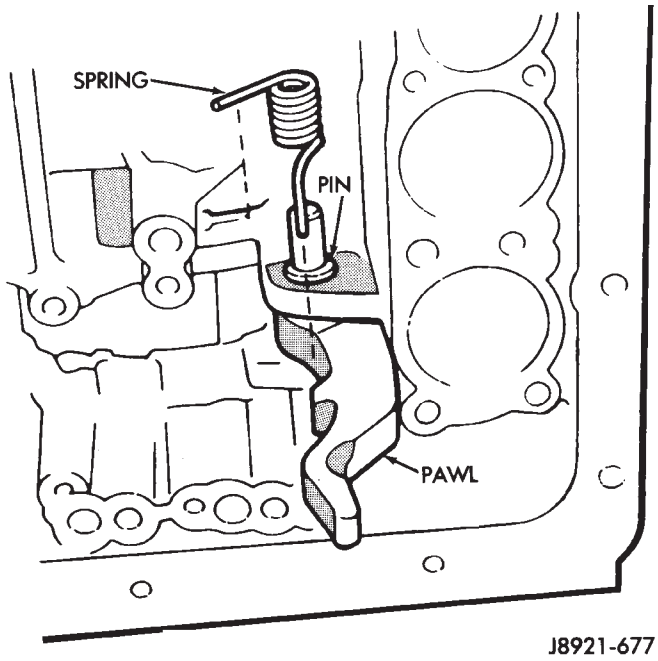

Fig. 10 Installing Park Lock Pin, Spring And Pawl

(14) Connect park lock rod to manual valve shift sector (Fig. 11).

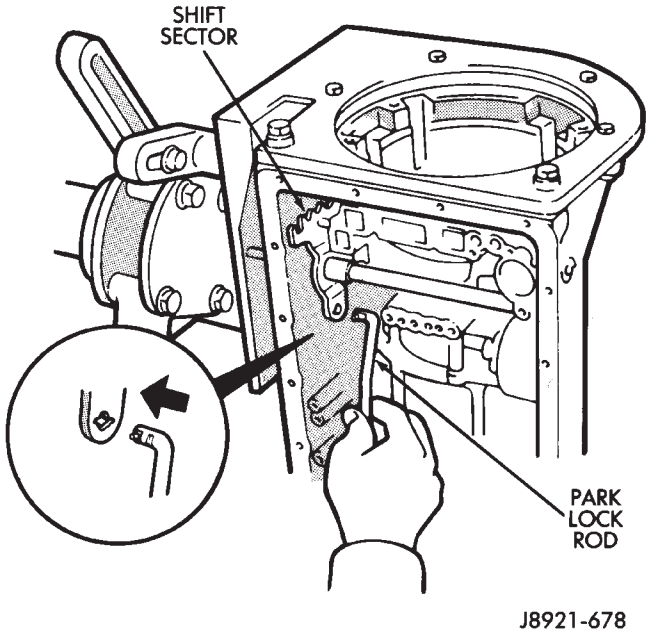

Fig. 11 Installing Park Lock Rod

(15) Position park lock rod bracket on case and tighten bracket attaching bolts to 10 N·m (7 ft. lbs.) torque (Fig. 12).

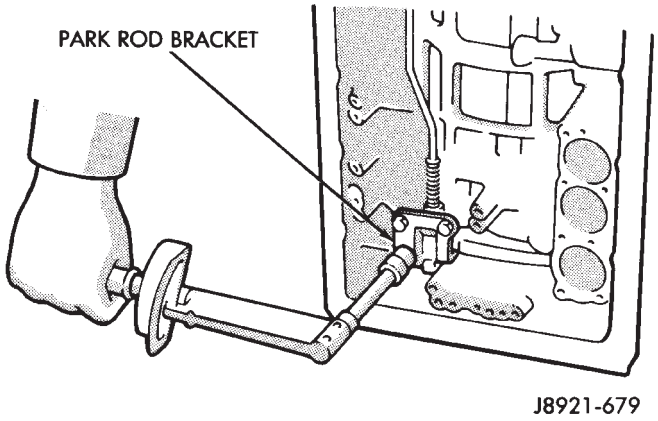

Fig. 12 Installing Park Rod Bracket

(16) Verify park lock operation. Move shift sector to Park position. Park pawl should be firmly engaged (locked) in planetary ring gear (Fig. 13).

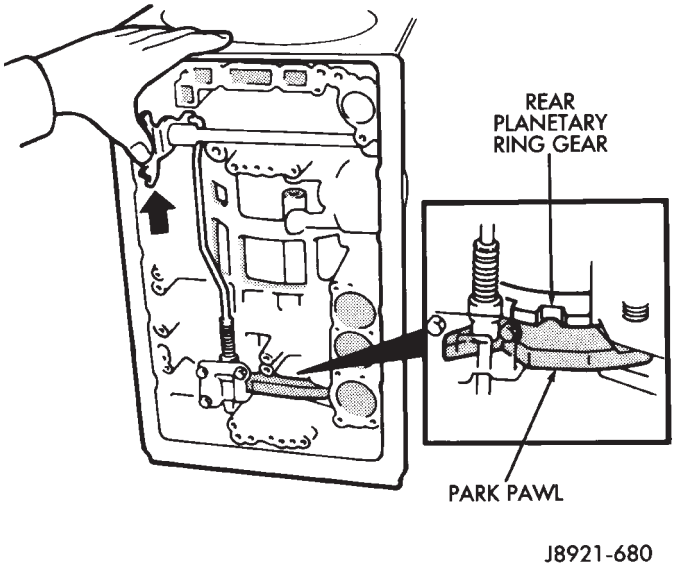

Fig. 13 Checking Park Pawl Engagement

(17) Install No. 1 one-way clutch (Fig. 14). Short flanged side of clutch faces up and toward case front.

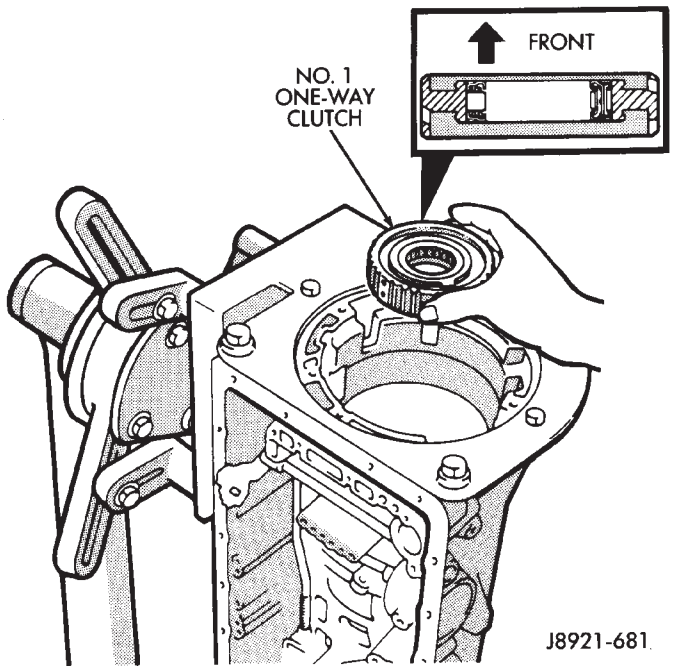

Fig. 14 Installing No. 1 One-Way Clutch

(18) Install second brake pack (Fig. 15). Install disc then plate. Continue installation sequence until correct number of discs-plates are installed. Use five discs and five plates.

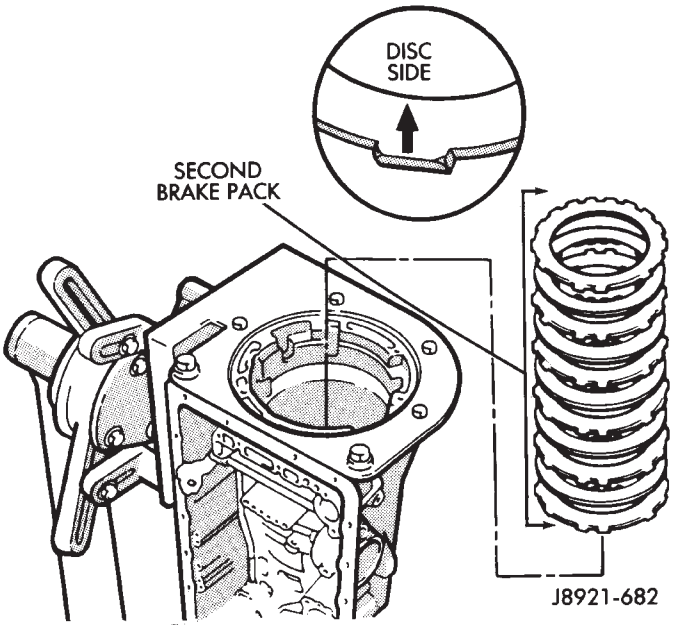

Fig. 15 Installing Second Brake Pack

(19) Install second brake pack retainer with rounded edge of retainer facing disc.

(20) Install second brake pack snap ring.

(21) Check brake pack clearance with feeler gauge (Fig. 16). Clearance should be 0.062 - 1.98 mm (0.024 - 0.078 in.). If brake pack clearance is not correct, brake pack components are not seated. Reassemble brake pack if necessary.

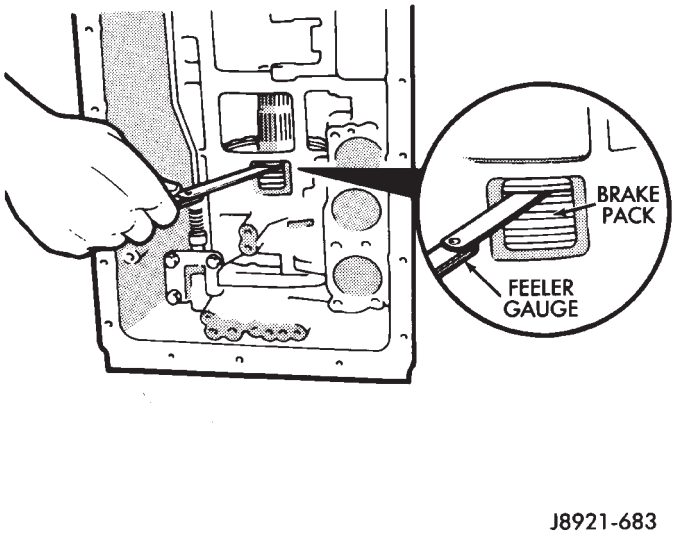

Fig. 16 Checking Second Brake Pack Clearance

(22) Install planetary sun gear and input drum (Fig. 17). Be sure drum thrust washer tabs are seated in drum. Use petroleum jelly to hold thrust washer in position if necessary.

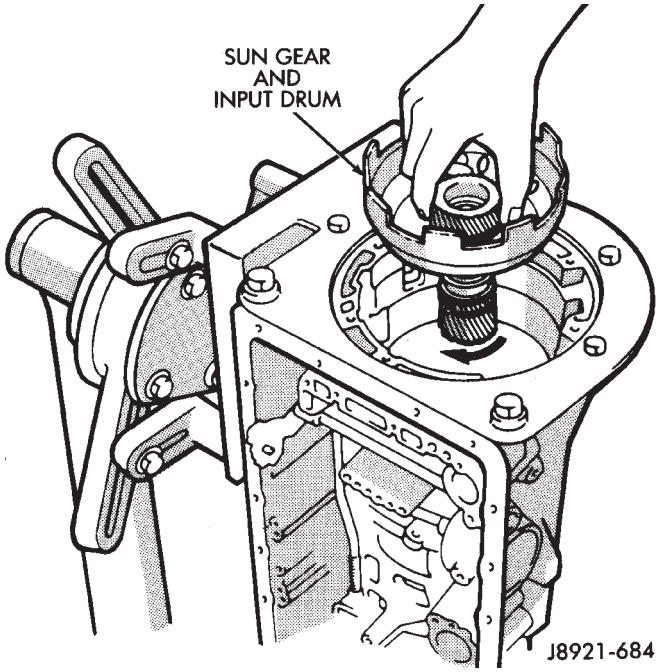

Fig. 17 Installing Sun Gear And Input Drum

(23) Install front planetary gear on sun gear (Fig. 18).

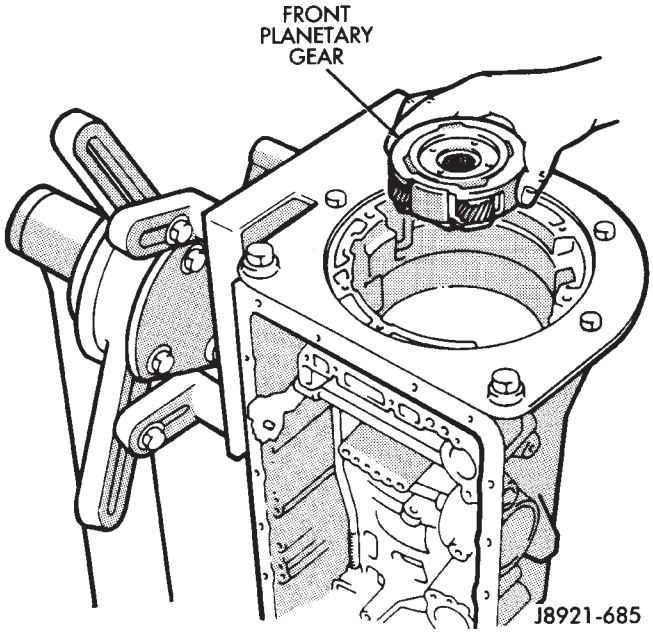

Fig. 18 Installing Front Planetary Gear

(24) Support output shaft with wood blocks (Fig. 19).

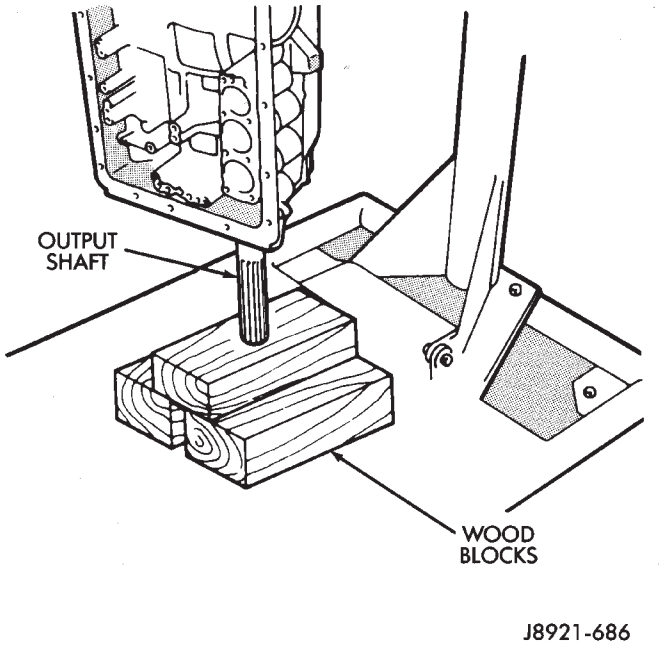

Fig. 19 Supporting Output Shaft

(25) Install planetary snap ring on sun gear with snap ring plier tool 7541 (Fig. 20).

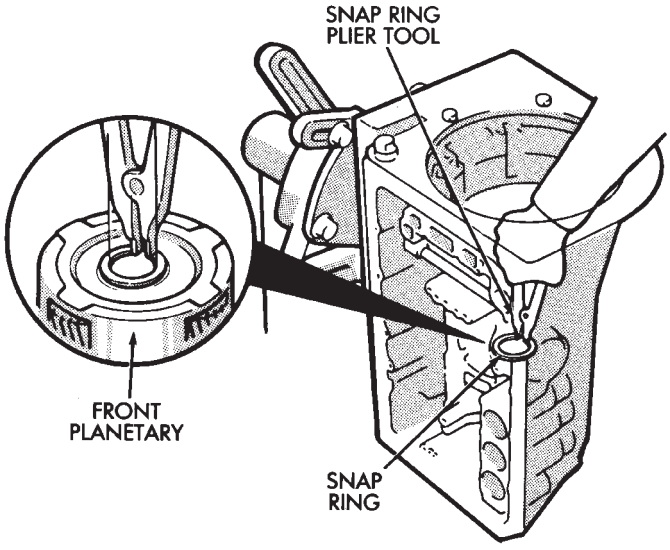

Fig. 20 Installing Front Planetary Snap Ring

(26) Install tabbed thrust race on front planetary gear (Fig. 21). Washer tabs face down and toward gear. Race outer diameter is 47.8 mm (1.882 in.). Inside diameter is 34.3 mm (1.350 in.).

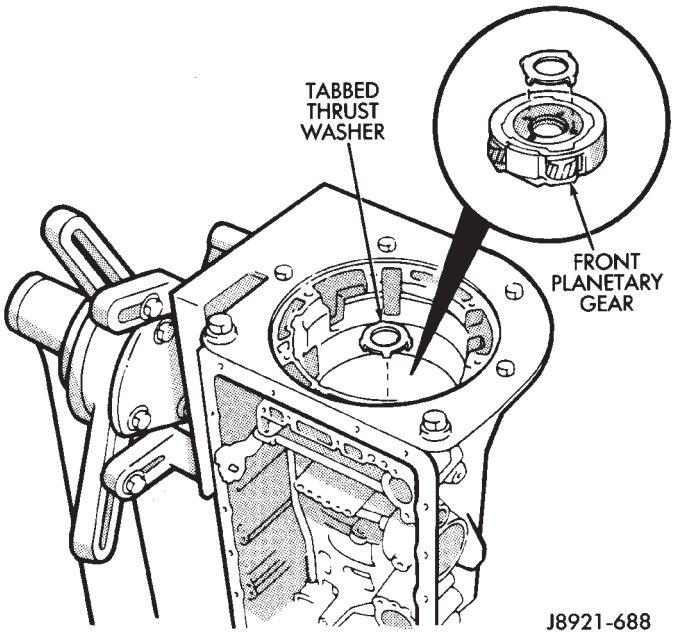

Fig. 21 Installing Planetary Thrust Race

(27) Install second coast brake band (Fig. 22).

(28) Install pin in second coast brake band. Then install retaining ring on pin (Fig. 23).

(29) Install thrust bearing and race in forward-direct clutch (Fig. 24). Coat bearing/race with petroleum jelly to hold them in place.

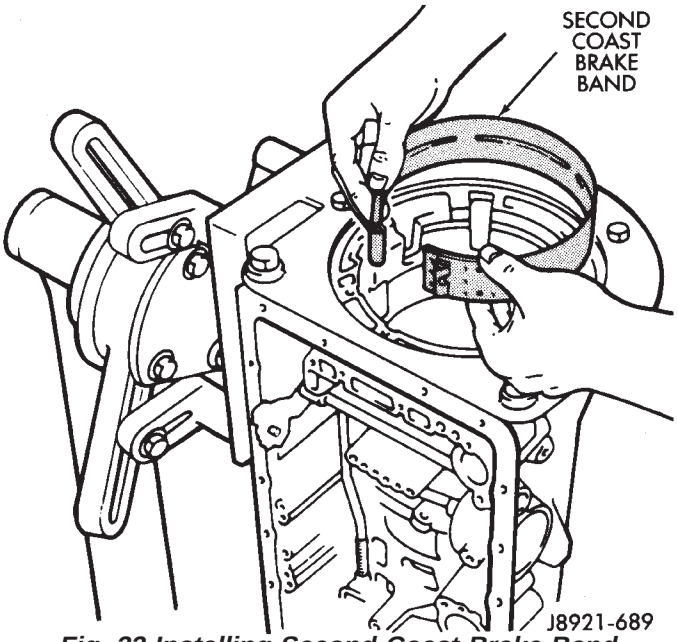

Fig. 22 Installing Second Coast Brake Band

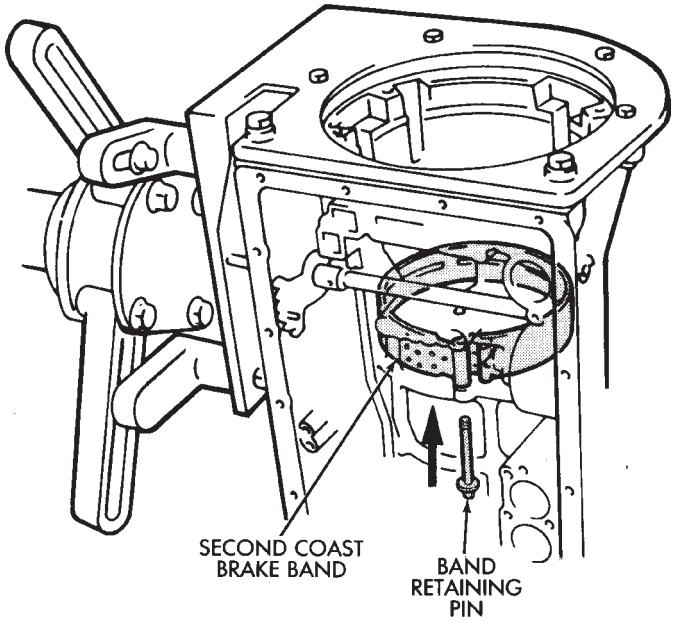

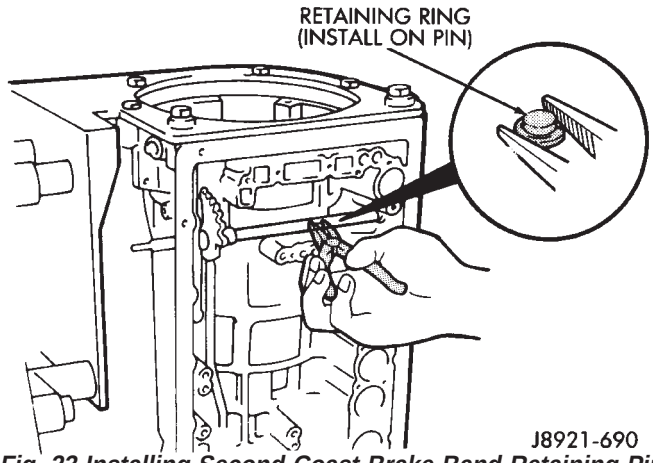

Fig. 23 Installing Second Coast Brake Band Retaining Pin

(30) Verify forward-direct clutch thrust bearing size.
- Race outer diameter is 48.9 mm (1.925 in.) and inside diameter is 26.0 mm (1.024 in.).
- Bearing outer diameter is 46.7 mm (1.839 in.) and inside diameter is 26.0 mm (1.024 in.).

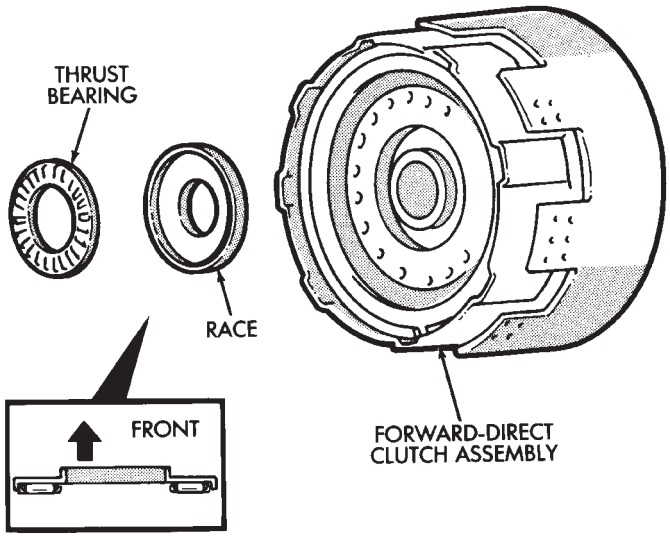

Fig. 24 Installing Forward-Direct Clutch Thrust Bearing And Race

(31) Coat front planetary ring gear race with petroleum jelly and install it in ring gear (Fig. 25).

(32) Verify ring gear race size. Outer diameter is 47.0 mm (1.850 in.) and inside diameter is 26.5 mm (1.045 in.).

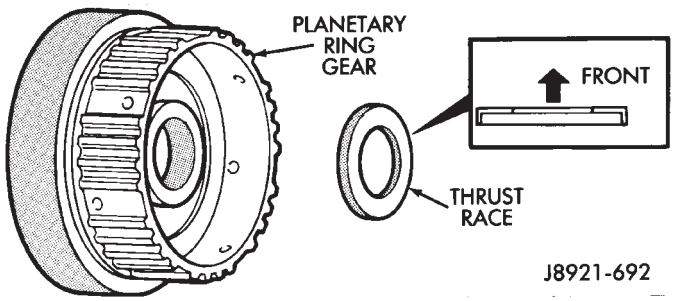

Fig. 25 Installing Planetary Ring Gear Race

(33) Align forward-direct clutch disc splines with screwdriver (Fig. 26).

(34) Align and install front planetary ring gear in forward-direct clutch (Fig. 27).

(35) Coat bearing and race with petroleum jelly and install them in ring gear (Fig. 28). Verify bearing/race size.
- Bearing outer diameter is 47.7 mm (1.878 in.) and inside diameter is 32.6 mm (1.283 in.).
- Race outer diameter is 53.6 mm (2.110 in.) and inside diameter is 30.6 mm (1.205 in.).

(36) Rotate front of transmission case downward and install assembled planetary gear/forward-direct clutch (Fig. 29).

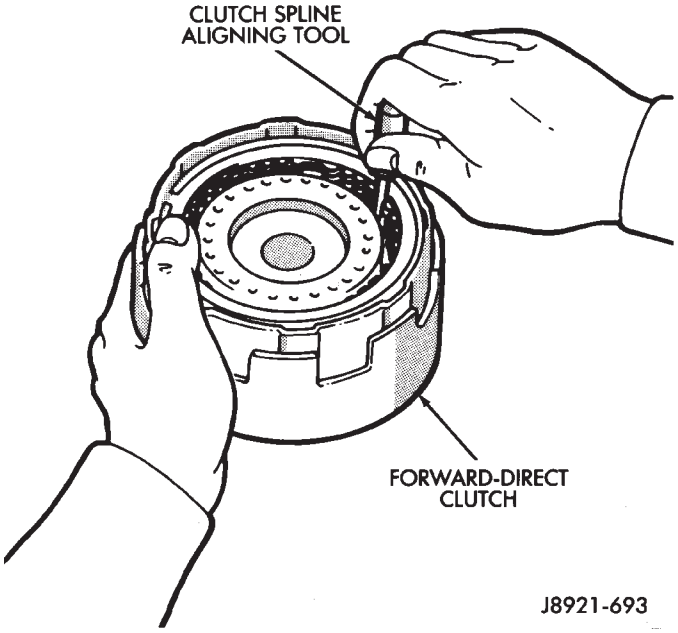

Fig. 26 Aligning Forward-Direct Clutch Splines

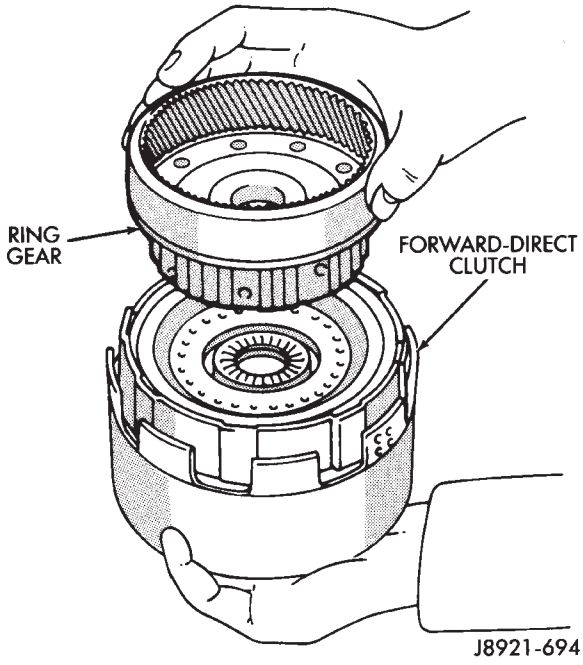

Fig. 27 Installing Front Planetary Ring Gear

(37) Check clearance between sun gear input drum and direct clutch drum (Fig. 30). Clearance should be 9.8 - 11.8 mm (0.386 - 0.465 in.). If clearance is incorrect, planetary gear/forward-direct clutch assembly is not seated or is improperly assembled. Remove, and correct if necessary.

(38) Coat thrust bearing and race assembly with petroleum jelly and install it on clutch shaft. Bearing faces up and toward case front as shown (Fig. 31).

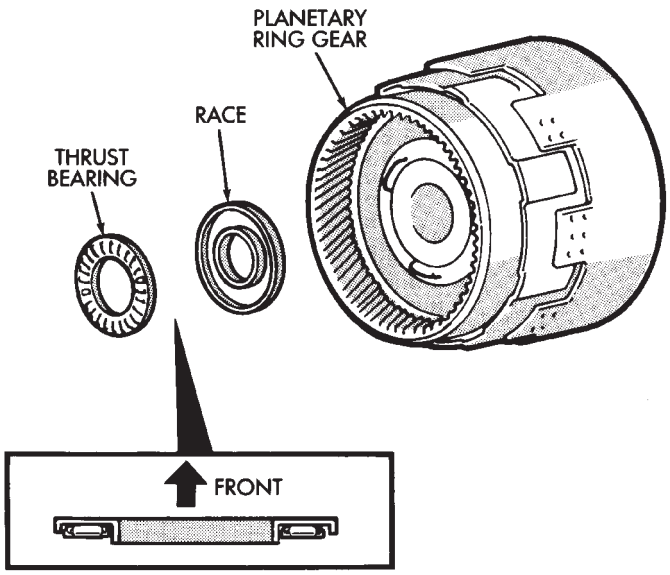

Fig. 28 Installing Ring Gear Bearing And Race

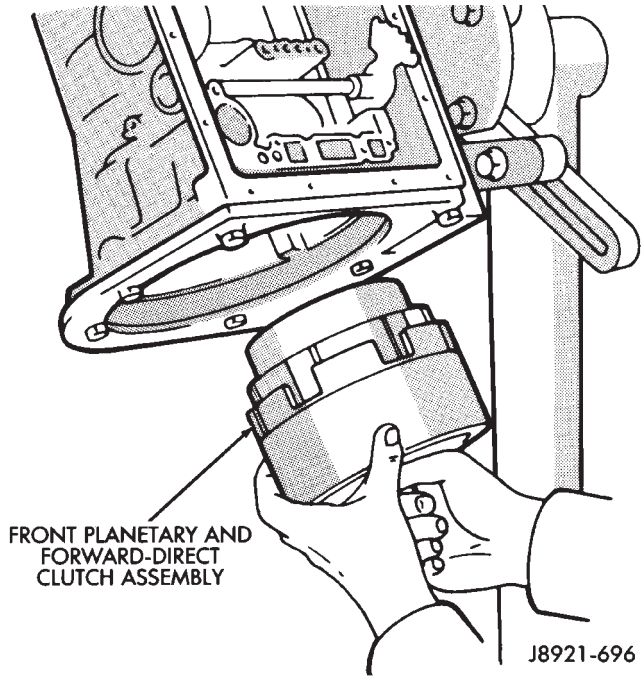

Fig. 29 Installing Front Planetary And Forward-Direct Clutch Assembly

Verify bearing/race size. Bearing and race outer diameter is 47.8 mm (1.882 in.) and inside diameter is 33.6 mm (1.301 in.).

(39) Assemble second coast brake piston components (Fig. 32).

(40) Install assembled second coast brake piston in case.

(41) Install replacement seals on second coast brake piston cover and install cover in case.

(42) Install second coast brake piston snap ring with snap ring plier tool (Fig. 33).

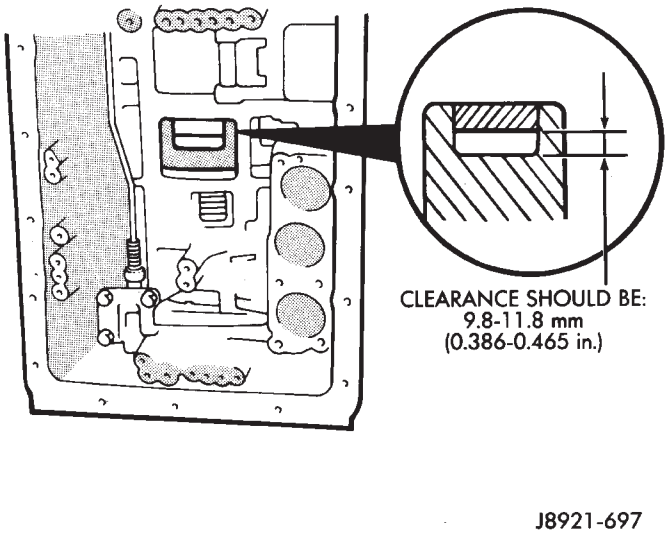

Fig. 30 Checking Input Drum-To-Direct Clutch Drum Clearance

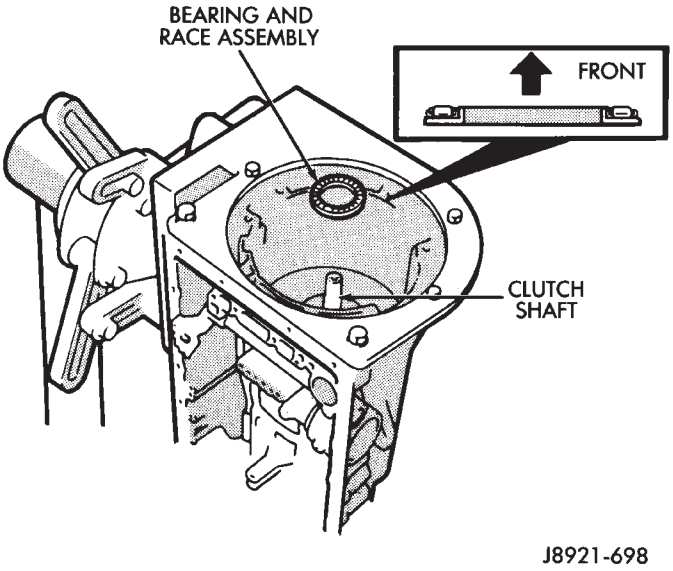

Fig. 31 Installing Clutch Shaft Thrust Bearing And Race Assembly

(43) Check second coast brake piston stroke as follows:

(a) Make reference mark on brake piston rod (Fig. 34).

(b) Apply 57-114 psi air pressure through feed hole (Fig. 34). Alternately apply and release air pressure to operate piston.

(c) Check stroke with gauge 7552 (Fig. 35).

(d) If stroke length is incorrect, piston, cover or snap ring is not seated. Reassemble and check stroke again if necessary.

(44) Coat thrust race and tabbed washer with petroleum jelly and install them on overdrive support (Fig. 36). Verify race size. Race outer diameter is 50.9 mm (2.004 in.) and inside diameter is 36.2 mm (1.426 in.).

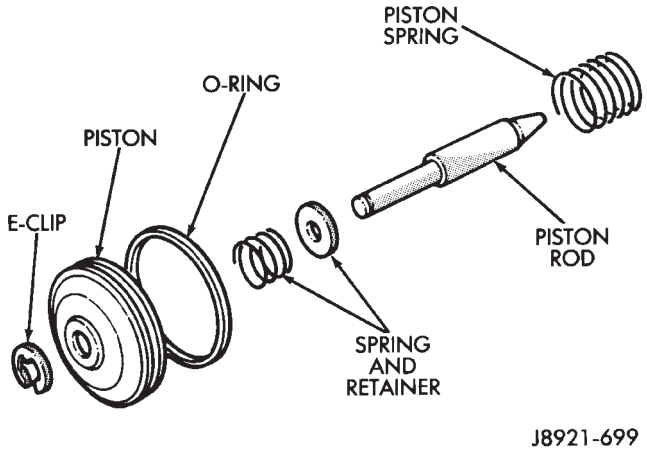

Fig. 32 Assembling Second Coast Brake Piston

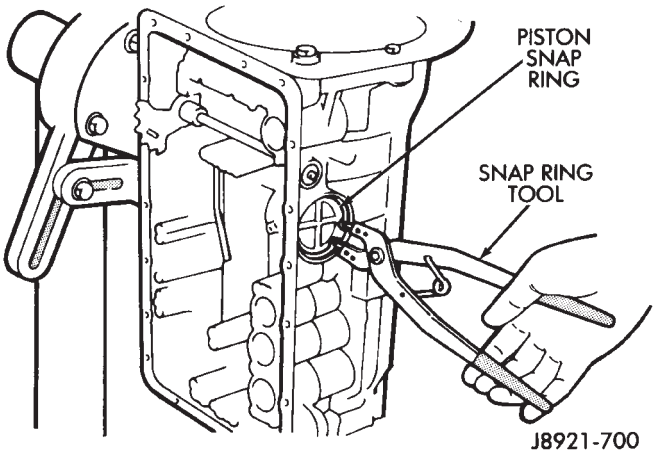

Fig. 33 Installing Second Coast Brake Piston Snap Ring

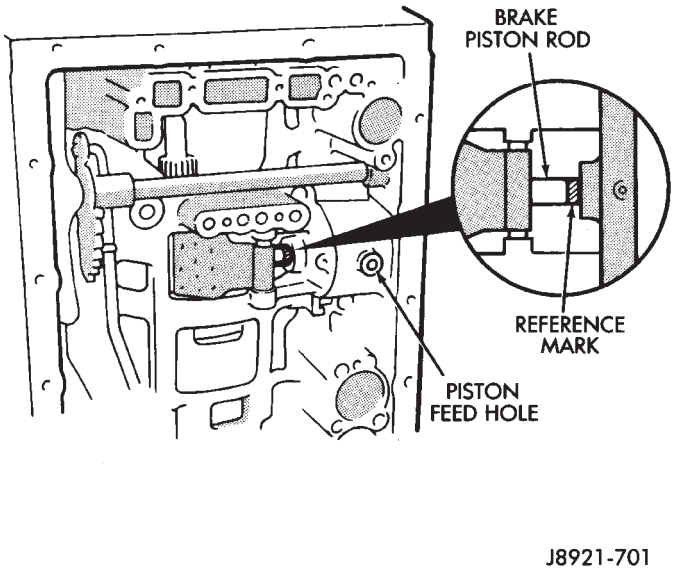

Fig. 34 Marking Brake Piston Rod

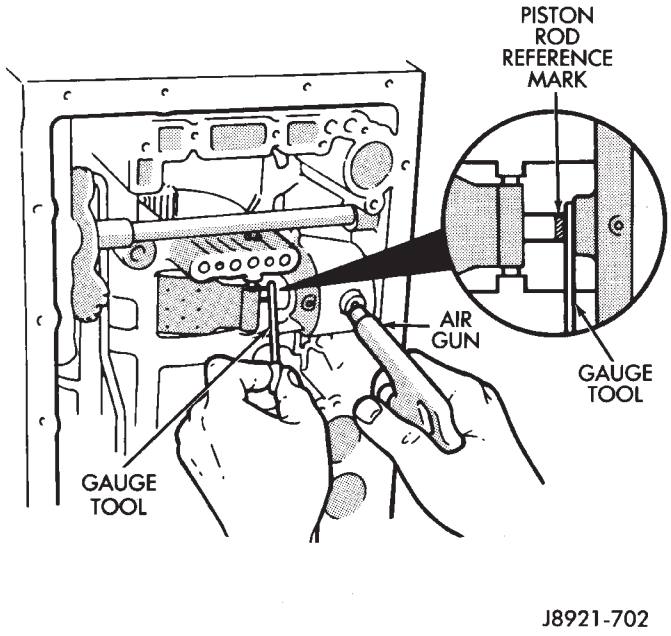

Fig. 35 Checking Second Coast Brake Piston Stroke

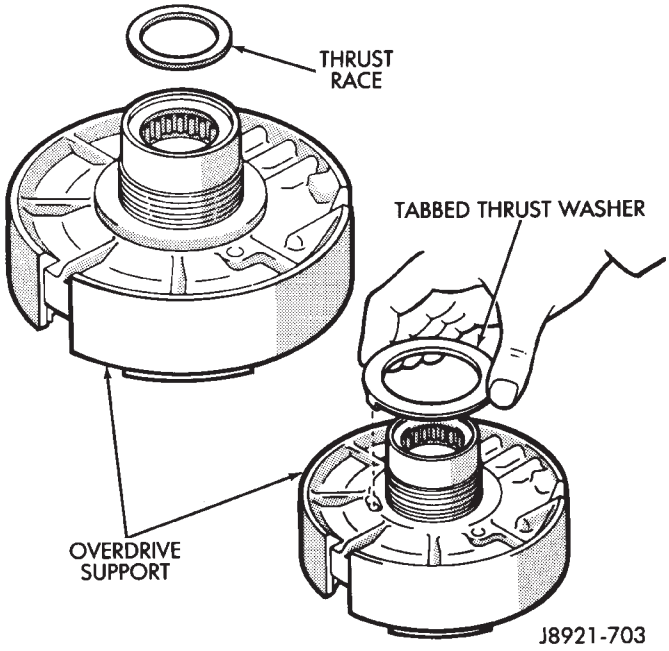

Fig. 36 Installing Overdrive Support Thrust Race And Washer

(45) Install overdrive support in case. Use two long bolts to help align and guide support into position (Fig. 37).

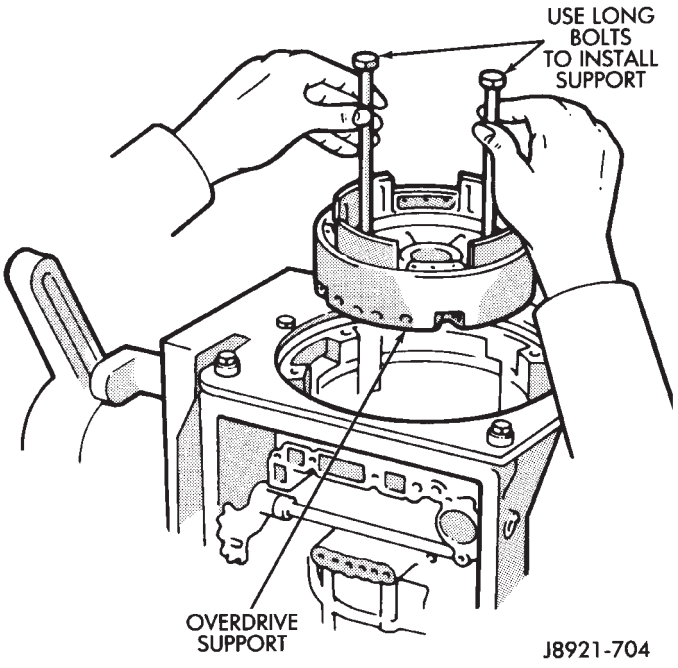

Fig. 37 Installing Overdrive Support

(46) Install overdrive support snap ring with Snap Ring Plier Tool 7540 (Fig. 38). Chamfered side of snap ring faces up and toward case front. **Snap ring ends must be aligned with case opening with ring ends approximately 24 mm (0.94 in.) from centerline of case opening.**

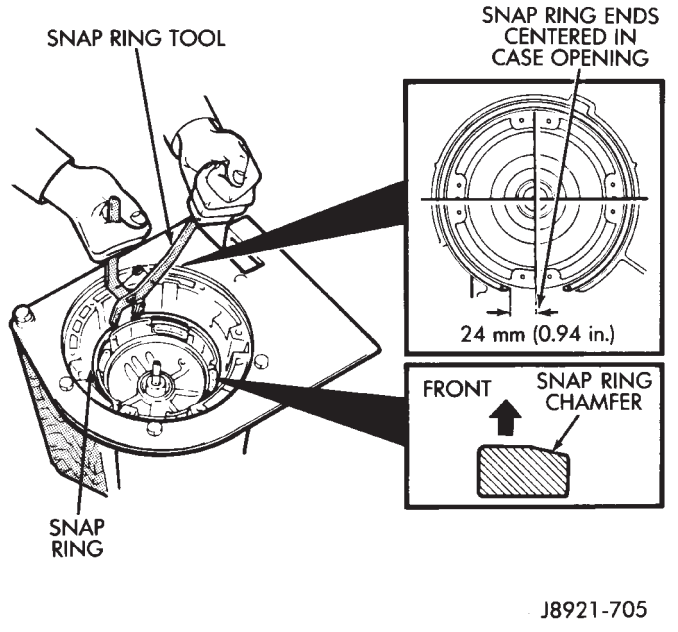

Fig. 38 Installing Overdrive Support Snap Ring

(47) Install and tighten overdrive support bolts to 25 N·m (19 ft-lbs) torque (Fig. 39).

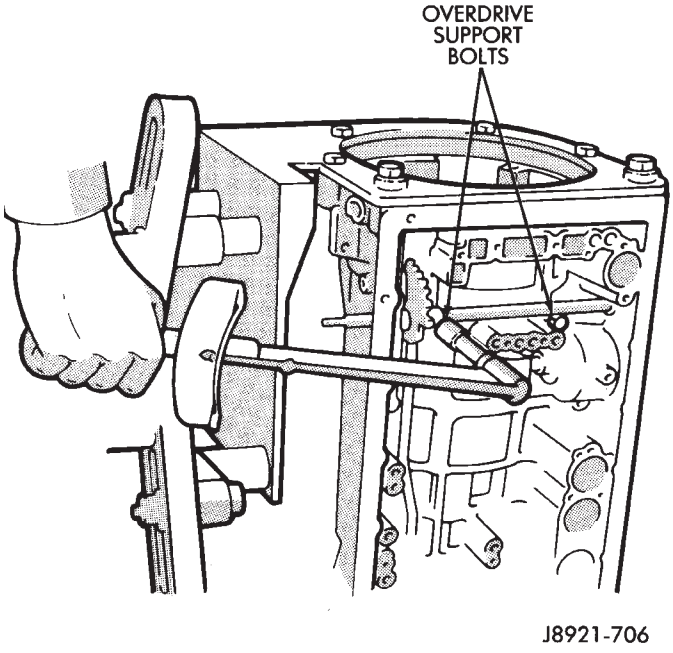

Fig. 39 Installing Overdrive Support Bolts

(48) Check output shaft end play with dial indicator (Fig. 40). End play should be 0.27 - 0.86 mm (0.0106 - 0.0339 in.).

(49) If output shaft end play is incorrect, one or more of installed components is not seated. Reassemble as necessary and check end play again.

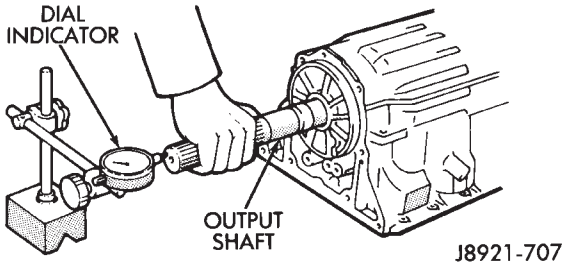

Fig. 40 Checking Output Shaft End Play

(50) Install overdrive brake clutch pack (Fig. 41). Install thickest plate first. Rounded edge of plate faces up. Install first disc followed by another plate until four discs and three plates are installed.

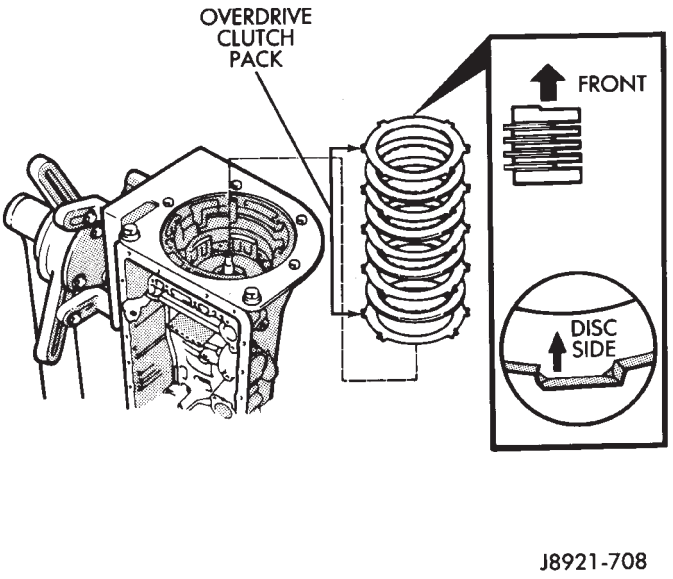

Fig. 41 Installing Overdrive Brake Clutch Pack

(51) Install stepped ring retainer plate with flat side facing disc. Then install brake pack snap ring (Fig. 42).

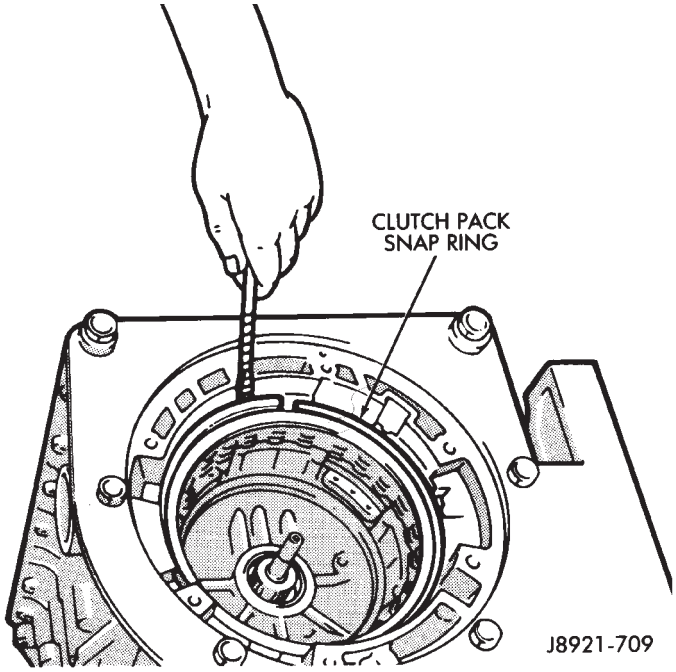

Fig. 42 installing Overdrive Brake Snap Ring

(52) Check overdrive brake piston stroke as follows:

(a) Mount Gauge 7546 in dial indicator and position gauge tool against overdrive brake piston (Fig. 43).

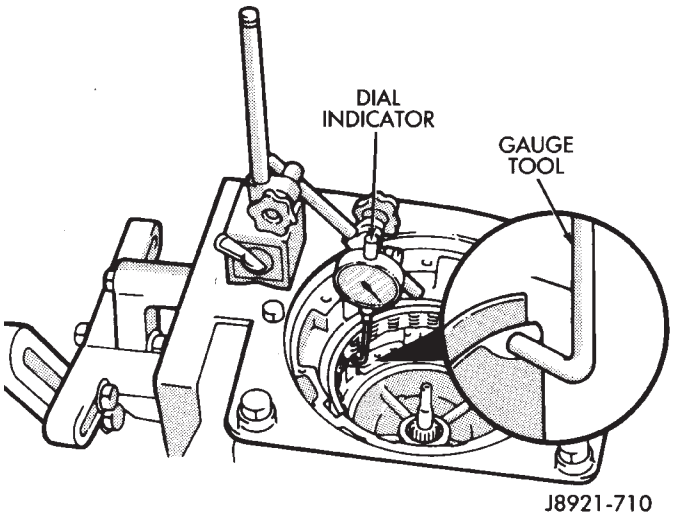

Fig. 43 Positioning Gauge Tool And Dial Indicator

(b) Apply and release overdrive brake piston with compressed air and note piston stroke length on dial indicator. Apply air pressure through feed hole in case (Fig. 44).

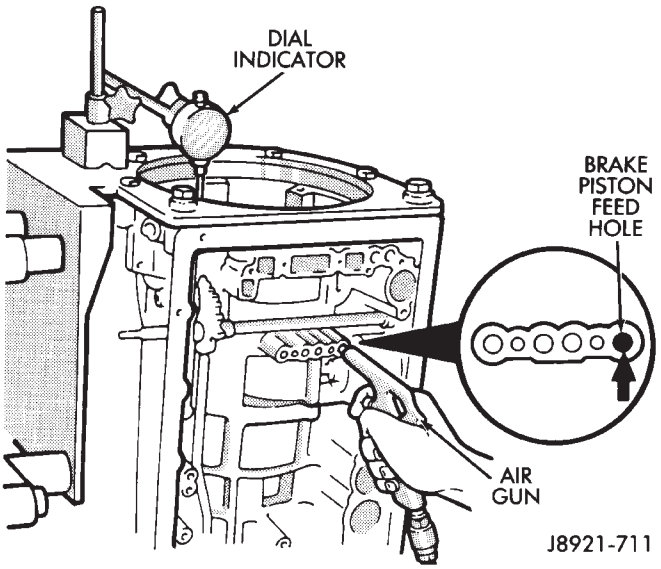

Fig. 44 Checking Overdrive Brake Piston Stroke

(c) Piston stroke length should be 1.40 - 1.70 mm (0.55 - 0.66 in.).

(d) If stroke is incorrect, brake pack or piston is installed incorrectly. Check and correct as necessary and measure piston stroke again.

(53) Remove dial indicator and gauge tool.

(54) Remove overdrive brake piston snap ring and remove overdrive clutch pack components.

(55) Coat overdrive lower race, thrust bearing and upper race with petroleum jelly and install them in overdrive support (Fig. 45). Be sure races and bearing are assembled and installed as shown.

(56) Verify bearing/race sizes before proceeding. Bearing-race sizes are:

• Outer diameter of lower race is 47.8 mm (1.882 in.) and inside diameter is 34.3 mm (1.350 in.).
• Outer diameter of bearing is 47.7 mm (1.878 in.) and inside diameter is 32.7 mm (1.287 in.).
• Outer diameter of upper race is 47.8 mm (1.882 in.) and inside diameter is 30.7 mm (1.209 in.).

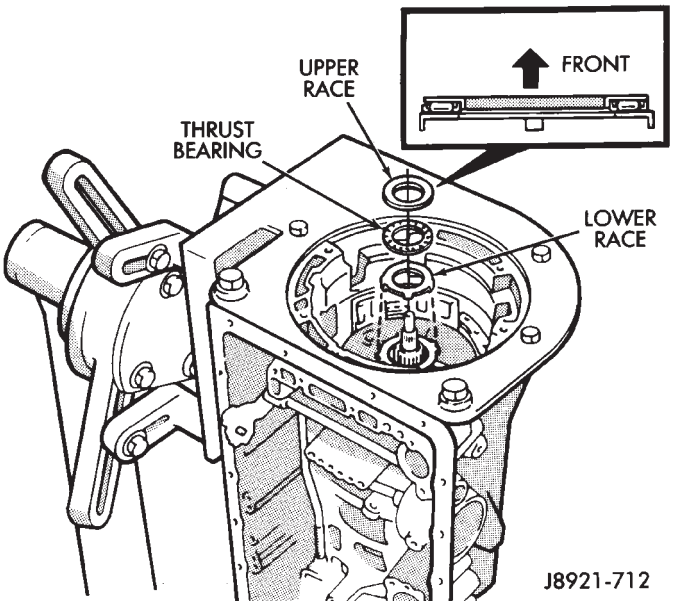

Fig. 45 Installing Overdrive Support Thrust Bearing And Races

(57) Install overdrive planetary ring gear in support (Fig. 46).

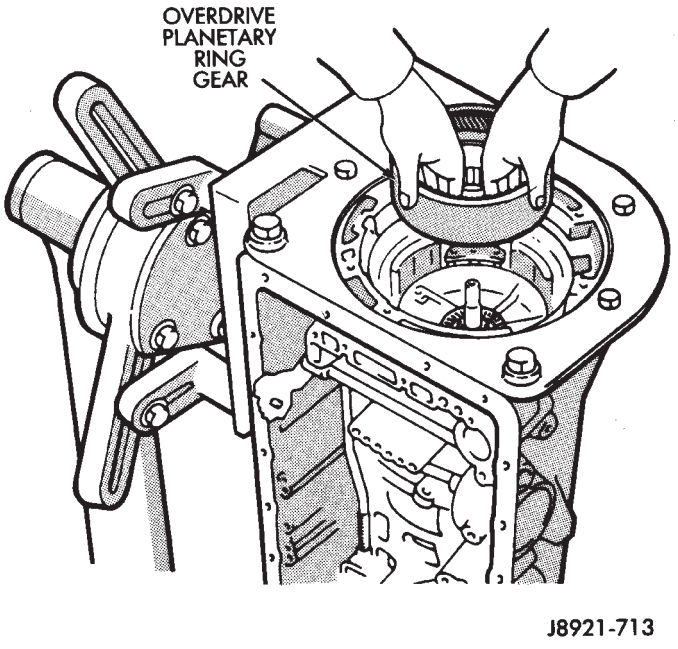

Fig. 46 Installing Overdrive Planetary Ring Gear

(58) Coat ring gear thrust race and thrust bearing assembly with petroleum jelly and install them in gear (Fig. 47).

(59) Verify bearing/race size before proceeding.

• Outer diameter of ring gear race-bearing is 47.8 mm (1.882 in.) and inside diameter is 24.2 mm (0.953 in.).
• Outer diameter of bearing is 46.8 mm (1.844 in.) and inside diameter is 26.0 mm (1.024 in.).

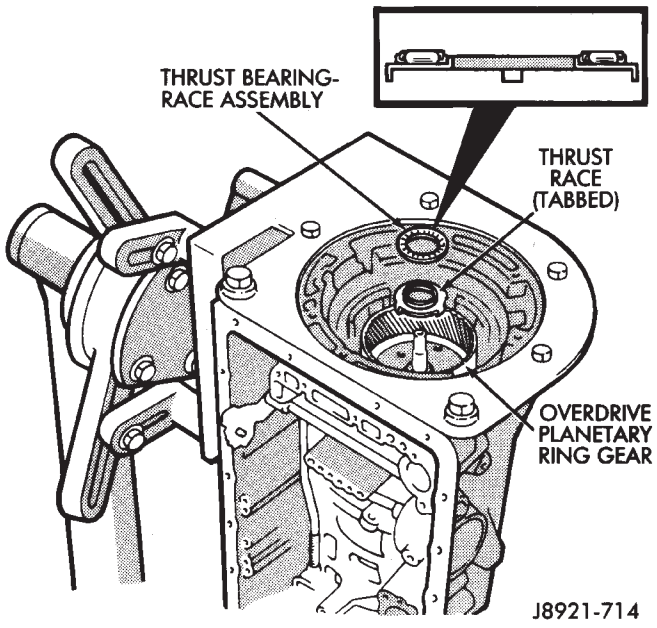

Fig. 47 Installing Ring Gear Thrust Bearing And Race

(60) Coat tabbed thrust race with petroleum jelly and install it on planetary gear (Fig. 48). Race outer diameter is 41.8 mm (1.646 in.) and inside diameter is 27.1 mm (1.067 in.).

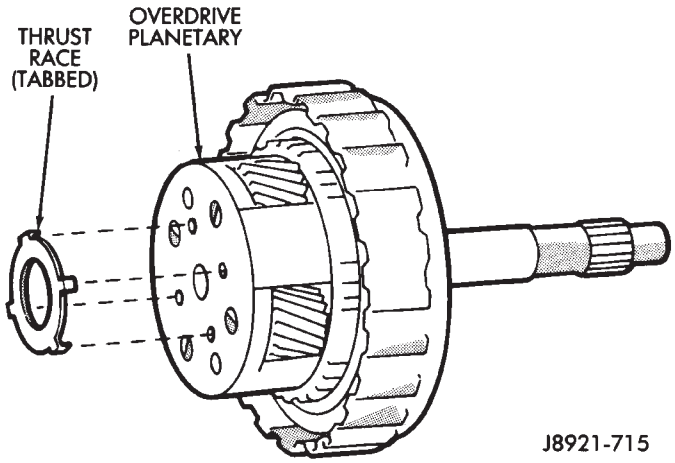

Fig. 48 Installing Planetary thrust Race

(61) Install assembled overdrive planetary gear and clutch (Fig. 49).

(62) Coat thrust bearing and race assembly with petroleum jelly and install it on clutch input shaft (Fig. 50). Bearing and race outer diameter is 50.2 mm (1.976 in.) and inside diameter is 28.9 mm (1.138 in.).

(63) Install overdrive brake pack as follows:

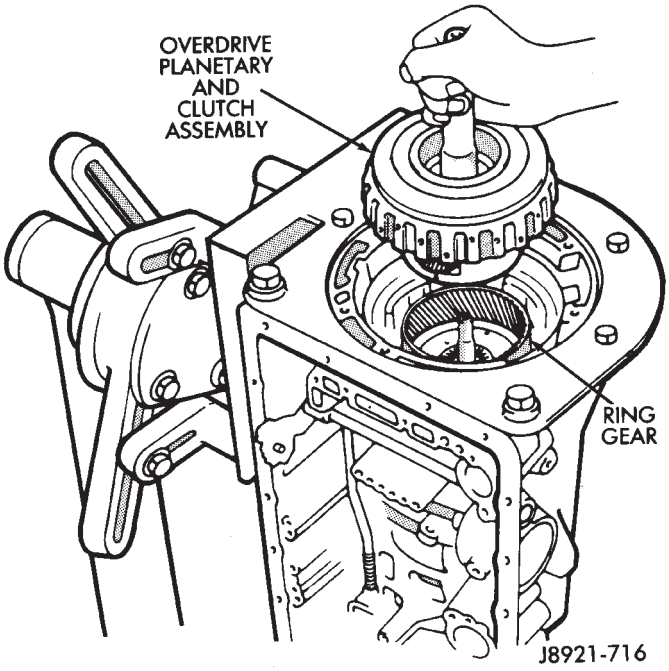

Fig. 49 Installing Overdrive Planetary And Clutch Assembly

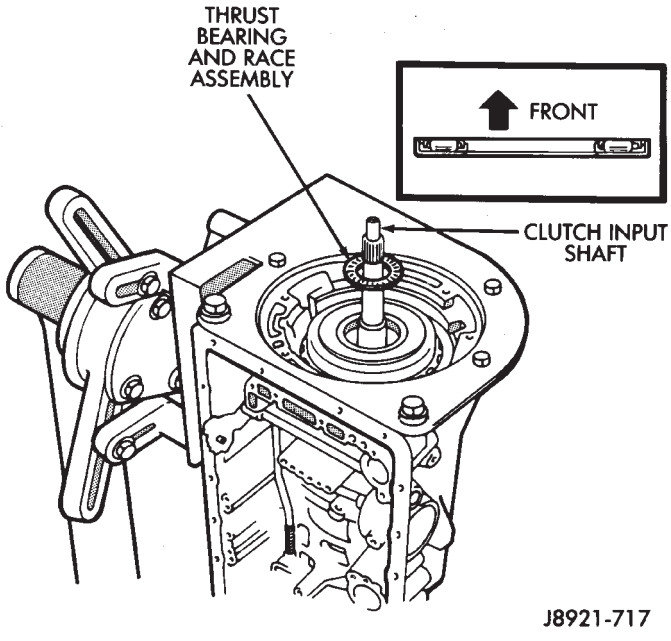

Fig. 50 Installing Input Shaft Thrust Bearing And Race Assembly

(a) Install 4.0 mm (0.157 in.) thick plate first. Rounded edge of plate must face upward.

(b) Install a disc followed by a plate until the required number of discs and plates are installed. Be sure to install the stepped plate last with the flat side of the plate facing the disc (Fig. 51).

(c) Confirm that four discs and three plates have been installed.

(64) Install clutch pack snap ring (Fig. 52).

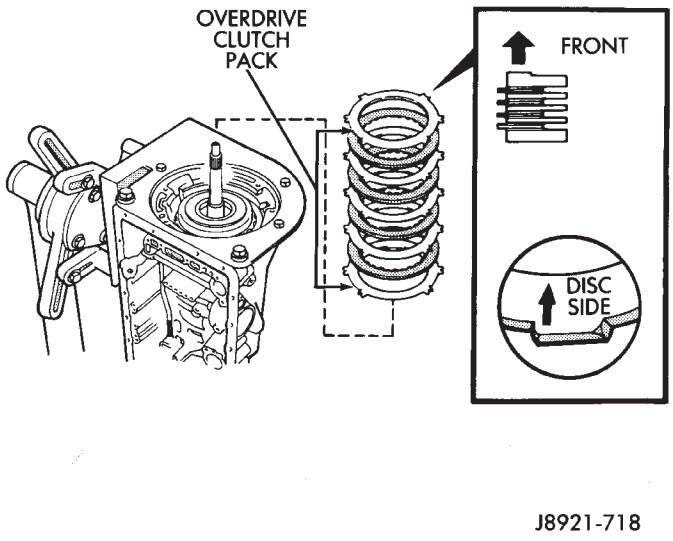

Fig. 51 Installing Overdrive Clutch Pack

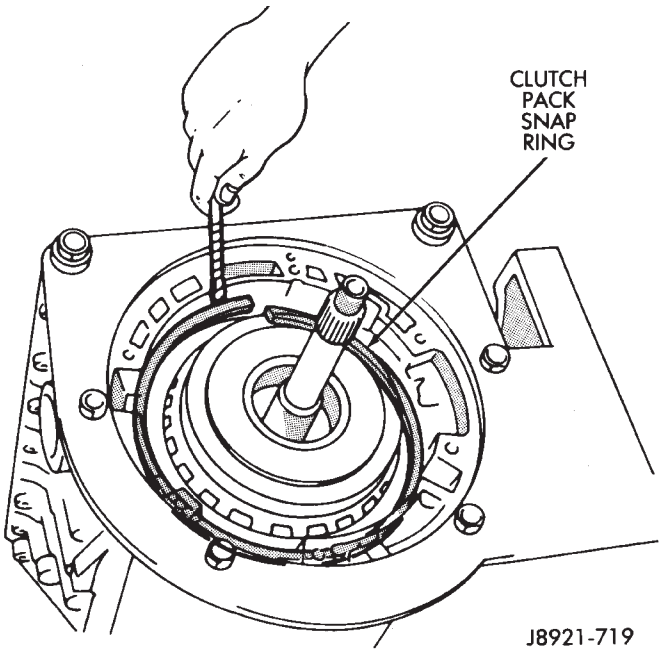

Fig. 52 Installing Clutch Pack Snap Ring

(65) Coat thrust bearing race with petroleum jelly and install it in oil pump (Fig. 53). Bearing race outer diameter is 47.2 mm (1.858 in.) and inside diameter is 28.1 mm (1.106 in.).

(66) Lubricate and install replacement O-ring on oil pump body.

(67) Install oil pump in case. Align pump and case bolt holes and carefully ease pump into place (Fig. 54).

CAUTION: Do not use force to seat the pump. The seal rings on the stator shaft could be damaged if they bind or stick to the direct clutch drum.

(68) Tighten oil pump bolts to 22 N·m (16 ft. lbs.) torque.

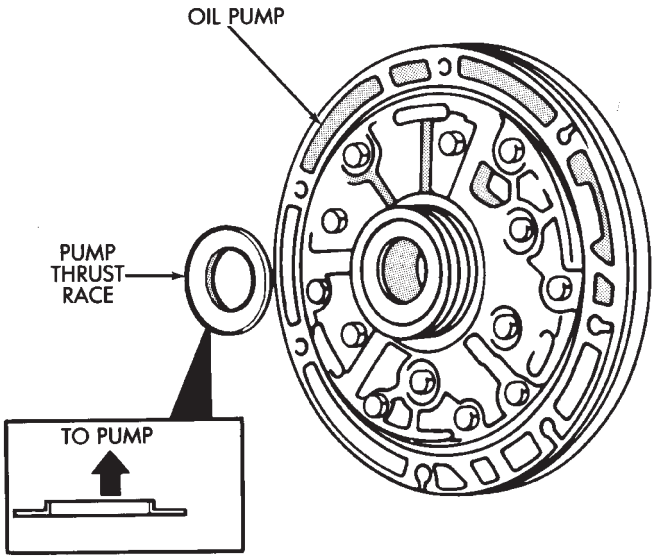

Fig. 53 Installing Oil Pump Thrust Race

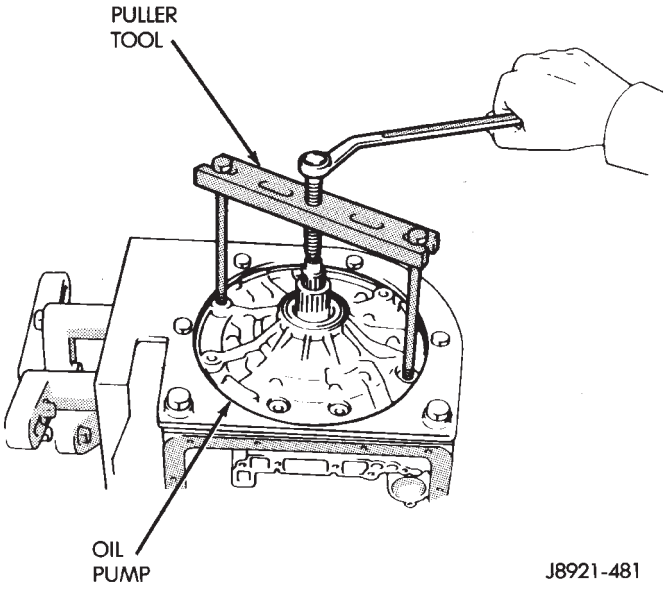

Fig. 54 Installing Oil Pump

(69) Verify input shaft rotation. Shaft should rotate smoothly and not bind.

(70) Lubricate and install new O-ring on transmission throttle cable adapter and install cable in case (Fig. 55).

(71) Check clutch and brake operation. Operate clutches and brakes with compressed air applied through feed holes in case (Fig. 56). Listen for clutch and brake application. If you do not hear a clutch or brake apply, disassemble transmission and repair fault before proceeding. **It is necessary to block the overdrive clutch accumulator feed hole No. 8 (Fig. 56) in order to check direct clutch operation.**

(72) Lubricate and install new O-rings on accumulator pistons (Fig. 57).

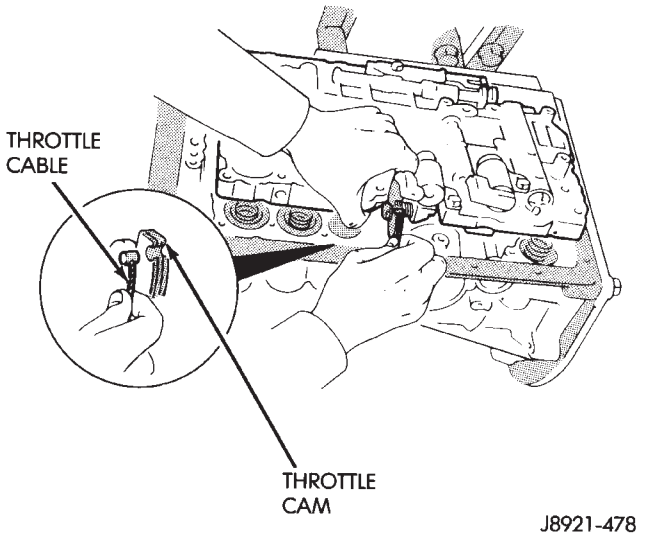

Fig. 55 Installing Transmission Throttle Cable

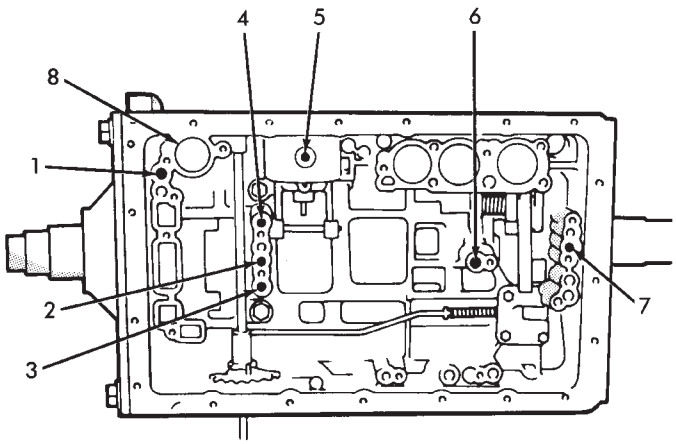

1. OVERDRIVE DIRECT CLUTCH FEED
2. DIRECT CLUTCH FEED
3. FORWARD CLUTCH FEED
4. OVERDRIVE BRAKE FEED
5. SECOND COAST BRAKE FEED
6. SECOND BRAKE FEED
7. FIRST-REVERSE BRAKE FEED
8. OVERDRIVE CLUTCH ACCUMULATOR PISTON HOLE (BLOCK THIS HOLE WHEN CHECKING DIRECT CLUTCH OPERATION)

J8921-721

Fig. 56 Clutch And Brake Feed Hole Locations

(73) Assemble and install accumulator pistons and springs (Fig. 57).

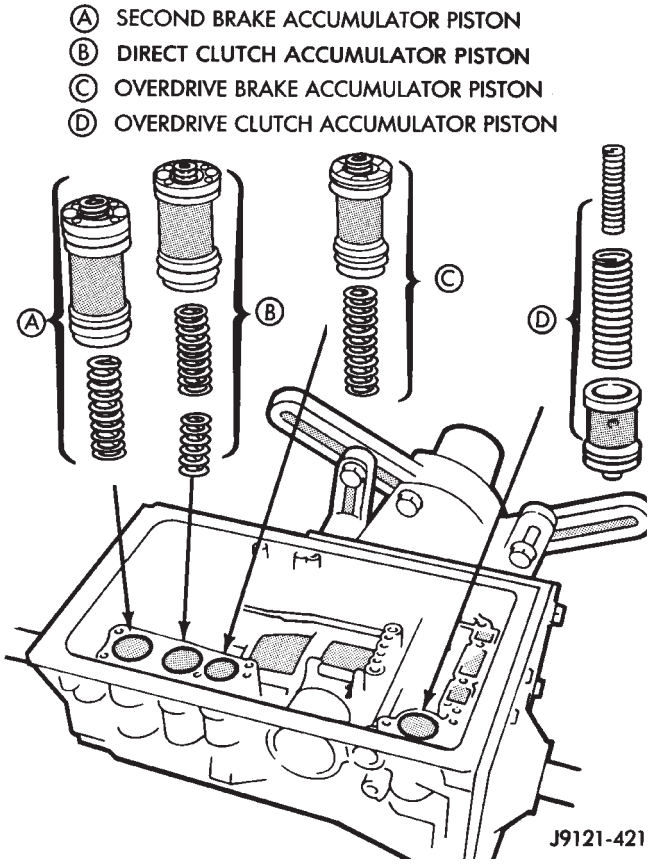

Fig. 57 Accumulator Piston And Spring Installation

(74) Install new check ball body and spring (Fig. 58).

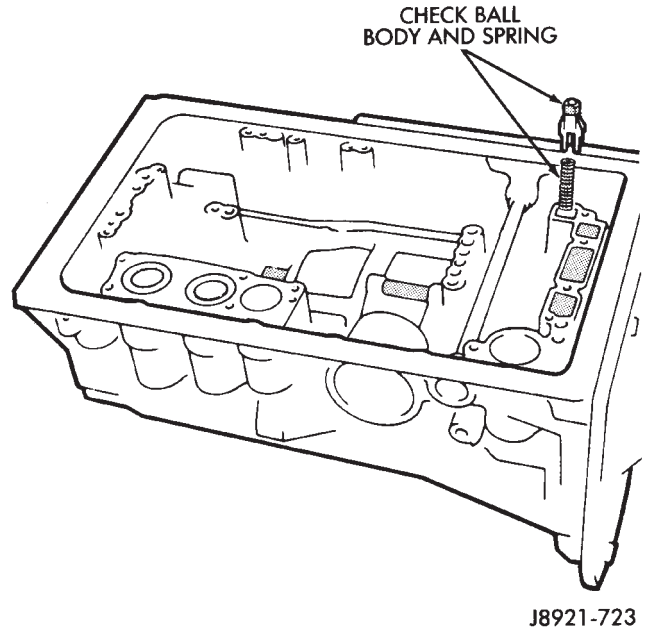

Fig. 58 Installing Check Ball Body And Spring

(75) Position valve body on case (Fig. 59).

(76) Install detent spring (Fig. 59).

(77) Align manual valve, detent spring and shift sector (Fig. 59).

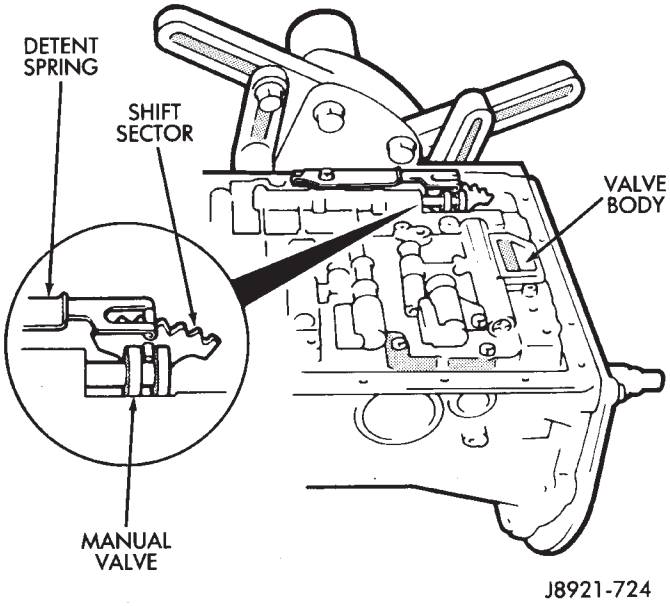

Fig. 59 Aligning Manual Valve, Shift Sector And Detent Spring

(78) Connect transmission throttle cable to throttle valve cam (Fig. 60).

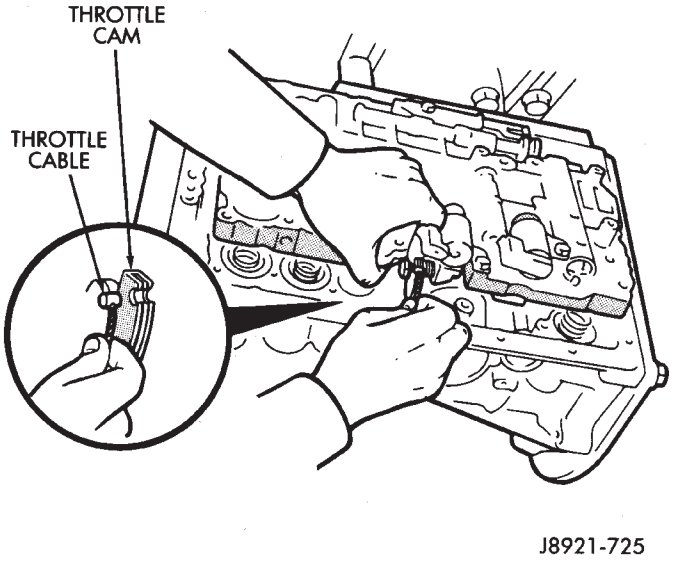

Fig. 60 Connecting Transmission Throttle Cable

(79) Install and tighten valve body-to-case bolts to 10 N·m (7 ft. lbs.) torque.

(80) Connect valve body solenoid wires to solenoids (Fig. 61).

(81) Install new O-ring on solenoid harness adapter and secure adapter to case.

(82) Install valve body oil tubes (Fig. 62). Tap tubes into place with a plastic mallet. Be sure the flanged tube ends and straight tube ends are installed as shown.

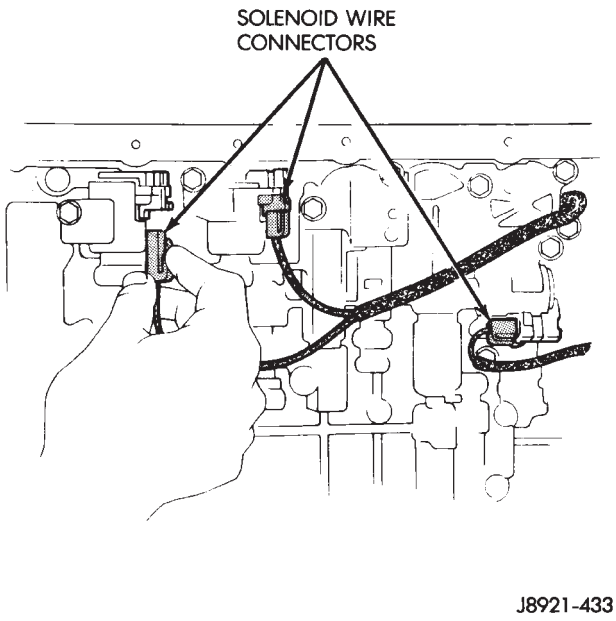

Fig. 61 Connecting Valve Body Solenoid Wires

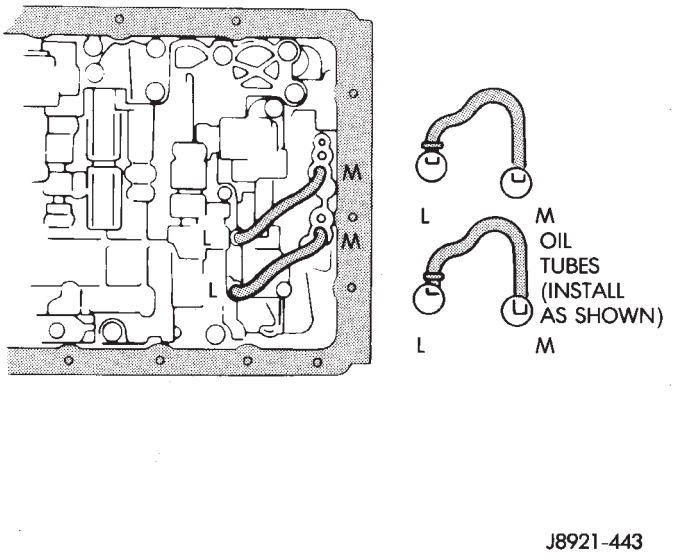

Fig. 62 Installing Valve Body Oil Tubes

(83) Install new gaskets on oil screen and install screen on valve body. Tighten screen bolts to 10 N·m (7 ft. lbs.) torque.

(84) Install magnet in oil pan. Be sure magnet does not interfere with valve body oil tubes.

(85) Apply Loctite 599 to sealing surface of oil pan. Sealer bead should be at least 3 mm (1/8 in.) wide. Install pan on case and tighten pan bolts to 7 N·m (65 in. lbs.) torque.

(86) Install transmission speed sensor rotor and key on output shaft (Fig. 63).

(87) Install spacer and speedometer drive gear on output shaft. Then install retaining snap ring (Fig. 64).

(88) Apply bead of Loctite 599 sealer to sealing surface at rear of case (Fig. 65).

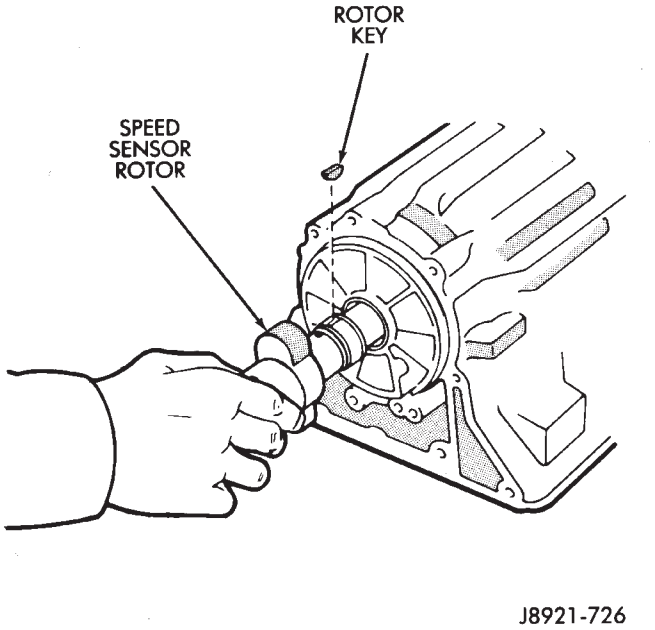

Fig. 63 Installing Transmission Speed Sensor Rotor And Key

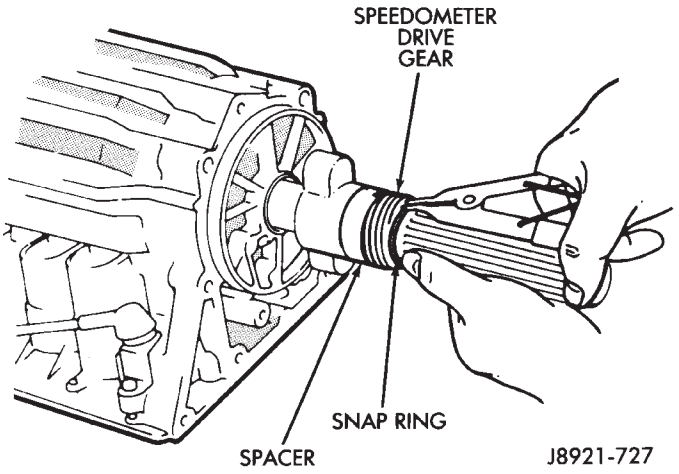

Fig. 64 Installing Spacer And Speedometer Drive Gear

(89) Install adapter housing on transmission. Tighten adapter bolts to 34 N·m (25 ft. lbs.) torque.

(90) Install transmission speed sensor (Fig. 66). Tighten sensor bolt to 7.4 N·m (65 in. lbs.) torque and connect sensor wire harness connector.

(91) Install converter housing (Fig. 67). Tighten 12 mm diameter housing bolts to 57 N·m (42 ft. lbs.) torque. Tighten 10 mm diameter housing bolts to 34 N·m (25 ft. lbs.) torque.

(92) Install transmission shift lever on manual valve shaft. Do not install lever attaching nut at this time.

(93) Move transmission shift lever fully rearward. Then move lever two detent positions forward.

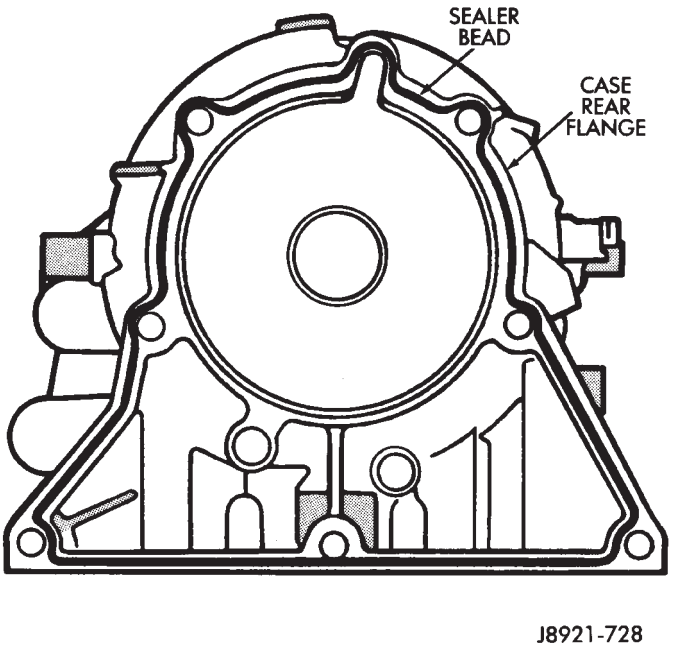

Fig. 65 Applying Sealer To Case Rear Flange

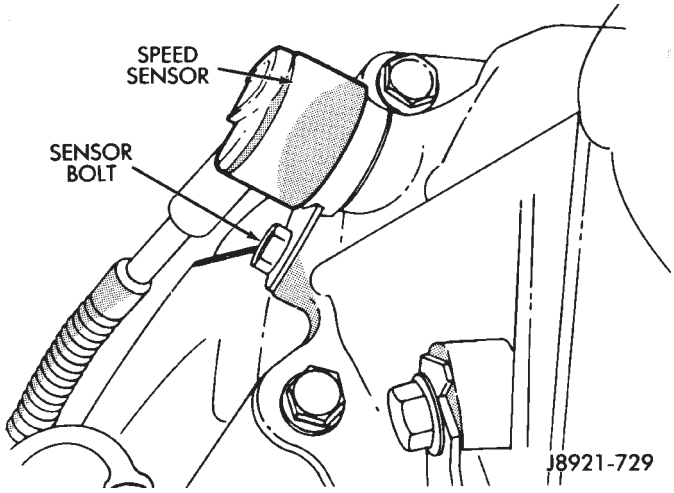

Fig. 66 Installing Transmission Speed Sensor

(94) Mount park/neutral position switch on manual valve shaft and tighten switch adjusting bolt just enough to keep switch from moving (Fig. 68).

(95) Install park/neutral position switch tabbed washer and retaining nut (Fig. 68). Tighten nut to 6.9 N·m (61 in. lbs.) torque, but do not bend any of the washer tabs against the nut at this time.

(96) Align park/neutral position switch standard line with groove or flat on manual shaft (Fig. 68).

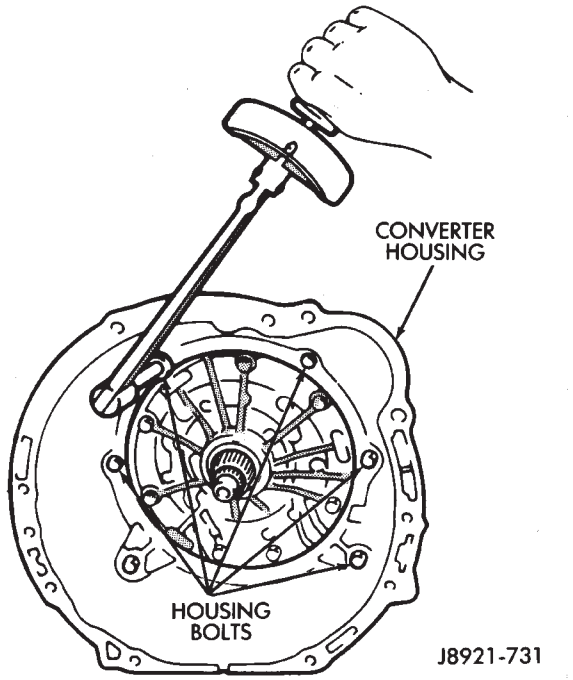

Fig. 67 Installing Converter Housing

(97) Tighten park/neutral position switch adjusting bolt to 13 N·m (9 ft. lbs.) torque.

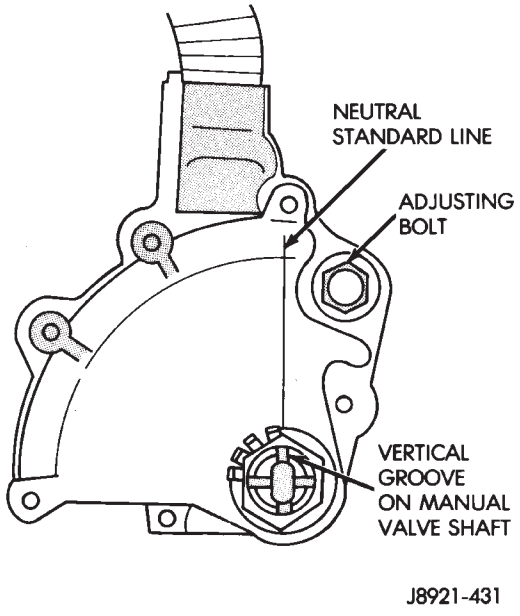

Fig. 68 Park/Neutral Position Switch Installation/ Adjustment

(98) Install transmission shift lever on manual valve shaft. Tighten lever attaching nut to 16 N·m (12 ft. lbs.) torque.

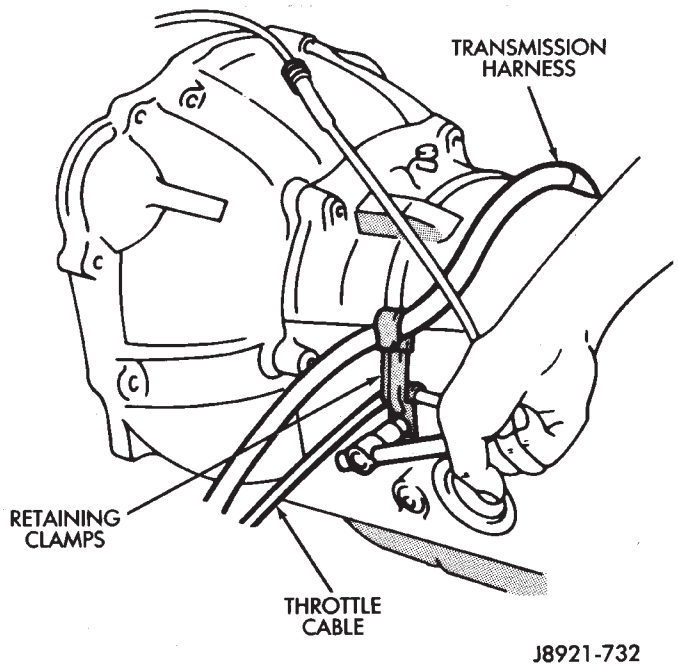

Fig. 69 Installing Cable/Harness Clamps

(99) Install retaining clamp for wire harness and throttle cable (Fig. 69).

(100) Install torque converter.

(101) Verify that converter is seated by measuring distance between converter housing flange and one of the converter mounting pads (Fig. 70). Use straightedge and vernier calipers to measure distance. On 6-cyl. transmissions, distance should be 16.5 mm (0.650 in.).

(102) Secure converter in transmission with C-clamp or metal strapping. Do this before mounting transmission on jack or moving transmission under vehicle.

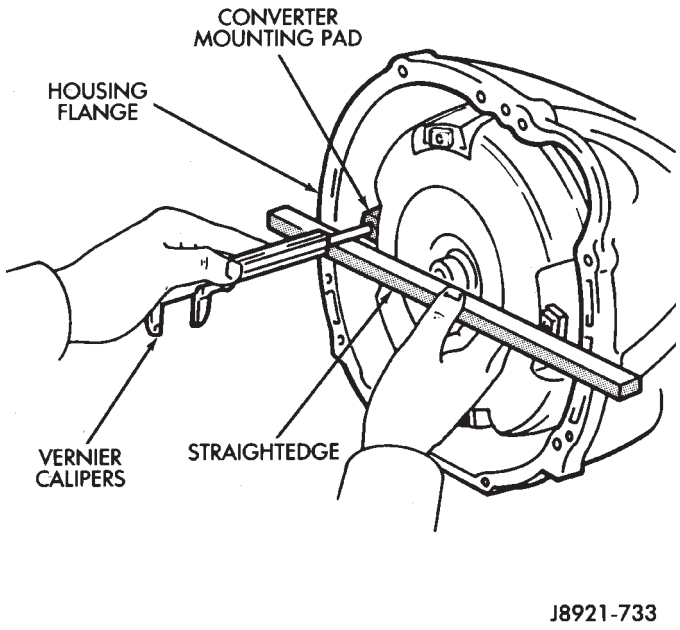

Fig. 70 Checking Converter Installation

(103) Install lower half of transmission fill tube (install upper half after transmission is in vehicle).

CAUTION: The transmission cooler and lines must be reverse flushed if overhaul corrected a malfunction that generated sludge, metal particles, or clutch friction material. The torque converter should also be replaced if contaminated by the same malfunction. Debris and residue not flushed from the cooler and lines will flow back into the transmission and converter. The result will be a repeat failure and shop comeback.

NP231 TRANSFER CASE

INDEX

	page		page
General Information	283	Speedometer Service	287
Overhaul Cleaning and Inspection	294	Transfer Case Assembly	294
Shift Lever Installation (XJ)	286	Transfer Case Disassembly and Overhaul	289
Shift Lever Installation (YJ)	286	Transfer Case Identification	284
Shift Lever Removal (XJ)	286	Transfer Case Installation	288
Shift Lever Removal (YJ)	286	Transfer Case Lubricant and Fill Level	284
Shift Linkage Adjustment	286	Transfer Case Removal	287

GENERAL INFORMATION

The NP231 is a part-time transfer case with a low range reduction gear system (Fig. 1). The NP231 has three operating ranges plus a Neutral position. A low range system provides a reduction ratio for increased low speed torque capability.

The NP231 is the Command Trac transfer case. It is used in XJ and YJ models. Two versions are used. One version retains the synchronizer components used in previous models. A newly introduced version is not equipped with synchro components.

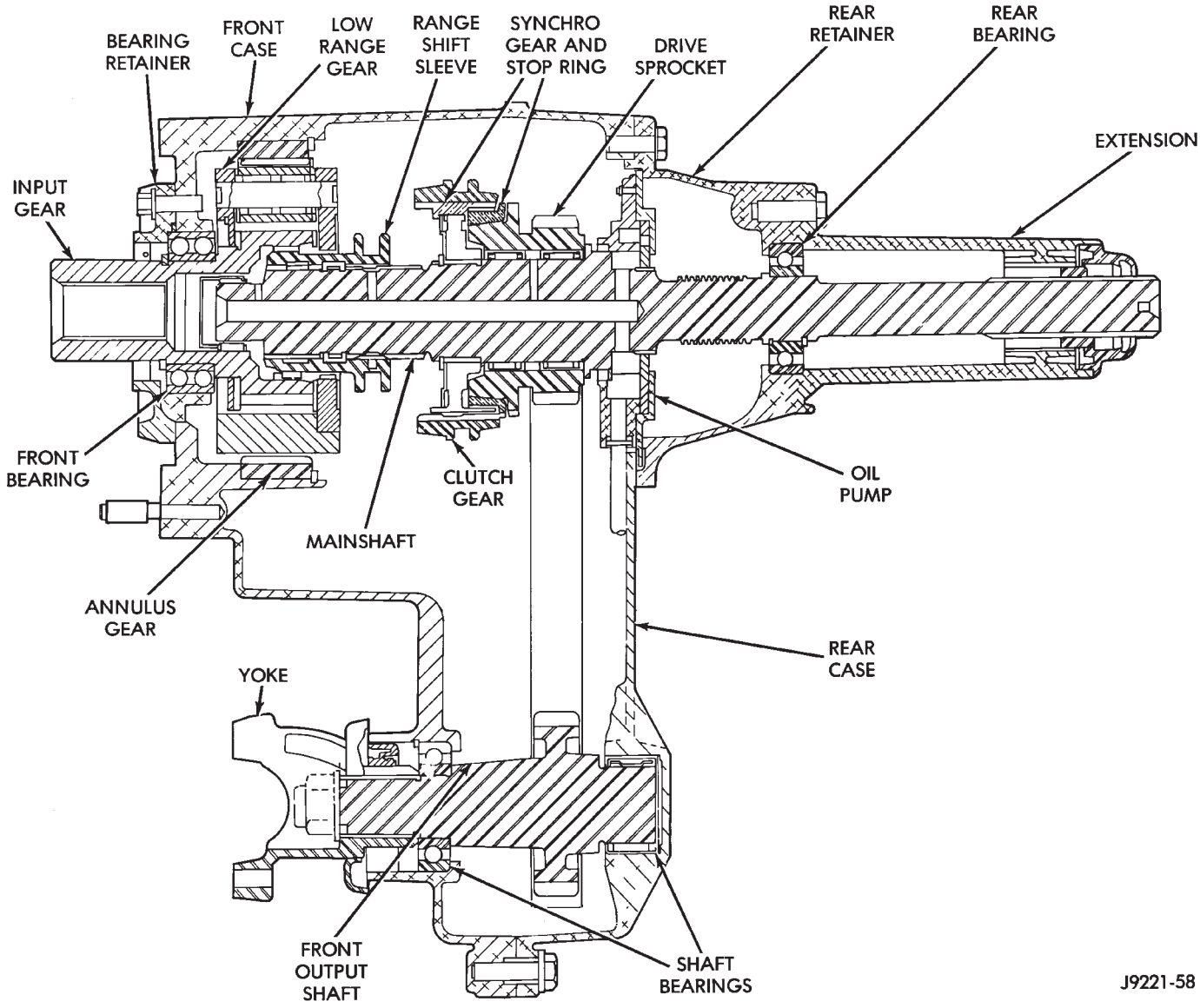

Fig. 1 NP231 Transfer Case

OPERATING RANGES

NP231 operating ranges are: 2-wheel drive high; 4-wheel drive high and 4-wheel drive low.

2-wheel drive range is for use on all road surfaces. The 4-wheel drive high and low ranges are undifferentiated and should only be used on unpaved, low traction surfaces only. The only exception being when hard surface roads are snow and ice covered.

SHIFT MECHANISM

Operating ranges are selected with a floor mounted shift lever. The shift lever is connected to the transfer case range lever by an adjustable linkage rod. A straight line shift pattern is used. Range positions are marked on the shifter bezel cover plate, or on the shift knob.

TRANSFER CASE IDENTIFICATION

A circular ID tag is attached to the rear case of each NP231 transfer case (Fig. 2). The ID tag provides the transfer case model number, assembly number, serial number and low range ratio.

The transfer case serial number also represents the date of build. For example, a serial number of 7-10-94 would represent July 10, 1994.

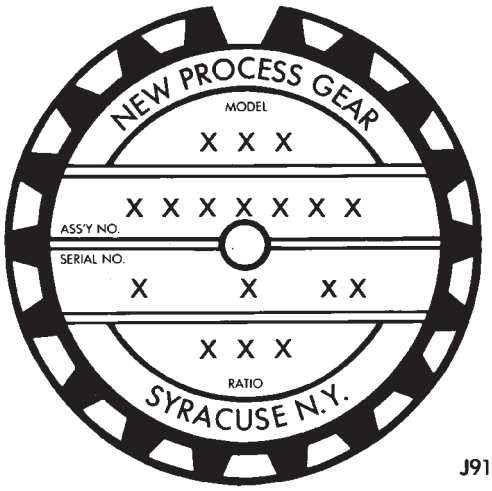

Fig. 2 Transfer Case Identification Tag

TRANSFER CASE LUBRICANT AND FILL LEVEL

Recommended lubricant for the NP231 transfer case is Mopar Dexron II.

Approximate lubricant refill capacity is 1.54 liters (3.25 pints) for YJ and 1.04 liters (2.2 pints) for XJ.

Correct fill level is to the bottom edge of the fill plug hole. Be sure the vehicle is level to ensure an accurate fluid level check.

NP231 SERVICE DIAGNOSIS

Condition	Possible Cause	Correction
TRANSFER CASE DIFFICULT TO SHIFT OR WILL NOT SHIFT INTO DESIRED RANGE	(1) Vehicle speed too great to permit shifting.	(1) Stop vehicle and shift into desired range. Or reduce speed to 3-4 km/h (2-3 mph) before attempting to shift.
	(2) If vehicle was operated for extended period in 4H mode on dry paved surface, driveline torque load may cause difficulty.	(2) Stop vehicle, shift transmission to Neutral, shift transfer case to 2H mode and operate vehicle in 2H on dry paved surfaces.
	(3) Transfer case external shift linkage binding.	(3) Lubricate, repair or replace linkage bushings or tighten loose components as necessary.
	(4) Insufficient or incorrect lubricant.	(4) Drain and refill to edge of fill hole with DEXRON II® or MOPAR-MERCON® Automatic Transmission Fluid.
	(5) Internal components binding, worn or damaged.	(5) Disassemble unit and replace worn or damaged components as necessary.
TRANSFER CASE NOISY IN ALL DRIVE MODES	(1) Insufficient or incorrect lubricant.	(1) Drain and refill to edge of fill hole with DEXRON II® or MOPAR-MERCON® Automatic Transmission Fluid. Check for leaks and repair if necessary. **Note: If unit is still noisy after drain and refill, disassembly and inspection may be required to locate source of noise.**
NOISY IN – OR JUMPS OUT OF – FOUR WHEEL DRIVE LOW RANGE	(1) Transfer case not completely engaged in 4L position.	(1) Stop vehicle, shift transfer case to Neutral, then shift back into 4L position.
	(2) Shift linkage out of adjustment.	(2) Adjust linkage.
	(3) Shift linkage loose or binding.	(3) Tighten, lubricate or repair linkage as necessary.
	(4) Range fork damaged, inserts worn, or fork is binding on shift rail.	(4) Disassemble unit and repair as necessary.
	(5) Low range gear worn or damaged.	(5) Disassemble and repair as necessary.
LUBRICANT LEAKING FROM OUTPUT SHAFT SEALS OR FROM VENT	(1) Transfer case overfilled.	(1) Drain to correct level.
	(2) Vent closed or restricted.	(2) Clear or replace vent if necessary.
	(3) Output shaft seals damaged or installed incorrectly.	(3) Replace seals. Be sure seal lip faces interior of case when installed. Also be sure yoke seal surfaces are not scored or nicked. Remove scores and nicks with fine sandpaper or replace yoke(s) if necessary.
ABNORMAL TIRE WEAR	(1) Extended operation on dry hard surface (paved) roads in 4H range.	(1) Operate in 2H on hard surface (paved) roads.

J9021-118

SHIFT LINKAGE ADJUSTMENT

(1) Shift transfer case into 4L position.
(2) Raise vehicle.
(3) Loosen lock bolt on adjusting trunnion (Figs. 3 and 4).
4) Be sure linkage rod slides freely in trunnion. Clean rod and apply spray lube if necessary.
(5) Verify that transfer case range lever is fully engaged in 4L position.
(6) Tighten adjusting trunnion lock bolt.
(7) Lower vehicle.

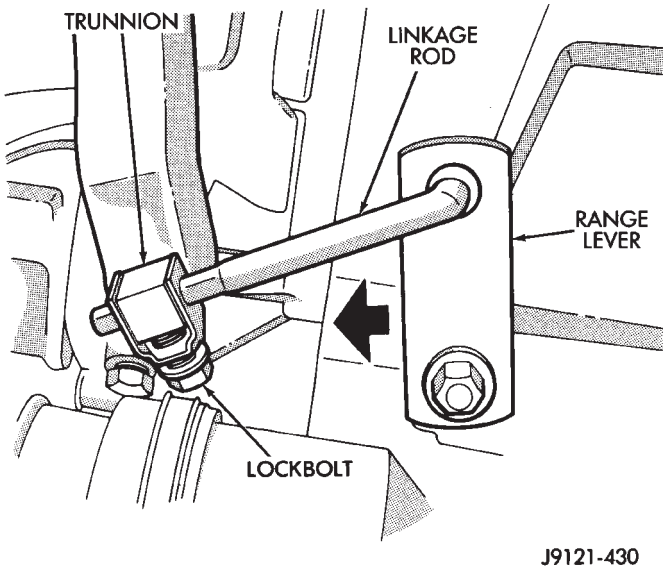

Fig. 3 Adjusting Trunnion And Lock Bolt (YJ)

SHIFT LEVER REMOVAL (XJ)

(1) Shift transfer case into 4L.
(2) Raise vehicle.
(3) Loosen adjusting trunnion locknut and slide shift rod out of trunnion (Fig. 4). If rod lacks enough travel to come out of trunnion, push trunnion out of torque shaft.
(4) Lower vehicle.
(5) Remove console. Refer to park brake section in Group 5 for procedures.
(6) Remove screws attaching lever assembly to floorpan and remove assembly and shift rod (if left attached).

SHIFT LEVER INSTALLATION (XJ)

(1) If shift rod was not removed from lever assembly, work rod down through floorpan opening. Then position lever assembly on floorpan and install assembly attaching screws.
(2) Install console.
(3) Raise vehicle.
(4) Connect trunnion to torque shaft arm. Or, slide shift rod into trunnion on range lever. Be sure shift rod slides freely in trunnion.
(5) Verify that range lever is in 4L position. Then tighten trunnion lock bolt.

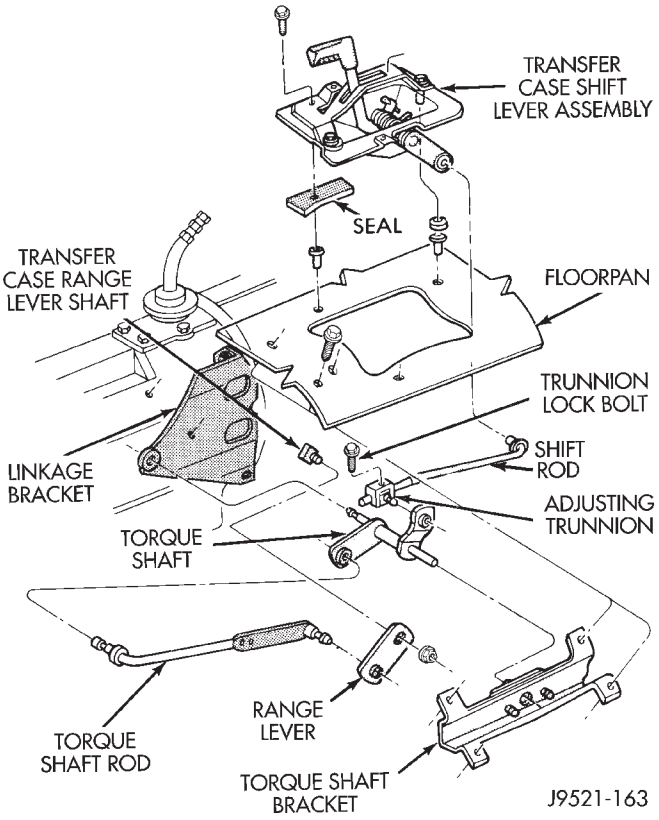

Fig. 4 Shift Linkage (XJ)

(6) Lower vehicle and check transfer case shift operation.

SHIFT LEVER REMOVAL (YJ)

(1) Shift transfer case into neutral.
(2) Remove shift lever knob and retaining nut. Then remove shift lever boot and bezel.
(3) Raise vehicle
(4) Loosen lock bolt in adjusting trunnion and slide shift rod out of trunnion (Fig. 3).
(5) Remove bolts/nuts attaching bracket and brace assembly to transmission (Fig. 5).
(6) Remove shift lever and bracket as assembly.
(7) YJ shift lever assembly is serviceable. If any assembly part must be replaced, remove pivot bolt, lever pin E-clip, and lever pin and spring. Then disassemble and replace necessary part (Fig. 6).

SHIFT LEVER INSTALLATION (YJ)

(1) Assemble lever components, if necessary. Lube pivot bolt and pin with Mopar multi-mileage grease before installation.
(2) Work shift lever upward into vehicle interior. Then position lever and bracket assembly on transmission and install attaching bolts/nuts.
(3) Place transfer case range lever in 4L position. Then slide shift rod into trunnion and tighten lock bolt.

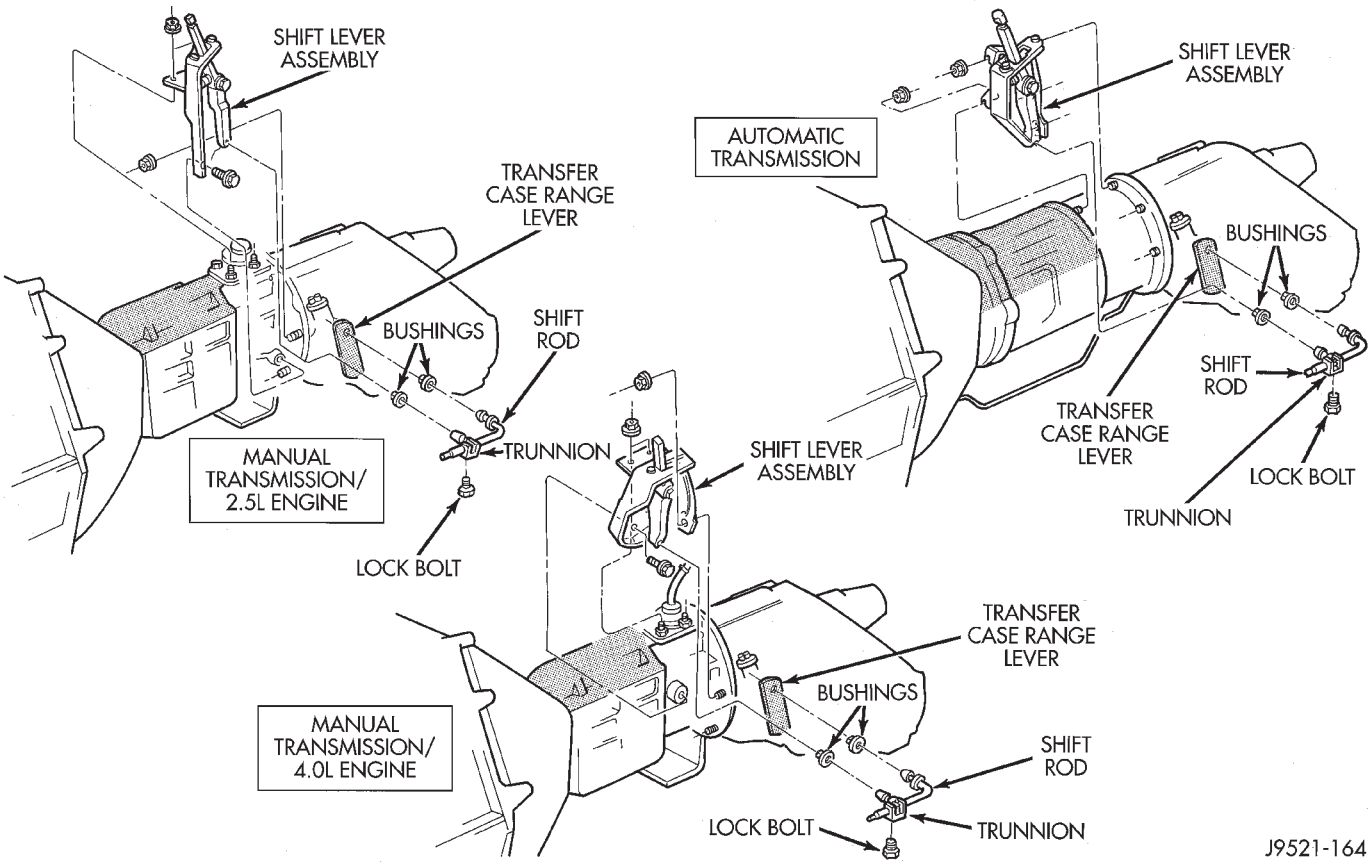

Fig. 5 Shift Linkage Mounting (YJ)

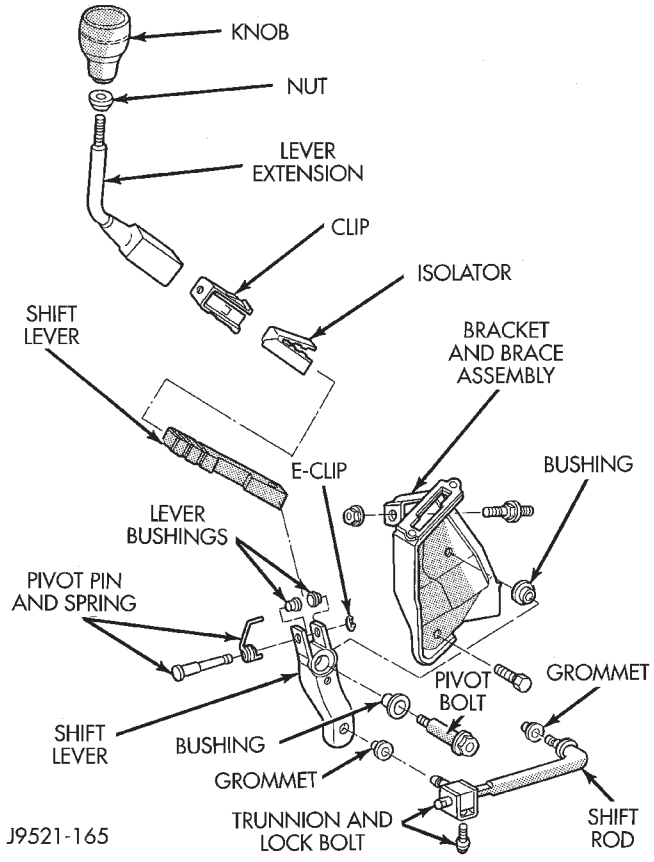

Fig. 6 Shift Linkage (YJ)

(4) Lower vehicle.

(5) Install shift lever bezel and boot (Fig. 7). Then install retaining nut and shift knob on lever.

SPEEDOMETER SERVICE

Speedometer service is covered in the 30RH/32RH, or AW-4 automatic transmission sections in this group. Refer to the appropriate section as needed.

TRANSFER CASE REMOVAL

(1) Shift transfer case into Neutral.

(2) Raise vehicle.

(3) Drain transfer case lubricant.

(4) Mark front and rear propeller shaft yokes for alignment reference.

(5) Support transmission with jack stand.

(6) Remove rear crossmember, or skid plate.

(7) Disconnect front/rear propeller shafts at transfer case.

(8) Disconnect vehicle speed sensor wires.

(9) Disconnect transfer case linkage rod from range lever.

(10) Disconnect transfer case vent hose, and indicator or vacuum switch harness.

(11) Support transfer case with transmission jack.

(12) Remove nuts attaching transfer case to transmission.

(13) Secure transfer case to jack with chains.

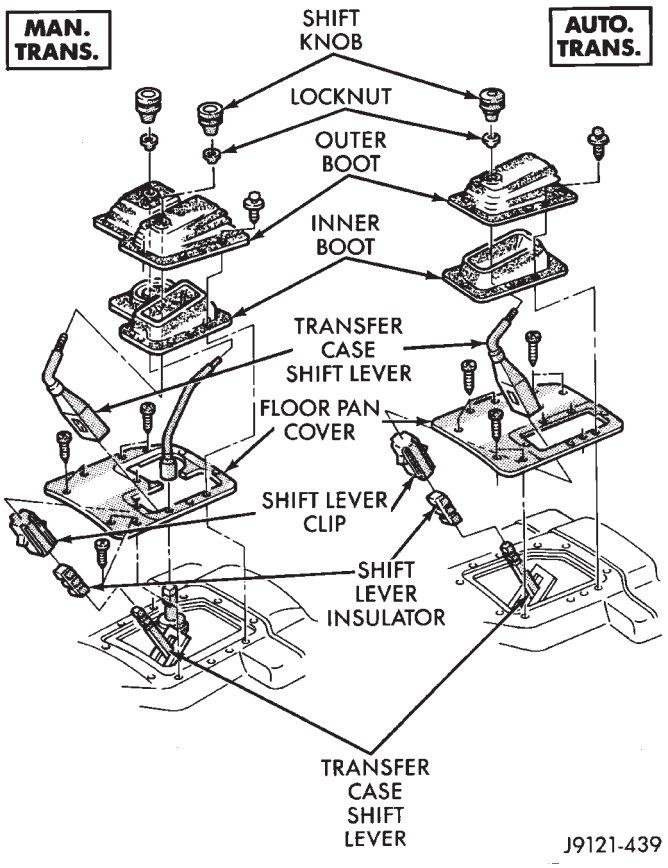

Fig. 7 Transfer Case Shift Lever And Boots (YJ)

(14) Pull transfer case and jack rearward to disengage transfer case.

(15) Remove transfer case from under vehicle.

(16) If transfer case was removed for overhaul, remove damper from rear retainer.

TRANSFER CASE INSTALLATION

(1) Mount transfer case on a transmission jack. Secure transfer case to jack with chains.

(2) Position transfer case under vehicle.

(3) Align transfer case and transmission shafts and install transfer case on transmission.

(4) Install and tighten transfer case attaching nuts to 35 N·m (26 ft. lbs.) torque.

(5) Install damper on rear retainer (Fig. 8). Tighten damper attaching nuts to 54 N·m (40 ft. lbs.) torque.

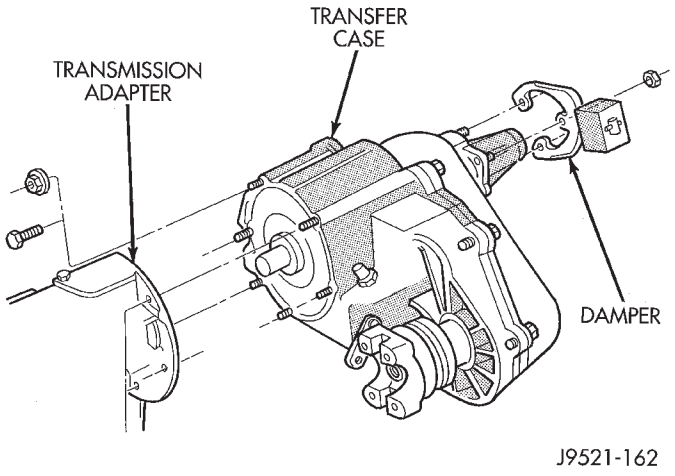

Fig. 8 Transfer Case Mounting

(6) Connect vehicle speed sensor wires, and vent hose.

(7) Connect indicator or vacuum switch harness to transfer case switch. Secure wire harnesses to clips on transfer case.

(8) Align and connect propeller shafts. Tighten shaft attaching bolts to 19 N·m (170 in. lbs.) torque.

(9) Fill transfer case with Mopar Dexron II fluid.

(10) Install rear crossmember, or skid plate. Tighten crossmember bolts to 41 N·m (30 ft. lbs.) torque.

(11) Remove transmission jack and support stand.

(12) Connect shift rod to transfer case range lever.

(13) Adjust transfer case shift linkage.

(14) Lower vehicle and verify transfer case shift operation.

TRANSFER CASE DISASSEMBLY AND OVERHAUL

Two versions of the NP231 are used in current models. One version retains the synchronizer components used in previous years. A newly introduced version does not have synchro components. The non-synchro version is not equipped with a synchro gear, struts, springs, or stop ring. During overhaul, note which version is being serviced and order needed parts accordingly.

(1) Remove fill and drain plugs. Also remove speedometer adapter and pinion if not previously removed.

(2) Remove front yoke. Discard yoke seal washer and nut. They should not be reused.

(3) Move transfer case range lever rearward to 4L position.

(4) Remove extension housing attaching bolts.

(5) Tap extension housing in clockwise direction to break sealer bead and remove housing (Fig. 1).

CAUTION: To avoid damaging the sealing surfaces of the extension housing and rear retainer, do not pry or wedge the housing off the retainer.

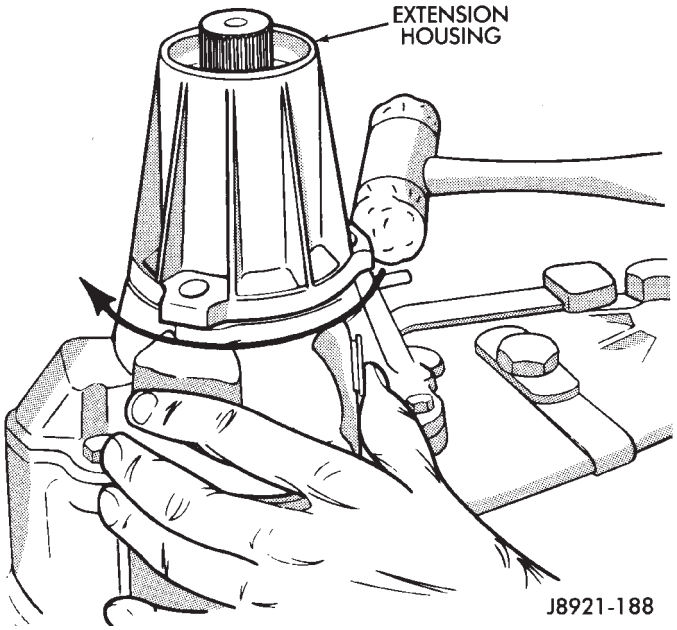

Fig. 1 Extension Housing Removal

(6) Remove rear bearing snap ring (Fig. 2).

(7) Remove rear retainer attaching bolts.

(8) Remove rear retainer. Position screwdriver under each tab on retainer housing (Fig. 3). Then carefully pry retainer upward and off rear case.

CAUTION: Do not pry against the sealing surfaces of the retainer or rear case. The surfaces could be damaged.

(9) Remove bolts attaching rear case to front case. Retain bolts and washers.

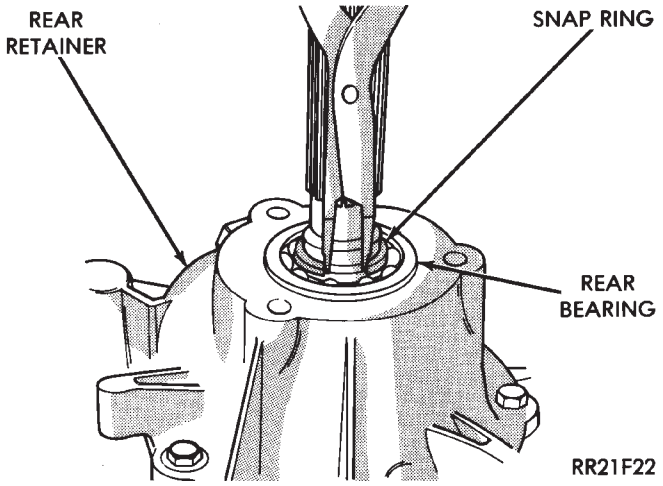

Fig. 2 Rear Bearing Snap Ring Removal

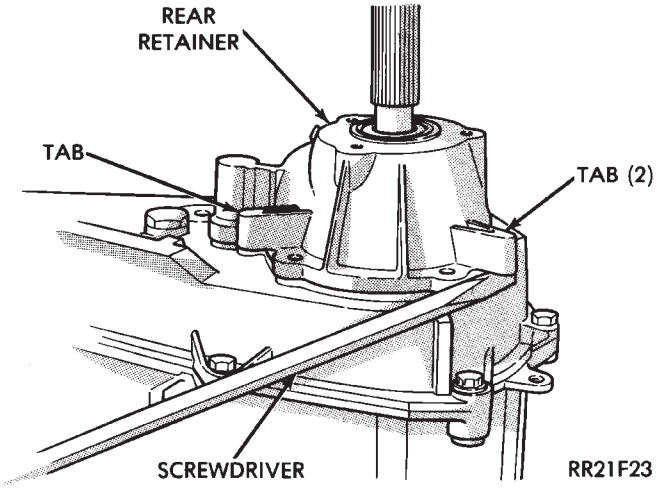

Fig. 3 Rear Retainer Removal

(10) Separate rear case from front case (Fig. 4) Insert screwdrivers into slots cast in case ends. Then gently pry upward to break sealer bead and loosen rear case.

CAUTION: Do not pry against the sealing surfaces of the retainer or rear case. The surfaces could be damaged.

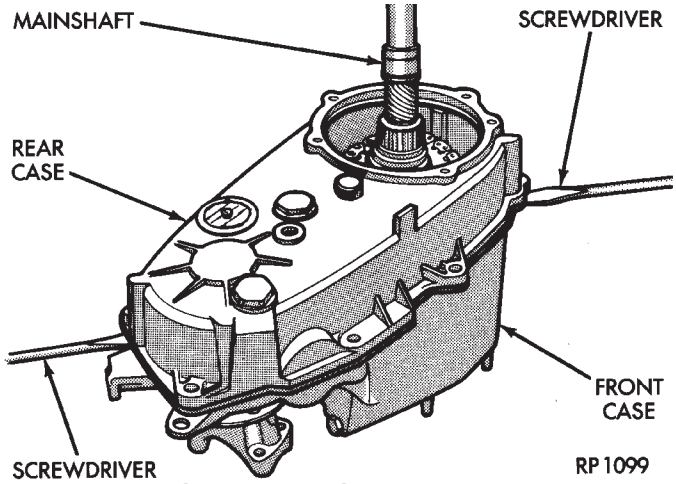

Fig. 4 Loosening Rear Case

(11) Remove oil pump and rear case as an assembly (Fig. 5).

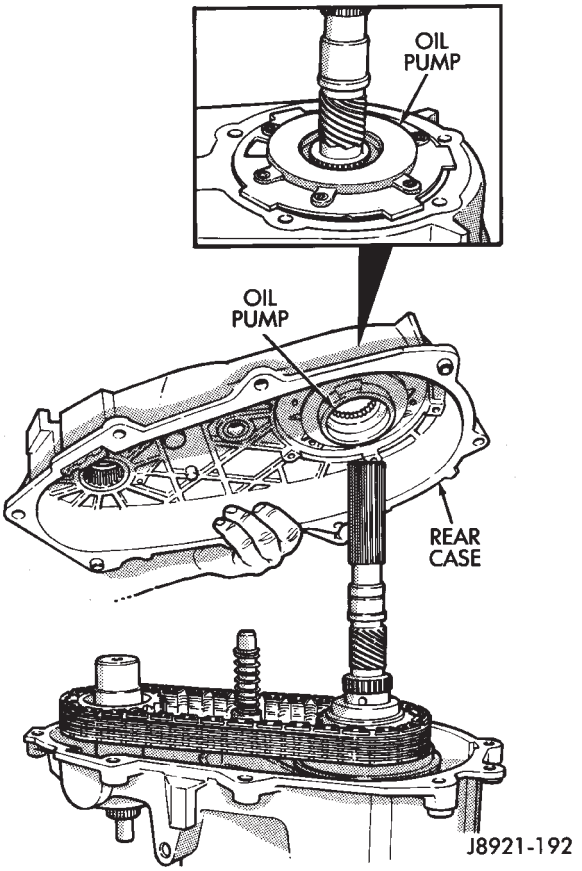

Fig. 5 Rear Case And Oil Pump Removal

(12) Slide oil pickup tube screen out of case pocket.

(13) Remove oil pump and pickup tube as assembly (Fig. 6).

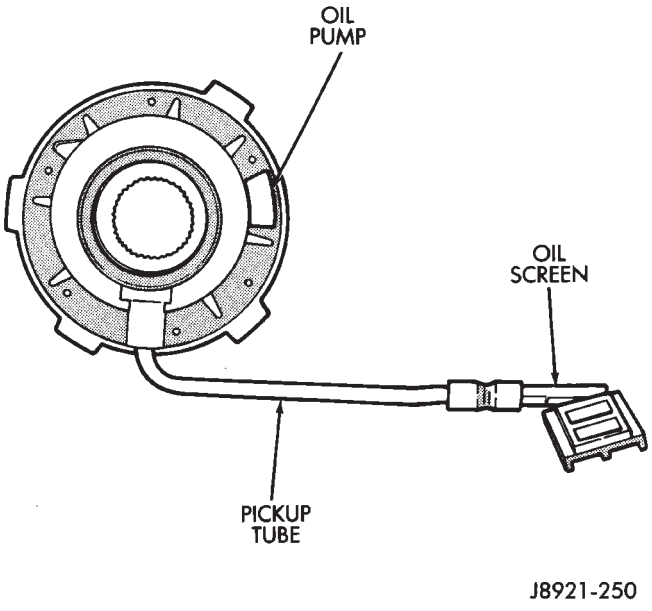

Fig. 6 Oil Pump And Pickup Tube Removal

(14) Disconnect screen from pickup tube and remove screen (Fig. 7).

(15) Remove pickup tube from oil pump (Fig. 7).

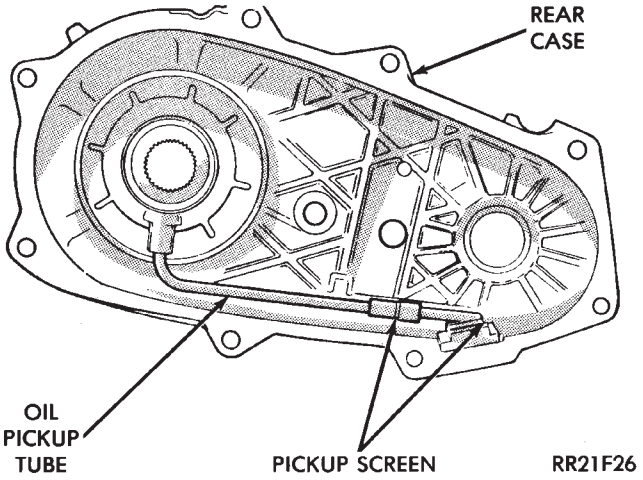

Fig. 7 Removing Oil Screen And Pickup Tube

(16) Remove pickup tube O-ring from oil pump (Fig. 8).

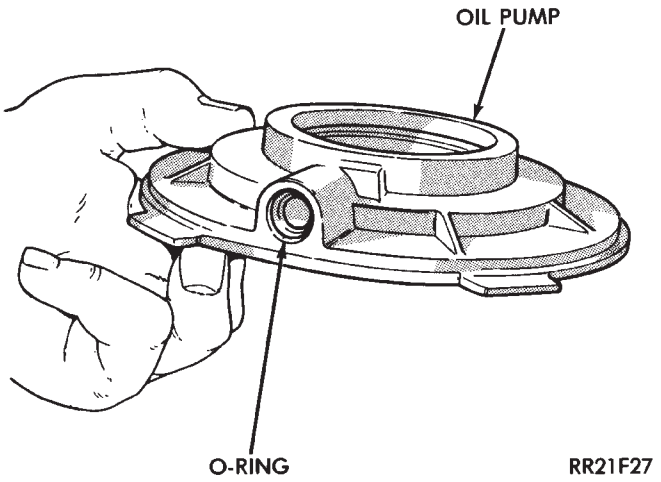

Fig. 8 Pickup Tube O-Ring Location

(17) Remove mode spring (Fig. 9).

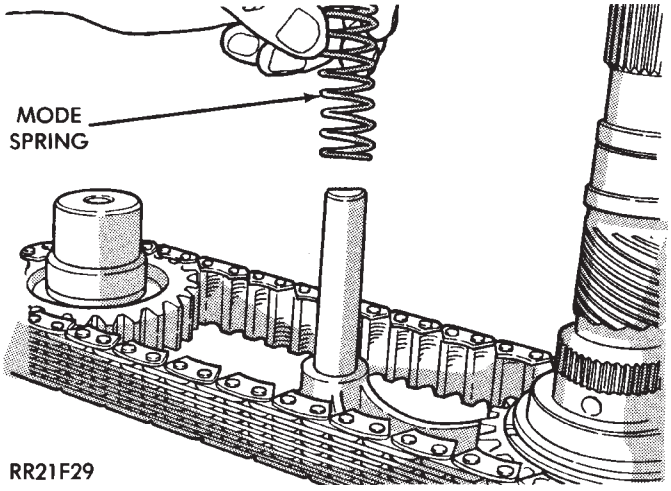

Fig. 9 Mode Spring Removal

(18) Tap front output shaft upward with rawhide mallet to free it from shaft bearing.

(19) Remove front output shaft and drive chain (Fig. 10).

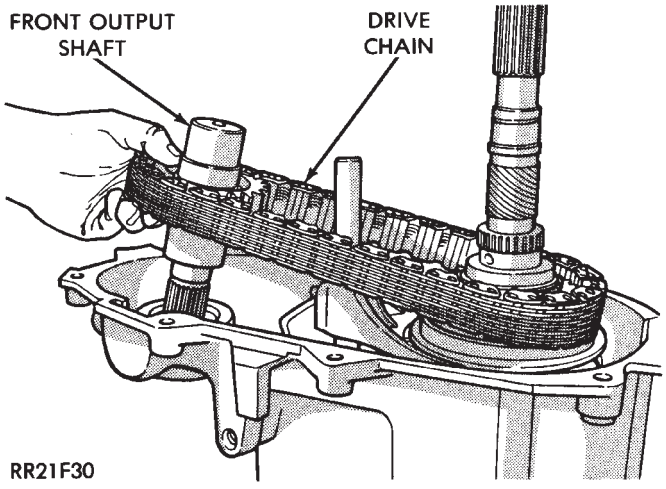

Fig. 10 Front Output Shaft And Drive Chain Removal

(20) Remove mainshaft, mode fork and shift rail as assembly d (Fig. 11).

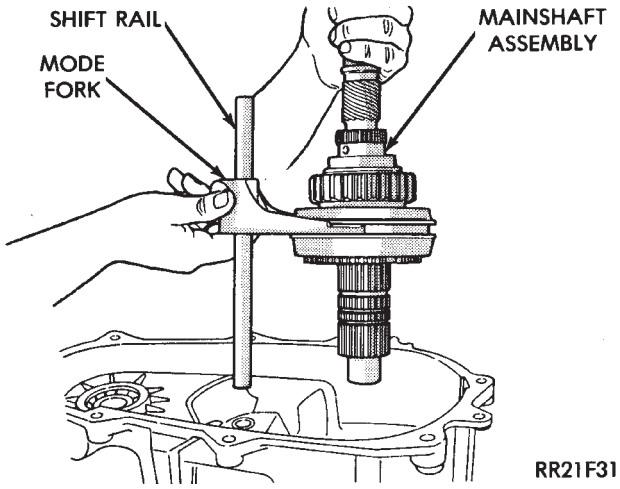

Fig. 11 Removing Mainshaft, Mode Fork And Shift Rail

(21) Remove mode fork and shift rail from synchro sleeve (Fig. 12).

(22) Remove hub snap ring and remove spacer if equipped (Fig. 13).

(23) Remove sleeve from hub (Fig. 14).

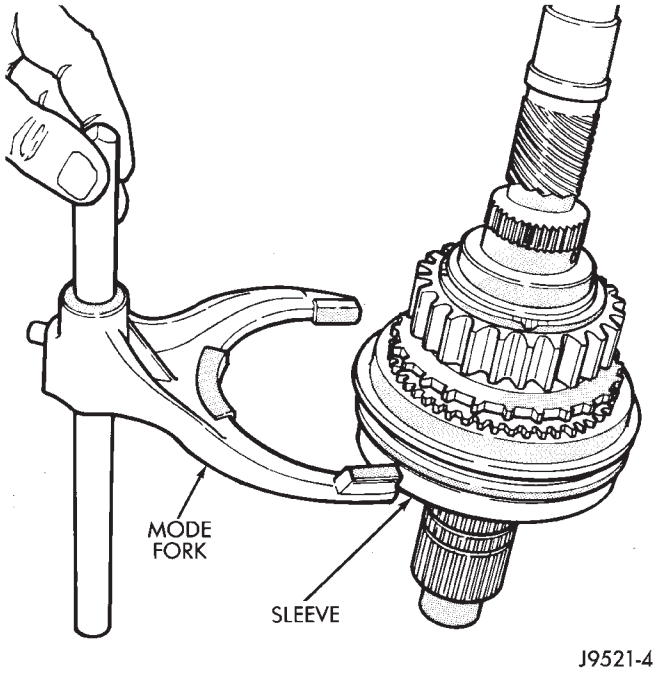

Fig. 12 Removing Mode Fork And Rail From Sleeve

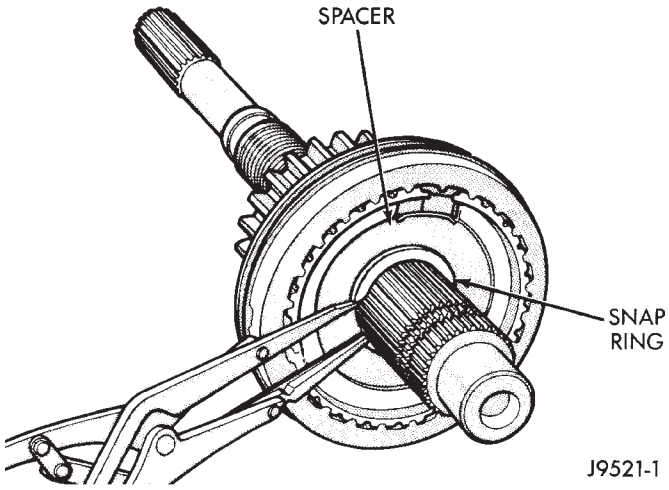

Fig. 13 Hub Snap Ring And Spacer Removal

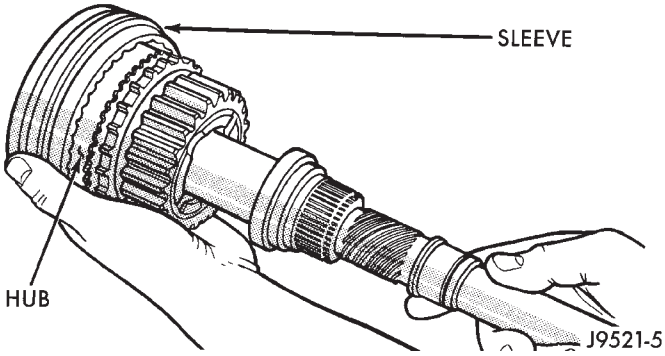

Fig. 14 Removing Sleeve From Hub

(24) Remove hub from mainshaft. On synchro models, also remove synchro stop ring (Fig. 15).

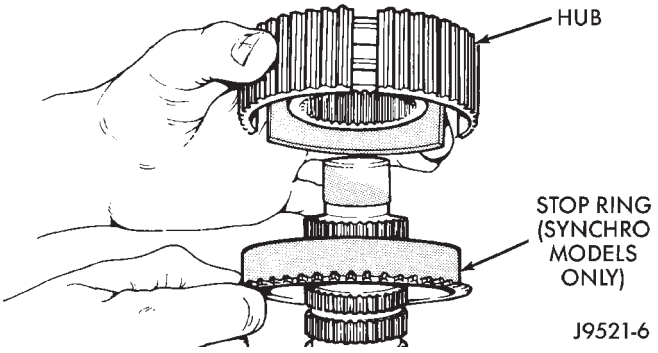

Fig. 15 Hub And Stop Ring Removal

(25) Remove drive sprocket (Fig. 16).

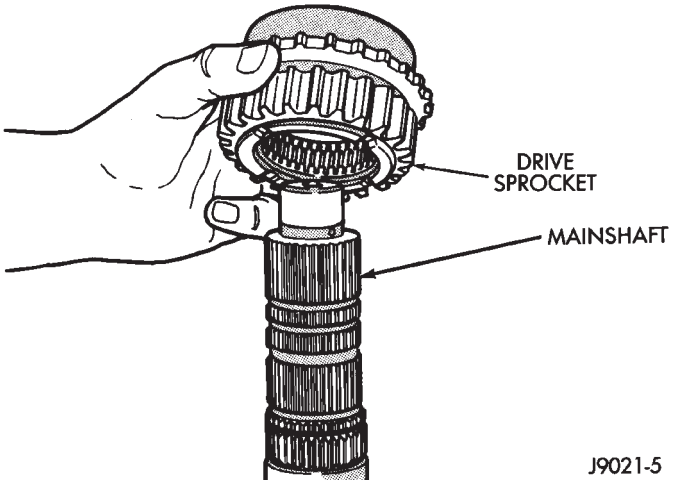

Fig. 16 Drive Sprocket Removal/Installation

(26) Slide range fork pin out of shift sector (Fig. 17).

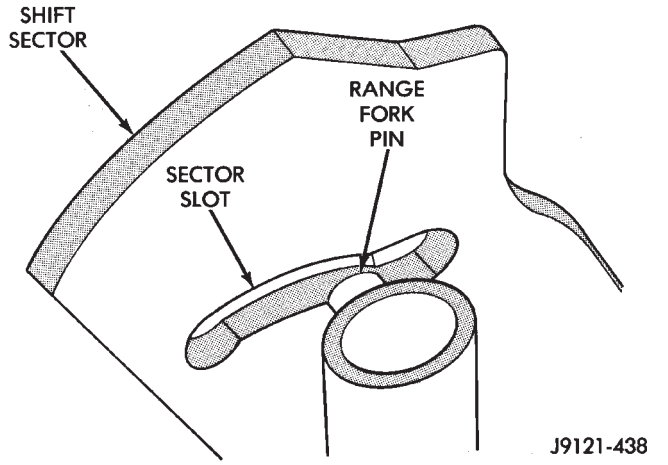

Fig. 17 Disengaging Range Fork

(27) Remove range fork and shift hub (Fig. 18).
(28) Remove range lever from sector shaft.
(29) Remove shift sector (Fig. 19).

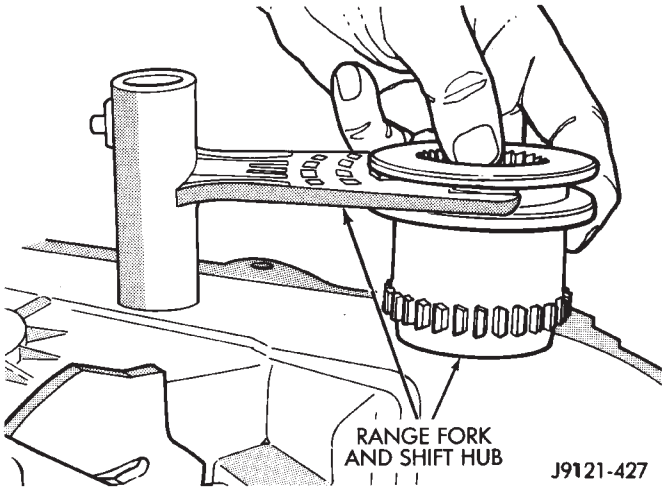

Fig. 18 Range Fork And Hub Removal/Installation

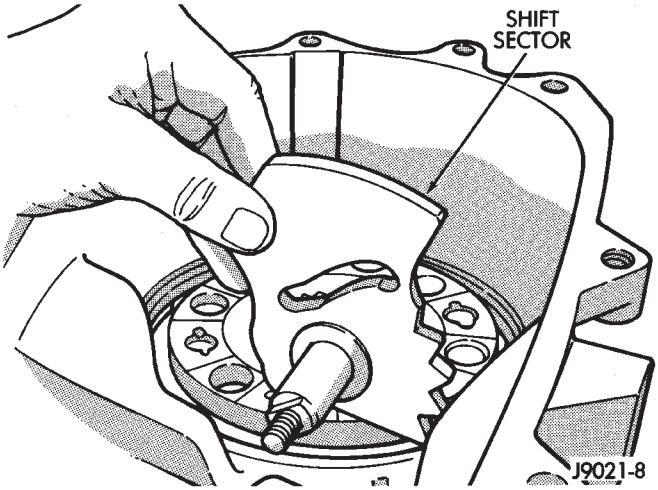

Fig. 19 Shift Sector Removal/Installation

(30) Remove sector shaft bushing and O-ring (Fig. 20).

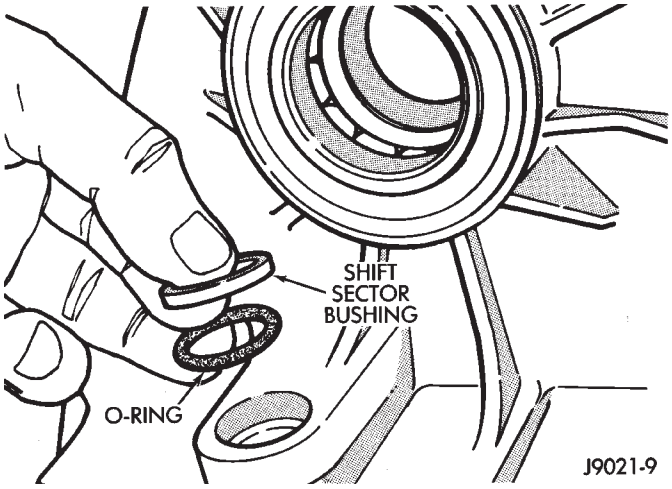

Fig. 20 Removing/Installing Sector Shaft Bushing And O-Ring

(31) Remove shift detent plunger, spring and plug (Fig. 21). Remove O-ring from plug after removal.

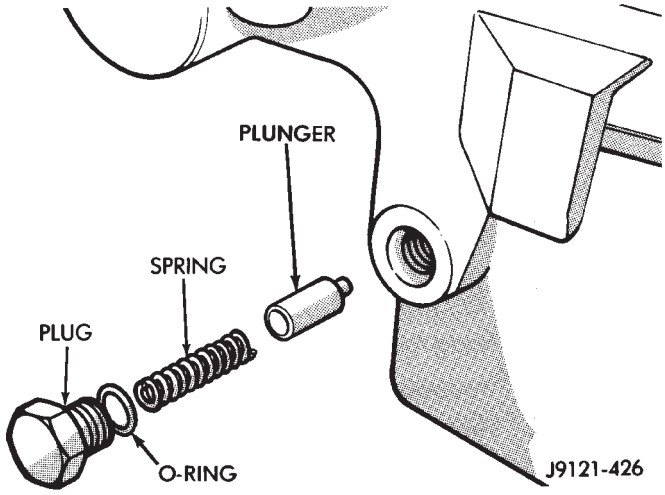

Fig. 21 Detent Component Removal

(32) Turn front case over and remove front bearing retainer bolts (Fig. 22).

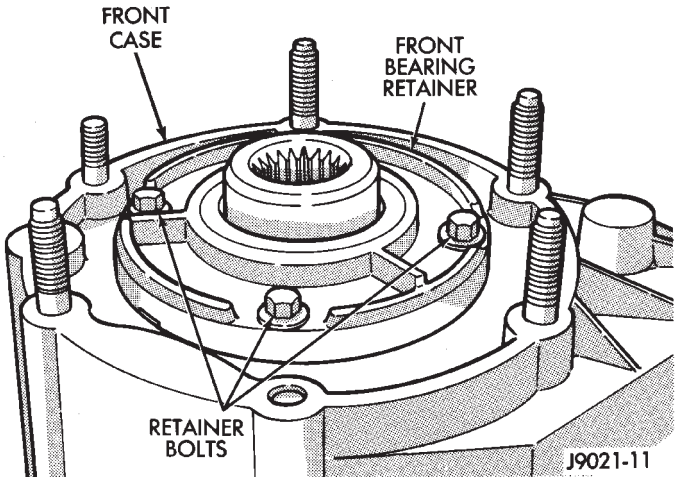

Fig. 22 Front Bearing Retainer Bolt Locations

(33) Remove front bearing retainer. Position screwdrivers in retainer slots and lift upward to loosen and remove retainer (Fig. 23).

(34) Remove input gear snap ring (Fig. 24).

(35) Press input and low range gear assembly out of input gear bearing with shop press (Fig. 25).

(36) Remove low range gear snap ring (Fig. 26).

(37) Remove retainer, thrust washers and input gear from low range gear (Fig. 27).

(38) Remove oil seals from rear retainer, rear extension housing, oil pump feed housing and case halves.

(39) Remove magnet from pocket in front case.

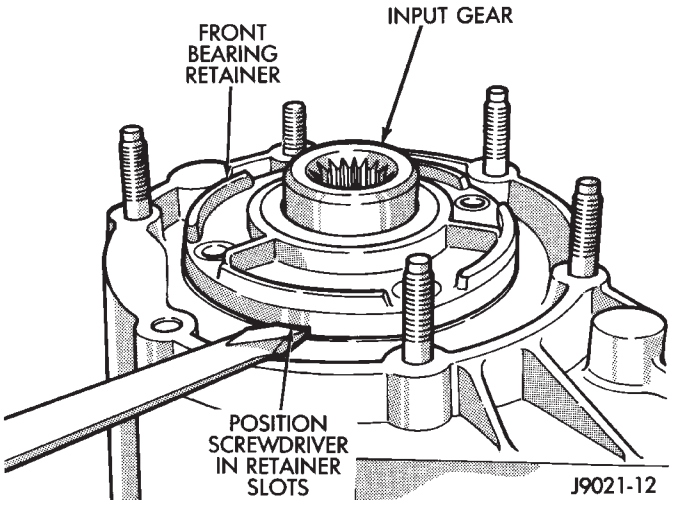

Fig. 23 Removing Front Bearing Retainer

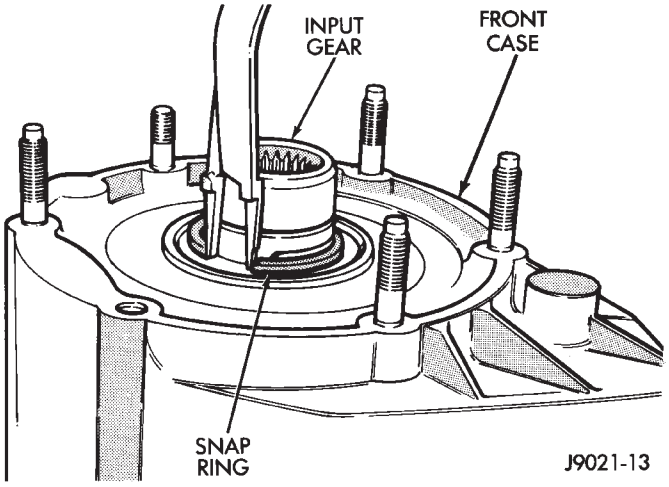

Fig. 24 Removing Input Gear Snap Ring

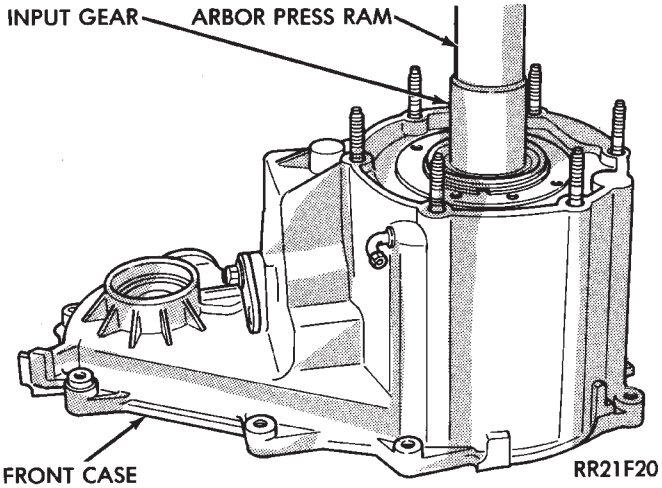

Fig. 25 Removing Input And Low Range Gear Assembly

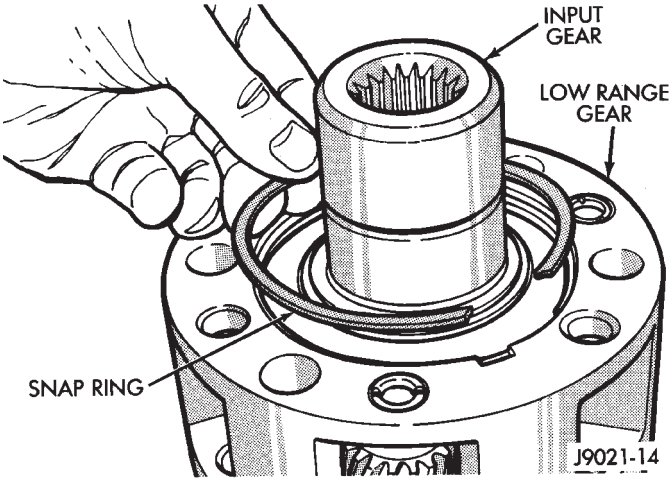

Fig. 26 Removing Low Range Gear Snap Ring

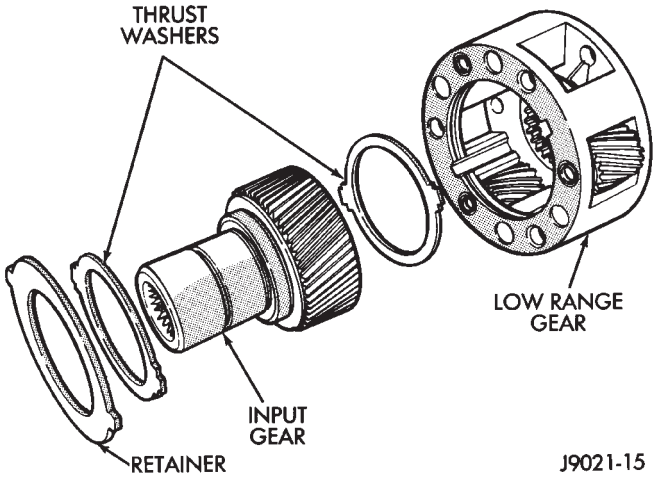

Fig. 27 Input And Low Range Gear Components

OVERHAUL CLEANING AND INSPECTION

Clean the transfer case components thoroughly with solvent. Remove all traces of sealer from the case and retainer seal surfaces.

Clean the oil pickup screen with solvent. Shake excess solvent from screen and allow it air dry. Use compressed air to remove solvent residue from all oil feed passages and channels in the case halves.

Inspect the splines and bearing surfaces on the both shafts. Replace either shaft as necessary if wear, or damage is evident.

Check condition of the shift forks, fork pads and shift rail. Minor scratches/nicks on the rail can be smoothed with 320/400 grit emery cloth. Replace the mode fork pads if worn. Replace the range fork if the pads are worn, missing, or damaged.

On synchro equipped models, inspect the synchro sleeve, hub, struts, springs, and the stop ring. Replace worn, or damaged parts as necessary.

Do not attempt to salvage and reuse snap rings that were bent, or distorted. It is recommended that all snap rings be replaced during overhaul.

Replace the front yoke nut as it should not be reused. Also replace the rubber seal if worn, cut, or torn.

Inspect the low range annulus gear (Fig. 28). **If the gear is damaged, replace the gear and front case as an assembly. Do not attempt to remove the gear.**

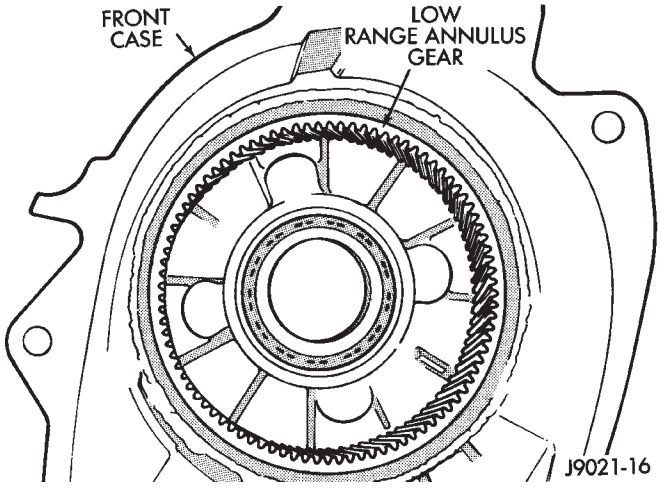

Fig. 28 Low Range Annulus Gear Location

Inspect the case halves, extension housing and retainers for cracks, porosity, or damaged sealing surfaces.

Inspect the drive sprockets and drive chain carefully. Replace the sprockets if worn, chipped, or cracked. Also replace the chain if distorted, binds at any point, or is stretched.

Replace the oil pump if any pump part is worn or damaged. Do not disassemble the pump as parts are not available separately. The pump is only available as an assembly.

Inspect all of the transfer case bearings for wear, roughness, pitting, or galling. Replace worn or damaged bearings as outlined in the transfer case assembly procedures.

Clean the sealing (mating) surfaces of the case halves, retainer and extension with a scraper, a wire brush and 3M All Purpose cleaning solvent. These surfaces must be clean in order for the sealer to adhere properly.

TRANSFER CASE ASSEMBLY

CAUTION: The bearing bores in various transfer case components contain oil feed holes. Be sure replacement bearings do not block these feed holes. In addition, the drive sprocket, synchro hub and sleeve are different for non-synchro and synchro models. Do not interchange these parts. Do not install synchro struts or a stop ring in a non-synchro model; this will cause the drive sprocket to bind on the shaft and hub.

FRONT CASE ASSEMBLY

(1) Lubricate components with automatic transmission fluid (or petroleum jelly where indicated) during assembly.

(2) Remove front output shaft seal from front case with crowfoot style pry tool (Fig. 29).

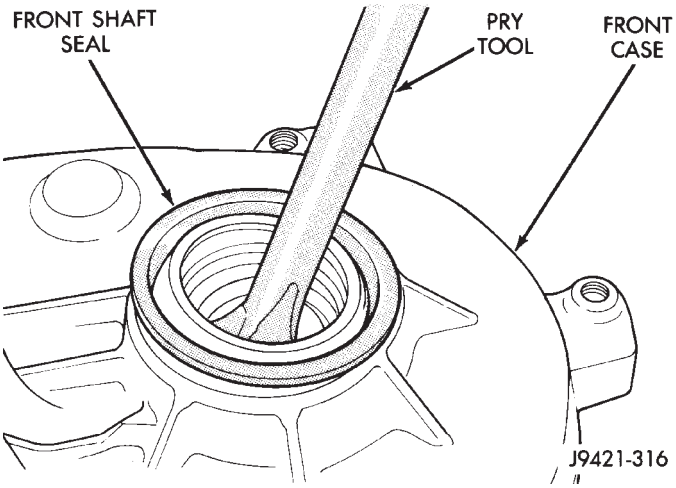

Fig. 29 Front Output Shaft Oil Seal Removal

(3) Remove snap ring retaining front output shaft front bearing in case (Fig. 30).

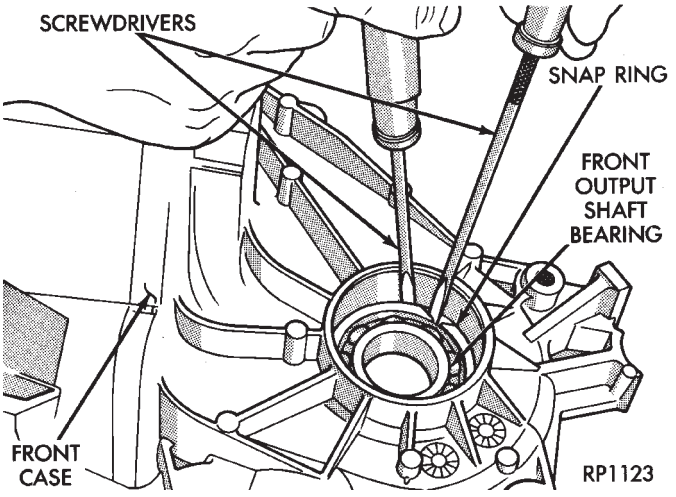

Fig. 30 Removing/Installing Front Output Shaft Bearing Snap Ring

(4) Tap old front output shaft bearing out of front case with plastic mallet. Install new bearing with Tool Handle C-4171 and Installer Tool 5064 (Fig. 31).

(5) Secure front output shaft bearing in front case with new snap ring (Fig. 30).

(6) Install new front output shaft seal in front case with suitable size socket or installer tool.

(7) If front output shaft rear bearing is to be replaced, install new bearing as follows:

(a) Remove bearing from rear case with Bearing Remover MD-998346 and two suitable size wrenches (Fig. 32).

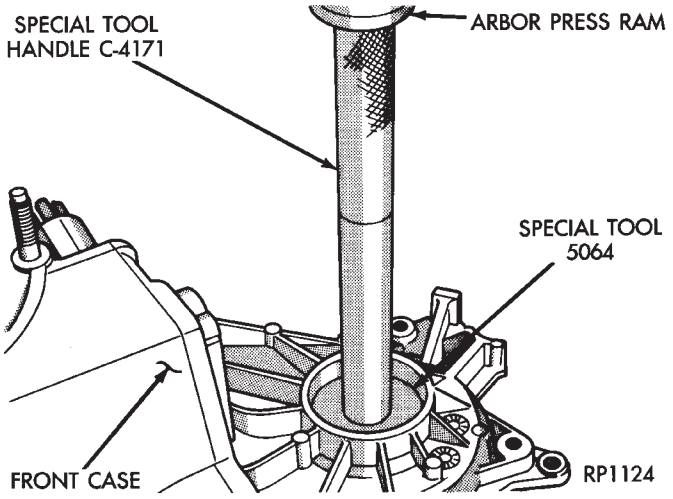

Fig. 31 Installing Front Output Shaft Front Bearing In Case

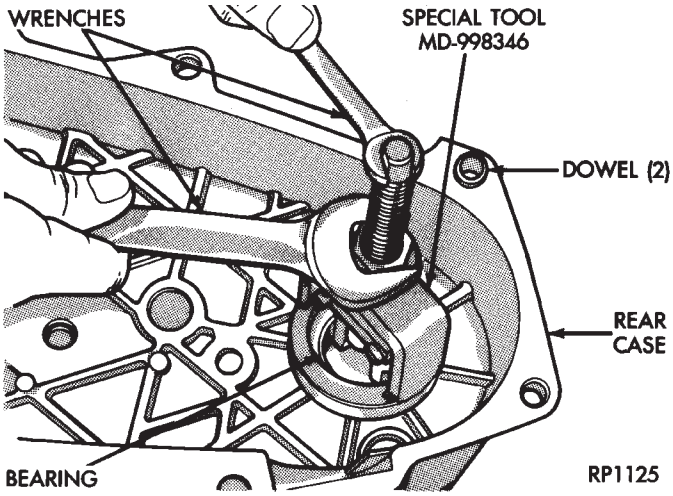

Fig. 32 Front Output Shaft Rear Bearing Removal

(b) Seat new bearing in rear case with Tool Handle C-4171 and Bearing Installer 5063 (Fig. 33).

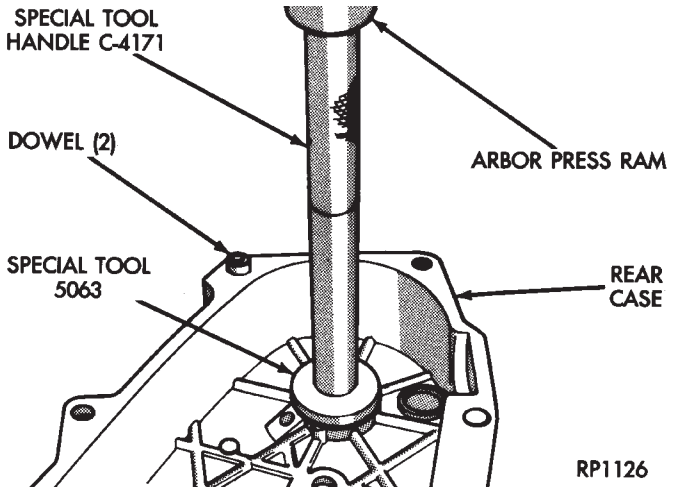

Fig. 33 Front Output Shaft Rear Bearing Installation

(8) Remove input gear bearing from front case with Tool Handle C-4171 and Tool C-4210, 7828, or 5062. Use tool that is best fit in bearing (Fig. 34).

(9) Turn front case over.

(10) Start bearing in case by hand. Then seat bearing with Tools C-4171 and C-4210, or 7828 until snap ring seats against case surface (Fig. 35).

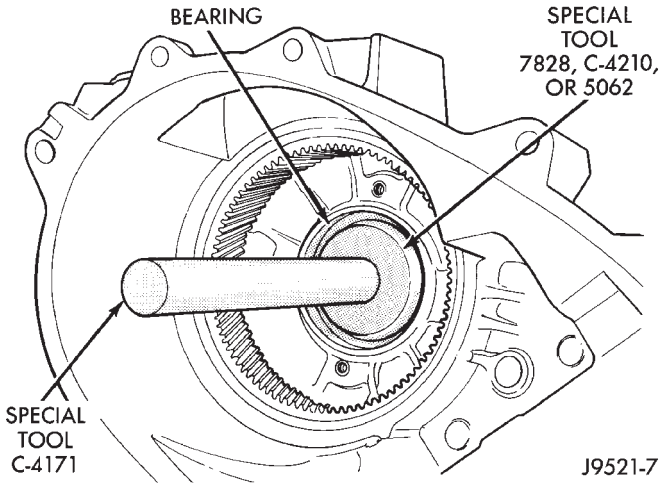

Fig. 34 Input Gear Bearing Removal

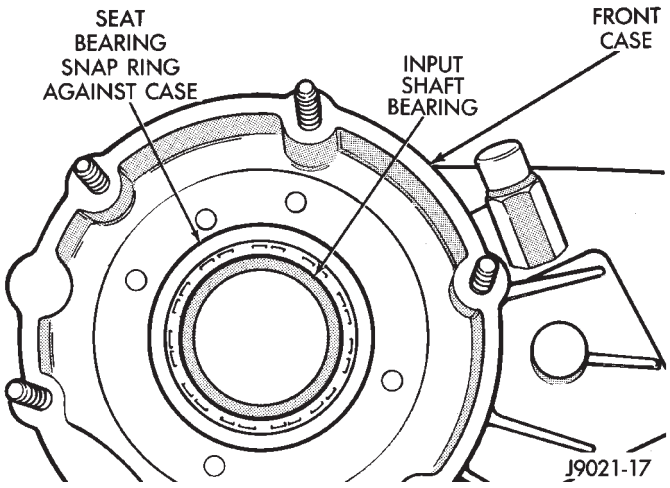

Fig. 35 Input Gear Bearing Installation

INPUT AND LOW RANGE GEAR ASSEMBLY AND INSTALLATION

(1) Remove mainshaft pilot bearing from input gear with Tool MD-998346, or similar tool as follows:

(a) Turn puller tool bolt until jaws retract enough to fit into bearing (Fig. 36).

(b) Insert puller bolt and jaws into bearing. Then turn puller bolt clockwise so ramp on bolt spreads jaws forcing them under bearing (Fig. 37).

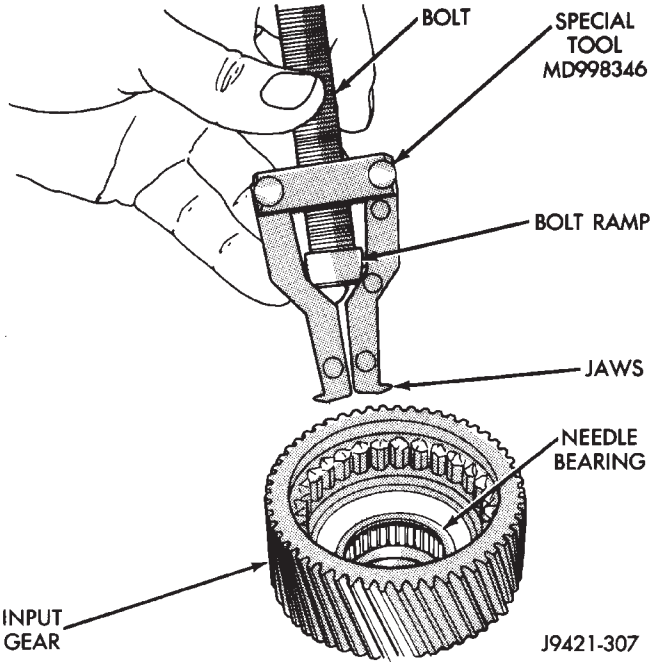

Fig. 36 Puller Jaws In Retracted Position

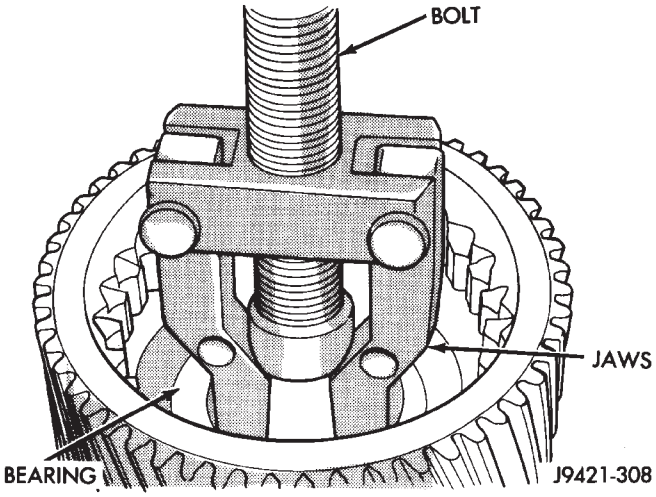

Fig. 37 Puller Bolt And Jaws Seated Under Needle Bearing

(c) Install puller bridge over puller bolt (Fig. 38). Then install flat washer and nut on bolt.

(d) Hold puller bridge from turning by hand or with locking pliers. Then tighten nut on puller bolt in clockwise direction to draw bearing out of input gear (Fig. 39).

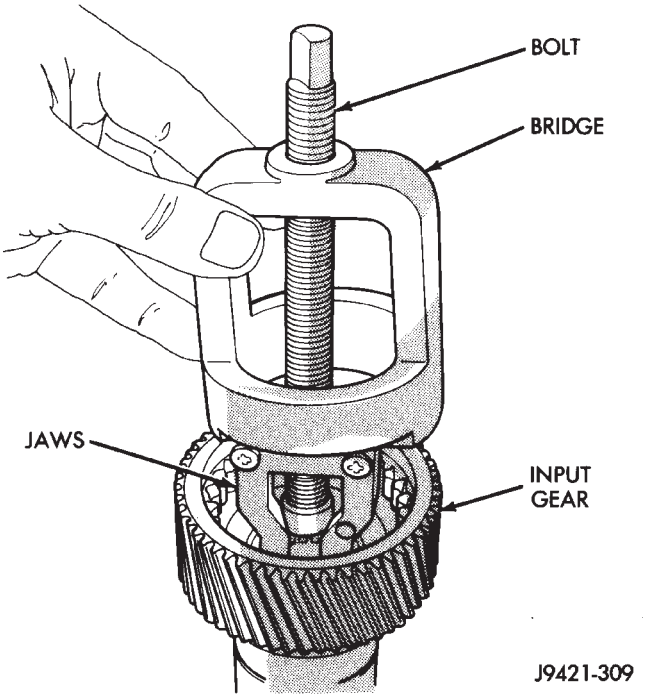

Fig. 38 Installing Puller Bridge

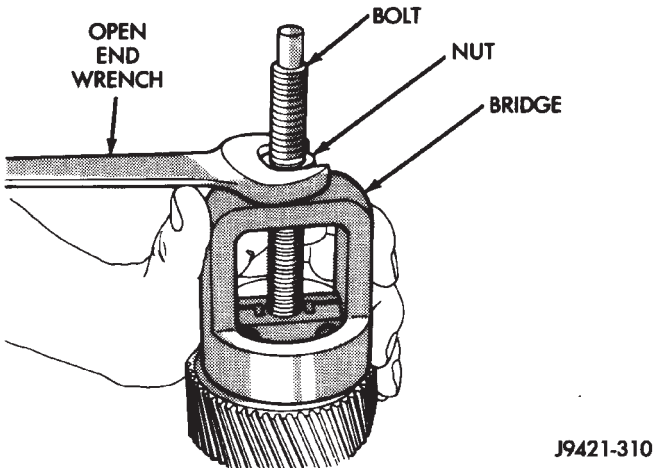

Fig. 39 Removing Mainshaft Pilot Bearing From Input Gear

(2) Install new needle bearing in input gear with Tool Handle C-4171 and Installer 5065 (Fig. 40).

(3) Lubricate and install thrust washers, input gear and retainer in low range gear (Fig. 41). Then install retainer snap ring. **Be sure snap ring is fully seated before proceeding.**

(4) Align and install input/low range gear assembly in case. Use hammer handle to tap low range gear into annulus and input gear into bearing if necessary.

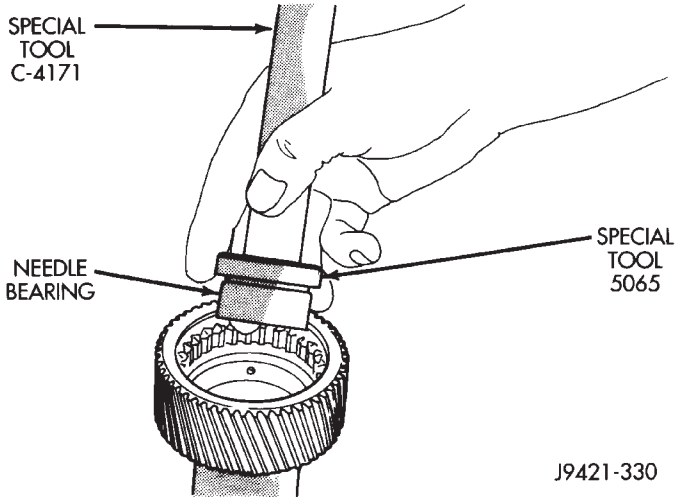

Fig. 40 Installing Mainshaft Pilot Bearing In Input Gear

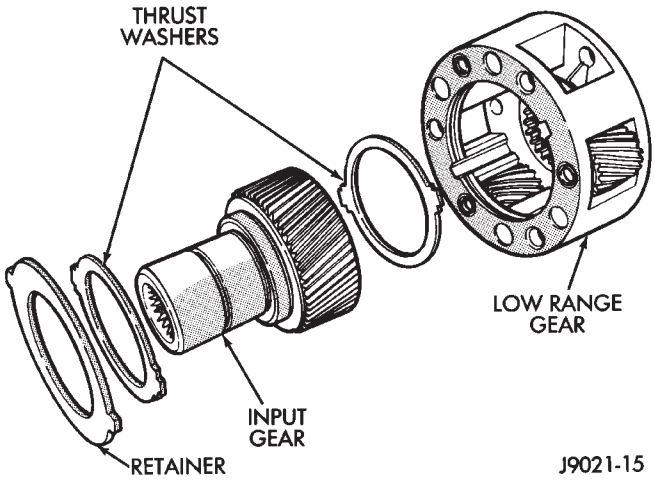

Fig. 41 Input And Low Range Gear Components

(5) Install input gear snap ring (Fig. 42).

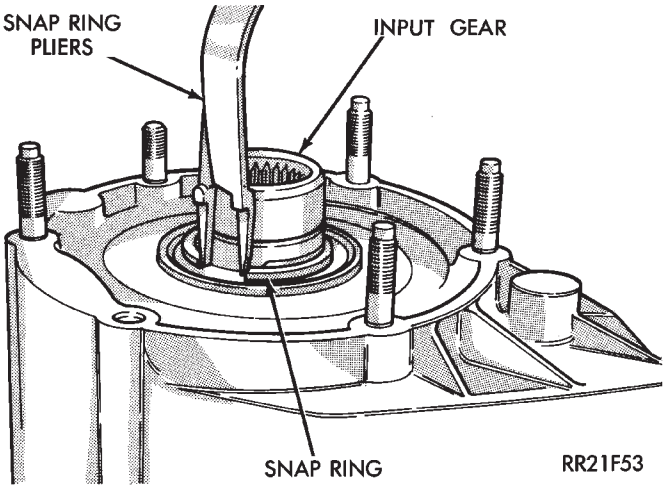

Fig. 42 Installing Input Gear Snap Ring

(6) Install new oil seal in input bearing retainer with suitable size installer tool (Fig. 43).

(7) Apply 3 mm (1/8 in.) wide bead of Mopar Gas-

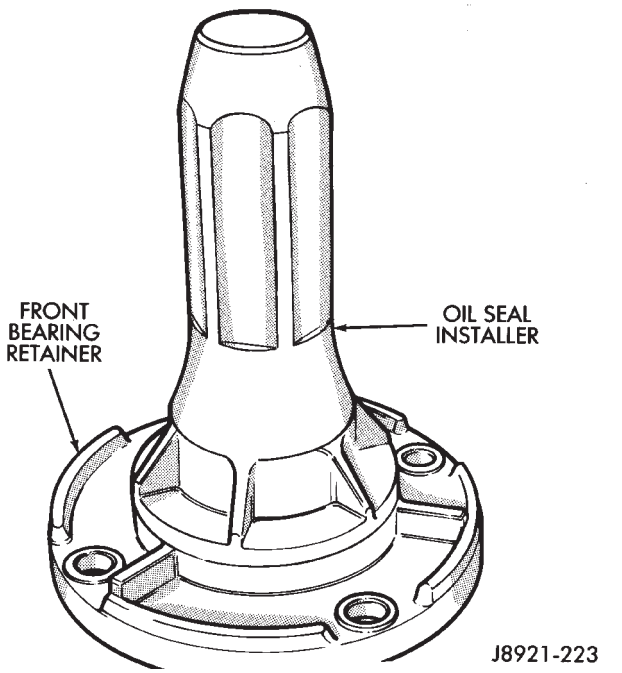

Fig. 43 Installing Input Bearing Retainer Oil Seal

ket Maker, silicone adhesive/sealer, or Loctite 518 to front bearing retainer seal surface (Fig. 44).

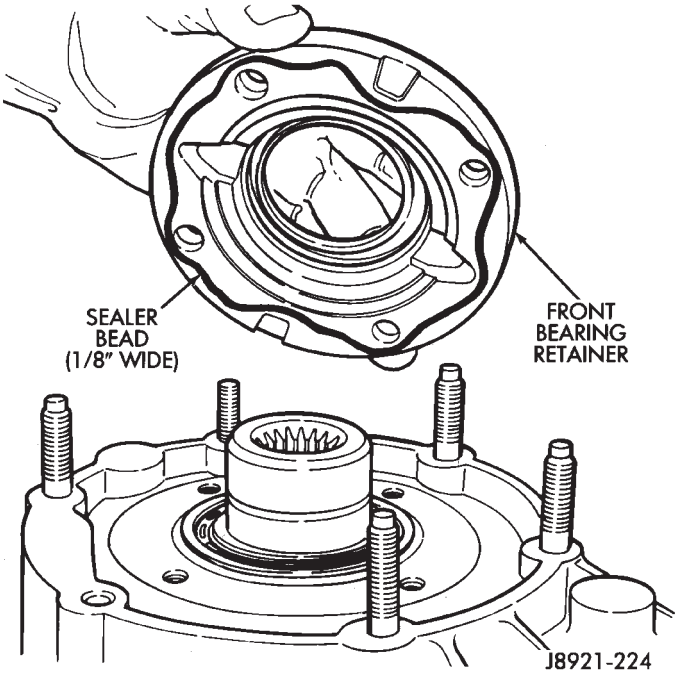

Fig. 44 Applying Sealer Bead To Bearing Retainer

(8) Align oil channel in retainer with oil feed hole in case (Fig. 45).

(9) Install input (front) bearing retainer on front case (Fig. 46). Tighten retainer bolts to 21 N·m (16 ft. lbs.) torque.

SHIFT SECTOR, RANGE FORK AND SLEEVE INSTALLATION

(1) Install new sector shaft O-ring and retainer bushing (Fig. 47).

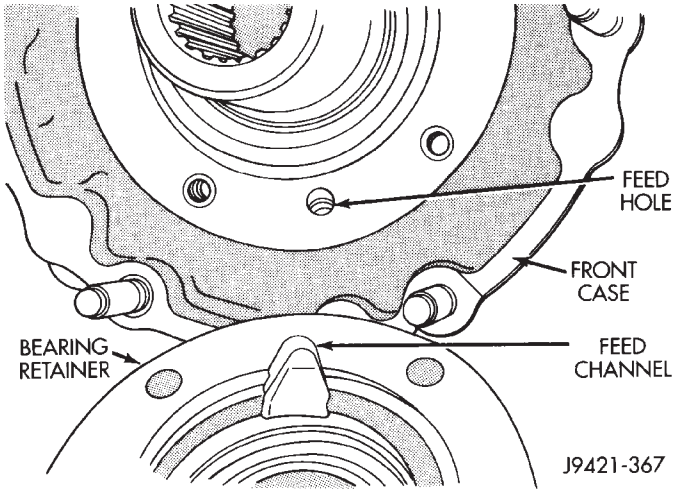

Fig. 45 Aligning Retainer Oil Channel With Feed Hole In Case

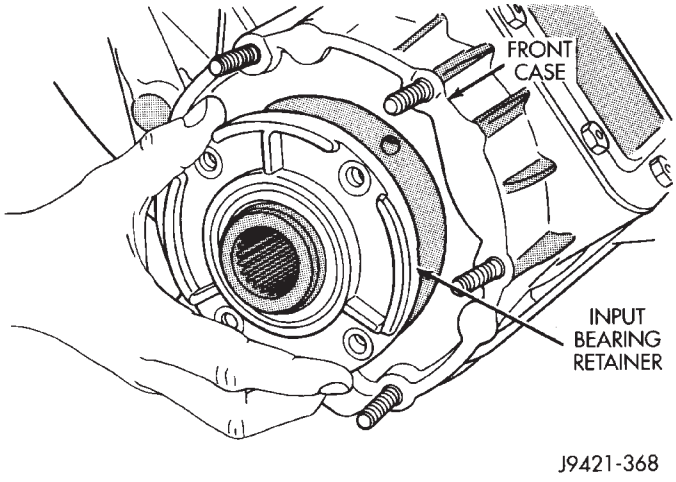

Fig. 46 Bearing Retainer Installation

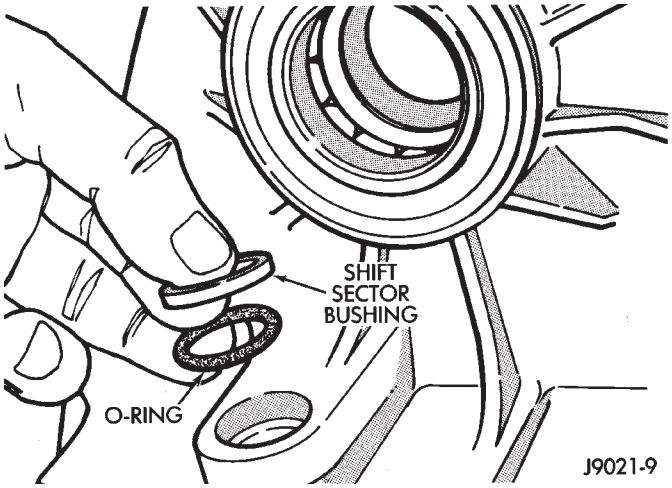

Fig. 47 Installing Sector O-Ring And Retainer Bushing

(2) Install shift sector in the case (Fig. 48).

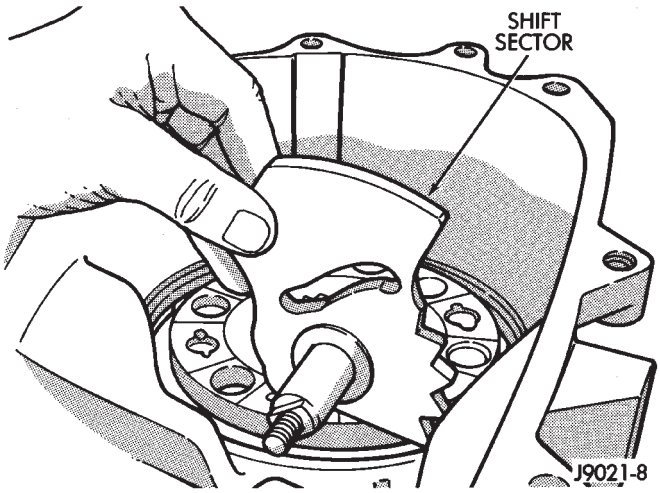

Fig. 48 Shift Sector Installation

(3) Install range lever and lever attaching nut on shift sector. Tighten attaching nut to 30 N·m (22 ft. lbs.) torque.

(4) Install detent plunger, spring and plug (Fig. 49). Tighten plug to 20 N·m (15 ft. lbs.) torque.

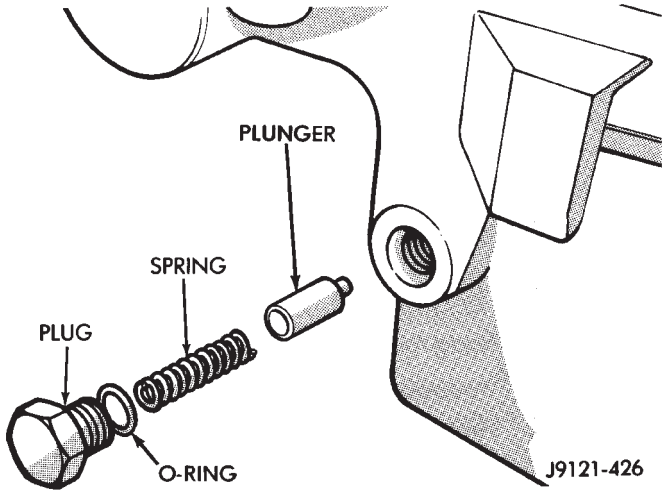

Fig. 49 Installing Detent Plunger, Spring And Plug

(5) Inspect pads on range fork (Fig. 50). Be sure pads are secure and in position. Replace fork as an assembly if pads are worn through, or broken.

(6) Assemble range fork and shift hub (Fig. 51).

(7) Engage range fork pin in shift sector slot (Fig. 52).

(8) Insert shift hub in low range gear. Be sure hub is fully seated.

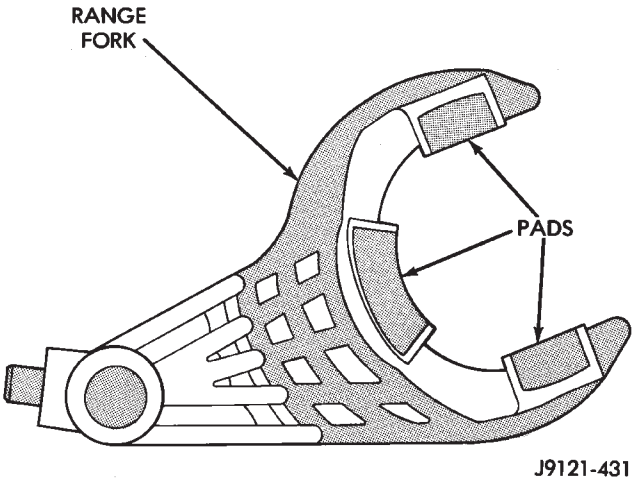

Fig. 50 Range Fork Pad Locations

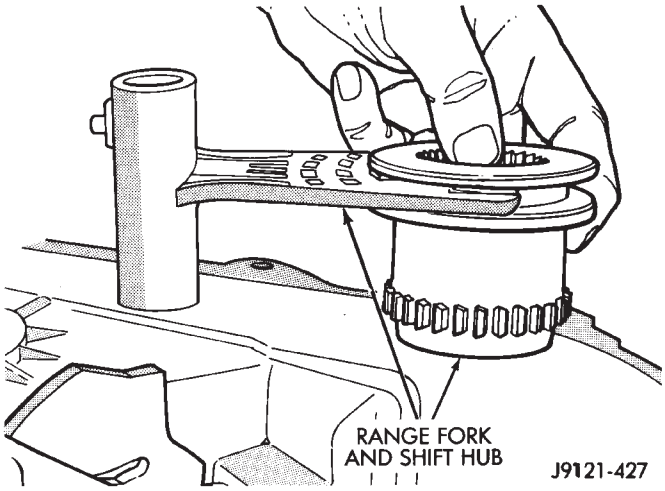

Fig. 51 Assembling Range Fork And Shift Hub

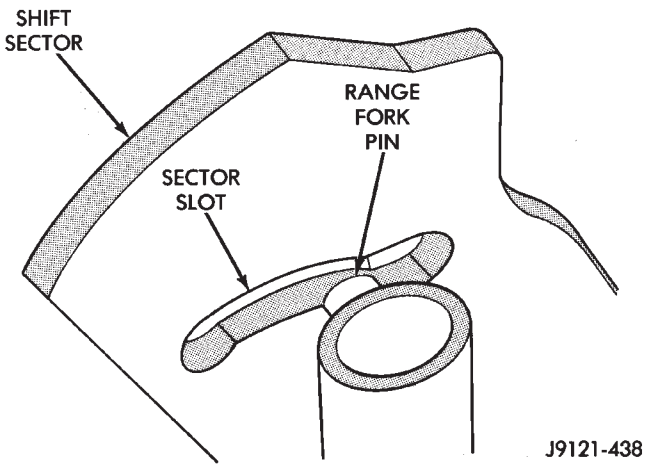

Fig. 52 Seating Range Fork Pin In Shift Sector Slot

MAINSHAFT ASSEMBLY

(1) If drive sprocket bearings are to be replaced, remove and install them as follows:

(a) Press both bearings out of sprocket simultaneously with Tool Handle C-4171 and Remover Tool C-4667, or 5066 (Fig. 53).

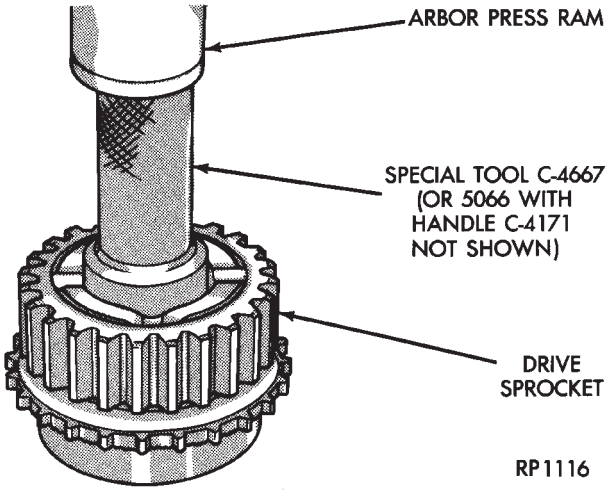

Fig. 53 Drive Sprocket Bearing Removal

(b) Before installing new bearings, refer to Figure 54 and note correct bearing position in sprocket. Bearings must also be installed in proper sequence. Install front bearing first and rear bearing last.

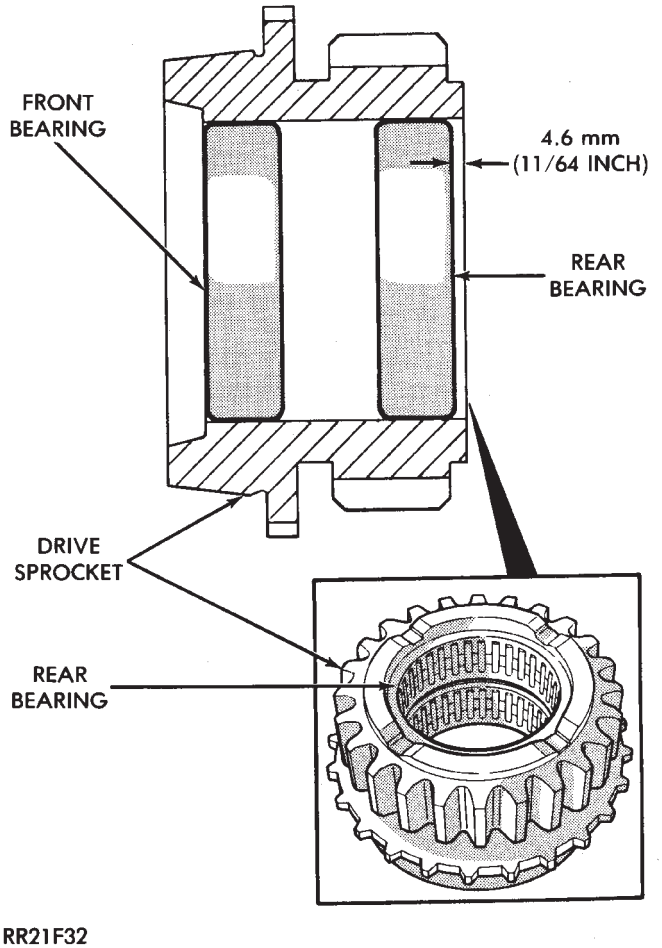

Fig. 54 Correct Bearing Position In Drive Sprocket

CAUTION: Do not press the bearings any farther into the sprocket than indicated in Figure 54. The bearings could block the mainshaft oil feed hole if pressed too deeply into the sprocket.

(c) Install new **front** bearing first. Press bearing flush with edge of sprocket bore (Fig. 55).

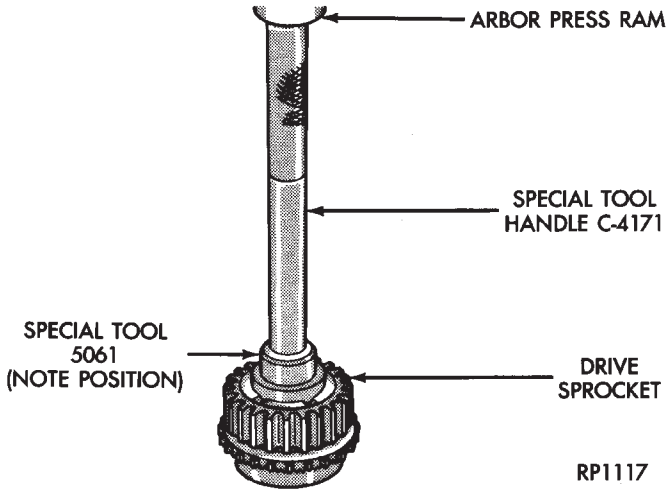

Fig. 55 Installing Drive Sprocket Front Bearing

(d) Install new **rear** bearing (Fig. 56). Press bearing in until 4.6 mm (3/16 in.) below edge of bore as shown in Figure 46.

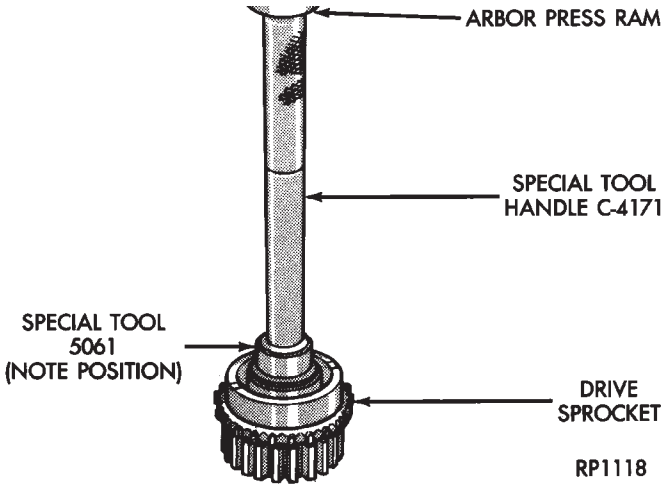

Fig. 56 Installing Drive Sprocket Rear Bearing

(2) On synchro models, install struts and spring(s) in hub (Fig. 57).

(3) Lubricate drive sprocket bearings, stop ring and hub with automatic transmission fluid. Bearings can also be lubricated with petroleum jelly if desired.

(4) Install sprocket, stop ring (synchro models only) and hub on mainshaft (Fig. 58). **Be sure to seat hub struts on stop ring lugs.**

(5) Install spacer washer on hub, if equipped.

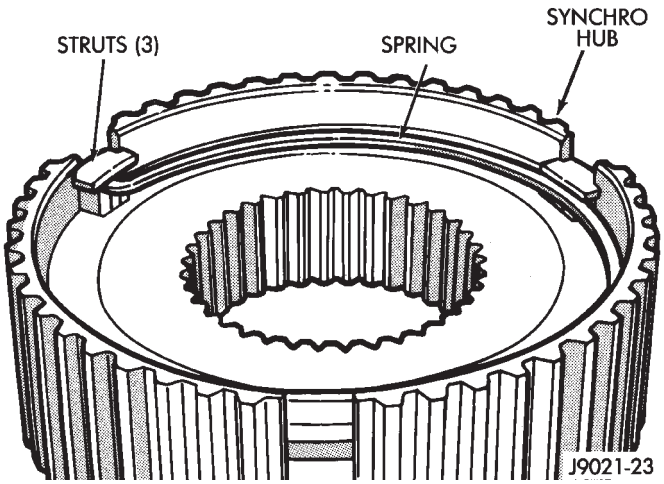

Fig. 57 Installing Synchro Springs And Struts In Hub

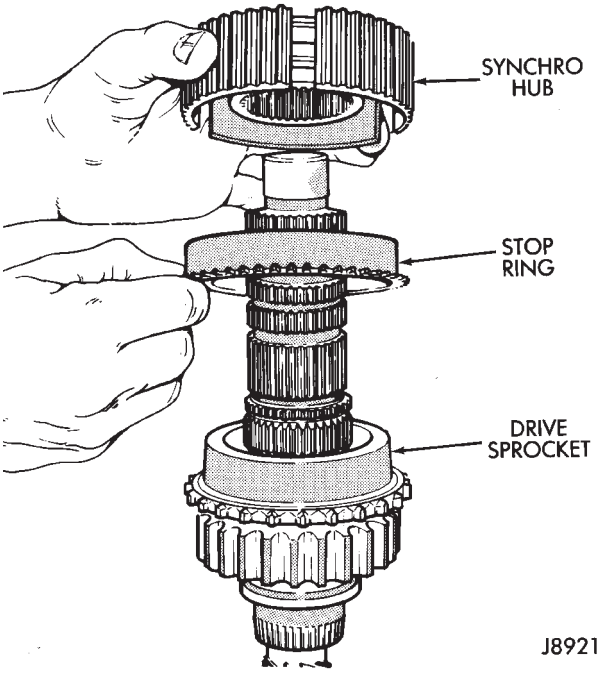

Fig. 58 Sprocket, Stop Ring And Hub Installation

(6) Install new hub retaining snap ring (Fig. 59).

MAINSHAFT AND MODE FORK INSTALLATION

(1) Install sleeve on hub. Be sure sleeve is installed with beveled spline ends facing stop ring and short end of sleeve toward raer of shaft. In addition, on synchro models, be sure a sleeve tooth is aligned with each synchro strut (Fig. 60).

CAUTION: Correct sleeve alignment is important to proper shifting on synchro models. Be sure a sleeve tooth is aligned (centered) over each synchro strut (Fig. 60). Gear clash will occur if the struts and sleeve teeth are misaligned.

(2) Install new pads on mode fork.

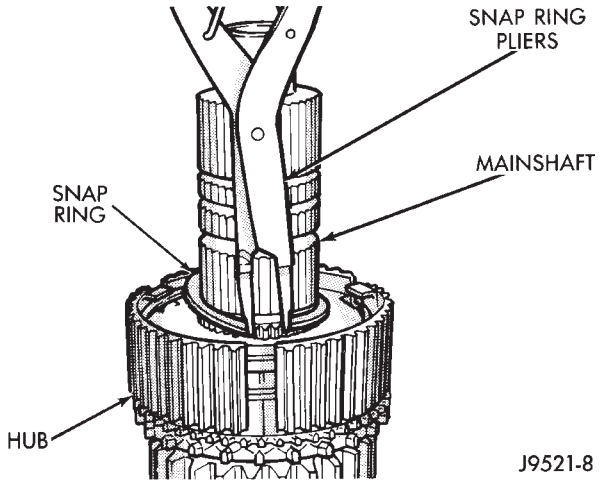

Fig. 59 Installing Hub Retaining Snap Ring

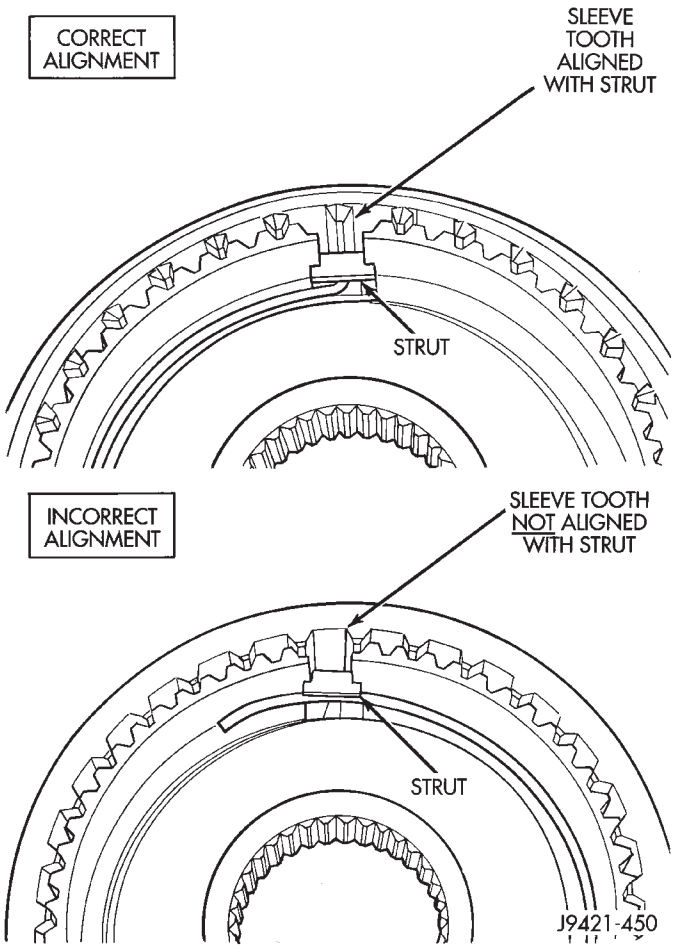

Fig. 60 Correct Synchro Strut And Sleeve Alignment (Synchro Models Only)

(3) Engage mode fork in sleeve (Fig. 61).

(4) Install mode fork-mainshaft assembly in case (Fig. 61). Be sure the mode fork rail is seated in case bore.

(5) Lift mainshaft upward about 2.54 cm (1-inch).

(6) Position front output shaft in drive chain.

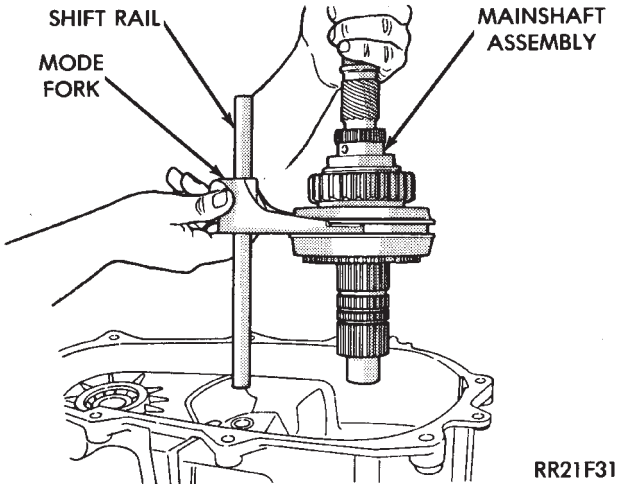

Fig. 61 Installing Mainshaft And Mode Fork Assembly

(7) Install chain on drive sprocket and start front shaft into front bearing at same time (Fig. 62).

(8) Seat mainshaft and front output shaft (Fig. 54). If front shaft is hard to seat, lift mainshaft slightly to allow front shaft to seat.

(9) Reseat mainshaft in input gear and seat sleeve on hub if necessary.

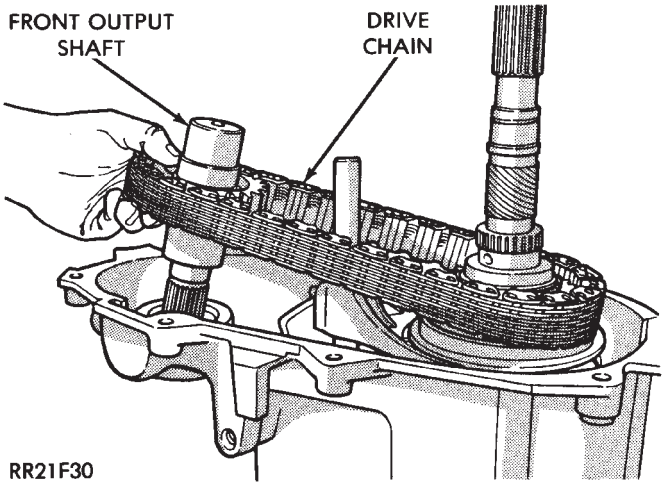

Fig. 62 Installing Drive Chain And Front Output Shaft

(10) Install mode spring on shift rail (Fig. 63).

OIL PUMP, REAR CASE, REAR RETAINER AND EXTENSION INSTALLATION

(1) Install new seal in oil pump feed housing with Special Tool 7888 (Fig. 64).

(2) Install new pickup tube O-ring in oil pump (Fig. 65).

(3) Prime oil pump by pouring transmission fluid into pump through pickup tube opening.

(4) Insert pickup tube in oil pump. Then attach oil screen and connecting hose to pickup tube (Fig. 66).

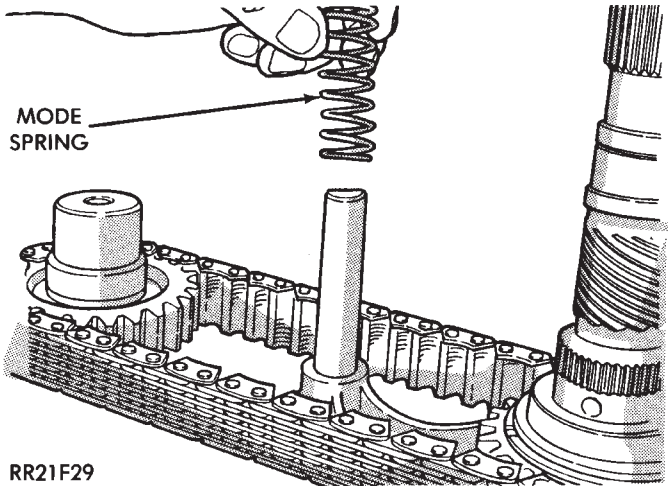

Fig. 63 Installing Mode Spring On Shift Rail

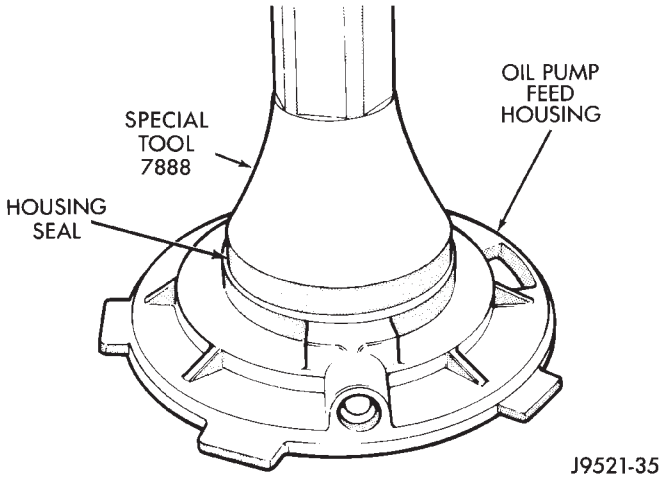

Fig. 64 Oil Pump Seal Installation

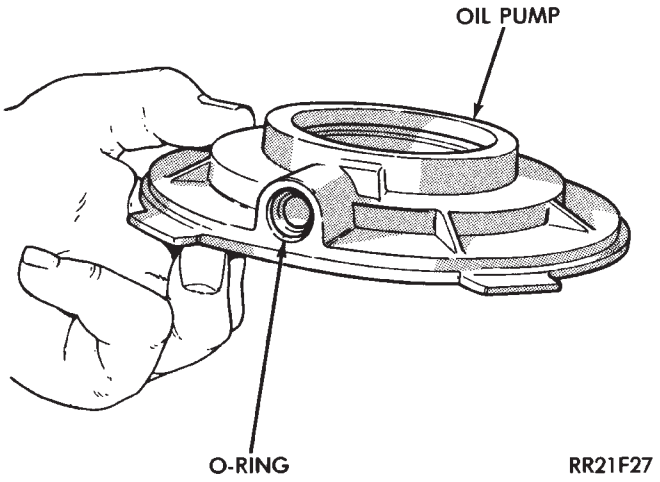

Fig. 65 Pickup Tube O-Ring Installation

(5) Install assembled pump, pickup tube and screen in rear case. Be sure screen is seated in case slot as shown (Fig. 66).

(6) Install magnet in front case pocket.

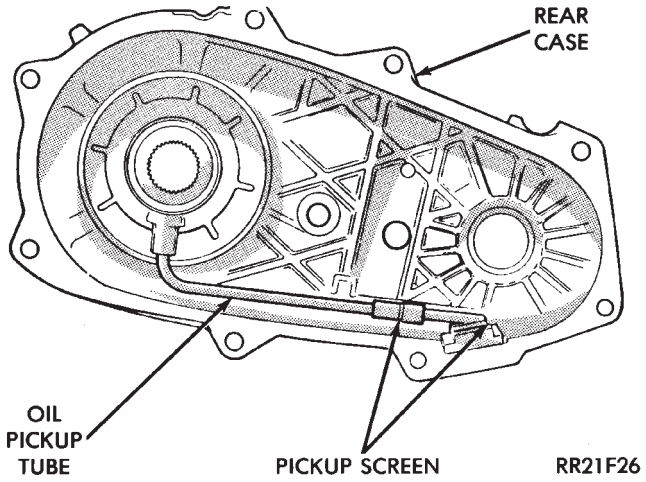

Fig. 66 Pickup Tube, Oil Screen And Pump Installation

(7) Clean sealing surfaces of rear case front case, retainer and extension. Use 3M all puspose cleaner or equivalent product.

(8) Apply 3 mm (1/8 in.) wide bead of Mopar gasket maker, silicone adhesive sealer, or Loctite 518 to sealing surface of front case.

(9) Align and install rear case/oil pump assembly on front case (Fig. 67). Be sure case locating dowels are in place and that mainshaft splines are engaged in oil pump inner gear.

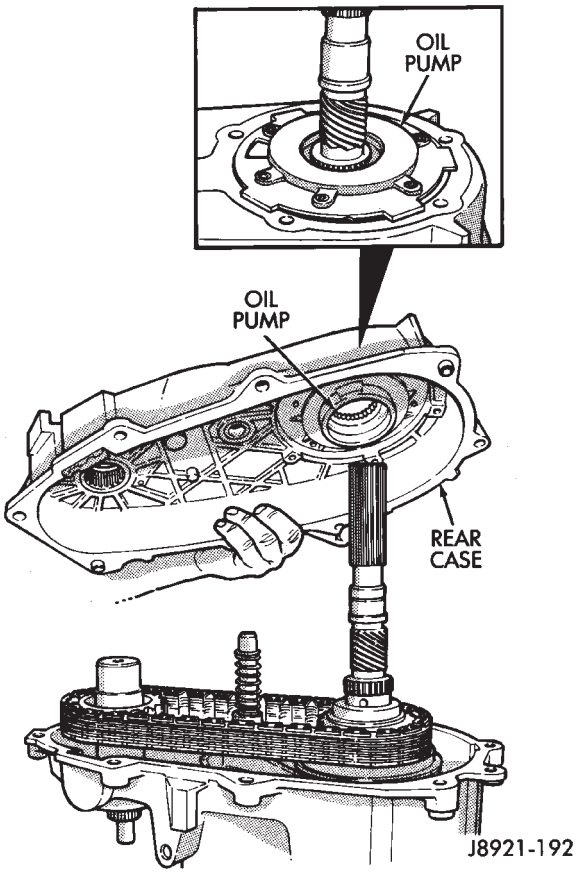

Fig. 67 Installing Rear Case On Front Case

(10) Install and tighten front case-to-rear case attaching bolts to 27-34 N·m (20-25 ft. lbs.) torque. **Be sure to install a washer under each bolt used at case dowel locations.**

(11) Install output bearing in rear retainer. Tap old bearing out of retainer with hammer and brass drift. Then install new bearing with Tool Handle C-4171 and Installer 5064 (Fig. 68).

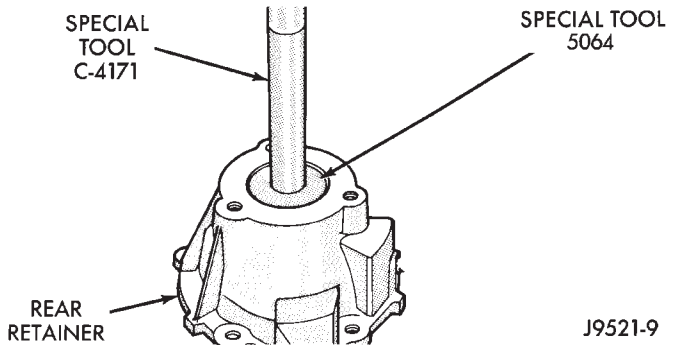

Fig. 68 Installing Mainshaft Rear Bearing In Rear Retainer

(12) Apply 3 mm (1/8 in.) wide bead of Mopar gasket maker, silicone adhesive sealer, or Loctite 518 to flange surface of rear retainer.

(13) Align and install rear retainer on rear case. Install and tighten retainer bolts to 27-34 N·m (20-25 ft. lbs.) torque.

(14) Install new output bearing snap ring (Fig. 69). Lift mainshaft slightly to seat snap ring in shaft groove if necessary.

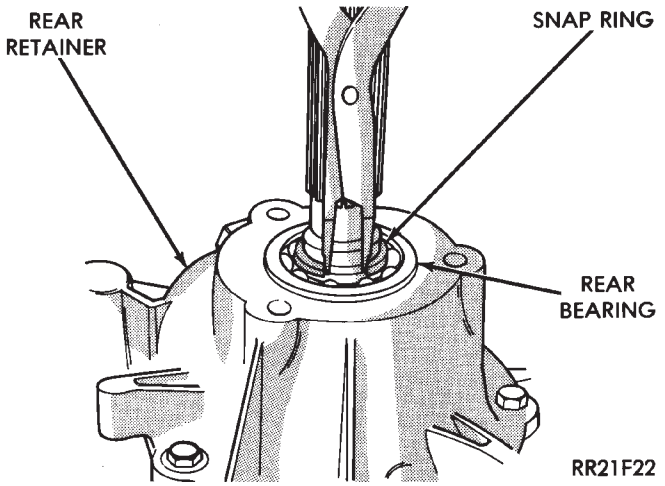

Fig. 69 Installing Output (Rear) Bearing Snap Ring

(15) Remove extension housing seal if not removed previously.

(16) Remove extension housing bushing with Bushing Installer Tools C-4171 and 7889-A (Fig. 70).

(17) Install new extension housing bushing with Installer Tools C-4171 and 5066 (Fig. 71).

(18) Install new seal in extension. Use suitable size socket, or installer tool to seat seal.

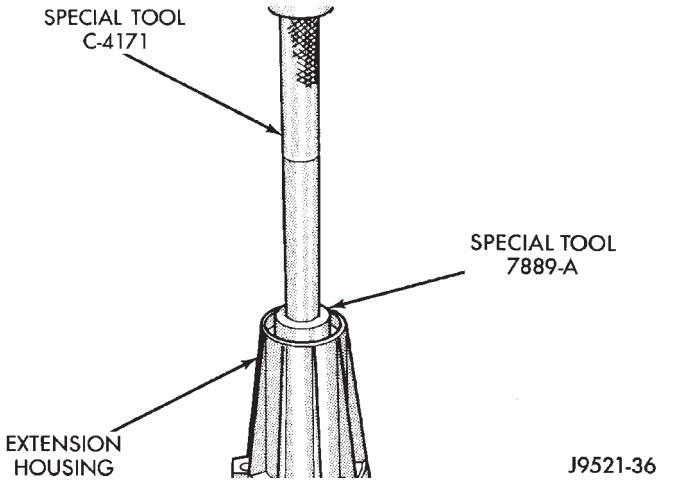

Fig. 70 Removing Extension Housing Bushing

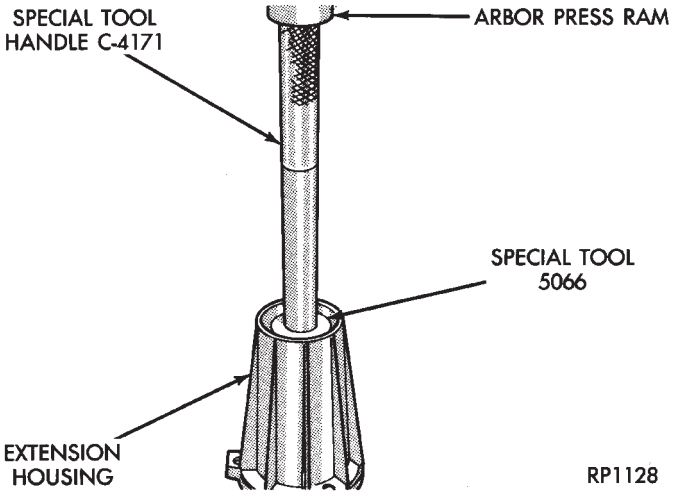

Fig. 71 Installing Extension Housing Bushing

(19) Apply 3 mm (1/8 in.) wide bead of Mopar gasket maker, silicone adhesive sealer, or Loctite 518 to mounting surface of extension housing.

(20) Align and install extension on retainer. Then install and tighten extension bolts to 27-34 N·m (20-25 ft. lbs.) torque.

(21) Install new seal on front output shaft (Fig. 72).

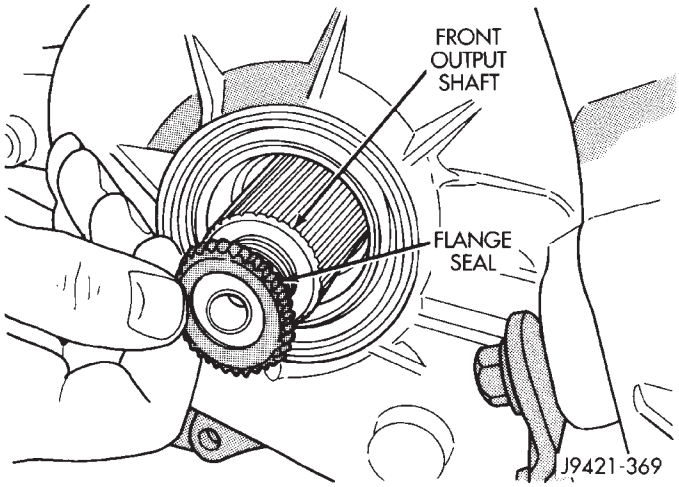

Fig. 72 Installing Seal On Front Shaft

(22) Install front yoke on front shaft. Secure yoke with replacement nut. Tighten nut to 149 N·m (110 ft. lbs.) torque.

(23) Install replacement gasket on indicator switch and install switch in case.

(24) Install tighten drain plug to 47 N·m (35 ft. lbs.) torque.

(25) Install indicator or vacuum switch in case. Tighten switch to 27-34 N·m (20-25 ft. lbs.) torque.

(26) Install speedometer pinion and adapter.

(27) Fill transfer case with recommended lubricant.

(28) Install and tighten fill plug to 41 N·m (35 ft. lbs.) torque.

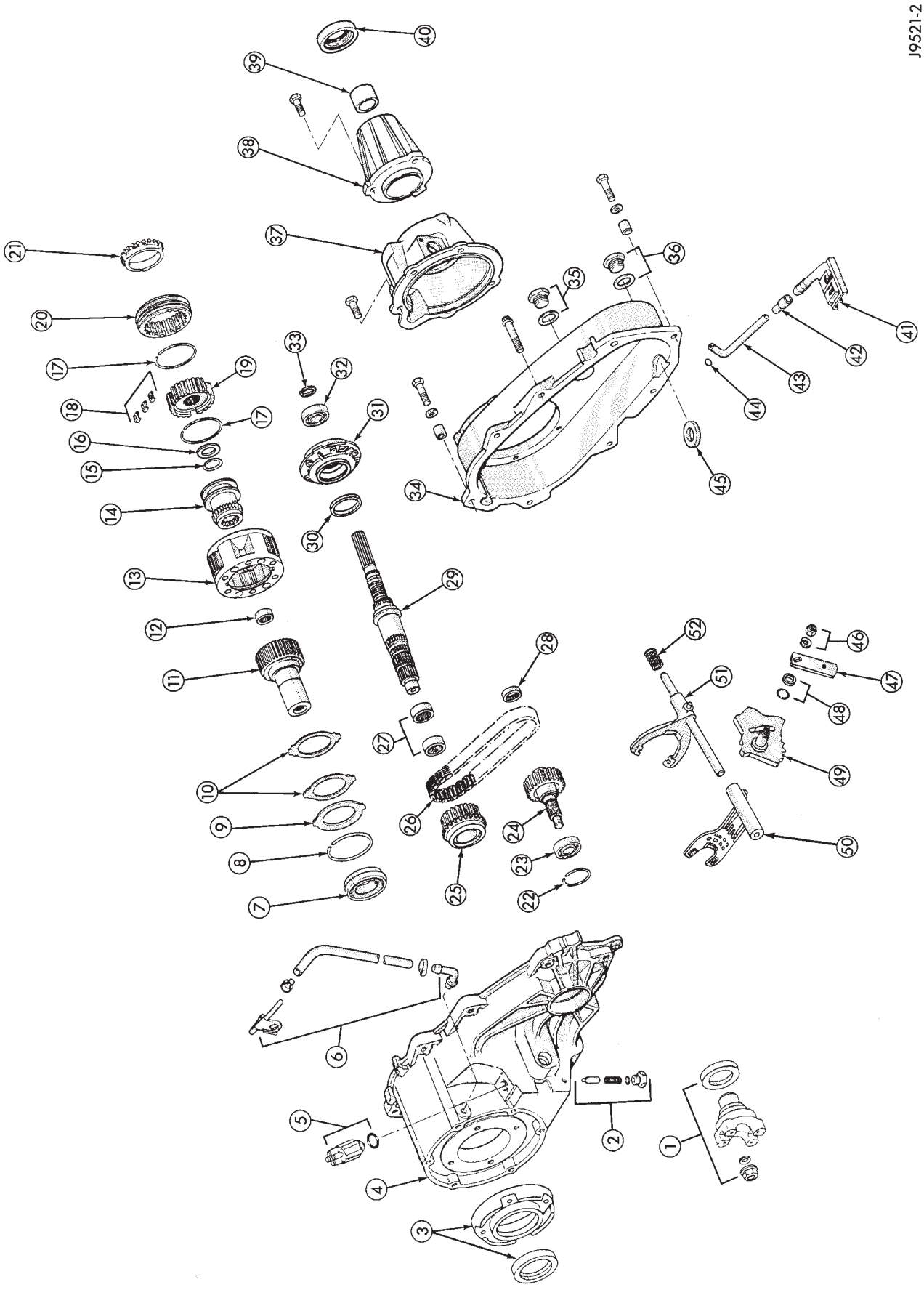
J9521-2
NP231 TRANSFER CASE

LEGEND FOR NP231 TRANSFER CASE

1. FRONT YOKE, NUT, SEAL WASHER, AND OIL SEAL
2. SHIFT DETENT PLUG, SPRING AND PIN
3. FRONT RETAINER AND SEAL
4. FRONT CASE
5. 4WD INDICATOR SWITCH
6. VENT ASSEMBLY
7. INPUT GEAR BEARING AND SNAP RING
8. LOW RANGE GEAR SNAP RING
9. INPUT GEAR RETAINER
10. LOW RANGE GEAR THRUST WASHERS
11. INPUT GEAR
12. INPUT GEAR PILOT BEARING
13. LOW RANGE GEAR
14. RANGE FORK SHIFT HUB
15. HUB SNAP RING
16. SPACER WASHER
17. SYNCHRO SPRINGS*
18. SYNCHRO STRUTS*
19. HUB
20. SLEEVE
21. STOP RING*
22. SNAP RING, FRONT BEARING
23. OUTPUT SHAFT FRONT BEARING
24. FRONT OUTPUT SHAFT
25. DRIVE SPROCKET
26. DRIVE CHAIN
27. DRIVE SPROCKET BEARINGS
28. OUTPUT SHAFT REAR BEARING
29. MAINSHAFT
30. OIL SEAL
31. OIL PUMP ASSEMBLY
32. MAINSHAFT REAR BEARING
33. SNAP RING
34. REAR CASE
35. FILL PLUG AND GASKET
36. DRAIN PLUG AND GASKET
37. REAR RETAINER
38. EXTENSION
39. BUSHING
40. OIL SEAL
41. OIL PICKUP SCREEN
42. TUBE CONNECTOR
43. OIL PICKUP TUBE
44. PICKUP TUBE O-RING
45. MAGNET
46. RANGE LEVER NUT AND WASHER
47. RANGE LEVER
48. SECTOR O-RING AND RETAINER BUSHING
49. SECTOR
50. MODE SPRING
51. MODE FORK
52. RANGE FORK

* SYNCHRO EQUIPPED MODELS ONLY.

J9521-3

NP242 TRANSFER CASE

INDEX

	page		page
General Information	307	Speedometer Service	309
Operating Ranges	307	Transfer Case Assembly	319
Overhaul Cleaning and Inspection	318	Transfer Case Changes	307
Recommended Lubricant/Capacity/Fill Level	307	Transfer Case Disassembly and Overhaul	310
Shift Lever Installation (XJ)	309	Transfer Case Identification	307
Shift Lever Removal (XJ)	309	Transfer Case Installation	309
Shift Linkage Adjustment	309	Transfer Case Removal	309
Shift Mechanism	307		

GENERAL INFORMATION

The NP242 is a full and part-time transfer case (Fig. 1). It provides full time 2-wheel, or 4-wheel drive operation. The NP242 is used in XJ models.

A differential in the transfer case is used to control torque transfer to the front and rear axles. A low range gear provides increased low speed torque capability for off road operation. The low range provides a 2.72:1 reduction ratio.

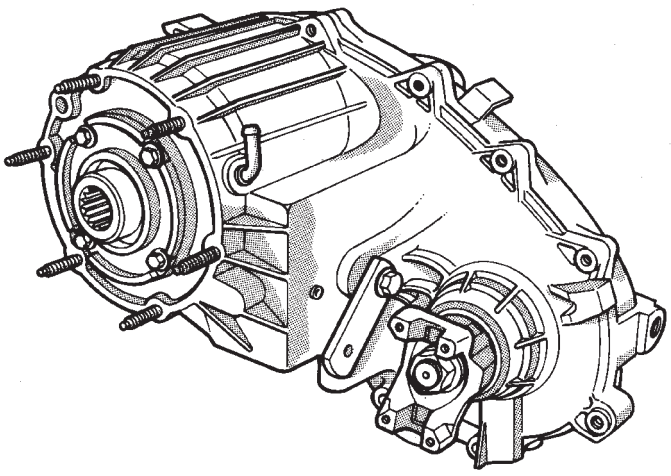

J8921-243

Fig. 1 NP242 Transfer Case

OPERATING RANGES

NP242 operating ranges are 2WD (2-wheel drive), 4x4 part-time, 4x4 full time, and 4 Lo.

The 2WD and 4x4 full time ranges can be used at any time and on any road surface.

The 4x4 part-time and 4 Lo ranges are for off road use only. The only time these ranges can be used on hard surface roads, is when the surface is covered with snow and ice.

SHIFT MECHANISM

Transfer case operating ranges are selected with a floor mounted shift lever. The shift lever is connected to the transfer case range lever by an adjustable linkage rod. Range positions are marked on the shift knob or shifter bezel plate.

TRANSFER CASE IDENTIFICATION

A circular I.D. tag is attached to the rear case of each NP242 transfer case (Fig. 2). The tag provides the transfer case model number, assembly number, serial number and low range ratio.

The transfer case serial number also represents the date of build. For example, a serial number of 1-10-94 would represent January 10, 1994.

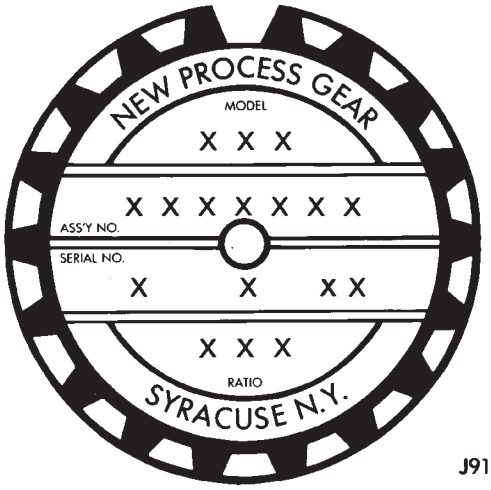

J9121-434

Fig. 2 Transfer Case I.D. Tag

RECOMMENDED LUBRICANT/CAPACITY/FILL LEVEL

Mopar Dexron II is the recommended fluid for the NP242 transfer case. Approximate dry fill lubricant capacity is 1.4 liters (1.48 qts.).

Correct transfer case lubricant level is to the bottom edge of the fill plug hole.

TRANSFER CASE CHANGES

The only service change for 1995 involves the front output shaft seal which is new. The new seal does not have the flange used on prior seals and changes seal installation. The new seal must be seated below the edge of the seal bore in the front case. Refer to the overhaul information for seal installation.

NP242 SERVICE DIAGNOSIS

Condition	Possible Cause	Correction
TRANSFER CASE DIFFICULT TO SHIFT OR WILL NOT SHIFT INTO DESIRED RANGE	(1) Transfer case external shift linkage binding.	(1) Lubricate, repair or replace linkage, or tighten loose components as necessary.
	(2) Insufficient or incorrect lubricant.	(2) Drain and refill to edge of fill hole with DEXRON II® or MOPAR-MERCON® Automatic Transmission Fluid.
	(3) Internal components binding, worn or damaged.	(3) Disassemble unit and replace worn or damaged components as necessary.
TRANSFER CASE NOISY IN ALL DRIVE POSITIONS	(1) Insufficient or incorrect lubricant.	(1) Drain and refill to edge of fill hole with DEXRON II® or MOPAR-MERCON® Automatic Transmission Fluid. Check for leaks and repair if necessary **Note: If unit is still noisy after drain and refill, disassembly and inspection may be required to locate source of noise.**
LUBRICANT LEAKING FROM OUTPUT SHAFT SEALS OR FROM VENT	(1) Transfer case overfilled.	(1) Drain to correct level.
	(2) Vent closed or restricted.	(2) Clear or replace vent if necessary.
	(3) Output shaft seals damaged or installed incorrectly.	(3) Replace seals. Be sure seal lip faces interior of case when installed. Also be sure yoke seal surfaces are not scored or nicked. Remove scores and nicks with fine sandpaper or replace yoke(s) if necessary.
TRANSFER CASE WILL NOT SHIFT THROUGH 4 X 4 PART-TIME RANGE (Light Remains On).	(1) Incomplete shift due to drivetrain torque load.	(1) Driver must momentarily release the accelerator pedal to complete the shift.
	(2) Incorrect tire pressure(s).	(2) Inflate all tires equally to correct pressure.
	(3) Excessive tire wear.	(3) Switch tires — Install the two tires with the most wear (one on the front axle and one on the rear axle).
	(4) Excessive vehicle loading.	(4) Check vehicle loading — **Do not exceed the vehicle's GVW.**

J9121-435

SHIFT LINKAGE ADJUSTMENT

(1) Shift transfer case into 4L position.
(2) Raise vehicle.
(3) Loosen lock bolt on adjusting trunnion (Fig. 3).
4) Verify that linkage rod slides freely in trunnion. Clean rod and apply spray lube if necessary.
(5) Verify that transfer case range lever is fully engaged in 4L position.
(6) Tighten adjusting trunnion lock bolt.
(7) Lower vehicle.
(8) Verify proper shift operation.

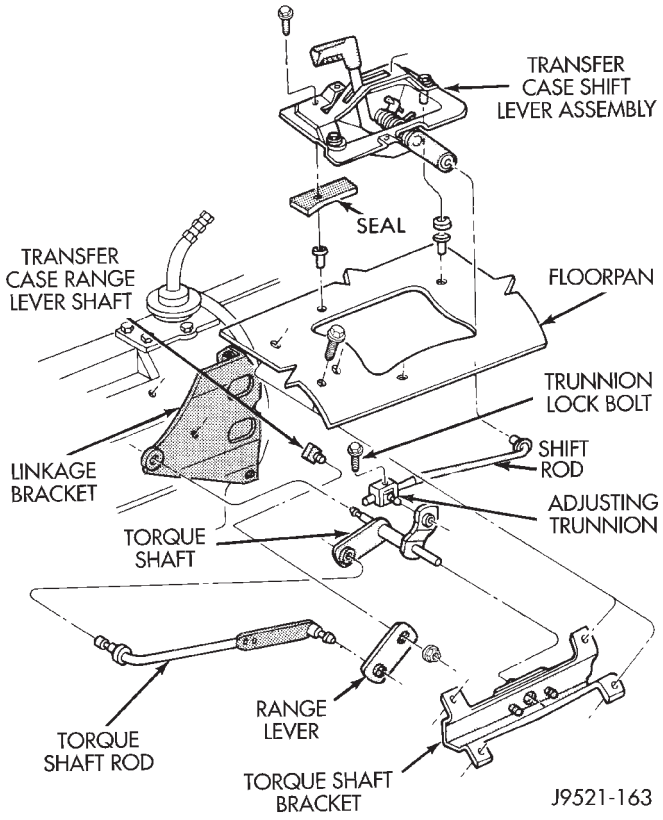

Fig. 3 Shift Linkage (XJ)

SHIFT LEVER REMOVAL (XJ)

(1) Shift transfer case into 4L.
(2) Raise vehicle.
(3) Loosen adjusting trunnion locknut and slide shift rod out of trunnion (Fig. 4). If rod lacks enough travel to come out of trunnion, push trunnion out of torque shaft.
(4) Lower vehicle.
(5) Remove console. Refer to park brake section in Group 5 for procedures.
(6) Remove screws attaching lever assembly to floorpan and remove assembly and shift rod (if left attached).

SHIFT LEVER INSTALLATION (XJ)

(1) If shift rod was not removed from lever assembly, work rod down through floorpan opening. Then position lever assembly on floorpan and install assembly attaching screws.
(2) Install console.
(3) Raise vehicle.
(4) Connect trunnion to torque shaft arm. Or, slide shift rod into trunnion on range lever.
(5) Tighten trunnion lock bolt.
(6) Lower vehicle.
(7) Lower vehicle.
(8) Remove shift lever spacer and install bezel.

SPEEDOMETER SERVICE

Speedometer service procedures are covered in the automatic transmission sections within Group 21. Refer to these sections when necessary.

TRANSFER CASE REMOVAL

(1) Shift transfer case into Neutral.
(2) Raise vehicle.
(3) Drain transfer case lubricant.
(4) Mark front and rear propeller shaft yokes for alignment reference.
(5) Place support stand under transmission.
(6) Remove rear crossmember.
(7) Disconnect front/rear propeller shafts at transfer case.
(8) Disconnect vehicle speed sensor wires and remove sensor and adapter assembly if necessary.
(9) Disconnect shift rod from transfer case range lever.
(10) Disconnect transfer case vent hoses and electrical switch connector.
(11) Support transfer case with transmission jack.
(12) Remove bolts attaching transfer case to transmission.
(13) Secure transfer case to jack with chains.
(14) Pull transfer case and jack rearward to disengage transfer case.
(15) Remove transfer case from under vehicle.
(16) If transfer case was removed for overhaul, remove damper from rear retainer.

TRANSFER CASE INSTALLATION

(1) Install damper on transfer case rear retainer, if equipped (Fig. 4). Tighten damper attaching nuts to 54 N·m (40 ft. lbs.) torque.
(2) Mount transfer case on transmission jack. Secure transfer case to jack with safety chains.
(3) Position transfer case under vehicle.
(4) Align transfer case and transmission shafts and slide transfer case onto transmission.
(5) Install and tighten transfer case attaching nuts to 35 N·m (26 ft. lbs.) torque.

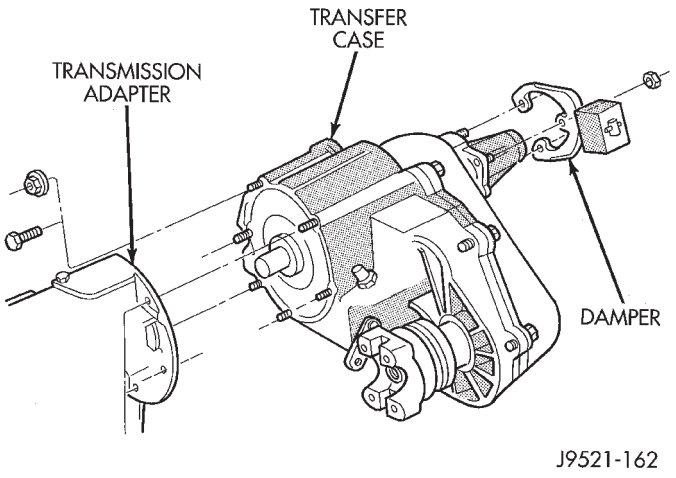

Fig. 4 Damper Mounting

(6) Install vehicle speed sensor and adapter, if removed. Then connect vehicle speed sensor wires, vent hoses and electrical switch connector.

(7) Align and connect propeller shafts. Tighten shaft U-joint clamp bolts to 19 N·m (14 ft. lbs.) torque.

(8) Fill transfer case with Mopar Dexron II. Correct fill level is to bottom edge of fill plug hole.

(9) Install rear crossmember. Tighten crossmember bolts to 41 N·m (30 ft. lbs.) torque.

(10) Remove transmission jack and transmission support stand.

(11) Move transfer case range lever to 4L position.

(12) Connect shift rod to transfer case range lever.

(13) Adjust transfer case shift linkage as described in this section.

(14) Lower vehicle.

TRANSFER CASE DISASSEMBLY AND OVERHAUL

(1) Remove fill and drain plugs.

(2) Remove front yoke. Discard yoke seal washer and nut.

(3) Place transfer case range lever in 4L position.

(4) Remove extension housing attaching bolts.

(5) Tap extension housing in a clockwise direction to break sealer bead and remove housing (Fig. 1).

CAUTION: To avoid damaging the sealing surfaces of the extension housing and rear retainer, do not attempt to pry or wedge the housing off the retainer.

(6) Remove rear bearing snap ring from mainshaft (Fig. 2). Discard snap ring.

(7) Remove rear retainer attaching bolts.

(8) Loosen rear retainer (Fig. 3). Position long screwdriver under each tab at ends of retainer housing and pry retainer upward.

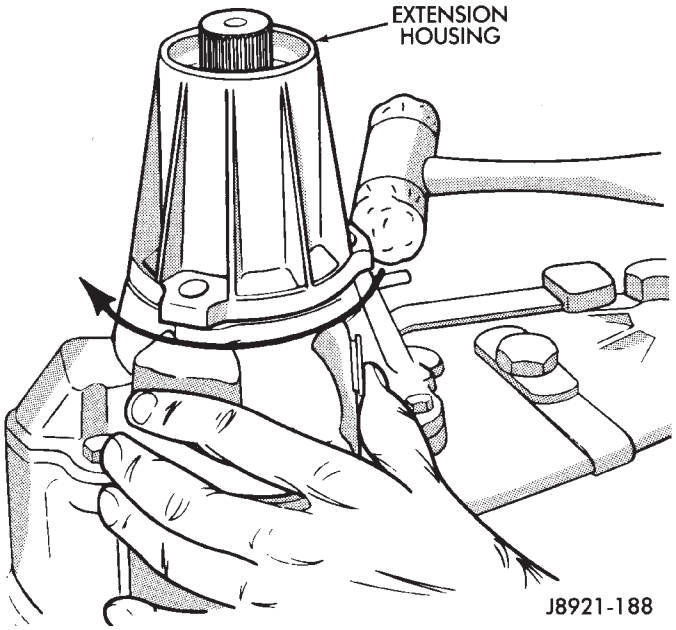

Fig. 1 Extension Housing Removal

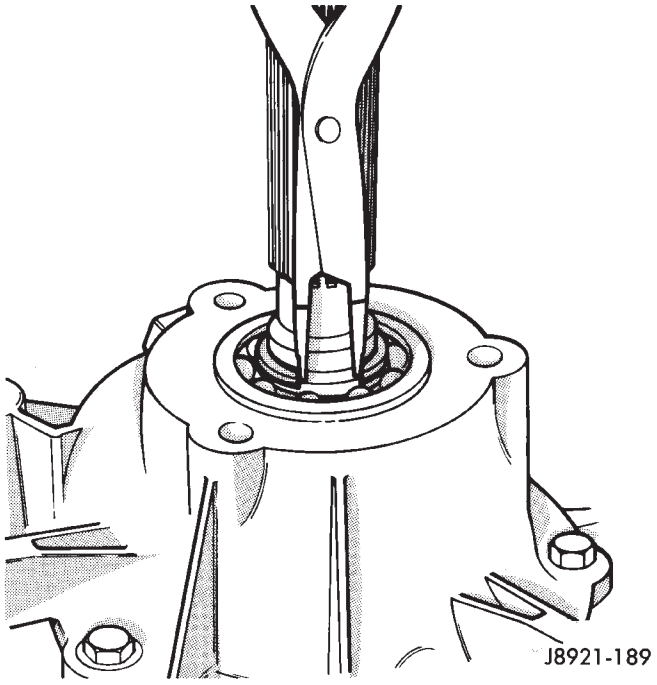

Fig. 2 Removing Rear Bearing Snap Ring

CAUTION: Do not pry against the sealing surfaces of the retainer or rear case. The surfaces could be damaged.

(9) Lift rear retainer up and off case and mainshaft (Fig. 4).

(10) Remove bolts attaching rear case to front case. Retain bolts and the washers.

(11) Loosen rear case with two screwdrivers (Fig. 5). Insert screwdrivers into slots cast in case ends. Then gently pry upward to break sealer bead.

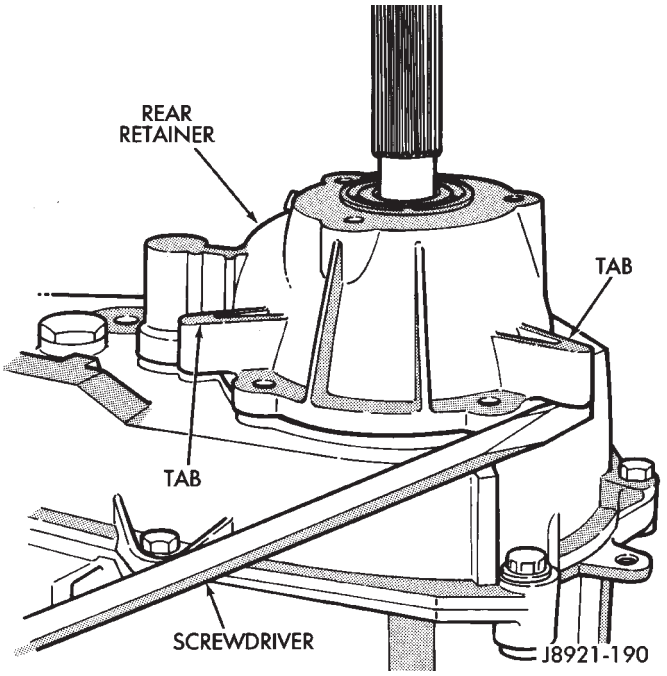

Fig. 3 Loosening Rear Retainer

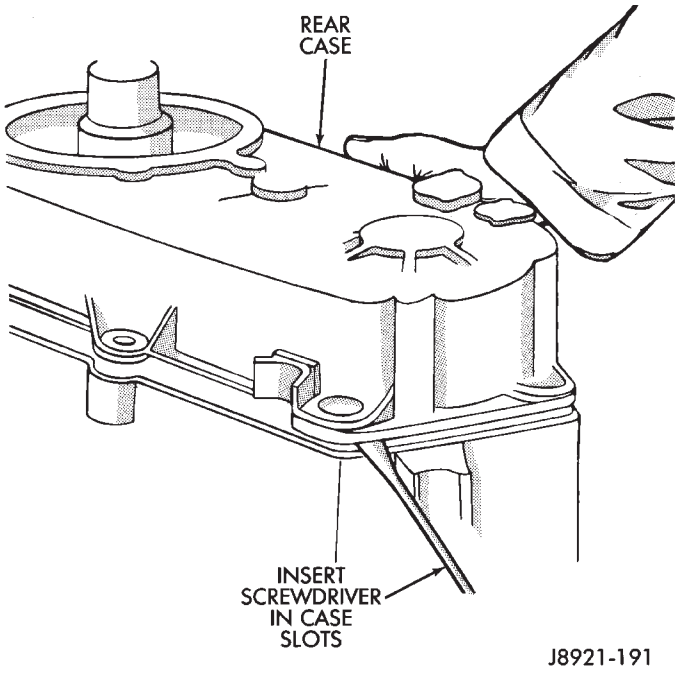

Fig. 5 Loosening Rear Case

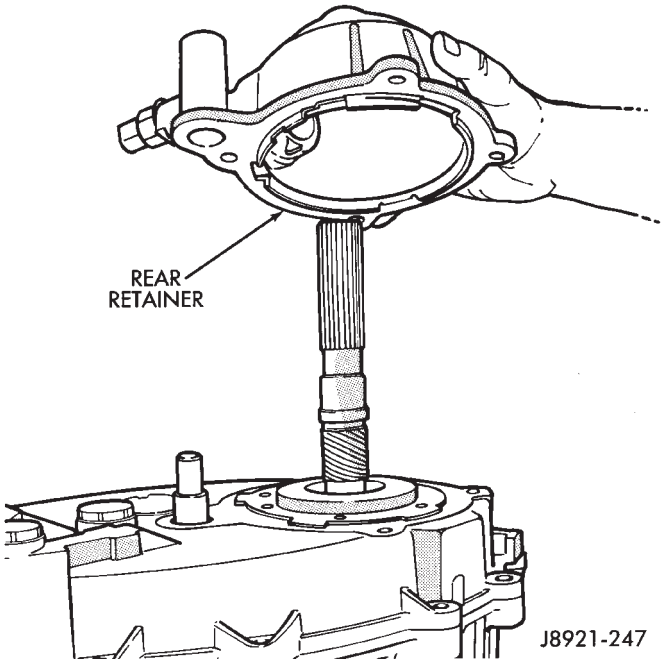

Fig. 4 Rear Retainer Removal

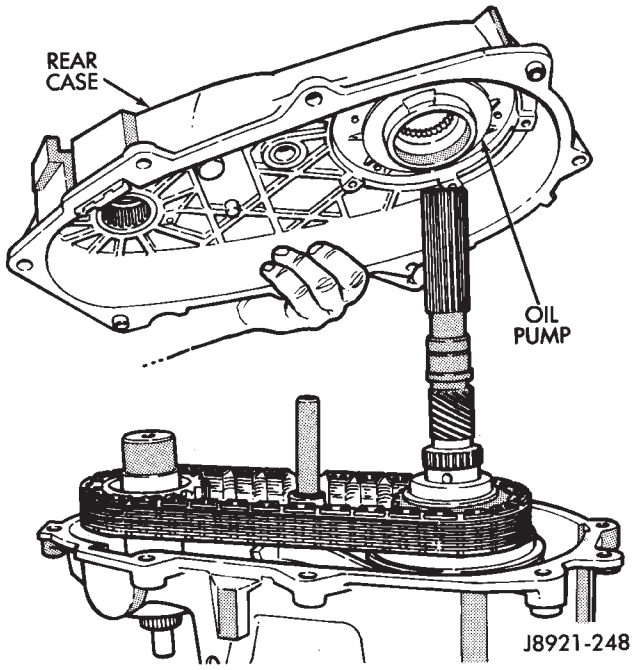

Fig. 6 Rear Case And Oil Pump Removal

CAUTION: Do not pry against the sealing surfaces of the front case or rear case. The surfaces could be damaged.

(12) Remove rear case and oil pump as assembly (Fig. 6).

(13) Slide oil screen (Fig. 7) out of case pocket.

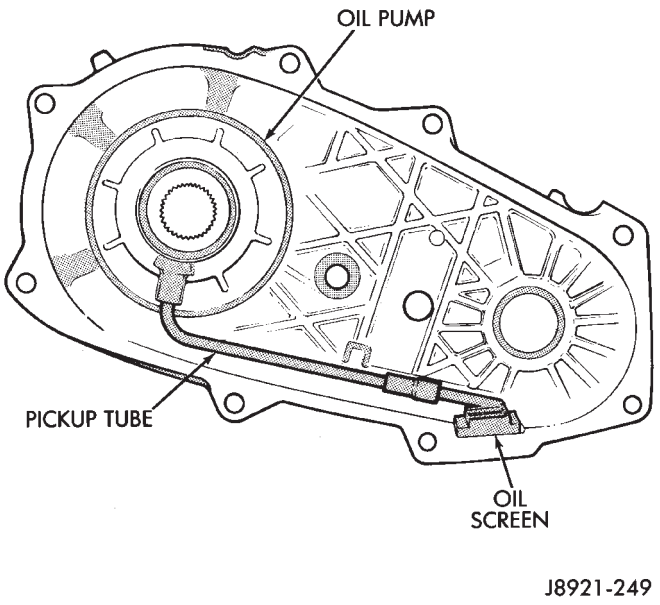

Fig. 7 Unseating Oil Screen

(14) Remove oil pump, pickup tube and oil screen from rear case (Fig. 8).

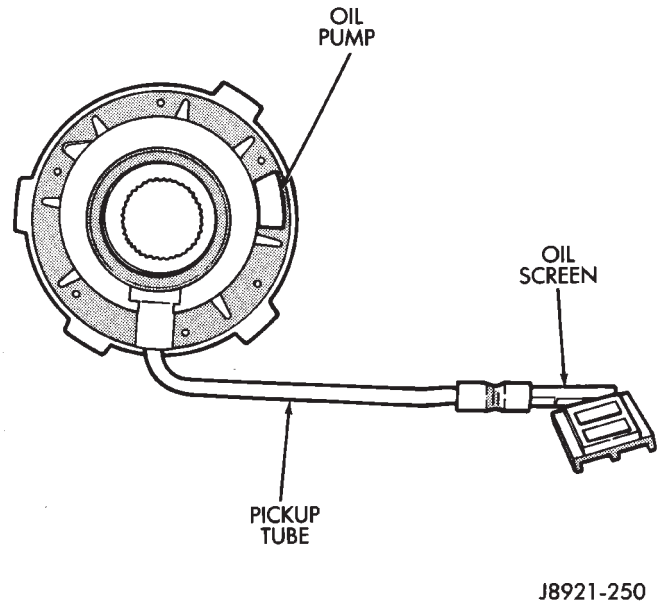

Fig. 8 Oil Pump/Pickup Tube/Screen Removal

(15) Remove pickup tube and screen from pump. **Do not disassemble oil pump; it is not repairable. Pumps are serviced only as an assembly.**

(16) Remove pickup tube O-ring from oil pump (Fig. 9).

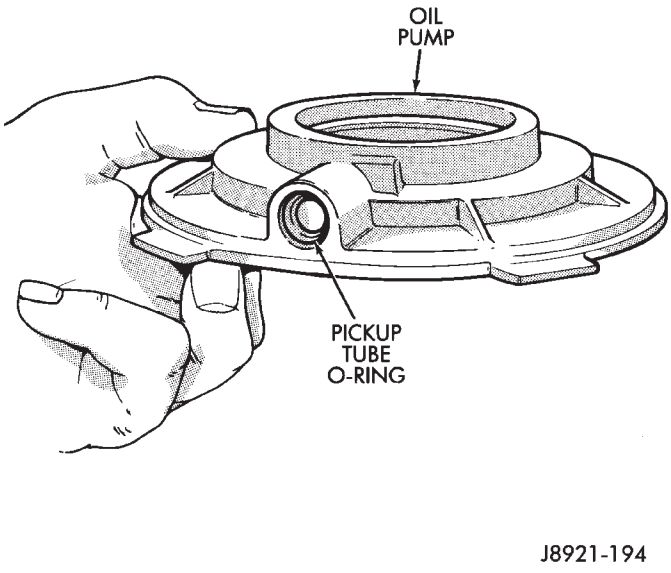

Fig. 9 Pickup Tube O-Ring Removal

(17) Remove and discard oil pump seal.
(18) Remove magnet from front case.
(19) Remove drive sprocket snap ring (Fig. 10).

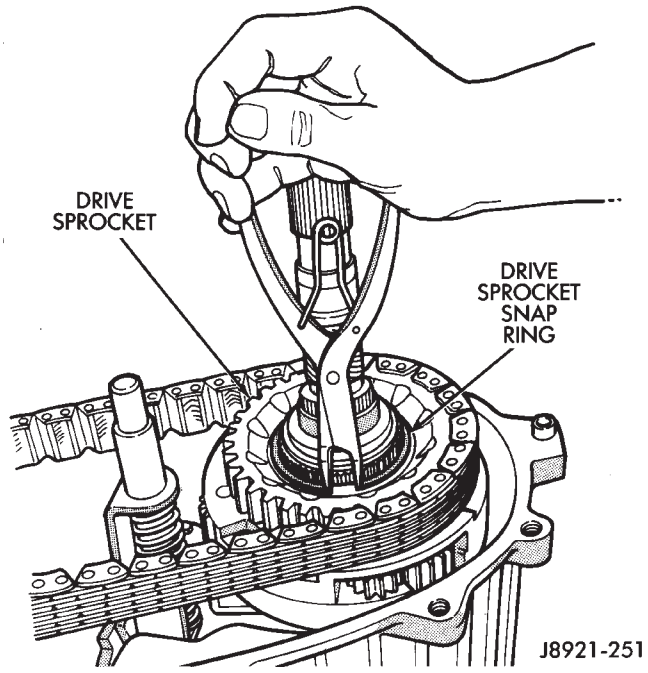

Fig. 10 Drive Sprocket Snap Ring Removal

(20) Remove drive sprocket and chain (Fig. 11).

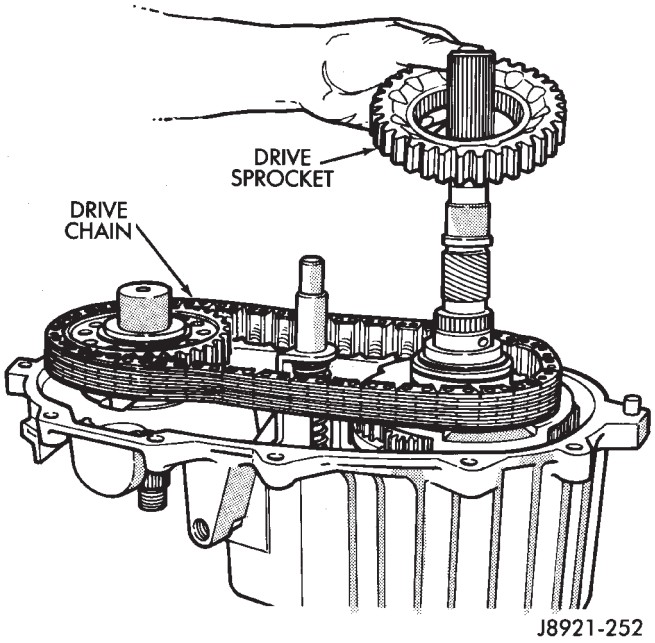

fig. 11 Drive Sprocket And Chain Removal

(21) Remove front output shaft (Fig. 12).

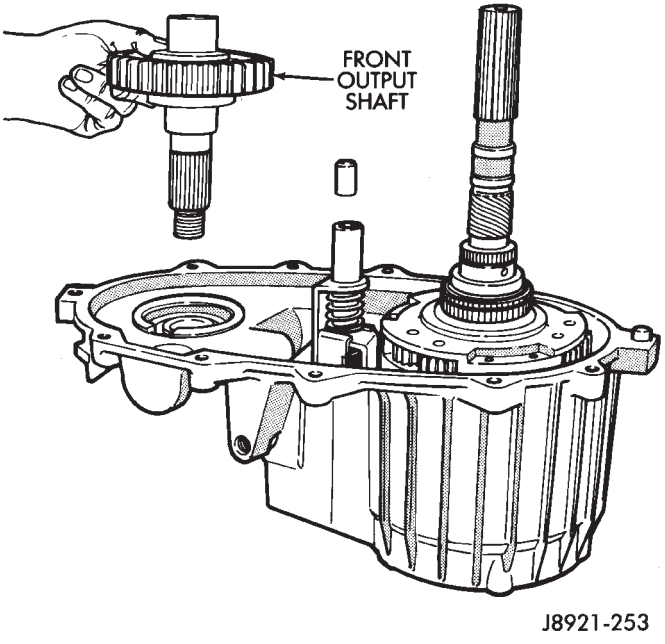

Fig. 12 Removing Front Output Shaft

(22) Remove transfer case shift lever nut and lever.

(23) Remove shift detent plug, spring and pin (Fig. 13)

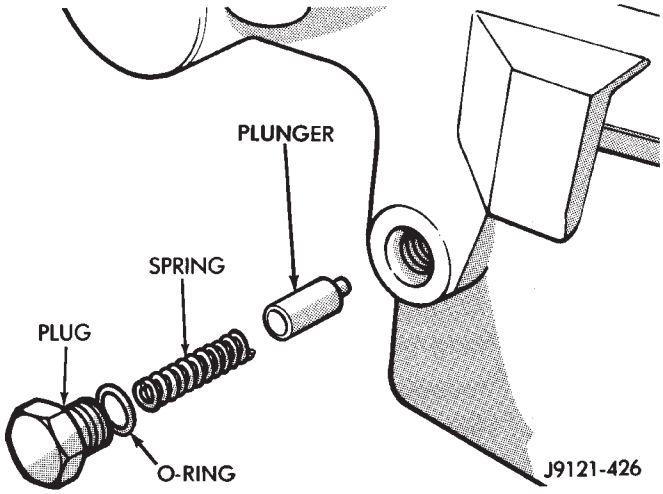

Fig. 13 Detent Component Removal

(24) Remove seal plug from low range fork lockpin access hole. Then move shift sector to align low range fork lockpin with access hole (Fig. 14).

(25) Remove range fork lockpin with size number one easy-out tool. Grip easy-out tool with locking pliers and remove pin with counterclockwise, twist and pull motion (Fig. 14).

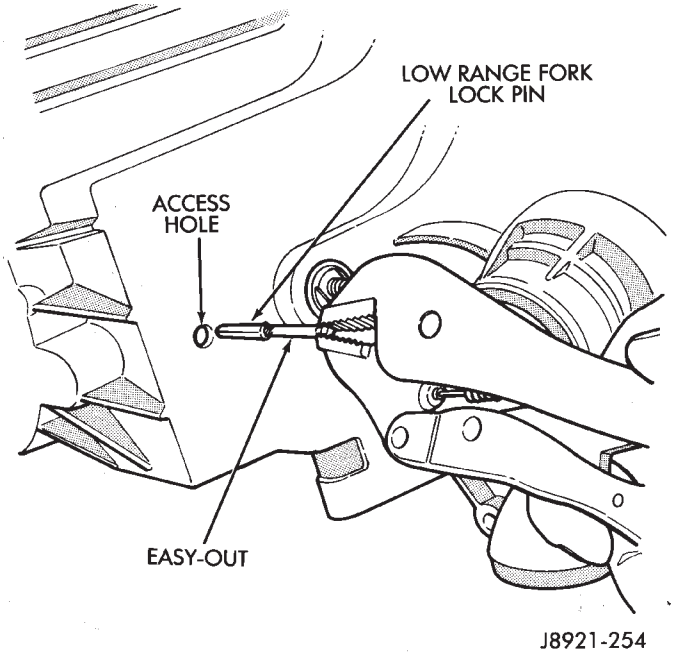

Fig. 14 Low Range Fork Lockpin Removal

(26) Remove shift rail by pulling it straight up and out of fork (Fig. 15).

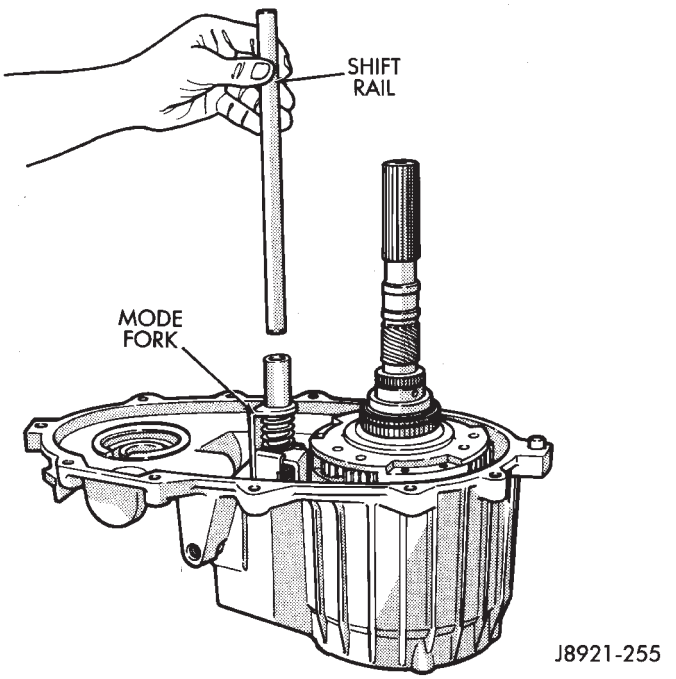

Fig. 15 Shift Rail Removal

(27) Remove mode fork and mainshaft as assembly (Fig. 16).

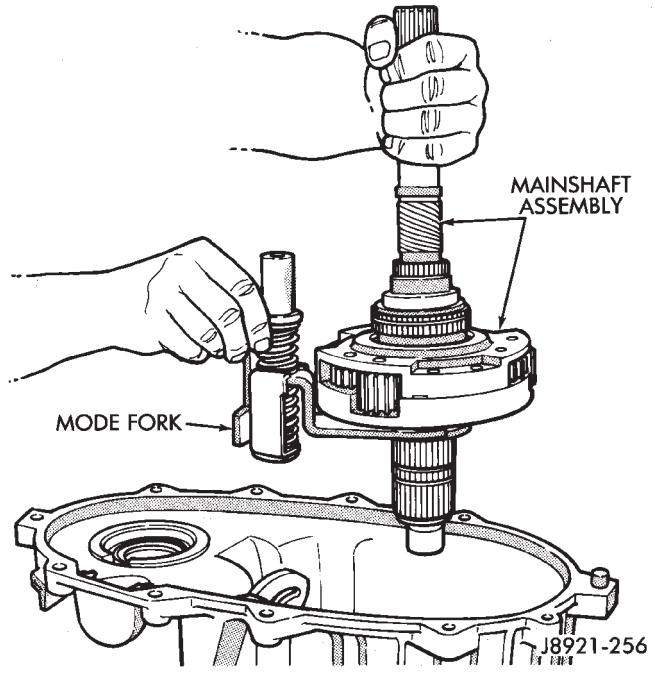

Fig. 16 Mode Fork And Mainshaft Removal

(28) Remove mode shift sleeve and mode fork assembly from mainshaft (Fig. 17). Note position of mode sleeve in fork and remove sleeve.

(29) Remove intermediate clutch shaft snap ring (Fig. 18).

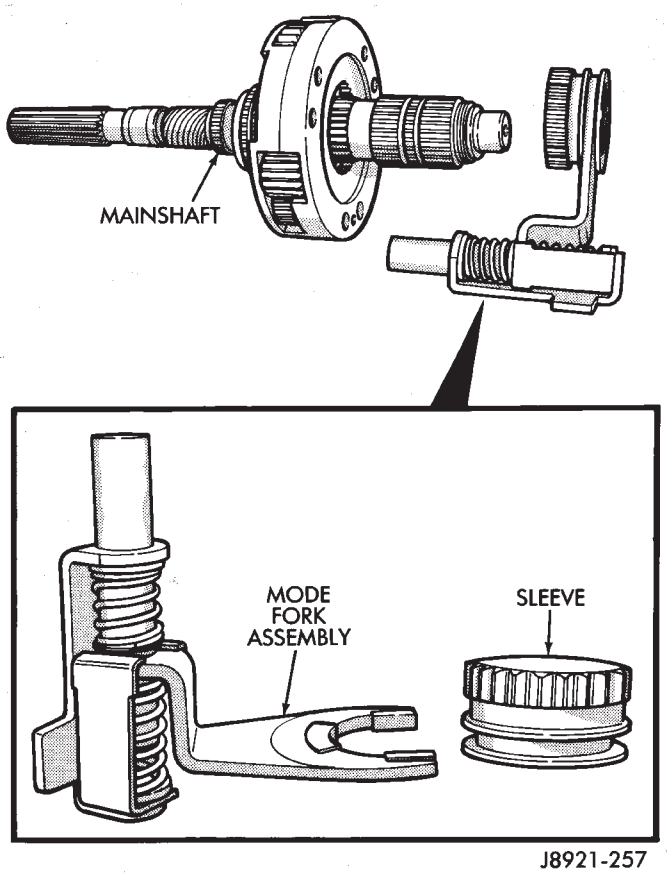

Fig. 17 Mode Fork And Sleeve Removal

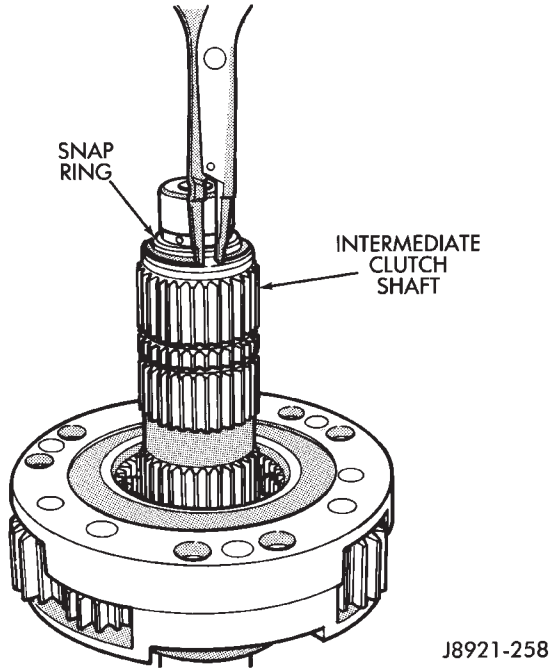

Fig. 18 Intermediate Clutch Shaft Snap Ring Removal

(30) Remove clutch shaft thrust ring (Fig. 19).

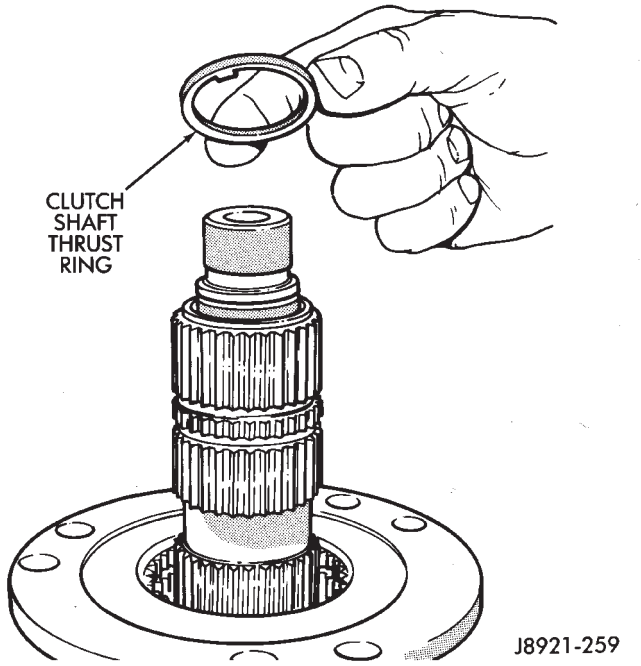

Fig. 19 Clutch Shaft Thrust Ring Removal

(31) Remove intermediate clutch shaft (Fig. 20).

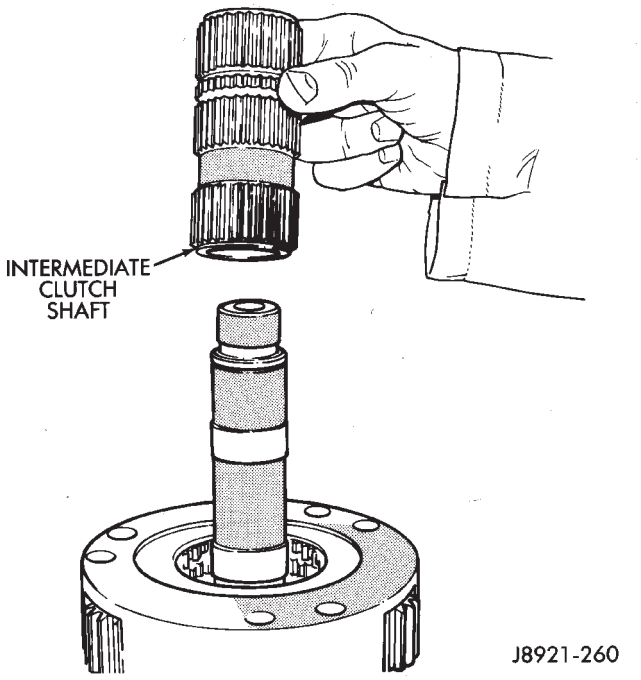

Fig. 20 Intermediate Clutch Shaft Removal

(32) Remove differential snap ring (Fig. 21).

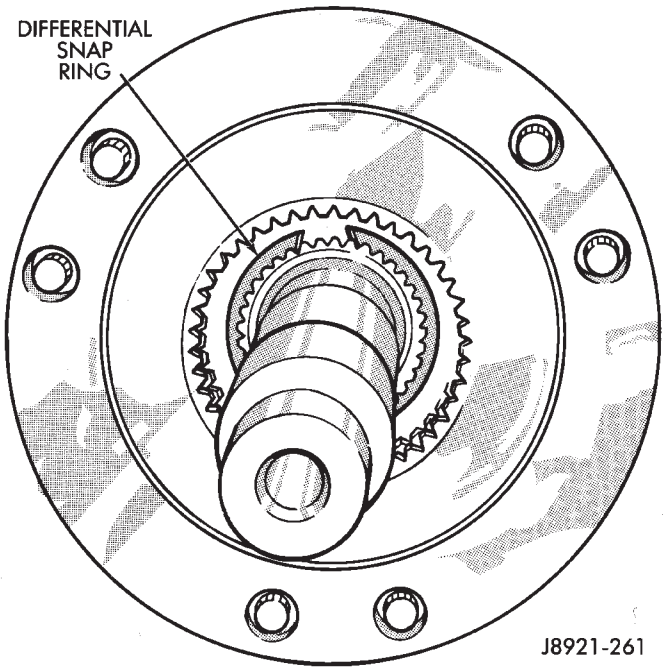

Fig. 21 Differential Snap Ring Removal

(33) Remove differential (Fig. 22).

(34) Remove differential needle bearings and both needle bearing thrust washers from mainshaft.

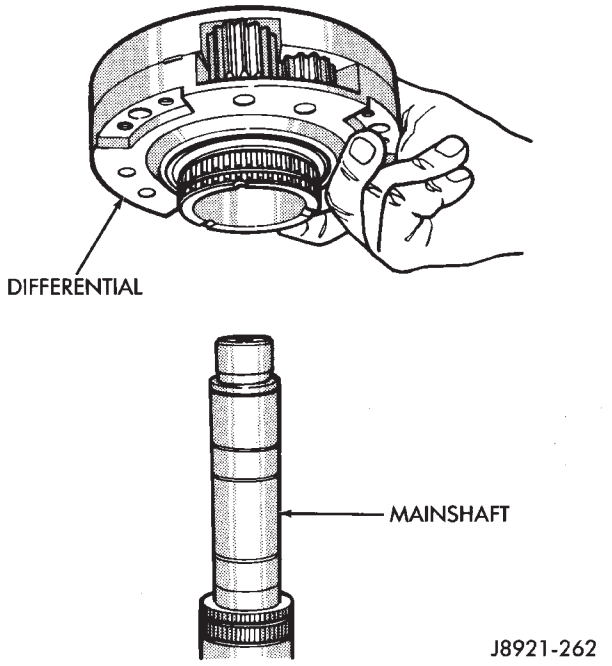

Fig. 22 Differential Removal

(35) Slide low range fork pin out of shift sector slot (Fig. 23)

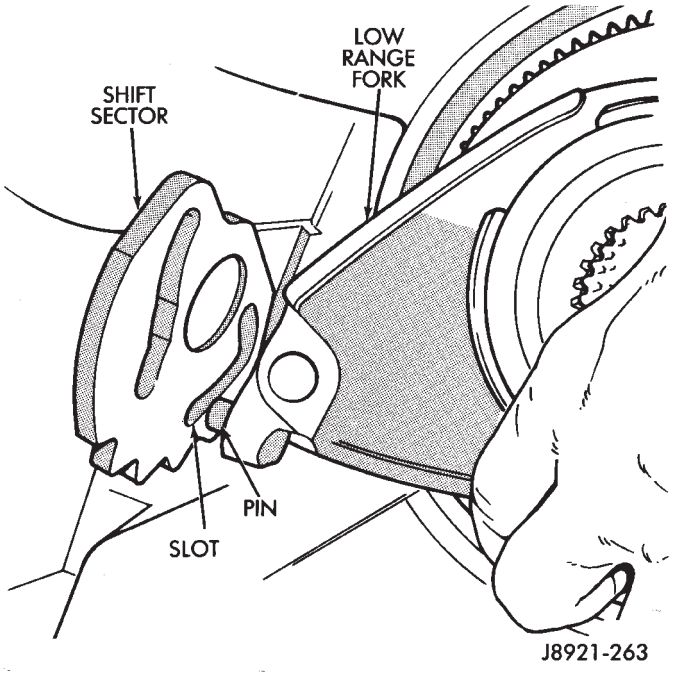

Fig. 23 Disengaging Low Range Fork

(36) Remove low range fork and hub (Fig. 24).

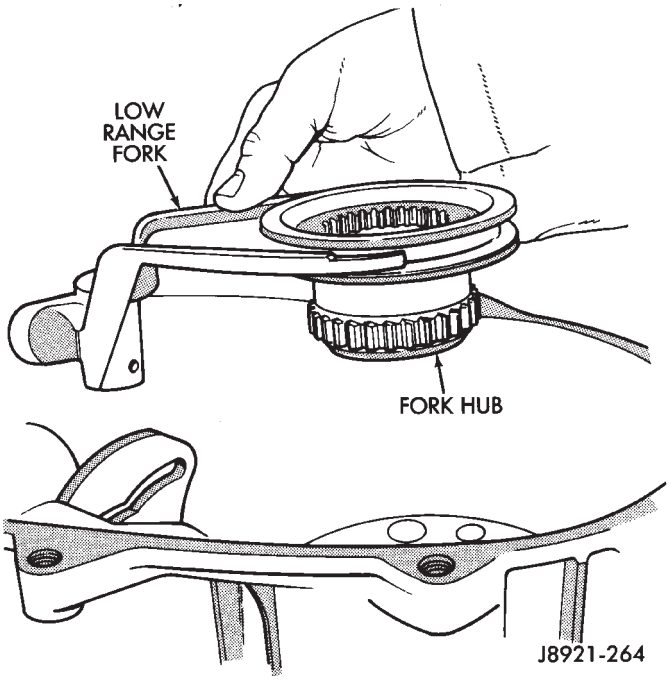

Fig. 24 Low Range Fork And Hub Removal

(37) Remove shift sector (Fig. 25).

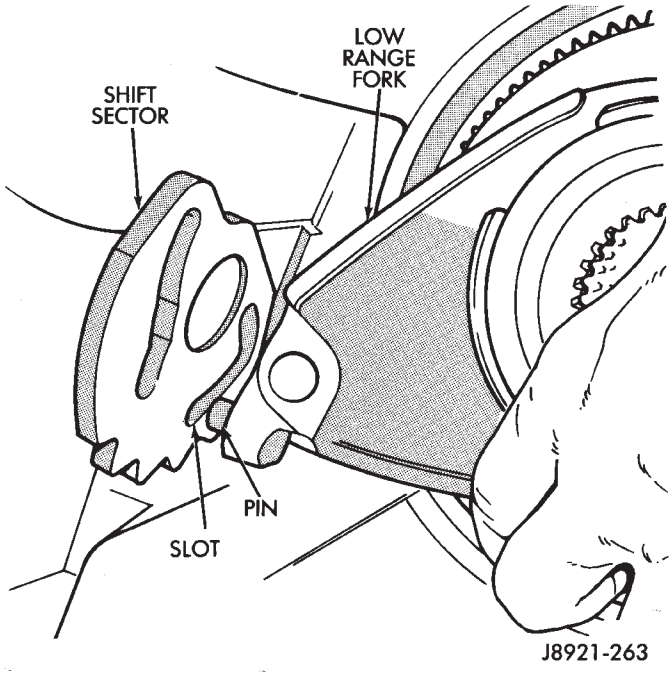

Fig. 25 Shift Sector Position

(38) Remove shift sector bushing and O-ring (Fig. 26).

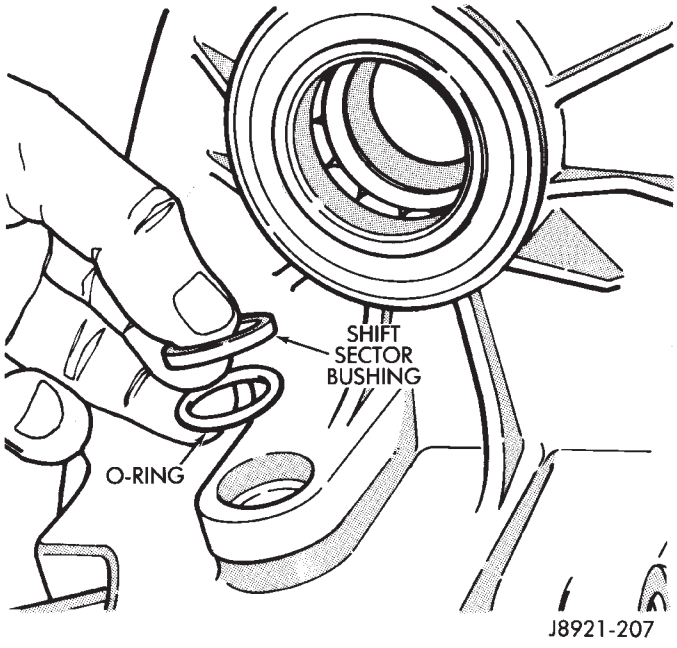

Fig. 26 Sector Bushing And O-Ring Removal

(39) Remove front bearing retainer bolts.

(40) Remove front bearing retainer. Carefully pry retainer loose with screwdriver (Fig. 27). Position screwdriver in slots cast into retainer.

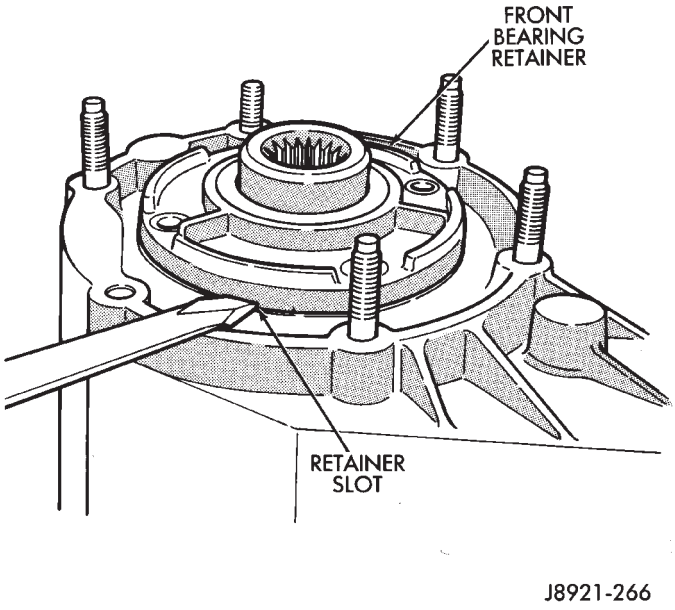

Fig. 27 Front Bearing Retainer Removal

(41) Remove input gear snap ring (Fig. 28).

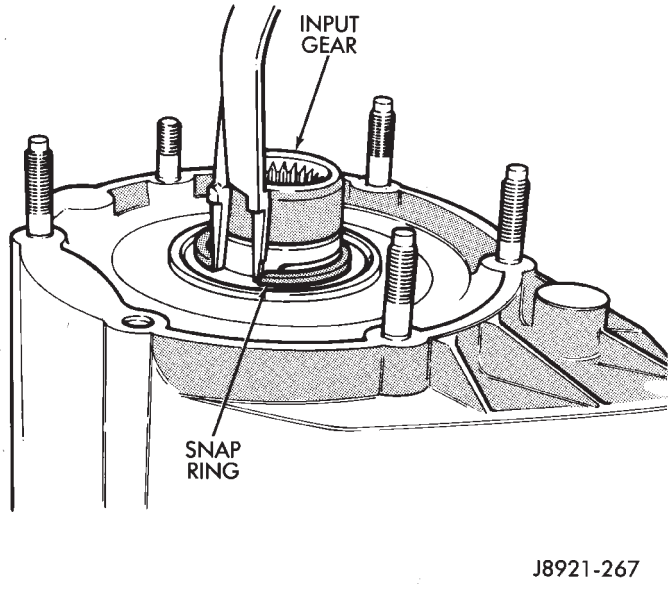

Fig. 28 Input Gear Snap Ring Removal

(42) Remove input/low range gear assembly from bearing with Tool Handle C-4171 and Tool 7829A (Fig. 29).

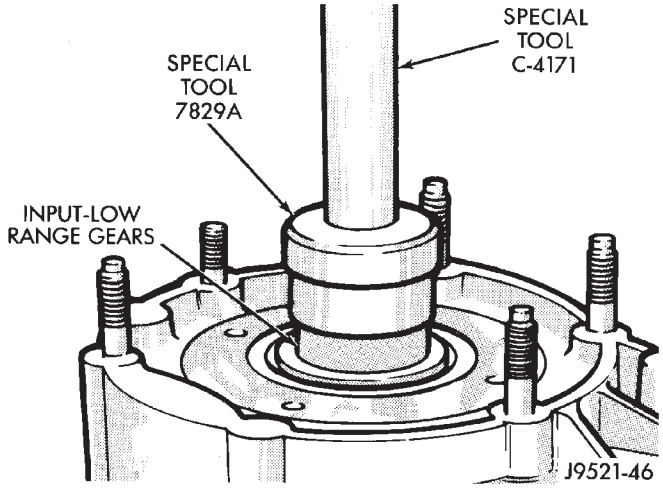

Fig. 29 Input And Low Range Gear Assembly Removal

(43) Remove low range gear snap ring (Fig. 30).

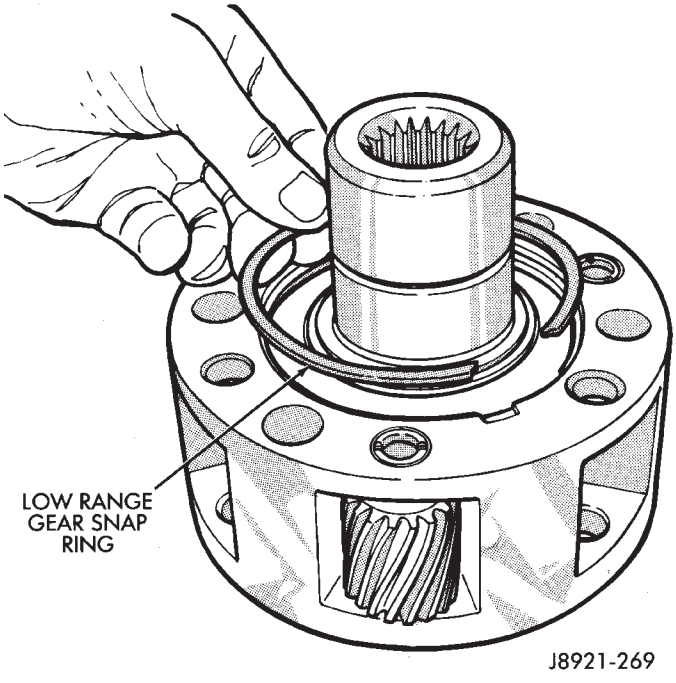

Fig. 30 Low Range Gear Snap Ring Removal/ Installation

(44) Remove input gear retainer, thrust washers and input gear from low range gear (Fig. 31).

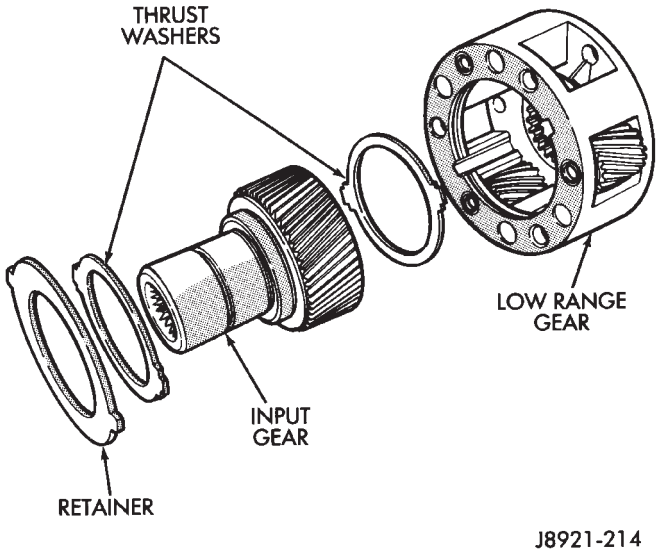

Fig. 31 Low Range Gear Disassembly

(45) Inspect low range annulus gear (Fig. 32). **Gear is not a serviceable component. If damaged, replace gear and front case as assembly.**

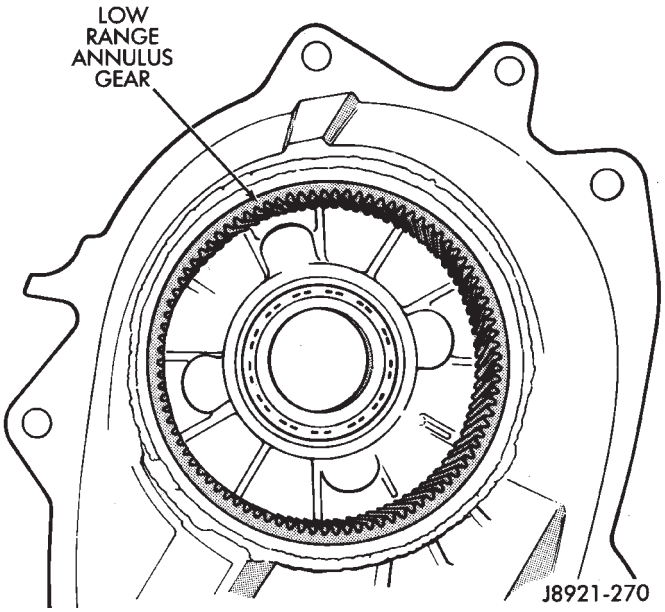

Fig. 32 Inspecting Low Range Annulus Gear

(46) Remove oil seals from following components:
- rear retainer
- extension housing
- oil pump
- case halves

(47) Mark differential case halves for reference.

(48) Remove differential case bolts and separate top case from bottom case. Use slots in case halves to pry them apart (Fig. 33).

(49) Remove thrust washers and planet gears from case pins (Fig. 34).

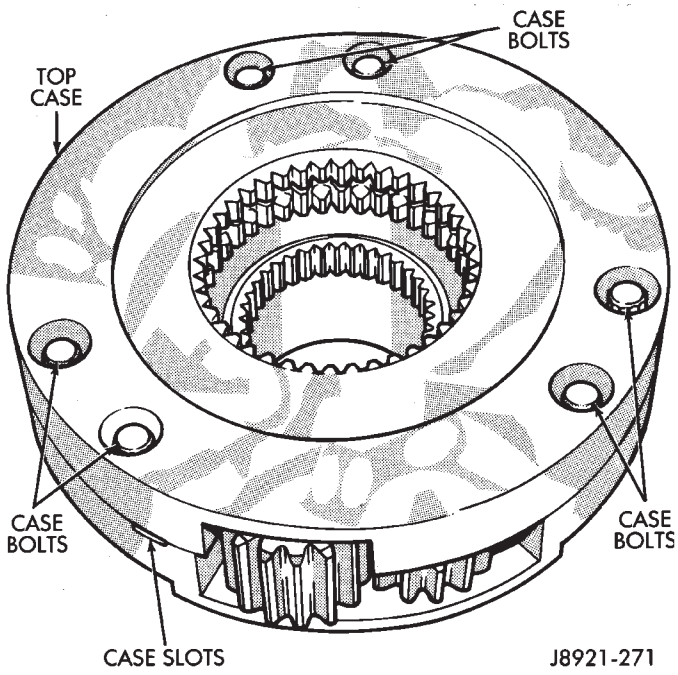

Fig. 33 Separating Differential Case Halves

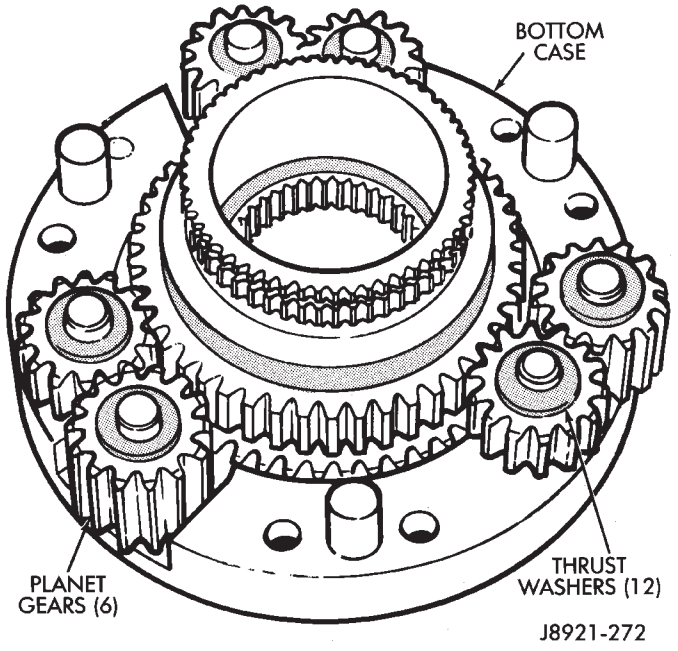

Fig. 34 Planet Gears And Thrust Washer Removal

(50) Remove mainshaft and sprocket gears from bottom case (Fig. 35). Note gear position for reference before separating them.

OVERHAUL CLEANING AND INSPECTION

Clean the transfer case components thoroughly with solvent. Remove all traces of sealer from the case and retainer seal surfaces.

Clean the oil pickup screen with solvent and allow it to air dry. Use compressed air to remove solvent residue from all oil feed passages and channels in case halves.

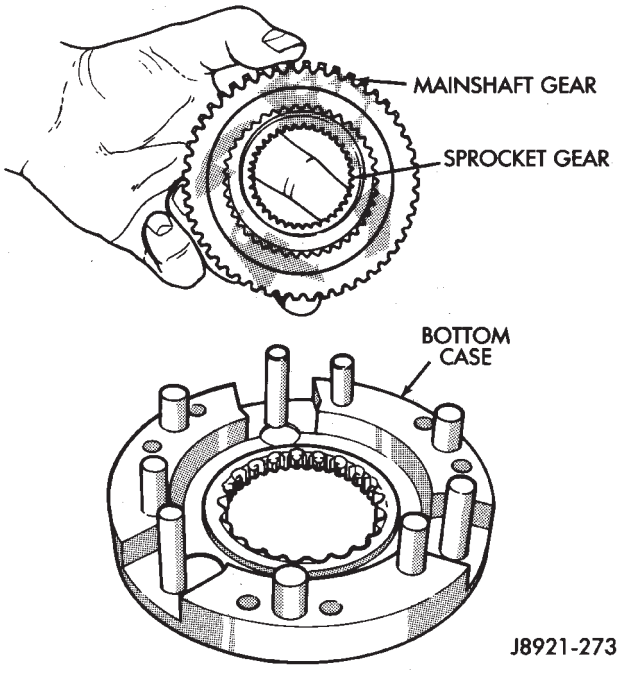

Fig. 35 Mainshaft And Sprocket Gear Removal

Inspect the differential gears, thrust washers and case halves. Replace the mainshaft gear if the gear teeth or the brass ring on the underside of the gear are damaged. Replace the differential as an assembly if the gears, case halves, or the pins in the lower case half are damaged.

Inspect the case halves, extension housing and retainers for cracks, porosity, or damaged sealing surfaces. Inspect the shafts, gears, chain and shift components for wear or damage.

Inspect all of the transfer case bearings for wear, roughness, pitting, or galling. Replace worn or damaged bearings as outlined in the assembly section.

TRANSFER CASE ASSEMBLY

(1) Lubricate transfer case components with automatic transmission fluid or petroleum jelly (where indicated) during assembly.

CAUTION: The bearing bores in various transfer case components contain oil feed holes. Be sure replacement bearings do not block these feed holes.

(2) Remove snap ring that retains front output shaft front bearing in case (Fig. 36). Then remove bearing. Use hammer handle, or hammer and brass punch to tap bearing out of case.

(3) Install new front output shaft bearing with Tool Handle C-4171 and Installer 8033A (Fig. 37).

(4) Install front bearing snap ring (Fig. 36).

(5) Install new front output shaft oil seal as follows:

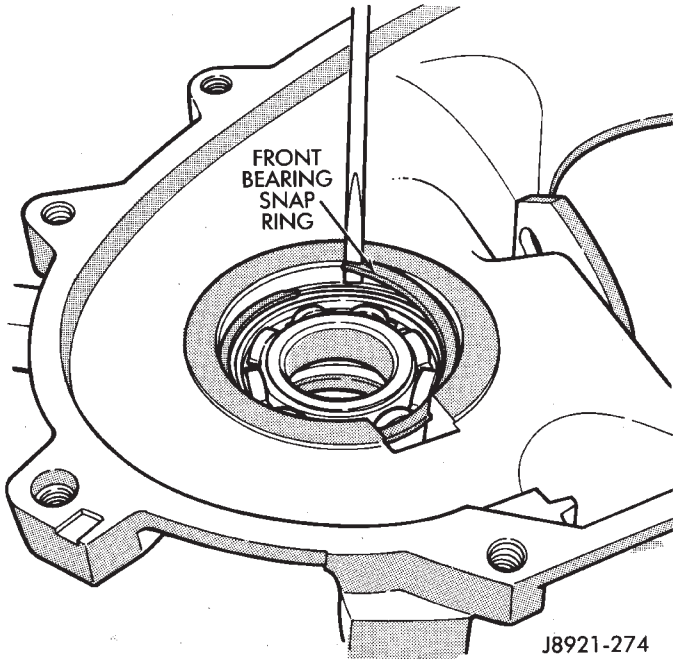

Fig. 36 Front Output Shaft Front Bearing Snap Ring Removal

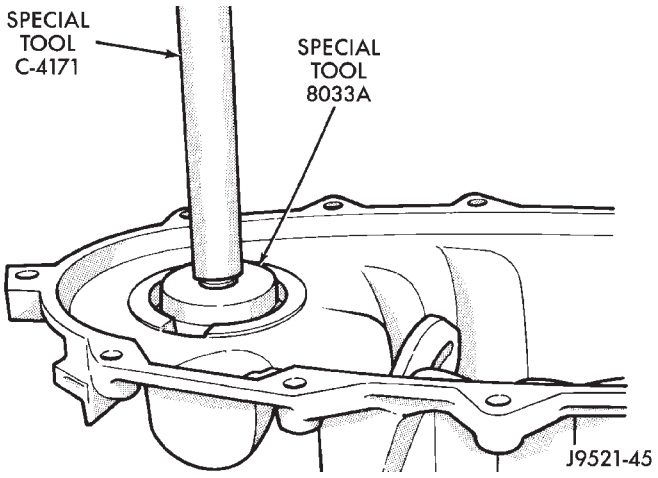

Fig. 37 Front Output Shaft Front Bearing Installation

(a) Tap seal into bore until flush with upper edge of case bore. Use suitable size installer tool to start seal into place (Fig. 38).

(b) Seat seal 2.03 to 2.5 mm (0.080 to 0.100 in.) **below** top edge of seal bore in front case (Fig. 39). This is correct final seal position. Use suitable size installer tool or blunt punch to final-seat seal. Check seal depth with a dial caliper or depth micrometer.

CAUTION: Be sure the front output seal is seated below the top edge of the case bore as shown (Fig. 39). The seal could work loose if not seated to the recommended depth.

(6) Remove input gear bearing with Tool Handle C-4171 and Remover C-4210 (Fig. 40).

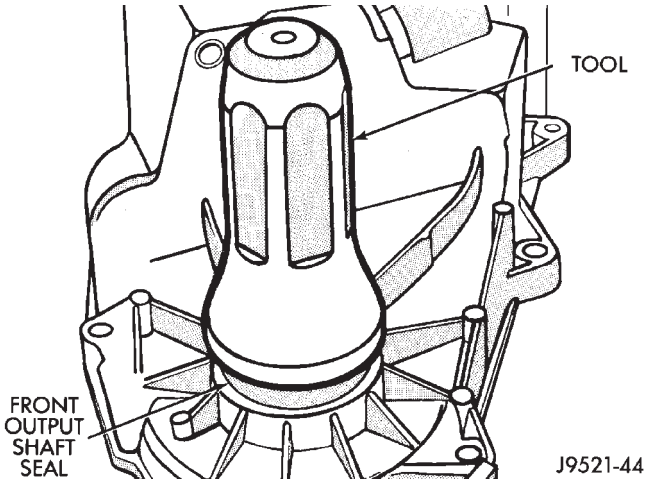

Fig. 38 Starting Front Output Shaft Seal Into Case Bore

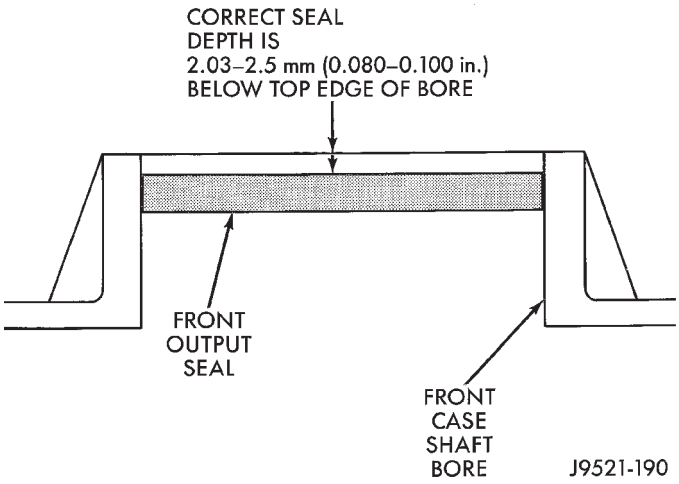

Fig. 39 Front Output Seal Installation Depth

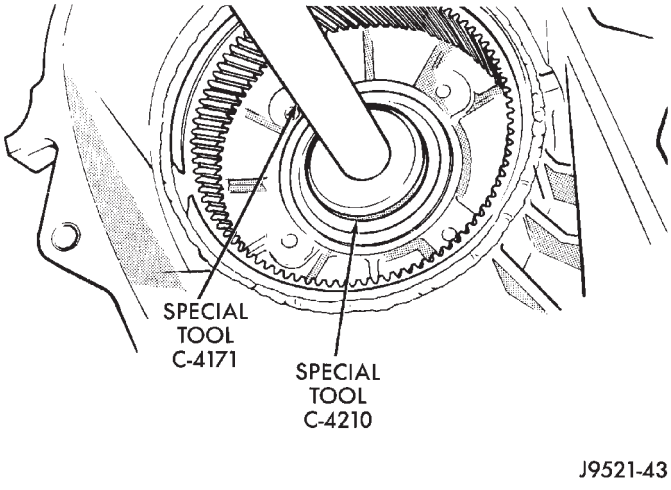

Fig. 40 Input Gear Bearing Removal

(7) Install snap ring on new input gear bearing.

(8) Install new input gear bearing with shop press and wood block. Install bearing far enough to seat snap ring against case (Fig. 41).

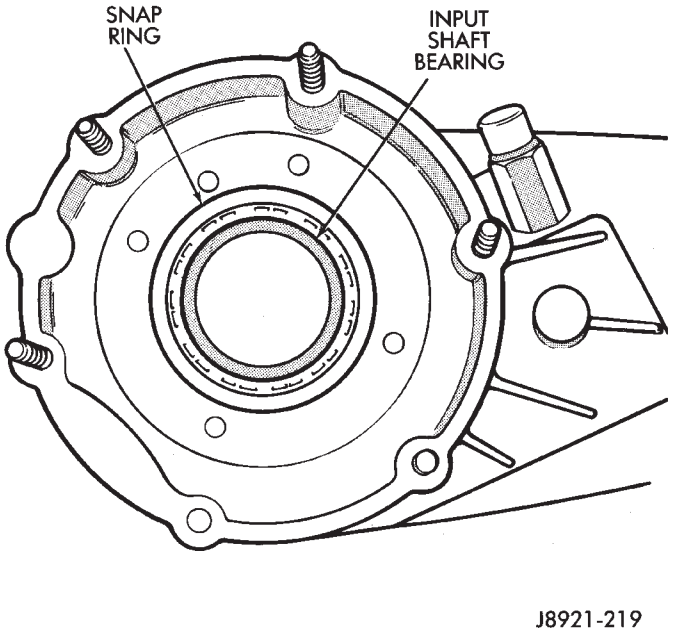

Fig. 41 Seating Input Gear Bearing

(9) Remove input gear pilot bearing with slide hammer and internal puller (Fig. 42).

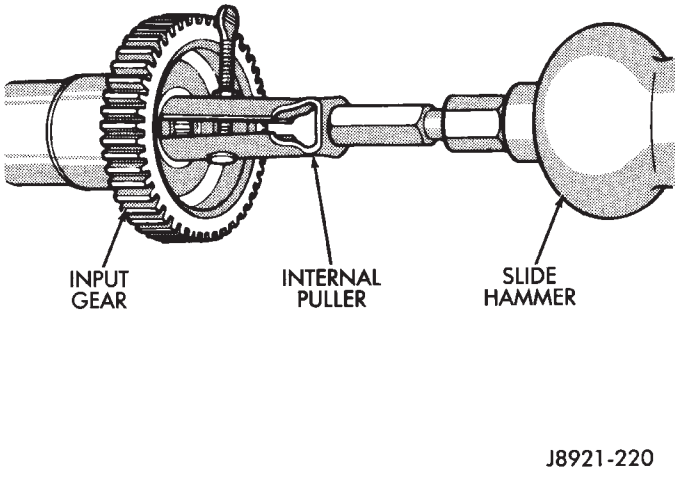

Fig. 42 Input Gear Pilot Bearing Removal

(10) Install new pilot bearing with Tool Handle C-4171 and Installer 5065 (Fig. 43).

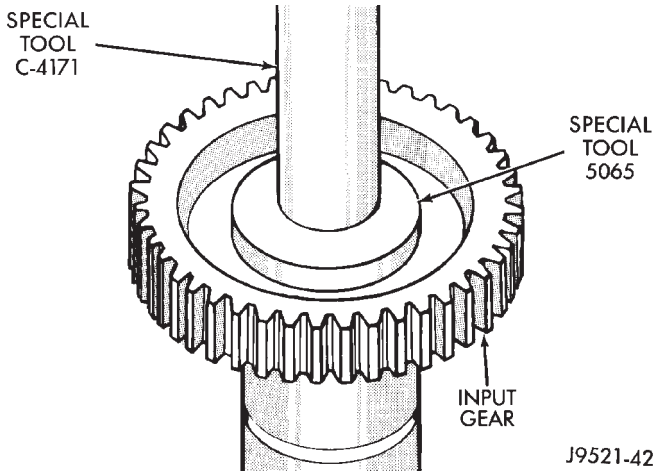

Fig. 43 Input Gear Pilot Bearing Installation

(11) Assemble low range gear, input gear thrust washers, input gear and input gear retainer (Fig. 44).

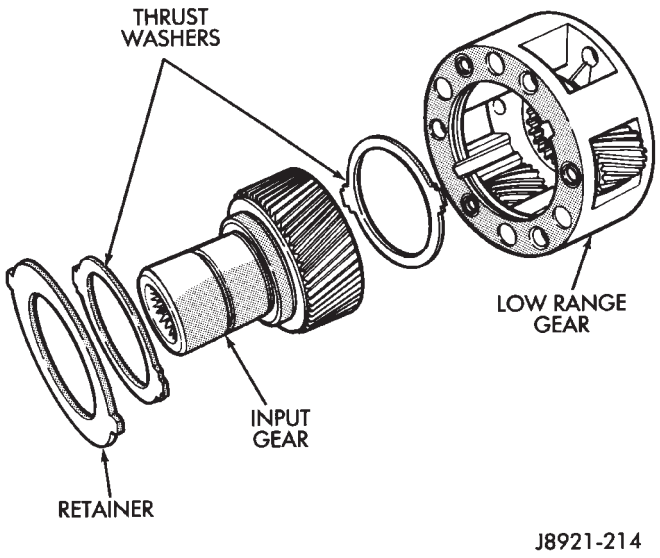

Fig. 44 Low Range And Input Gear Assembly

(12) Install low range gear snap ring (Fig. 45).

(13) Lubricate input gear and low range gears with automatic transmission fluid.

(14) Start input gear shaft into front case bearing.

(15) Press input gear shaft into front bearing.

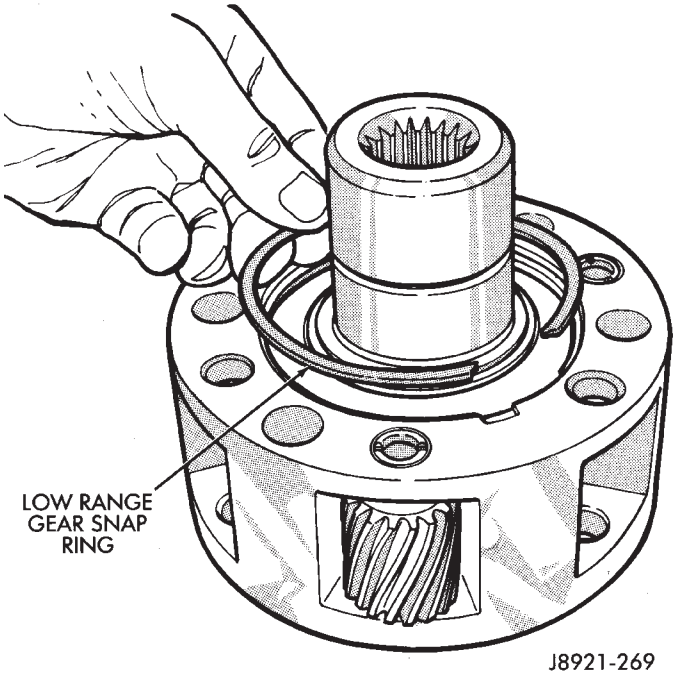

Fig. 45 Install Low Range Gear Snap Ring

CAUTION: Be sure the input gear installer tool is the proper size. The wrong size tool could push the input gear pilot bearing too far into the gear bore (Fig. 46). Also, do not press against the end surfaces of the low range gear. The gear case and thrust washers could be damaged.

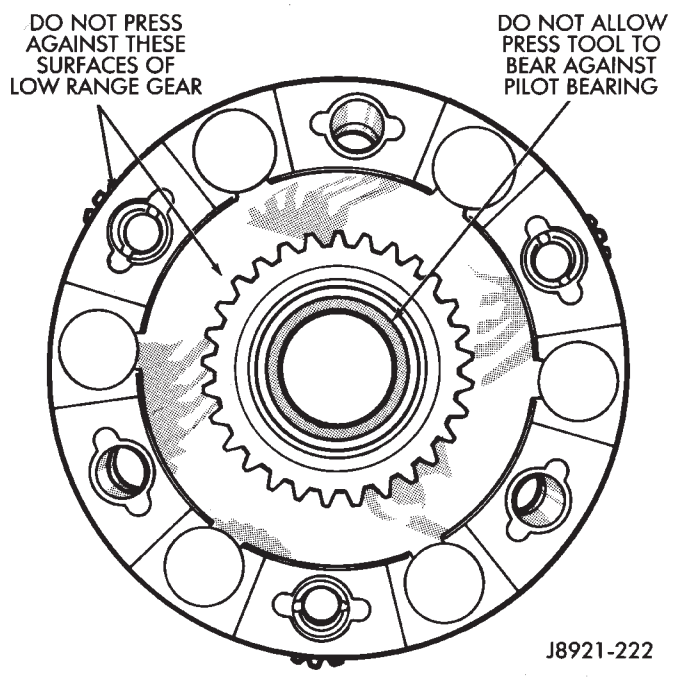

Fig. 46 Input Gear Installation

(16) Install new input gear snap ring (Fig. 47).

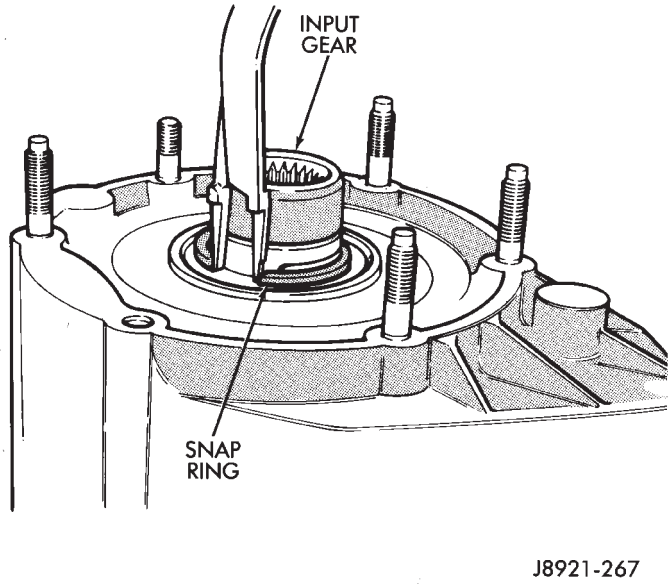

Fig. 47 Input Gear Snap Ring Installation

(17) Install new seal in front bearing retainer with Tool Handle C-4171 and Installer 7884 (Fig. 48).

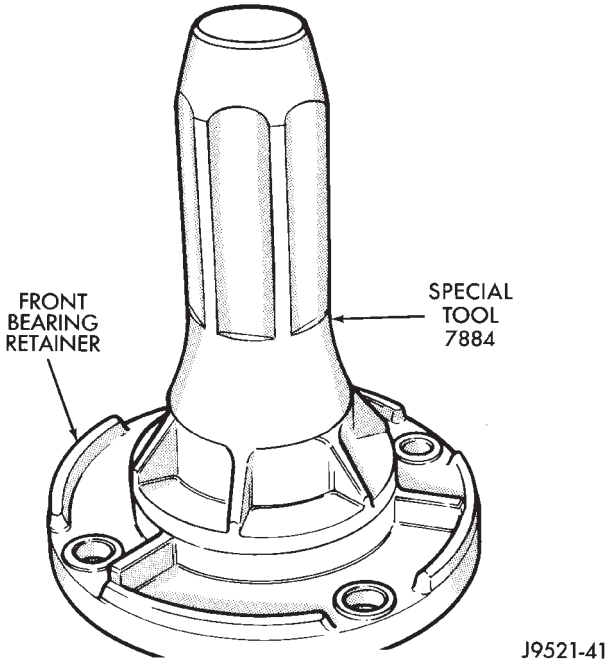

Fig. 48 Front Bearing Retainer Seal Installation

(18) Apply 3 mm (1/8 in.) wide bead of Mopar gasket maker. silicone adhesive sealer, or Loctite 518 to seal surface of front bearing retainer.

(19) Install front bearing retainer (Fig. 49). Tighten retainer bolts to 16 ft. lbs. (21 N·m) torque.

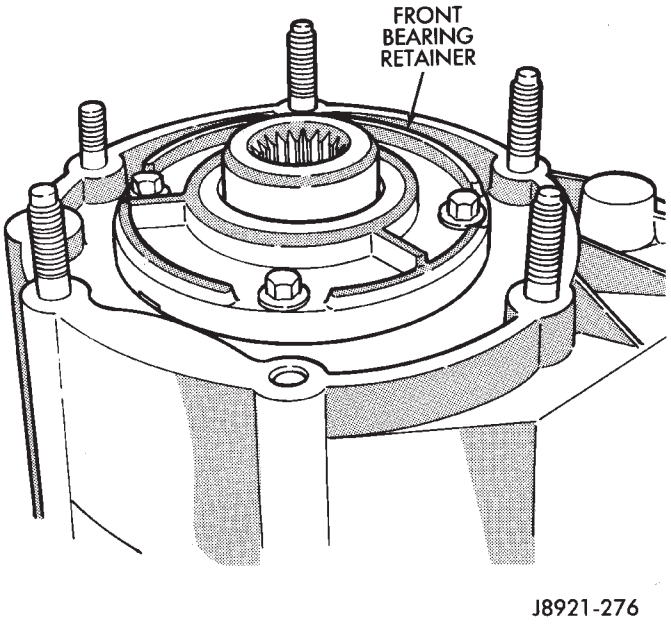

Fig. 49 Installing Front Bearing Retainer

(20) Install new sector shaft O-ring and bushing (Fig. 50).

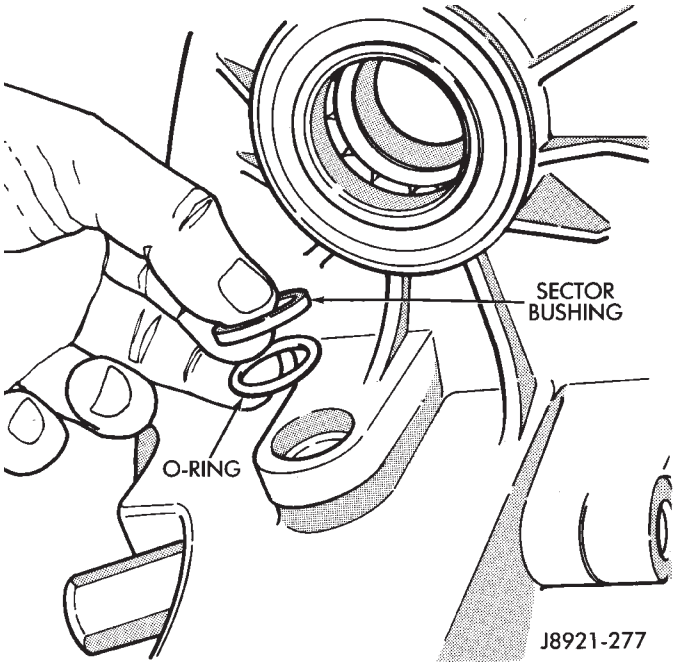

Fig. 50 Sector O-Ring And Bushing Installation

(21) Install shift sector.

(22) Install new pads in low range fork (Fig. 51).
(23) Assemble low range fork and hub (Fig. 51).

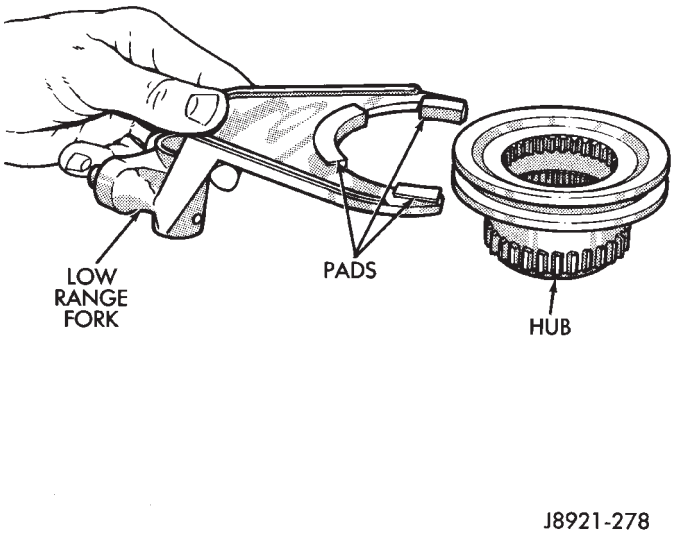

Fig. 51 Assembling Low Range Fork And Hub

(24) Position low range fork and hub in case. Be sure low range fork pin is engaged in shift sector slot (Fig. 52).

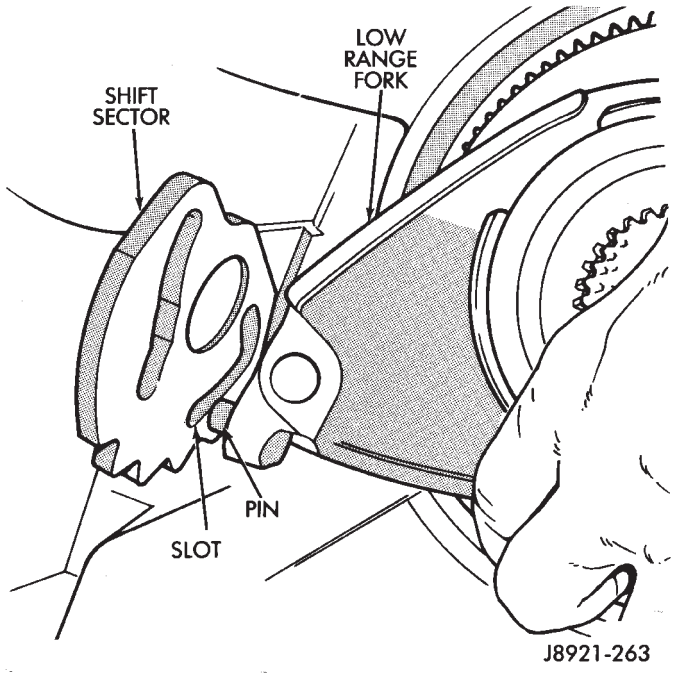

Fig. 52 Positioning Low Range Fork

(25) Lubricate differential components with automatic transmission fluid.

(26) Install sprocket gear in differential bottom case (Fig. 53).

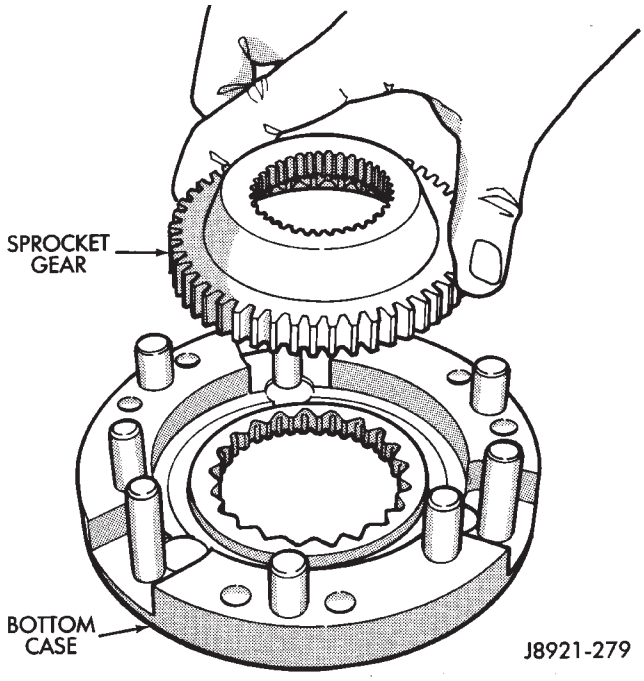

Fig. 53 Installing Differential Sprocket Gear

(27) Install differential planet gears and new thrust washers (Fig. 54). **Be sure thrust washers are installed at top and bottom of each planet gear.**
(28) Install differential mainshaft gear (Fig. 54).

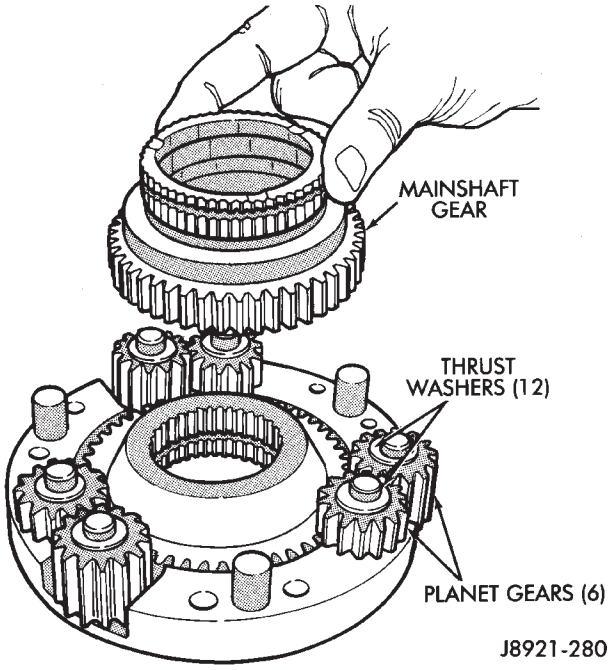

Fig. 54 Installing Mainshaft And Planet Gears

(29) Align and position differential top case on bottom case (Fig. 55). Align using scribe marks made at disassembly.

(30) Install and tighten differential case bolts to specified torque.

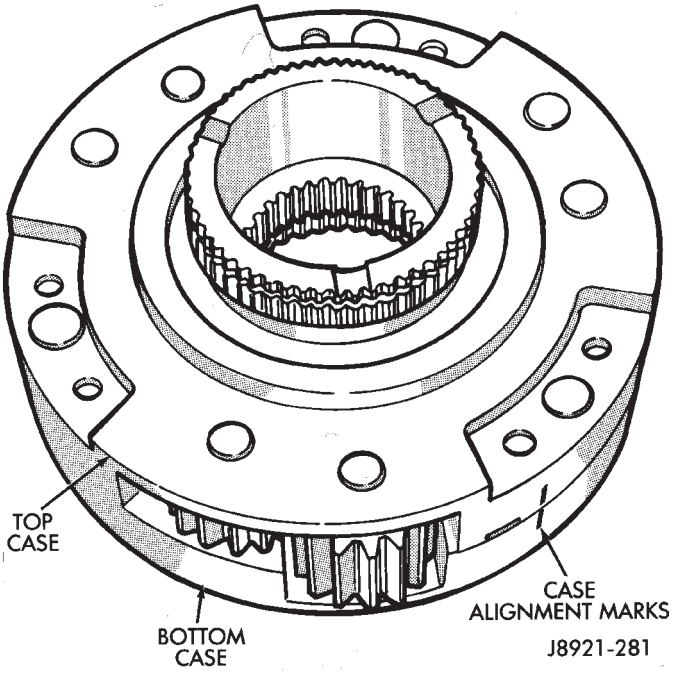

Fig. 55 Differential Case Assembly

(31) Install first mainshaft bearing spacer on mainshaft (Fig. 56).

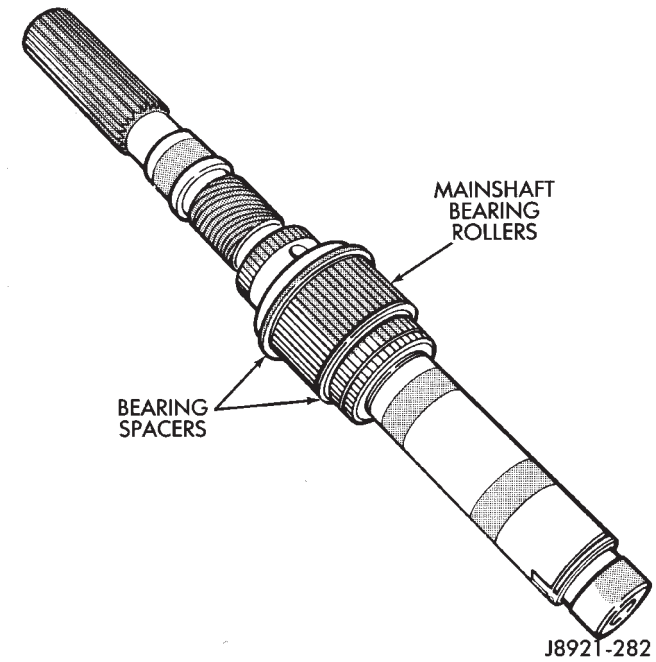

Fig. 56 Installing Mainshaft Bearing Rollers and Spacers

(32) Install bearing rollers on mainshaft (Fig. 56). **Coat bearing rollers with generous quantity of petroleum jelly to hold them in place.**

(33) Install remaining bearing spacer on mainshaft (Fig. 56). Do not displace any bearings while installing spacer.

(34) Install differential (Fig. 57). **Do not displace mainshaft bearings when installing differential.**

(35) Install differential snap ring (Fig. 58).

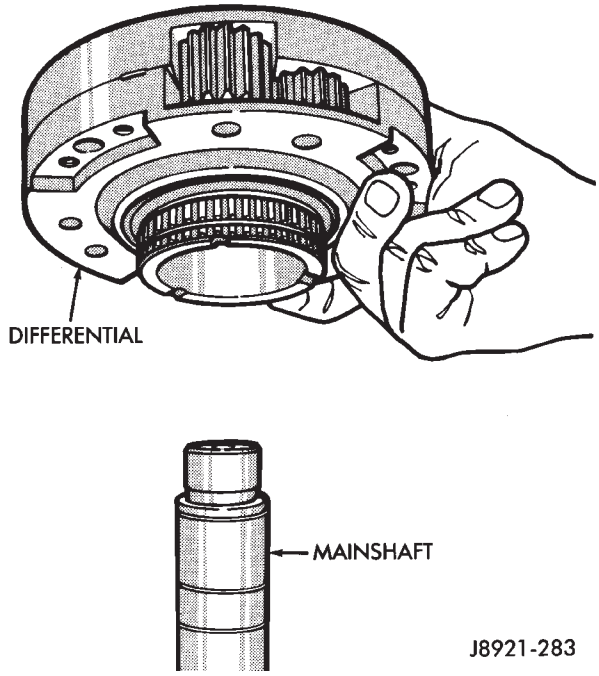

Fig. 57 Differential Installation

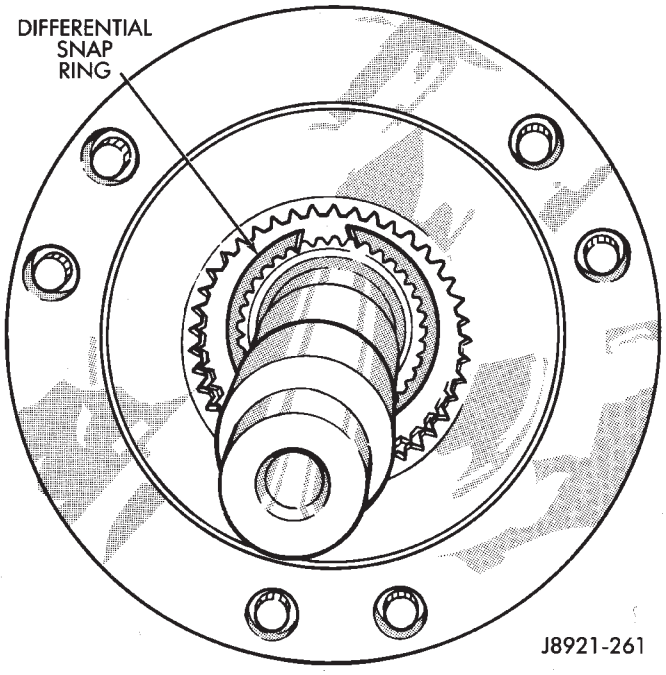

Fig. 58 Installing Differential Snap Ring

(36) Install intermediate clutch shaft (Fig. 59).

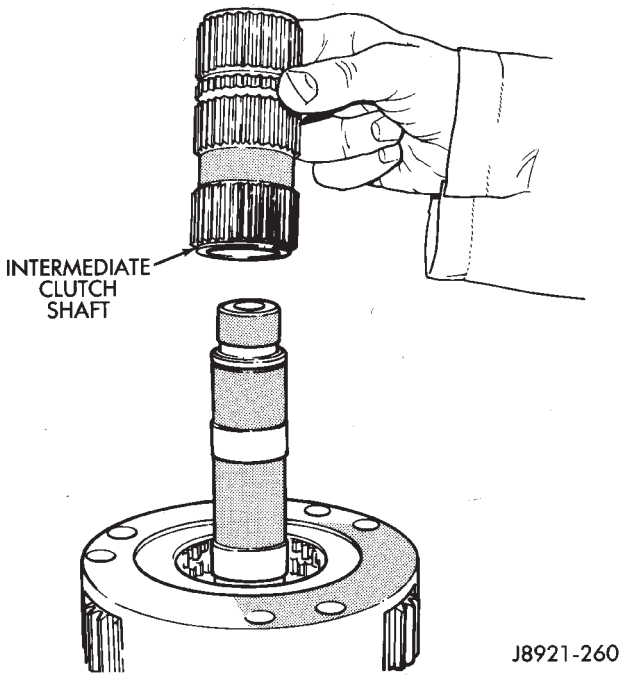

Fig. 59 Installing Intermediate Clutch Shaft

(37) Install clutch shaft thrust washer (Fig. 60).

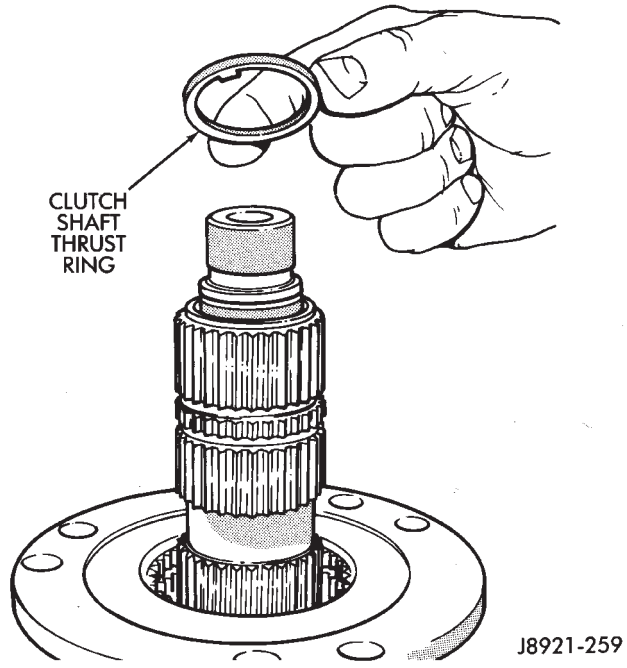

Fig. 60 Installing Clutch Shaft Thrust Washer

(38) Install clutch shaft snap ring (Fig. 61).

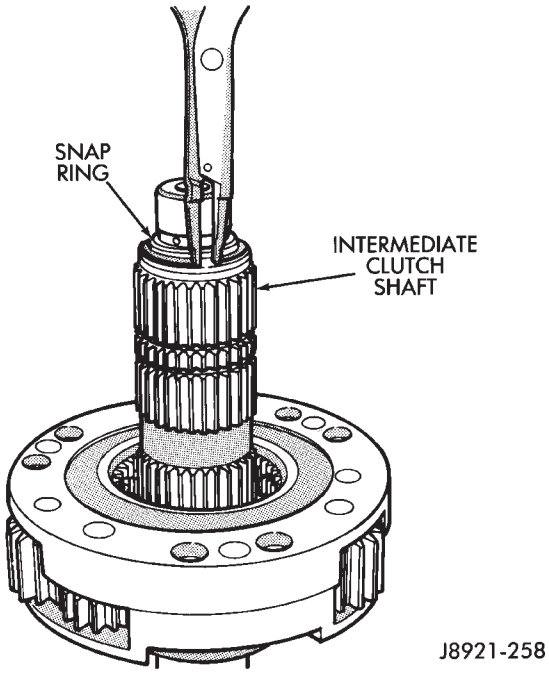

Fig. 61 Installing Clutch Shaft Snap Ring

(39) Inspect mode fork assembly (Fig. 62). Replace pads and bushing if necessary. Replace fork tube if bushings inside tube are worn or damaged. Also check springs and slider bracket (Fig. 62). Replace worn, damaged components.

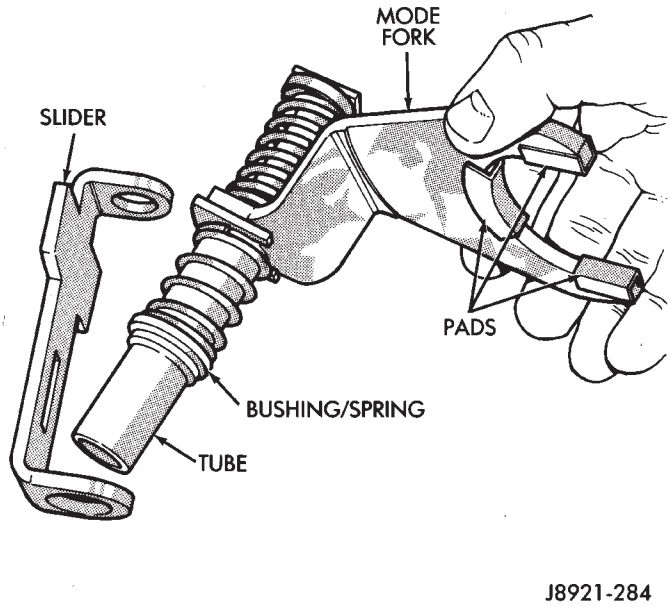

Fig. 62 Mode Fork Assembly Inspection

(40) Install mode sleeve in mode fork (Fig. 63). Then install assembled sleeve and fork on mainshaft. Be sure mode sleeve splines are engaged in differential splines.

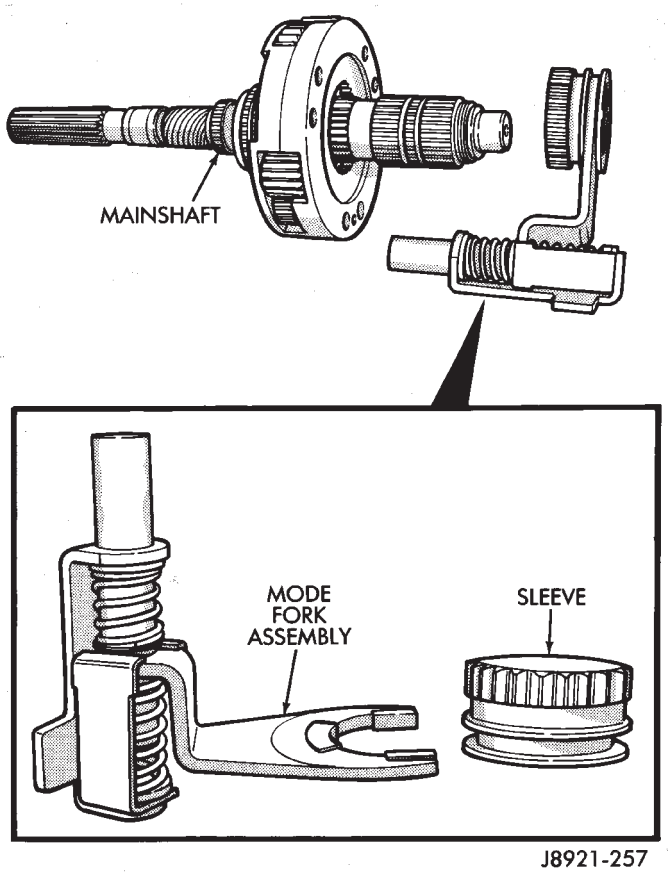

Fig. 63 Installing Mode Fork And Sleeve

(41) Install mode fork and mainshaft assembly in case (Fig. 64). Rotate mainshaft slightly to engage shaft with low range gears.

(42) Rotate mode fork pin into shift sector slot.

(43) Install shift rail (Fig. 65). **Be sure rail is seated in both shift forks.**

(44) Rotate shift sector to align lockpin hole in low range fork with access hole in case.

(45) Insert an easy-out in range fork lockpin to hold it securely for installation (Fig. 66). **Lockpin is slightly tapered on one end. Insert tapered end into fork and rail.**

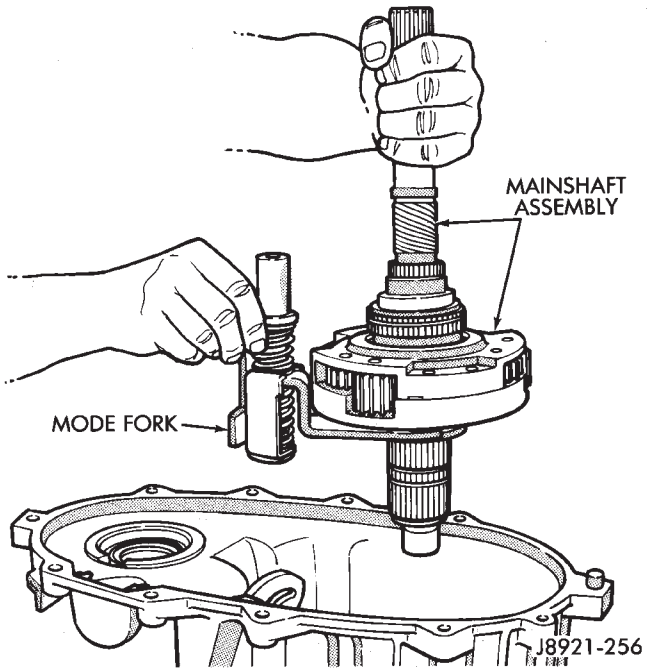

Fig. 64 Assembled Mainshaft And Mode Fork Installation

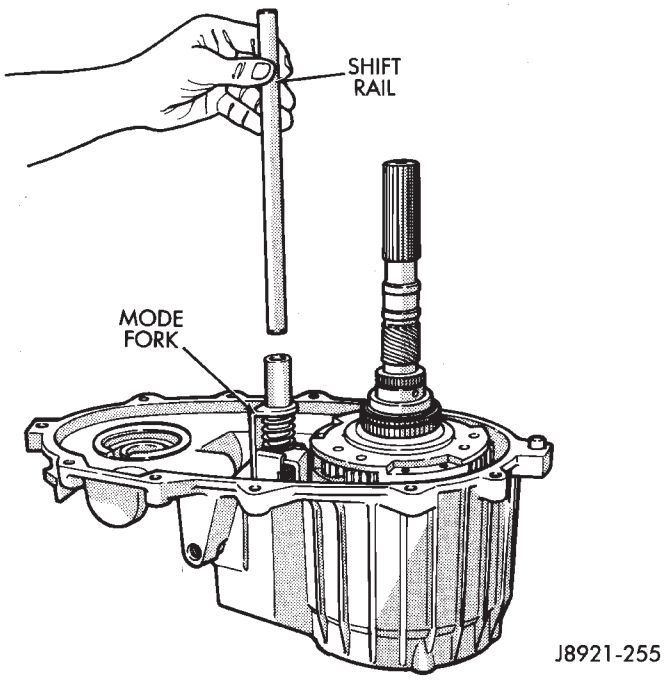

Fig. 65 Shift Rail Installation

(46) Insert lockpin through access hole and into shift fork (Fig. 66). Then remove easy-out and seat the pin with pin punch.

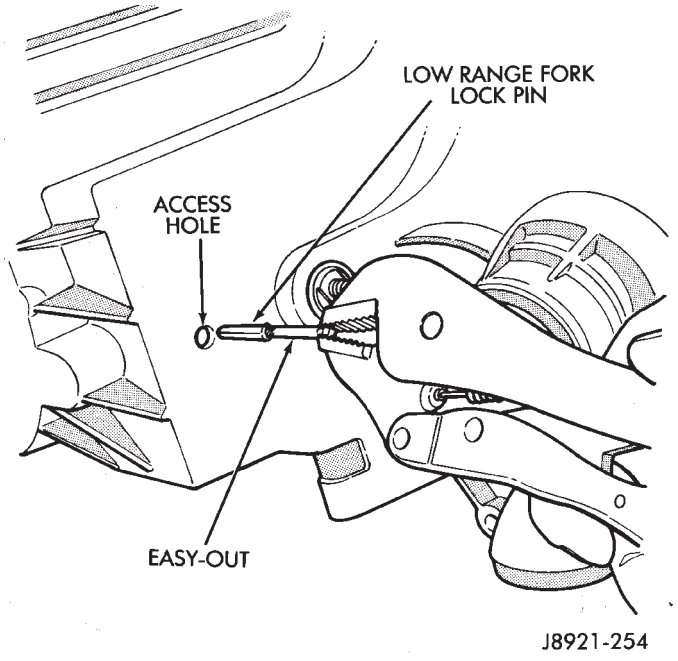

Fig. 66 Installing Low Range Fork Lockpin

(47) Install plug in lockpin access hole.

(48) Install transfer case shift lever and attaching nut. Tighten nut to 30 N·m (22 ft. lbs.) torque.

(49) Install detent plunger, detent spring and detent plug in case (Fig. 67).

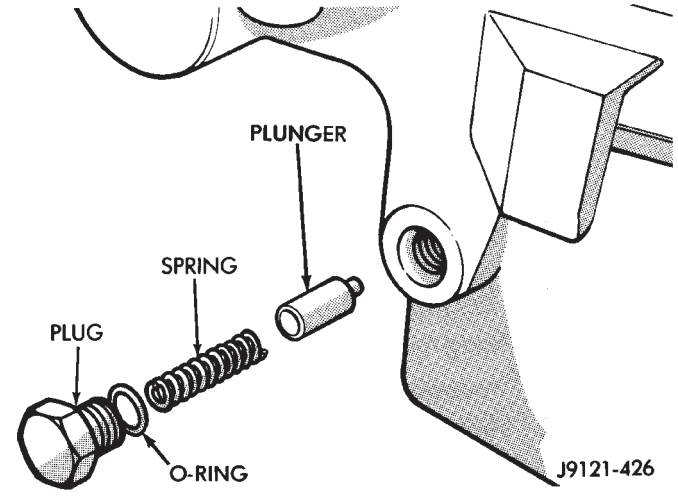

Fig. 67 Detent Pin, Spring And Plug Installation

(50) Install front output shaft (Fig. 68).

(51) Install drive chain (Fig. 68). Engage chain with front output shaft sprocket teeth.

(52) Install drive sprocket (Fig. 68).

(53) Engage drive sprocket teeth with chain. Then engage sprocket splines with mainshaft splines.

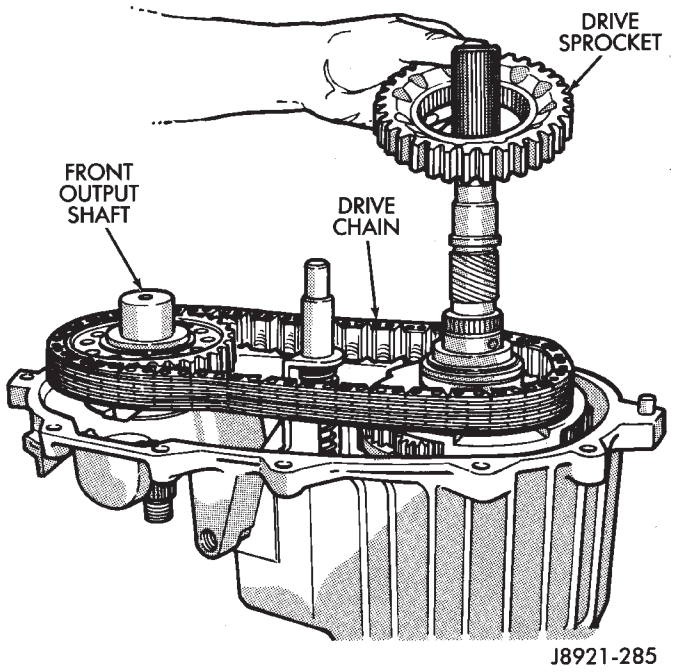

Fig. 68 Drive Chain And Sprocket Installation

(54) Install drive sprocket snap ring (Fig. 69).

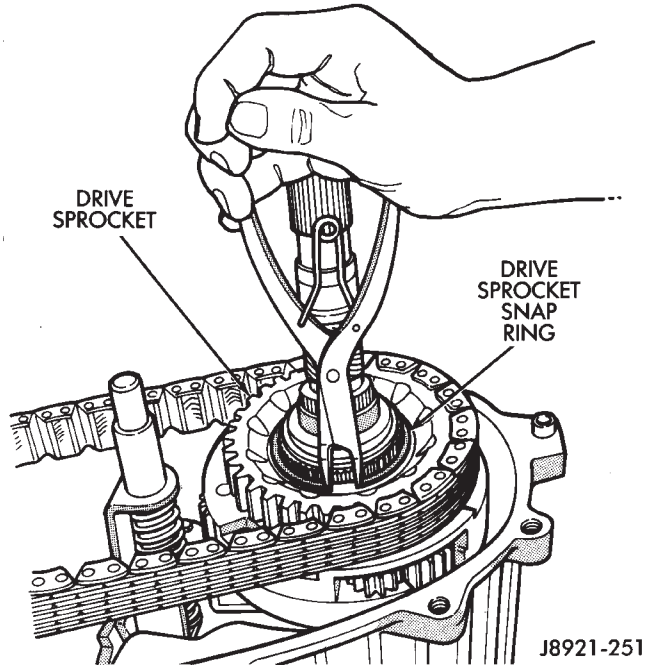

Fig. 69 Drive Sprocket Snap Ring Installation

(55) Replace front output shaft rear bearing (Fig. 70). Remove bearing with internal puller and slide hammer. Install new bearing with Tool Handle C-4171 and Installer 5066. Lubricate bearing after installation.

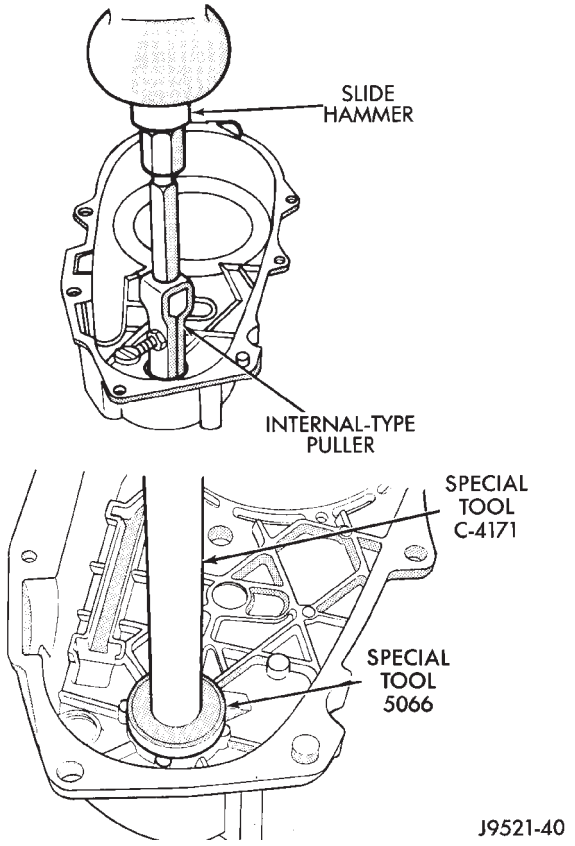

Fig. 70 Front Output Shaft Rear Bearing Installation

(56) Install new seal in oil pump feed housing with Special Tool 7888 (Fig. 71).

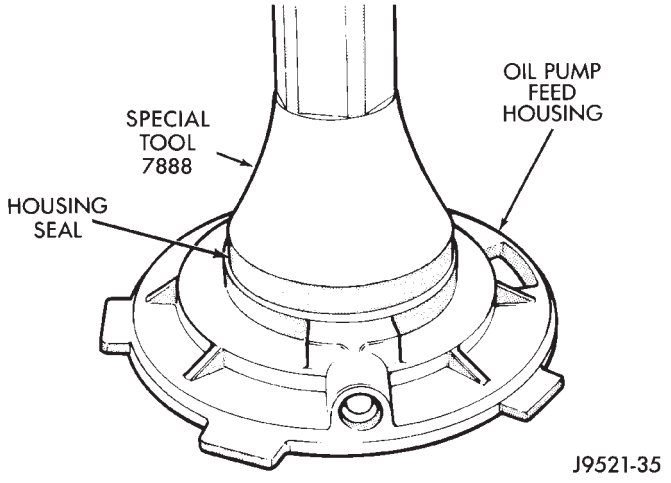

Fig. 71 Oil Pump Seal Installation

(57) Install new pickup tube O-ring in oil pump (Fig. 72).

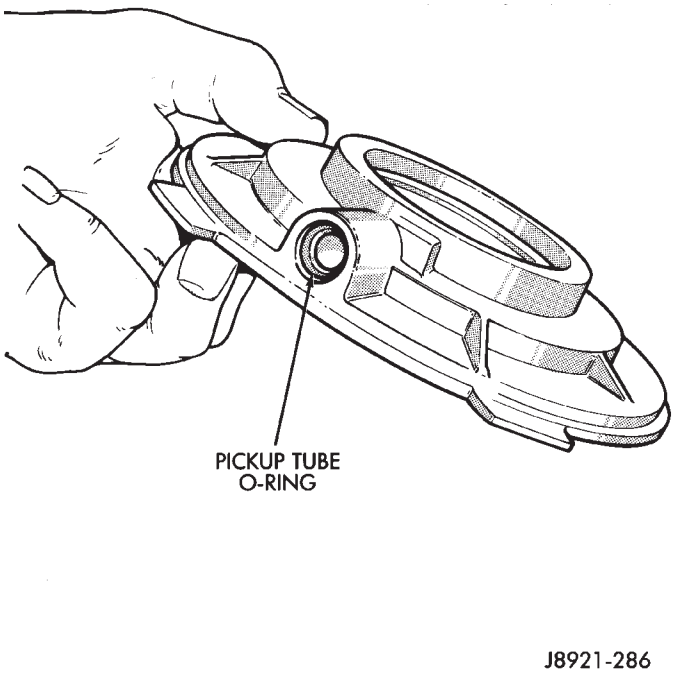

Fig. 72 Pickup Tube O-Ring Installation

(58) Insert oil pickup tube in oil pump and attach oil screen and connecter hose to pickup tube. Then install assembled pump, tube and screen in rear case (Fig. 73). Be sure screen is seated in case slot as shown.

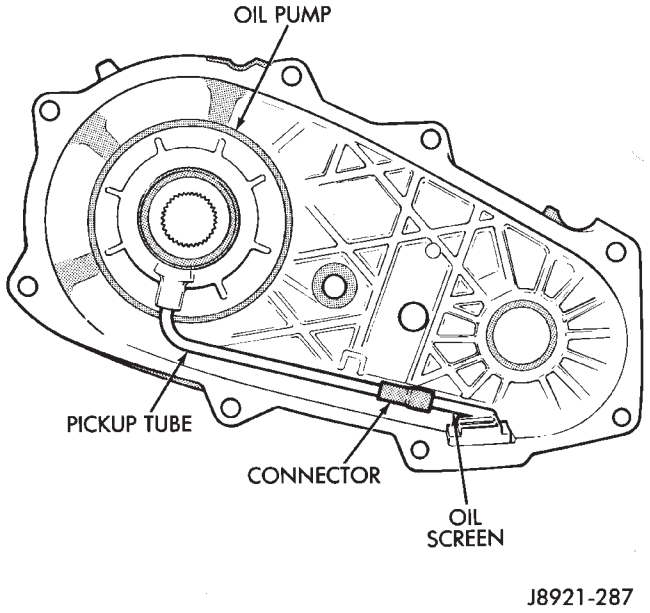

Fig. 73 Oil Screen And Pickup Tube Installation

(59) Install magnet in front case pocket (Fig. 74).

(60) Apply 3 mm (1/8 in.) wide bead of Mopar gasket maker, silicone adhesive sealer, or Loctite 518 to seal surface of front case.

(61) Align and install rear case on front case. Be sure case locating dowels are in place and that mainshaft splines are engaged in oil pump inner gear.

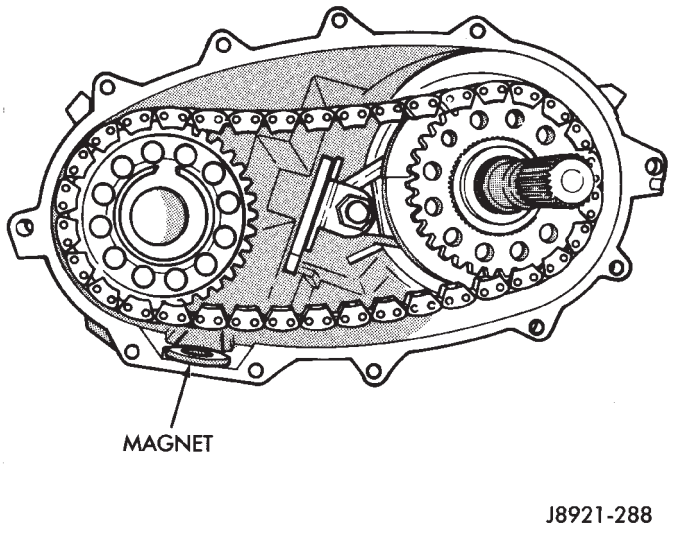

Fig. 74 Installing Case Magnet

(62) Install and tighten front case-to-rear case bolts to 41 N·m (30 ft. lbs.) torque. **Be sure to install a washer under each bolt used at case dowel locations.**

(63) Tap rear retainer bearing out of retainer with hammer and brass drift.

(64) Install bearing in rear retainer with Driver Handle C-4171 and Installer 5064 (Fig. 75).

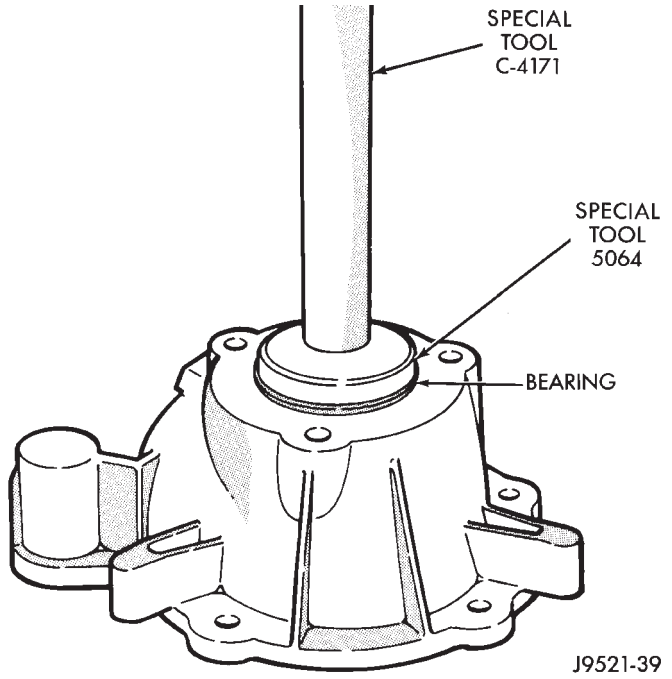

Fig. 75 Installing Rear Bearing In Retainer

(65) Apply 3 mm (1/8 in.) wide bead of Mopar gasket maker, silicone adhesive sealer, or Loctite 518 to seal surface of rear retainer.

(66) Install locating dowel in rear retainer (if removed) and install retainer on the case. Tighten retainer bolts to 41 N·m (30 ft. lbs.) torque.

(67) Install new rear bearing snap ring (Fig. 76). Lift mainshaft slightly to seat snap ring if necessary.

(68) Remove extension housing seal if not removed

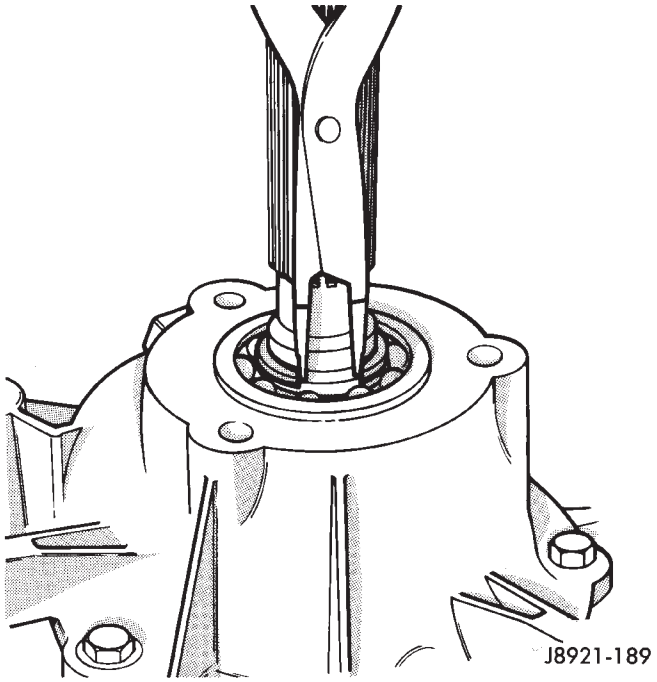

Fig. 76 Rear Bearing Snap Ring Installation

previously.

(69) Replace extension housing bushing (Fig. 77).

- Use Tools C-4171 and 7889-A to remove bushing
- Use Tools C-4171 and 5066 to install bushing

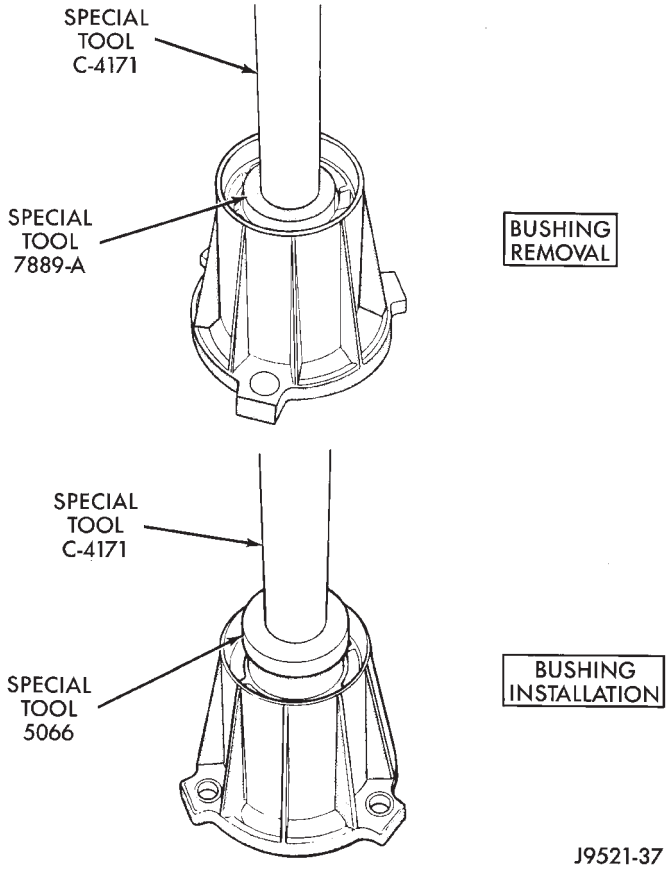

Fig. 77 Extension Housing Bushing Replacement

(70) Install new extension housing oil seal with Special Tool 7891 (Fig. 78).

(71) Apply 3 mm (1/8 in.) wide bead of Mopar gasket maker, silicone adhesive sealer, or Loctite 518 to seal surface of extension housing.

(72) Install extension housing on case. Tighten housing bolts to 41 N·m (30 ft. lbs.) torque.

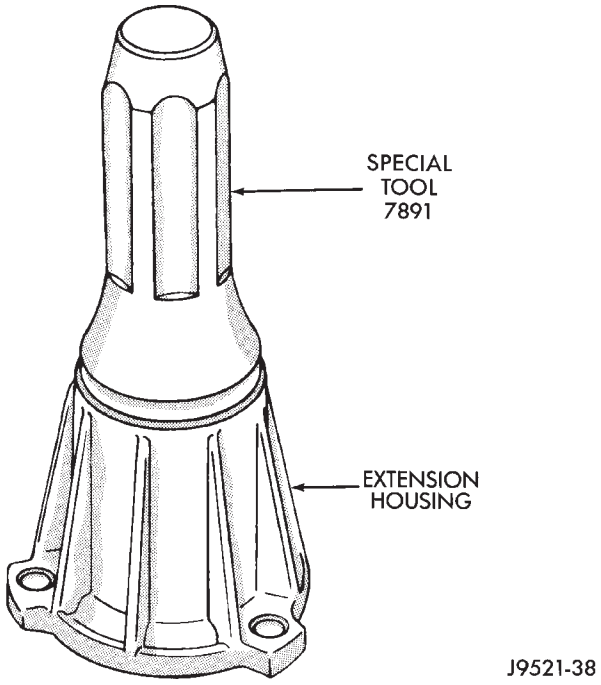

Fig. 78 Seating Extension Housing Seal

(73) Install front yoke. Secure yoke with new seal washer and nut. Tighten nut to 149 N·m (110 ft. lbs.) torque.

(74) Install new gasket on vacuum switch and install switch in case. Tighten switch to 27 N·m (20 ft. lbs.) torque.

(75) Install speedometer components.

(76) Install and tighten drain plug to 47 N·m (35 ft. lbs.) torque.

(77) After installing transfer case, refill with recommended lubricant.

(78) Tighten fill plug to 47 N·m (35 ft. lbs.) torque.

(79) Adjust transfer case shift linkage.

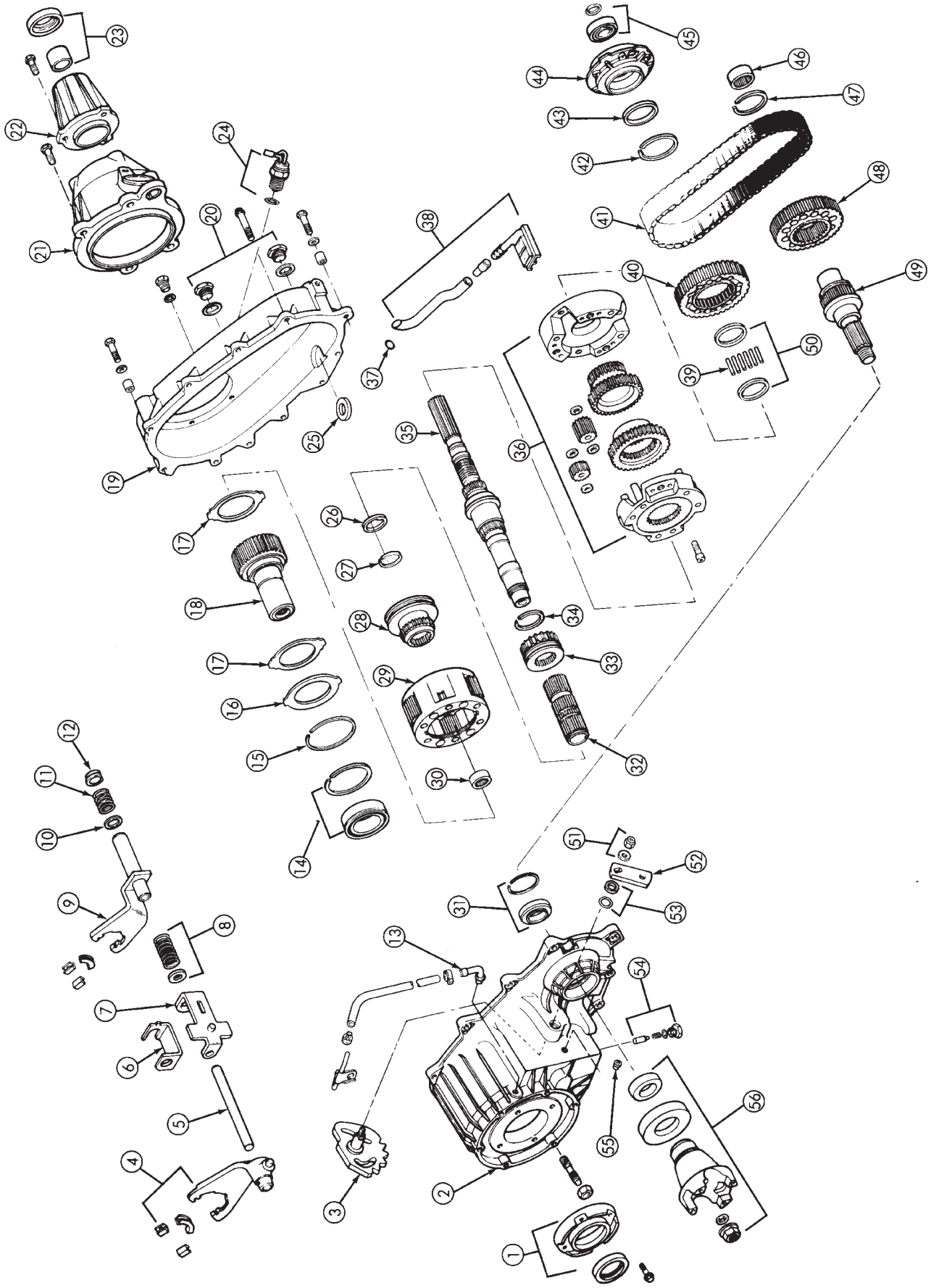
J9521-191
NP242 TRANSFER CASE

LEGEND FOR NP242 TRANSFER CASE

1 FRONT BEARING RETAINER AND SEAL
2 FRONT CASE
3 SHIFT SECTOR
4 LOW RANGE FORK AND INSERTS
5 SHIFT RAIL
6 SHIFT BRACKET
7 SLIDER BRACKET
8 BUSHING AND SPRING
9 MODE FORK AND INSERTS
10 BUSHING
11 FORK SPRING
12 BUSHING
13 VENT TUBE ASSEMBLY
14 INPUT GEAR BEARING AND SNAP RING
15 LOW RANGE GEAR SNAP RING
16 RETAINER, LOW RANGE GEAR
17 THRUST WASHER, LOW RANGE GEAR
18 INPUT GEAR
19 REAR CASE
20 DRAIN/FILL PLUGS
21 REAR BEARING RETAINER
22 EXTENSION HOUSING
23 BUSHING AND OIL SEAL
24 SWITCH
25 MAGNET
26 THRUST RING
27 SNAP RING
28 SHIFT SLEEVE
29 LOW RANGE GEAR
30 PILOT BUSHING (INPUT GEAR/MAINSHAFT)
31 FRONT OUTPUT SHAFT FRONT BEARING AND SNAP RING
32 INTERMEDIATE CLUTCH SHAFT
33 SHIFT SLEEVE
34 SNAP RING
35 MAINSHAFT
36 DIFFERENTIAL ASSEMBLY
37 OIL PUMP TUBE O-RING
38 OIL PUMP PICKUP TUBE AND SCREEN
39 MAINSHAFT BEARING ROLLERS
40 DRIVE SPROCKET
41 DRIVE CHAIN
42 SNAP RING
43 OIL PUMP SEAL
44 OIL PUMP
45 REAR BEARING AND SNAP RING
46 FRONT OUTPUT SHAFT REAR BEARING
47 SNAP RING
48 DRIVEN SPROCKET
49 FRONT OUTPUT SHAFT
50 MAINSHAFT BEARING SPACERS
51 SHIFT LEVER WASHER AND NUT
52 SHIFT LEVER
53 SECTOR O-RING AND SEAL
54 DETENT PIN, SPRING AND PLUG
55 SEAL PLUG
56 FRONT YOKE NUT, SEAL WASHER, YOKE, SLINGER AND FRONT OUTPUT SEAL

J9521-192

TRANSMISSION/TRANSFER CASE SPECIFICATIONS

TORQUE SPECIFICATIONS—MANUAL TRANSMISSION

Description	Torque
Access Plugs	19 N•m (14 ft. lbs.)
Adapter Housing Bolts	37 N•m (27 ft. lbs.)
Backup Light Switch	37 N•m (27 ft. lbs.)
Drain and Fill Plugs	37 N•m (27 ft. lbs.)
Front Bearing Retainer Bolts	17 N•m (12 ft. lbs.)
Interlock and Detent Ball Plugs	19 N•m (14 ft. lbs.)
Propeller Shaft Clamp Screws	16-23 N•m (140-200 in. lbs.)
Rear Mount-To-Transmission Bolts	33-60 N•m (24-44 ft. lbs.)
Rear Mount Clevis Bolt/Nut	54-75 N•m (40-55 ft. lbs.)
Rear Mount-To-Crossmember Nuts	33-49 N•m (24-36 ft. lbs.)
Restrictor Pins	19 N•m (14 ft. lbs.)
Reverse Shift Arm Bracket Bolts	18 N•m (13 ft. lbs.)
Shift Arm Set Screw	38 N•m (28 ft. lbs.)
Shift Fork Set Screws	20 N•m (15 ft. lbs.)
Shift Knob Nut	20-34 N•m (15-25 ft. lbs.)
Shift Lever Floor Cover Screws	2-3 N•m (17-30 in. lbs.)
Shift Tower Bolts	18 N•m (13 ft. lbs.)
Transfer Case Mounting Nuts	30-41 N•m (22-30 ft. lbs.)

J9321-89

SELECTIVE SNAP RING CHART—AX 15 MANUAL TRANSMISSION

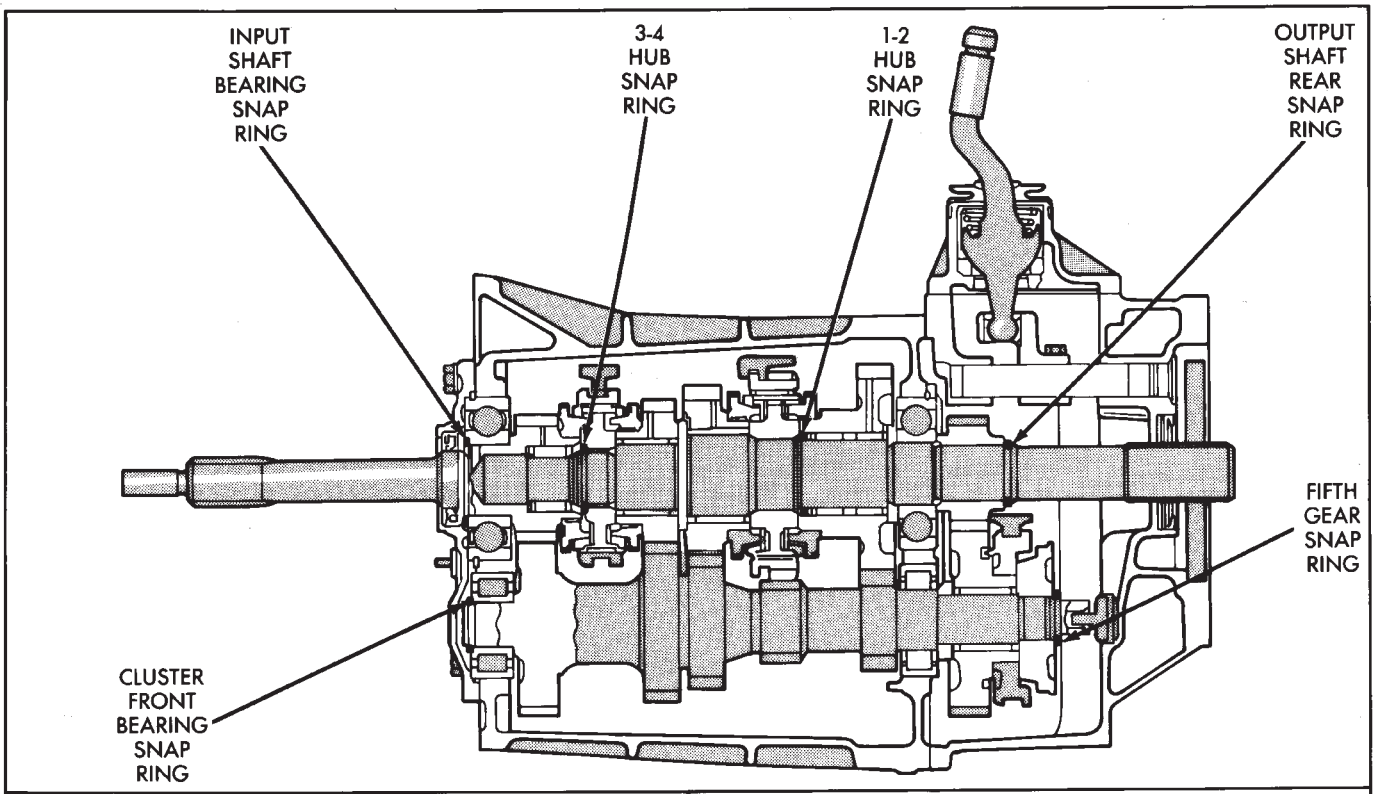

INPUT SHAFT BEARING SNAP RING

I.D. MARK	THICKNESS
A	2.10-2.15 mm
B	2.15-2.20 mm
C	2.20-2.25 mm
D	2.25-2.30 mm
E	2.30-2.35 mm
F	2.35-2.40 mm
G	2.40-2.45 mm

1-2 HUB SNAP RING

I.D. MARK	THICKNESS
B	2.35-2.40 mm
C	2.40-2.45 mm
D	2.45-2.50 mm
E	2.50-2.55 mm
F	2.55-2.60 mm
G	2.60-2.65 mm

CLUSTER FRONT BEARING SNAP RING

I.D. MARK	THICKNESS
A	2.00-2.05 mm
B	2.05-2.10 mm
C	2.10-2.15 mm
D	2.15-2.20 mm
E	2.20-2.25 mm

OUTPUT SHAFT REAR SNAP RING

I.D. MARK	THICKNESS
A	2.75-2.80 mm
B	2.80-2.85 mm
C	2.85-2.90 mm
D	2.90-2.95 mm
E	2.95-3.00 mm
F	3.00-3.05 mm
G	3.05-3.10 mm
H	3.10-3.15 mm
I	3.15-3.20 mm
J	3.20-3.25 mm
K	3.25-3.30 mm
L	3.30-3.35 mm

3-4 HUB SNAP RING

I.D. MARK	THICKNESS
A	1.80-1.85 mm
B	1.85-1.90 mm
C	1.90-1.95 mm
D	1.95-2.00 mm
E	2.00-2.05 mm
F	2.05-2.10 mm
G	2.10-2.15 mm

FIFTH GEAR SNAP RING

I.D. MARK	THICKNESS
A	2.80-2.85 mm
B	2.85-2.90 mm
C	2.90-2.95 mm
D	2.95-3.00 mm
E	3.00-3.05 mm
F	3.05-3.10 mm
G	3.10-3.15 mm
H	3.15-3.20 mm

J8921-1131

30RH/32RH GENERAL SPECIFICATIONS

TRANSMISSION MODEL	32RH	30RH
Oil Pump Clearances	0.089-0.190 mm (0.0035-0.0075 in.)	0.089-0.190 mm (0.0035-0.0075 in.)
Planetary End Play	0.127-1.22 mm (0.005-0.048 in.)	0.025-1.19 mm (0.001-0.047 in.)
Input Shaft End Play	0.56-2.31 mm (0.002-0.091 in.)	0.050-2.31 mm (0.002-0.091 in.)
Clutch Pack Clearance:		
Front Clutch – 4 Disc	1.70-3.40 mm 0.067-0.134 in.	1.70-3.40 mm (0.067-0.134 in.)
Rear Clutch – 3 Disc		
Rear Clutch – 4 Disc	0.81-1.40 mm 0.032-0.055 in.	0.635-1.14 mm (0.025-0.045 in.)
Clutch Disc Usage:		
Front Clutch	4	4
Rear Clutch	4	3
Band Adjustments: (Turns backed off from indicated torque)		
Front	2¼ Ⓐ	2 ½ Ⓐ
Rear	4 Ⓐ	7 Ⓑ
Ⓐ Backed off from 72 in. lbs.		
Ⓑ Backed off from 41 in. lbs.		
Recommended (and preferred) Fluid (all)	MOPAR ATF Plus, Type 7176 Automatic Transmission Fluid	
	J9421-194	

30RH/32RH SNAP RING/THRUST WASHER/THRUST PLATE SPECIFICATIONS

	TRANSMISSION MODEL	
COMPONENT	32RH	30RH
Front Clutch Thrust Washer (on reaction shaft support hub)	0.061 in.	0.061-0.063 in.
Rear Clutch Thrust Washer (on clutch retainer)	0.061 in.	0.061-0.063 in.
Output Shaft Thrust Plate (on output shaft pilot hub)	0.060-0.063 in.	0.060-0.063 in.
Output Shaft Thrust Washer (in rear clutch hub)	0.052-0.054 in. 0.068-0.070 in. 0.083-0.085 in.	0.052-0.054 in. 0.068-0.070 in. 0.083-0.086 in.
Rear Clutch Pack Snap Ring	0.068 in. 0.060 in. 0.076 in. 0.098 in.	0.06-0.062 in. 0.068-0.070 in. 0.076-0.078 in.
Planetary Geartrain Snap Ring (At front end of output shaft)	0.040-0.044 in. 0.062-0.066 in. 0.082-0.086 in.	0.040-0.044 in. 0.062-0.066 in. 0.082-0.086 in.

J9421-193

30RH/32RH PRESSURE TEST SPECIFICATIONS

Line Pressure	Closed Throttle 1000 rpm	372-414 kPa (54-60 psi) 648 kPa (94 psi)
Front Servo Release	Third Gear Only	No more than 21 kPa (3 psi) lower than line pressure.
Rear Servo Apply	1 Range R Range	No more than 21 kPa (3 psi) lower than line pressure. 1103 kPa (160 psi) at idle, builds to 1862 kPa (270 psi) at 1600 rpm.
Governor	D Range and Closed Throttle	Pressure should respond smoothly to changes in mph and return to 0-7 kPa (0-1½ psi) when stopped with transmission in D, 1, 2. **Pressure above 7 kPa (1½ psi) at standstill will prevent transmission from downshifting.** J9421-191

30RH/32RH TORQUE SPECIFICATIONS

DESCRIPTION	TORQUE
Cooler Line Fittings	18 N•m (13 ft. lbs.)
Converter Bolts:	
9.5 in., 3-lug converter	54 N•m (40 ft. lbs.)
9.5 in., 4-lug converter	74 N•m (55 ft. lbs.)
10.0 in., 4-lug converter	74 N•m (55 ft. lbs.)
Crossmember Bolts/Nuts	68 N•m (50 ft. lbs.)
Driveplate Bolts	75 N•m (55 ft. lbs.)
Extension/Adapter Housing Bolts	43 N•m (32 ft. lbs.)
Front Band Pivot Pin Access Plug	17 N•m (13 ft. lbs.)
Front Band Adjusting Screw Locknut	34 N•m (25 ft. lbs.)
Governor Body-to-Park Gear Bolts	11 N•m (8 ft. lbs.)
Converter Clutch Park/Module Screws	4 N•m (35 in. lbs.)
Neutral Position Switch	34 N•m (25 ft. lbs.)
Oil Filter Screws	4 N•m (35 in. lbs.)
Oil Pan Bolts	17 N•m (13 ft. lbs.)
Oil Pump Bolts	20 N•m (15 ft. lbs.)

DESCRIPTION	TORQUE
Rear Support Bolts	17 N•m (150 in. lbs.)
Pressure Test Port Plugs	14 N•m (10 ft. lbs.)
Propeller Shaft Clamp Bolts	19 N•m (170 in. lbs.)
Reaction Shaft Support Bolts	10 N•m (15 ft. lbs.)
Rear Band Adjusting Screw Locknut	41 N•m (30 ft. lbs.)
Rear Mount Bolts/Nuts	68 N•m (50 ft. lbs.)
Solenoid-to-Transfer Plate Screw	4 N•m (35 in. lbs.)
Speedometer Adapter Clamp Bolt	11 N•m (8 ft. lbs.)
Valve Body Screws	4 N•m (35 in. lbs.)
Valve Body-to-Case Bolts	12 N•m (100 in. lbs.)

J9421-192

AW-4 GENERAL SPECIFICATIONS

Gear Ratios:

First	2.804:1
Second	1.531:1
Third	1.000:1
Fourth (Overdrive)	0.753:1
Reverse	2.393:1

Transmission Fluid	Jeep automatic transmission fluid or DEXRON® II
Fluid Level	To "Full" mark with fluid hot (normal operating temperature)
Fluid Capacity (all models)	8.0 Liters (8.45 qts.)

Test Specifications

Stall Speed:

In D Range and Reverse	2100–2400 rpm

LIne Pressure:

In D at Curb Idle	61–70 psi (421–481 kPa)
In D at WOT	173–209 psi (1196–1442 kPa)
In Reverse at Curb Idle	75–90 psi (519–618 kPa)
In Reverse at WOT	213–263 psi (1471–1814 kPa)

Time Lag Test:

Engagement in D Range	1.2 seconds
Engagement in Reverse	1.5 seconds

Valve Body Solenoid Resistance	11–15 ohms
Transmission Fluid Normal Operating Temperature	50–80°C (122–176°F)
TPS Input Voltage (AU)	5.0 Volts (approx.)

TPS Output Voltage

4-Cylinder	0.2 Volts (approx.)
6-Cylinder	4.2 Volts (approx.)

J9121-401

AW-4 OIL PUMP WEAR LIMITS

Drive Gear

Tip Clearance:

Standard ..... 0.11-0.14 mm (0.0043-0.0055 in.)

Maximum Allowance ..... 0.3 mm (0.012 in.)

Gear-to-Pump Body

End Clearance:

Standard ..... 0.02-0.05 mm (0.0008-0.0020 in.)

Maximum Allowance ..... 0.1 mm (0.004 in.)

Driven Gear-to-Pump

Body Clearance:

Standard ..... 0.07-0.15 mm (0.0028-0.0059 in.)

Maximum Allowance ..... 0.3 mm (0.012 in.)

J8921-740

AW-4 CLUTCH DISC AND PLATE THICKNESS

Component	Minimum Allowable Thickness
Clutch Disc (all except first-reverse and forward clutch discs)	1.84 mm (0.0724 in.)
6-Cylinder Forward Clutch Disc	1.51 mm (0.0594 in.)
6 Cylinder Direct Clutch Plates: Thin Plate (1) Thick Plates (3)	 2.3 mm (0.905 in.) 3.0 mm (0.118 in.)
6-Cylinder Forward Clutch Plate	1.8 mm (0.070 in.)
First-Reverse Brake Disc (all)	1.51 mm (0.0594 in.)

J9121-402

AW-4 BUSHING AND PISTON CLEARANCE

BUSHING INSIDE DIAMETER (MAXIMUM)

Bushing Location	Maximum Allowance Inside Diameter
Extension Housing	38.09 mm (1.4996 in.)
Direct Clutch Drum	53.97 mm (2.1248 in.)
Overdrive Planetary Gear	11.27 mm (.4437 in.)
Overdrive Direct Clutch Drum	27.11 mm (1.0673 in.)
Stator Shaft (Front)	21.58 mm (.8496 in.)
Stator Shaft (Rear)	27.08 mm (1.0661 in.)
Oil Pump Body	38.19 mm (1.5035 in.)
Transmission Case	38.18 mm (1.5031 in.)

PISTON STROKE LENGTH

Piston Location	Specification
Direct Clutch (all)	1.37–1.67 mm (.0539–.0657 in.)
6-Cylinder Overdrive Brake	1.40–1.70 mm (.0551–.0669 in.)
Second Coast Brake (all)	1.5–3.0 mm (.059–.118 in.)
6-Cylinder Forward Clutch	3.55–3.73 (.1397–.1468 in.)
Overdrive Direct Clutch (all)	1.85–2.15 mm (.0728–.0846 in.)

END PLAY AND CLEARANCE

Component	Specification
Output Shaft End Play	.27–.86 mm (.0106–.0339 in.)
6-Cylinder First-Reverse Brake Pack Clearance	.70–1.20 mm (.028–.047 in.)
6-Cylinder Second Brake Pack Clearance	.62–1.98 mm (.024–.078 in.)

J9121-403

AW-4 RETAINER AND PISTON SPECIFICATIONS

OVERDRIVE BRAKE RETAINER SELECTION

Retainer No.	Thickness	Retainer No.	Thickness
26	3.3 mm (.130 in.)	11	3.8 mm (.150 in.)
25	3.5 mm (.138 in.)	23	3.9 mm (.154 in.)
12	3.6 mm (.142 in.)	Not Marked	4.0 mm (.157 in.)
24	3.7 mm (.146 in.)	—	—

DIRECT CLUTCH RETAINER SELECTION

Retainer No.	Thickness	Retainer No.	Thickness
33	3.0 mm (.118 in.)	29	3.4 mm (.134 in.)
32	3.1 mm (.122 in.)	28	3.5 mm (.138 in.)
31	3.2 mm (.126 in.)	27	3.6 mm (.142 in.)
30	3.3 mm (.130 in.)	34	3.7 mm (.146 in.)

OVERDRIVE CLUTCH RETAINER SELECTION

Retainer No.	Thickness	Retainer No.	Thickness
16	3.6 mm (.142 in.)	19	3.3 mm (.130 in.)
17	3.5 mm (.138 in.)	20	3.2 mm (.126 in.)
18	3.4 mm (.134 in.)	21	3.1 mm (.122 in.)

SECOND COAST BRAKE PISTON ROD SELECTION

Rod	Rod Length
No. 1	71.4 mm (2.811 in.)
No. 2	72.9 mm (2.870 in.)

FORWARD CLUTCH RETAINER SELECTION

Retainer No.	Thickness	Retainer No.	Thickness
42	4.0 mm (.157 in.)	61	3.0 mm (.118 in.)
44	3.8 mm (.149 in.)	62	3.6 mm (.142 in.)
45	3.4 mm (.134 in.)	63	4.2 mm (.165 in.)
60	3.2 mm (.126 in.)	64	4.4 mm (.173 in.)

FIRST-REVERSE BRAKE CLEARANCE SELECTION

Retainer No.	Thickness	Retainer No.	Thickness
50	5.0 mm (.197 in.)	53	4.4 mm (.173 in.)
51	4.8 mm (.189 in.)	54	4.2 mm (.165 in.)
52	4.6 mm (.181 in.)	55	4.0 mm (.157 in.)

J9121-404

AW-4 VALVE BODY CHECK BALL DIMENSIONS

Check Ball	Diameter
(A) Rubber Ball	6.35 mm (0.250 in.)
(B) Rubber Ball	5.535 mm (.218 in.)

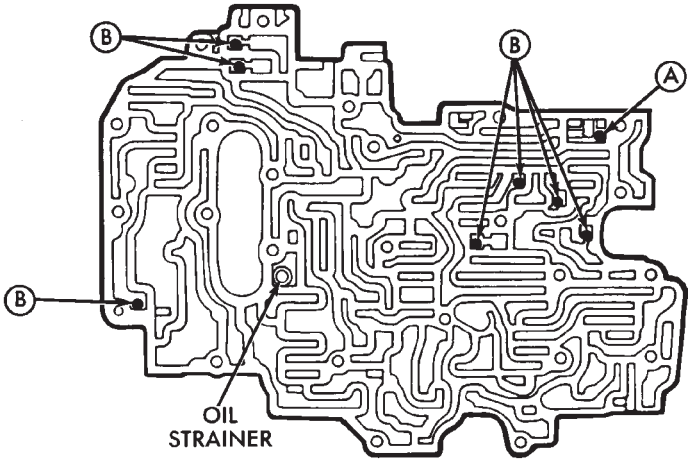

J9121-405

AW-4 CLUTCH AND BRAKE PACK REQUIREMENTS

Component	Discs Required	Plates Required	Retainers Required
6-Cylinder Overdrive Brake	4	3	2
6-Cylinder Second Brake	5	5	1
6-Cylinder Overdrive Direct Clutch	2	2	1
6-Cylinder Direct Clutch	4	4	1
6-Cylinder Forward Clutch	6	6	1
6-Cylinder First-Reverse Brake	7	7	1

J9121-406

AW-4 ACCUMULATOR COMPONENT IDENTIFICATION

	Component	Approximate Outside Diameter
SECOND BRAKE ACCUMULATOR	SPRING A	14.17 mm (.558 in.)
	PISTON B	36.9 mm (1.453 in.)
	SPRING C	19.91 mm (.784 in.)
DIRECT CLUTCH ACCUMULATOR	SPRING D	12.07 mm (.475 in.)
	PISTON E	36.9 mm (1.453 in.)
	SPRING F	20.19 mm (.795 in.)
	SPRING G	14.81 mm (.583 in.)
OVERDRIVE BRAKE ACCUMULATOR	SPRING H	14.10 mm (.555 in.)
	PISTON J	31.9 mm (1.256 in.)
	SPRING K	19.99 mm (.785 in.)
OVERDRIVE CLUTCH ACCUMULATOR	SPRING L	14.0 mm (0.551 in.)
	SPRING M	20.3 mm (0.799 in.)
	PISTON N	29.9 mm (1.177 in.)

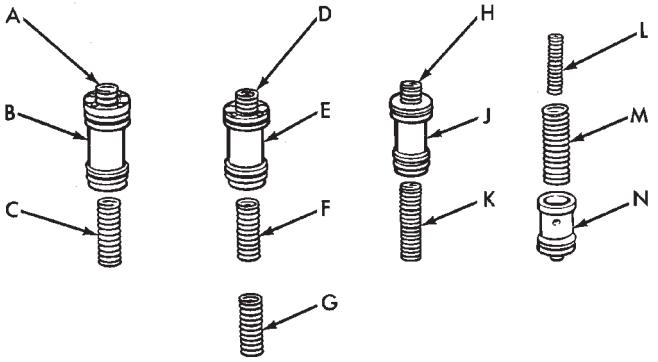

J9121-407

AW-4 VALVE AND SPRING IDENTIFICATION

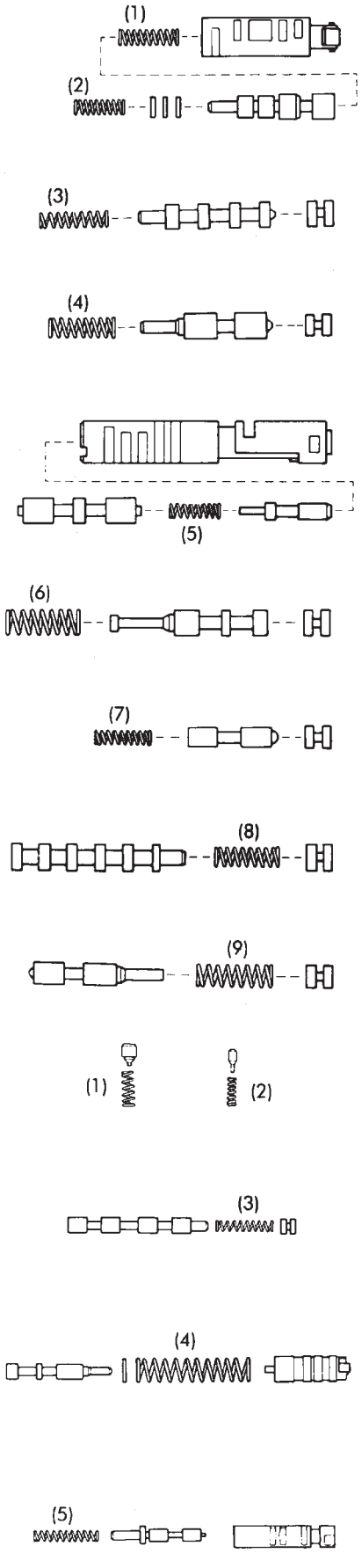

Spring	Free Length
(1) Downshift Plug	27.3 mm (1.074 in.)
(2) Throttle Valve	20.6 mm (.811 in.)
(3) 3-4 Shift Valve	30.8 mm (1.212 in.)
(4) Second Coast Modulator Valve	25.3 mm (.996 in.)
(5) Lockup Relay Valve	21.4 mm (.843 in.)
(6)Secondary Regulator Valve	30.9 mm (1.217 in.)
(7) Cut-Back Valve	21.8 mm (.858 in.)
(8) 2-3 Shift Valve	30.8 mm (1.212 in.)
(9) Low Coast Modulator Valve	27.8 mm (1.094)

Spring	Spring Length
(1) Check Valve	20.2 mm (.797 in.)
(2) Pressure Relief Valve	11.2 mm (.441 in.)
(3) 1-2 Shift Valve	30.8 mm (1.213 in.)
(4) Primary Regulator Valve	62.3 mm (2.453 in.)
(5) Accumulator Control Valve	29.8 mm (1.173 in.)

J9121-408

AW-4 TORQUE SPECIFICATIONS

Description	Torque
Converter Housing Bolts	
10 mm	32-36 N•m (23-27 ft. lbs.)
12 mm	55-59 N•m (40-43 ft. lbs.)
Cooler Line Retaining Clip Nuts	2-4 N•m (18-35 in. lbs.)
Cooler Line Bracket Nuts	5-11 N•m (48-96 in. lbs.)
Cooler Line Fitting Nuts (at auto. trans. fittings)	18-23 N•m (160-200 in. lbs.)
Detent Spring Bolt	9-11 N•m (80-96 in. lbs.)
Dust Cover Nuts/Bolts	18-23 N•m (159-203 in. lbs.)
Extension Housing Bolts	32-36 N•m (23-27 ft. lbs.)
Fill Tube Bracket Bolt	50-64 N•m (37-47 ft. lbs.)
Neutral Switch	
Bolt	12-14 N•m (8-10 ft. lbs.)
Nut	6-8 N•m (53-70 in. lbs.)
OD Support Bolt (to case)	23-27 N•m (18-20 ft. lbs.)
Oil Pan Bolts	6-8 N•m (53-70 in. lbs.)
Oil Pan Drain Plug	19-21 N•m (14-16 ft. lbs.)
Oil Pump Bolt (to case)	21-23 N•m (16-18 ft. lbs.)
Oil Pump Bolt (to stator shaft)	9-11 N•m (80-96 in. lbs.)
Oil Screen Bolt	9-11 N•m (80-96 in. lbs.)
Park Pawl Bracket	9-11 N•m (80-96 in. lbs.)
Propeller Shaft Clamp Screws	16-23 N•m (140-200 in. lbs.)
Rear Mount-To-Transmission Bolts	60-81 N•m (44-66 ft. lbs.)
Rear Mount-To-Clevis Bracket Bolt/Nut	54-75 N•m (40-55 ft. lbs.)
Rear Mount Clevis Bracket-To-Crossmember Nuts	33-49 N•m (24-36 ft. lbs.)
Shift Cable Bracket Screws At Transmission	25-39 N•m (221-345 in. lbs.)
Shift Lever Mounting Cover Screws	1-2 N•m (9-20 in. lbs.)
Shift Lever Housing Nuts	16-26 N•m (141-230 in. lbs.)
Solenoid Harness Bolt	6-8 N•m (57-75 in. lbs.)
Speedometer Adapter Clamp Screw	10-12 N•m (90-110 in. lbs.)
Speed Sensor Coupling Nut	14-20 N•m (125-175 in. lbs.)
Throttle Cable Engine Bracket Screws	7-11 N•m (63-94 in. lbs.)
Throttle Cable Retaining Screw (at transmission)	8-10 N•m (70-98 in. lbs.)
Transfer Case Mounting Nuts	30-41 N•m (22-30 ft. lbs.)
Transmission Shift Lever Nut	15-17 N•m (134-154 in. lbs.)
Transmission-To-Engine Block Bolts	50-64 N•m (37-47 ft. lbs.)
Valve Body Bolts (to case)	9-11 N•m (80-96 in. lbs.)
Valve Body Bolts (to valve body)	6-7 N•m (54-58 in. lbs.)

J9321-88

NP231/NP242 TORQUE SPECIFICATIONS

Description	Torque
Detent Plug	16-24 N•m (12-18 ft. lbs.)
Differential Case Bolt	17-27 N•m (150-240 in. lbs.)
Drain/Fill Plugs	40-54 N•m (30-40 ft. lbs.)
Extension Housing Bolt	35-46 N•m (26-34 ft. lbs.)
Front Bearing Retainer Bolt	16-27 N•m (12-20 ft. lbs.)
Front Case-To-Rear Case Bolt	35-46 N•m (26-34 ft. lbs.)
Front Yoke Nut	122-176 N•m (90-130 ft. lbs.)
Oil Pump Screw	1.4-1.8 N•m (12-15 in. lbs.)
Range Lever Nut	27-34 N•m (20-25 ft. lbs.)
Rear Retainer Bolt	35-46 N•m (26-34 ft. lbs.)
Transfer Case Mounting Nuts	35-47 N•m (26-35 ft. lbs.)
U-Joint Clamp Bolts	19 N•m (170 in. lbs.)
Vacuum Switch	20-34 N•m (15-25 ft. lbs.)

J9321-95

WHEELS AND TIRES

CONTENTS

page

SPECIFICATIONS 12
TIRES 1
VEHICLE VIBRATION 10
WHEELS 6

TIRES

INDEX

page

Cleaning of Tires 2
General Information 1
Pressure Gauges 2
Repairing Leaks 3
Replacement Tires 2
Rotation 3
Tire Inflation Pressures 2
Tire Noise or Vibration 4
Tire Wear Patterns 4
Tread Wear Indicators 3

GENERAL INFORMATION

Tires are designed for each specific vehicle. They provide the best overall performance for normal operation. The ride and handling characteristics match the vehicle's requirements. With proper care they will give excellent reliability, traction, skid resistance, and tread life. These tires have specific load carrying capacities. When correctly inflated, they will operate properly.

Tires used in cool climates, and with light loads will have a longer life than tires used in hot climates with heavy loads. Abrasive road surfaces will accelerate tire wear.

Driving habits have more effect on tire life than any other factor. Careful drivers will obtain much greater mileage than careless drivers.

Driving habits that shorten the life of any tire;

- Rapid acceleration and deceleration
- Severe application of brakes
- High-speed driving
- Taking turns at excessive speeds
- Striking curbs and other obstacles

It is very important to follow the tire rotation interval

IDENTIFICATION

Tire type, size, aspect ratio and speed rating are encoded in the letters and numbers imprinted on the side wall of the tire. Refer to the chart to decipher the tire identification code (Fig. 1).

Performance tires will have a speed rating letter after the aspect ratio number. The speed rating is not always printed on the tire sidewall. The letter **S** indicates that the tire is speed rated up to 112 mph.

- **Q** up to 100 mph
- **T** up to 118 mph
- **U** up to 124 mph
- **H** up to 130 mph
- **V** up to 149 mph
- **Z** more than 149 mph (consult the tire manufacturer for the specific speed rating)

An All Season type tire will have either **M + S, M & S or M—S** (indicating mud and snow traction) imprinted on the side wall.

RADIAL-PLY TIRES

Radial-ply tires improve handling, tread life, ride quality and decrease rolling resistance.

Radial-ply tires must always be used in sets of four. Under no circumstances should they be used on the front only. They may be mixed with temporary spare tires when necessary, but reduced speeds are recommended.

Radial-ply tires have the same load-carrying capacity as other types of tires of the same size. They use the same recommended inflation pressures.

SPARE TIRE (TEMPORARY)

The compact spare tire is designed for emergency use only. The original tire should be repaired and reinstalled at the first opportunity. Refer to Owner's Manual for complete details.

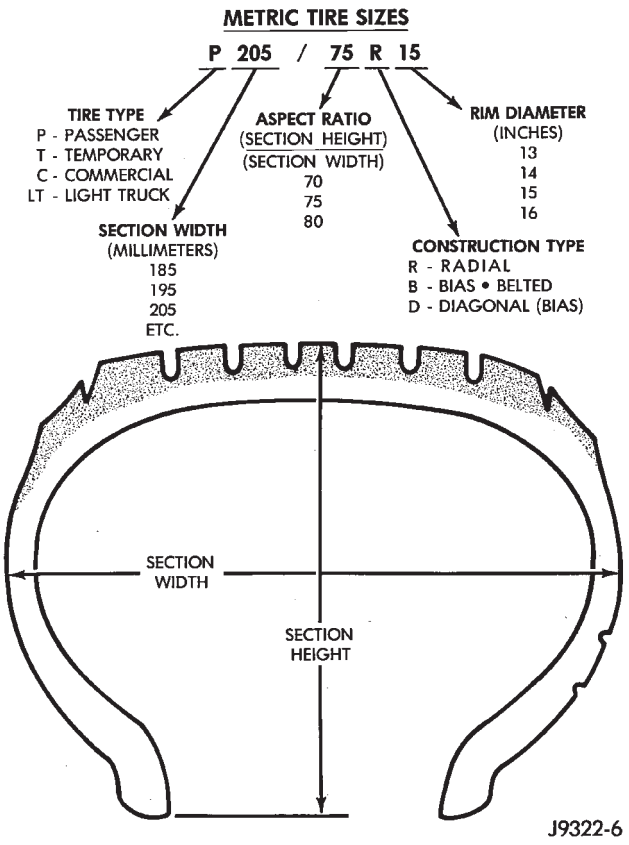

Fig. 1 Tire Size Identification

TIRE CHAINS

Tire snow chains may be used on certain models. Refer to Owner's Manual for more information.

CLEANING OF TIRES

Steam cleaning may be used for cleaning.

DO NOT use gasoline or wire brush for cleaning.

DO NOT use mineral oil or an oil-based solvent.

PRESSURE GAUGES

High-quality, dial-type, air-pressure gauges are recommended. After checking with the gauge, replace valve cap and finger tight.

TIRE INFLATION PRESSURES

Under inflation (Fig. 2) causes rapid shoulder wear and tire flexing.

Over inflation (Fig. 3) causes rapid center wear and loss of the tire's ability to cushion shocks.

Improper inflation can cause;

- Uneven wear patterns
- Reduced tread life
- Reduced fuel economy
- Unsatisfactory ride
- Cause the vehicle to drift

Refer to the Owner's Manual for information regarding proper tire inflation pressure.

This pressure has been carefully selected to provide for safe vehicle operation. Tire pressure should be checked **cold** once per month. Tire pressure decreases when the outside temperature drops.

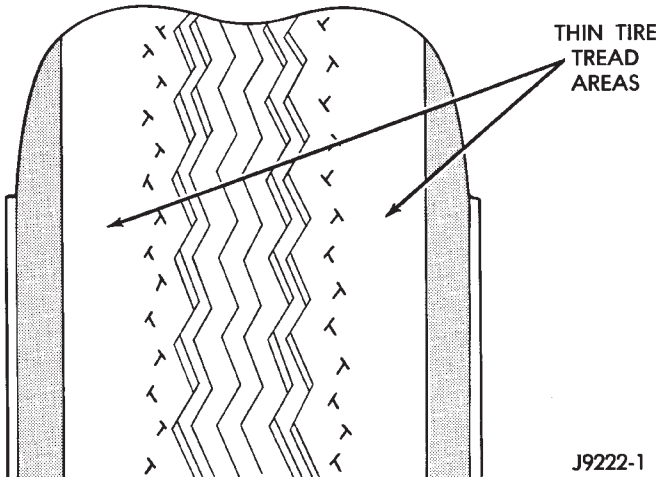

Fig. 2 Under Inflation Wear

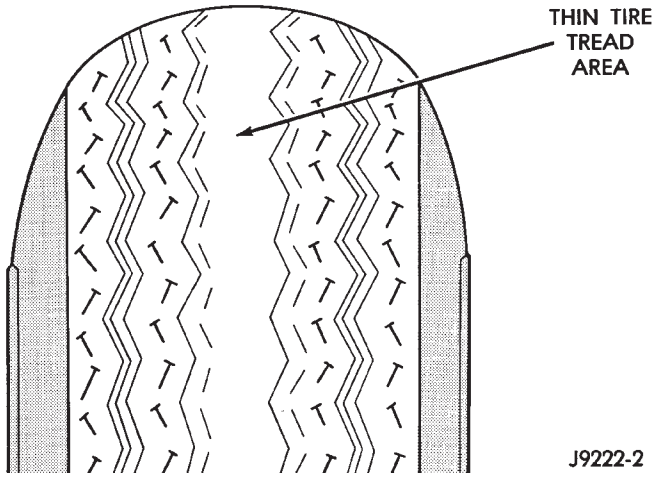

Fig. 3 Over Inflation Wear

Inflation pressures specified on the placards are always **cold inflation pressure**. Cold inflation pressure is obtained after the vehicle has not been operated for at least 3 hours. Tire inflation pressures may increase from 2 to 6 pounds per square inch (psi) during operation. **Do not** reduce this normal pressure build-up.

Vehicles loaded to the maximum capacity should not be driven at continuous speeds above 75 mph (120 km/h).

WARNING: OVER OR UNDER INFLATED TIRES CAN AFFECT VEHICLE HANDLING AND CAN FAIL SUDDENLY, RESULTING IN LOSS OF VEHICLE CONTROL.

REPLACEMENT TIRES

OEM tires provide a proper balance of many features such as;

- Ride

- Noise
- Handling
- Durability
- Tread life
- Traction
- Rolling resistance
- Speed capability

Original equipment tires should be used when replacement is needed.

Refer to the placard on the vehicle or the Owner's Manual for the correct replacement tire.

Failure to use original or equivalent replacement tires may adversely affect the handling of the vehicle.

The use of oversize tires **is not recommended.** They may cause interference with vehicle suspension and steering travel. This can cause tire damage or failure.

WARNING: FAILURE TO EQUIP THE VEHICLE WITH TIRES HAVING ADEQUATE LOAD CAPABILITY CAN RESULT IN SUDDEN TIRE FAILURE.

ROTATION

Tires on the front and rear axles operate at different loads and perform different steering, driving, and braking functions. For these reasons, the tires wear at unequal rates. They may also develop irregular wear patterns. These effects can be reduced by rotating the tires according to the maintenance schedule in the Owners Manual. This will improve tread life, traction and maintain a smooth quiet ride.

The suggested method of tire rotation is the **same side front to rear** pattern (Fig. 4). Other rotation methods can be used, but may not provide the same tire longevity benefits.

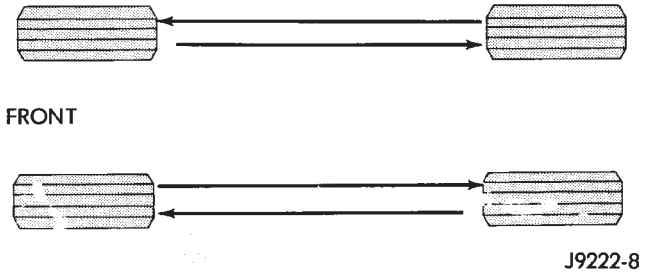

Fig. 4 Tire Rotation Pattern

TREAD WEAR INDICATORS

Tread wear indicators are molded into the bottom of the tread grooves. When tread is 1.6 mm (1/16 in.), the tread wear indicators will appear as a 13 mm (1/2 in.) band across the tread width.

Tire replacement is necessary when indicators appear in two or more grooves Fig. 5).

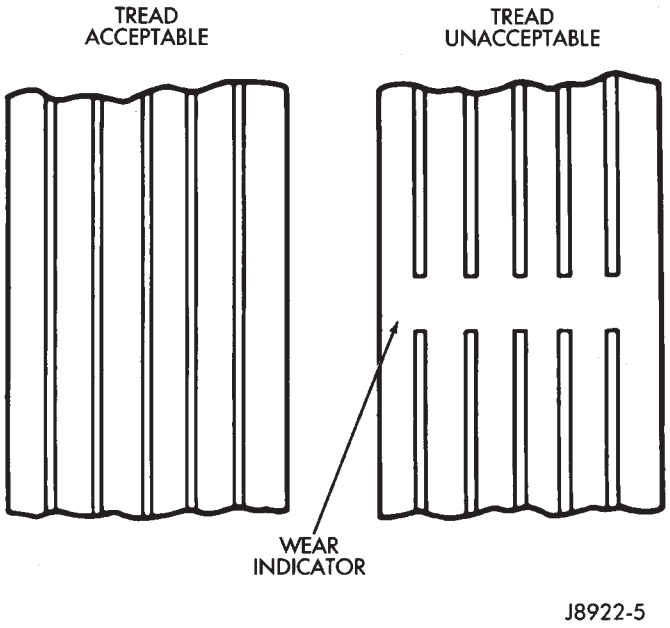

Fig. 5 Tread Wear Indicators

REPAIRING LEAKS

For proper repairing, a radial tire it must be removed from the wheel. Repairs should only be made if the puncture is in the **tread area** (Fig. 6). If outside the tread area the tire should be replaced.

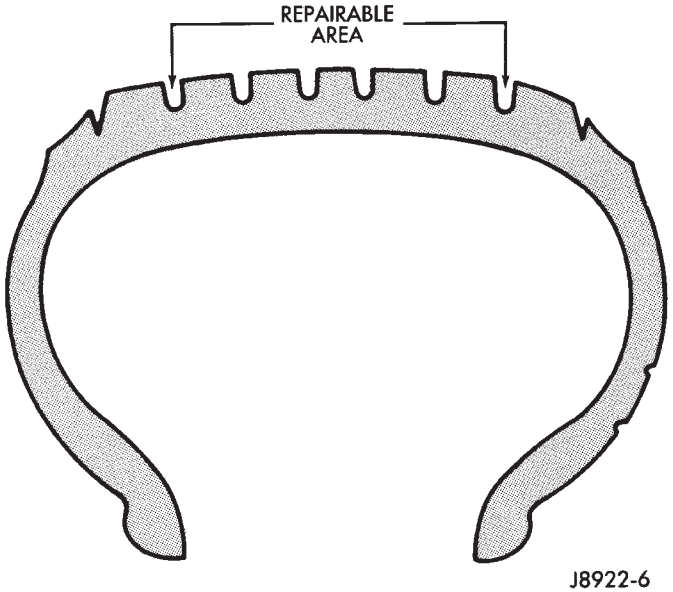

Fig. 6 Tire Repair Area

Deflate tire completely before dismounting tire from the wheel. Use lubrication such as a mild soap solution when dismounting or mounting tire. Use tools free of burrs or sharp edges.

Before mounting tire on wheel, make sure all rust scale is removed from the rim. Repaint or seal if necessary.

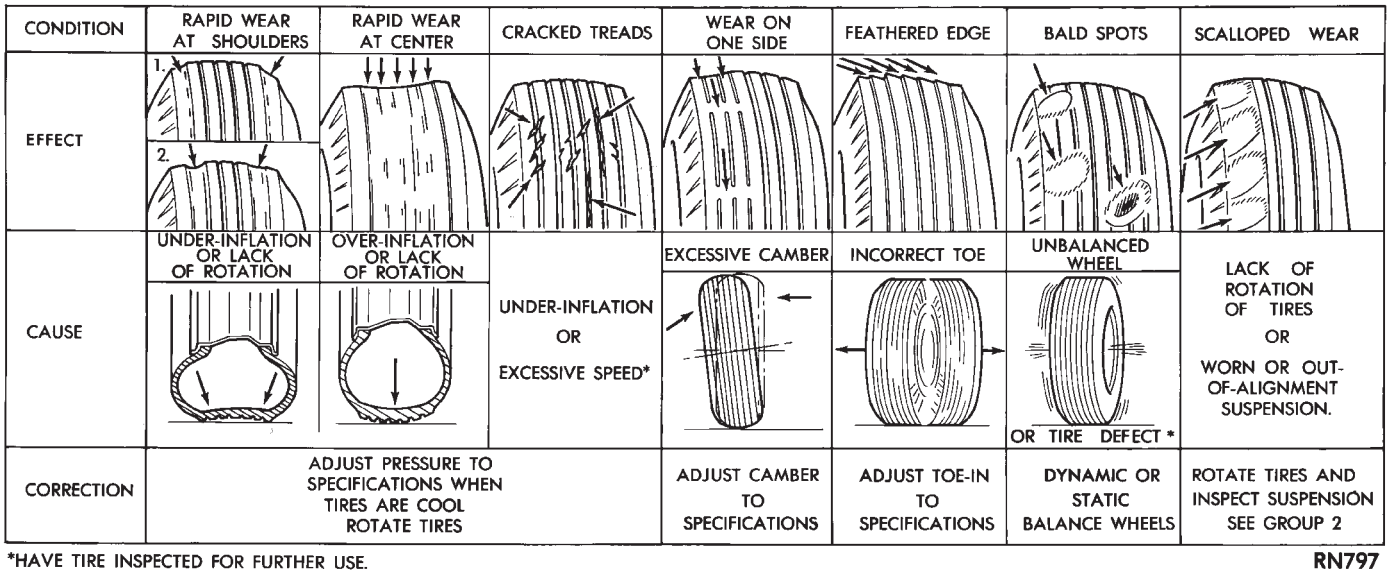

Fig. 7 Abnormal Tire Tread Wear Patterns

TIRE NOISE OR VIBRATION

The radial-ply tire on your vehicle is more sensitive to improper mounting, or imbalance.

To determine if tires are the cause of vibration, drive the vehicle over a smooth road at different speeds. Note the effect of acceleration and deceleration on noise level. Differential and exhaust noise will change in intensity as speed varies. Tire noise will usually remain constant.

TIRE WEAR PATTERNS

Under inflation will increase wear on the shoulders of the tire. Over inflation will increase wear at the center of the tread.

Excessive camber causes the tire to run at an angle to the road. One side of tread is worn more than the other.

Excessive toe-in or toe-out causes wear on the tread edges. There is a feathered effect across the tread (Fig. 7).

LEAD CORRECTION CHART

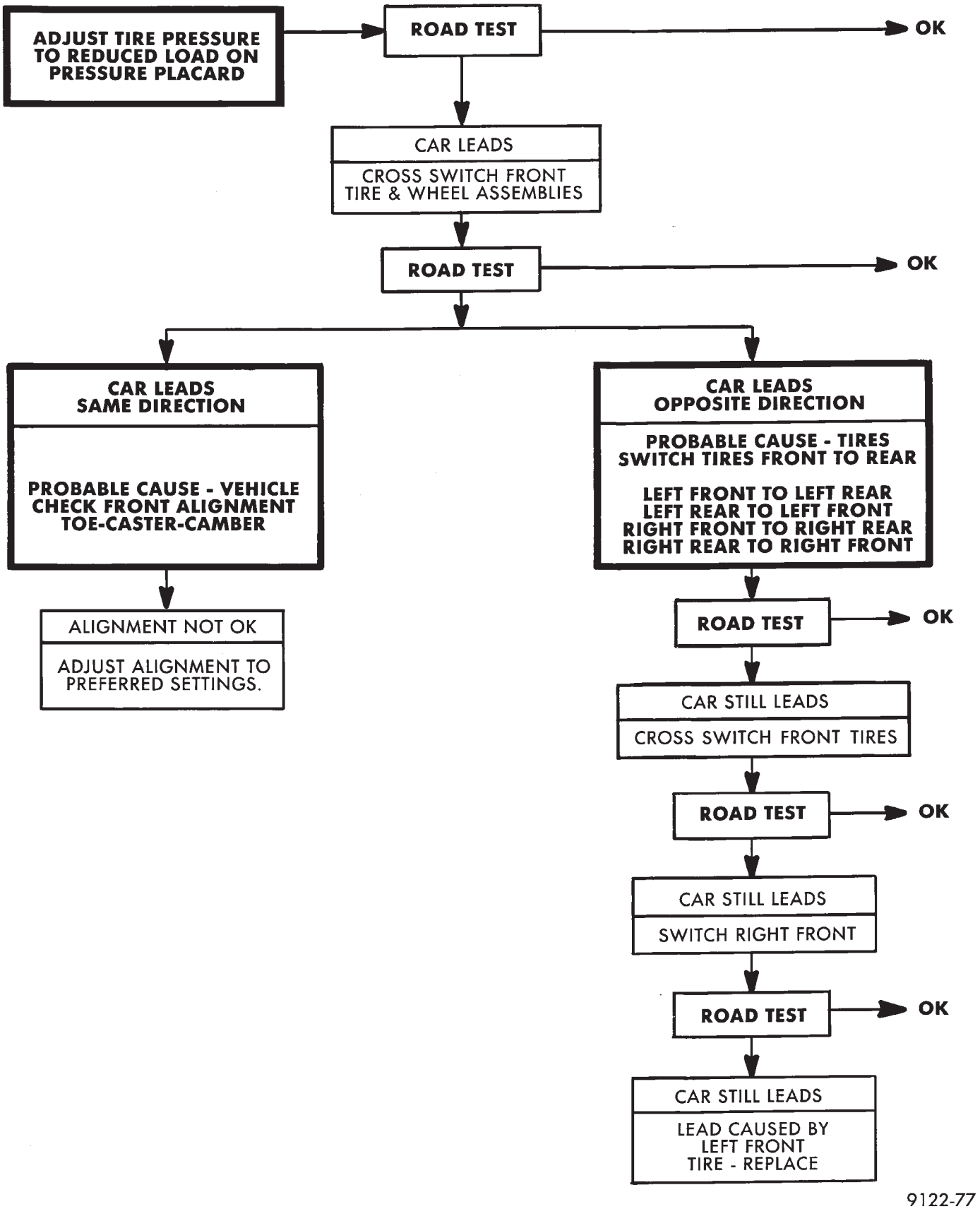

9122-77

WHEELS

GENERAL INFORMATION

Original equipment wheels are designed for the specified Maximum Vehicle Capacity.

All models use steel or cast aluminum drop center wheels. The safety rim wheel (Fig. 1) has raised sections between the rim flanges and the rim well.

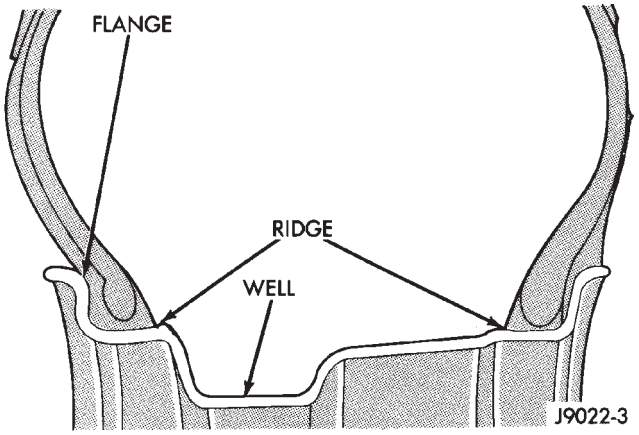

Fig. 1 Wheel Safety Rim

Initial inflation of the tire forces the bead over these raised sections. In case of tire failure, the raised sections hold the tire in position on the wheel until the vehicle can be brought to a safe stop.

Cast aluminum wheels require special balance weights and alignment equipment.

WHEEL INSTALLATION

The wheel studs and nuts are designed for specific applications. They must be replaced with equivalent parts. Do not use replacement parts of lesser quality or a substitute design. All aluminum and some steel wheels have wheel stud nuts which feature an enlarged nose. This enlarged nose is necessary to ensure proper retention of the aluminum wheels.

Before installing the wheel, be sure to remove any build up of corrosion on the wheel mounting surfaces. Ensure wheels are installed with good metal-to-metal contact. Improper installation could cause loosening of wheel nuts. This could affect the safety and handling of your vehicle.

To install the wheel, first position it properly on the mounting surface. All wheel nuts should then be tightened just snug. Gradually tighten them in sequence to 129 N·m (95 ft. lbs.) torque (Fig. 2). **Never use oil or grease on studs or nuts.**

WHEEL REPLACEMENT

Wheels must be replaced if they have:

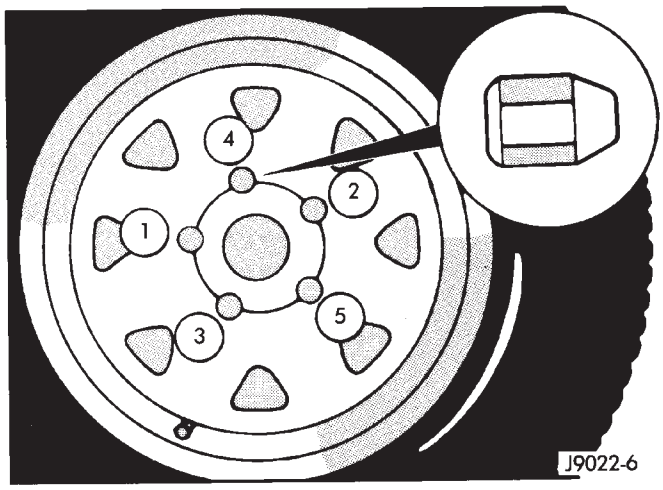

Fig. 2 Lug Nut Tightening Pattern

- Excessive runout
- Bent or dented
- Leak air through welds
- Have damaged bolt holes

Wheel repairs employing hammering, heating, or welding are not allowed.

Original equipment wheels are available through your dealer. Replacement wheels from any other source should be equivalent in:

- Load carrying capacity
- Diameter
- Width
- Offset
- Mounting configuration

Failure to use equivalent replacement wheels may affect the safety and handling of your vehicle. Replacement with **used** wheels is not recommended. Their service history may have included severe treatment.

Refer to the Specifications Chart for information regarding above requirements.

WHEEL ORNAMENTATION

WARNING: HANDLE ALL WHEEL ORNAMENTATION WITH EXTREME CARE DURING REMOVAL AND INSTALLATION. SHARP EDGES ON THE COVERS OR CAPS CAN CAUSE PERSONAL INJURY.

TIRE AND WHEEL BALANCE

It is recommended that a two plane dynamic balancer be used when a wheel and tire assembly require balancing. Static should be used only when a two plane balancer is not available.

For static imbalance, find location of heavy spot causing imbalance. Counter balance wheel directly

opposite the heavy spot. Determine weight required to counterbalance the area of imbalance. Place half of this weight on the **inner** rim flange and the other half on the **outer** rim flange (Fig. 3, Fig. 4). Off-vehicle balancing is necessary.

Wheel balancing can be accomplished with either on or off vehicle equipment. When using on-vehicle balancing equipment, follow these precautions:

- Limited-slip rear axle differential, remove the opposite wheel/tire
- Before balancing the wheels/tires on a vehicle equipped with a transfer case, disconnect the drive shafts

MATCH MOUNTING

Wheels and tires are match mounted at the factory. This means that the high spot of the tire is matched to the low spot on the wheel rim. This technique is used to reduce run-out in the wheel/tire assembly. The high spot on the tire is marked with a paint mark or a bright colored adhesive label on the outboard sidewall. The low spot on the rim is at the valve stem location on the wheel rim.

Before dismounting a tire from its wheel, a reference mark should be placed on the tire at the valve

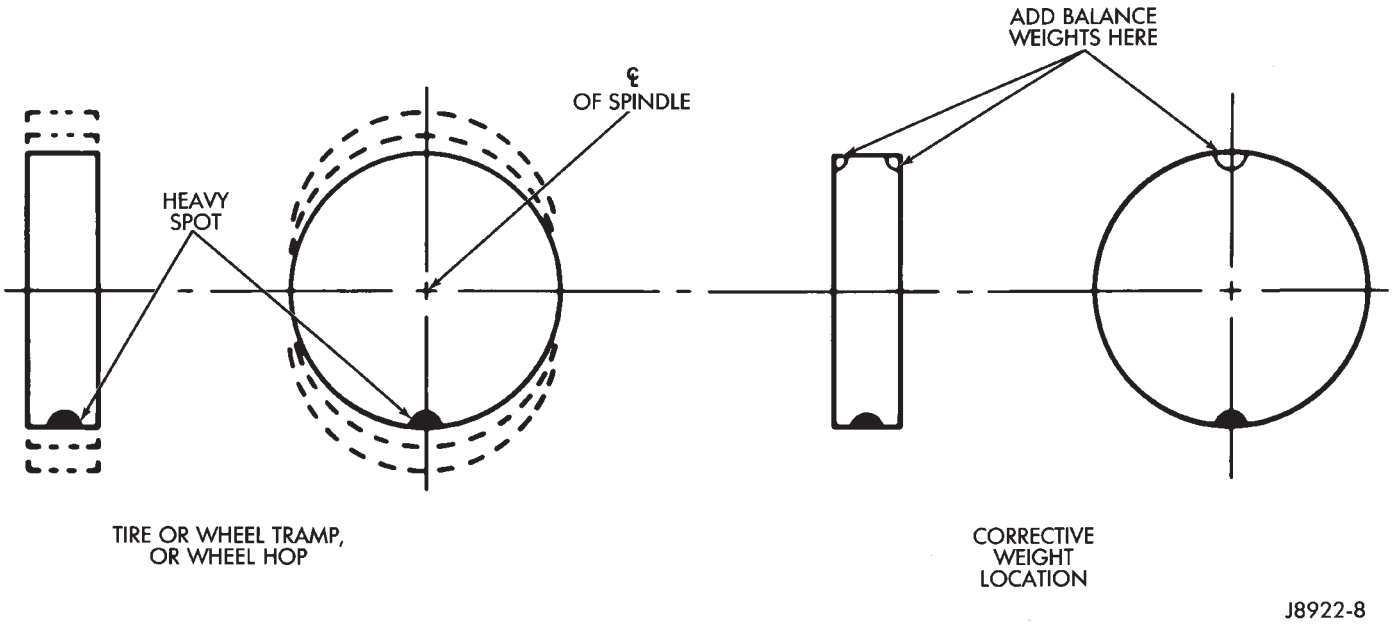

Fig. 3 Static Unbalance & Balance

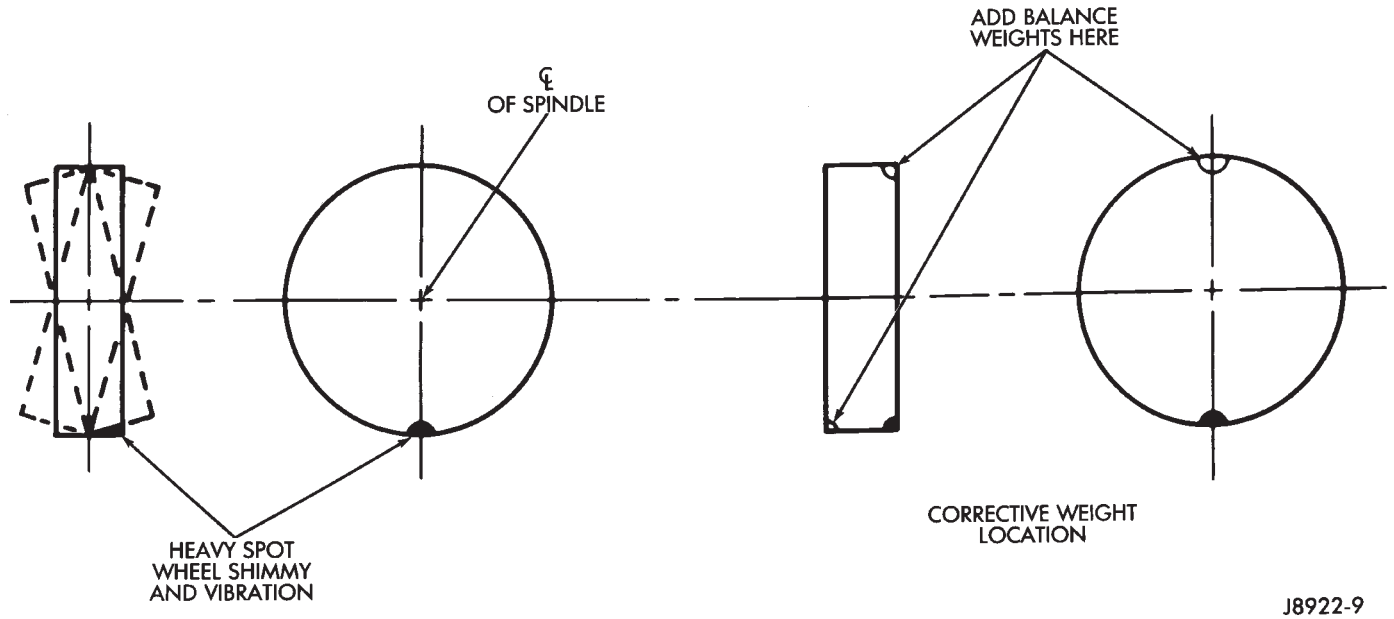

Fig. 4 Dynamic Unbalance & Balance

stem location. This reference will ensure that it is remounted in the original position on the wheel.

(1) Measure the total indicator runout on the center of the tire tread rib. Record the indicator reading. Mark the tire to indicate the high spot. Place a mark on the tire at the valve stem location (Fig. 5).

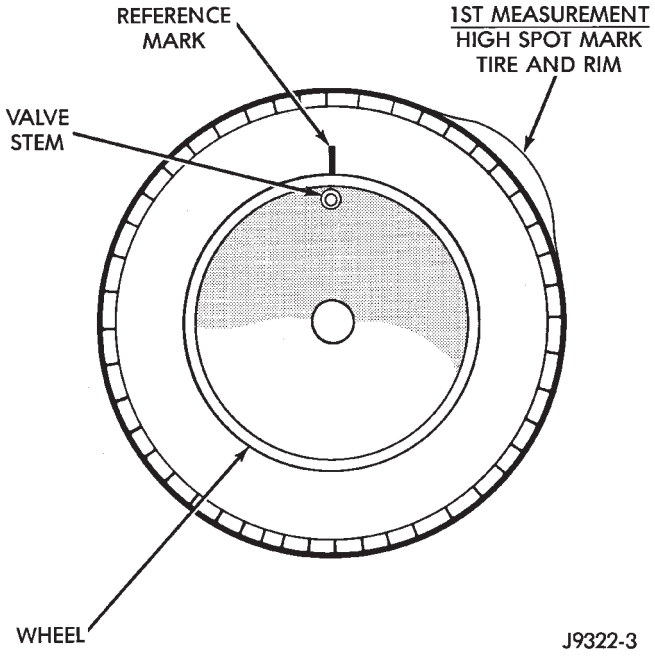

Fig. 5 First Measurement On Tire

(2) Break down the tire and remount it 180 degrees on the rim (Fig. 6).

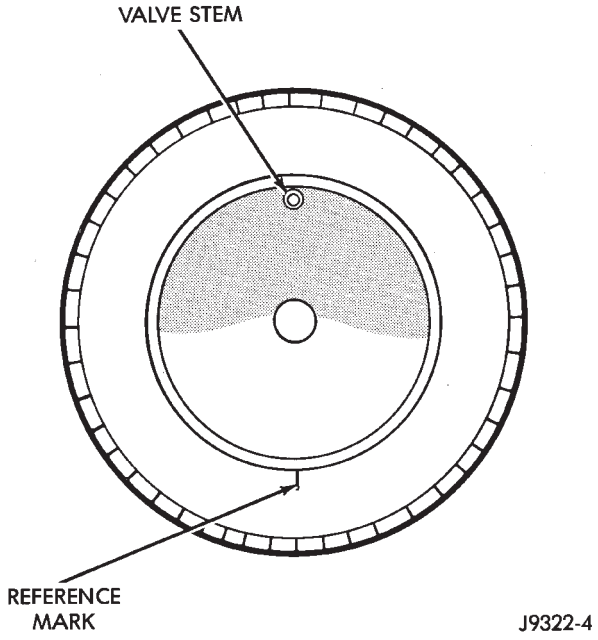

Fig. 6 Remount Tire 180 Degrees

(3) Measure the total indicator runout again. Mark the tire to indicate the high spot.

(4) If runout is still excessive, the following procedures must be done.

- If the high spot is within 101.6 mm (4.0 in.) of the first spot and is still excessive, replace the tire.
- If the high spot is within 101.6 mm (4.0 in.) of the first spot on the wheel, the wheel may be out of specifications. Refer to Wheel and Tire Runout.
- If the high spot is NOT within 101.6 mm (4.0 in.) of either high spot, draw an arrow on the tread from second high spot to first. Break down the tire and remount it 90 degrees on the rim in that direction (Fig. 7). This procedure will normally reduce the runout to an acceptable amount.

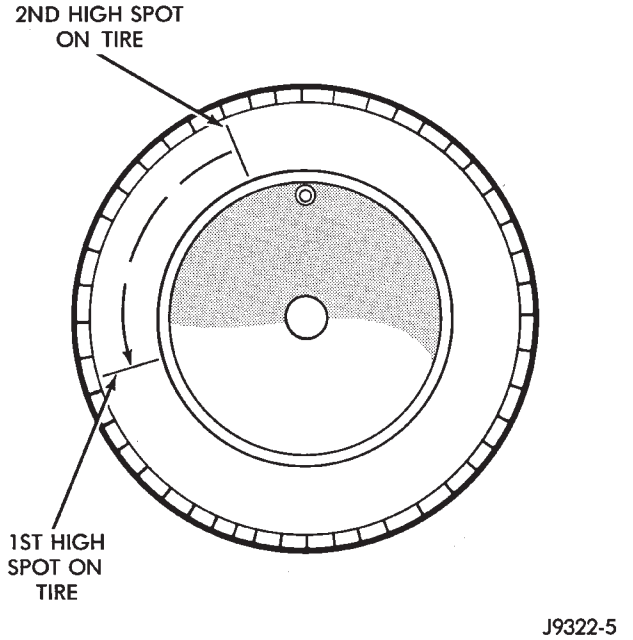

Fig. 7 Remount Tire 90 Degrees In Direction of Arrow

TIRE AND WHEEL RUNOUT

Radial runout is the difference between the high and low points on the tire or wheel (Fig. 8).

Lateral runout is the **wobble** of the tire or wheel.

Radial runout of more than 1.5 mm (.060 inch) measured at the center line of the tread may cause the vehicle to shake.

Lateral runout of more than 2.0 mm (.080 inch) measured near the shoulder of the tire may cause the vehicle to shake.

Sometimes radial runout can be reduced. Relocate the wheel and tire assembly on the mounting studs (See Method 1). If this does not reduce runout to an acceptable level, the tire can be rotated on the wheel. (See Method 2).

METHOD 1 (RELOCATE WHEEL ON HUB)

Check accuracy of the wheel mounting surface; adjust wheel bearings.

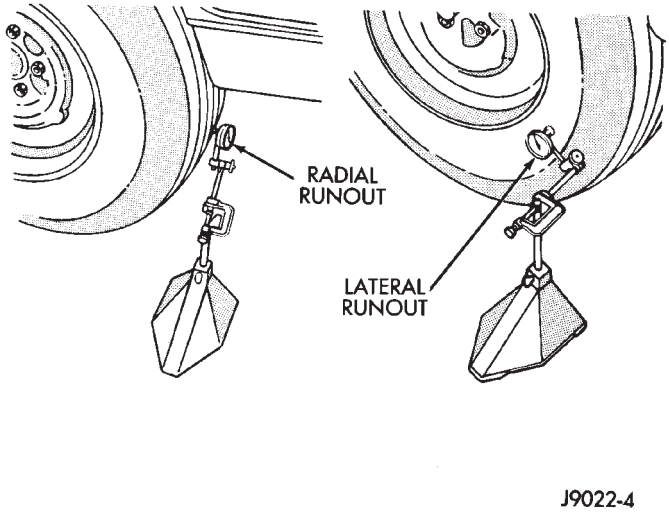

Fig. 8 Checking Tire Runout

Drive vehicle a short distance to eliminate tire flat spotting from a parked position.

Make sure all wheel nuts are properly torqued.

Relocate wheel on the mounting, two studs over from the original position.

Re-tighten wheel nuts until all are properly torqued, to eliminate brake distortion.

Check radial runout. If still excessive, mark tire sidewall, wheel, and stud at point of maximum runout and proceed to Method 2.

METHOD 2 (RELOCATE TIRE ON WHEEL)

Rotating tire on wheel is particularly effective when there is runout in both tire and wheel.

Remove tire from wheel and re-mount wheel on hub in former position.

Check wheel radial runout (Fig. 9).

- STEEL WHEELS: Radial runout 0.040 in., Lateral runout 0.045 in.
- ALUMINUM WHEELS: Radial runout 0.030 in., Lateral runout 0.035 in.

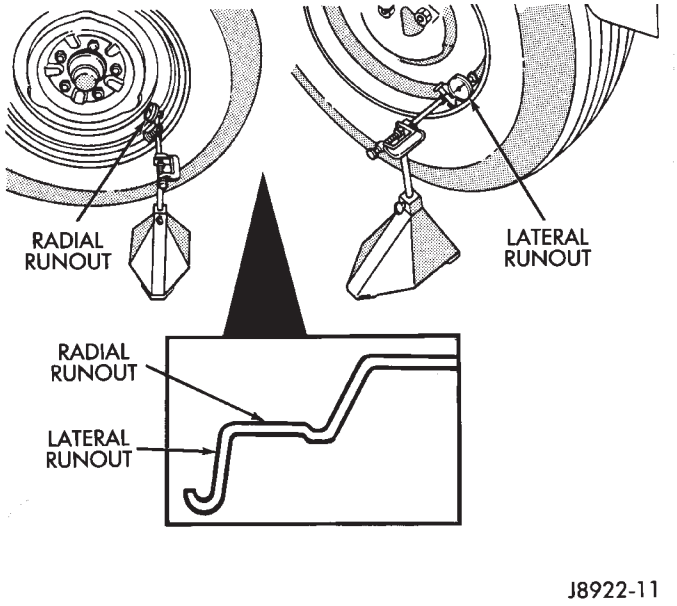

Fig. 9 Checking Wheel Runout

If point of greatest runout is near original chalk mark, remount tire 180 degrees. Recheck runout.

VEHICLE VIBRATION

Vehicle vibration can be caused by:
- Tire/wheel unbalance or excessive runout
- Defective tires with extreme tread wear
- Nylon overlay flat spots (performance tires only)
- Incorrect wheel bearing adjustment (if applicable)
- Loose or worn suspension/steering components
- Certain tire tread patterns
- Incorrect drive shaft angles or excessive drive shaft/yoke runout
- Defective or worn U-joints
- Excessive brake rotor or drum runout
- Loose engine or transmission supports/mounts
- And by engine operated accessories

Refer to the appropriate Groups in this manual for additional information.

VIBRATION TYPES

There are two types of vehicle vibration:
- Mechanical
- Audible.

Mechanical vehicle vibration can be felt through the seats, floor pan and/or steering wheel.

Audible vehicle vibration is heard above normal background noise. The sound can be a droning or drumming noise.

Vibrations are sensitive to change in engine torque, vehicle speed or engine speed.

ENGINE TORQUE SENSITIVE VIBRATION

This vibration can be increased or decreased by:
- Accelerating
- Decelerating
- Coasting
- Maintaining a constant vehicle speed

VEHICLE SPEED SENSITIVE VIBRATION

This vibration condition always occurs at the same vehicle speed regardless of the engine torque or engine speed.

ENGINE SPEED (RPM) SENSITIVE VIBRATION

This vibration occurs at varying engine speeds. It can be isolated by increasing or decreasing the engine speed with the transmission in NEUTRAL position.

VIBRATION DIAGNOSIS

A vibration diagnosis should always begin with a 10 mile (16 km) trip (to warm the vehicle and tires). Then a road test to identify the vibration. Corrective action should not be attempted until the vibration type has been identified via a road test.

During the road test, drive the vehicle on a smooth surface. If vibration exists, note and record the following information:
- Identify the vehicle speed range when the vibration occurs
- Identify the type of vibration
- Identify the vibration sensitivity
- Determine if the vibration is affected by changes in vehicle speed, engine speed and engine torque.

When the vibration has been identified, refer to the Vibration Diagnosis chart for causes. Consider correcting only those causes coded in the chart that are related to the vibration condition.

Refer to the following cause codes and descriptions for explanations when referring to the chart.

TRR—Tire and Wheel Radial Runout: Vehicle speed sensitive, mechanical vibration. The runout will not cause vibration below 20 mph (32 km/h).

WH—Wheel Hop: Vehicle speed sensitive, mechanical vibration. The wheel hop generates rapid up-down movement in the steering wheel. The vibration is most noticeable in the 20 - 40 mph (32 - 64 km/h) range. The wheel hop will not cause vibration below 20 mph (32 km/h). Wheel hop is caused by a tire/wheel that has a radial runout of more than 0.045 of-an-inch (1.14 mm). If wheel runout is acceptable and combined runout cannot be reduced by repositioning the tire on wheel, replace tire.

TB—Tire/Wheel Balance: Vehicle speed sensitive, mechanical vibration. Static tire/wheel unbalance will not cause vibration below 30 mph (46 km/h). Dynamic tire/wheel unbalance will not cause vibration below 40 mph (64 km/h).

TLR—Tire/Wheel Lateral runout: Vehicle speed sensitive, mechanical vibration. The runout will not cause vibration below 50 - 55 mph (80 - 88 km/h). Excessive lateral runout will also cause front-end shimmy.

TW—Tire Wear: Vehicle speed sensitive, audible vibration. Abnormal tire wear causes small vibration in the 30 - 55 mph (88 km/h) range. This will produce a whine noise at high speed. The whine will change to a growl noise when the speed is reduced.

W—Tire Waddle: Vehicle speed sensitive, mechanical vibration. Irregular tire uniformity can cause side-to-side motion during speeds up to 15 mph (24 km/h). If the motion is excessive, identify the defective tire and replace it.

UAJ—Universal Joint (Drive Shaft) Angles: Torque/vehicle speed sensitive, mechanical/audible vibration. Incorrect drive shaft angles cause mechanical vibration below 20 mph (32 km/h) and in the 70 mph (112 km/h) range. The incorrect angles can also produce an audible vibration in the 20 - 50 mph (32 - 80 km/h) range. Caster adjustment could be required to correct the angles.

UJ—Universal Joints: Engine torque/vehicle speed sensitive, mechanical/audible vibration. If the

VIBRATION DIAGNOSIS

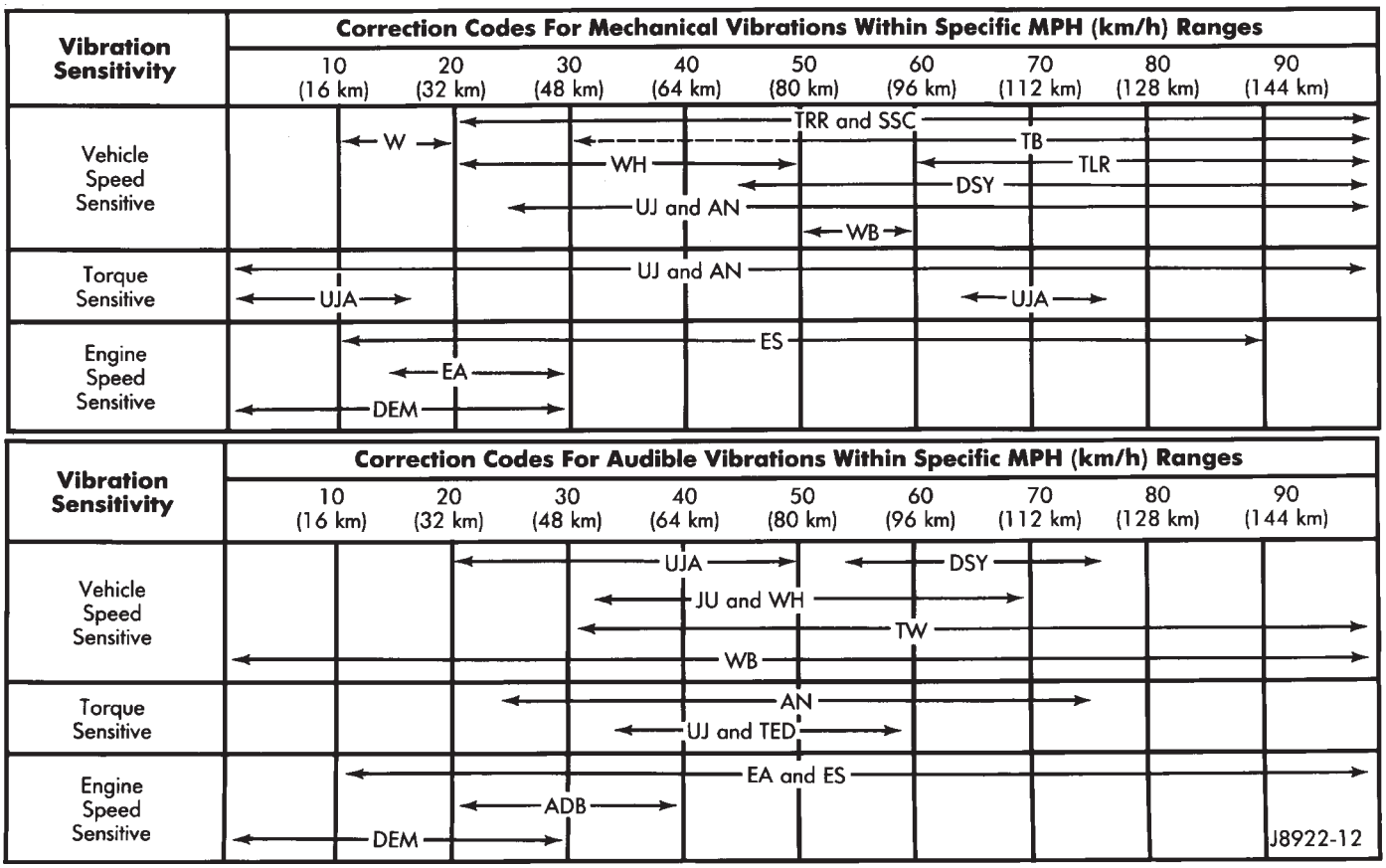

U-joint is worn it will cause vibration with almost any vehicle speed/engine torque condition.

DSY—Drive Shaft and Yokes: Vehicle speed sensitive, mechanical/audible vibration. The condition will not cause vibration below 35 mph (56 km/h). Excessive runout, unbalance or dents and bends in the shaft will cause the vibration. Identify the actual cause and repair/replace as necessary.

WB—Wheel Bearings: Vehicle speed sensitive, mechanical/audible vibration. Loose wheel bearings cause shimmy-like vibration at 35 mph (56 km/h) and above. Worn bearings will also produce a growl noise at low vehicle speed and a whine noise at high vehicle speed. The wheel bearings must be adjusted or replaced, as applicable.

AN—Axle Noise: Engine torque/vehicle speed sensitive, mechanical/audible vibration. The axle will not cause mechanical vibration unless the axle shaft is bent. Worn or damaged axle pinion shaft or differential gears and bearings will cause noise. Replace the defective component(s) as necessary.

SSC—Suspension and Steering Components: Vehicle speed sensitive, mechanical vibration. Worn suspension/steering components can cause mechanical vibration at speeds above 20 mph (32 km/h). Identify and repair or replace the defective component(s).

EA—Engine Driven Accessories: Engine speed sensitive, mechanical/audible vibration. Vibration can be caused by loose or broken A/C compressor, PS pump, water pump, generator or brackets, etc. Usually more noticeable when the transmission is shifted into the NEUTRAL position and the engine speed (rpm) increased. Inspect the engine driven accessories in the engine compartment. Repair/replace as necessary.

ADB—Accessory Drive Belts: Engine speed sensitive, audible vibration. Worn drive belts can cause a vibration that produces either a droning, fluttering or rumbling noise. Inspect the drive belt(s) and tighten/replace as necessary.

DEM—Damaged Engine or Transmission Support Mounts: Engine speed sensitive, mechanical/audible vibration. If a support mount is worn, noise or vibration will occur. Inspect the support mounts and repair/replace as necessary.

ES—Exhaust System: Engine speed sensitive, mechanical/audible vibration. If loose exhaust components contact the vehicle body they will cause noise and vibration. Inspect the exhaust system for loose, broken and mis-aligned components and repair/replace as necessary.

SPECIFICATIONS

WHEEL LUG NUT

DESCRIPTION	TORQUE
1/2 x 20 with 60° Cone	109 to 150 N·m (80 to 110 ft. lbs.)

J9322-7

BODY COMPONENTS—XJ VEHICLES

CONTENTS

	page		page
DOORS	30	INTERIOR COMPONENTS	80
EXTERIOR COMPONENTS	3	STATIONARY WINDOW GLASS	66
GENERAL BODY SERVICE INFORMATION	1	TRAILER HITCH	77

GENERAL BODY SERVICE INFORMATION

RIGHT HAND DRIVE VEHICLES

The XJ Body Components procedures in this section were developed on a left hand drive (LHD) vehicle. Unless a component is unique to a right hand drive vehicle, it will not be specifically covered in this section, i.e. cargo barrier. In general, components on left hand drive vehicles will be located on the opposite side in right hand drive vehicles.

LABELS/DECALS/PLATES—XJ

Most of the labels that are affixed to the vehicles (Fig. 1 through 5) contain safety or maintenance information. If a body component or window glass are replaced, a replacement label should be installed. In most cases, label location on right hand drive (RHD) vehicles will be on the opposite side of the vehicle.

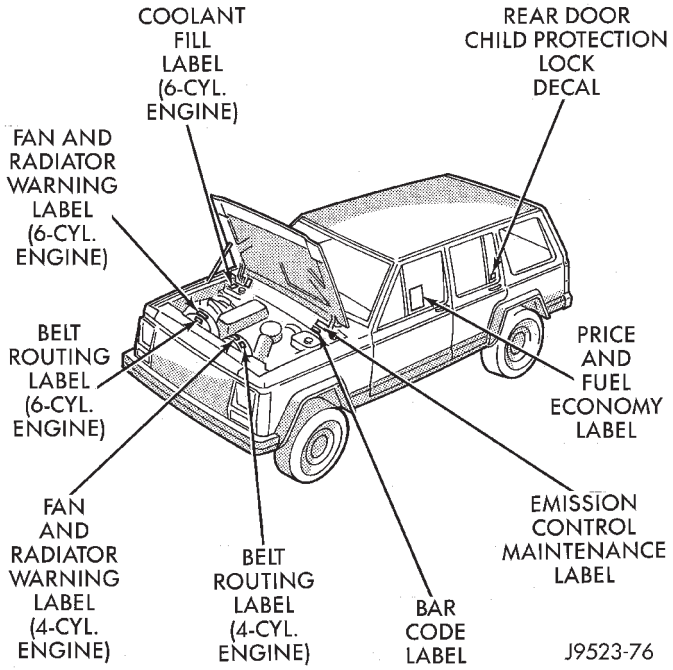

Fig. 1 XJ Underhood & Window Glass Labels/Decals

Refer to the Introduction of this manual for more information involving labels and plates.

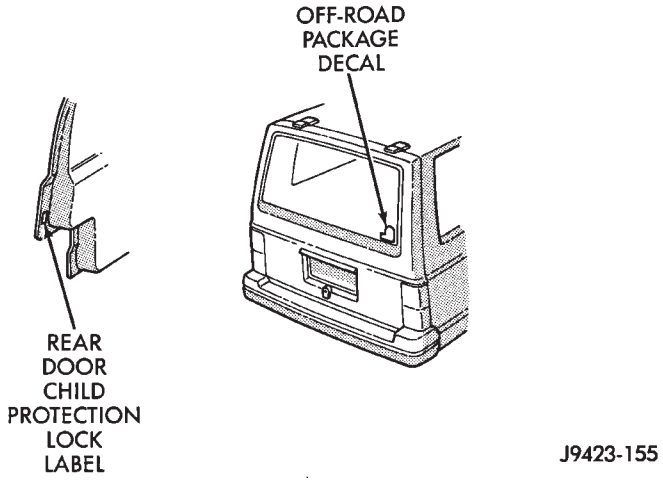

Fig. 2 XJ Exterior Labels/Decals

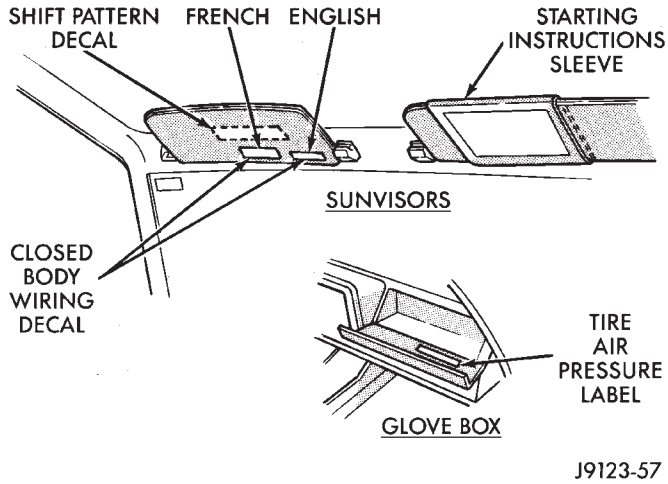

Fig. 3 XJ Interior Labels/Decals

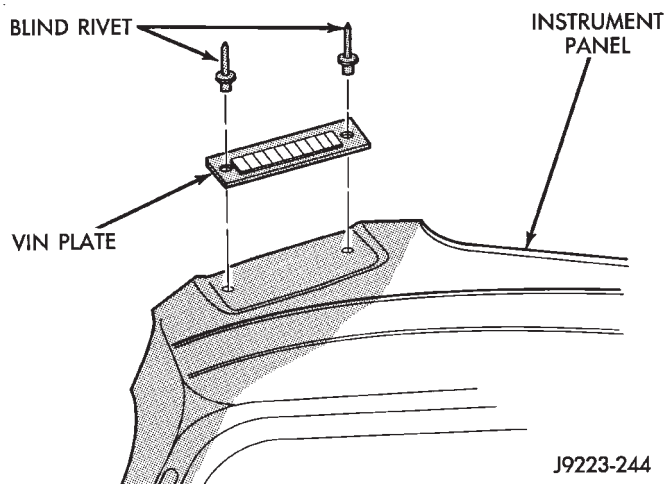

Fig. 4 XJ VIN Plate

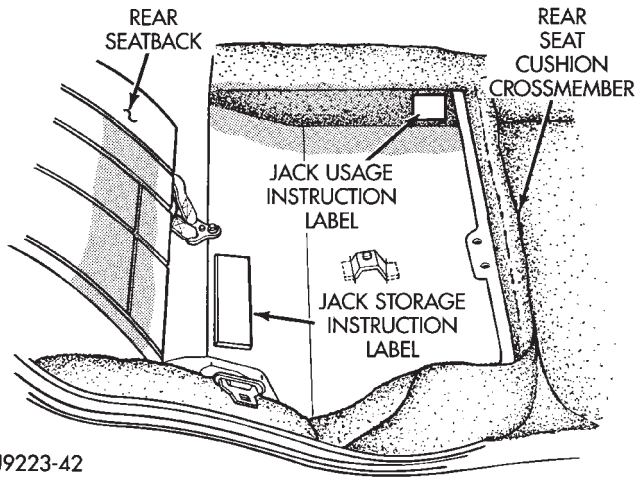

Fig. 5 XJ Jack Usage & Storage Instruction Labels

EXTERIOR COMPONENTS

INDEX

	page
Air Exhaust Grille—XJ	25
Battery Tray—XJ	14
Body Side Molding/Cladding—XJ	20
Body Stripes/Decals—XJ	21
Brush Guard—XJ	3
Cowl Grille and Screen—XJ	12
Cowl Weatherstrip Seal/Crossmember Air Deflector—XJ	11
Dash Panel Insulator Panel—XJ	12
Drip Rail Molding—XJ	25
Exterior Nameplates—XJ	26
External Mirrors—XJ	27
Front Fender—XJ	14
Fuel Filler Door Bumpers—XJ	27
Fuel Filler Nozzle/Tube—XJ	26
Grille and Grille Opening Panel (GOP)—XJ	3
Hood Adjustment—XJ	10
Hood Hinge Replacement—XJ	10
Hood Latch Replacement—XJ	11
Hood Latch Striker Replacement—XJ	11
Hood—XJ	7
Latch Release Cable Replacement—XJ	11
Luggage Rack—XJ	28
Quarter Window Applique—XJ	25
Radiator Support Crossmember—XJ	6
Rear Wheelhouse Flares and Liners—XJ	19
Safety Latch Striker Replacement—XJ	11

BRUSH GUARD—XJ

REMOVAL

(1) Remove the bolts and washers that attach the brush guard (Fig. 1) to the side sills.

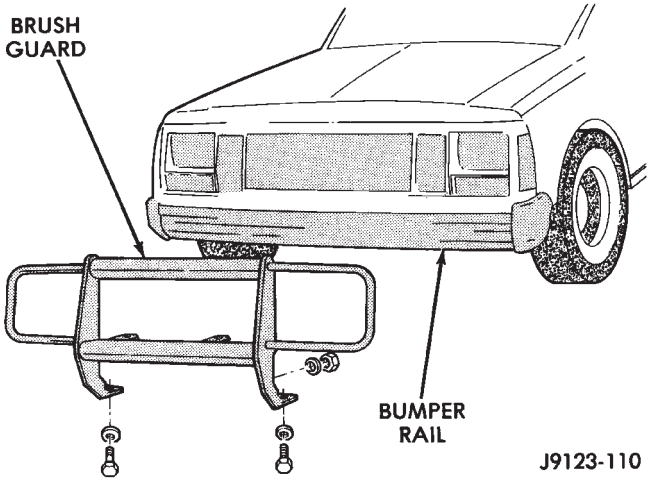

Fig. 1 Brush Guard Removal/Installation

(2) Remove the nuts and washers that the attach brush guard to the bumper. Remove the brush guard from the bumper.

INSTALLATION

(1) Position and support the brush guard on the bumper. Install the attaching washers and nuts.

Do not tighten the nuts until the brush guard is properly positioned on the vehicle and aligned.

(2) Install the bolts and washers to attach the brush guard to side sills.

(3) Align the brush guard and tighten the bolts.

GRILLE AND GRILLE OPENING PANEL (GOP)—XJ

REMOVAL

(1) Remove the screws and grille (Fig. 2) from the grille opening panel (GOP).

(2) Remove the screws, side marker lenses and the headlamp bezels from the grille opening panel (GOP) (Fig. 3).

(3) Remove the headlamps and park/turn signal lamps from the GOP (Fig. 4).

(4) Open the hood.

(5) Remove the nuts that attach the grille opening panel (GOP) to the bracket on radiator support crossmember.

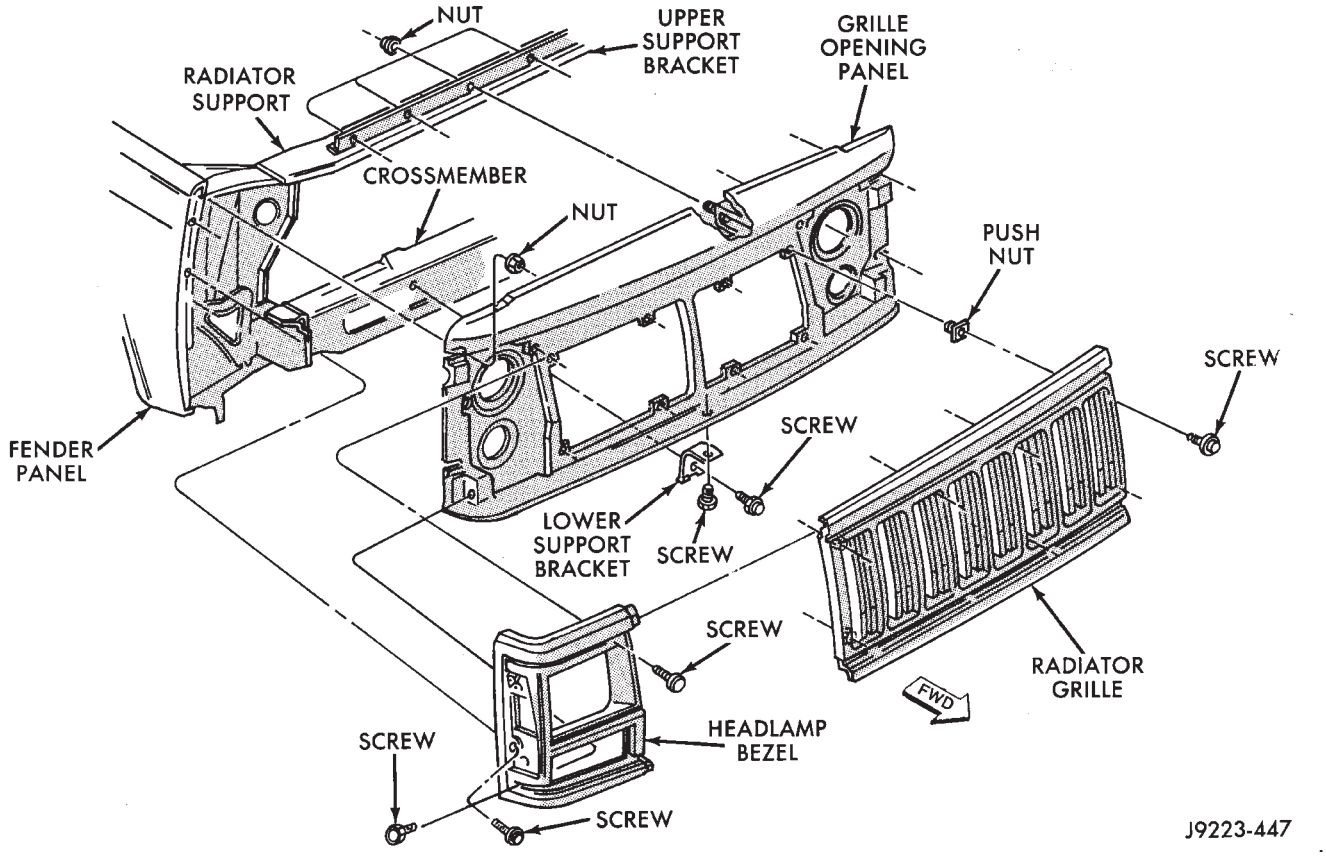

Fig. 2 Grille & GOP

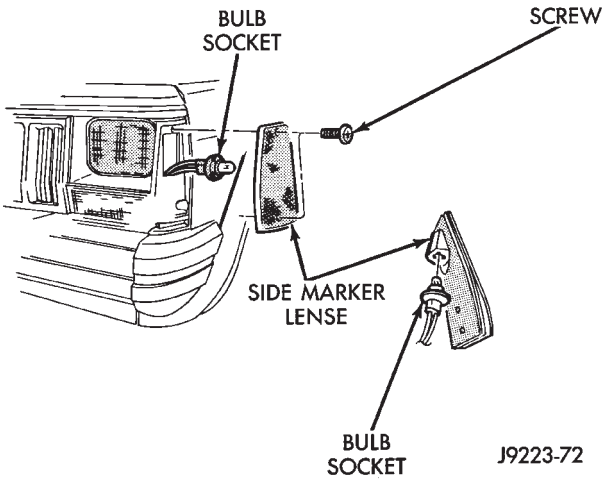

Fig. 3 Side Marker Lamp Removal/Installation

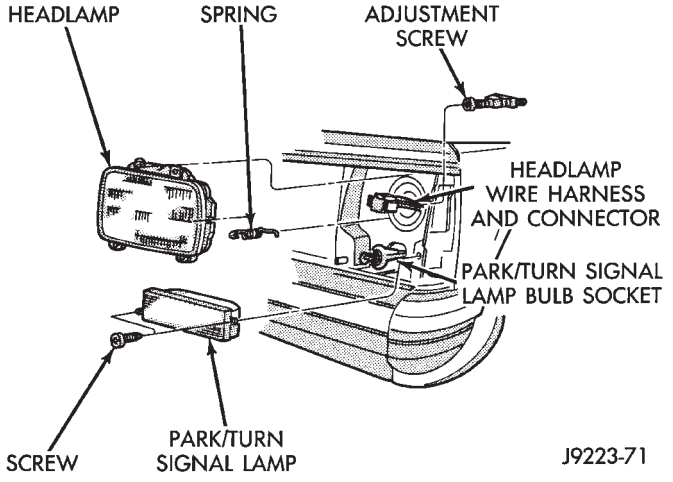

Fig. 4 Headlamp & Park/Turn Signal Lamp Removal/ Installation

(6) Remove the nuts that attach the grille opening panel (GOP) to the front fenders (Fig. 5).

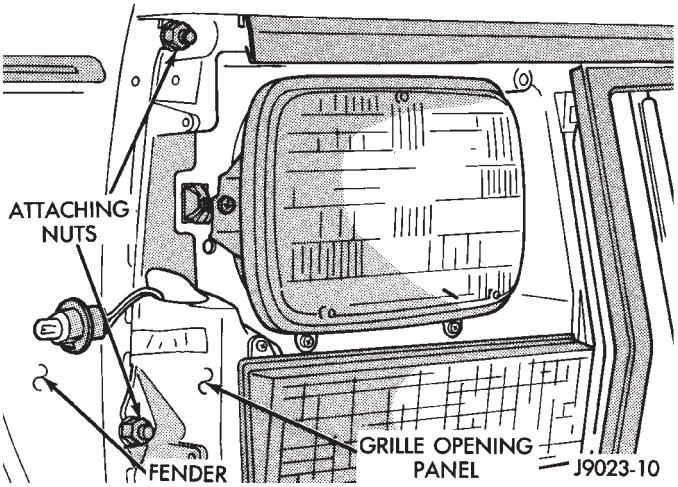

Fig. 5 GOP Attaching Nuts At Front Fender

(7) Remove the screws that attach the grille opening panel (GOP) support bracket to the front sill crossmember (Fig. 6).

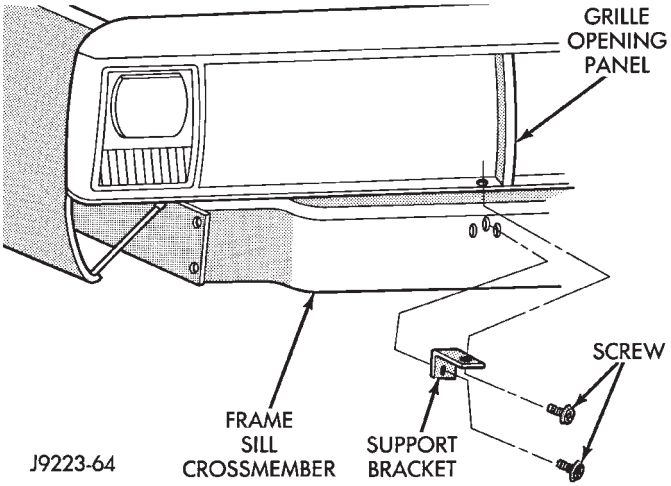

Fig. 6 Crossmember-to-GOP Support Bracket

(8) Pull the grille opening panel (GOP) forward and disconnect the clips and all the front lamp harness connectors (Fig. 7).

(9) Remove the grille opening panel (GOP) from the vehicle.

(10) If necessary, remove the air inlet baffles from GOP (Fig. 8).

INSTALLATION

(1) Place the grille opening panel (GOP) on bumper and connect all front lamp wire harness connectors.

(2) Position the grille opening panel (GOP) on the vehicle and install the side and upper nuts. Tighten nuts to 7 N·m (58 in-lbs) torque.

(3) Install the screw to attach grille opening panel (GOP) to the crossmember support bracket. Tighten the screw to 1 N·m (11 in-lbs) torque.

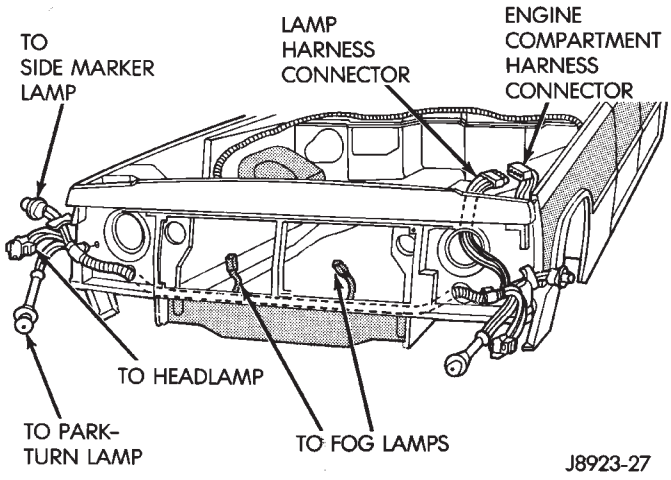

Fig. 7 Front Lamp Wire Harness Connectors

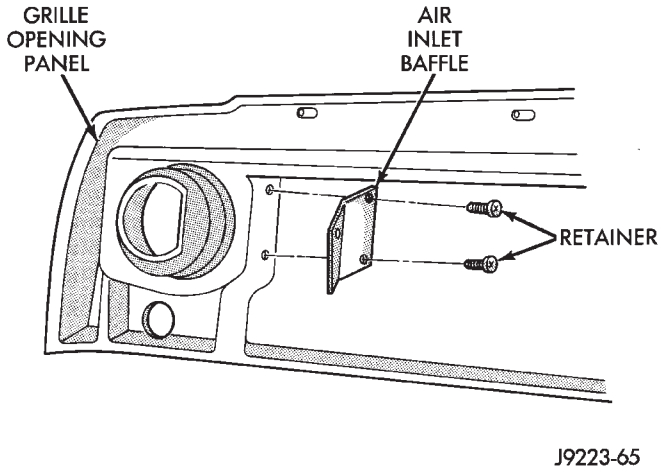

Fig. 8 GOP Air Inlet Baffles

(4) Install headlamps and park/turn signal lamps in GOP.

(5) Install the headlamp bezels on the GOP. Tighten the screws to 1 N·m (13 in-lbs) torque.

(6) Install the side marker lenses and screws on the grille opening panel (GOP). Tighten the screws to 1 N·m (13 in-lbs) torque.

(7) Install the grille on the GOP. Tighten screws to 1 N·m (13 in-lbs) torque.

(8) Adjust the headlamp aim, if necessary. Refer to the headlamp beam adjustment procedure within Group 8L.

RADIATOR SUPPORT CROSSMEMBER—XJ

REMOVAL

(1) Remove the grille opening panel (GOP).

(2) For 2.5L engines, remove the power steering pump reservoir from the left filler panel (Fig. 9).

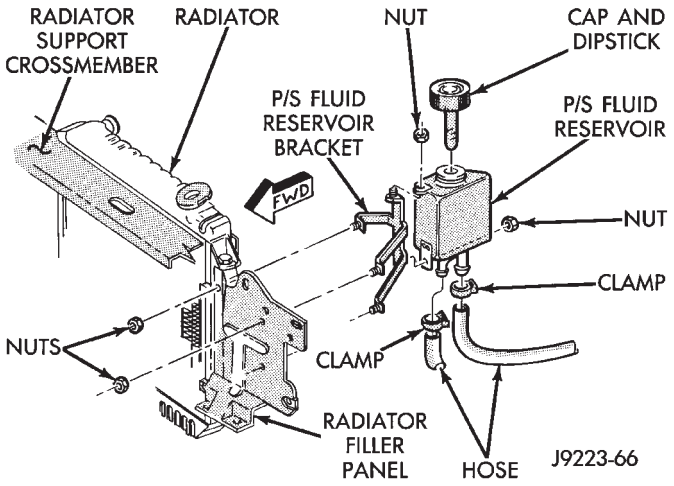

Fig. 9 P/S Pump Reservoir Removal/Installation

(3) Remove the radiator support crossmember and radiator from the front of vehicle (Fig. 10).

(4) If additional disassembly is required, remove the horns, baffle braces and the wire harnesses from the baffles (Fig. 11).

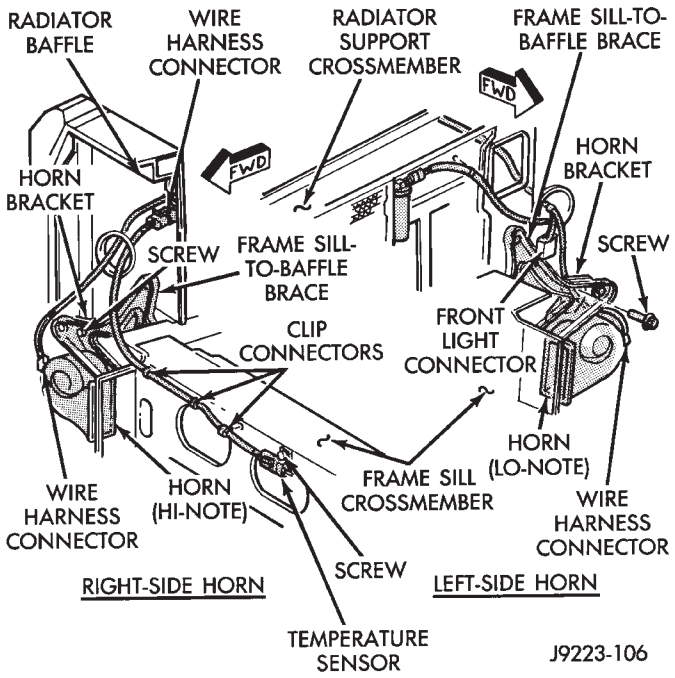

Fig. 11 Horns, Baffle Braces & Wire Harnesses

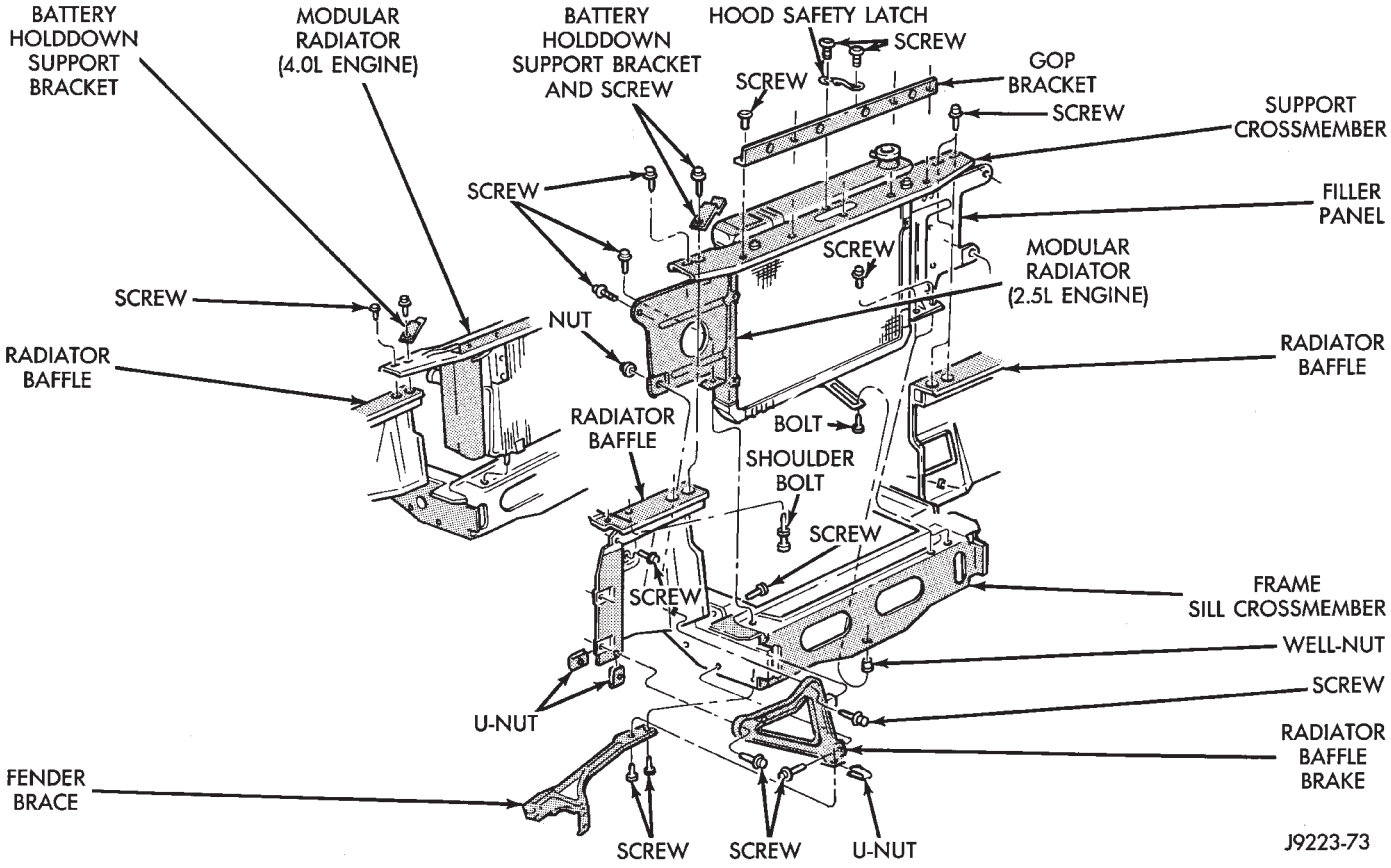

Fig. 10 Radiator Support Crossmember & Modular Radiator

INSTALLATION

(1) If removed, install the horns, baffle braces and the wire harnesses on the baffles (Fig. 11).

(2) Position the radiator and the radiator support crossmember at the front of vehicle (Fig. 10). Install and tighten screws to 9 N·m (76 in-lbs) torque.

(3) For 2.5L engines, install the power steering pump reservoir on the left filler panel (Fig. 9).

(4) Install the grille opening panel (GOP).

HOOD—XJ

The hood service procedures included in this section include:

- Hood removal and installation.
- Hood adjustment.
- Hinge—latch—striker service (Fig. 12).
- Latch release cable service.

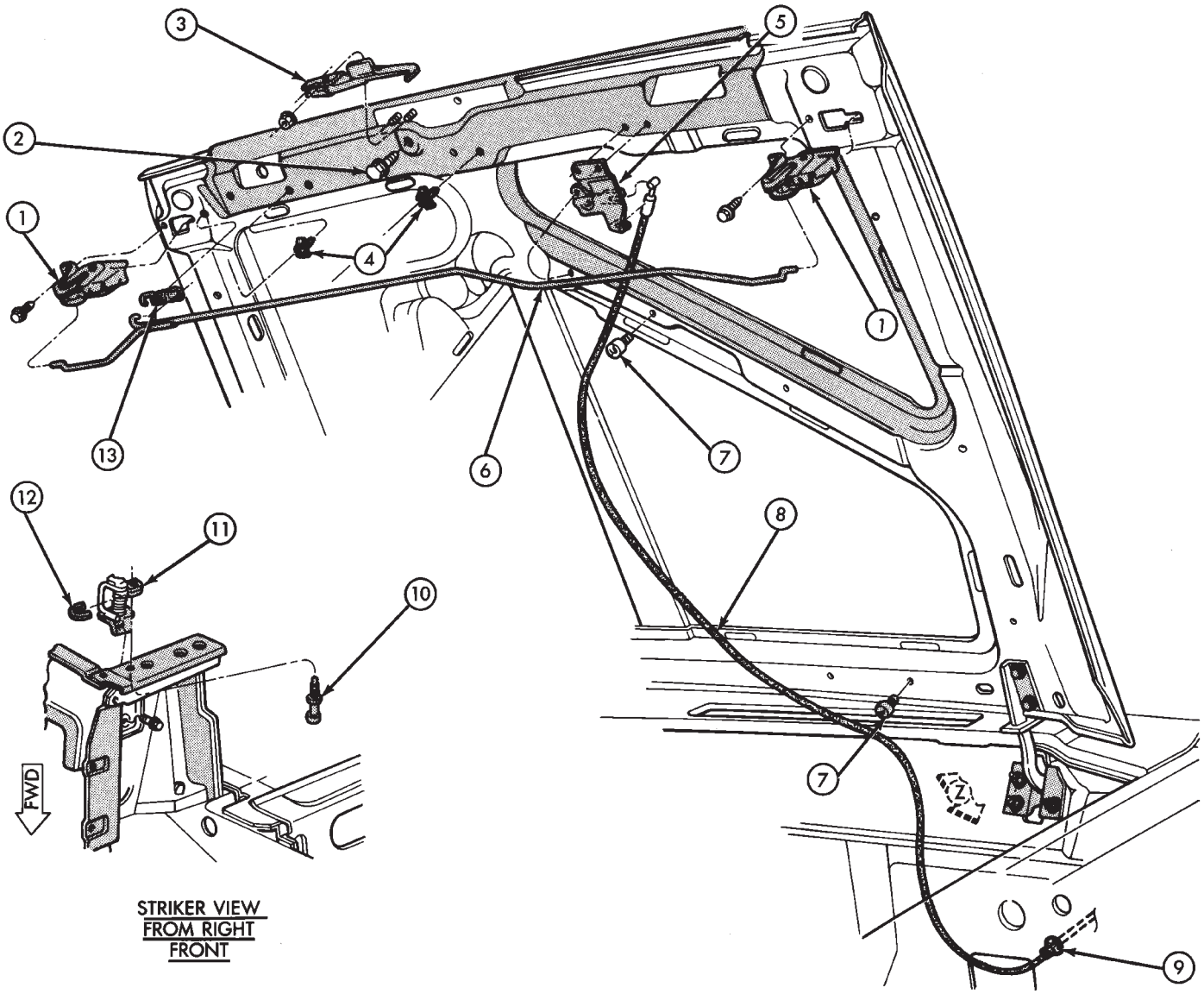

1. LATCH
2. BUMPER
3. CATCH
4. CLIP
5. BELLCRANK
6. ROD
7. CLIP
8. CABLE
9. GROMMET
10. SHOULDER BOLT
11. STRIKER
12. SHIM
13. SPRING

Fig. 12 Hood Latches, Rod, Release Cable, Striker & Safety Latch

HOOD REMOVAL

(1) Raise hood.

(2) Disconnect the underhood lamp wire harness connector, if equipped (Fig. 13).

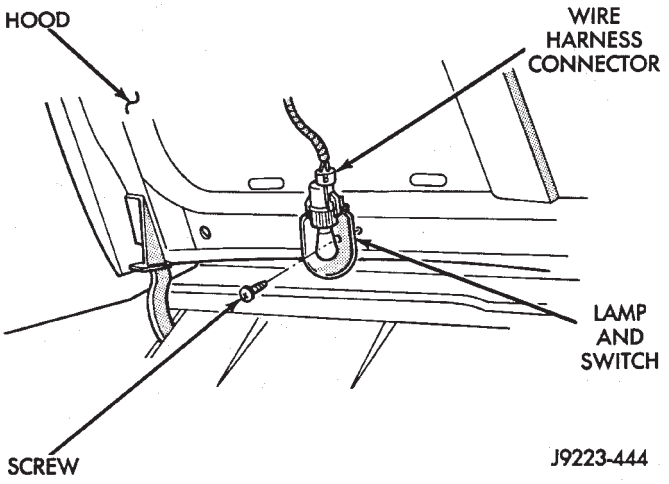

Fig. 13 Underhood Lamp

(3) Drill out and remove the rivets that attach the hood release cable bellcrank to the hood (Fig. 14).

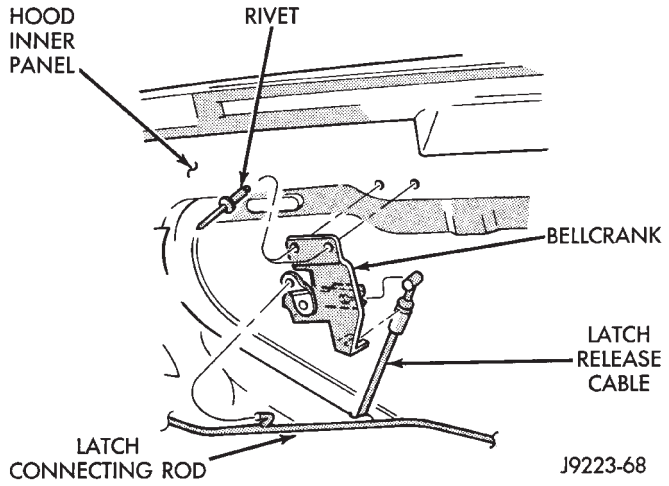

Fig. 14 Hood Release Cable Bellcrank

(4) Disconnect the bellcrank from the latch connecting rod and the release cable. Remove the bellcrank from the hood.

(5) Remove the latch release cable clips and remove the cable from the hood (Fig. 12).

(6) Remove the screws that attach the latches to the hood (Fig. 15).

(7) Disconnect the latches from the hood and latch connecting rod. Remove the latches from the hood.

(8) Remove the nuts that attach the safety latch to the hood. Remove the safety latch from the hood.

(9) Remove the clips and latch connecting rod from the hood.

(10) Mark the location of hood, the hinges and the hinge shims for installation (Fig. 16).

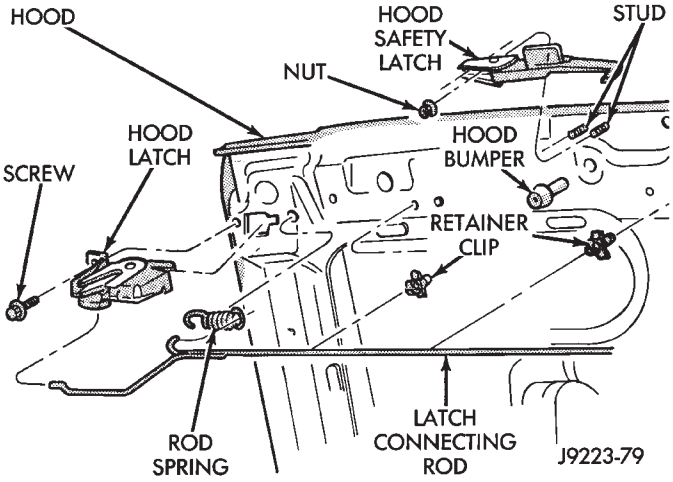

Fig. 15 Hood Latch & Safety Latch

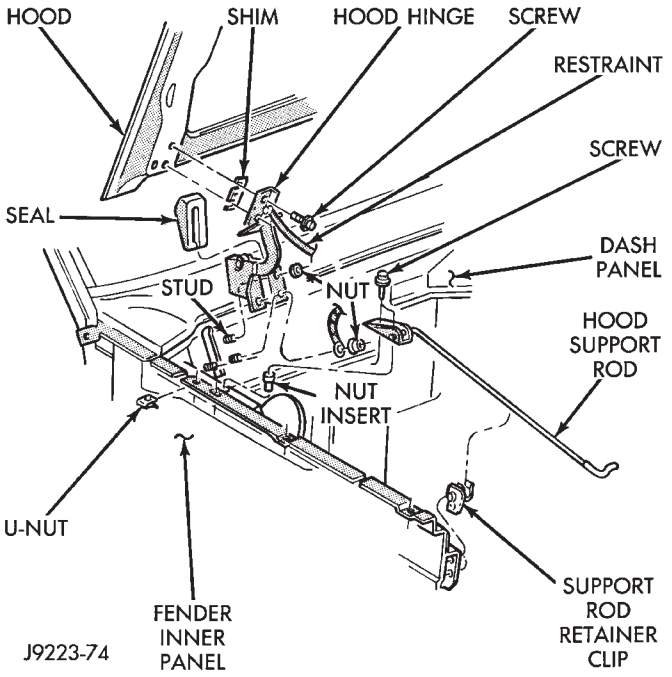

Fig. 16 Hood Hinges and Support Rod

(11) Remove the screws that attach the hinges to the hood. Remove the hood from the vehicle with the aid of a helper.

(12) Remove the insulation panel from the hood (Fig. 17).

HOOD INSTALLATION

(1) Install the insulation panel on the hood.

(2) Position the hood on the shims and hinges; finger-tighten the hinge bolts.

(3) Align the hinges and shims with the reference marks. Tighten the hinge bolts to 30 N·m (22 ft-lbs) torque.

(4) Connect the latch release cable and latch connecting rod to the bellcrank.

(5) Position the bellcrank on the hood and install the rivets.

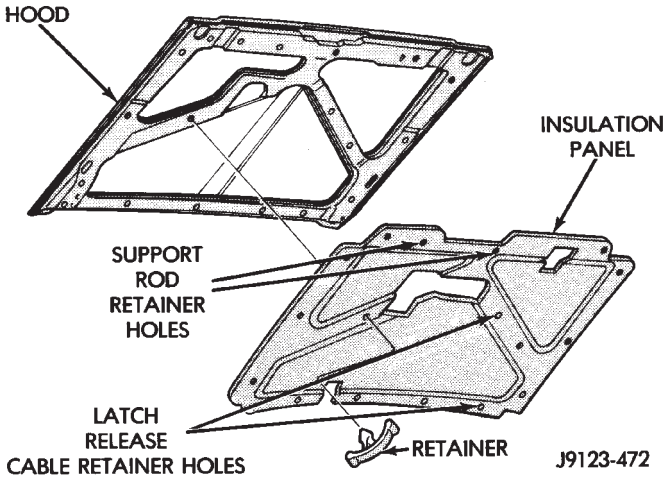

Fig. 17 Hood Insulation Panel

(6) Attach the latch release cable to the clips.

(7) Connect the latches to the latch rod and position them on the hood.

(8) Install the screws to attach the latches to the hood.

Tighten the screws to 9 N·m (77 in-lbs) torque.

(9) Position the safety latch on the hood and install the attaching nuts. Tighten the screws to 13 N·m (115 in-lbs) torque.

(10) Test latch release cable and latches for proper operation.

(11) Connect the underhood lamp wire harness connector.

(12) Inspect the hood for proper alignment and adjust as necessary.

HOOD ADJUSTMENT—XJ

The hood bolt holes are elongated for fore and aft and side-to-side adjustment.

(1) If hood is low to the cowl panel, insert shims between the hinge and hood at the rear hinge bolts.

(2) Adjust the hood bumper (Fig. 18) in or out to provide proper hood-to-fender height alignment.

(3) Adjust the hood strikers (Fig. 19) with shims as necessary. Tighten the screws to 22 N·m (16 ft-lbs) torque after adjustment.

(4) Align each latch and striker so that the striker enters latch squarely.

HOOD HINGE REPLACEMENT—XJ

REMOVAL

(1) Remove the hood from the vehicle.

(2) Remove the seal from the hinge base (Fig. 20).

(3) Remove the hinge retaining nuts from the studs.

(4) Remove the restraint cable and hinge from the cowl panel.

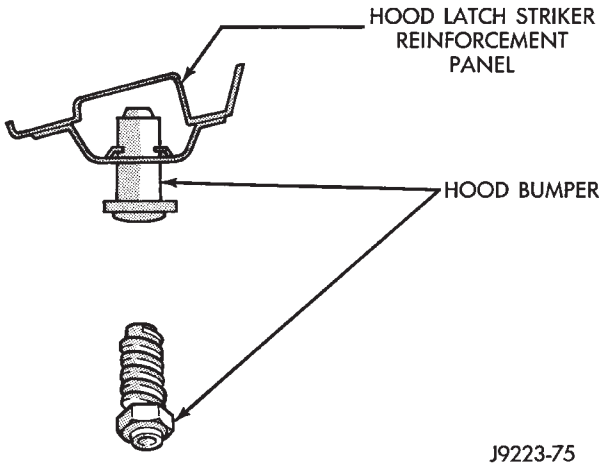

Fig. 18 Hood Bumper

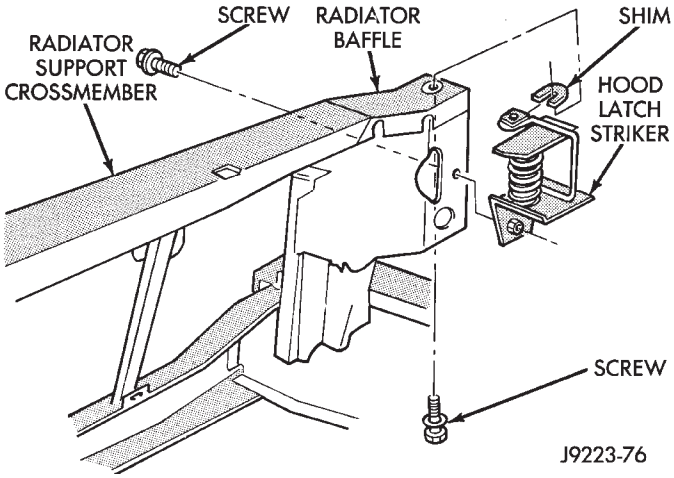

Fig. 19 Hood Latch Striker

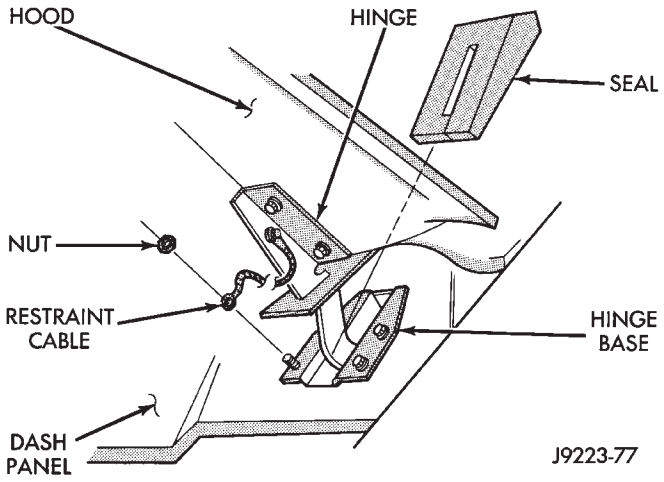

Fig. 20 Hood Hinge and Seal

INSTALLATION

(1) Position the hinge over the studs and place the restraint cable on the right side, lower stud.

(2) Install the hinge nuts on the studs. Tighten the restraint cable nut to 4 N·m (38 in-lbs) torque. Tighten the remaining nuts to 9 N·m (77 in-lbs) torque.

If a replacement hinge seal is being installed, position it around the hinge arm, force it against the hinge base.

(3) Position the hinge seal around the hinge arm and on hinge base.

(4) Install the hood.

(5) Adjust the hood as necessary.

HOOD LATCH REPLACEMENT—XJ

REMOVAL

(1) Remove the screw that attaches the latch to the hood inner panel (Fig. 15).

(2) Disconnect the latch from the hood and latch connecting rod. Remove the latch from the hood.

INSTALLATION

(1) Connect the latch to the latch connecting rod and position it on the hood inner panel.

(2) Install the screw that attaches the latch to the hood inner panel.

(3) Tighten the screw to 9 N·m (77 in-lbs) torque.

(4) Test the operation of the latch release cable and latch.

HOOD LATCH STRIKER REPLACEMENT—XJ

REMOVE

(1) Remove the grille opening panel (GOP).

(2) Remove the screws that attach the striker to the radiator baffle (Fig. 19).

(3) Remove the striker and shims from the baffle.

INSTALLATION

(1) Position the shims and striker on the radiator baffle and install the screws.

(2) Tighten the screws to 21 N·m (15 ft-lbs) torque.

(3) Test the striker/hood alignment by opening and closing the hood several times. Adjust the striker, if necessary.

LATCH RELEASE CABLE REPLACEMENT—XJ

REMOVAL

(1) Drill out the bellcrank to hood rivet heads and remove the rivets (Fig. 14).

(2) Disconnect the bellcrank from the latch rod and the latch release cable. Remove the bellcrank from the hood.

(3) Disconnect the latch release cable from the clips on the hood.

(4) Remove the left cowl side trim panel.

(5) Remove the cable bracket screws from the cowl side panel.

(6) Pull the cable through the dash panel and remove it from under the instrument panel.

INSTALLATION

(1) Insert the replacement cable end through the hole in the dash panel into the engine compartment.

(2) Pull the cable forward and seat the grommet in the dash panel.

(3) Position the cable bracket on the cowl side panel and install the screws. Tighten the screws to 13 N·m (111 in-lbs) torque.

(4) Install the left cowl side trim panel.

(5) Connect the cable and latch rod to the bellcrank.

(6) Position the bellcrank on the hood and install the rivets.

(7) Attach the cable to the clips.

(8) Test release the cable for proper operation.

SAFETY LATCH STRIKER REPLACEMENT—XJ

REMOVAL

(1) Remove the striker screws from the radiator support crossmember (Fig. 21).

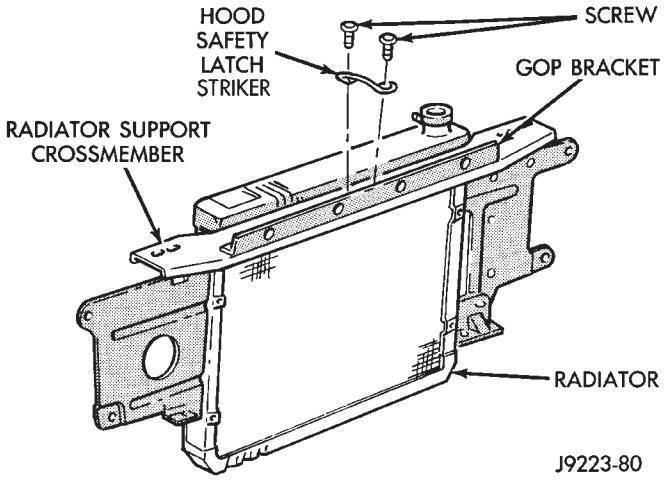

Fig. 21 Hood Safety Latch Striker—2.5L Engine (Typical)

(2) Remove the striker from the crossmember.

INSTALLATION

(1) Position the striker on the radiator support crossmember and install the screws. Tighten the screws to 9 N·m (77 in-lbs) torque.

(2) Test the safety latch operation.

COWL WEATHERSTRIP SEAL/CROSSMEMBER AIR DEFLECTOR—XJ

WEATHERSTRIP SEAL REPLACEMENT

(1) Pry upward along the length of seal (Fig. 22).

(2) Detach the seal retainers from the cowl panel.

(3) Remove the seal from cowl panel.

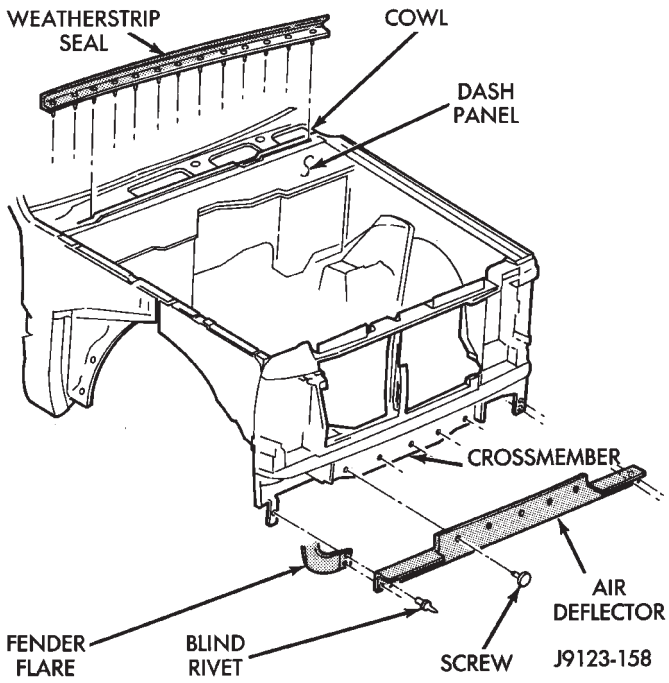

Fig. 22 Cowl Seal and Crossmember Air Deflector

(4) Position the weatherstrip seal on the cowl panel. Press to insert retainers into the cowl panel holes (Fig. 23).

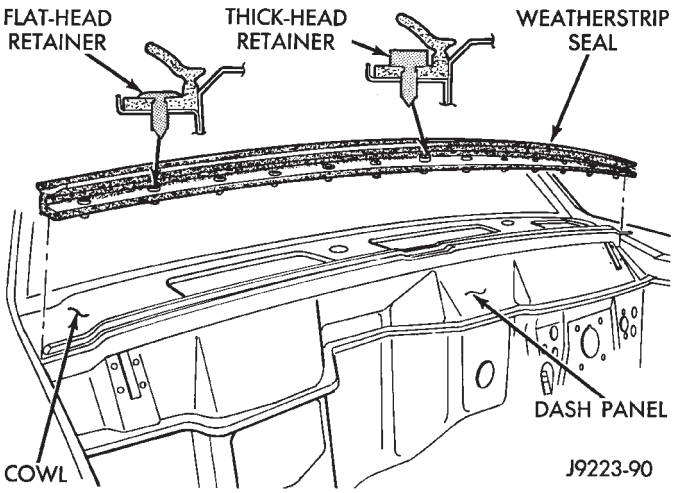

Fig. 23 Cowl Seal and Retainers

CROSSMEMBER AIR DEFLECTOR REMOVAL

(1) Remove the rivets that attach the air deflector to the fender flares (Fig. 22).

(2) Remove screws that attach air deflector to the crossmember.

(3) Remove the air deflector from the crossmember.

CROSSMEMBER AIR DEFLECTOR INSTALLATION

(1) Position the air deflector on the crossmember.

(2) Attach the air deflector to the crossmember with the screws.

(3) Attach the air deflector to the fender flares with blind rivets.

DASH PANEL INSULATOR PANEL—XJ

REMOVAL

(1) Remove the push-on nuts from the studs (Fig. 24).

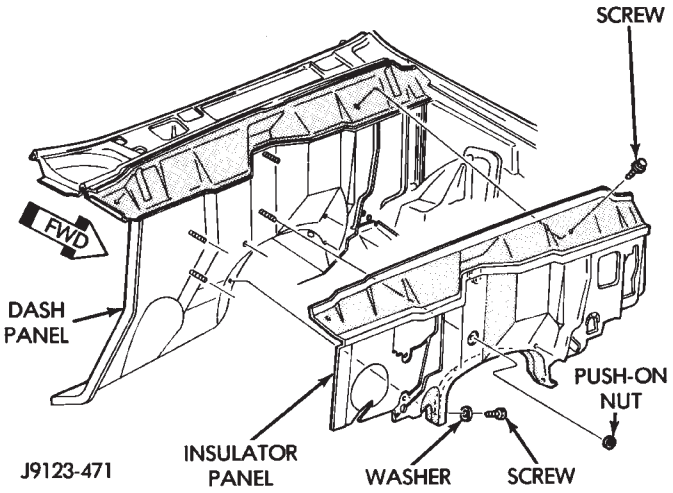

Fig. 24 Dash Panel Insulator Panel

(2) Remove the screws that attach the panel to the dash panel.

(3) Remove the insulator panel from the dash panel and engine compartment.

INSTALLATION

(1) Position the insulator panel on the dash panel.

(2) Install the push-on nuts on the studs.

(3) Attach the panel to the dash panel with screws. Tighten the screws to 2 N·m (18 in-lbs) torque.

COWL GRILLE AND SCREEN—XJ

REMOVAL

(1) Use a wax pencil to mark the position of the wiper arms (Fig. 25).

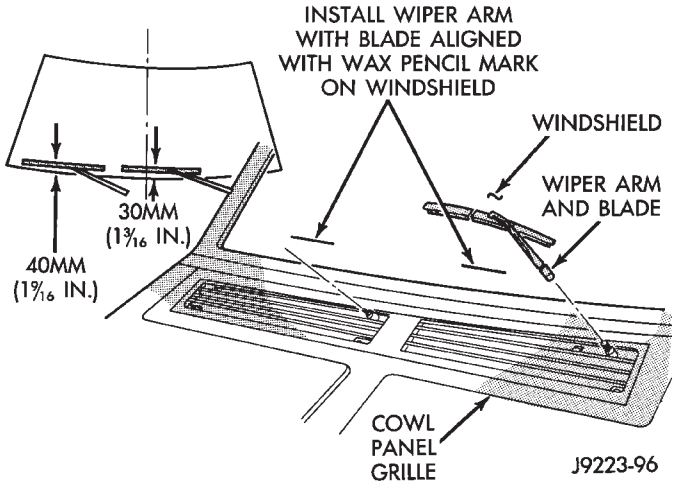

Fig. 25 Wiper Locations On Windshield

(2) Remove the windshield wiper arms from the pivots (Fig. 26).

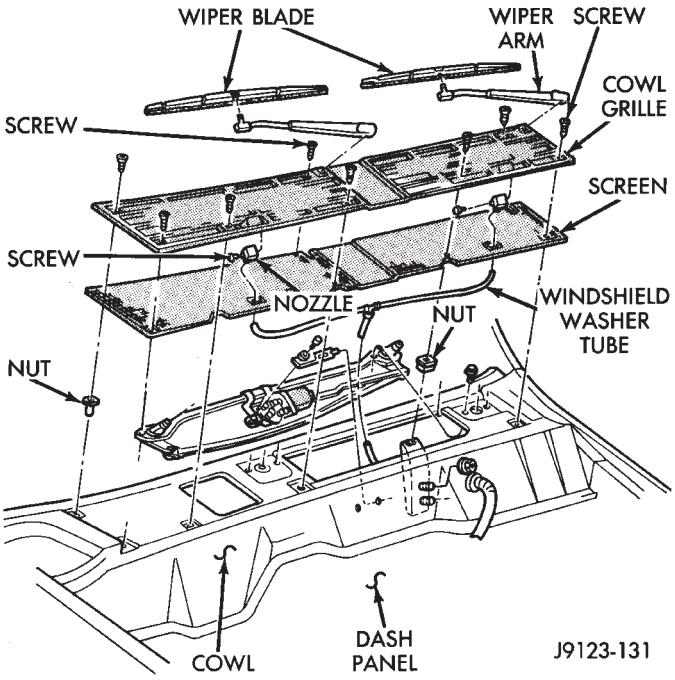

Fig. 26 Cowl Grille Components

(3) Remove the screws that attach the grille to the cowl.

(3) Remove the windshield washer tubes from the nozzles (Fig. 27).

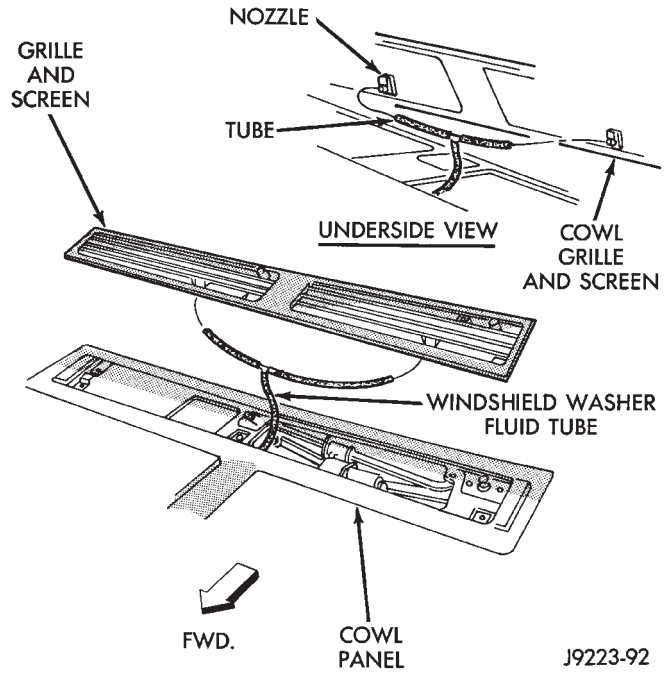

Fig. 27 Washer Fluid Tubes

(4) Remove the cowl grille and screen from the cowl (Fig. 28).

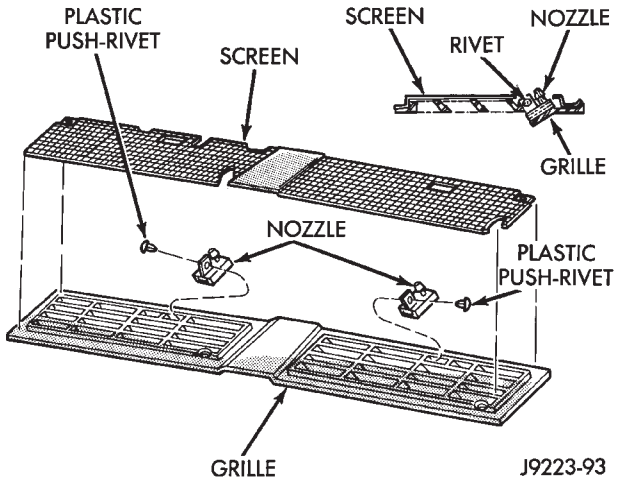

Fig. 28 Cowl Grille, Screen & Washer Nozzles

(5) If necessary, remove the push-rivets and washer nozzles from the cowl grille (Fig. 28).

(6) If necessary, remove the cowl grille push-nuts from the cowl panel (Fig. 29).

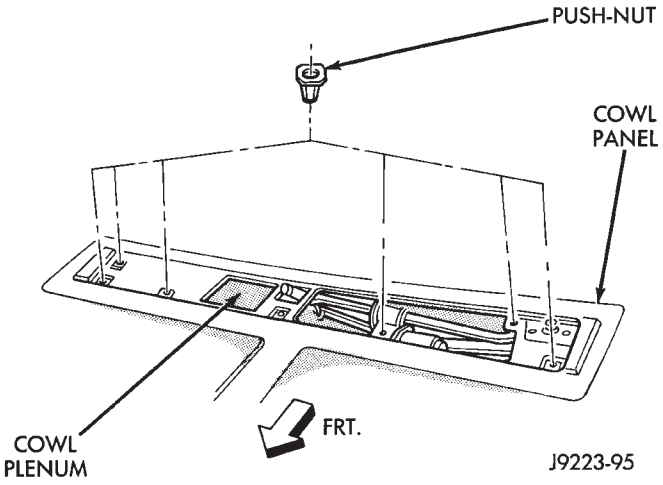

Fig. 29 Cowl Grille Push-Nuts

(7) If necessary, remove the nuts and cowl grille support bracket from the dash panel (Fig. 30).

INSTALLATION

(1) If removed, install the cowl grille support bracket on the dash panel (Fig. 30). Tighten the nuts to 9 N·m (77 in-lbs) torque.

(2) If removed, install the push-nuts in the cowl panel and the support bracket.

(3) If removed, install the push-rivets and washer nozzles in the cowl grille.

CAUTION: The washer fluid tubes must be routed and installed so that they are not pinched.

(4) Position the cowl grille and screen on the cowl. Install the windshield washer tubes on the nozzles.

(5) Install the cowl screen and grille screws. Tighten in sequence (Fig. 31).

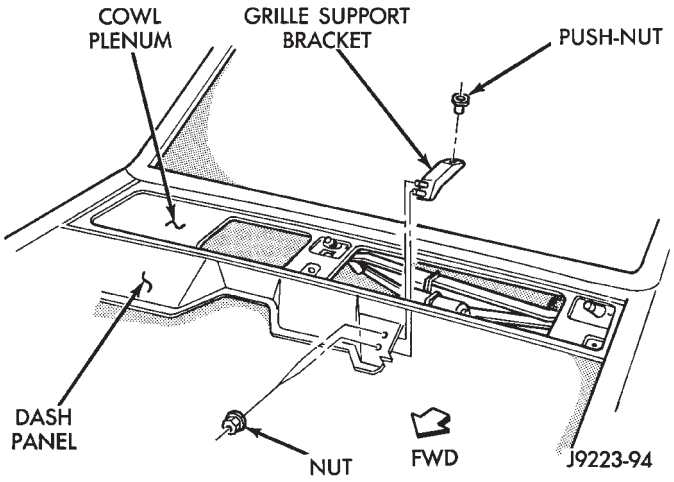

Fig. 30 Cowl Grille Support Bracket

Force the cowl grille rearward while tightening the screws.

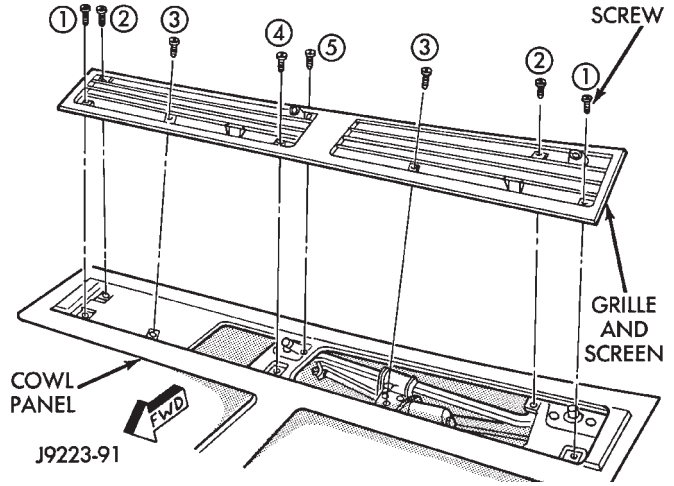

Fig. 31 Cowl Grille Screw Tightening Sequence

(6) Install the windshield wiper arms on the pivots.

BATTERY TRAY—XJ

REMOVAL

(1) Remove the screw, nuts, holddown support bracket and upper holddown bracket from the holddown rods (Fig. 32).

(2) Remove the battery from tray.

(3) Remove the nuts that attach battery tray to the inner fender panel.

(4) Remove the battery tray from the vehicle.

(5) If necessary, remove the retainers and holddown rods from the battery tray (Fig. 33).

INSTALLATION

(1) If removed, install side the holddown rods and retainers on the battery tray.

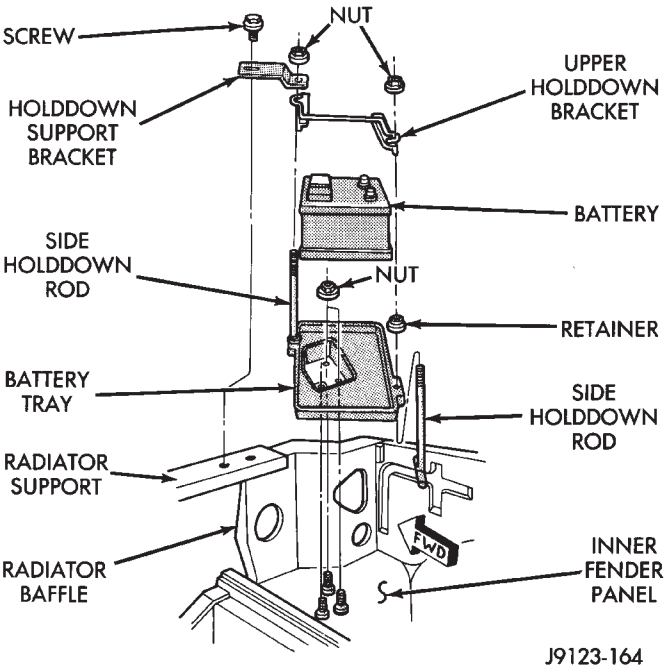

Fig. 32 Battery Tray Removal/Installation

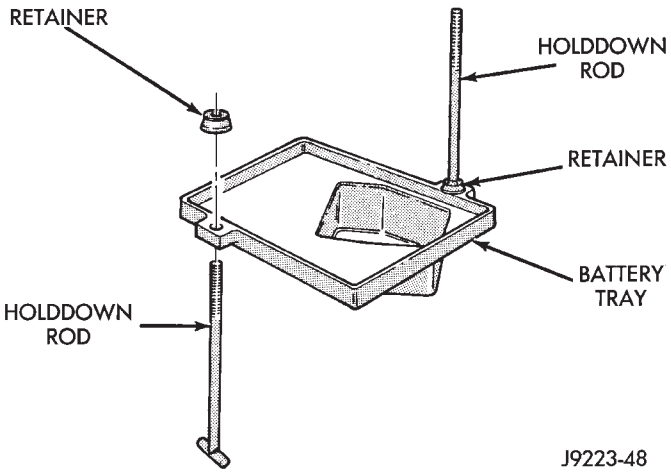

Fig. 33 Battery Holddown Rods & Retainers

(2) Position the battery tray on the inner fender panel with the studs inserted in the holes.

(3) Attach the battery tray to the inner fender panel with the nuts. Tighten the nuts to 30 N·m (22 ft-lbs) torque.

(4) Install the battery in tray.

(5) Position the upper holddown bracket over the holddown rods.

(6) Install the holddown support bracket, screw, and nuts on the holddown rods. Tighten the screw and nuts.

FRONT FENDER—XJ

The following information includes procedures for removal/installation of:

- Fender liner.
- Front fender flare and retainers.

• Front fender.

REMOVAL

(1) Remove the front bumper.
(2) Right fender only:

• If equipped, remove the radio antenna mast, and components from the fender (Fig. 34 and 35).

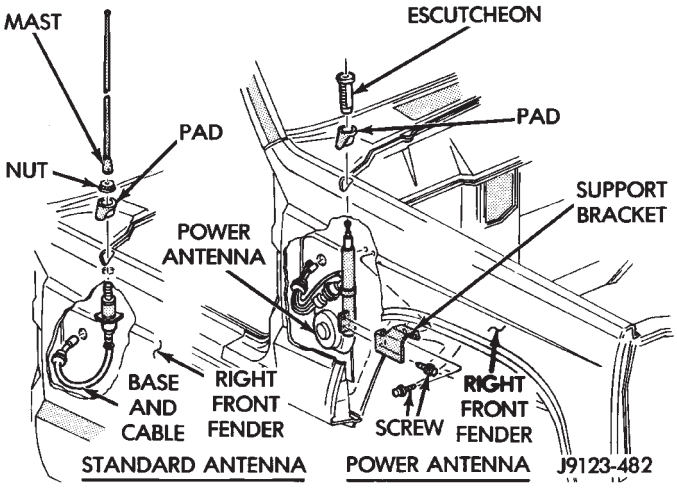

Fig. 34 Radio Antenna Removal/Installation

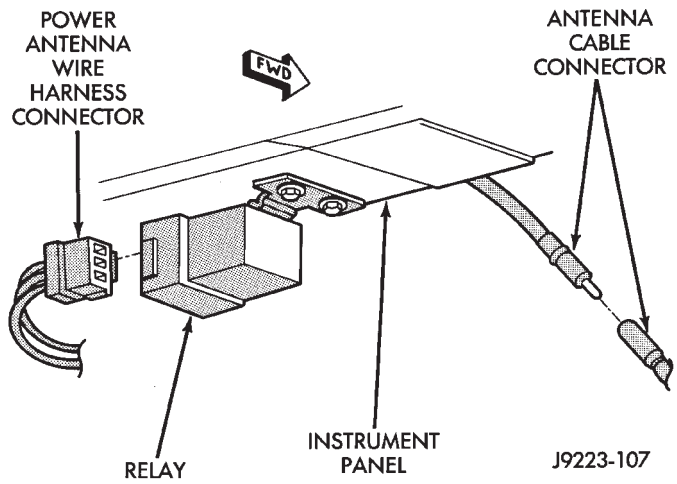

Fig. 35 Power Antenna Wire Harness & Cable Connectors

• Remove the battery and tray from the fender inner panel (Fig. 36, 37 and 38).

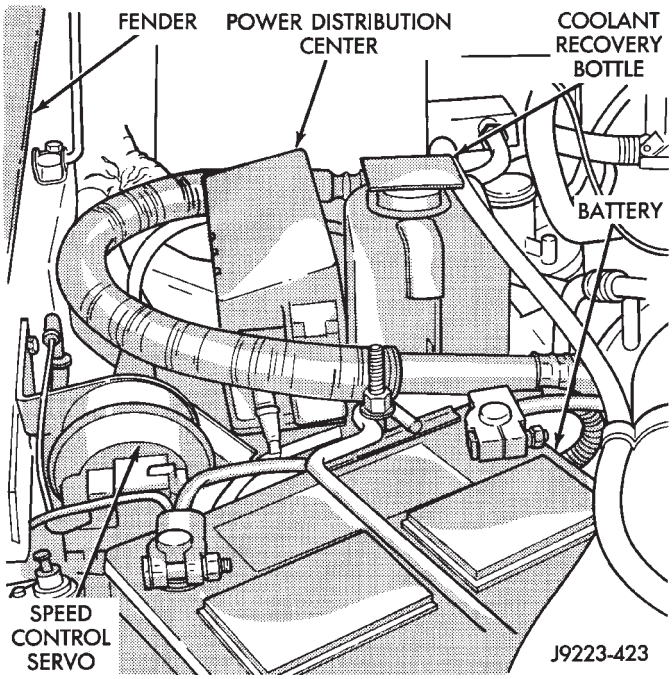

Fig. 36 Battery, Speed Servo, PDC & Coolant Recovery Bottle

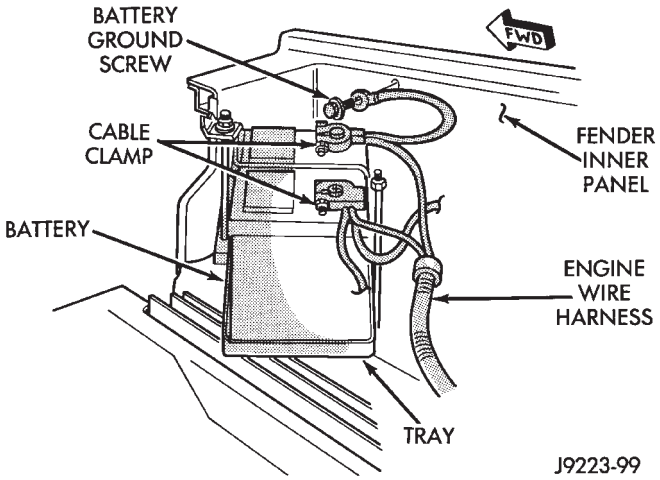

Fig. 37 Battery Removal/Installation

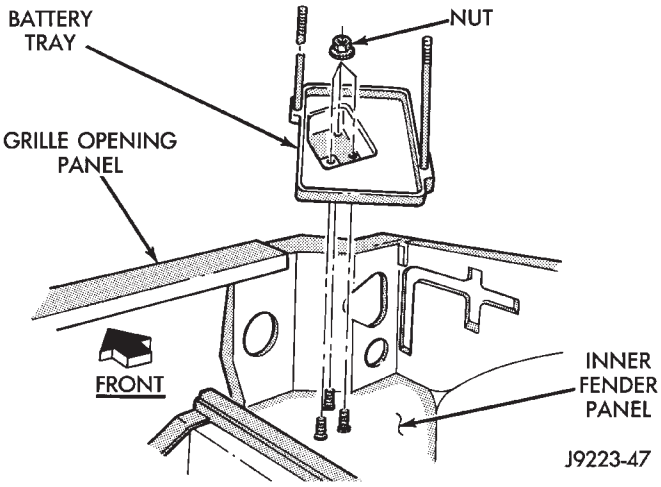

Fig. 38 Battery Tray Removal/Installation

• Remove windshield washer reservoir from fender inner panel (Fig. 39).

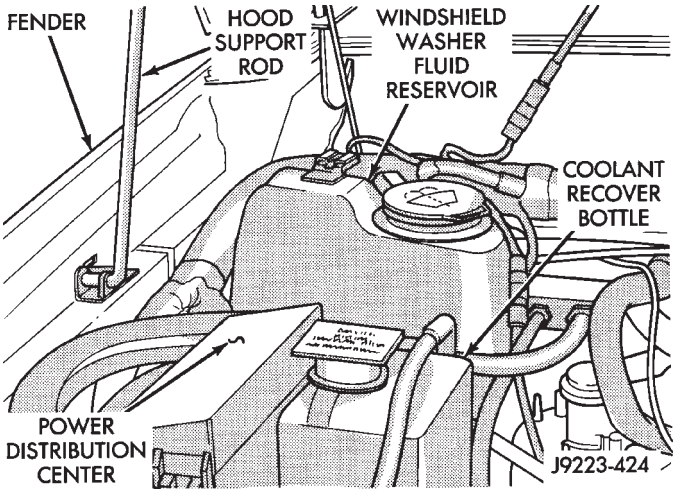

Fig. 39 Coolant Recovery Bottle, Windshield Washer Fluid Reservoir & Hood Support Rod

• Remove the hood ajar switch, if equipped, from fender (Fig. 40 and 41).

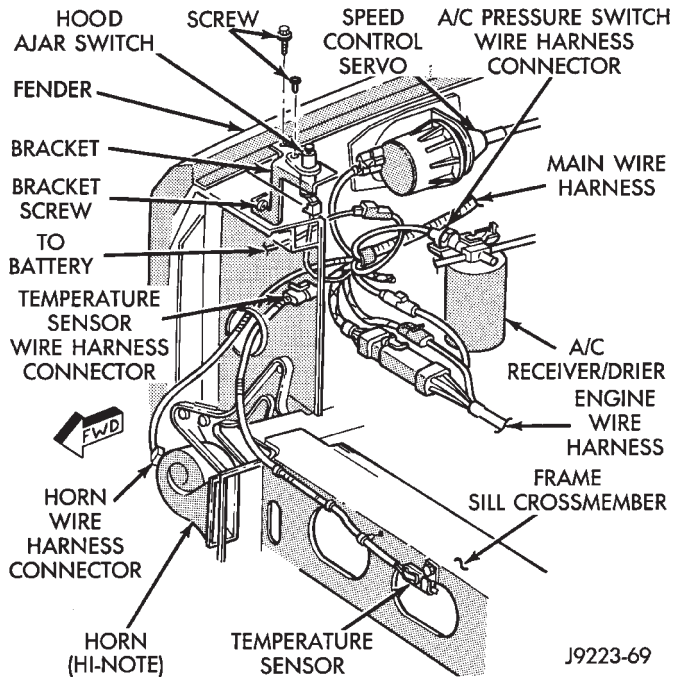

Fig. 40 Hood Ajar Switch, Speed Servo & A/C Receiver/Drier

• Remove the Power Distribution Center (PDC), the coolant recovery bottle and speed servo from fender the inner panel (Fig. 42, 43 and 44).

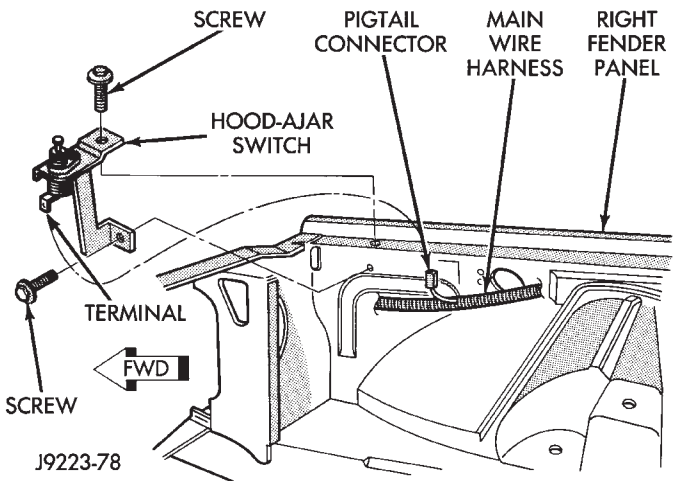

Fig. 41 Hood Ajar Switch Removal/Installation

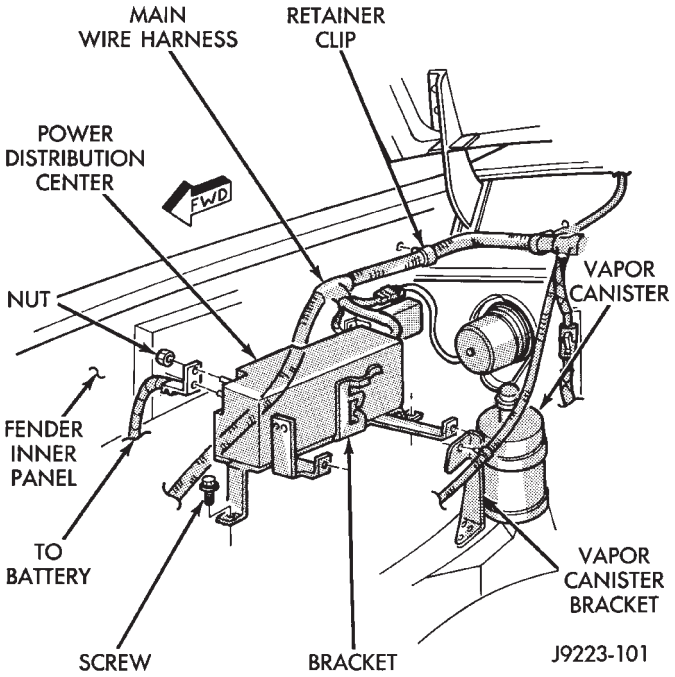

Fig. 42 Power Distribution Center and Vapor Canister

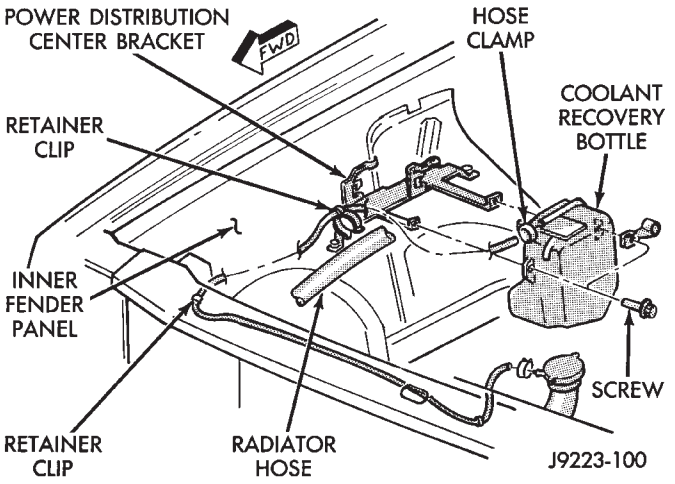

Fig. 43 Coolant Recovery Bottle

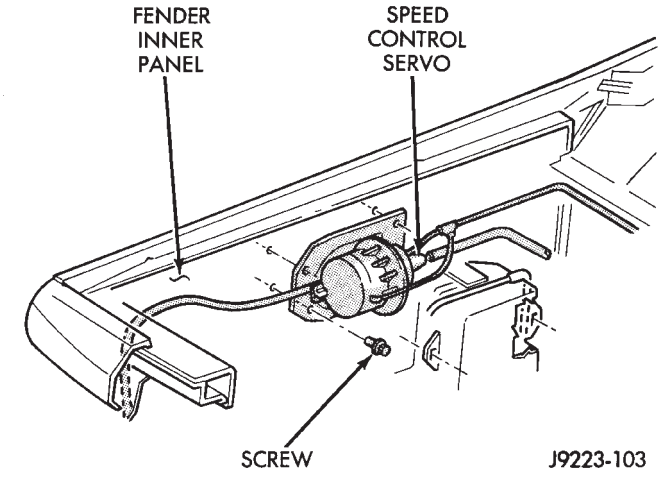

Fig. 44 Speed Servo

• Remove the vapor canister from the fender inner panel (Fig. 42 and 45).

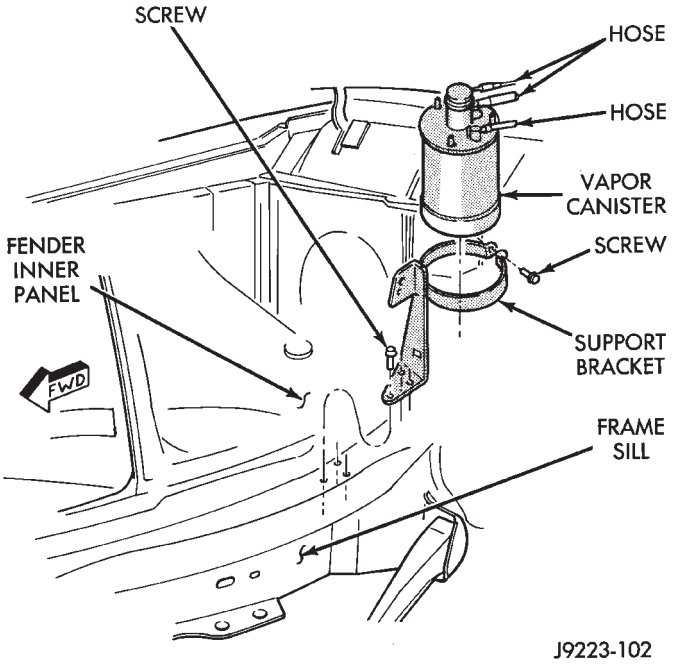

Fig. 45 Vapor Canister

• Remove the A/C Receiver/Drier from the fender inner panel (Fig. 40).
• If equipped, remove the Daytime Running Light (DRL) module from the fender inner panel (Fig. 46).
• Support the hood and remove the hood support rod from the fender inner panel.

(3) Remove the hood bumper from the fender inner panel (Fig. 47).

(4) Raise and support the vehicle.

(5) Remove the front wheel.

(6) Remove the fender liner, fender flare and retainers (Fig. 48):

• Remove the screws that attach the lower part of flare to the fender outer panel.

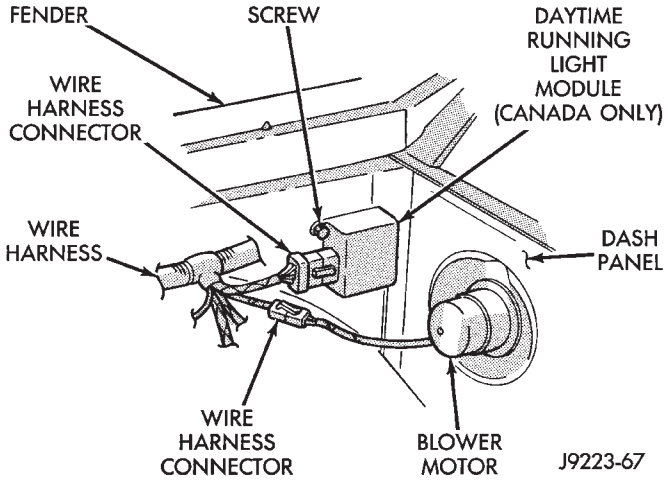

Fig. 46 Daytime Running Light (DRL) Module

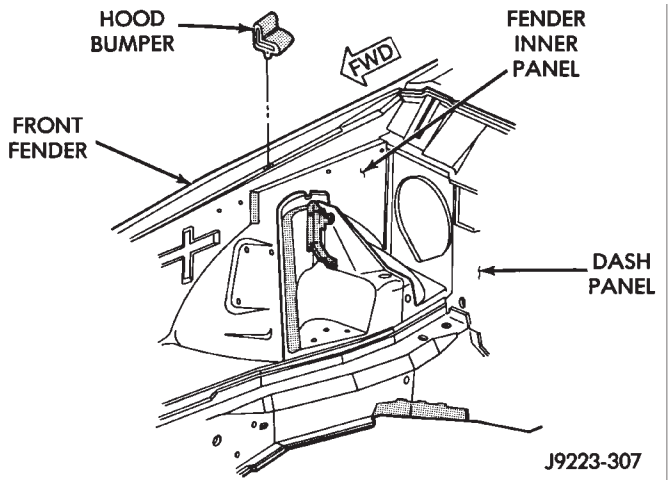

Fig. 47 Hood Bumper

• Remove the rivets that attach the flare to the air deflector.
• Remove the retainers that attach the fender liner to the fender inner panel.
• Remove the nuts that attach the fender liner to the fender outer panel and flare retainers.
• Remove the fender liner from between the fender panels.
• Remove the push-nuts that attach the retainers to the fender outer panel.
• Remove the retainers and flare from the fender outer panel.

(7) Remove the grille opening panel (GOP).

(8) Remove the air deflector.

(9) Remove the rocker panel molding from the fender.

(10) Remove all the fender braces (Fig. 49).

(11) Remove the fender lower screws (Fig. 49).

(12) Remove the fender top, front and the rear screws. Remove the fender from the inner fender panel (Fig. 49).

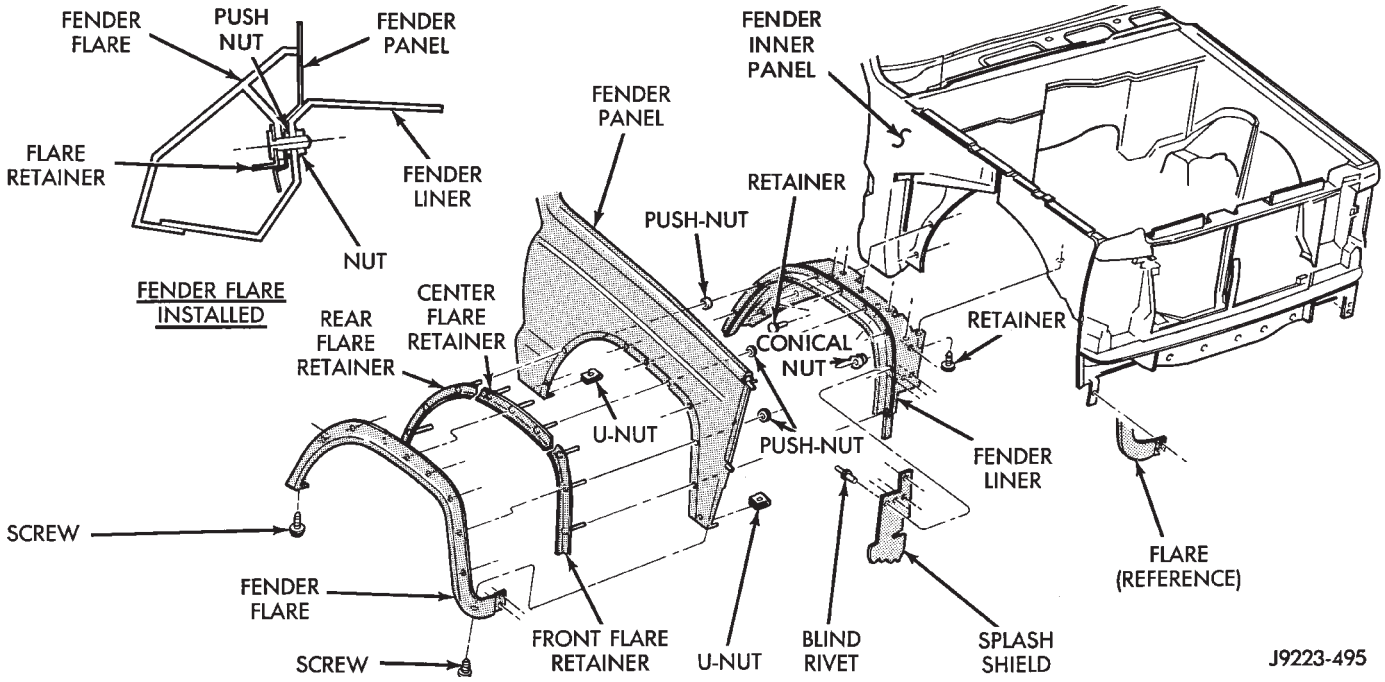

Fig. 48 Fender Flare & Liner Removal/Installation

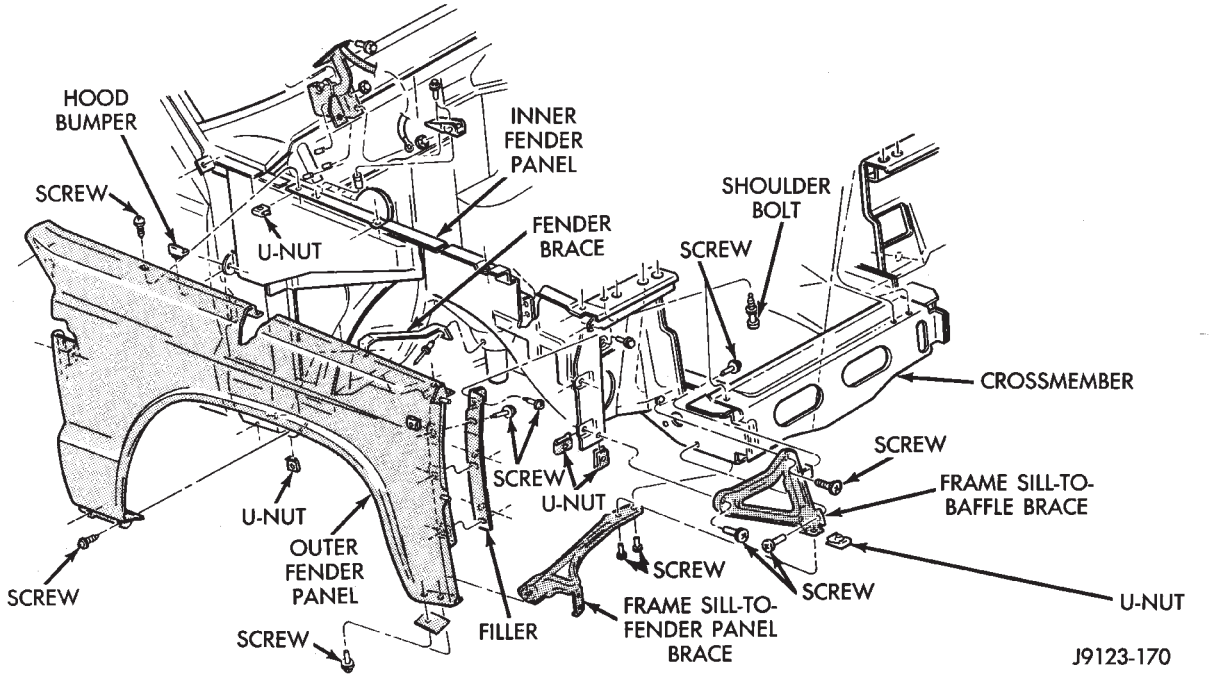

Fig. 49 Fender Removal/Installation

INSTALLATION

(1) Position the fender on the inner fender panel.

(2) Install all of the fender screws finger-tight.

(3) Install the fender braces.

(4) Align the fender with the body panels and tighten the fender screws to 8.5 N·m (76 in-lbs) torque.

(5) Install the grille opening panel (GOP).

(6) Install the air deflector.

(7) Install the fender flare and retainers (Fig. 50). Then install the fender liner.

- Position the retainers and the flare on the fender.
- Install the push-nuts to attach the retainers to the fender.
- Position the fender liner between the fender and fender inner panel (Fig. 51).
- Install the nuts to attach the fender liner to the fender and flare retainers (Fig. 48).

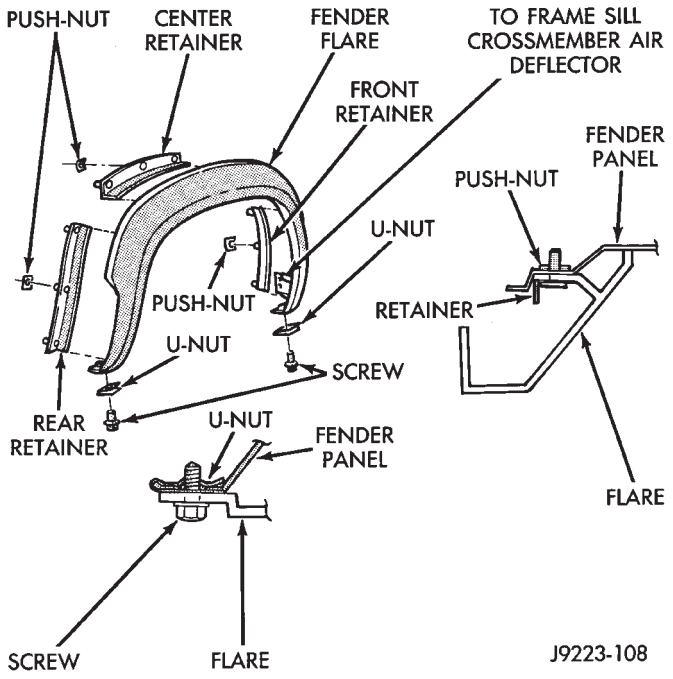

Fig. 50 Fender Flare & Retainers

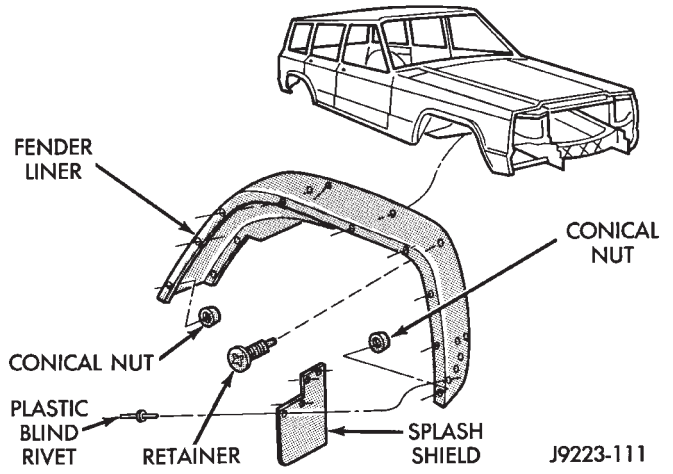

Fig. 51 Fender Liner and Retainers

• Install the retainers to attach the fender liner to the fender inner panel.
• Install the rivets to attach the flare to the air deflector (Figs. 48 and 50). and
• Install the screws to attach the flare to the fender. Tighten the screws to 1 N·m (13 in-lbs) torque.

(8) Connect the front lamp wire harness connectors to the engine wire harness connectors (Fig. 52).

(9) Install the front lamps.

(10) Install the front bumper.

(11) Install the wheel, remove the support and lower the vehicle.

(12) Right fender only: install the hood support rod on the fender inner panel.

(13) Install the hood bumper on the fender inner panel.

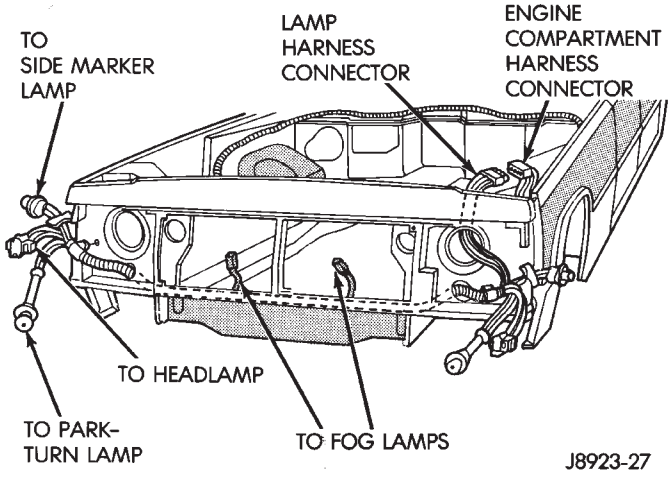

Fig. 52 Front Lamp Wire Harness Connectors

(14) Right fender only: install the Daytime Running Light (DRL) module on fender inner panel.

(15) Right fender only: install the A/C Receiver/ Drier on the fender inner panel.

(16) Right fender only: install the vapor canister on the fender inner panel. Tighten the vapor canister screws to 5 N·m (45 in-lbs) torque.

(17) Right fender only: install the PDC, coolant recovery bottle and speed servo on the fender inner panel.

(18) Right fender only: install the hood ajar switch, if equipped. Tighten the screws to 2 N·m (15 in-lbs) torque.

(19) Right fender only: install the windshield washer fluid reservoir on the inner panel.

(20) Right fender only: install the battery tray and battery on the inner panel.

(21) Right fender only: if equipped, install the radio antenna. Tighten the nut/escutcheon to 4.5 N·m (40 in-lbs) torque. Tighten the power antenna bracket screws to 2 N·m (20 in-lbs) torque.

REAR WHEELHOUSE FLARES AND LINERS—XJ

REMOVAL

(1) Remove the flare and liner lower screws (Fig. 53 and 54).

(2) Remove the nuts that attach the liner to the wheelhouse.

(3) Remove the liner from the wheelhouse.

(4) Remove the push-nuts that attach the flare retainers to the wheelhouse (Fig. 55).

(5) Remove the flare and retainers from the wheelhouse.

INSTALLATION

(1) Position the flare and retainers at the wheelhouse.

(2) Install the push-nuts to attach the flare retainers to the wheelhouse.

(3) Position the liner in the wheelhouse.

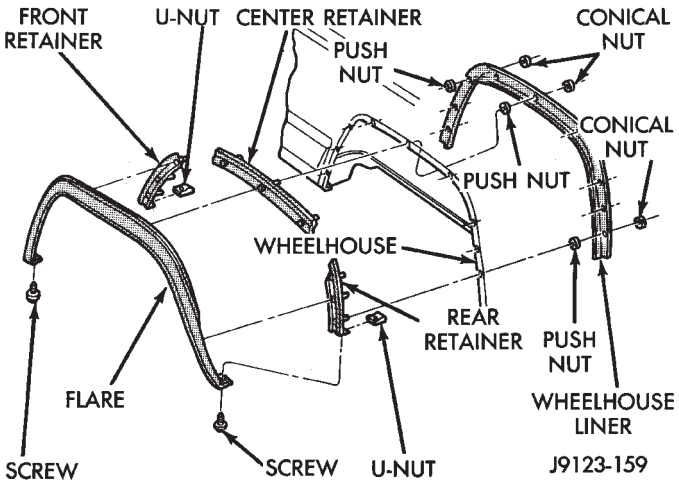

Fig. 53 Rear Wheelhouse Flare, Retainers and Liner

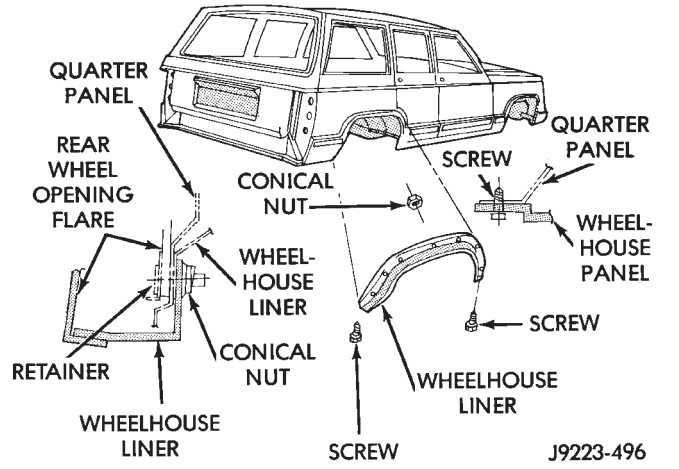

Fig. 54 Rear Wheelhouse Liner

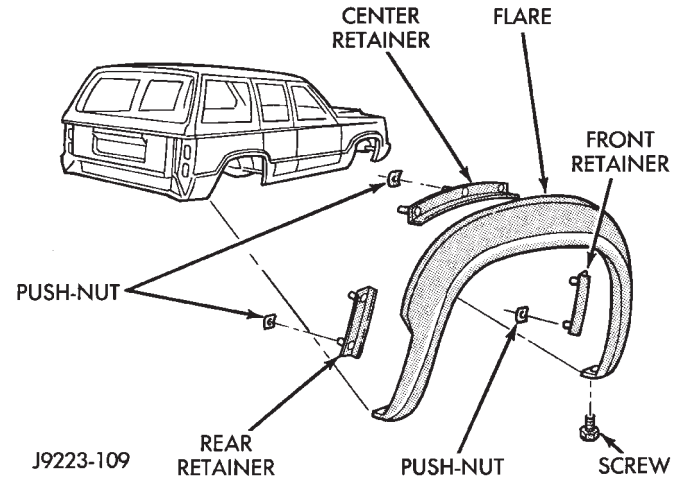

Fig. 55 Rear Wheel Opening Flare

(4) Install the nuts to attach the liner to the wheelhouse and flare retainers.

(5) Install the flare and liner lower screws. Tighten the screws to 1 N·m (13 in-lbs) torque.

BODY SIDE MOLDING/CLADDING—XJ

REMOVAL

(1) Loosen the vinyl body side molding (Fig. 56 and 57) with a heat gun.

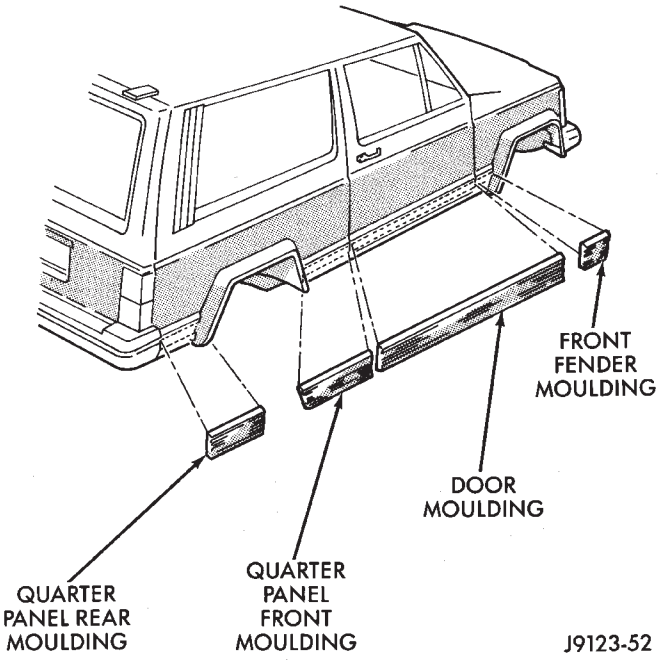

Fig. 56 Body Side Molding—2-Door XJ Vehicles

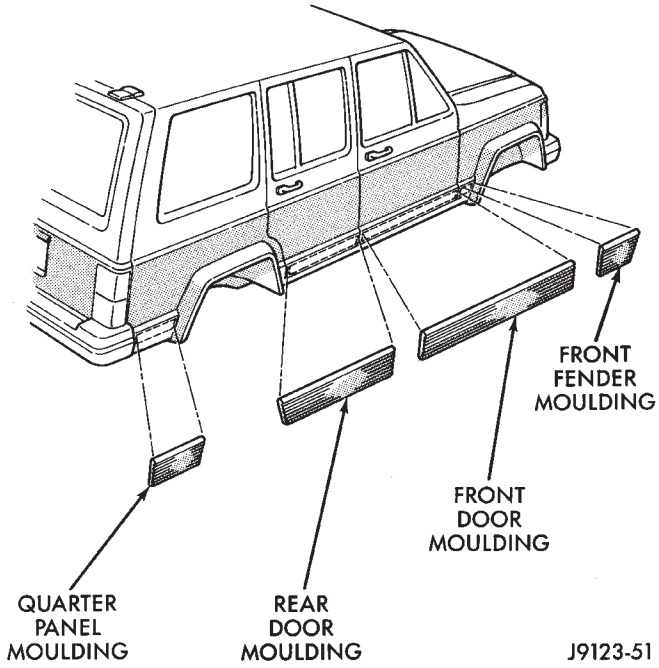

Fig. 57 Body Side Molding/Cladding—4-Door XJ Vehicles

(2) Lift edge of molding with a putty knife and peel molding from body panel. Apply heat to any location where the molding remains adhered to a panel.

(3) Remove the adhesive from the body panel with 3M All Purpose Cleaner, or an equivalent cleaner.

(4) If the original molding will be installed, also remove all adhesive from it.

INSTALLATION

(1) Install 3M 06379 double-sided tape on the molding.

(2) For vertical alignment, use masking tape or a string as reference.

(3) Remove the backing from the tape, align the molding and position it on the body panel.

(4) Press the molding onto the body panel with a roller or hand pressure.

BODY STRIPES/DECALS—XJ

SERVICE INFORMATION

XJ body stripes and decals are weather resistant tape with a adhesive backing.

REPAIR

Small nicks, scratches and other surface marks in a body stripe/decal can be touched-up with paint.

To eliminate blisters and air bubbles in a body stripe/decal, pierce them with a needle or pin.

A heat gun can also be used to remove small wrinkles in a stripe/decal.

REQUIREMENTS

Body stripe/decal replacement requires that the metal repair and paint refinish be completed first.

The work area temperature should be between 18°C (65°F) and 32°C (90°F).**A tape stripe/decal should not be replaced if the work area temperature is less than 18°C (65°F).**

The following equipment and material are necessary for removal and installation:

- Commercial tape stripe/decal removal solution.
- Commercial adhesive removal solution.
- Liquid dish detergent (for the wetting solution).
- Mixture of wetting solution.
- Commercial wax and silicone removal solution.
- Isopropyl (rubbing) alcohol.
- Small squeegee (plastic or hard rubber).
- Water bucket and sponge.
- Clean wiping rags or paper towels.
- Heat gun (or infra-red heat bulb).
- Wax pencil.
- Sharp knife, single edge razor blade or X-acto knife.
- Pair of scissors.
- Needle or pin.

The use of a wetting solution aids the installation of a tape stripe/decal on a painted panel. Prepare the wetting solution by mixing two or three teaspoons of dish detergent with 1 gallon of water.**Do not use soap.**

Too much detergent will reduce the effectiveness of the mixture.

REMOVAL

(1) Clean the repaired surface, adjacent panels and door the openings as necessary.

(2) Start at one end of the tape stripe/decal and apply heat with a heat gun. Slowly peel the stripe/decal from the panel by pulling it back. **Do not pull the tape stripe/decal outward from panel.**

WARNING: USE TAPE STRIPE/DECAL REMOVAL SOLUTION IN A WELL-VENTILATED AREA ONLY.

(3) A tape stripe/decal removal solution can be used for removal at areas where a heat gun is ineffective:

- Mask-off the body panel area surrounding the tape stripe/decal (Fig. 1).

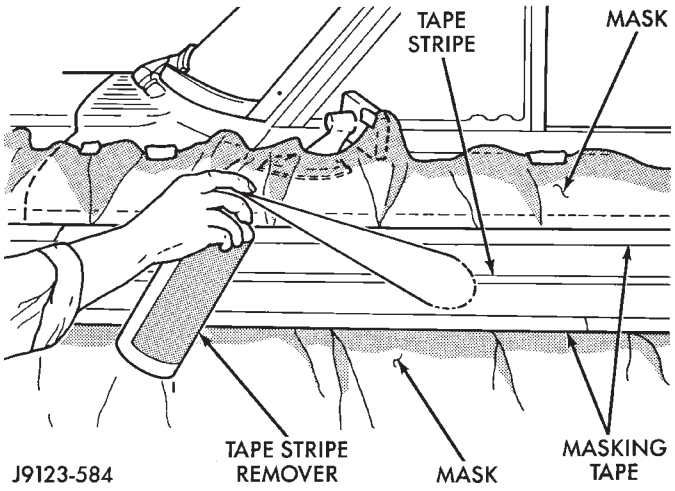

Fig. 1 Stripe/Decal Removal Solution Application

- Move solution spray across the complete length of stripe/decal with a steady motion.
- Ensure that the complete stripe/decal is covered with solution.
- Allow stripe/decal removal solution to remain on the stripe/decal for 20 minutes.
- After 20 minutes, peel the stripe/decal away from flange area (Fig. 2).

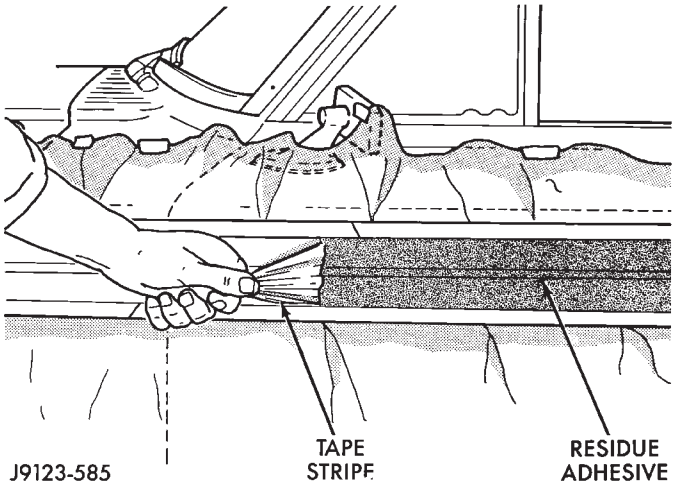

Fig. 2 Body Stripe/Decal Removal

• If there is difficulty with peeling the stripe/decal away from the body panel, use a squeegee (Fig. 3).

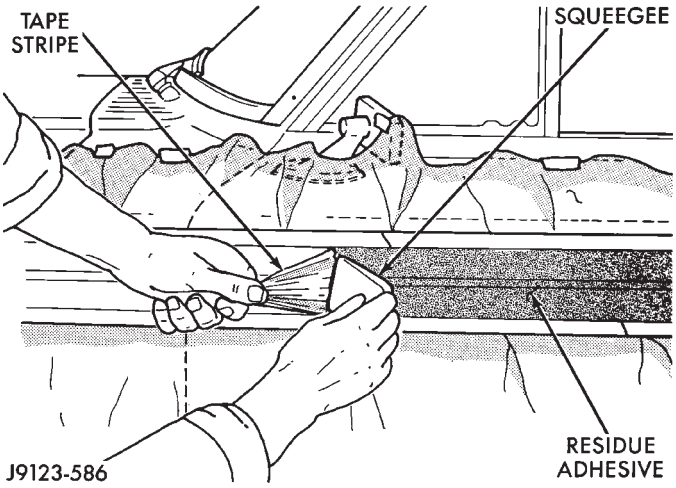

Fig. 3 Body Stripe/Decal Removal With A Squeegee

• With the stripe/decal removed, scrape all the stripe/decal solution from the panel surface before proceeding.

WARNING: USE THE ADHESIVE REMOVAL SOLUTION IN A WELL-VENTILATED AREA ONLY.

(4) After the stripe/decal is removed, remove any adhesive remaining with a removal solution.

Allow the adhesive removal solution to remain on the panel for 3 to 5 minutes only.

(5) After 3 to 5 minutes, use a squeegee to remove the adhesive (Fig. 4).

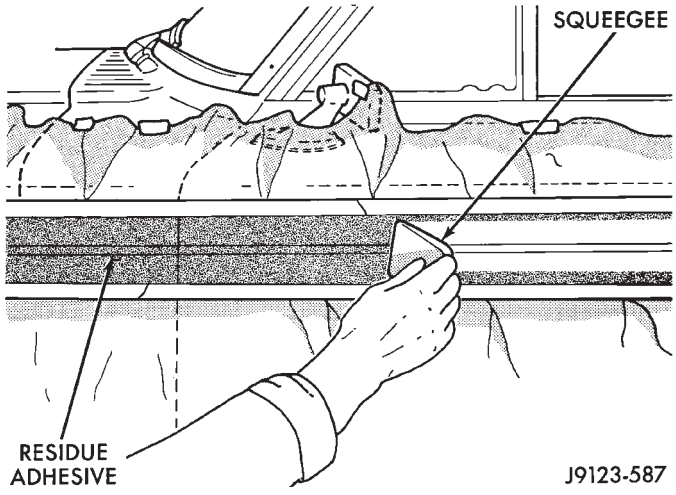

Fig. 4 Adhesive Removal With A Squeegee

(6) Remove the masking tape and mask from the panel.

(7) Wipe the panel with a cloth saturated with an adhesive cleaning solution.

BODY PANEL SURFACE PREPARATION

(1) The area that will be covered by the tape stripe/decal must be cleaned with cleaning solution.

(2) Freshly painted surfaces must be thoroughly dry.

(3) Clean the painted surface with a commercial wax and silicone removal solution. Wipe the surface with a clean cloth and allow it to dry.

REPLACEMENT ON ONE PANEL

For tape stripes/decals, use a clean sponge and apply the wetting solution:

• To the adhesive side of the tape stripe/decal.
• To the painted panel surface.

The wetting solution will permit ease of tape stripe/decal movement when positioning it.

(1) Align a straight edge with the existing tape stripe/decal ends (Fig. 5).

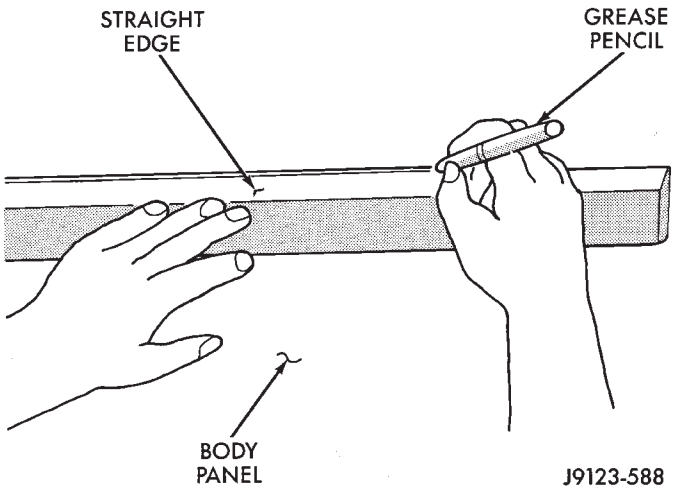

Fig. 5 Stripe/Decal Alignment Reference Mark

If applicable, the body panel character line can be used as the tape stripe/decal alignment reference.

(2) Position the tape stripe/decal and carrier on the body panel and the mark length with a wax pencil.

(3) Cut the stripe/decal and carrier at the required length with scissors.

(4) Position the stripe/decal and carrier on the body panel and hold it in-place with masking tape (Fig. 6).

(5) Lift the bottom edge of tape stripe/decal and carrier. Use the tape sections as hinges, and reverse the position of stripe/decal and carrier (Fig. 7).

CAUTION: Always remove the carrier from the tape stripe/decal, never remove the tape stripe/decal from carrier

(6) Bend a corner of carrier outward and then, with a flick of the finger, separate the corner of carrier from the decal.

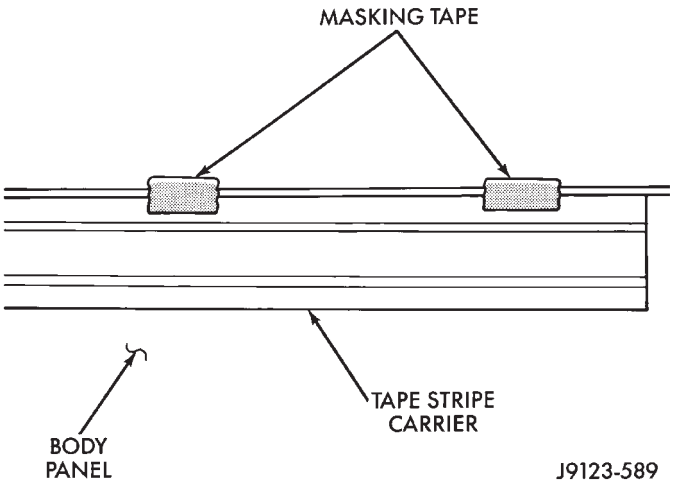

Fig. 6 Tape Stripe/Decal And Carrier Retained On Body Panel

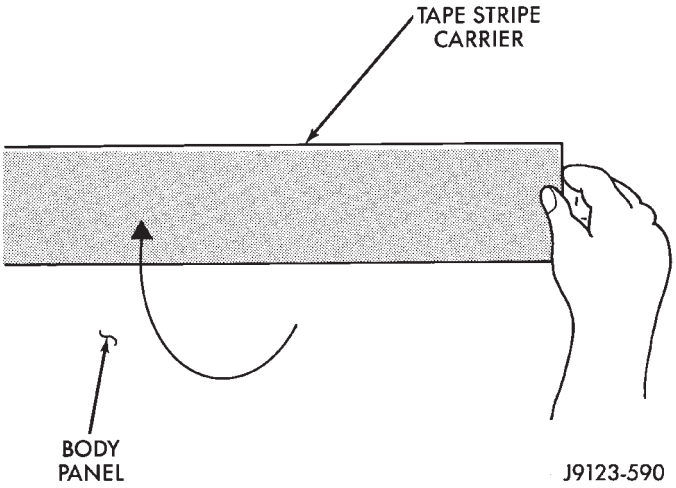

Fig. 7 Tape Stripe/Decal And Carrier Reversed On Body Panel

(7) Separate approximately 15 cm (6 in) of the carrier from one end of the tape stripe/decal.

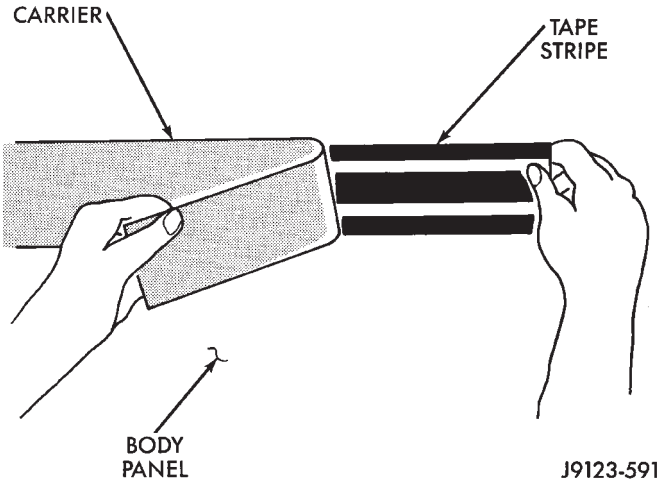

Fig. 8 Tape Stripe/Decal and Carrier Separated

(8) Return the tape stripe/decal back to its original position. If a solution is being used, position adhesive side of the tape stripe/decal on panel. Apply the solution to the outside of the tape stripe/decal.

(9) Hold the tape stripe/decal against the panel surface while separating the carrier from the stripe/decal (Fig. 9).

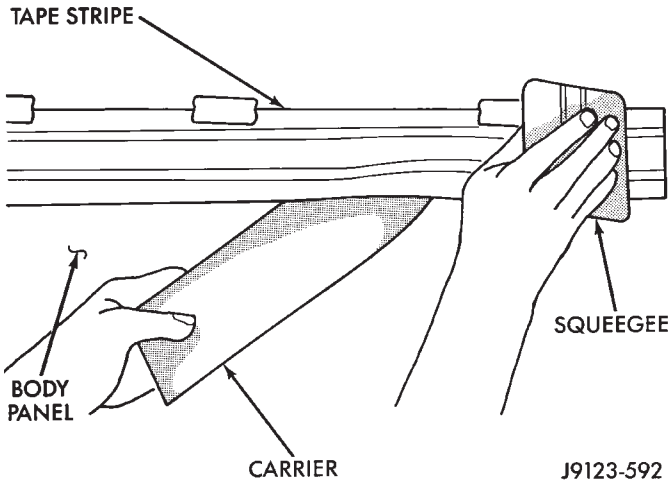

Fig. 9 Tape Stripe/Decal Installation

(10) Where applicable, extend the tape stripe/decal 12 mm (1/2 in) beyond door edge. Wrap it around the edge and press it to the door flange (Fig. 10).

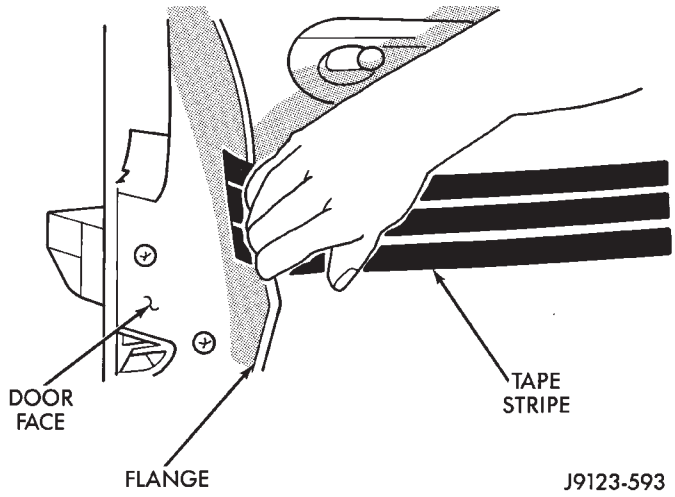

Fig. 10 Tape Stripe/Decal Installation On Door Flange

(11) If applicable, remove the cover from face of tape stripe/decal.

(12) Inspect the tape stripe/decal with reflected light to find any damage. Remove all the air and/or moisture bubbles.

COMPLETE REPLACEMENT

The following procedure will simplify the installation of a complete or very large section (Fig. 11, 12, 13, 14 and 15).

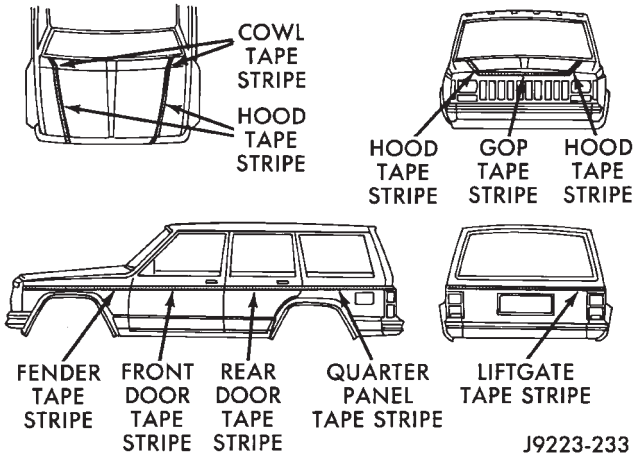

Fig. 11 Tape Stripes—XJ

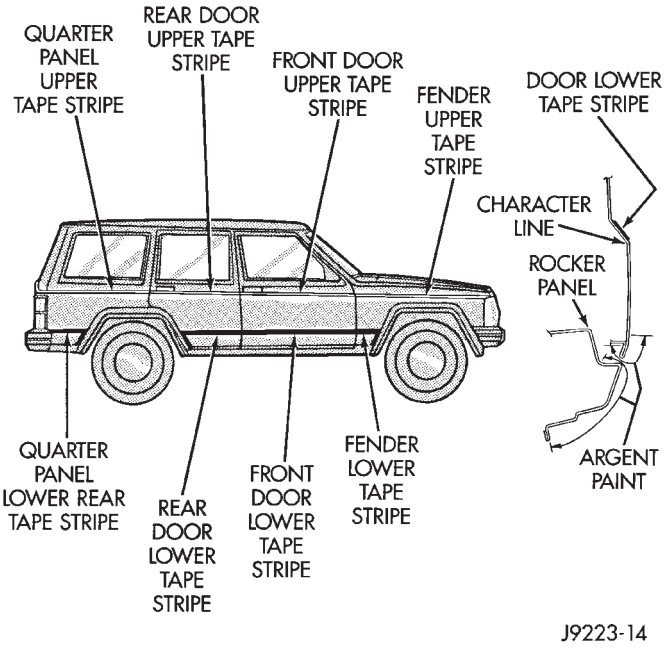

Fig. 12 Upper and Lower Body Side Tape Stripes—XJ Vehicles

(1) Place the tape stripe/decal on a clean, flat surface with the carrier side facing upward.

CAUTION: Always remove the carrier from tape stripe/decal, never remove the tape stripe/decal from the carrier.

(2) Bend a corner of the carrier inward and then, with a flick of the finger, separate the corner of carrier from the tape stripe/decal.

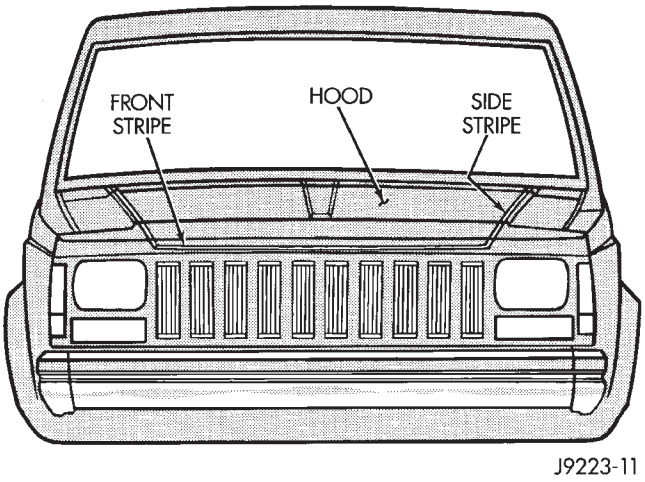

Fig. 13 Hood Tape Stripes—XJ Vehicles

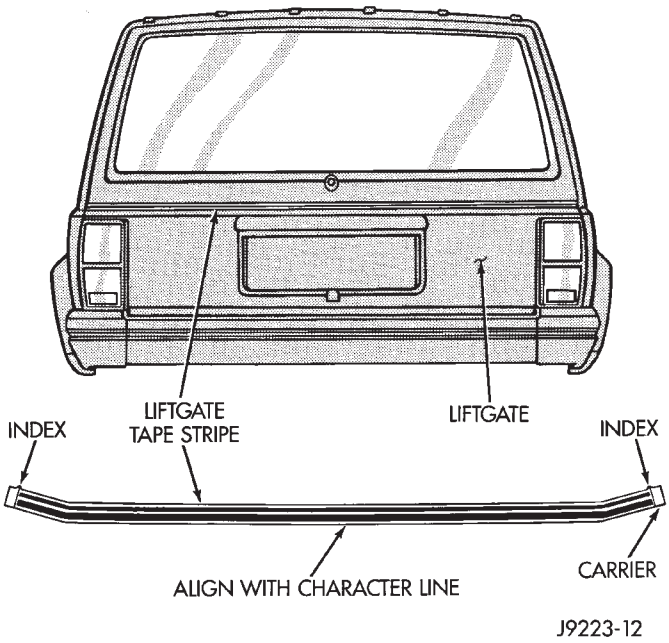

Fig. 14 Tailgate Tape Stripes—XJ Vehicles

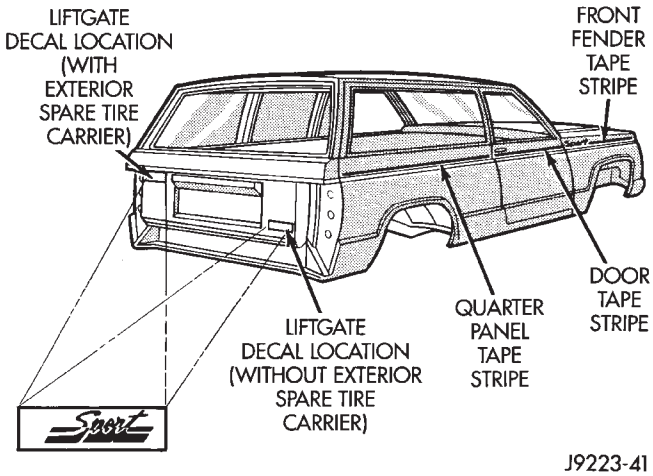

Fig. 15 Tape Stripes and Decal—XJ Sport

(3) Retain the tape stripe/decal firmly against flat surface and separate the carrier from tape stripe/decal.

(4) Use a sponge and apply solution to the tape stripe/decal adhesive and to panel surface.

(5) Position the adhesive side of tape stripe/decal on the panel with the bottom aligned with the character line.

- Align the end of the replacement tape stripe/decal with the end of existing tape stripe/decal.
- Correctly align the index darts and index notches.

(6) If a complete replacement tape stripe/decal is not being installed:

- Position the replacement tape stripe/decal section at the center of the repair area.
- Align it with the existing tape stripe/decal.
- Allow at least 12 mm (1/2 in) of the tape stripe/decal section to overlap the tape stripe/decal edges.

(7) Apply the wetting solution to the outer side of the tape stripe/decal.

CAUTION: Avoid unnecessary pulling and stretching at the ends.

(8) Slide a squeegee from the center to the ends of the tape stripe/decal. Use firm strokes to remove all of the air bubbles.

(9) If a wrinkle is trapped in the tape stripe/decal stop immediately. Lift the wrinkled area and re-align it with the character line to remove the wrinkle.**Do not lift the tape stripe/decal if only a few air bubbles exist.**

(10) Where applicable, allow 12 mm (1/2 in) extra tape stripe/decal to extend beyond edges.

(11) Fold the excess tape onto the inside flange and adhere it with finger pressure.

(12) Inspect the tape stripe/decal installation with the reflected light to find any damage.

(13) Remove all the air and moisture bubbles from the tape stripe/decal with a needle or pin.

(14) Install any removed components and clean the vehicle as necessary.

QUARTER WINDOW APPLIQUE—XJ

REMOVAL/INSTALLATION

(1) Remove nuts from inside vehicle (Fig. 16).

(2) Carefully pry the applique the from panel.

(3) Position the replacement applique the on panel and install the nuts.

DRIP RAIL MOLDING—XJ

REMOVAL

(1) Pry the clips from the roof flange.

(2) Remove the clips and molding from the roof flange.

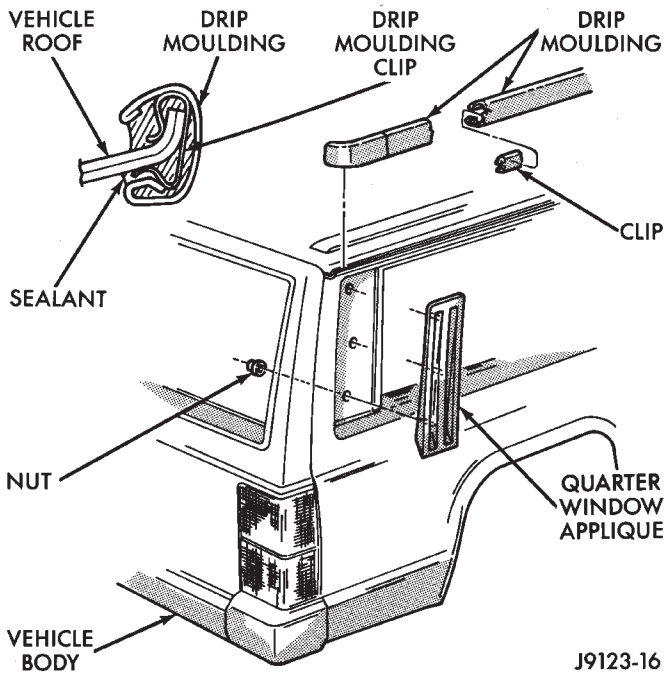

Fig. 16 Quarter Window Applique and Drip Molding

(3) Remove the remaining sealant and clean the roof flange.

INSTALLATION

(1) Position the drip rail molding with clips at the roof flange and force the clips onto the roof flange.

(2) Apply sealant to the inner side of the molding to seal the roof flange.

AIR EXHAUST GRILLE—XJ

REMOVAL

(1) Remove the screw that attaches the grille to door the opening panel (Fig. 17).

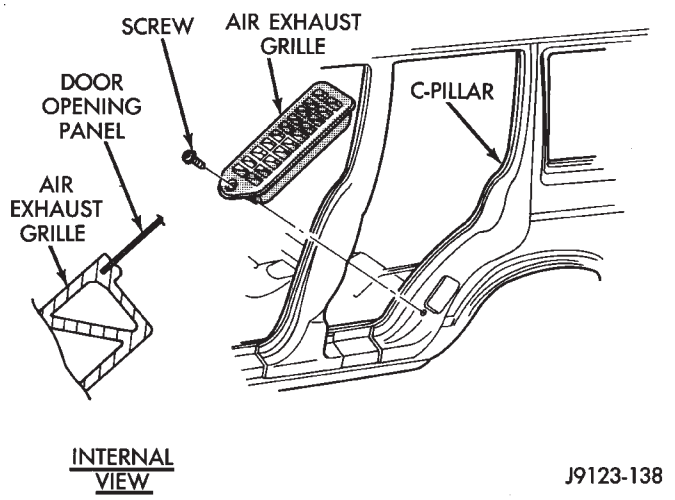

Fig. 17 Door Opening Air Exhaust Grille

(2) Pry the bottom edge of the grille from the door opening panel.

(3) Pull downward and remove the grille from exhaust port in the door opening panel.

INSTALLATION

(1) Position the slot located in the upper end of replacement grille at the exhaust port and insert edge in the slot.

(2) Push inward and seat the grille in the exhaust port.

(3) Install the screw to attach the grille to the door opening panel.

EXTERIOR NAMEPLATES—XJ

SERVICE INFORMATION

All of nameplates, with the exception of the JEEP nameplate located on the grille are attached with adhesive (Fig. 18).

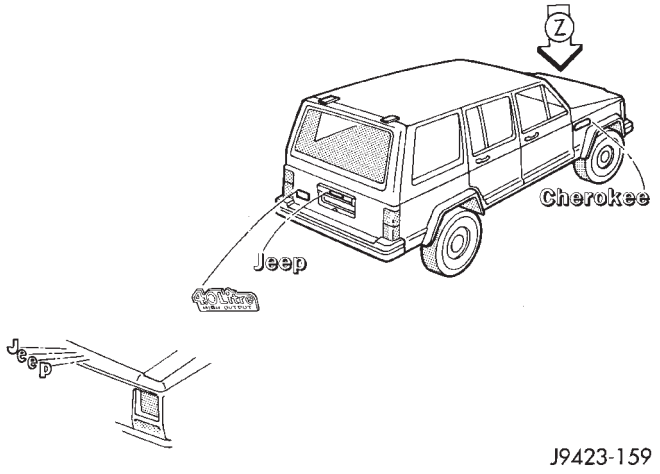

Fig. 18 XJ Exterior Nameplates

GRILLE OPENING PANEL NAMEPLATE

REMOVAL

(1) Remove the grille opening panel (GOP) support bracket.

(2) As applicable, remove the nut(s) from the letter(s) that must be replaced.

(3) Remove the nameplate letter(s) from GOP.

INSTALLATION

(1) Clean the panel surface.

(2) Position the replacement letter(s) on the GOP.

(3) Install the nut(s) and tighten.

ADHESIVE-BACKED NAMEPLATES

REMOVAL/INSTALLATION

(1) Pry the nameplate from vehicle panel.

(2) Clean the panel surface.

(3) Position the replacement nameplate on the panel push inward to seat it.

FUEL FILLER NOZZLE/TUBE—XJ

REMOVAL

(1) Remove the fuel filler door from the quarter panel (Fig. 19).

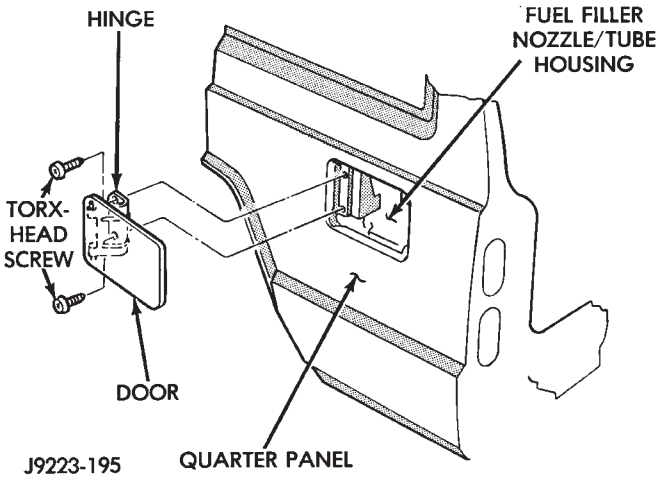

Fig. 19 Fuel Filler Door—Typical

(2) For XJ vehicles, remove the fuel filler hose splash shield from the quarter inner panel and frame rail (Fig. 20).

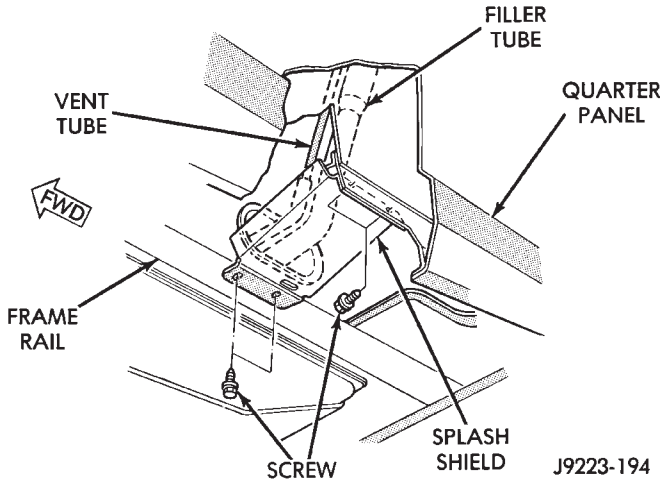

Fig. 20 Fuel Filler Hose Splash Shield—XJ Vehicles

(3) Remove the cap from the nozzle (Fig. 21).

(3) Loosen the clamps and separate the hoses from the tubes.

(4) Remove the screws that attach the nozzle to the housing.

(5) Remove the nozzle/tube from the fuel filler housing (Fig. 22).

INSTALLATION

(1) Insert the fuel filler nozzle/tube into the housing.

(2) Install the screws to attach the nozzle/tube to the housing. Tighten screws to 2 N·m (20 in-lbs) torque.

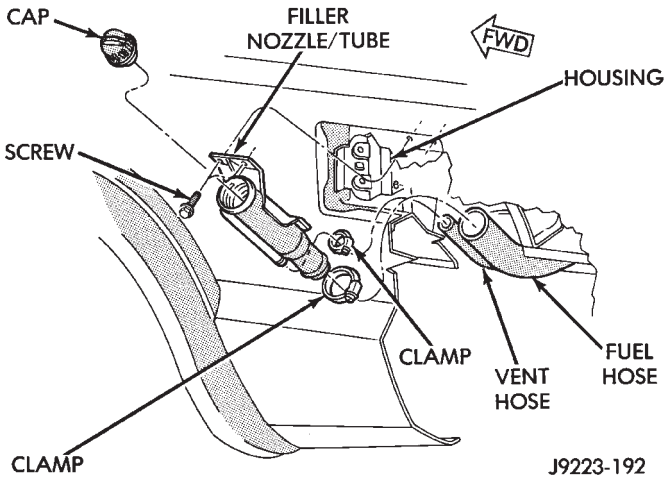

Fig. 21 Fuel Filler Nozzle/Tube—XJ Vehicles

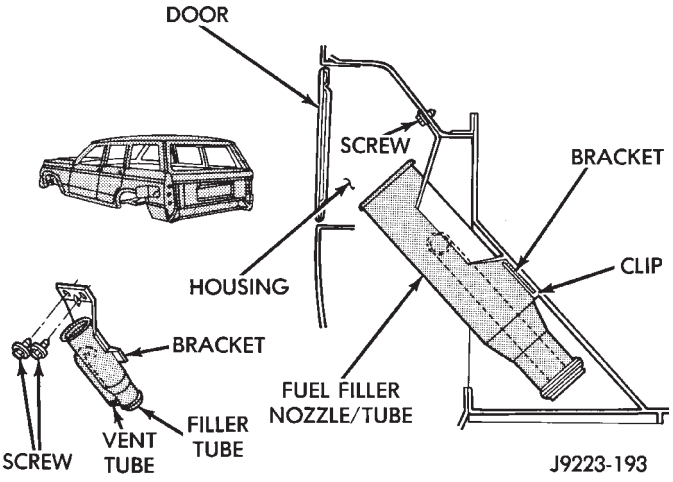

Fig. 22 Fuel Filler Nozzle/Tube Removal/ Installation—XJ Vehicles

(3) Attach the hoses to the tubes with clamps. Tighten the clamp screws to 4 N·m (35 in-lbs) torque.

(4) Install the cap on nozzle.

(5) Install the fuel filler hose splash shield on the quarter inner panel and frame rail.

(6) Install the fuel filler door on the quarter panel.

FUEL FILLER DOOR BUMPERS—XJ

REPLACEMENT

(1) Grasp the bumper (Fig. 23) with pliers and pull outward to remove it from the hole.

- It may be necessary to remove the door (Fig. 24) to replace the door-stop bumper.

(2) Insert bumpers in the holes and force them inward until they are seated in the holes.

EXTERNAL MIRRORS—XJ

SERVICE INFORMATION

Service procedures for all external rear view mirrors are below.

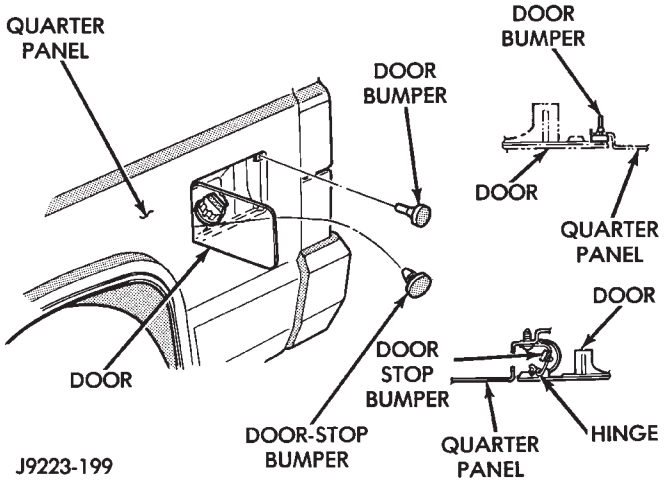

Fig. 23 Fuel Filler Door Bumpers

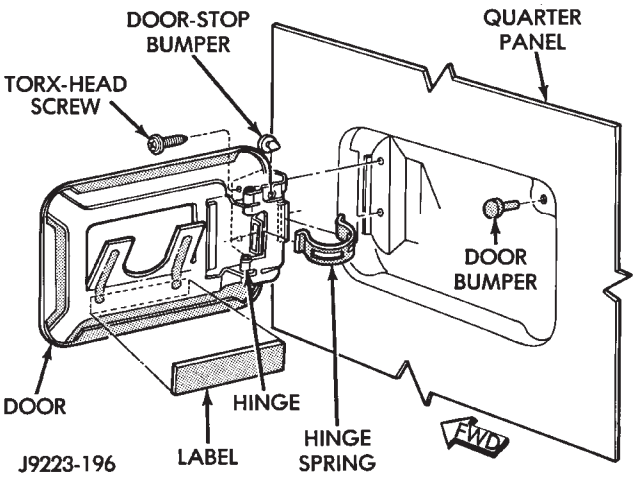

Fig. 24 Fuel Filler Door-Stop Bumper

REMOTE AND POWER/MANUAL MIRRORS

REMOVAL

(1) Remove the door trim panel.

(2) Remove the mirror inside trim cover screw (Fig. 1).

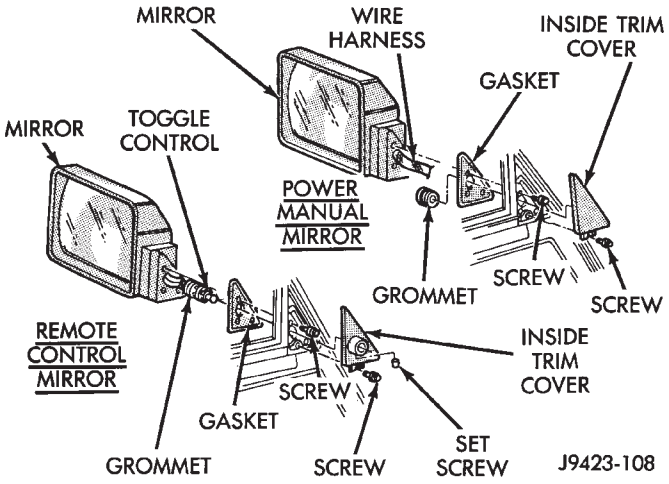

Fig. 1 Remote Mirrors—Power/Manual

(3) For power/manual mirrors, remove the inside trim cover.

(4) For remote control mirrors, loosen the toggle control setscrew (Fig. 2).

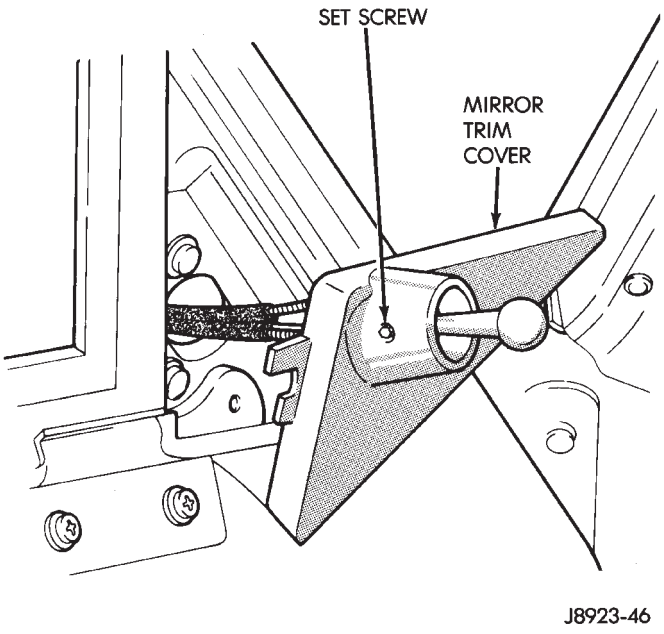

Fig. 2 Remote Mirror Toggle Control Set Screw

(5) For remote control mirrors, remove the inside trim cover (Fig. 3).

(6) Remove the mirror screws.

(7) Remove the mirror from the door. Refer to Group 8, Electrical.

INSTALLATION

(1) Position the mirror adjacent to the vent window.

(2) Install the mirror screws. Tighten the screws securely.

(3) For remote mirrors, position the inside trim cover over the toggle control and tighten the setscrew.

(4) Install the inside trim cover.

(5) Install the inside trim cover screw.

(6) Install the door trim panel.

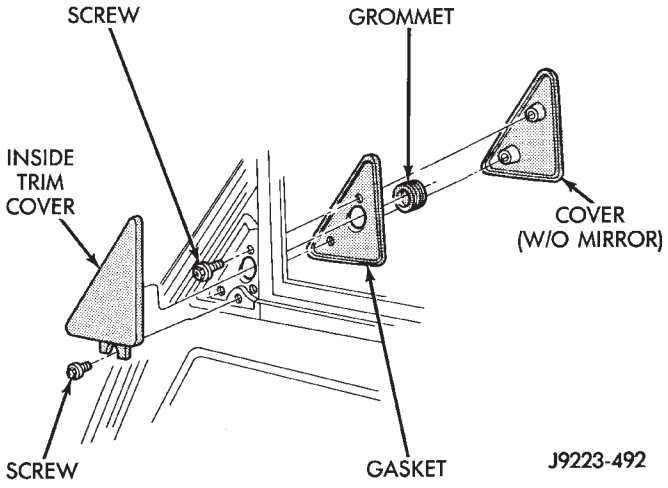

Fig. 3 Trim Covers Without External Mirror

LUGGAGE RACK—XJ

REMOVAL

(1) Remove the slide rail screws (Fig. 4).

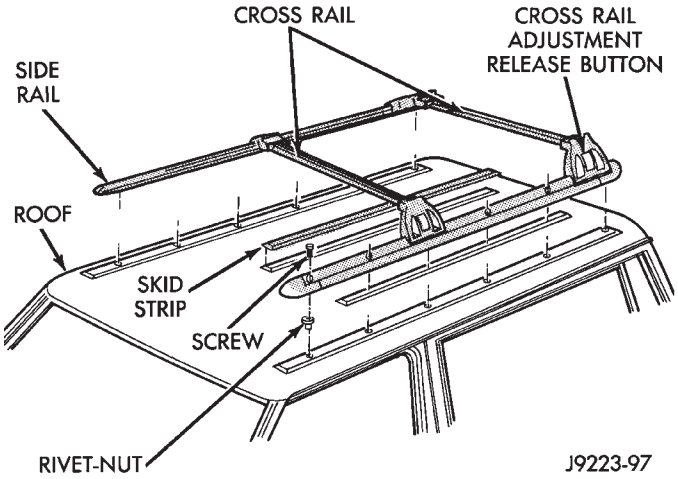

Fig. 4 Luggage Rack

(2) Remove the luggage rack from the roof.

The skid strips are attached to the roof panel with adhesive.

(3) Loosen each skid strip with a heat gun.

(4) Lift one edge of each skid strip with a putty knife and peel it from the roof panel.

(5) Remove the original adhesive from the roof with an adhesive removal solution.

(6) If the original skid strips are installed, remove all the original adhesive from them.

INSTALLATION

(1) Install 3M 06379 double-sided tape, or an equivalent on skid strips.

(2) Remove the backing from the double-sided tape, align each skid strip on the roof, and position it on the roof panel (Fig. 5).

(3) Verify that each skid strip is properly aligned.

(4) Press each skid strip onto the roof panel with a roller (or use hand pressure).

To prevent water leaks, apply 3M Drip-Chek Sealant, or equivalent.

(5) Position the luggage rack on the roof with the screw holes aligned.

(6) Install and tighten the slide rail screws to 3 N·m (28 in-lbs) torque.

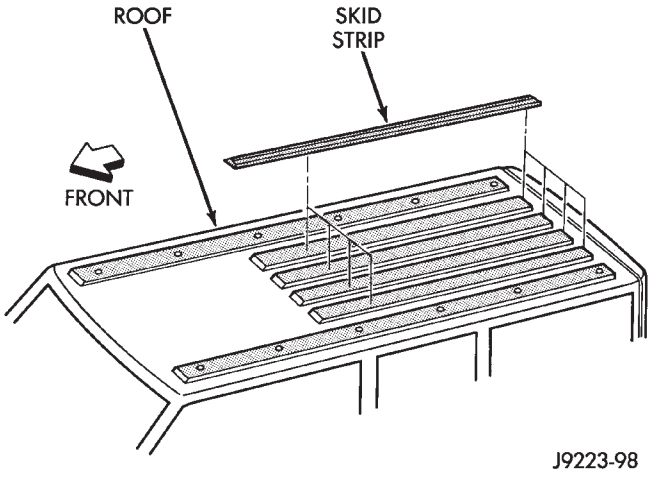

Fig. 5 Skid Strip Installation

DOORS

INDEX

	page
Door Alignment Adjustment—Major	41
Door Alignment Adjustment—Minor	37
Door Edge Guard/Edge Protector Strip—XJ	54
Door External Handle—XJ	48
Door Hinge/Hinge Pin Replacement—XJ	52
Door Inside Latch Release and Lock Rods—XJ	50
Door Key Lock Cylinder—XJ	47
Door Latch Adjustment—XJ	48
Door Latch—XJ	49
Door Removal/Installation—XJ	35
Door Restraint Replacement—XJ	41
Door Trim Panel—XJ	31
Door Window Exterior Moldings—XJ	54
Door Window Glass and Door Opening Weatherstrip Seals—XJ	55
Front Door Spacer Blocks—Two-Door Vehicles	53
Front Door Window Glass Regulator—XJ	42
Front Door Window Glass—XJ	43
Liftgate Adjustment—XJ	63
Liftgate Hinge—XJ	60
Liftgate Latch/Key Lock Cylinder/Striker—XJ	61
Liftgate License Plate Lamp Housing—XJ	65
Liftgate License Plate Screw Anchor and Bumper—XJ	65
Liftgate Opening Weatherstrip Seal—XJ	64
Liftgate Support Rod Ball Stud Replacement—XJ	63
Liftgate Support Rod Cylinder Disposal—XJ	63
Liftgate Support Rod Cylinder—XJ	62
Liftgate Trim Panel—XJ	59
Liftgate—XJ	58
Rear Door Stationary Window Glass—XJ	46
Rear Door Window Glass Regulator—XJ	44
Rear Door Window Glass—XJ	45
Service Information	30

SERVICE INFORMATION

The door service procedures includes removal, installation and/or replacement of the following door components:

- Door handles.
- Armrests.
- Trim panels.
- Waterdams.
- Door restraints.
- Front doors.

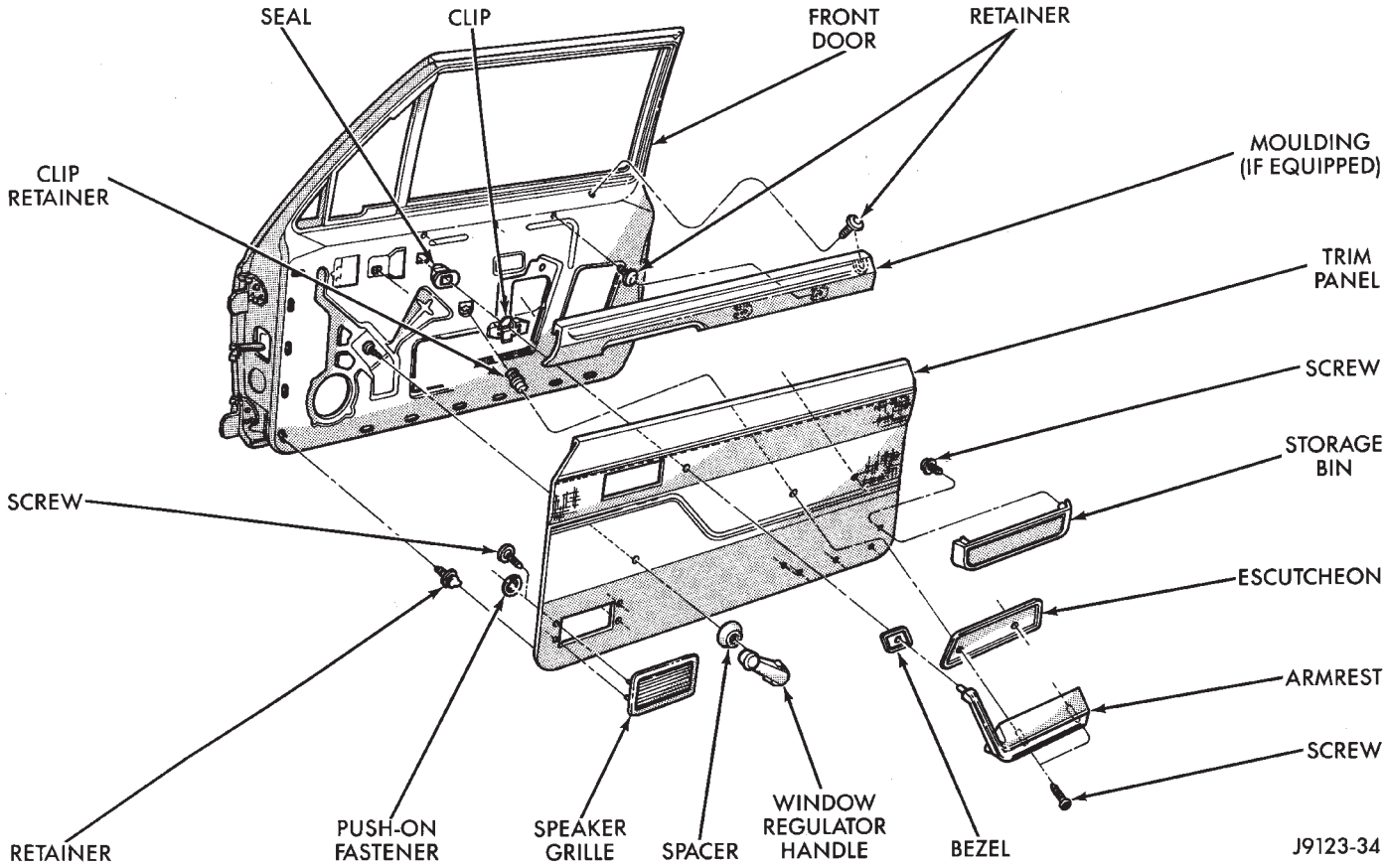

Fig. 1 Front Door Trim Panel

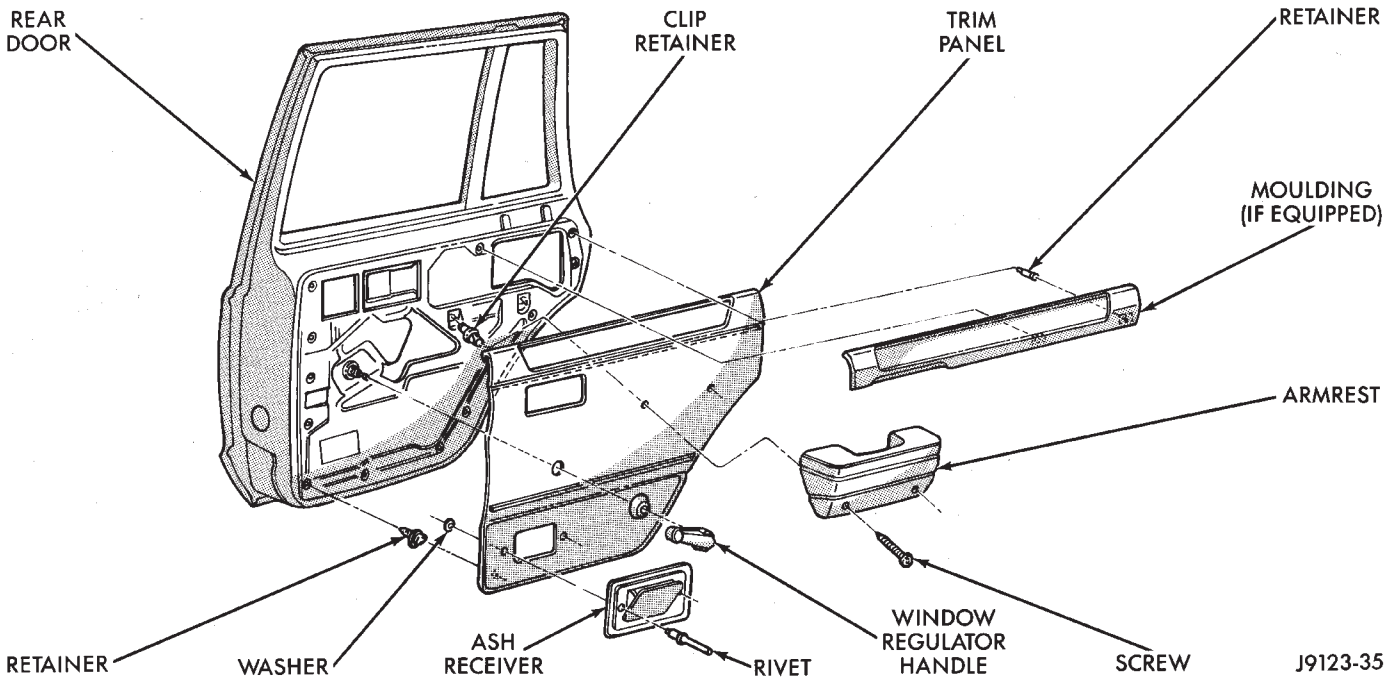

Fig. 2 Rear Door Trim Panel

- Rear doors.
- Window glass regulators.
- Key lock cylinders.
- Door half-hinges.
- Liftgate.
- Liftgate hinges.
- Liftgate gas support rod cylinders.
- Rocker panel seals.
- Moldings/weatherstrip seals.

DOOR TRIM PANEL—XJ

SERVICE INFORMATION

All attached components can be removed from door trim panels (Fig. 1 and 2).

REMOVAL

(1) Remove the door inside latch release handle screws (Fig. 3 and 4).

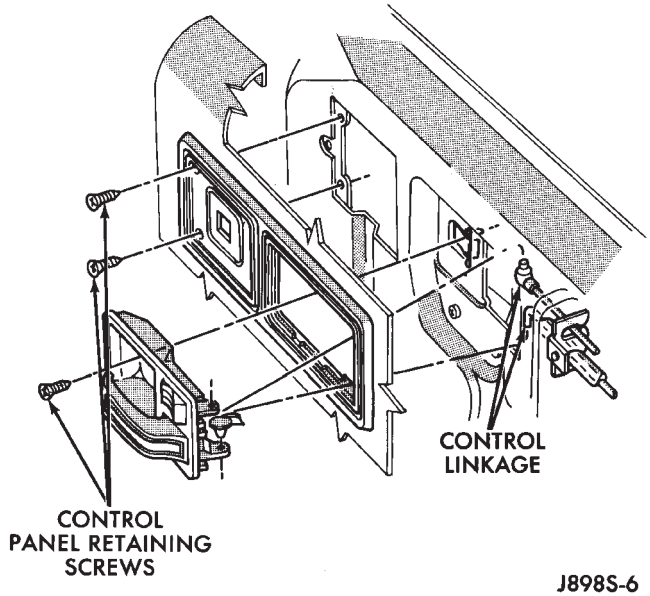

Fig. 3 Front Door Inside Latch Release Handle

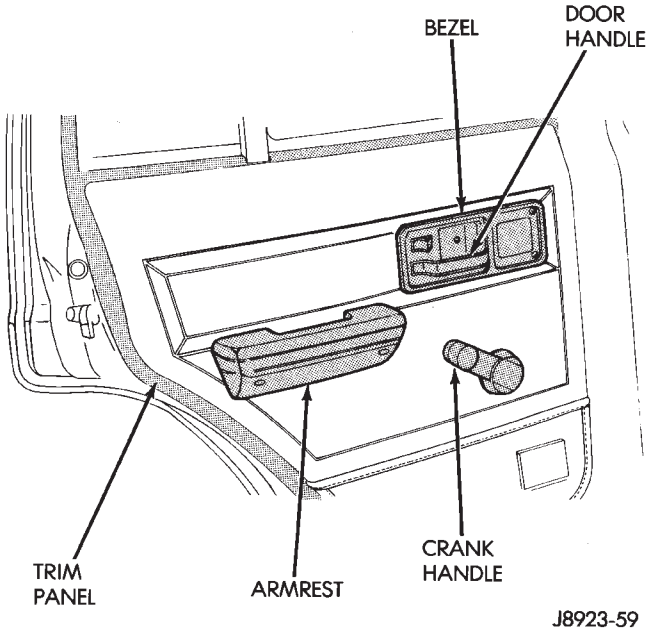

Fig. 4 Rear Door Inside Latch Release Handle

(2) Move the door handle outward and disconnect the handle-to-latch rods (Fig. 5). For vehicles equipped with power door locks/windows, disconnect the wire harness connector (Fig. 6).

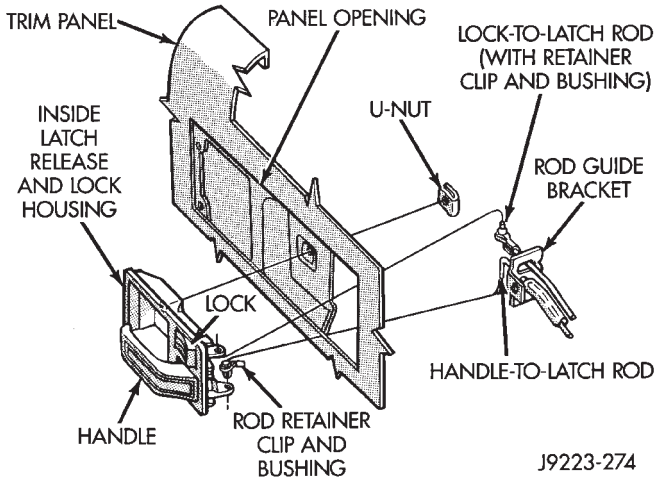

Fig. 5 Door Inside Latch Release Rods

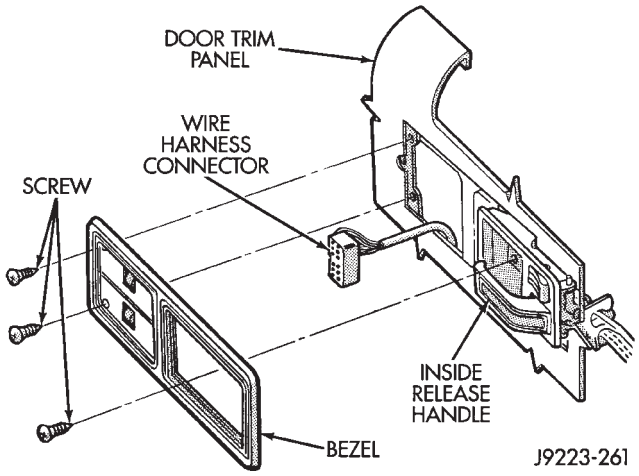

Fig. 6 Power Switch Wire Harness Connector

(3) Remove the regulator handle (Fig. 7) or, if equipped, power window switches and bezel.

(4) Remove the armrest lower screws (Fig. 8 and 9).

(5) Pull armrest straight outward from panel and remove.

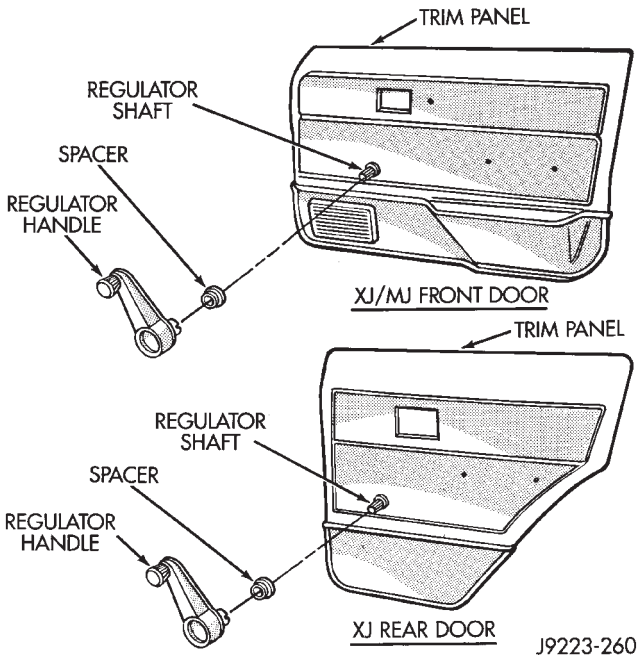

Fig. 7 Window Regulator Handles

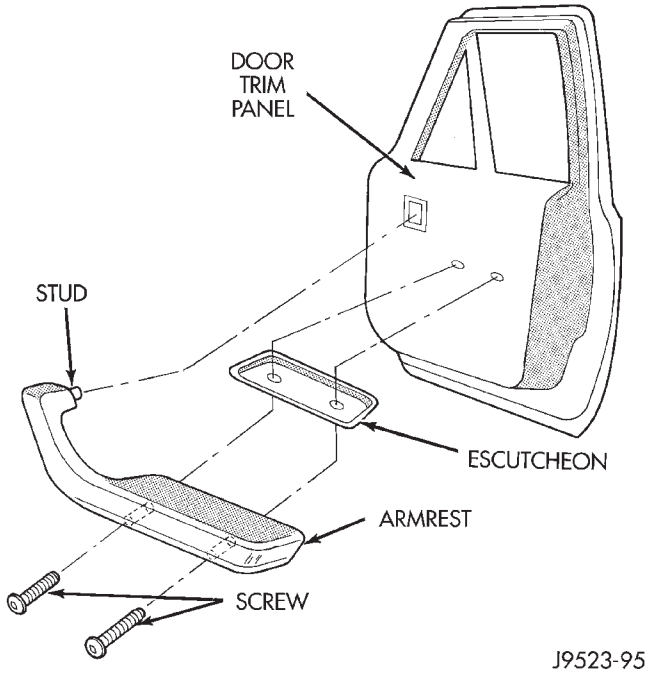

Fig. 8 XJ Front Door Armrest Removal/Installation

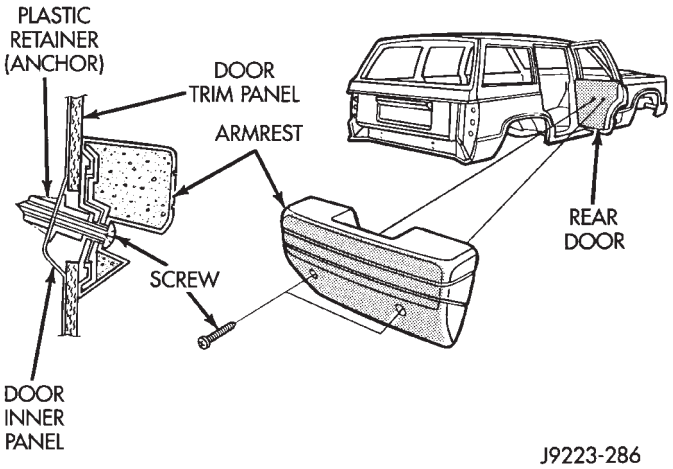

Fig. 9 XJ Rear Door Armrest Removal/Installation

(6) Remove the trim panel fasteners from door inner panel with a pry tool (use special tool C-4829) (Fig. 10).

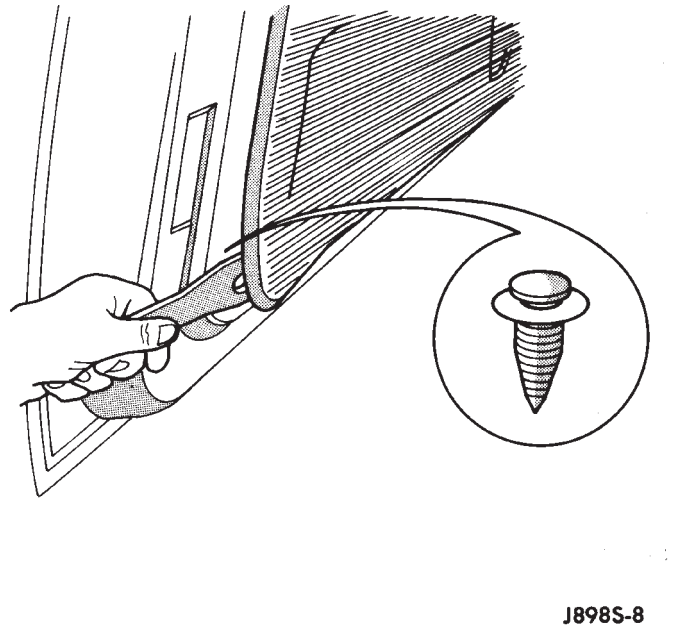

Fig. 10 Detaching Trim Panel Push-In Fasteners

(8) Remove the trim panel from door (Fig. 11).

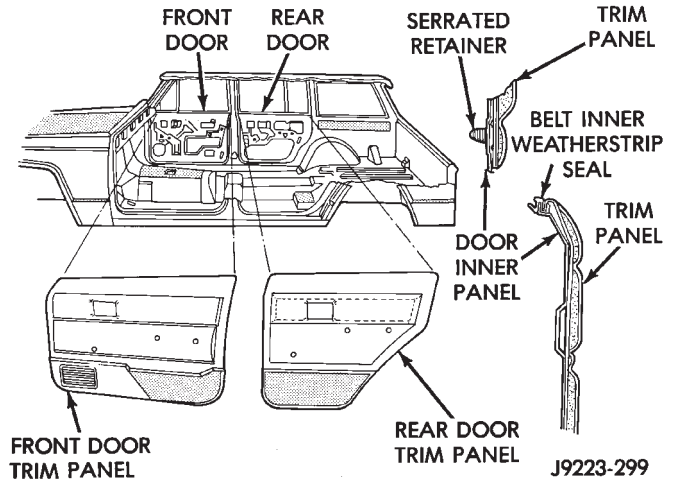

Fig. 11 Front and Rear Door Trim Panels

(9) If necessary, remove the waterdam from the door (Fig. 12, 13, 14 and 15).

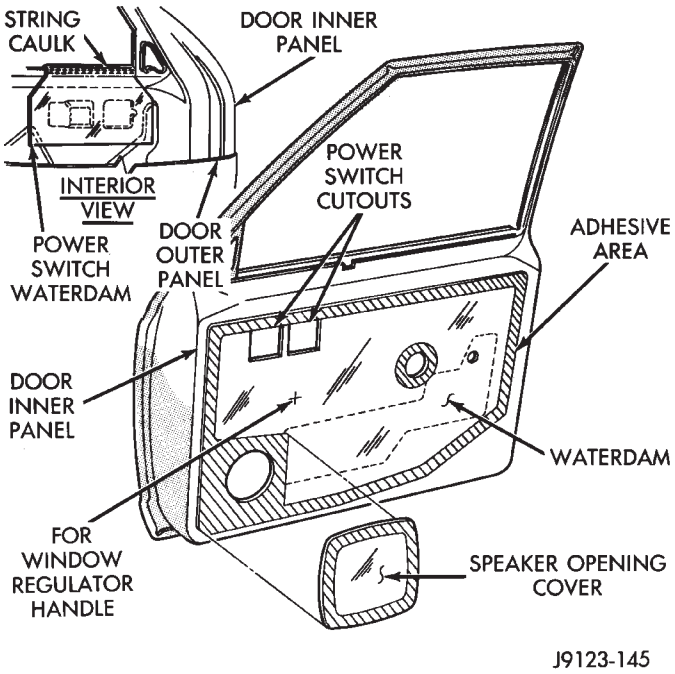

Fig. 12 Front Door Waterdam

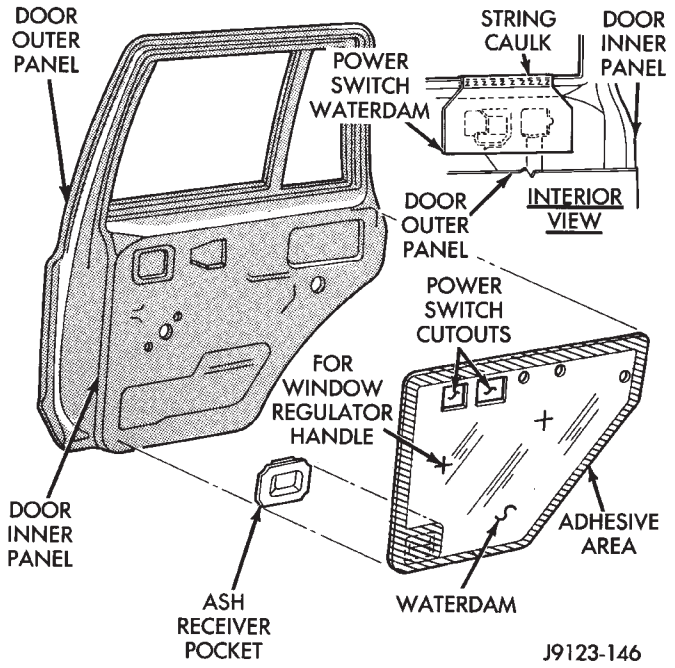

Fig. 13 Rear Door Waterdam

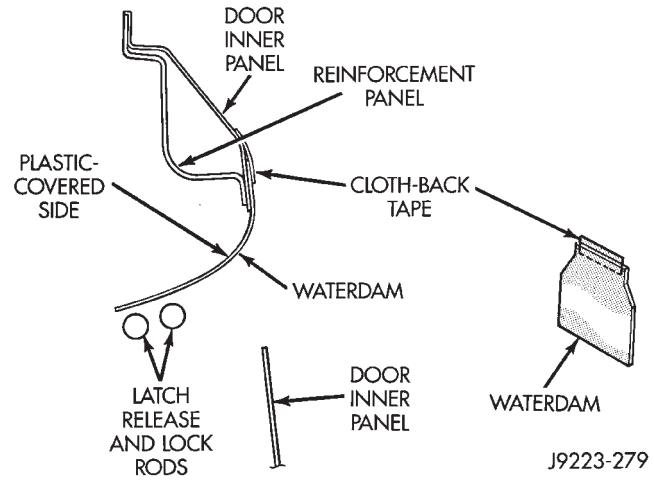

Fig. 14 Latch Release and Lock Rod Waterdam

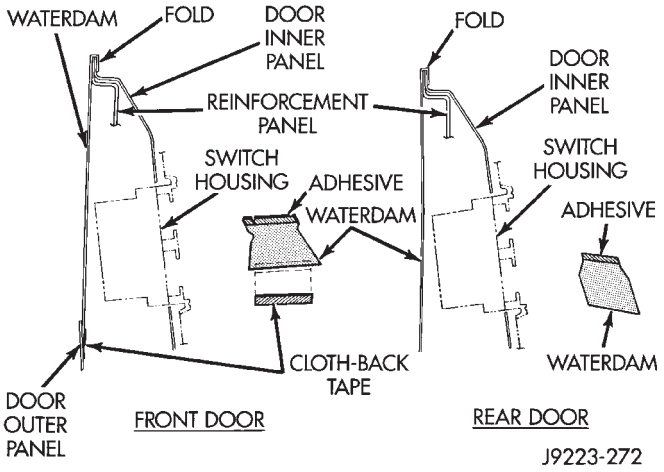

Fig. 15 Power Switch Waterdam

(10) If necessary, remove the storage bin panel and speaker grille from the front door trim panel (Fig. 16).

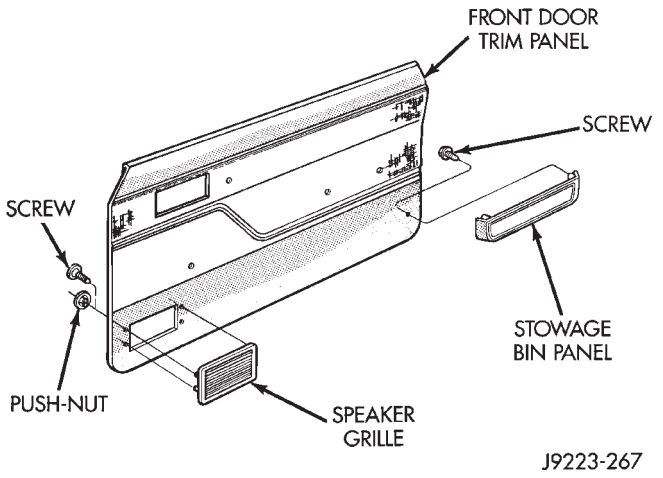

Fig. 16 Storage Bin Panel and Speaker Grille

(11) If necessary, remove the ash receiver tray housing from the rear door trim panel (Fig. 17).

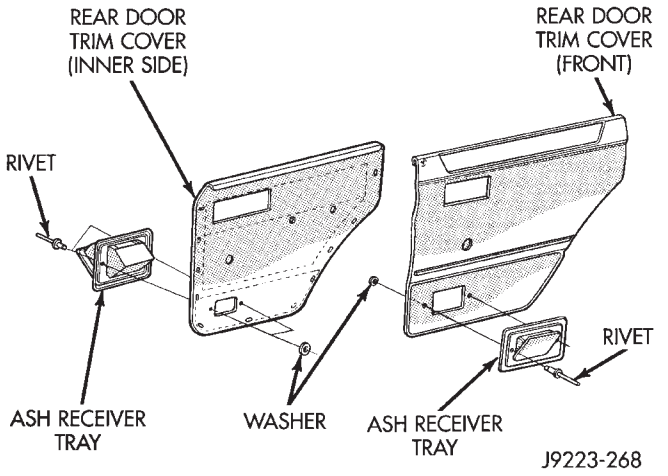

Fig. 17 Ash Receiver Tray Housing

(12) If necessary, replace the armrest upper retainer clip, retainer clip anchor and armrest support bracket (Fig. 18 and 19).

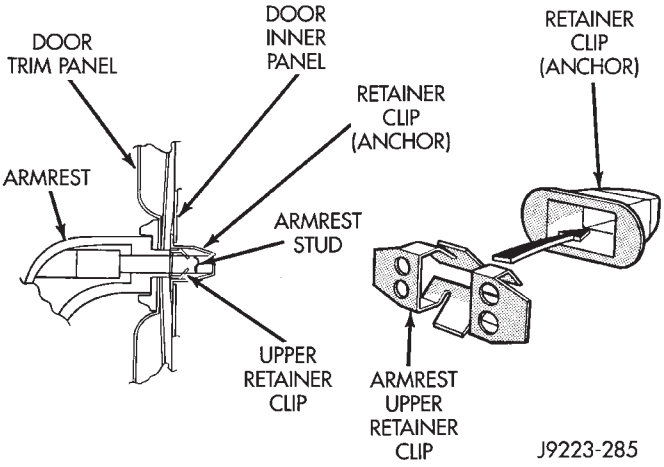

Fig. 18 Armrest Upper Retainer Clip and Anchor

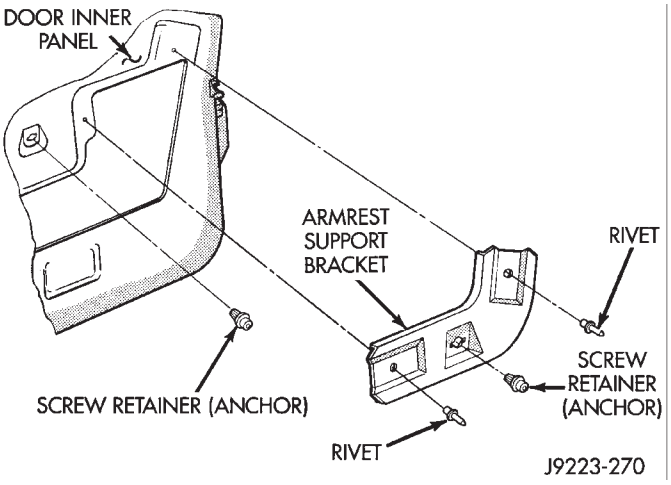

Fig. 19 Armrest Support Bracket

INSTALLATION

(1) If door waterdam was removed, apply sealant to the edges before installing.

(2) Position the waterdam on door inner panel (Fig. 20).

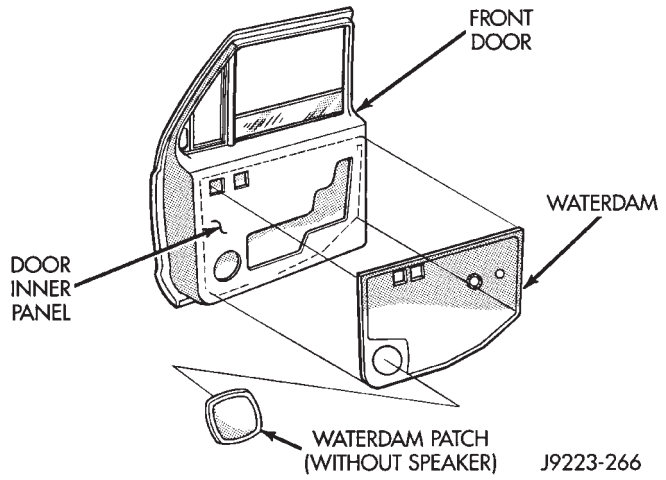

Fig. 20 Waterdam Installation

(3) If removed, install the storage bin panel and speaker grille on the front door trim panel.

(4) If removed, install the ash receiver tray housing on the rear door trim panel.

(5) Position the trim panel on the door inner panel and press the retainers inward.

(6) Install the armrest and window glass regulator handle. Or (if equipped) the power window switches and bezel. Tighten the armrest screws to 4 N·m (34 in-lbs) torque.

(7) Connect the rods to the inside latch release handle and install the handle. Tighten the screws to 2 N·m (16 in-lbs) torque. For vehicles with power door locks/windows, connect the wire harness connector.

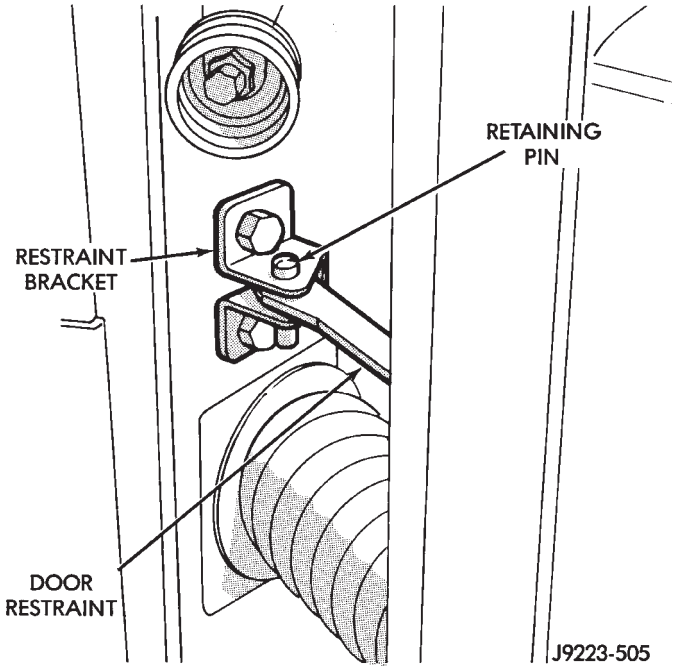

Fig. 1 Door Restraint Retaining Pin

DOOR REMOVAL/INSTALLATION—XJ

REMOVAL

(1) Remove the door restraint (check) retaining pin (Fig. 1) with a punch.

(2) For vehicles equipped with power windows and power door locks, remove the trim panel and disconnect all components. Slide the wire harness out of the boot and door (Fig. 2, 3, 4, 5 and 6)

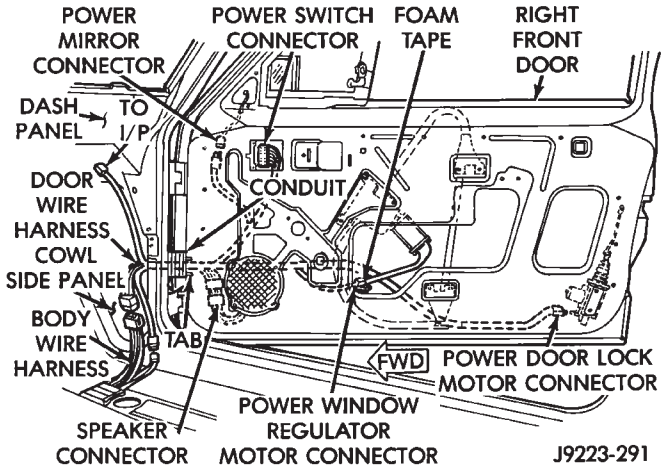

Fig. 2 Right Front Door Wire Harness Connectors

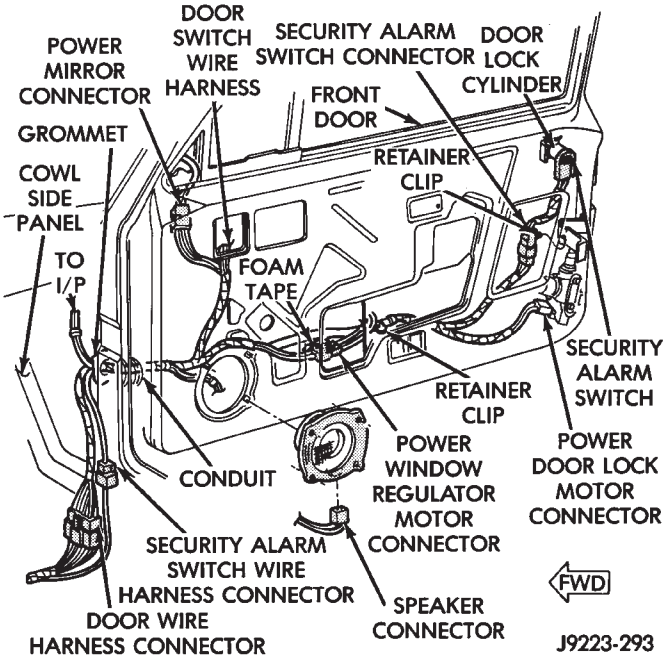

Fig. 3 Right Front Door Wire Harness Connectors—With Security Alarm Switch

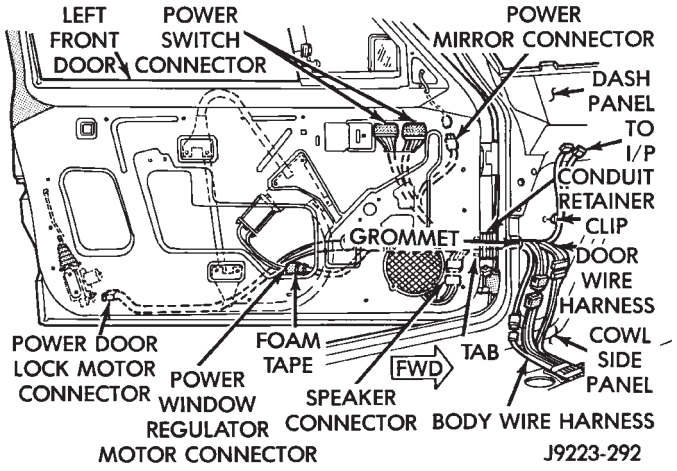

Fig. 4 Left Front Door Wire Harness Connectors

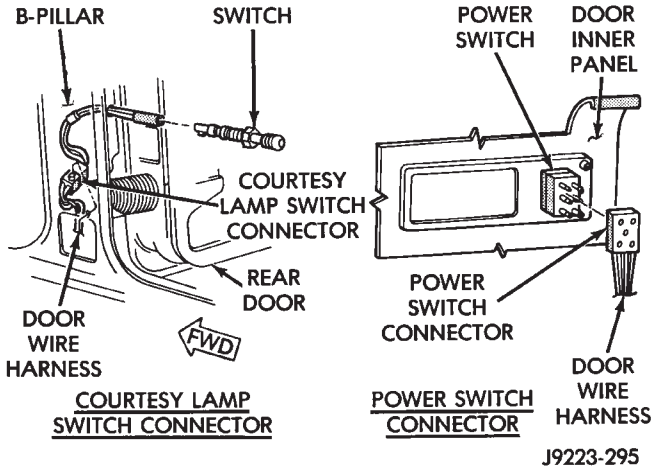

Fig. 6 Rear Door Courtesy Lamp and Power Switch Wire Harness Connectors

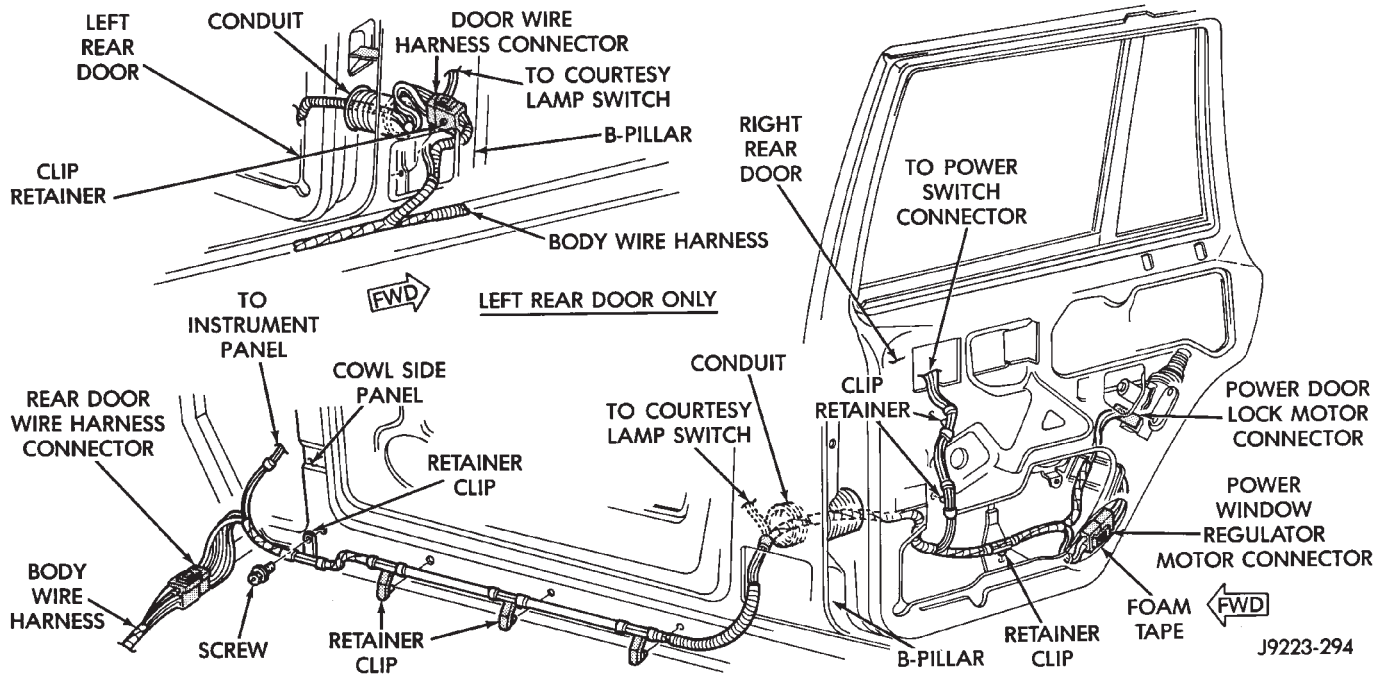

Fig. 5 Rear Door Wire Harness Connectors

(3) Remove the door hinge bolts, plates and shims (Fig. 7). Remove the door from the vehicle.

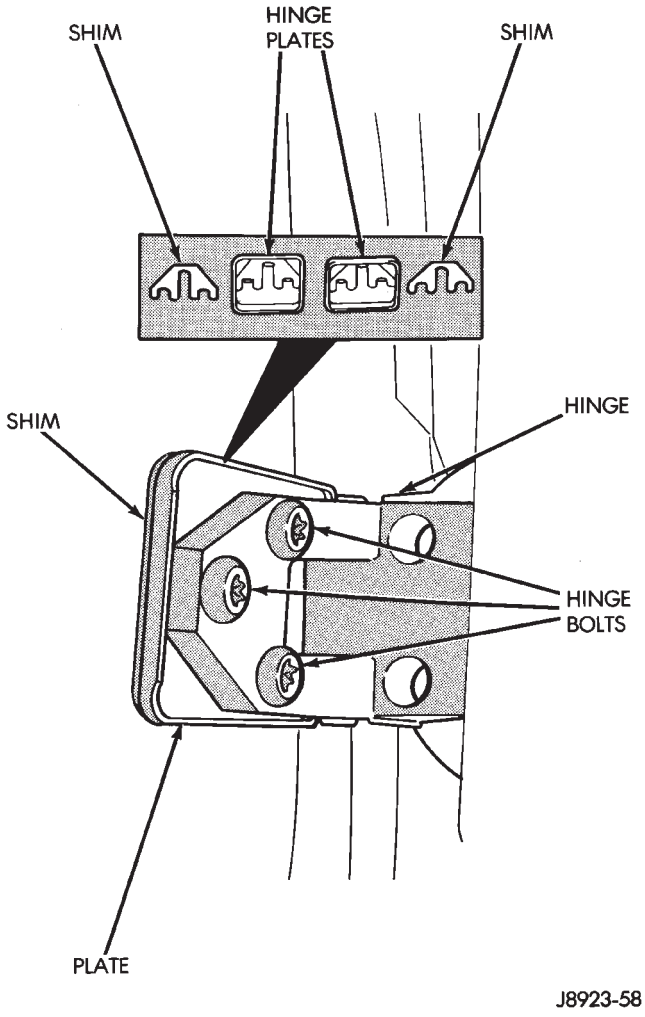

Fig. 7 Door Hinges, Bolts, Plates and Shims

(4) Identify and retain the door hinge plates and the shims for correct installation (Fig. 7).

INSTALLATION

(1) If a new front door is being installed, coat the door interior with anti-corrosion wax. Seal the door flange with sealant (Fig. 8).

(2) Before installing a replacement door, transfer original window glass, and components to replacement door (Fig. 9, 10, 11 and 12).

(3) Position the door in the body opening.

(4) Align the door hinges, plates and shims with bolt holes and install the hinge bolts.

(5) Position the door restraint (check) in the bracket with the holes aligned and insert the pin. Tap the pin to seat it in the bracket.

(6) Align/adjust the door as necessary. Tighten the hinge bolts to 35 N·m (26 ft-lbs) torque.

(7) Apply general purpose sealant around the door hinges/door face mating area (Fig. 8).

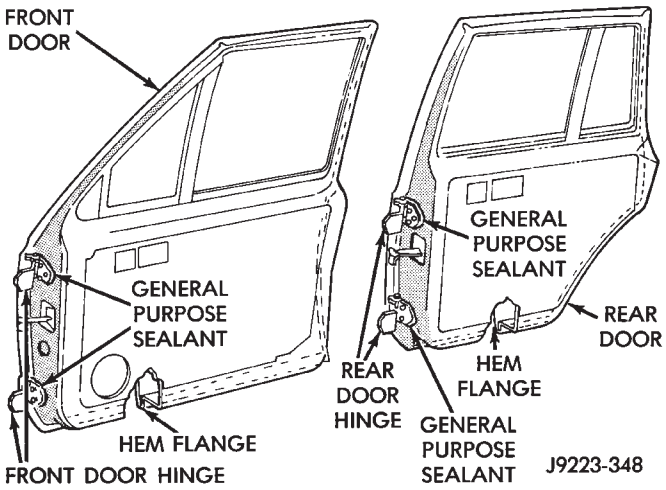

Fig. 8 Replacement Door Preparation

(8) Adjust/align the latch striker and latch as necessary.

(9) If applicable, route and connect the wire harness connectors.

(10) Install the door waterdam (if removed), trim panel, armrest and regulator handle.

DOOR ALIGNMENT ADJUSTMENT—MINOR

Minor adjustment for alignment of the door is made by moving the latch striker.

IN AND OUT

(1) Loosen the latch striker.

(2) Tap the latch striker inward if the door character line is outboard of the body character line or tap the latch striker outward if the door character line is inboard of the body character line.

(3) Inspect alignment. If correct, tighten striker with 71 N·m (52 ft. lbs.) torque.*

UP AND DOWN

(1) Loosen the latch striker.

(2) Tap the latch striker downward if the door character line is higher than the body character line or tap the latch striker upward if the door character line is lower than the body character line.

(3) Inspect alignment. If correct, tighten striker with 71 N·m (52 ft. lbs.) torque.*

* The center line of the striker anti-snag tab must be horizontal (plus or minus 6 mm).

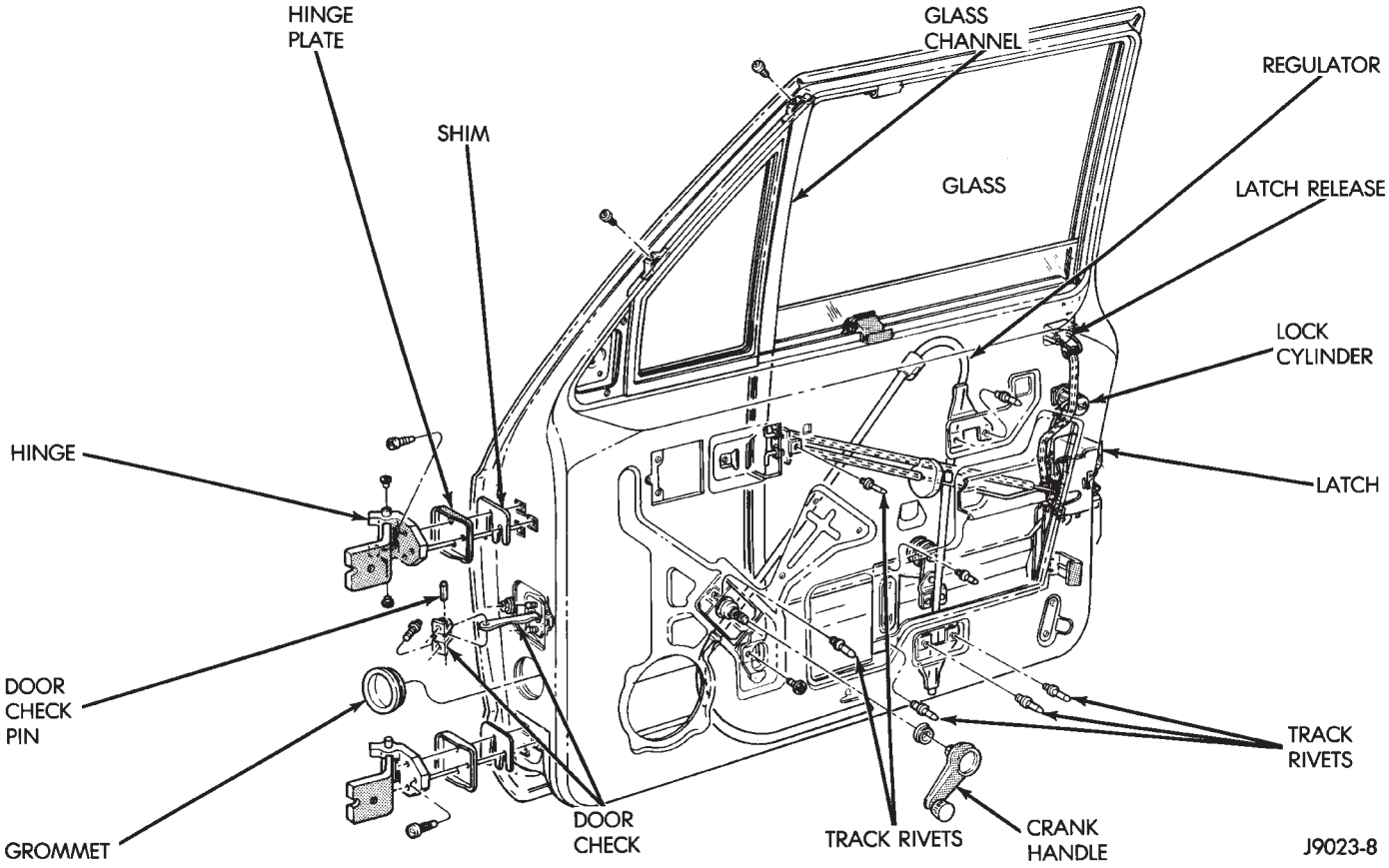

Fig. 9 Front Door Without Power Windows

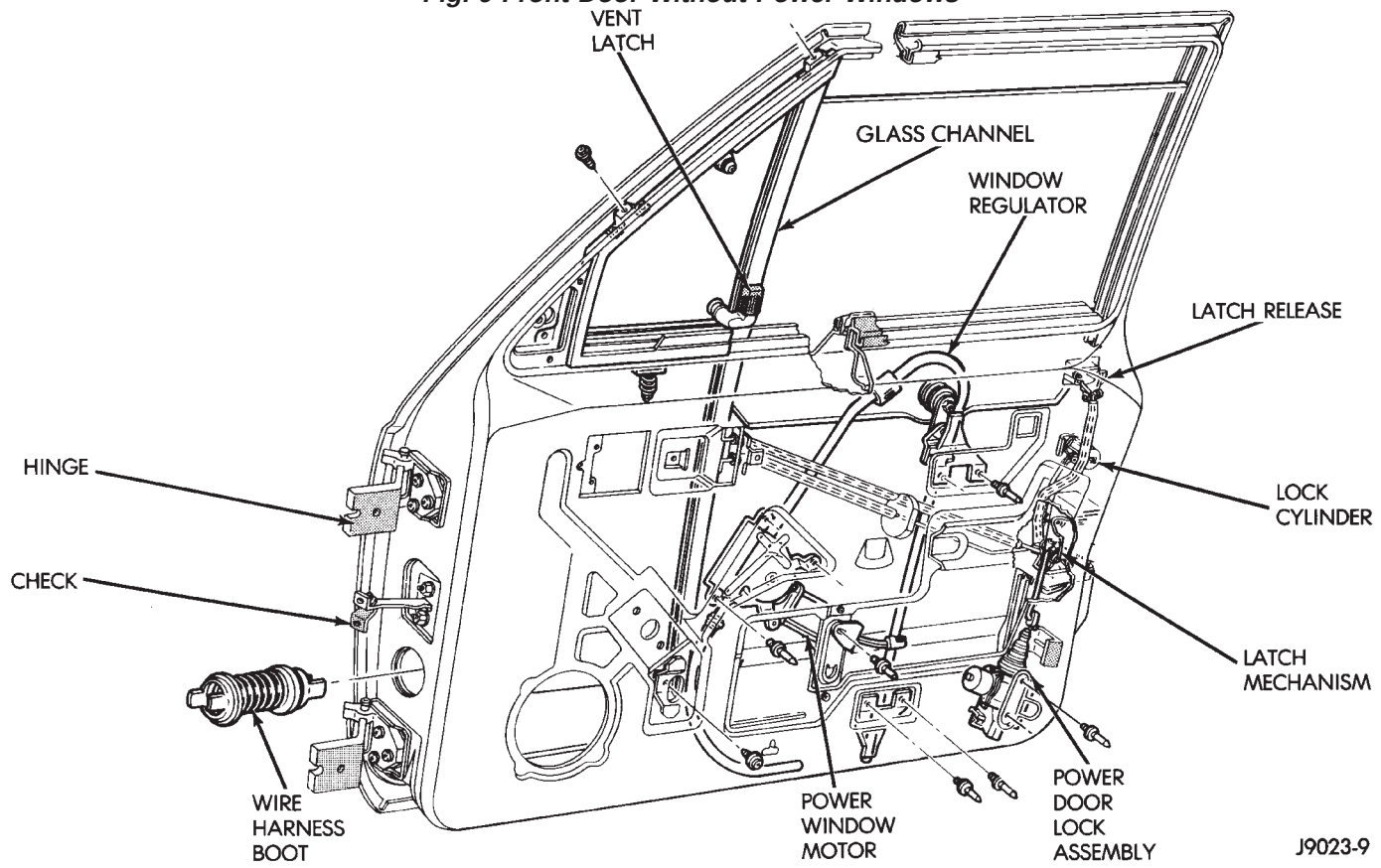

Fig. 10 Front Door With Power Windows

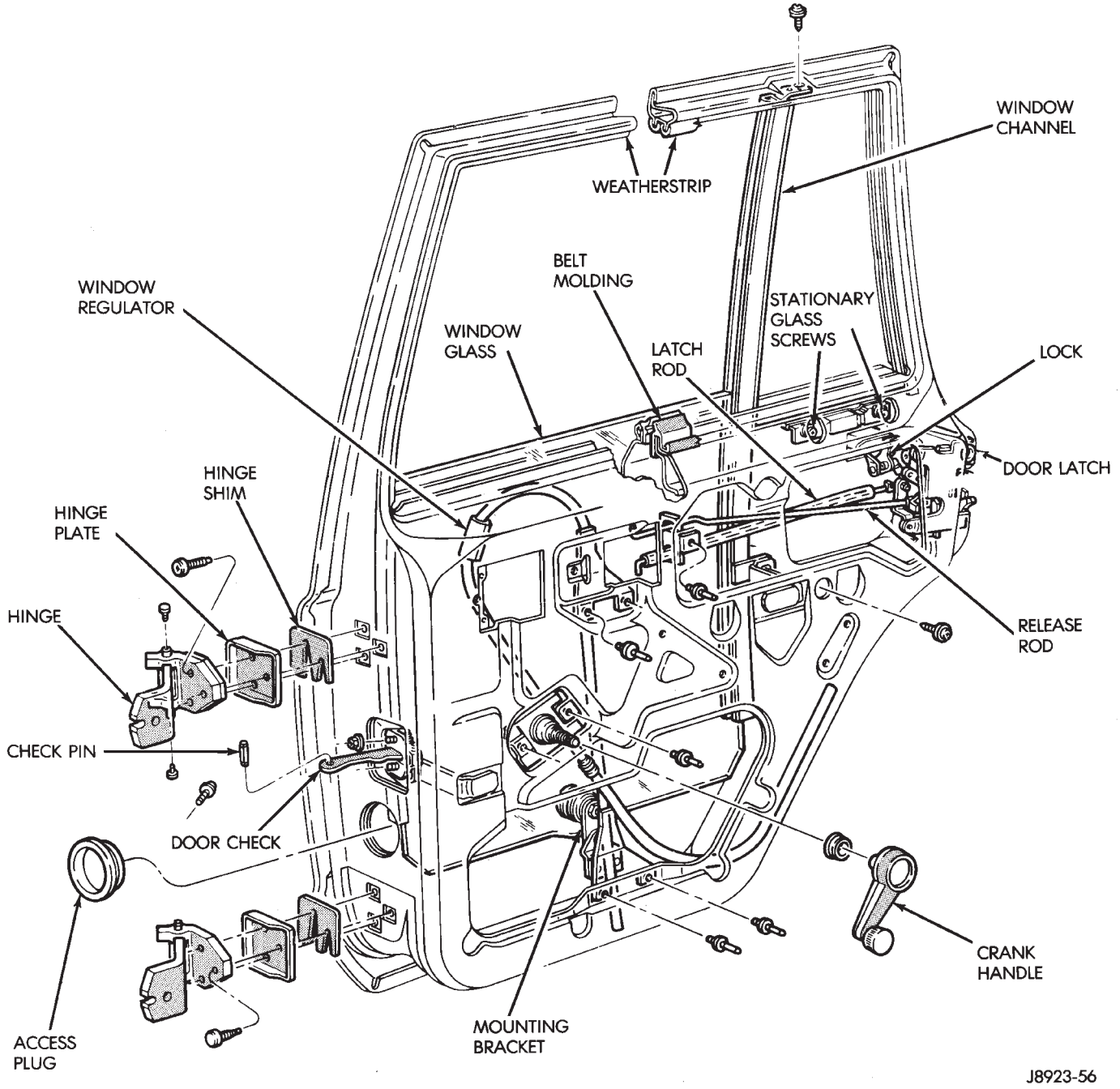

Fig. 11 Rear Door Without Power Windows

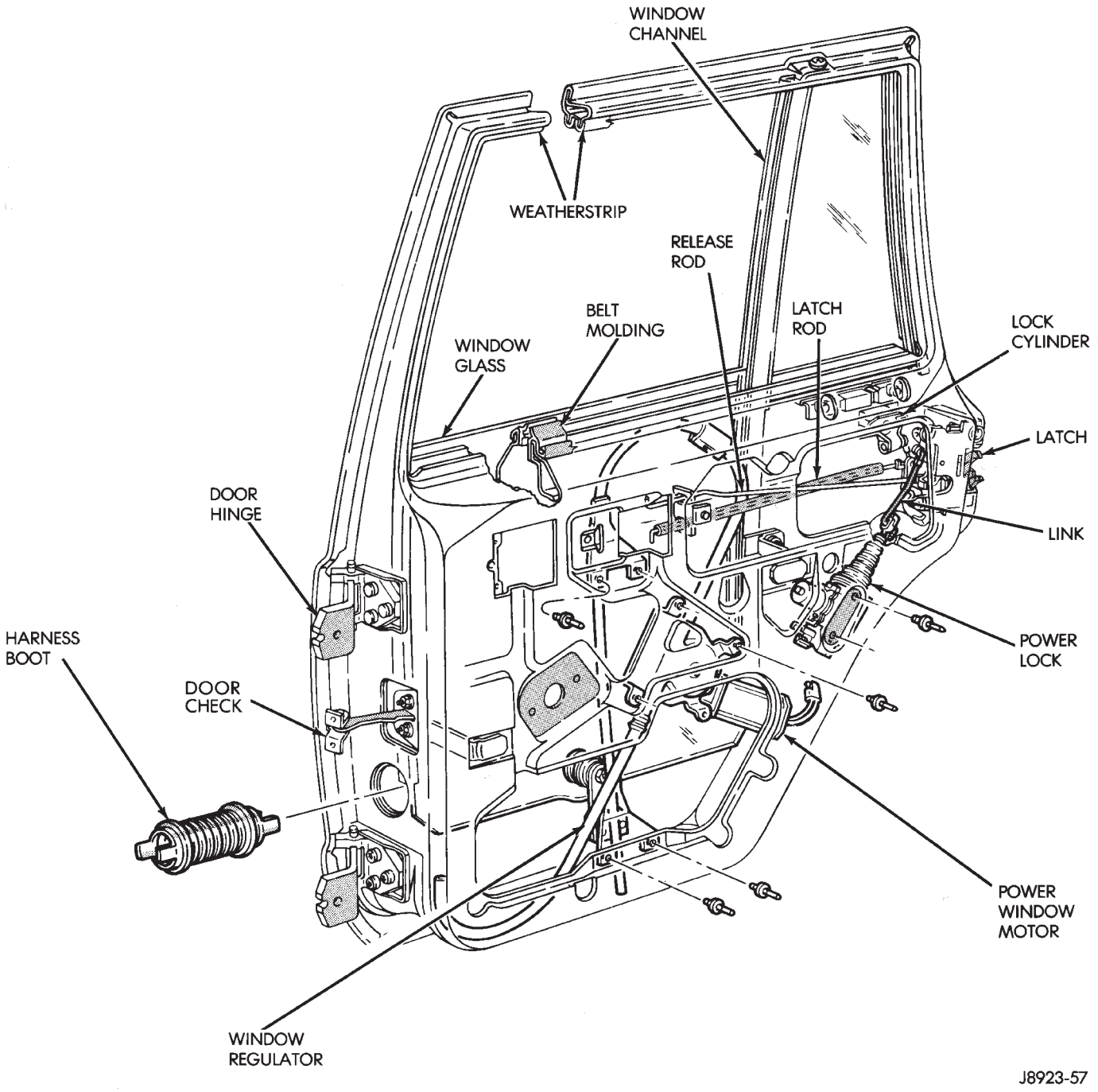

Fig. 12 Rear Door With Power Windows

DOOR ALIGNMENT ADJUSTMENT—MAJOR

Adjustment for alignment of the door is made by installing shims between hinge plates and door face (Fig. 13).

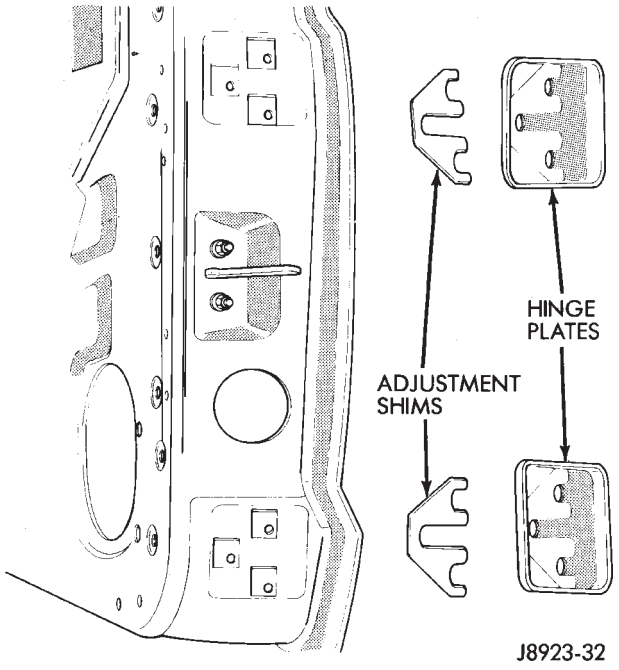

Fig. 13 Door Adjustment Shims

(1) If not loosened, loosen the door hinge bolts (Fig. 7).

(2) Add or remove shims as necessary to obtain the best door fit.

(3) Tighten door hinge bolts to 35 N·m (26 ft-lbs) torque after adjustment is completed.

(4) Apply general purpose sealant around the door hinges/door face mating area.

DOOR RESTRAINT REPLACEMENT—XJ

REMOVAL

(1) Remove the door trim panel.

(2) Front door: remove the door radio speaker from door inner panel.

(3) Remove the door restraint (check) retaining pin from the bracket with a punch (Fig. 14).

(4) Remove the nuts and remove the restraint via the speaker opening (front door) or access opening (rear door) in the door inner panel (Fig. 15 and 16).

INSTALLATION

(1) Position the door restraint in the door by way of the opening and install the nuts. Tighten the nuts to 10 N·m (7 ft-lbs) torque.

(2) Position the door restraint in bracket with the holes aligned and insert the retaining pin.

(3) Front door: install the radio speaker and door trim panel.

(4) Rear door: install the door trim panel.

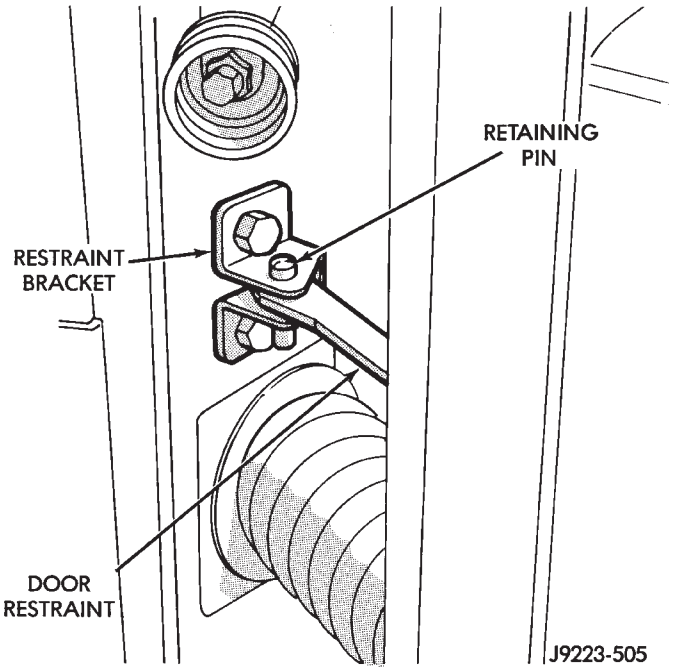

Fig. 14 Door Restraint (Check) Retaining Pin

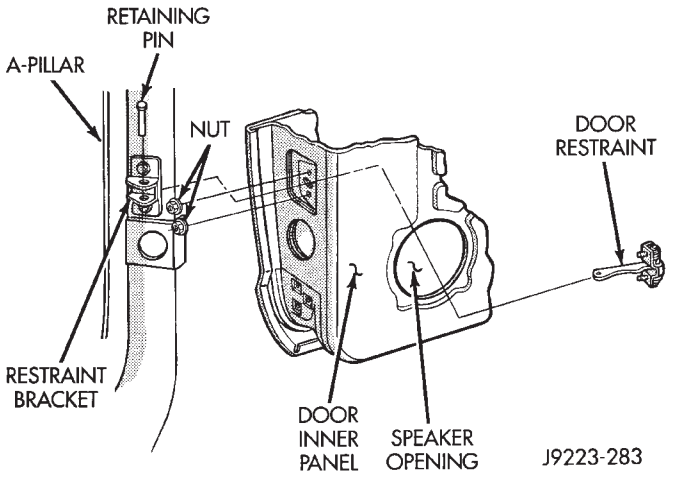

Fig. 15 Door Restraint (Check)—Front Door

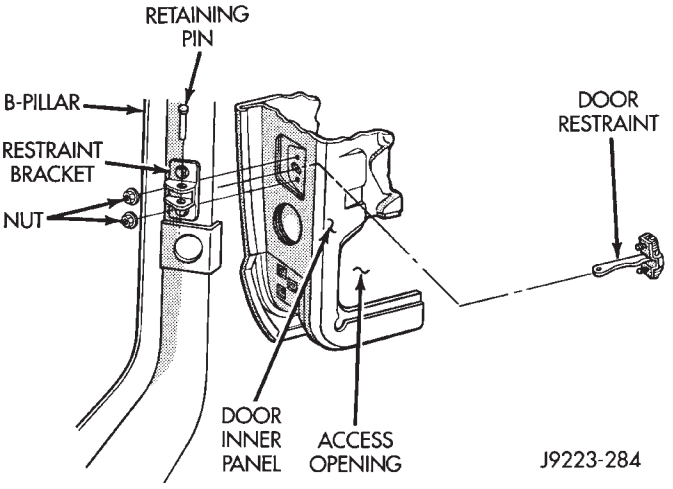

Fig. 16 Door Restraint (Check)—Rear Door

FRONT DOOR WINDOW GLASS REGULATOR—XJ

REMOVAL

(1) Remove the door trim panel and waterdam.

(2) Remove the window glass front channel bottom screw (Fig. 17).

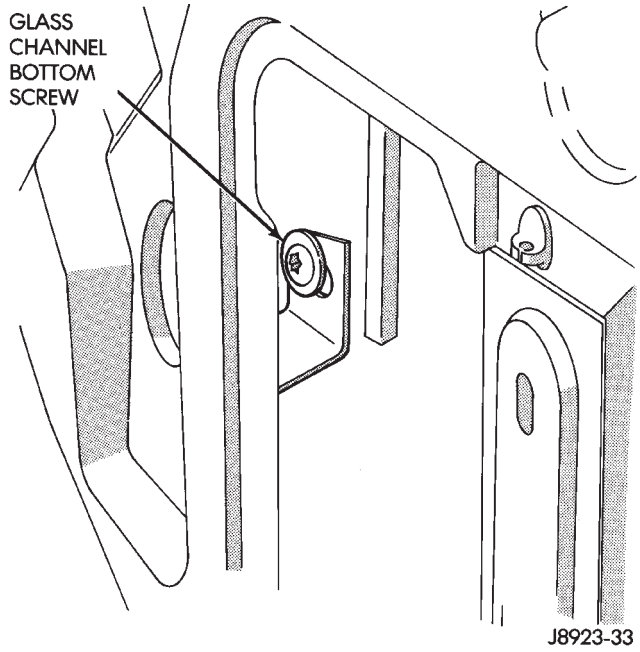

Fig. 17 Window Glass Front Channel Bottom Screw

(3) Remove the window regulator rivets by driving the rivet centers out with a punch. Remove the rivets with a 1/4-inch drill bit (Fig. 18 and 19).

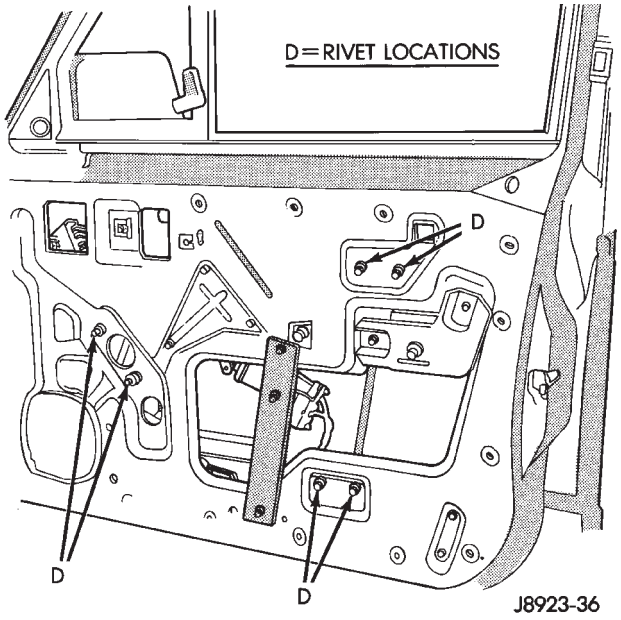

Fig. 18 Manual Window Regulator Rivets

(4) Lower the window to provide access to the regulator-to-glass screw.

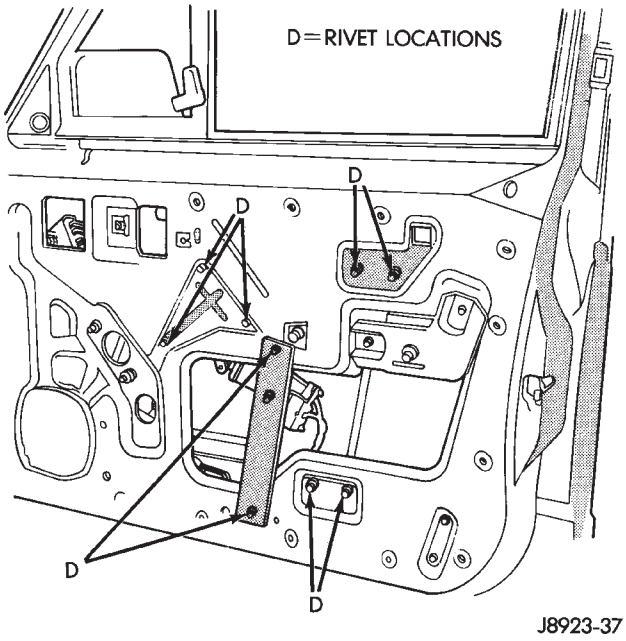

Fig. 19 Power Window Regulator Rivets

(5) Remove the regulator-to-glass screw, bushing and retainer from the regulator (Fig. 20).

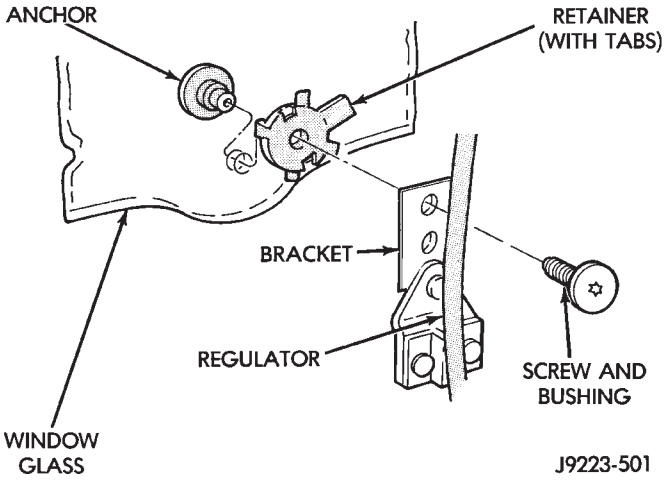

Fig. 20 Regulator-To-Glass Screw Removal/ Installation

(6) Lift the window glass upward and separate it from the regulator. Support the window glass.

(7) Remove the window glass regulator from the door.

INSTALLATION

(1) Position the window glass regulator within the door panels.

(2) Attach the regulator on door inner panel with replacement rivets or screws and nuts (Fig. 21, 22, 23 and 24).

(3) Remove the support and position window glass at regulator. Install the regulator-to-window retainer, bushing and screw.

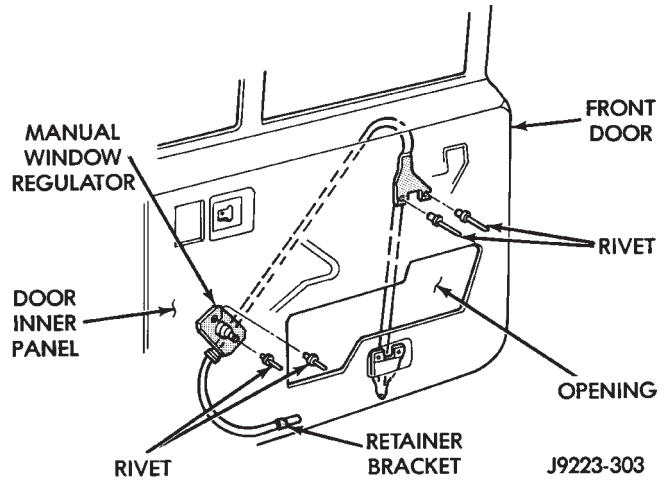

Fig. 21 Manual Regulator Installation—Upper Rivets

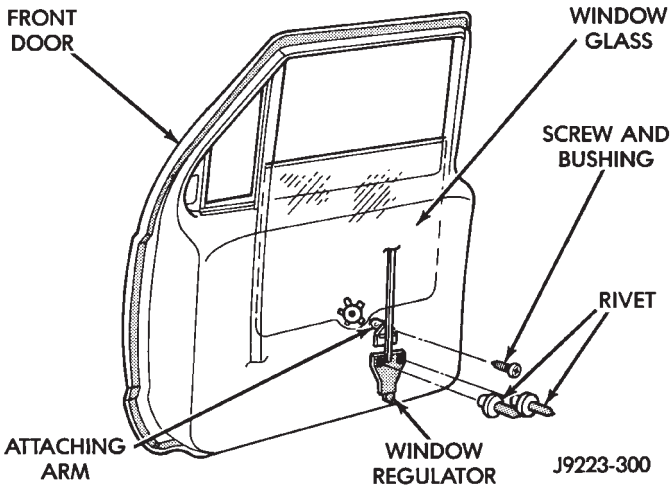

Fig. 22 Manual Regulator Installation—Lower Rivets and Glass Retaining Screw

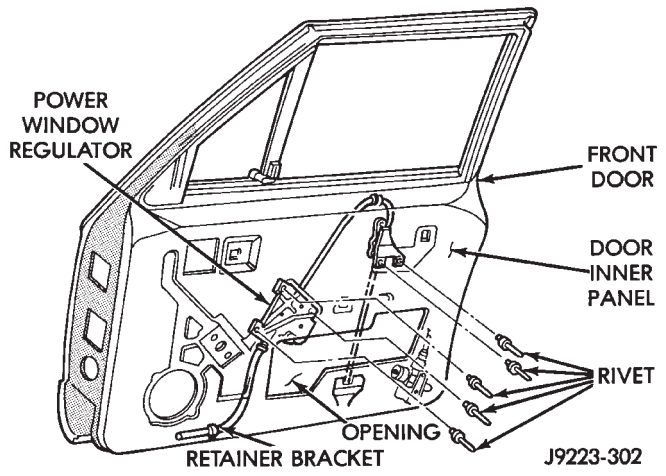

Fig. 23 Power Regulator Installation—Upper Rivets

(4) Tighten the regulator-to-glass screw to 4 N·m (36 in-lbs) torque.

(5) Install the glass channel bottom screw (Fig. 17). Tighten screw to 9 N·m (7 ft-lbs) torque.

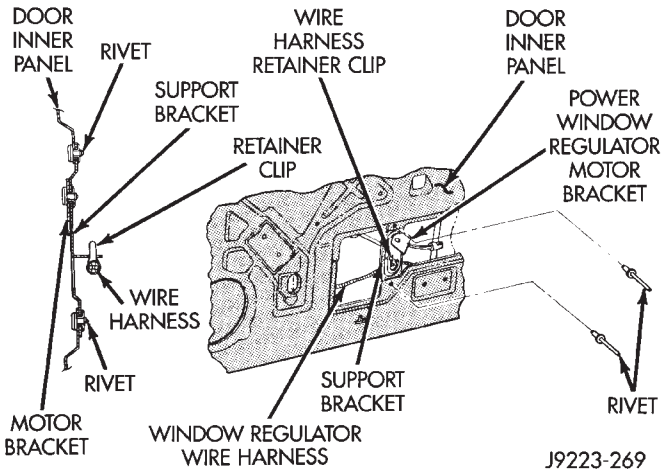

Fig. 24 Power Regulator Installation—Lower Rivets

(6) Attach the door waterdam to the door inner panel with sealant.

(7) Install the trim panel.

FRONT DOOR WINDOW GLASS—XJ

REMOVAL

(1) Remove the door trim panel and waterdam.

(2) Remove the window glass channel hardware, beltline molding and weatherstrip seals (Fig. 25 and 26).

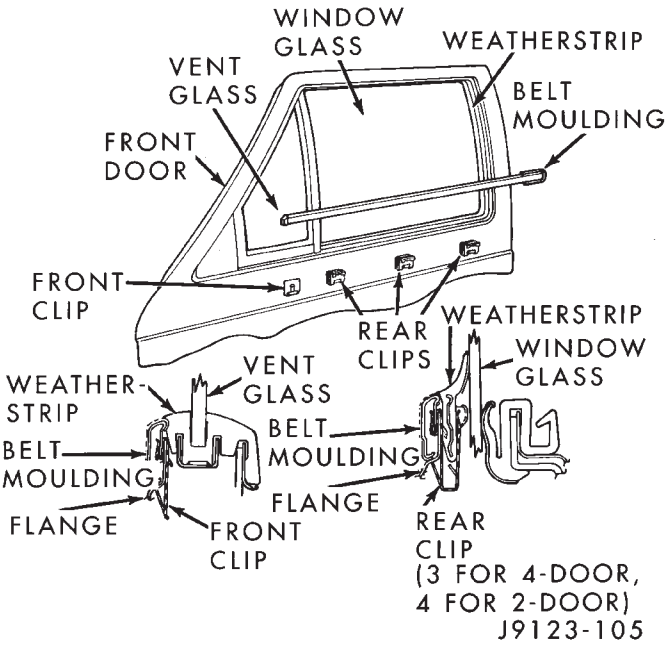

Fig. 25 Front Door Beltline Molding and Weatherstrip Seals

(3) Remove the glass channel bottom screw.

(4) Remove the regulator-to-window glass screw, bushing and retainer (Fig. 20).

(5) Lift the glass upward and out of the door.

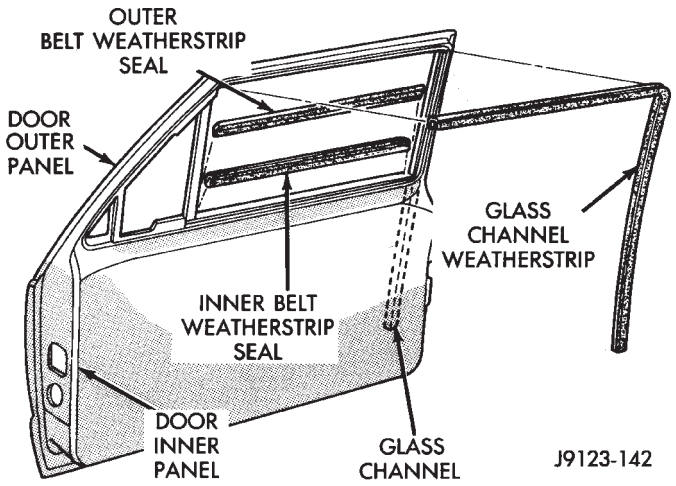

Fig. 26 Front Door Weatherstrip Seals

INSTALLATION

(1) Position the glass in the door and install the regulator-to-glass retainer, bushing and screw.

(2) Tighten the screw to 4 N·m (36 in-lbs) torque.

(3) Install the channel bottom screw. Tighten the screw to 9 N·m (7 ft-lbs) torque.

(4) Install the channel hardware, beltline molding and weatherstrip seals.(Fig. 27 and 28).

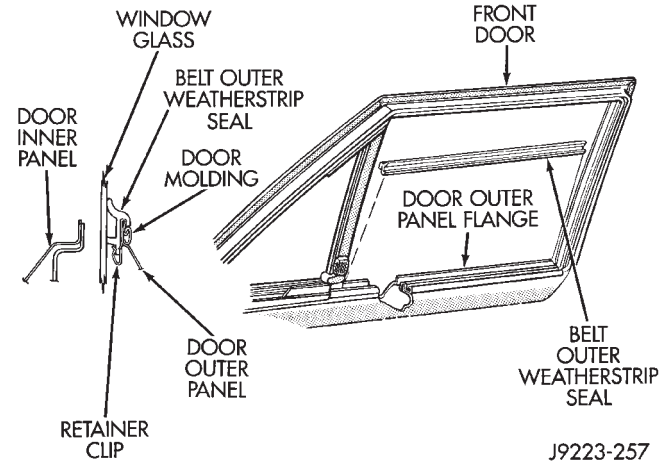

Fig. 27 Front Door Belt Outer Weatherstrip Seal

(5) Attach the door waterdam to the door inner panel with adhesive/sealant.

(6) Install the door trim panel.

REAR DOOR WINDOW GLASS REGULATOR—XJ

REMOVAL

(1) Remove the door trim panel and waterdam.

(2) Remove the window glass attaching screw, bushing and retainer from the regulator (Fig. 1). Support the glass.

(3) Remove the regulator rivets by driving out the rivet center with a punch. Next, drill out the rivet body with a 1/4 inch diameter drill bit (Fig. 2).

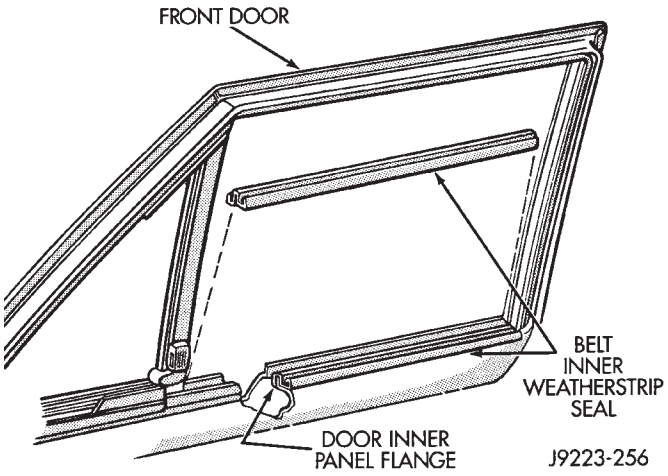

Fig. 28 Front Door Belt Outer Weatherstrip Seal

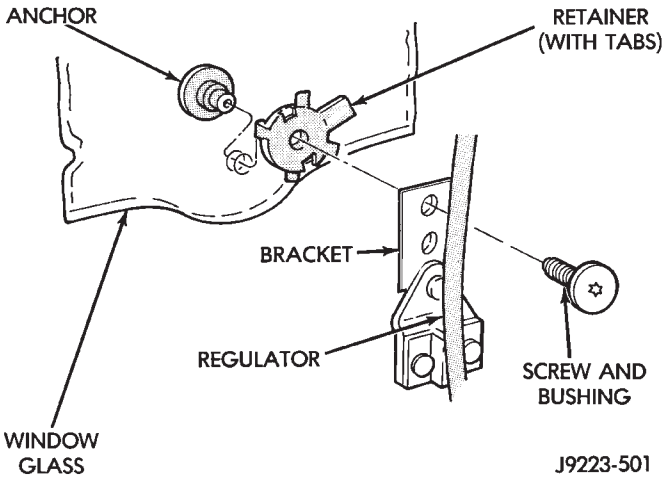

Fig. 1 Regulator-To-Glass Screw Removal/Installation

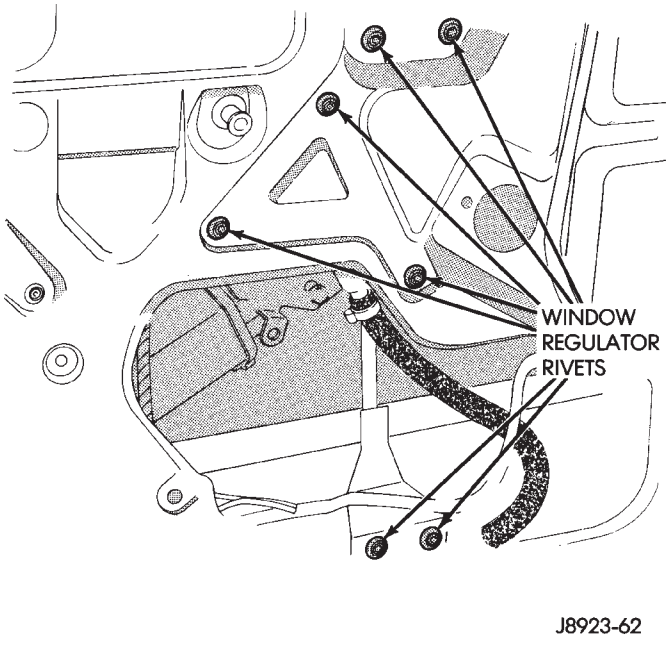

Fig. 2 Rear Door Window Regulator Rivets

(4) Power window: disconnect the wire harness connector from the regulator drive motor.

(5) Remove the regulator and drive motor, if equipped.

INSTALLATION

(1) Position window regulator and, if equipped, drive motor within the door panels.

(2) Attach the regulator to door inner panel with replacement rivets or with screws and nuts (Fig. 3, 4 and 5).

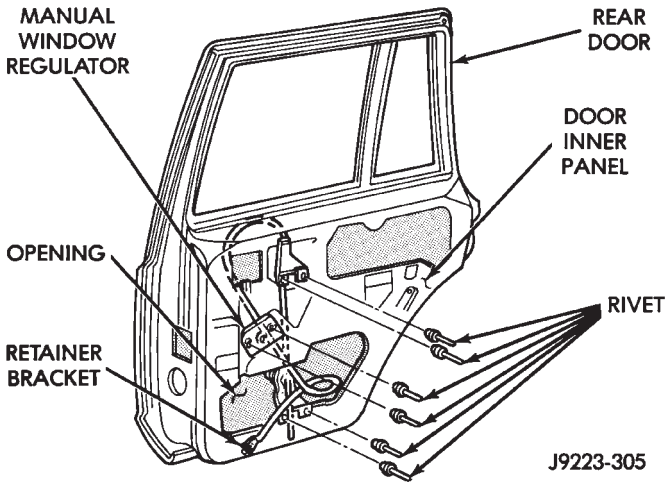

Fig. 3 Manual Regulator Rivet Installation

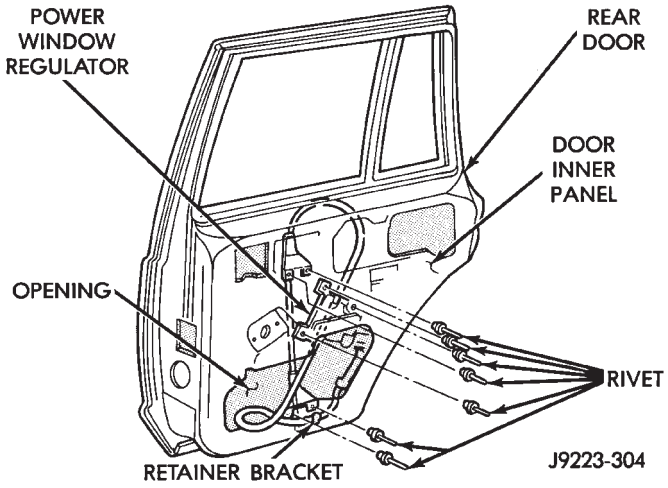

Fig. 4 Power Regulator Rivet Installation

(3) Connect the regulator wire harness connector.

(4) Position the window glass at the regulator and install the retainer, bushing and screw.

(5) Tighten the glass screw to 4 N·m (36 in-lbs) torque.

(6) Install the waterdam and trim panel.

REAR DOOR WINDOW GLASS—XJ

REMOVAL

(1) Lower the window glass.

(2) Pry the window beltline molding from the clips and remove the molding from the door.

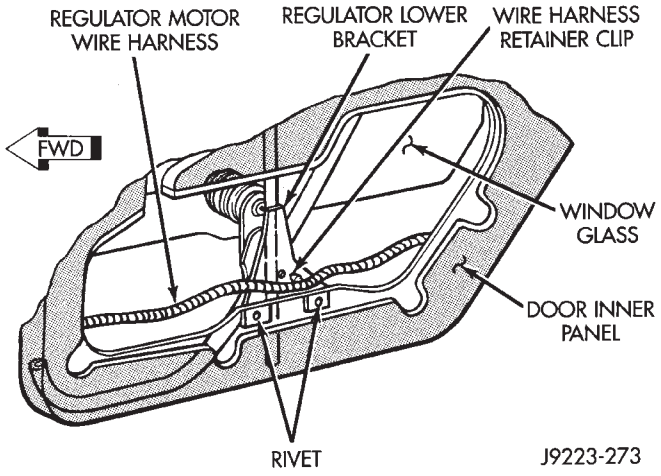

Fig. 5 Power Regulator Lower Bracket Rivet Installation

(3) Remove the window weatherstrip seals from the door (Fig. 6).

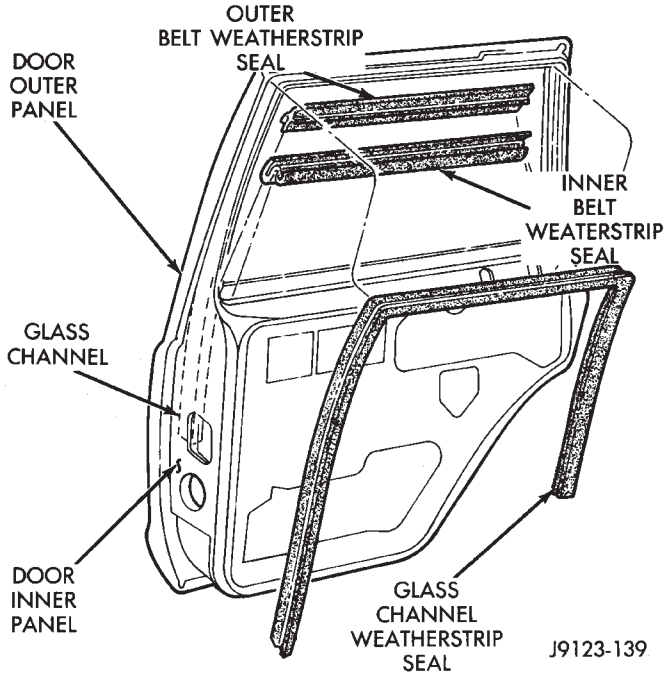

Fig. 6 Rear Door Window Weatherstrip Seals

(4) Remove the trim panel and waterdam from the door inner panel.

(5) Remove the channel/division bar screws and drill-out the rivet head to remove (Fig. 7 and 8).

(6) Tilt the channel/division bar forward and remove it from the door.

(7) Remove the window glass screw, bushing and retainer from the regulator (Fig. 9).

(8) Remove the window glass from door.

INSTALLATION

(1) Install the glass in the door, and install the retainer, bushing and screw (Fig. 9).

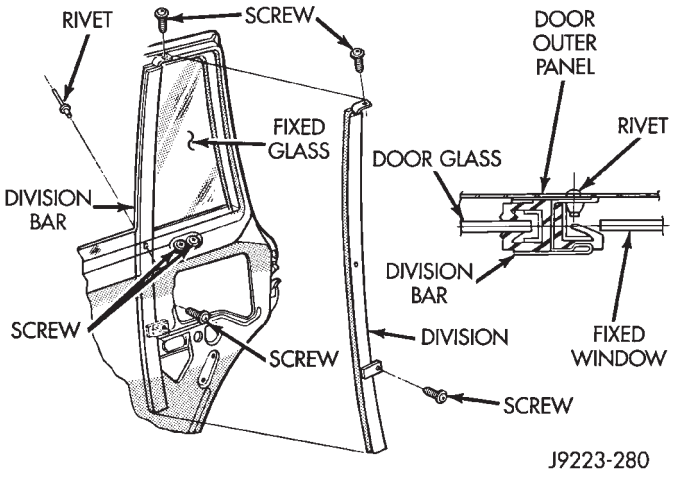

Fig. 7 Window Channel/Division Bar Screws and Rivet

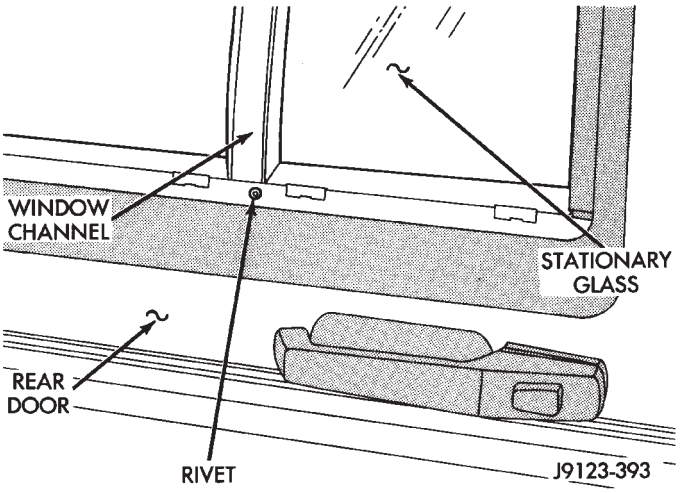

Fig. 8 Window Channel/Division Bar Rivet

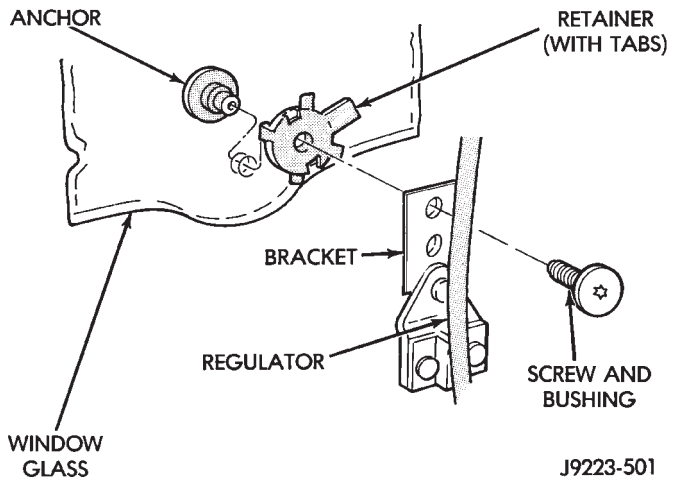

Fig. 9 Regulator-To-Glass Screw Removal/ Installation

(2) Tighten the glass attaching screw 6 N·m (53 in-lbs) torque.

(3) Install the window glass channel/division bar in the door.

(4) Install the window glass channel/division bar screws and rivet. Tighten the screws to 6 N·m (5 ft-lbs) torque.

(5) Install the window glass channel and belt weatherstrip seals (Fig. 10 and 11).

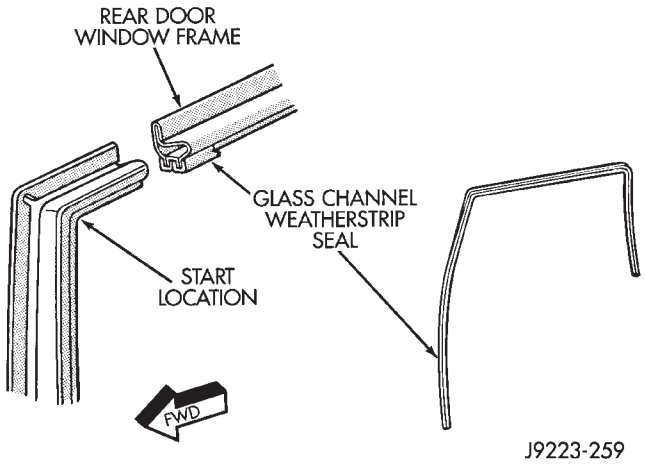

Fig. 10 Glass Channel Weatherstrip Seal

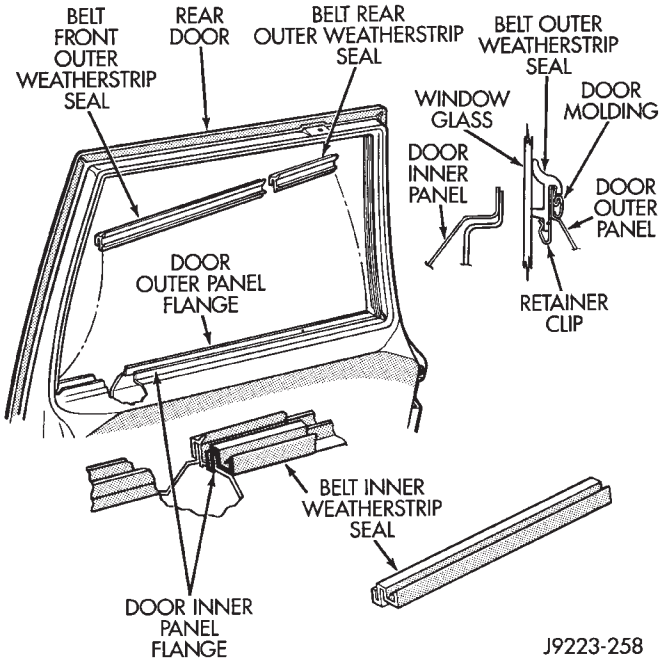

Fig. 11 Belt Weatherstrip Seals

(6) Install the window beltline molding.

(7) Install the door waterdam and trim panel.

REAR DOOR STATIONARY WINDOW GLASS—XJ

REMOVAL

(1) Lower the window glass.

(2) Pry the window beltline molding away from the clips and remove the molding from the door.

(3) Remove the window weatherstrip seals from the door.

(4) Remove the trim panel and waterdam from door inner panel.

(5) Remove the channel/division bar screws. Drill out the rivet head to remove it from the inner panel.

(6) Tilt the channel/division bar forward and remove it from the door.

(7) Remove the fixed glass support bracket bolts from the door inner panel reinforcement bracket (Fig. 12).

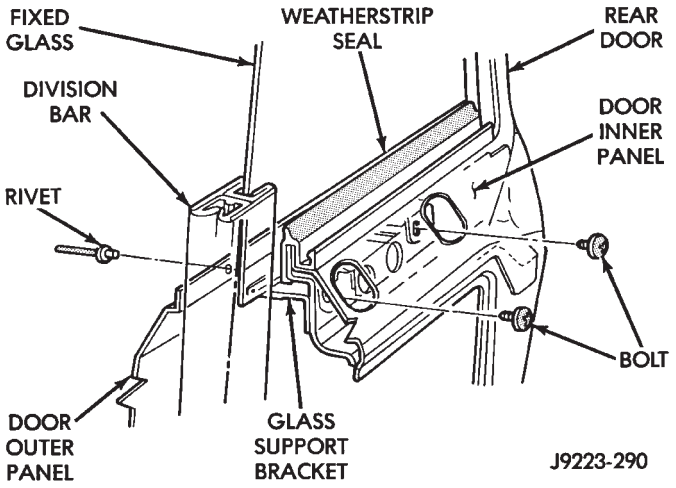

Fig. 12 Fixed Glass Support Bracket Bolts

(8) Remove the fixed glass from the door (Fig. 13).

INSTALLATION

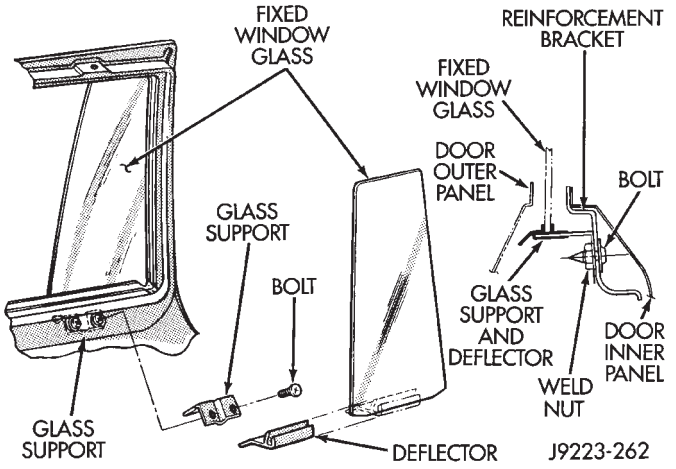

Fig. 13 Fixed Glass Removal/Installation

(1) Install the fixed glass in the door, and install the bolts in the reinforcement and support brackets.

(2) Tighten the bracket retaining bolts to 9 N·m (79 in-lbs) torque.

(3) Install the channel/division bar in the door.

(4) Install the channel/division bar screws and rivet. Tighten the screws to 6 N·m (5 ft-lbs) torque.

(5) Install the channel and belt weatherstrip seals.

(6) Install the beltline molding.

(7) Install the door waterdam and trim panel.

DOOR KEY LOCK CYLINDER—XJ

REMOVAL

(1) Remove the door trim panel and waterdam.

(2) Disconnect the door latch-to-lock cylinder rod at the door latch (Fig. 14).

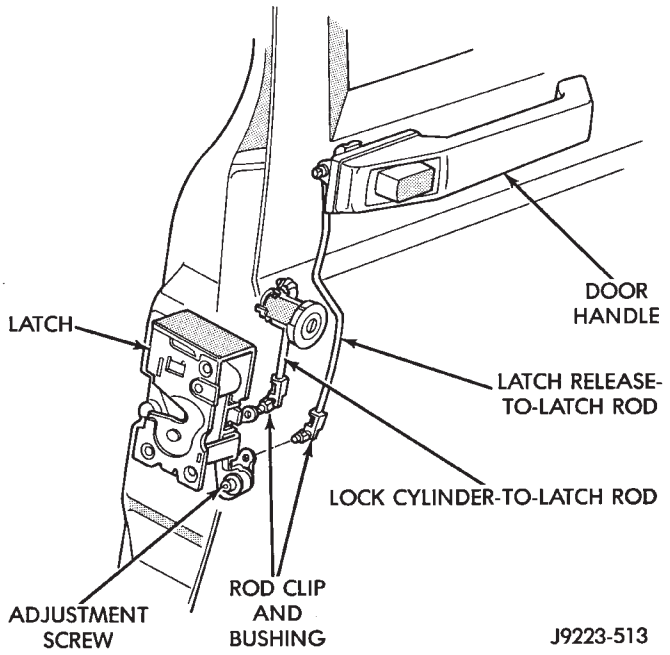

Fig. 14 Key Lock Cylinder and Door Latch

(3) If equipped, disconnect the security alarm switch connector from the lock cylinder (Fig. 15).

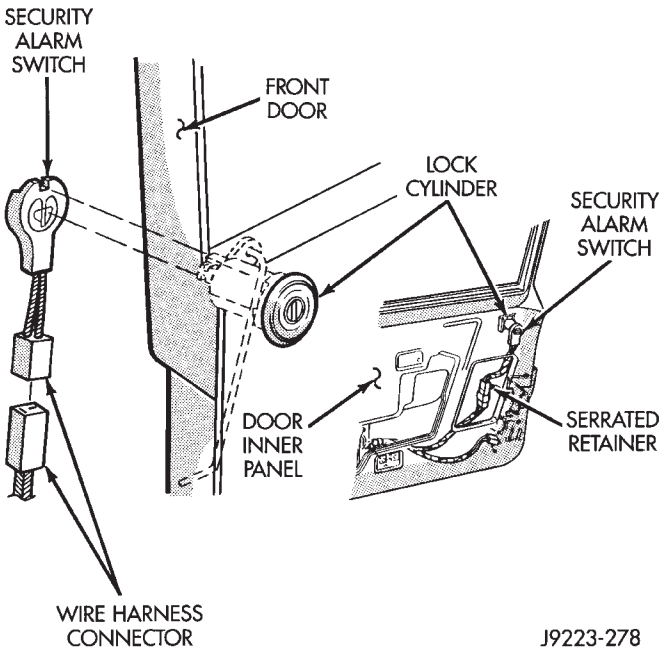

Fig. 15 Security Alarm Switch

(4) Remove the key lock cylinder retainer clip. Remove the lock cylinder, gasket and clip from the door opening (Fig. 16).

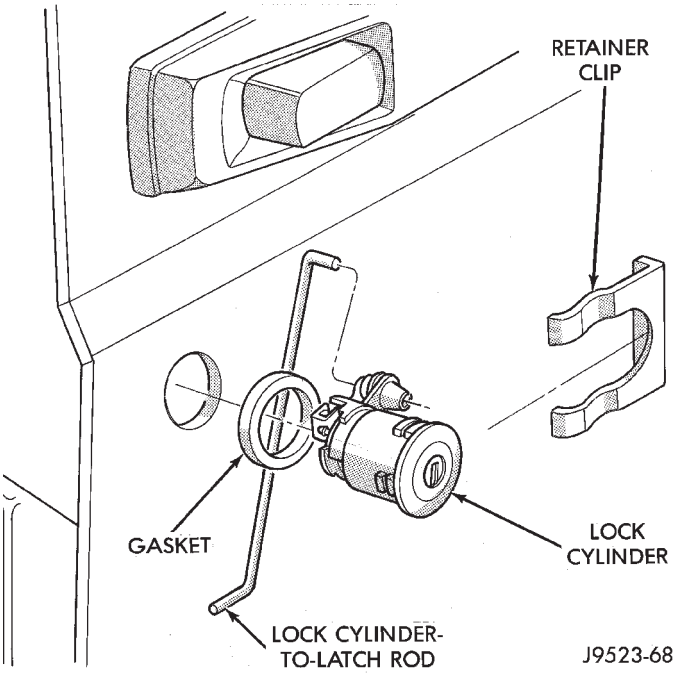

Fig. 16 Key Lock Cylinder Removal/Installation

(5) If applicable, remove the door latch-to-lock cylinder rod from the original lock cylinder. Connect it to the replacement lock cylinder.

INSTALLATION

(1) Position the lock cylinder and gasket in the door opening. Hold the lock cylinder in the opening with the retainer clip.

(2) Connect the door latch-to-lock cylinder rod to the door latch.

(3) If equipped, connect the security alarm switch connector to the lock cylinder.

(4) Test and, if necessary, adjust the door latch-to-lock cylinder rod operation.

(5) Install the door trim panel and waterdam.

(6) Adjust the door latch as described in DOOR LATCH ADJUSTMENT.

DOOR LATCH ADJUSTMENT—XJ

(1) Remove the access hole plug from the latch face (Fig. 17).

(2) Insert a 5/32-inch wrench through the hole and into the latch release lever adjustment screw and loosen.

(3) Press and release the outside door handle latch release button several times.

(4) Release the button and tighten adjustment screw to 3 N·m (30 in-lbs) torque.

(5) Test the release handle button and key lock cylinder for proper latch release.

(6) Install the door waterdam and trim panel.

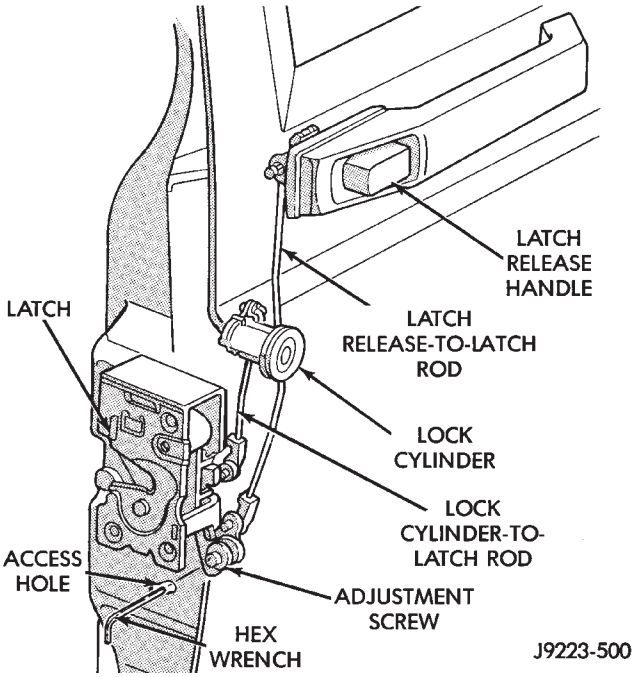

Fig. 17 Door Latch Adjustment

DOOR EXTERNAL HANDLE—XJ

REMOVAL

(1) Remove the door trim panel and waterdam.

(2) Remove the access hole cover and remove the door handle nuts (Fig. 18).

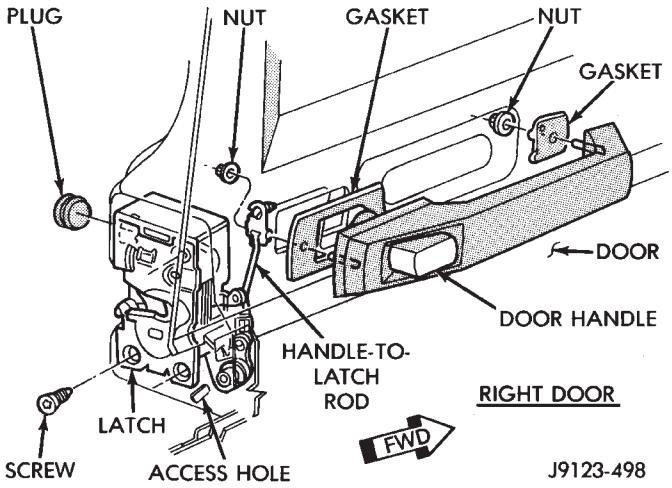

Fig. 18 Door External Handle Removal/Installation

(3) Disconnect the handle-to-latch rod from the handle latch release lever arm.

(4) Remove the nuts and handle from the door.

(5) Remove the gaskets from the door outer panel surface, if necessary.

INSTALLATION

(1) Assemble the replacement door handle, if necessary (Fig. 19). Apply silicone spray lubricant to the components.

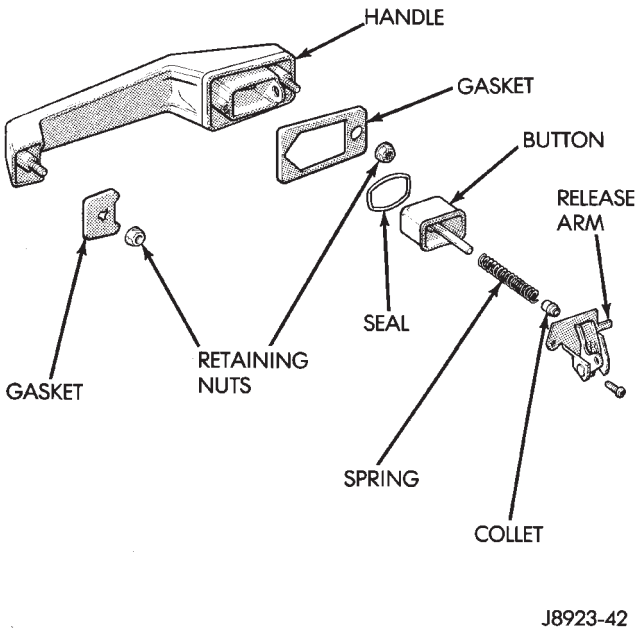

Fig. 19 Door Handle Components

(2) If the original gaskets were removed, position the replacement gaskets on the handle. Position the handle on the door outer panel.

(3) Install and tighten the handle nuts.

(4) Connect the latch-to-handle rod to the handle latch release lever arm.

(5) Install the door waterdam and trim panel.

(6) Adjust the door latch as described in DOOR LATCH ADJUSTMENT.

DOOR LATCH—XJ

REMOVAL

(1) Remove the access plug located at the upper end of the door (Fig. 20).

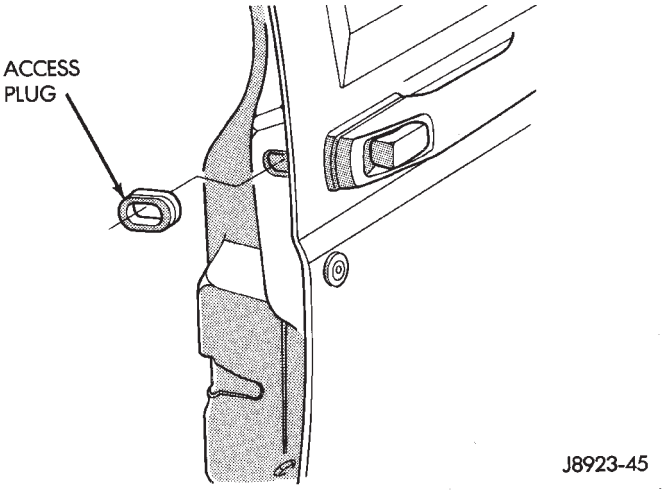

Fig. 20 Access Plug

(2) Remove the door trim panel and waterdam.

(3) Remove the door external handle from the door outer panel.

(4) Remove the door latch screws (Fig. 21).

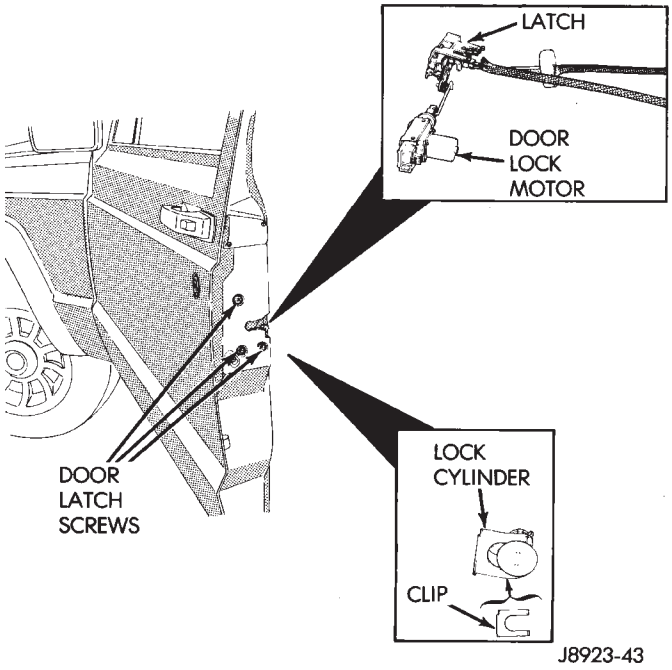

Fig. 21 Door Latch Retaining Screws

(5) Remove the retainer clip and key lock cylinder from the door outer panel.

(6) Disconnect all the rods from the door latch (Fig. 22).

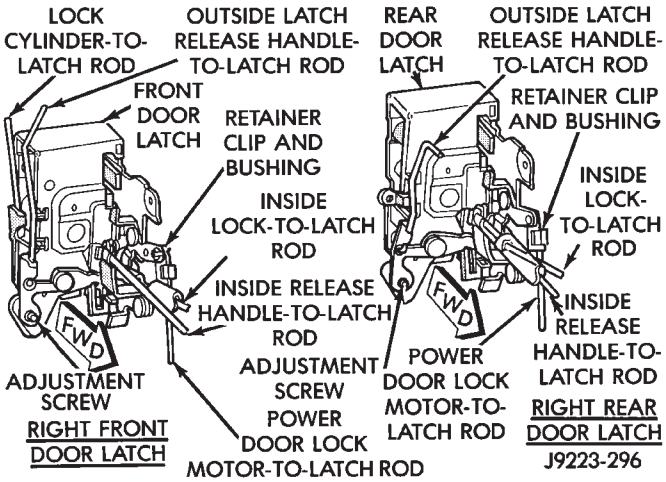

Fig. 22 Door Latches

(7) Remove the door latch from the door face.

(8) For vehicles equipped with power door locks, remove the lock motor rivets. Remove the motor and latch as a unit from the door. Detach the rod and motor from the latch (Fig. 23).

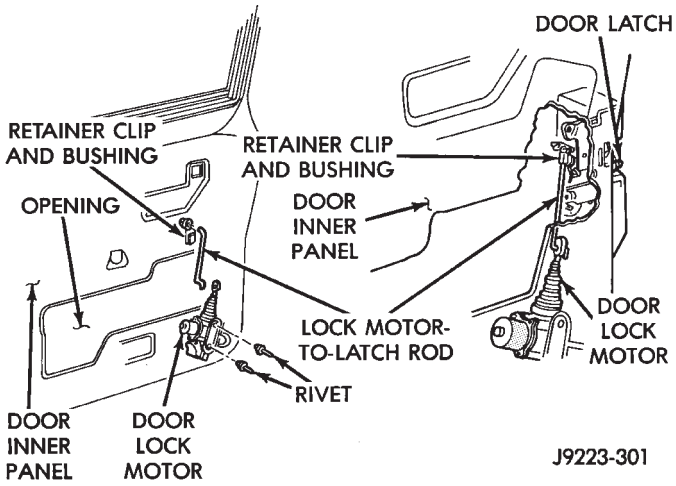

Fig. 23 Door Lock Motor

INSTALLATION

(1) If necessary, install a replacement latch striker (Fig. 24).

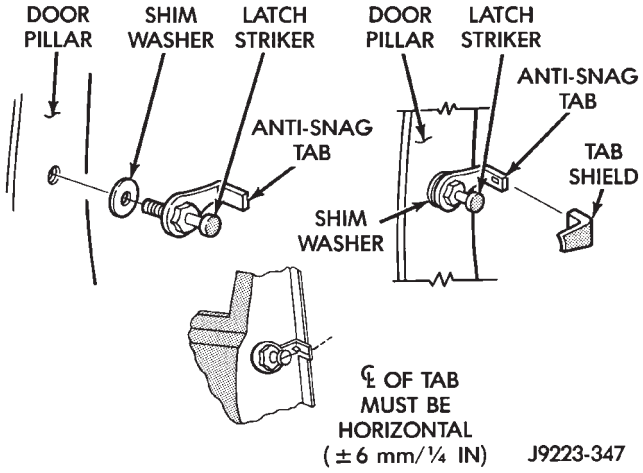

Fig. 24 Door Latch Striker Removal/Installation

(2) For vehicles equipped with power door locks, attach the rod and lock motor to the latch. Attach the lock motor to the door panel with either rivets or with bolts and nuts (Fig. 23).

(3) Install the door latch at the door face and connect all the rods to the latch.

(4) Install the latch screws. Tighten the screws to 9 N·m (77 in-lbs) torque.

(5) Install the external handle.

(6) Install the latch-to-door handle rod.

(7) Install the key lock cylinder and retainer clip.

(8) Install the door waterdam and trim panel.

(9) Install the door access plug.

(10) Adjust the door latch as described in DOOR LATCH ADJUSTMENT.

DOOR INSIDE LATCH RELEASE AND LOCK RODS—XJ

REMOVAL

(1) Remove the door inside latch release handle screws (Fig. 1 and 2).

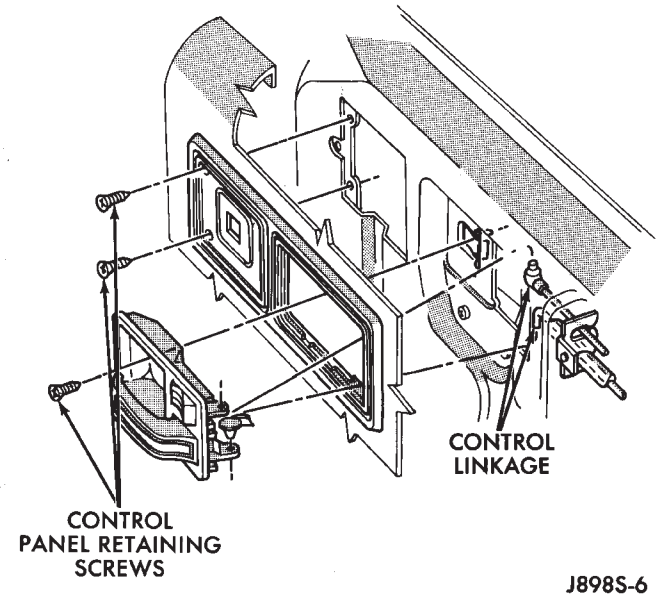

Fig. 1 Front Door Inside Latch Release Handle

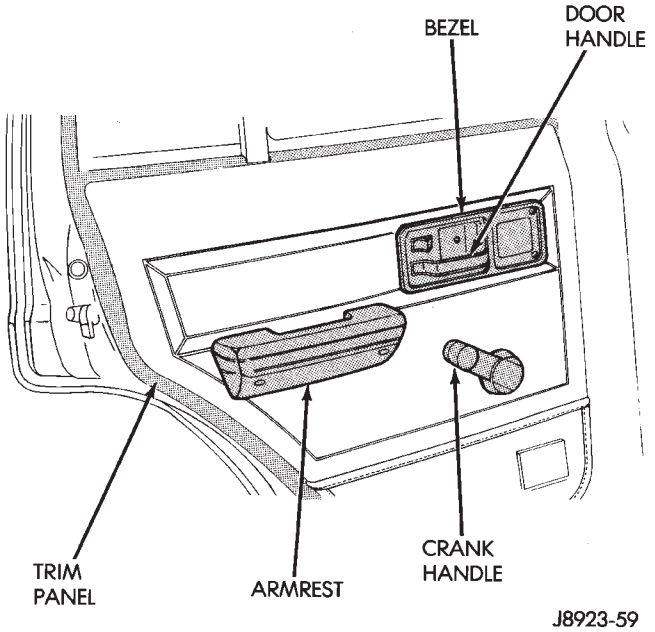

Fig. 2 Rear Door Inside Latch Release Handle

(2) Move the door release handle outward and disconnect the handle-to-latch rods (Fig. 3). For vehicles equipped with power door locks/windows, also disconnect the wire harness connector (Fig. 4).

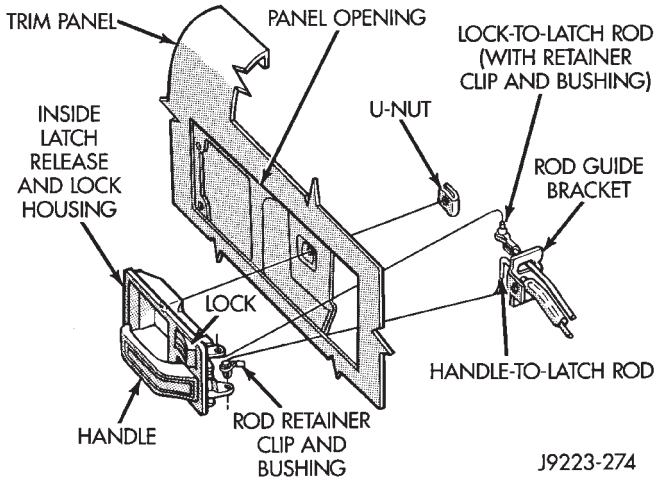

Fig. 3 Door Inside Latch Release Rods

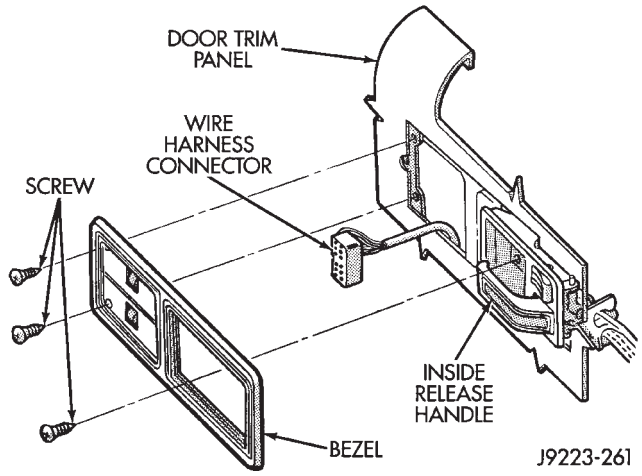

Fig. 4 Power Switch Wire Harness Connector 16

(3) Remove the door trim panel and waterdam.

(4) Drill-out the rivet heads and remove the rod guide bracket rivets from the door inner panel (Fig. 5 and 6).

(5) Remove the rod guide brackets and rods from the door.

INSTALLATION

(1) Position the rod guide brackets and rods in the door.

(2) Install rod the guide bracket rivets in the door inner panel (Fig. 7).

(3) Install the door trim panel and waterdam.

(4) Adjust the door latch as described in DOOR LATCH ADJUSTMENT.

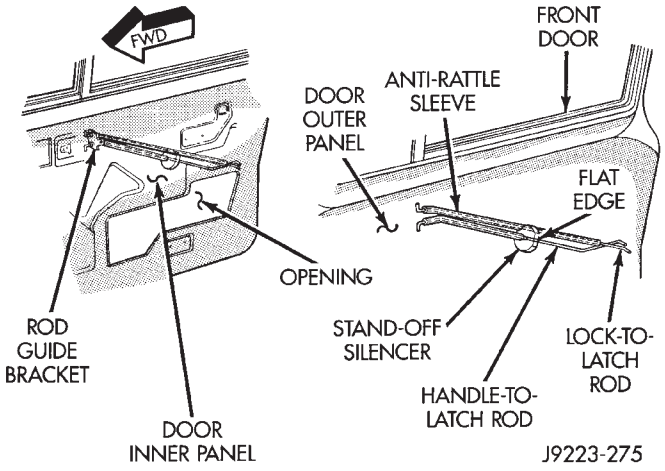

Fig. 5 Front Door Rod Guide Bracket and Rods

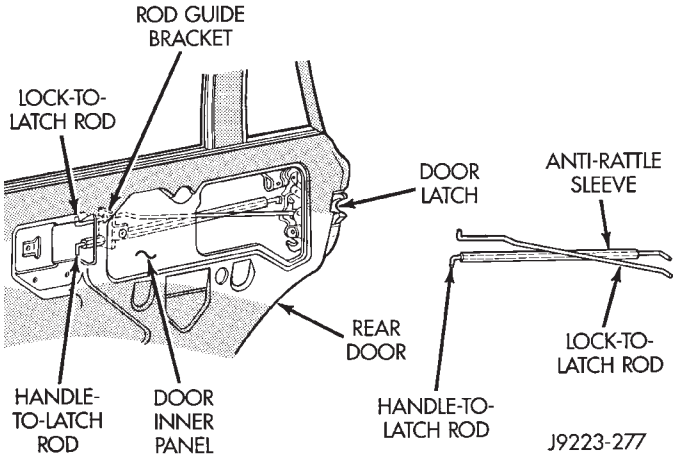

Fig. 6 Rear Door Rod Guide Bracket and Rods

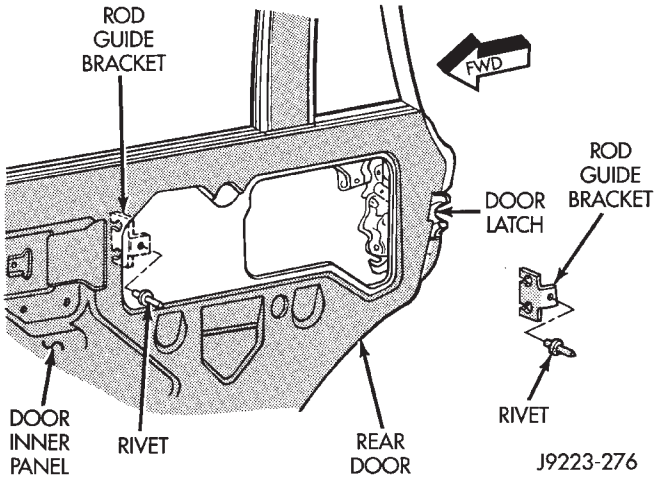

Fig. 7 Rod Guide Bracket Installation

DOOR HINGE/HINGE PIN REPLACEMENT—XJ

REMOVAL

(1) Remove the door restraint (check) retaining pin (Fig. 8) with a punch.

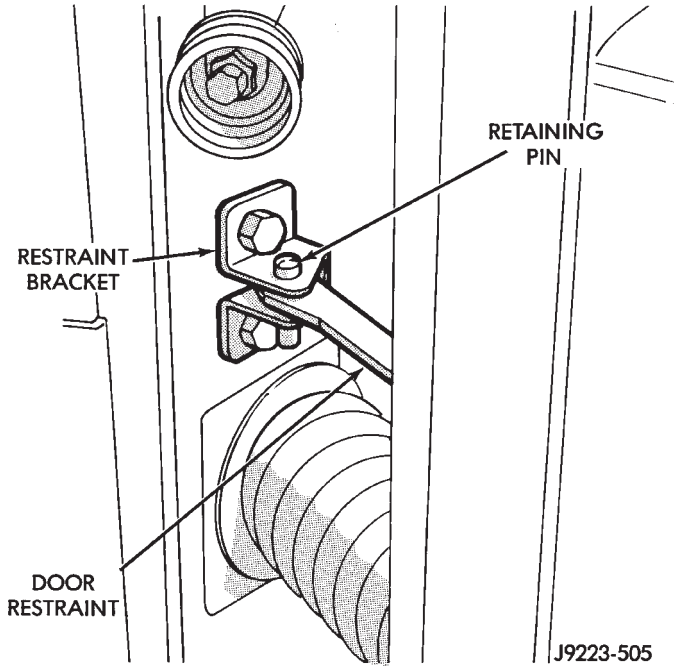

Fig. 8 Door Restraint (Check) Retaining Pin

(2) Front door: open the door wide for access and remove the door hinge pin and bushing with a punch.

(3) Rear door: with the door closed, remove the door hinge pin and bushing with a punch (Fig. 9).

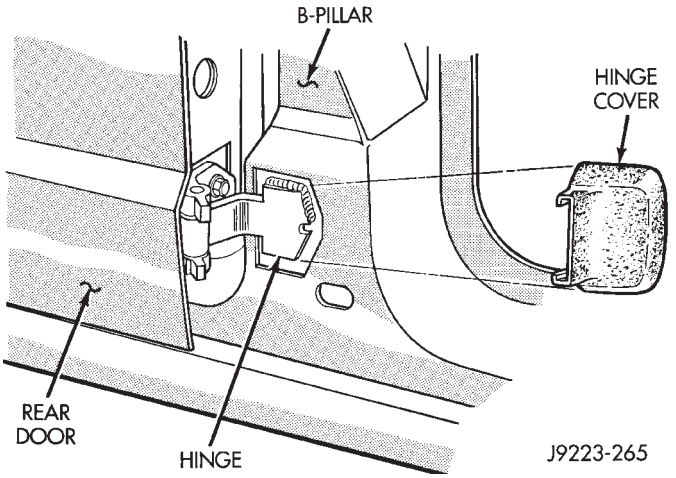

Fig. 9 Rear Door Hinge

(4) Remove the door hinge bolts, plates and shims (Fig. 10).

(5) Retain the door hinge plates and shims for correct installation.

(6) Separate the hinge halves.

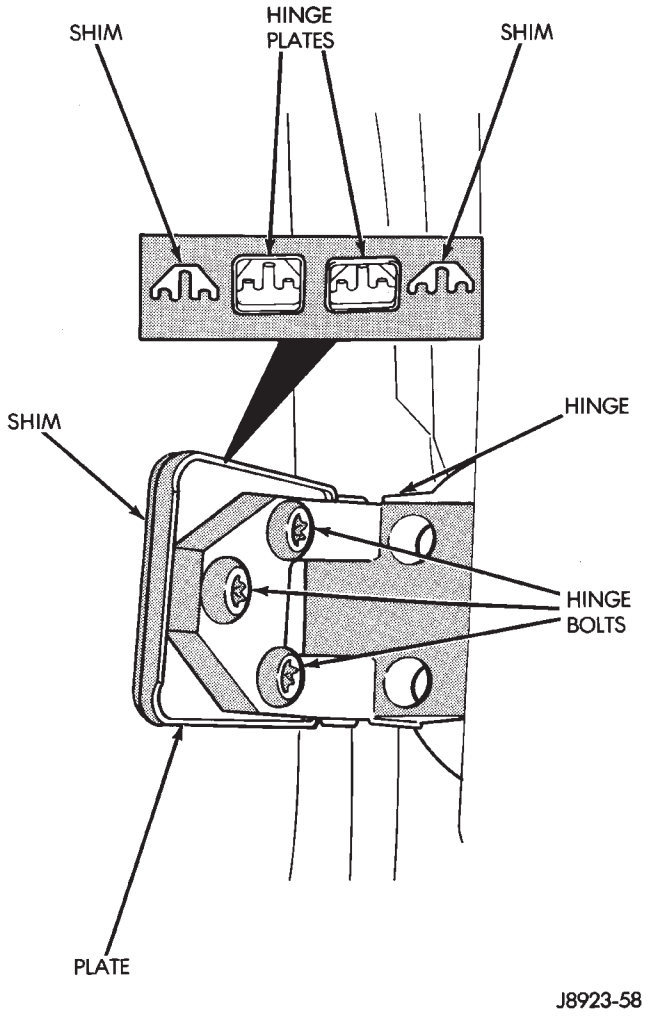

Fig. 10 Door Hinges, Bolts, Plates and Shims

INSTALLATION

(1) Position the hinge plates, shims and replacement hinge-half on the door face.

(2) Align the door hinges, plates and shims with bolt holes and install hinge bolts (Fig. 10).

(3) Insert a bushing in both body hinge halves from the bottom (Fig. 11).

(4) Allow the bushing material to stick out of the top of the hinge. Use the round end of a ball-peen hammer, lightly tap the bushing material to begin to roll it outward (Fig. 12).

(5) When the entire edge of the bushing is rolled outward, turn the hammer over and lightly tap the bushing material to form a flat head (Fig. 13). The head must be flat without overlapping or distorting the bushing material.

(6) Slide the door half of the upper and lower hinges onto the body half of both hinges and align the hinge pin holes.

(7) Carefully start the hinge pins through the hinges (they will fit snugly) and then use a two pound hammer, carefully seat both hinge pins (Fig.

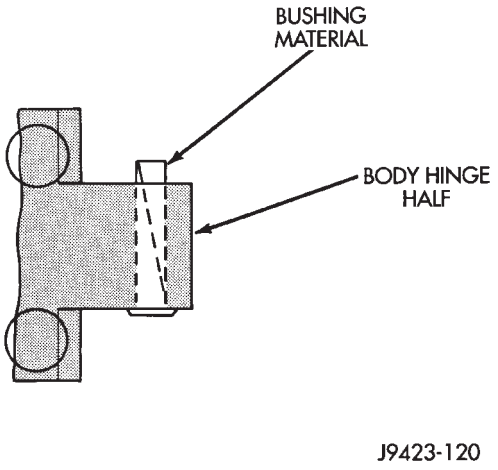

Fig 11 Install Bushing In Hinge

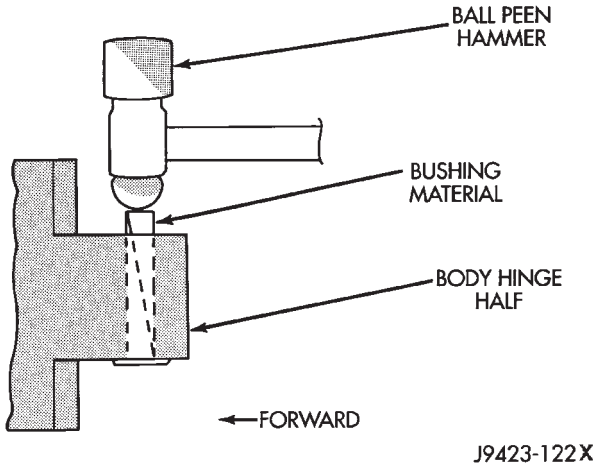

Fig. 12 Begin To Roll Bushing Material Outward

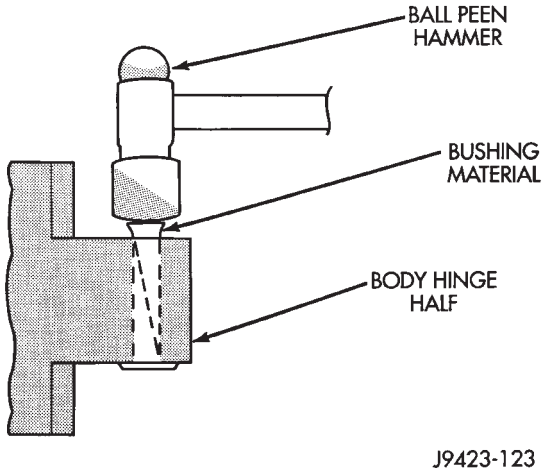

Fig. 13 Forming A Head On The Bushing

14). Be careful not to bend the hinge when driving the hinge pin, support may be required under the hinge.

(8) Adjust/align latch striker and latch as necessary.

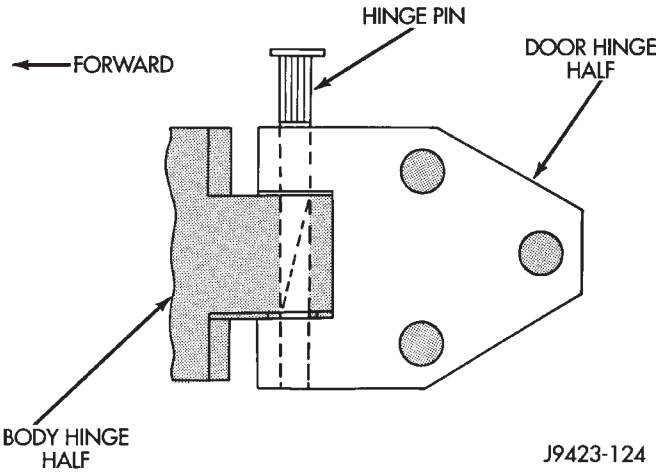

Fig. 14 Installing The Hinge Pin

(9) Install the door restraint (check) retaining pin with a punch.

FRONT DOOR SPACER BLOCKS—TWO-DOOR VEHICLES

REMOVAL

(1) Upper spacer block: drill-out the rivet heads and remove them from the reinforcement plate (Fig. 1).

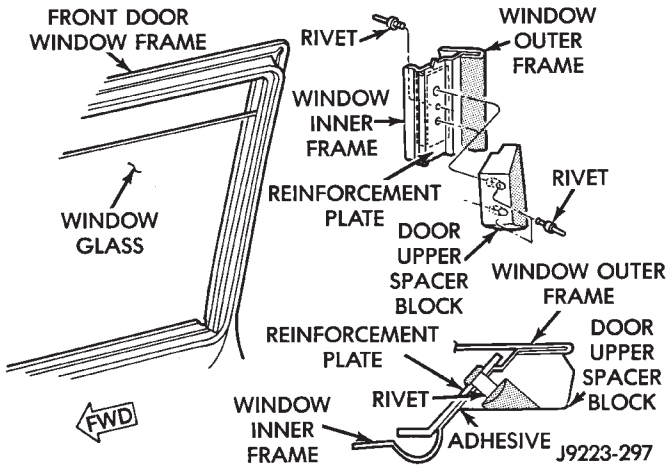

Fig. 1 Front Door Upper Spacer Block—Two-Door Vehicles

(2) Lower spacer block: remove the screws from the door face (Fig. 2).

(3) As applicable, remove the spacer block from the door window frame or door face.

INSTALLATION

(1) As applicable, position the spacer block on the door window frame or door face.

(2) Upper spacer block: Install the replacement rivets in the spacer block and reinforcement plate.

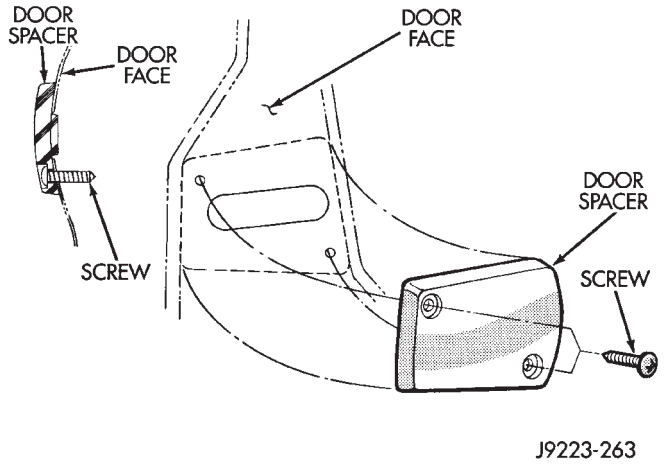

Fig. 2 Front Door Lower Spacer Block—Two-Door Vehicles

(3) Lower spacer block: install the screws in the door face. Tighten the screws to 1 N·m (11 in-lbs) torque.

DOOR EDGE GUARD/EDGE PROTECTOR STRIP—XJ

REPLACEMENT

(1) Pull outward and remove the door edge guard strip from the door edge (Fig. 3).

(2) Position the door edge guard strip on the door edge.

(3) Force the door edge guard strip inward until it is seated on the door edge.

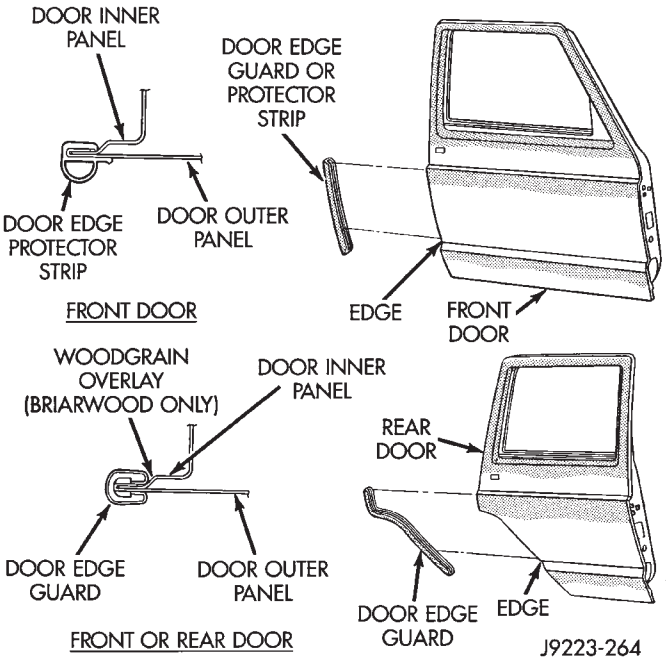

Fig. 3 Door Edge Guard/Protector Strip

DOOR WINDOW EXTERIOR MOLDINGS—XJ

REMOVAL

(1) When removing the front or rear door window exterior molding, open the window completely (Fig. 4 and 5).

(2) Pry and pull the molding sections from the door panel flange and clips.

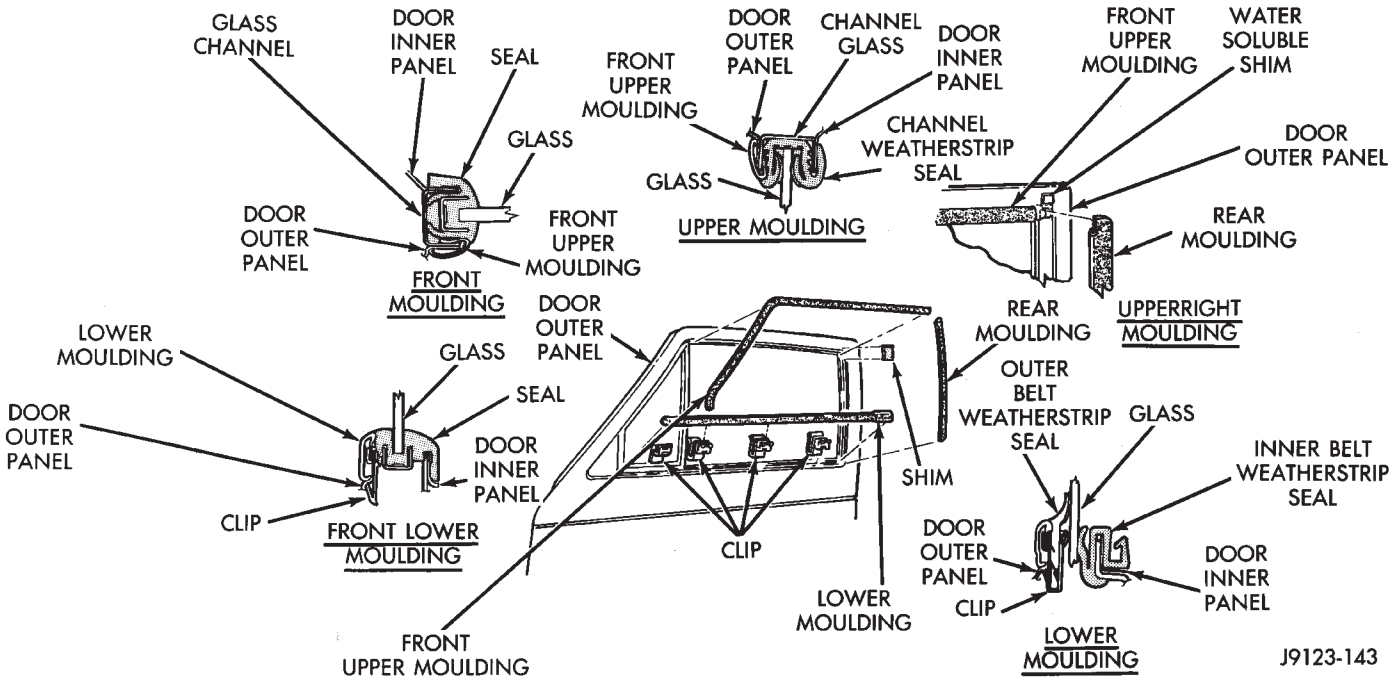

Fig. 4 Front Door Window Exterior Molding

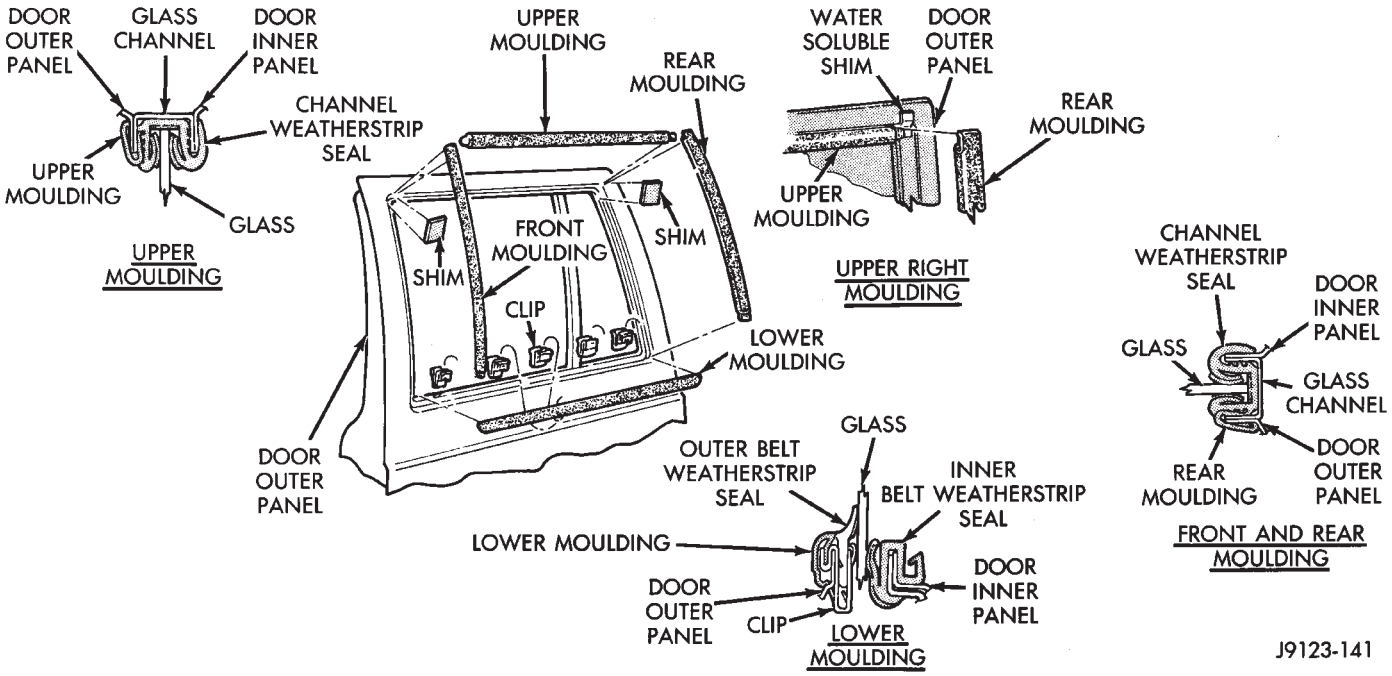

Fig. 5 Rear Door Window Exterior Molding

INSTALLATION

(1) When installing window moldings, start at the forward end of the upper molding.

(2) Force the molding onto the door panel and continue rearward until it is completely seated on the flange.

(3) Mate the rear molding with the upper molding and force the molding edge inward.

(4) Continue pressing and moving downward to complete the installation.

(5) Position the lower molding on the clips and force it downward.

DOOR WINDOW GLASS AND DOOR OPENING WEATHERSTRIP SEALS—XJ

REMOVAL

When removing the front or rear door window glass weatherstrip seals, open the window.

The window weatherstrip seals (Fig. 6 and 7) can be removed by hand or with the aid of a small putty knife (or similar tool).

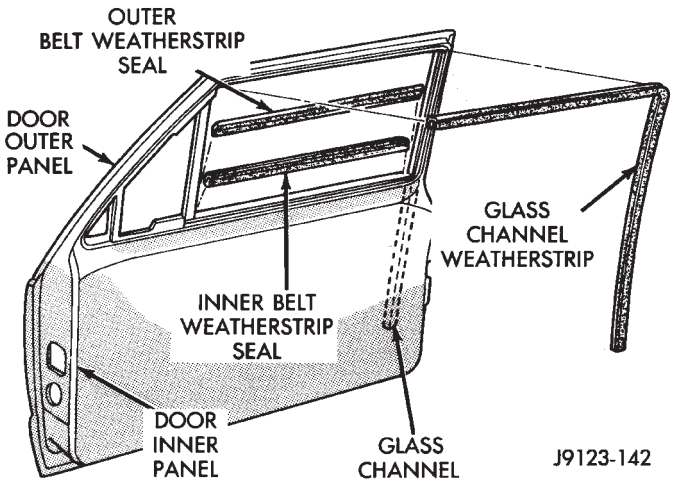

Fig. 6 Front Door Window Glass Weatherstrip Seals

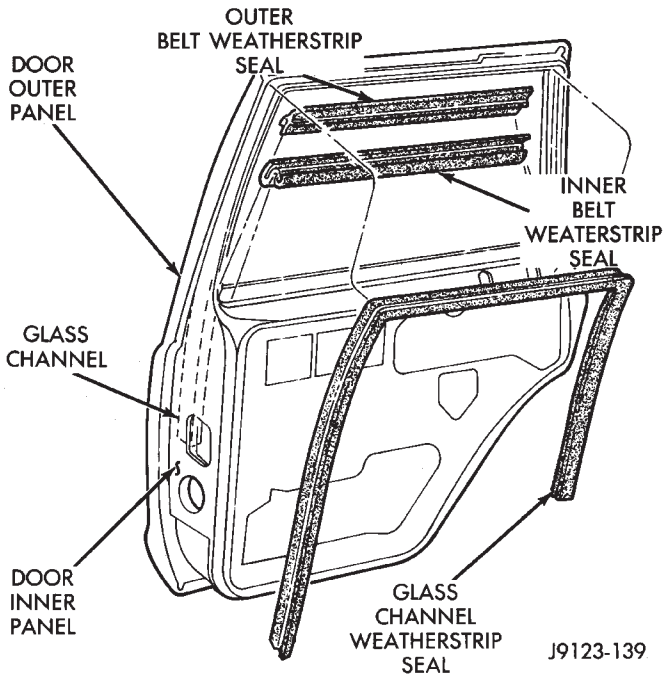

Fig. 7 Rear Door Window Glass Weatherstrip Seals

The door opening weatherstrip seal is attached to the periphery of the door opening in the body. The retaining push-studs can be removed with an appropriate pry tool. The front door secondary seal is attached to the A-pillar with plastic blind rivets (Fig. 8).

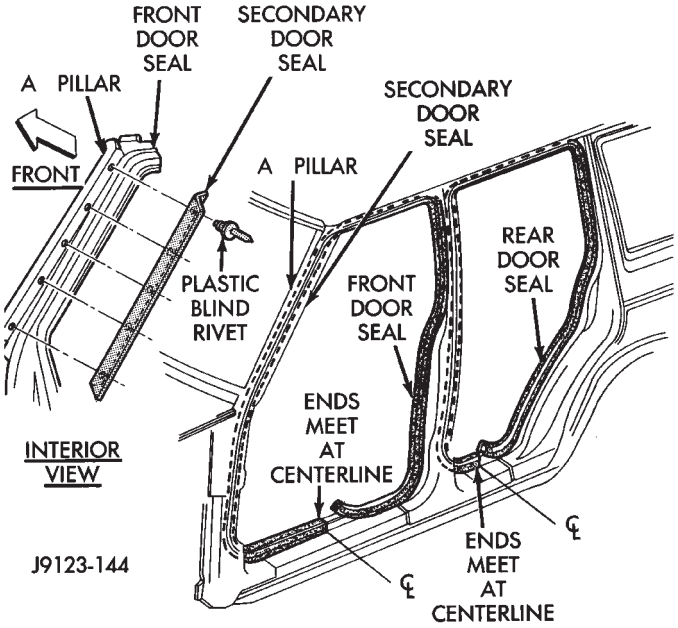

Fig. 8 Door Opening Weatherstrip Seals

The door-to-rocker panel seals are attached to the door inner panels with rivets (Fig. 9). The rivets can be removed with an appropriate pry tool.

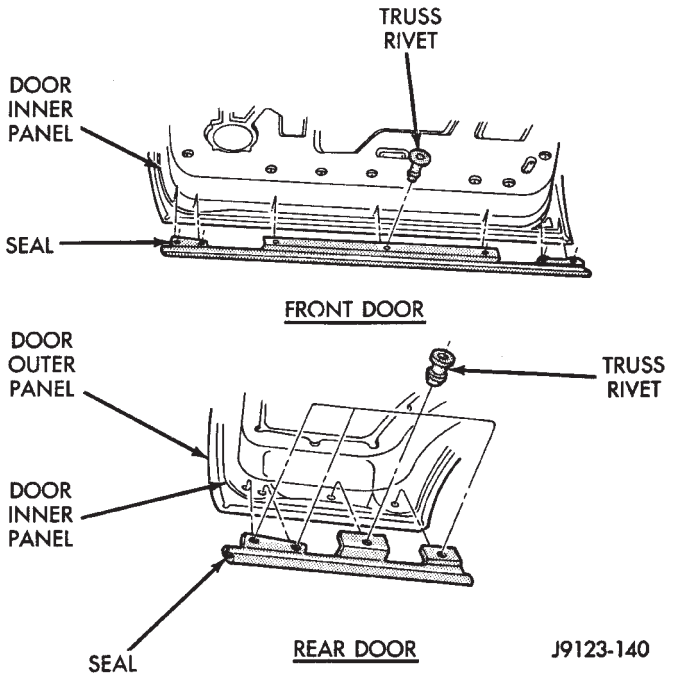

Fig. 9 Door-To-Rocker Panel Seals

WINDOW GLASS WEATHERSTRIP SEAL INSTALLATION

When installing front or rear door window glass weatherstrip seals, open the window completely.

(1) To install a front door window glass channel weatherstrip seal, start at the upper, rear corner (Fig. 10).

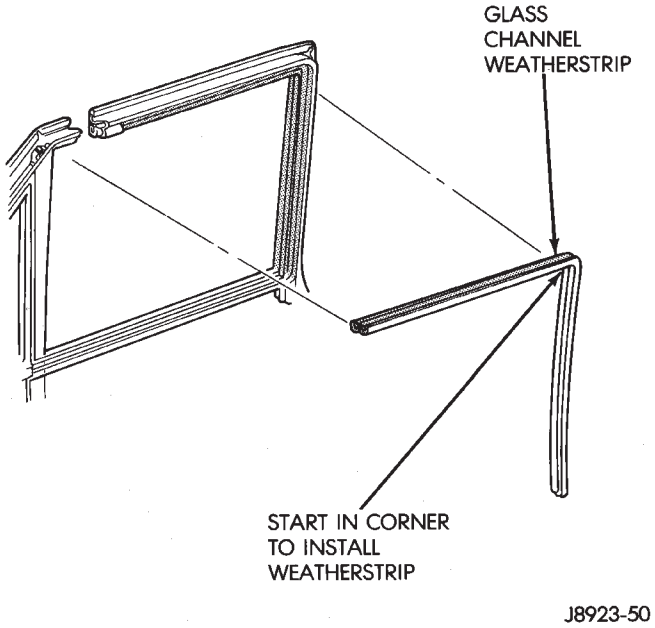

Fig. 10 Front Door Window Glass Channel Weatherstrip Seal

(2) To install a rear door window glass channel weatherstrip seal, start at the upper, front corner (Fig. 11).

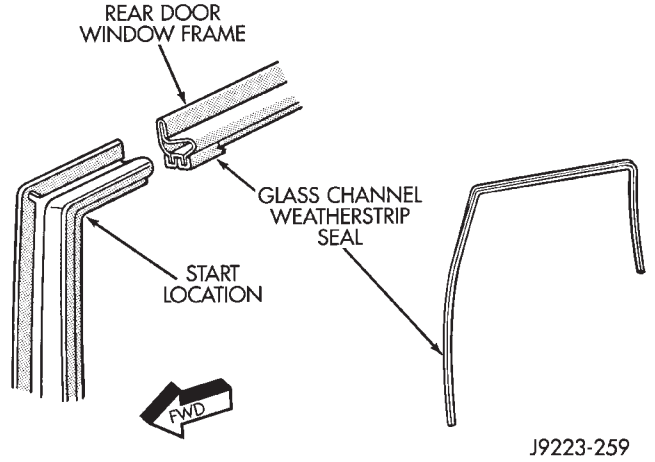

Fig. 11 Rear Door Window Glass Channel Weatherstrip Seal

(3) A small amount of adhesive can be used to hold the weatherstrip seal in-place, if necessary.

(4) As applicable, move forward or rearward and downward evenly until the weatherstrip seal is fully seated in the channel.

(5) Position the belt weatherstrip seals at the window edge (Fig. 12, 13 and 14) and force them downward until seated on the flange.

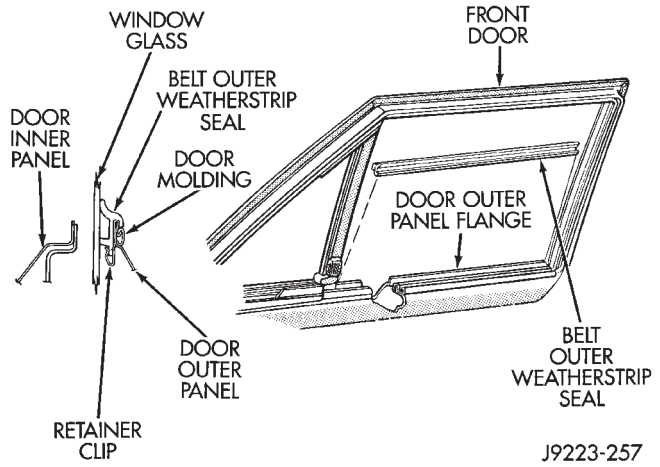

Fig. 12 Front Door Belt Outer Weatherstrip Seal

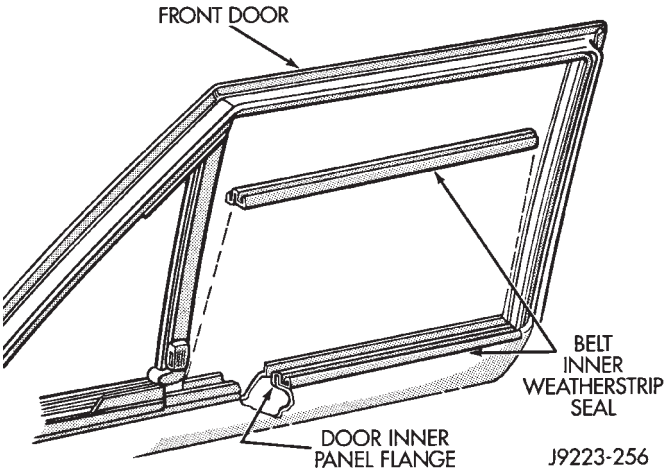

Fig. 13 Front Door Belt Inner Weatherstrip Seal

DOOR OPENING WEATHERSTRIP SEAL INSTALLATION

The weatherstrip seal is attached to the flange around the perimeter of the door opening with adhesive and plastic push-studs.

(1) When installing a door opening weatherstrip seal, start at the door sill center line.

(2) Use adhesive along with the push-studs to aid in retaining a weatherstrip seal.

(3) Move upward and around the perimeter of the door opening and seat the weatherstrip seal on flange (Fig. 15).

(4) Install the front door secondary seal with plastic blind rivets.

DOOR-TO-ROCKER PANEL SEAL INSTALLATION

(1) Position the seal on the door inner panel with the holes aligned.

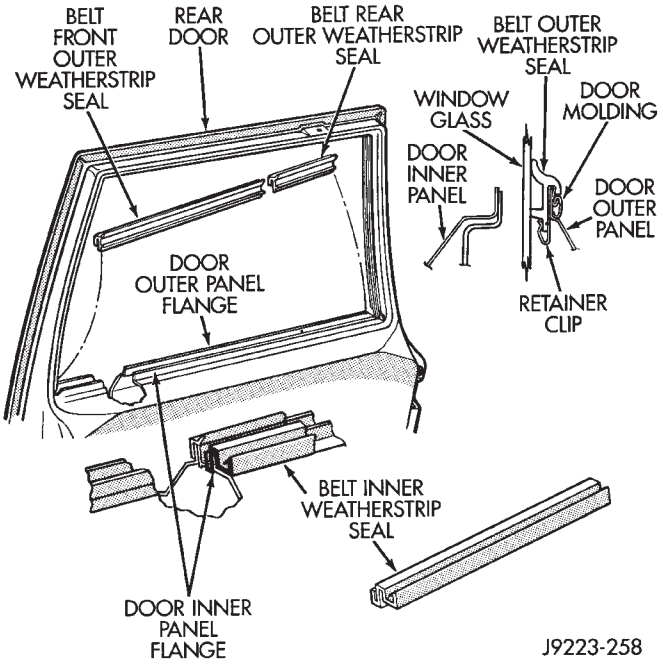

Fig. 14 Rear Door Belt Outer and Inner Weatherstrip Seal

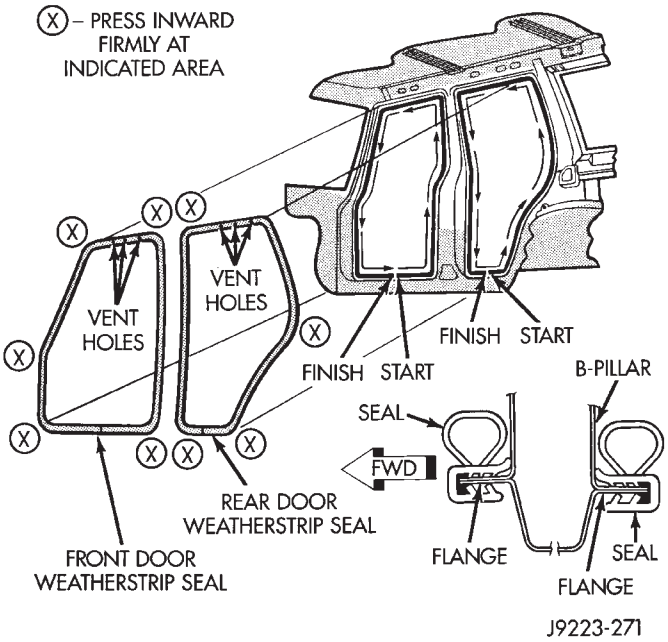

Fig. 15 Door Opening Weatherstrip Seals

(2) Attach the seal to the door inner panel with truss rivets.

LIFTGATE—XJ

The liftgate components are illustrated in Figure 1.

REMOVAL

WARNING: DO NOT DISCONNECT THE SUPPORT ROD CYLINDERS WITH THE LIFTGATE CLOSED. THE SUPPORT ROD PISTONS ARE OPERATED BY HIGH PRESSURE GAS. THIS COULD CAUSE DAMAGE AND/OR PERSONAL INJURY IF THEY ARE REMOVED WHILE PISTONS ARE COMPRESSED.

(1) Open the liftgate.
(2) Remove the liftgate trim panel (Fig. 2).
(3) Remove the retainer clips that secure the support rod cylinders to the ball studs (Fig. 3).
(4) Remove the support rod cylinders from the ball studs.

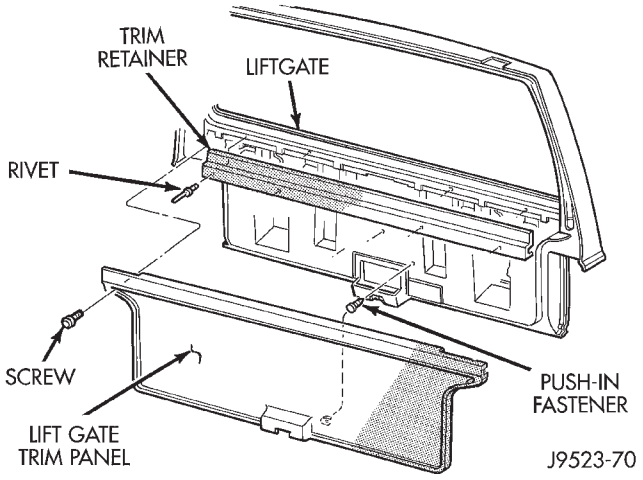

Fig. 2 Liftgate Trim Panel

(5) Remove the screws and the wire harness trim cover from the liftgate header (Fig. 4).

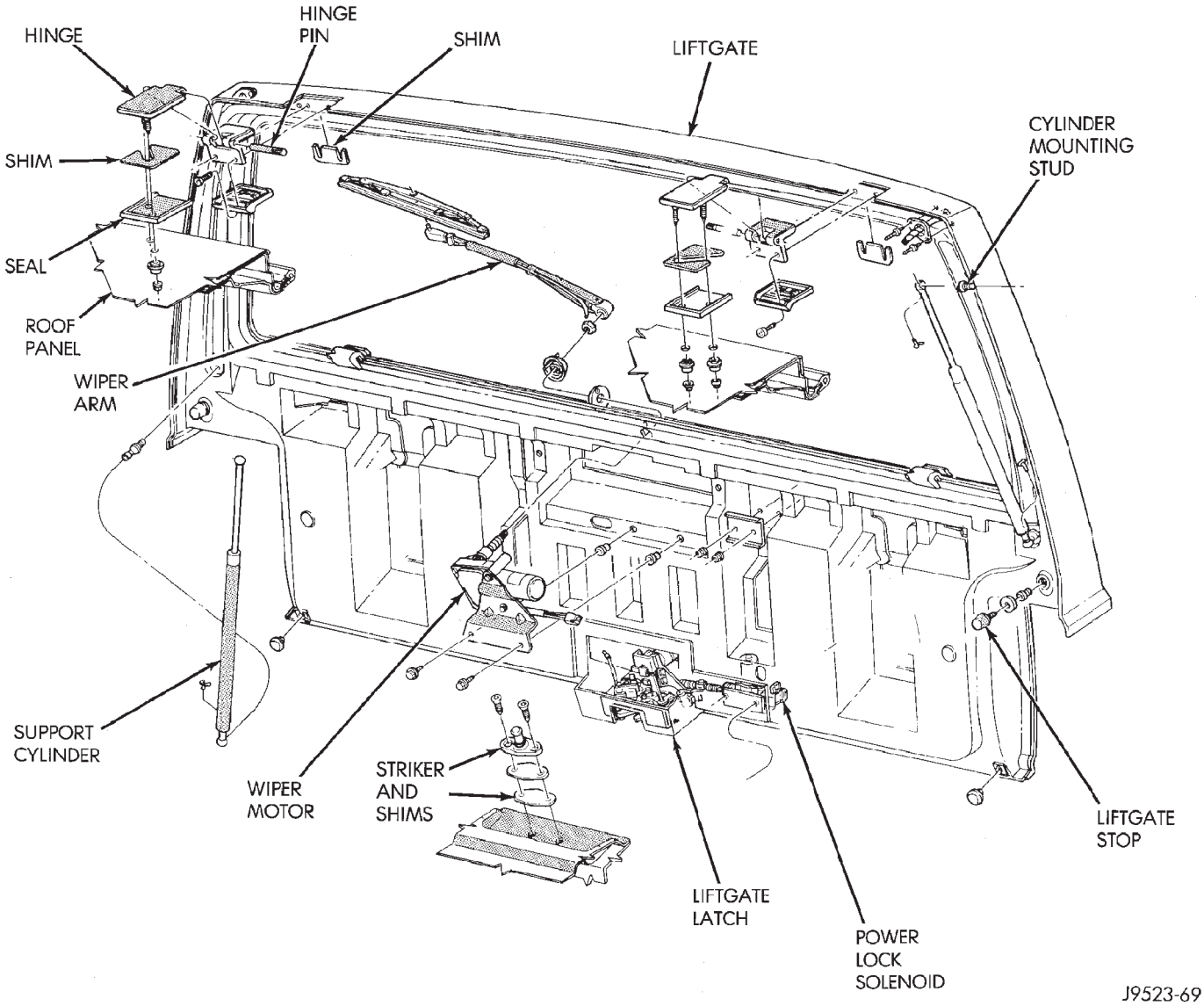

Fig. 1 Liftgate Components

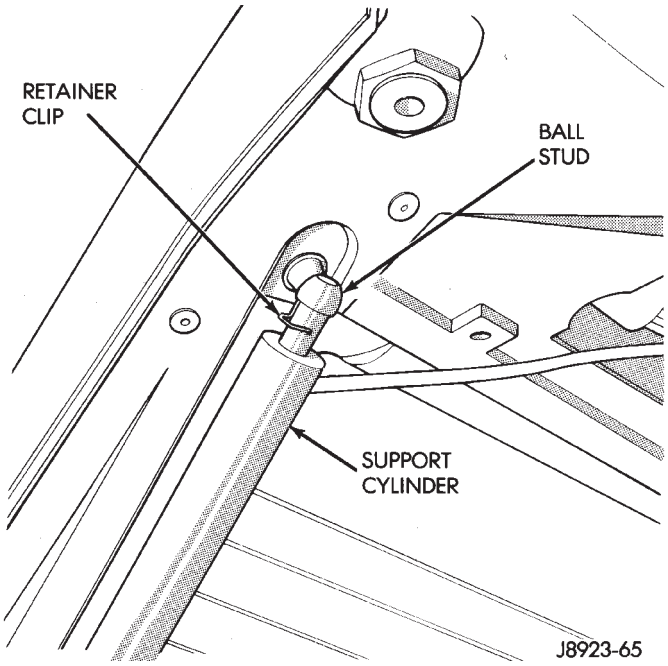

Fig. 3 Support Rod Retainer Clip

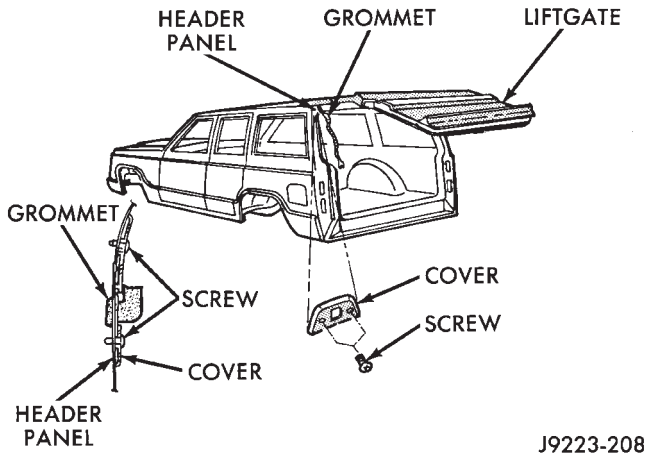

Fig. 4 Liftgate Wire Harness Trim Cover

(6) Disconnect the connectors and remove the wire harness from the liftgate (Fig. 5).

(7) Remove the hinge-to-liftgate screws.

(8) Remove the liftgate from the vehicle.

INSTALLATION

(1) Position and support the liftgate at the opening in the body and install the hinge-to-liftgate screws.

(2) Adjust the liftgate to fit properly in the body opening. Refer to Liftgate Adjustment.

(3) Tighten the hinge-to-liftgate screws to 9 N·m (7 ft-lbs) torque.

(4) Connect the liftgate rod cylinders to the ball studs and install the rod cylinder retainer clips.

(5) Insert and connect the wire harness connectors.

(6) Position the wire harness trim cover on the header and install the screws. Tighten the screws to 1 N·m (11 in-lbs) torque.

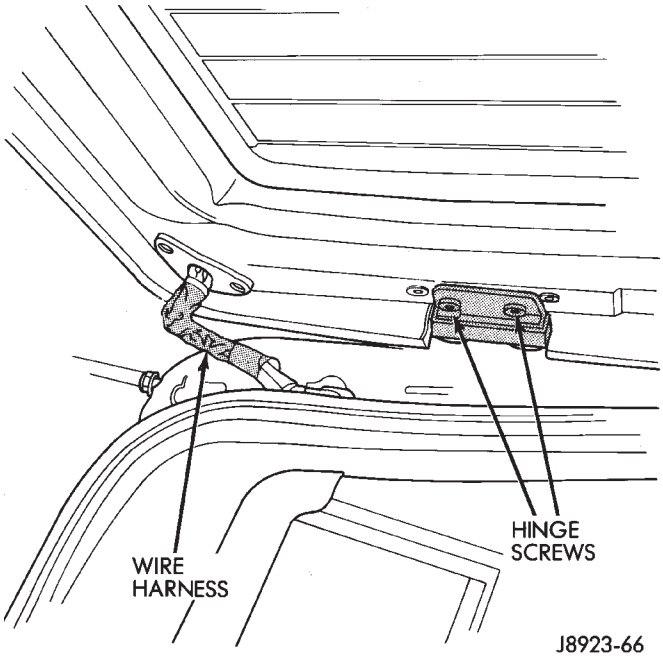

Fig. 5 Liftgate Wire Harness and Hinge Screws

(7) Install the trim panel.

LIFTGATE TRIM PANEL—XJ

REMOVAL

(1) Remove the screws that attach the panel upper sides to the liftgate.

(2) Use a trim stick to detach the panel retainers from the liftgate.

(3) Remove the trim panel from the liftgate.

(4) If necessary, drill-out the rivet heads and remove the trim panel strip from the liftgate (Fig. 6).

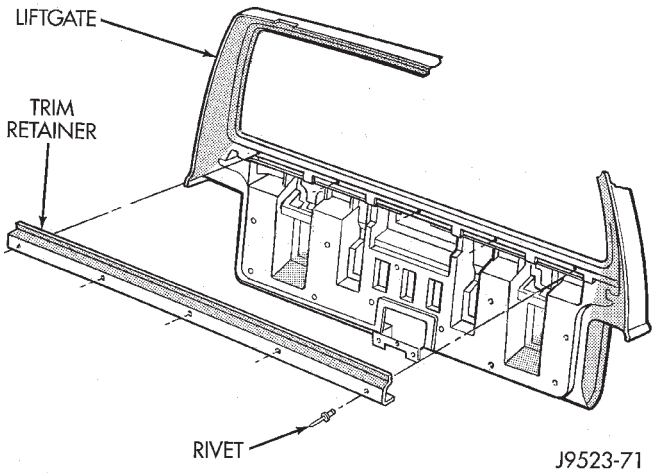

Fig. 6 Liftgate Trim Panel Retainer

INSTALLATION

(1) If removed, install the trim panel retainer strip on the liftgate with replacement rivets.

(2) Position the trim panel on liftgate.

(3) Align the trim panel retainers with the holes in the liftgate inner panel and force the trim panel inward.

(4) Install the screws to attach the panel upper sides to the liftgate.

LIFTGATE HINGE—XJ

REMOVAL

It is not necessary to remove the liftgate to replace one or both hinges.

(1) Remove the liftgate (headliner) upper trim molding (Fig. 7).

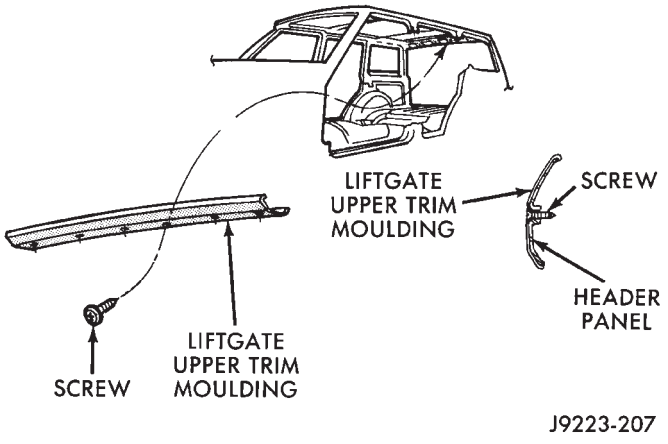

Fig. 7 Liftgate Upper Trim Molding

(2) Remove the hinge-to-roof panel nuts (Fig. 8).

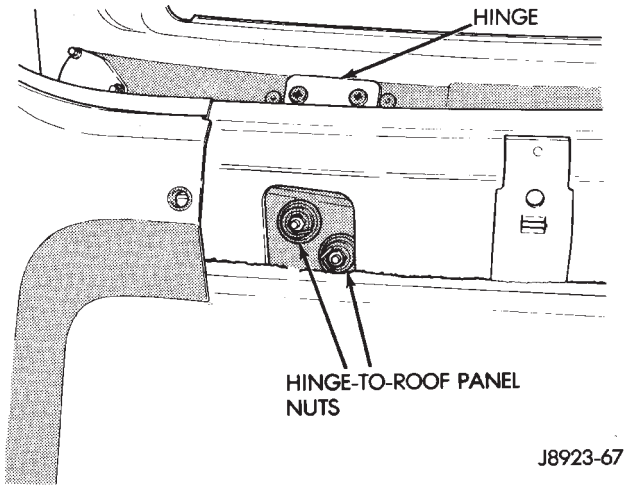

Fig. 8 Liftgate Hinge-To-Roof Panel Nuts

(3) Remove the hinge-to-liftgate screws and remove the hinge from the liftgate (Fig. 9).

INSTALLATION

(1) Position the gaskets, shim and hinge on the liftgate and the roof panel (Fig. 10).

(2) Install and tighten hinge-to-roof panel nuts to 9 N·m (7 ft-lbs) torque.

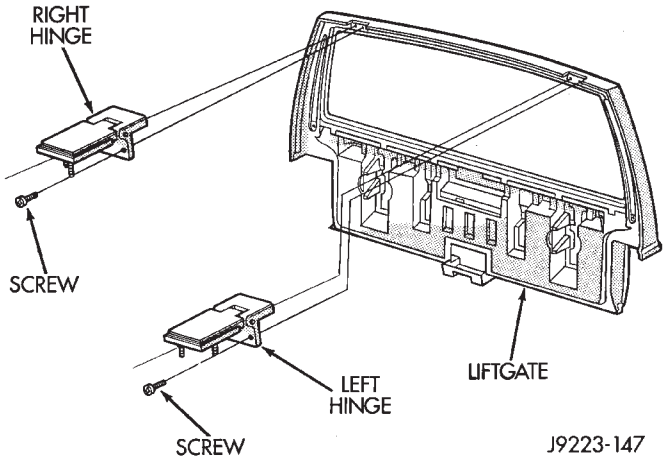

Fig. 9 Liftgate Hinges

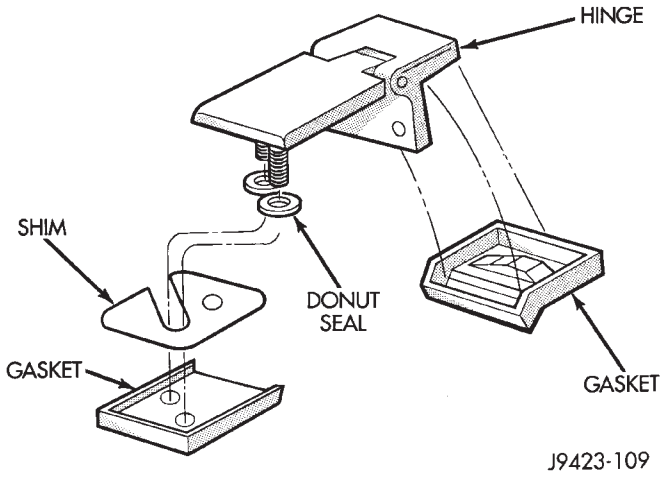

Fig. 10 Liftgate Hinge, Gaskets and Shim

(3) Install the liftgate-to-hinge screws. Tighten screws to 9 N·m (7 ft-lbs) torque.

(4) Install the liftgate (headliner) upper trim molding (Fig. 7).

LIFTGATE LATCH/KEY LOCK CYLINDER/STRIKER—XJ

REMOVAL

(1) Raise the liftgate and remove the latch screws (Fig. 11).

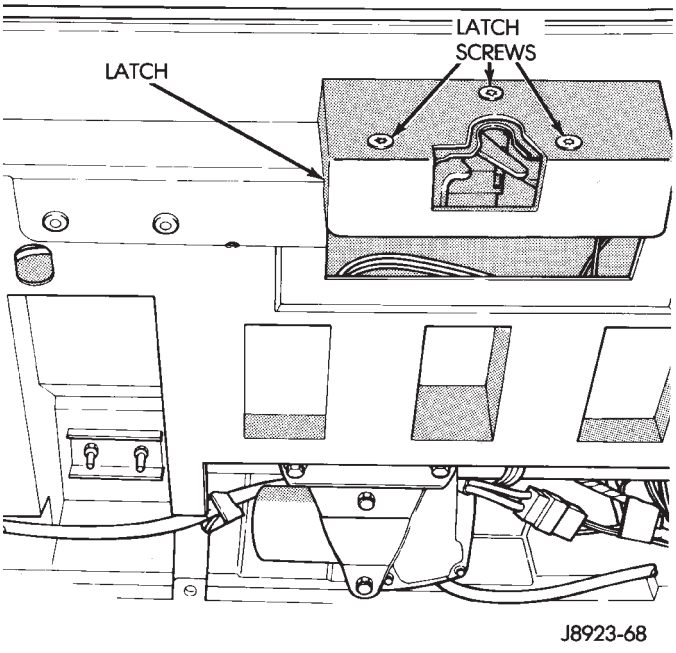

Fig. 11 Liftgate Latch Screws

(2) Disconnect the rod from the latch (Fig. 12).

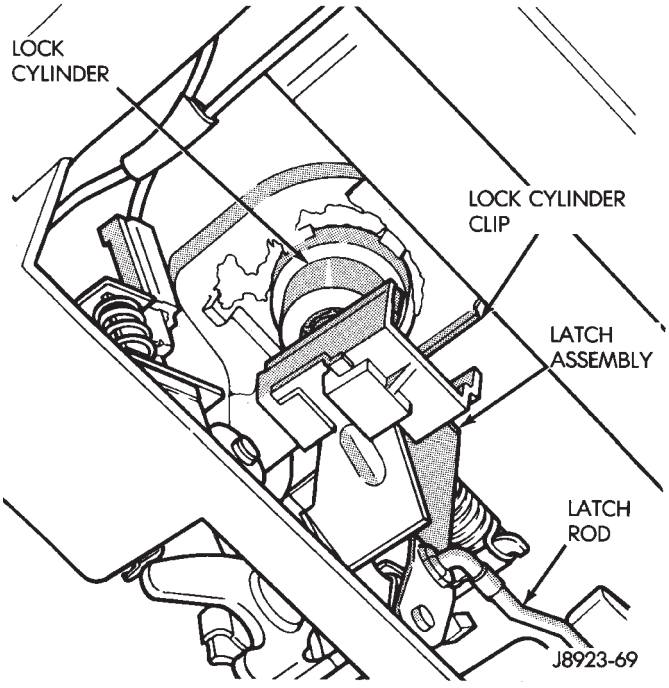

Fig. 12 Latch and Key Lock Cylinder

(3) Remove the latch from the liftgate (Fig. 13).

(4) Drill-out the rivet heads and remove the lock solenoid from liftgate (Fig. 14).

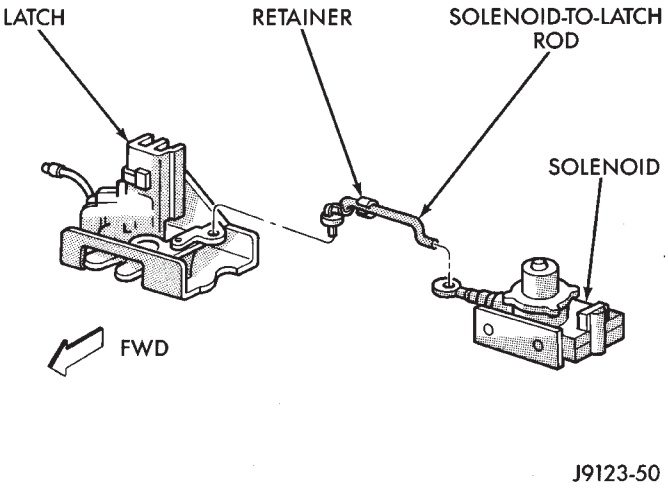

Fig. 13 Liftgate Latch and Solenoid

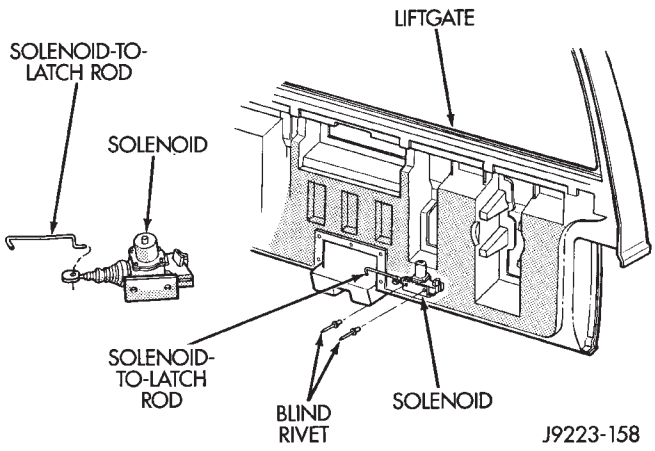

Fig. 14 Liftgate Lock Solenoid

(5) Remove the lock cylinder retainer clip (Fig. 15).

(6) Remove the key lock cylinder.

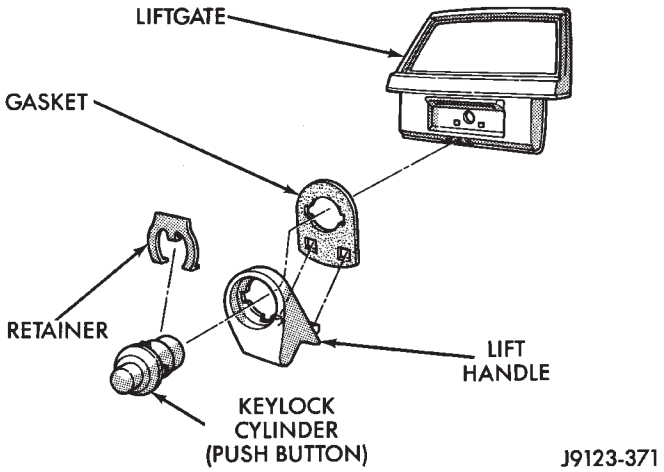

Fig. 15 Liftgate Key Lock Cylinder

(7) Remove the latch striker screws from the scuff plate and cross sill (Fig. 16)

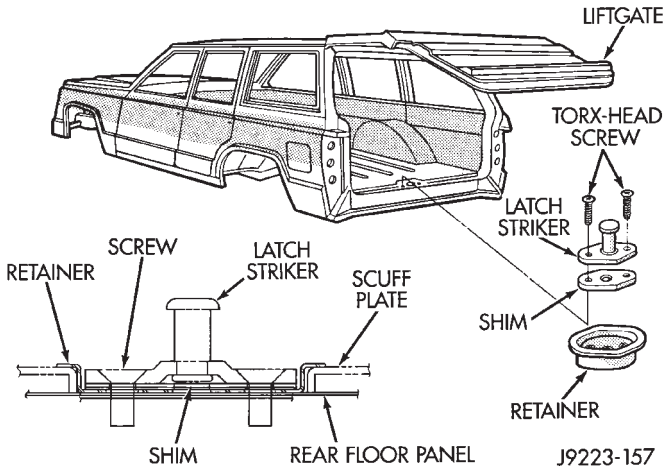

Fig. 16 Liftgate Latch Striker

(8) Remove the striker and shim from the retainer.

INSTALLATION

(1) Install the key lock cylinder. Secure the lock cylinder with the retainer clip (Fig. 17).

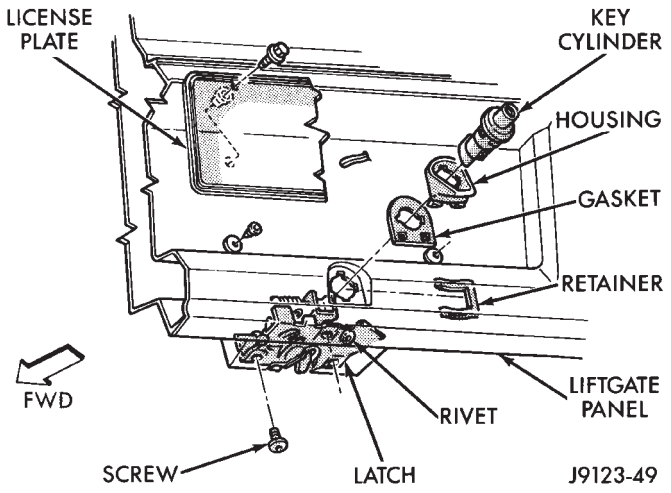

Fig. 17 Liftgate Key Lock Cylinder and Latch

(2) Position the latch in the liftgate.

(3) Connect the latch rod.

(4) Install and tighten the latch screws to 12 N·m (110 in-lbs) torque.

(5) Install the striker retainer, shim, striker and screws in the scuff plate cross sill.

LIFTGATE SUPPORT ROD CYLINDER—XJ

REMOVAL

WARNING: DO NOT REMOVE A SUPPORT ROD CYLINDER WITH THE LIFTGATE CLOSED. EACH SUPPORT ROD PISTON IS OPERATED BY HIGH PRESSURE GAS. IT CAN CAUSE DAMAGE AND/OR PERSONAL INJURY IF IT IS REMOVED WITH THE PISTON COMPRESSED. DO NOT ATTEMPT TO DISASSEMBLE OR REPAIR A SUPPORT ROD CYLINDER .

(1) Open the liftgate.

(2) Support the liftgate in the open position.

(3) Remove the clips that attach the support rod and cylinder to the ball studs (Fig. 1).

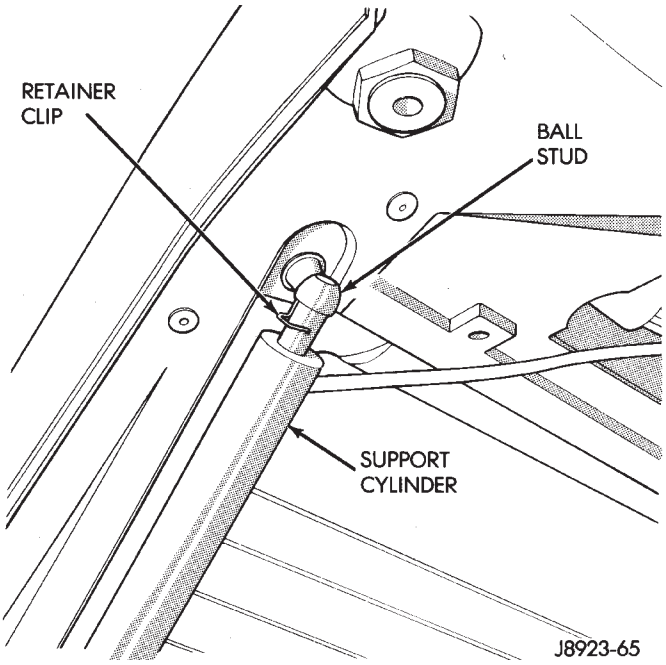

Fig. 1 Support Rod Retainer Clip

(4) Disconnect the support rod and cylinder from the ball studs and remove the cylinder from vehicle (Fig. 2).

(5) De-pressurize the original rod cylinder before disposal. Refer to the procedure below.

INSTALLATION

(1) Connect the replacement support rod and cylinder to the ball studs.

(2) Secure the support rod and cylinder to the ball studs with the retainer clips.

(3) Remove the support from the liftgate and test the operation of the support rod.

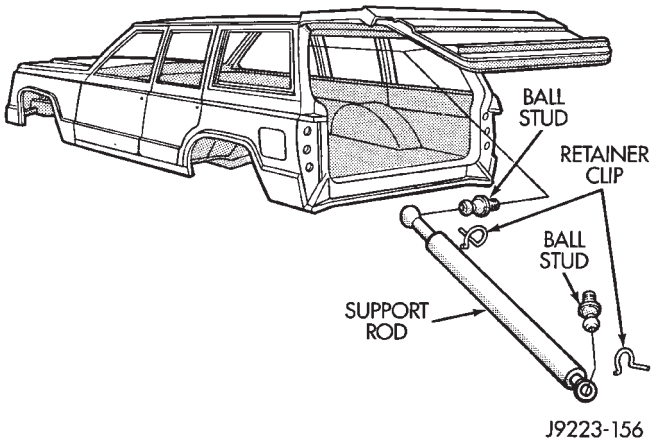

Fig. 2 Support Rod, Retainer Clips and Ball Studs

LIFTGATE SUPPORT ROD CYLINDER DISPOSAL—XJ

WARNING: SAFETY GOGGLES MUST BE WORN DURING THE DISPOSAL PROCEDURE. THE HIGH PRESSURE GAS CHARGE IN THE SUPPORT ROD CYLINDERS WILL BE RELEASED DURING THE PROCEDURE .

(1) Remove the support rod cylinder(s) from the liftgate.

(2) Position the support rod cylinder horizontally in a vise and clamp the cylinder securely.

(3) Wrap the cylinder with 4-5 layers of shop towels.

(4) Measure 1 and 1/2 inches inward from the end of the cylinder. Mark this location on the towels with chalk. The cylinder will be punctured at this location to release the gas charge.

(5) Use a punch and hammer to puncture cylinder. Force the punch through towels and into the cylinder with a hammer. Continue striking the punch until the gas begins to escape **but do not remove the punch.**

(6) Hold the towels and punch in position until all the gas has escaped. Complete de-pressurization will require about 4 to 10 seconds. After all the gas has escaped, slowly remove the punch.

(7) Hold a towel over the hole in cylinder and press the support rod piston all the way into the cylinder to purge remaining oil.

(8) Remove the support rod cylinder from the vise and discard it.

(9) If both support rod cylinders are being replaced, repeat this procedure for the remaining cylinder.

LIFTGATE SUPPORT ROD BALL STUD REPLACEMENT—XJ

REMOVAL

(1) Open the liftgate.

(2) Support the liftgate in the open position.

(3) Remove the retainer clip that attaches the support rod and cylinder to the ball stud.

(4) Disconnect the support rod from the ball stud.

(5) Remove the ball stud from the liftgate with a T-30 Torx-head socket wrench (Fig. 3).

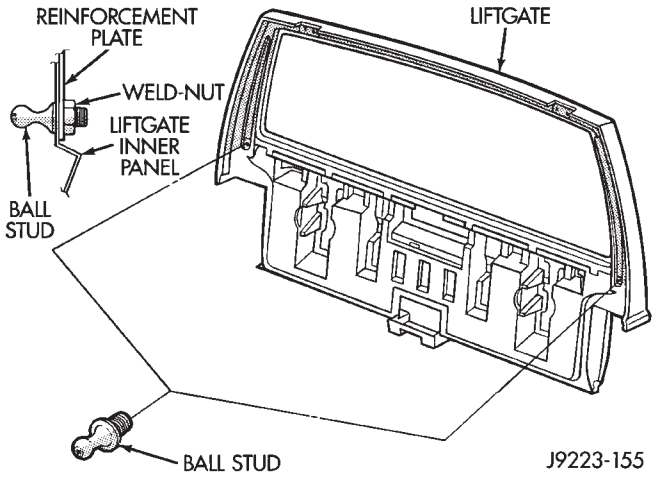

Fig. 3 Support Rod Ball Studs

INSTALLATION

(1) Install the replacement ball stud in the liftgate with a T-30 Torx-head socket wrench. Tighten the ball stud to 7 N·m (62 in-lbs) torque.

(2) Connect the support rod to the ball stud.

(3) Secure the support rod to the ball stud with the clip.

(4) Remove the support from the liftgate and test the operation of support rod.

LIFTGATE ADJUSTMENT—XJ

SERVICE INFORMATION

The position of the liftgate can be adjusted upward or downward, and inward or outward by the use of hinge shims. The liftgate stop bumpers must also be adjusted if liftgate hinges are adjusted. The inward/outward position of each stop bumper is adjusted by the use of shims (Fig. 4).

ADJUSTMENT PROCEDURE

(1) To move the position of the liftgate inward or outward, remove or add shims between the hinge-halves and liftgate.

(2) To move the position of the liftgate upward or downward, remove or add shims between the hinge-halves and roof panel.

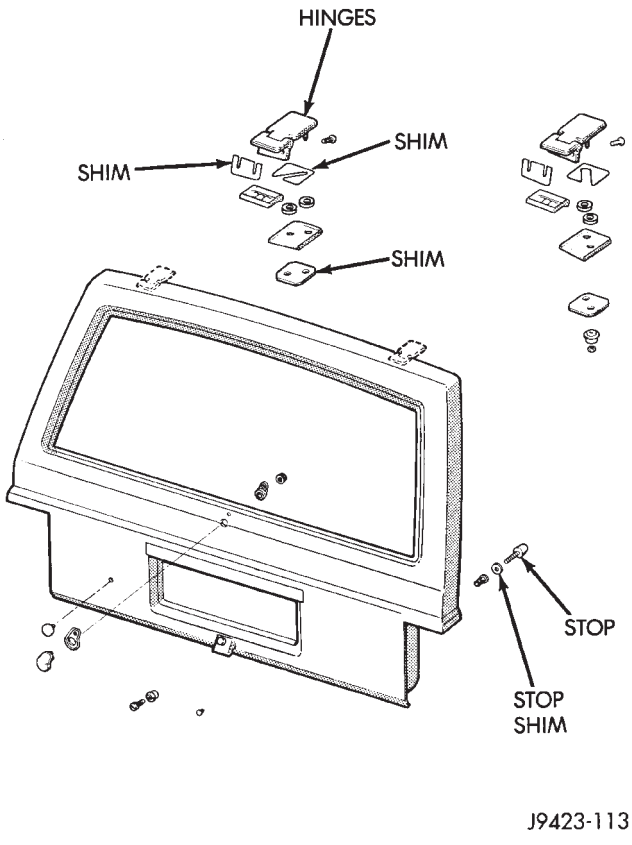

Fig. 4 Liftgate Adjustment Shims

(3) To move the position of liftgate stop bumpers inward or outward, remove or add shims between the stop bumper screws and anchors (Fig. 5).

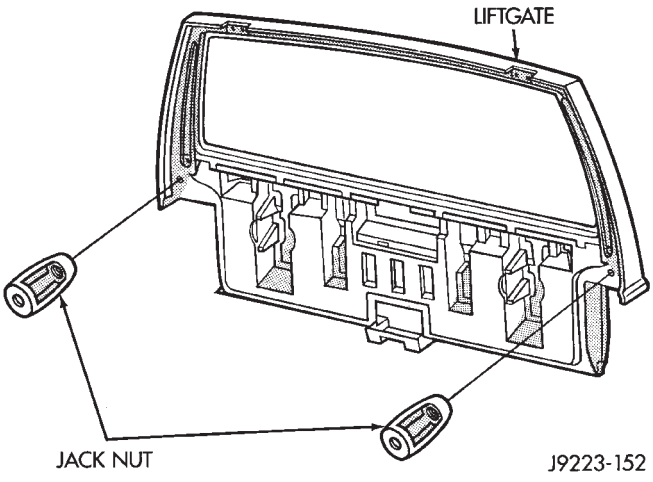

Fig. 5 Stop Bumper Screw Anchors

LIFTGATE OPENING WEATHERSTRIP SEAL—XJ

REMOVAL

(1) Pull the seal away from the flange around the perimeter of liftgate opening and remove it (Fig. 6 and 7).

(2) Clean the flange as necessary.

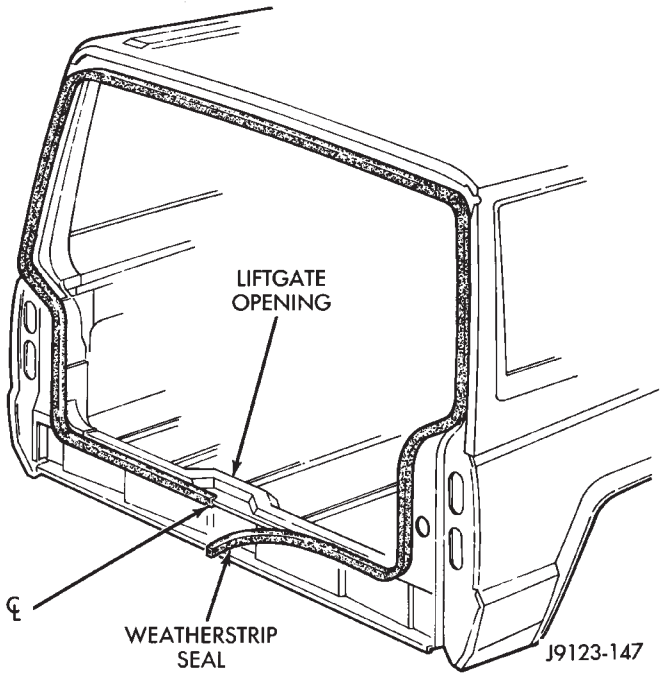

Fig. 6 Liftgate Opening Weatherstrip Seal Removal/ Installation

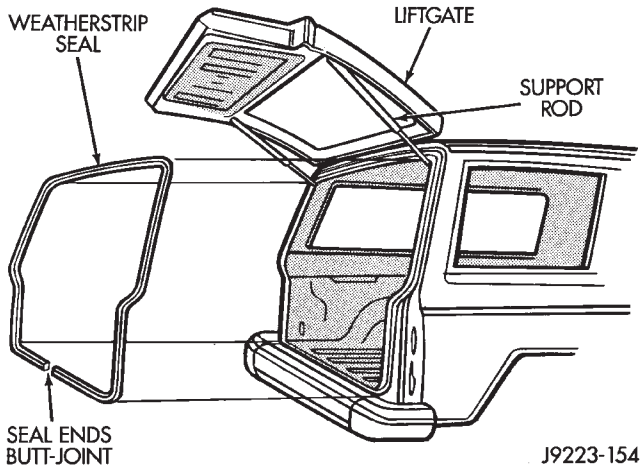

Fig. 7 Liftgate Opening Weatherstrip Seal

INSTALLATION

(1) Position weatherstrip seal in the opening with the left end of the seal at the opening centerline. Install the seal in a clockwise direction.

(2) Move to the left and mate the seal with the bottom-left flange (Fig. 6).

(3) Move upward and mate the seal with the left-side flange.

(4) Move to the right and mate the seal with the top-left roof flange.

(5) Seat the installed part of the seal with a roller. Move the roller from the left-bottom end of seal to the top-left half of the seal.

(6) Move to the right and mate the seal with the top-right roof flange.

(7) Move downward and mate the seal with the right-side flange.

(8) Move to the left and mate the seal with the bottom-right flange.

(9) Center and butt seal the ends together at the centerline.

(10) Seat the remaining part of the seal with a roller. Move the roller the from top-left half of the seal to the right-bottom end of the seal.

LIFTGATE LICENSE PLATE LAMP HOUSING—XJ

REMOVAL

(1) Remove the lamp housing screws from the liftgate (Fig. 8).

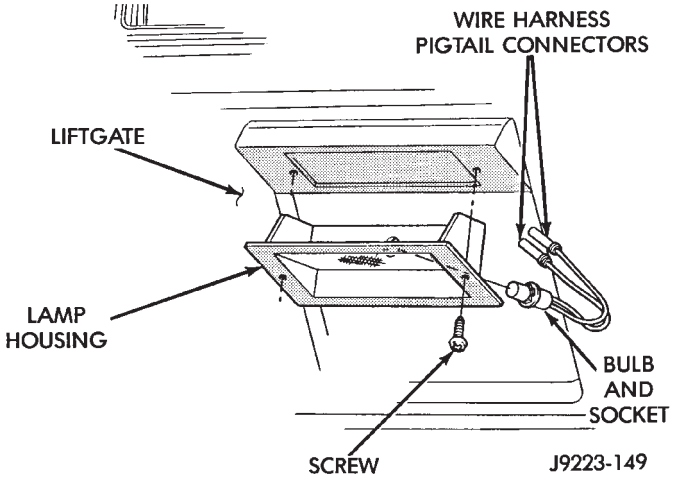

Fig. 8 Liftgate License Plate Lamp Housing

(2) Disconnect bulb socket from lamp housing.

(3) Remove the housing from the liftgate.

INSTALLATION

(1) Position the lamp housing at the liftgate.

(2) Connect the bulb socket to the lamp housing.

(3) Install the lamp housing retaining screws in the liftgate.

LIFTGATE LICENSE PLATE SCREW ANCHOR AND BUMPER—XJ

ANCHOR REPLACEMENT

(1) Remove the screw from the anchor (Fig. 9).

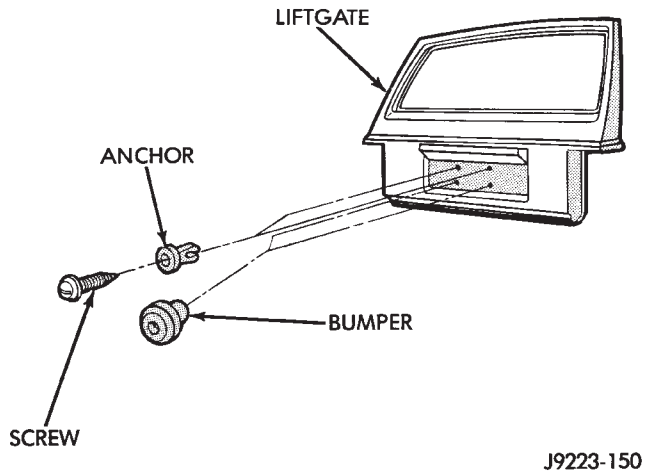

Fig. 9 Liftgate License Plate Screw Anchors and Bumpers

(2) Pry the anchor from the liftgate.

(3) Compress the ends and insert the anchor in the liftgate hole.

(4) Install the screw in the anchor.

BUMPER REPLACEMENT

(1) Pry the bumper from the liftgate.

(2) Insert the replacement screw anchor in the liftgate hole.

1995 Jeep Cherokee/Wrangler
Publication No. 81-370-5146
TSB 26-05-95 July, 1995

STATIONARY WINDOW GLASS

INDEX

page

Interior Rearview Mirror—XJ Removal and Installation 66
Interior Rearview Mirror Support Bracket Replacement—XJ Preparation and Installation . . . 66
Description and Operation 67
Installation—Short Method 69
Installation—Extended Method 71
Rear Door Stationary Window Glass 72
Rear Quarter Vent Window Glass—XJ Removal and Installation 73
Rear Quarter Window Glass/Rear Quarter Plastic Insert—XJ Removal and Installation 73

INTERIOR REARVIEW MIRROR—XJ

MIRROR REMOVAL

(1) Loosen the mirror base-to-bracket setscrew (Fig. 1).

(2) Slide the mirror base upward and off the support bracket (Fig. 2).

MIRROR INSTALLATION

(1) Slide the mirror base onto the support bracket (Fig. 2).

CAUTION: Do not over-tighten setscrew because glass chipping or breakage could result.

(2) Tighten the setscrew to 1 N·m (9 in-lbs) torque (Fig. 1).

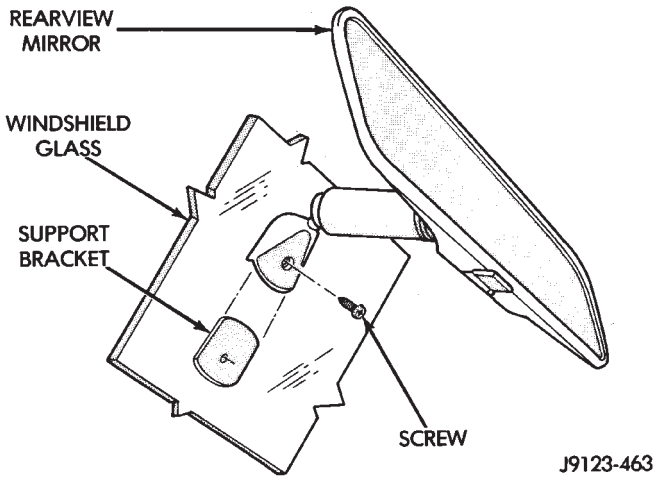

Fig. 1 Interior Rearview Mirror Setscrew Removal/Installation

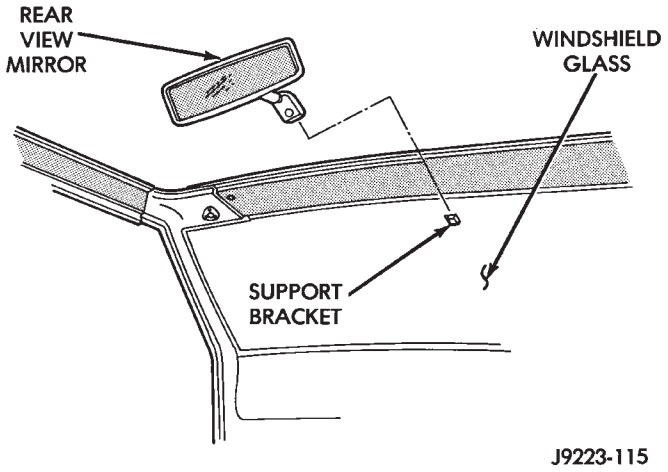

Fig. 2 Interior Rearview Mirror Removal/Installation

INTERIOR REARVIEW MIRROR SUPPORT BRACKET REPLACEMENT—XJ

PREPARATION

(1) Mark reference lines for the mirror support bracket on the outside of windshield glass with a wax pencil.

(2) If the vinyl pad remained on the windshield glass, soften and remove it with a heat gun.

(3) Clean the support bracket surface area on the glass. Use a mild abrasive cleaning powder on a cloth saturated with isopropyl (rubbing) alcohol.

(4) Lightly sand the contact surface on the support bracket with fine grit sandpaper. Wipe bracket contact surface clean with a paper towel and alcohol.

1995 Jeep Cherokee/Wrangler
Publication No. 81-370-5146
TSB 26-05-95 July, 1995

INSTALLATION

(1) Apply adhesive to the act surface on the support bracket according as follows:

- crush the vial in the plastic housing of the accelerator to saturate the felt applicator.
- remove the paper sleeve.
- apply a generous amount of accelerator to the contact surface on the mirror support bracket.
- do not touch the support bracket contact surface after the accelerator has been applied.
- allow the accelerator to dry for at least five minutes.

and

(2) Apply accelerator to the support bracket contact surface on the windshield glass. Allow the accelerator to dry for one minute.

(3) Install the mirror bracket on the windshield glass as follows:

- apply one drop of adhesive at the center of support bracket contact surface on windshield glass.
- immediately apply an even coat of adhesive to the contact surface on the support bracket.
- align the support bracket with the position reference lines on the windshield glass, then
- press and hold the support bracket in-place for at least one minute.

Ensure that the mirror support bracket is correctly aligned because the adhesive will cure rapidly.

(4) Allow the adhesive to cure for 8-10 minutes, then remove any residue adhesive with an alcohol-dampened cloth.

(5) Allow the adhesive to cure for an additional 8-10 minutes before installing the mirror base on the support bracket.

DESCRIPTION AND OPERATION

SAFETY PRECAUTIONS

WARNING: DO NOT OPERATE THE VEHICLE WITHIN 24 HOURS OF WINDSHIELD INSTALLATION. IT TAKES AT LEAST 24 HOURS FOR THE URETHANE ADHESIVE TO CURE. IF IT IS NOT CURED, THE WINDSHIELD MAY NOT PERFORM PROPERLY IN AN ACCIDENT.

URETHANE ADHESIVES ARE APPLIED AS A SYSTEM. USE GLASS CLEANER, GLASS PREP SOLVENT, GLASS PRIMER, AND PINCHWELD (FENCE) PRIMER PROVIDED BY THE ADHESIVE MANUFACTURER. IF NOT, STRUCTURAL INTEGRITY COULD BE COMPROMISED.

BE SURE TO REFER TO THE URETHANE MANUFACTURER'S DIRECTIONS FOR CURING TIME SPECIFICATIONS, AND DO NOT USE ADHESIVE AFTER ITS EXPIRATION DATE.

VAPORS THAT ARE EMITTED FROM THE URETHANE ADHESIVE OR PRIMER COULD CAUSE PERSONAL INJURY, USE THEM IN A WELL VENTILATED AREA.

SKIN CONTACT WITH URETHANE ADHESIVE SHOULD BE AVOIDED, OR PERSONAL INJURY MAY RESULT.

ALWAYS WEAR EYE AND HAND PROTECTION WHEN WORKING WITH GLASS.

CAUTION: Protect all painted or trimmed surfaces from coming in contact with urethane or primers.

Be careful not to damage painted surfaces when removing moldings or cutting urethane around windshield.

It is difficult to salvage a windshield during the removal operation. The windshield is part of the structural support for the roof. The urethane bonding used to secure the windshield to the fence is difficult to cut or clean from any surface. If the moldings are set in urethane, it would also be unlikely they could be salvaged. Before removing the windshield, check the availability of the windshield and moldings from the parts supplier.

1995 Jeep Cherokee/Wrangler
Publication No. 81-370-5146
TSB 26-05-95 July, 1995

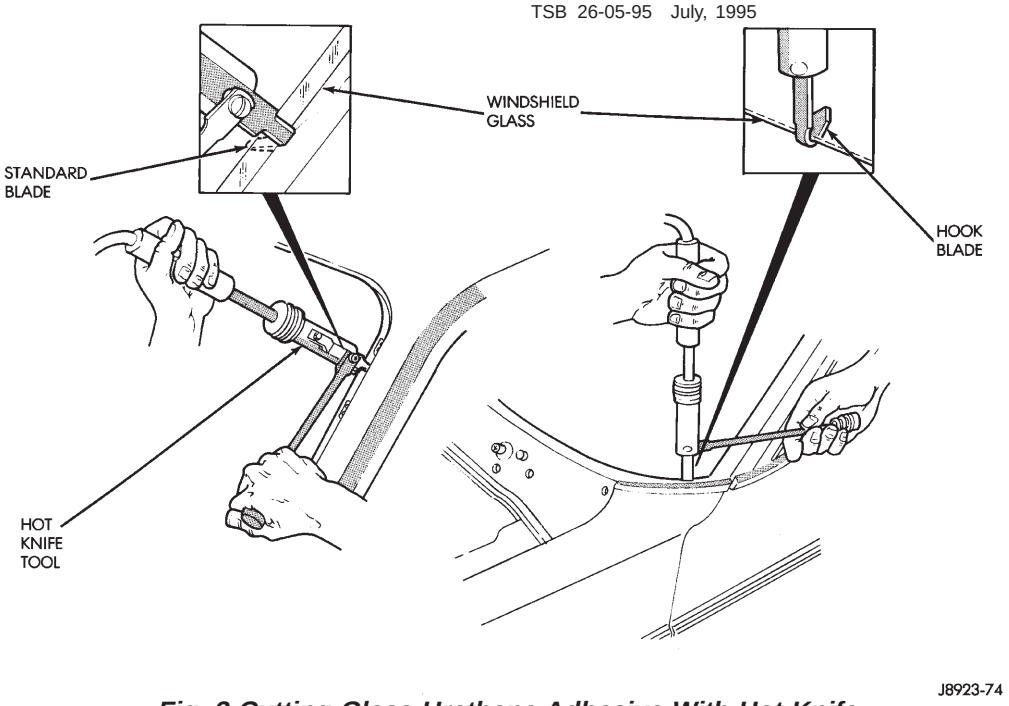

Fig. 3 Cutting Glass Urethane Adhesive With Hot Knife

REMOVAL AND INSTALLATION

WINDSHIELD

Windshield glass removal is accomplished by the use of a razor knife and an electric hot knife to cut through the urethane adhesive. This removal method applies in all instances.

Depending on the circumstances, either one of two windshield glass installation methods can be used:

- The short method.
- The extended method.

The short method is used when the windshield glass is removed intact, and the body opening and the pinchweld flanges do not require repair.

The extended method must be used when the body opening or a flange is damaged. The extended method must also be used when urethane no longer adheres to either the windshield glass or the pinchweld flanges.

REMOVAL

NOTE: When using the windshield glass short installation method, ensure that a bead of urethane remains on the pinchweld flange.

(1) Cover the interior and exterior body surface areas with a protective covering.

(2) With doors open, remove the windshield wiper arms, interior trim moldings and rearview mirror.

(3) Make a cut around the **perimeter** of the windshield glass along the glass edge with a razor knife.

(4) Clean the blade of the hot knife with solvent and a cloth. Sharpen the blade with a fine-tooth file.

CAUTION: When cutting through urethane with a hot knife, do not allow the knife blade to remain stationary at any location. Excessive heat will permanently soften urethane and cause complete replacement of the urethane.

(5) Start the hot knife blade (special tool C-4386) between the glass and the urethane. Next, cut the adhesive as close to the glass edge as possible (Fig. 1). Allow as much adhesive to remain on the pinchweld flange as possible. **For best cutting results, clean the knife blade frequently with steel wool while the blade is hot.**

(6) Remove the windshield glass from the body opening.

(7) After the hot knife blade has cooled, clean the blade with solvent and a clean cloth.

INSTALLATION—SHORT METHOD

Normally, after a replacement windshield glass is installed, the rearview mirror bracket also requires installation. **Do not install the bracket until after the windshield glass installation is completed.**

(1) Inspect the windshield opening pinchweld flanges. Prime any bare spots with urethane primer. Allow a minimum of 18 minutes for dry time.

(2) Inspect urethane bead for high spots. Level bead by shaving off high spots with a razor knife.

(3) Clean the outer edge of windshield glass with naphtha or an equivalent product.

(4) Prime outer perimeter of interior side of glass 16 mm (5/8 inch) from edge. Use a wipe-off type urethane primer and wipe glass dry after primer application.

NOTE: The reveal molding has an adhesive applied to the windshield contact surface to help secure the molding to the windshield during the installation procedure.

(5) Apply the molding to the windshield:

- With the molding at room temperature, press the molding onto the windshield corners.
- From corner to corner, work the molding to the center of each side. (Some stretching of the molding may be required during this procedure.)

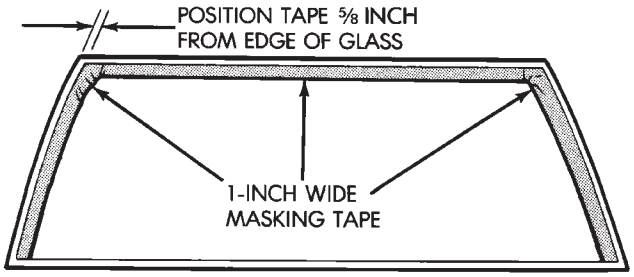

Fig. 4 Masking Tape Location For Blackout Primer

(6) Place the glass on the pinchweld flanges and inspect for gaps in the urethane. Gaps in excess of 3 mm (1/8 inch) must be filled with urethane.

(7) Adjust windshield glass position until it is aligned with the flanges and adhesive. Next, make alignment marks on the glass and body.

(8) Remove the windshield glass and position it on a flat surface.

CAUTION: Avoid spilling or dripping primer on painted surfaces. Clean spills or drips immediately. The primer will damage the paint if it remains on the surface for any length of time.

(9) If the replacement windshield glass does not have blackout primer:

- Attach a 25 mm (1 in) wide masking tape band around the interior side of the glass 16 mm (5/8 in) from the edge of the glass.
- Do not attach tape along the bottom of the glass and **attach it only to the inside of the glass.**

1995 Jeep Cherokee/Wrangler
Publication No. 81-370-5146
TSB 26-05-95 July, 1995

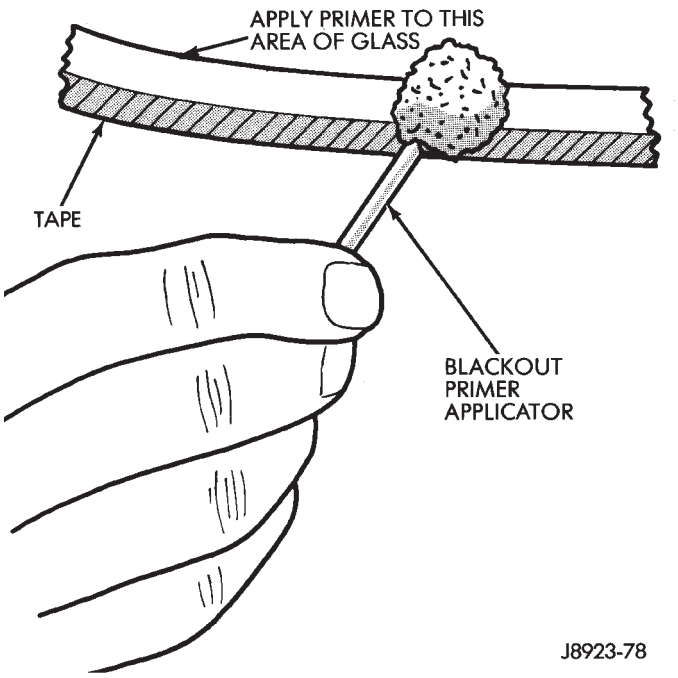

Fig. 5 Blackout Primer Application

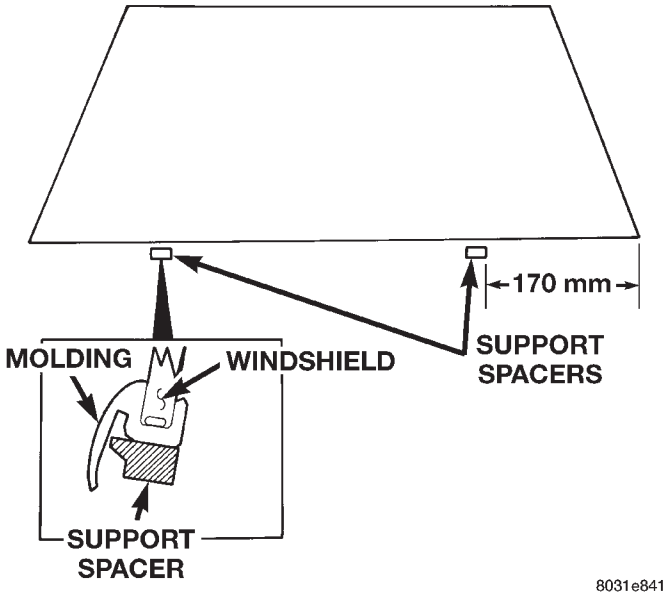

Fig. 6 Windshield Bottom Support Spacers

- Clean the 16-mm (5/8-in) wide surface area around the glass with isopropyl alcohol.
- Thoroughly mix and apply glass blackout primer to the 16 mm (5/8 in) surface area around the interior side of the glass (Fig. 3).
- Allow the primer to dry for at least 10-12 minutes.

(10) Apply a small amount of adhesive to the bottom support spacers and attach the support spacers to the bottom of the windshield, 170 mm inboard from the outer windshield edge (Fig. 4).

(11) Cut the urethane adhesive applicator nozzle (Fig. 7).

CAUTION: Be prepared to install glass immediately after applying the adhesive, as the adhesive will begin to cure in less than 10 minutes.

(12) Apply a continuous, 6-mm (1/4-in) diameter bead of urethane adhesive to the surface area.

(13) Align the glass with the reference marks and position the glass on the pinchweld flanges. Ensure that the windshield glass is correctly seated on the support spacers.

(14) Force the windshield glass inward just enough to wet-out and set the urethane. Use care to avoid excessive squeeze-out of adhesive.

(15) Water test the windshield with a water spray after installation. Do not direct high pressure streams of water directly at urethane. If any leaks are detected, apply urethane as necessary.

(16) If used remove the masking tape from the inner surface of the glass.

(17) Install all components and clean the vehicle.

(18) Open the vehicle windows to prevent interior pressure while the urethane is curing. **If not vented, pressure in the interior of the vehicle may interfere with proper glass bonding.**

(19) Install the rearview mirror.

1995 Jeep Cherokee/Wrangler
Publication No. 81-370-5146
TSB 26-05-95 July, 1995

INSTALLATION—EXTENDED METHOD

Normally, after a windshield is installed, the rear-view mirror bracket also requires installation. **Do not install the bracket until after the windshield installation is completed.**

(1) Remove all of the urethane from all pinchweld flanges. Use an electric hot knife and a plow-type knife blade to remove the adhesive.

(2) Inspect and repair the windshield opening and pinchweld flanges.

(3) Prime the pinchweld flanges with a urethane base primer. However, if the flange is color-coated with paint, prime the flanges with a paint finish primer. **This is important because urethane adhesive will not adhere to all color-coat paints.** Allow primer sufficient time to dry.

NOTE: The reveal molding has an adhesive applied to the windshield contact surface to help secure the molding to the windshield during the installation procedure.

(4) Apply the reveal molding to the windshield:

- With the molding at room temperature, press the molding onto the windshield corners.
- From corner to corner, work the molding to the center of each side. (Some stretching of the molding may be required during this procedure).

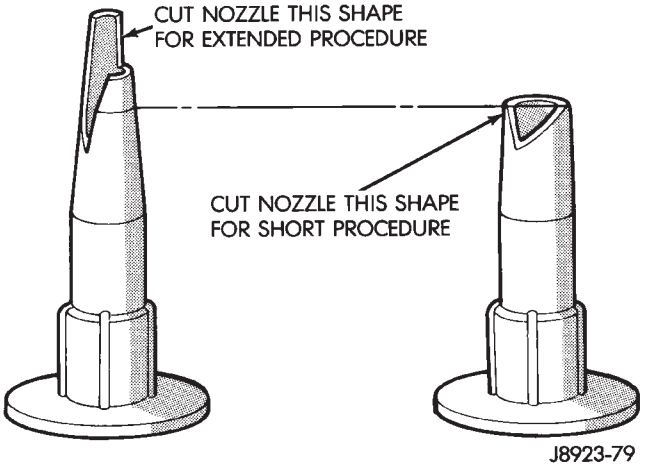

Fig. 7 Applicator Nozzle Preparation

(5) Install and inspect the fit of the windshield on the pinchweld flanges as follows:

- Position windshield until it is aligned within windshield opening.
- Measure the gap between the pinchweld flanges and glass around perimeter of the glass and flange.
- The reveal molding should equally cover the A-Pillars on both sides.
- The flanges should also extend above the glass edge equally around the perimeter of the opening.

1995 Jeep Cherokee/Wrangler
Publication No. 81-370-5146
TSB 26-05-95 July, 1995

(6) If the pinchweld flanges require repair, remove the windshield glass and straighten, align, or repair the flange(s) as necessary.

(7) Position the windshield in the opening and inspect the windshield fit again. Mark the windshield final position on the glass and body with a wax pencil (or use masking tape). The marks (or masking tape) will be used for installation alignment reference.

(8) If the replacement windshield does not have blackout primer:

- Attach a 25-mm (1-in) wide masking tape band around the interior side of glass 16 mm (5/8 in) from edge of glass (Fig. 2).
- Do not attach tape along the bottom of the glass and attach only to the inside of glass.
- Thoroughly mix and apply blackout primer to the 16 mm (5/8 in) surface area around the interior side of the glass (Fig. 4).
- Allow the primer to dry for at least 10-12 minutes.

(9) Apply a small amount of adhesive to the bottom support spacers and attach the support spacers to the bottom of the windshield, 170 mm inboard from the outer windshield edge (Fig. 6).

(10) Cut the urethane applicator nozzle (Fig. 7).

(11) Apply a continuous bead of urethane to the surface area with blackout primer on the interior side of glass. The bead should be 9-mm (3/8-in) wide by 12.7-mm (1/2-in) deep for best results.

CAUTION: Be prepared to install the windshield immediately after applying the adhesive, as the adhesive will begin to cure in less than 10 minutes.

(12) Align the windshield with the wax pencil installation alignment reference marks (or the tape strips). Position the windshield on pinchweld flanges and spacers.

(13) Force the windshield inward just enough to wet-out and set the urethane. Use care to avoid excessive squeeze-out of adhesive.

(14) Water test the windshield with a water spray after installation. Do not direct high pressure streams of water directly at the urethane. If any leaks are detected, apply urethane as necessary.

(15) If used, remove the masking tape from the inner surface of glass.

(16) Install all components and clean the vehicle. If necessary, refer to the installation procedures.

(17) Open the vehicle windows to prevent interior pressure while the urethane adhesive is curing. **If not vented, pressure in the interior of vehicle will interfere with glass bonding.**

(18) Install the rearview mirror on the bracket.

REAR DOOR STATIONARY WINDOW GLASS

REMOVAL

(1) Lower the window glass.

(2) Pry the window beltline molding away from the clips and remove the molding from the door.

(3) Remove the window weatherstrip seals from the door.

1995 Jeep Cherokee/Wrangler
Publication No. 81-370-5146
TSB 26-05-95 July, 1995

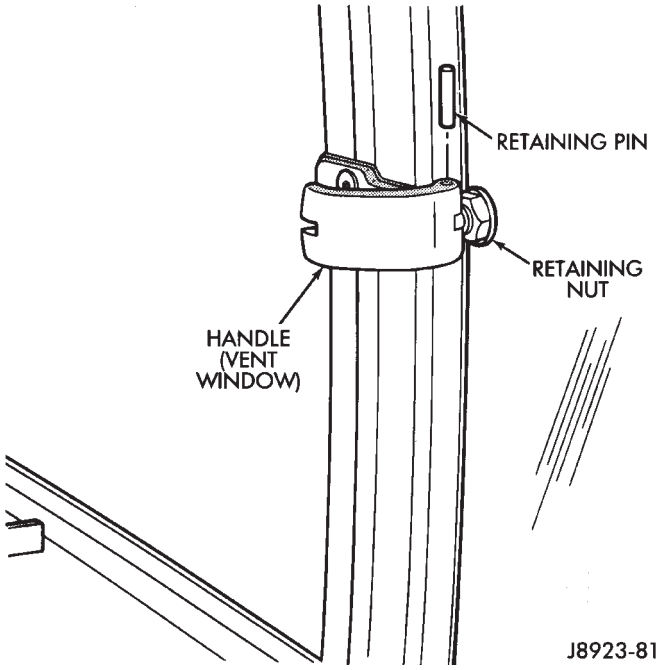

Fig. 8 Vent Window Handle Removal/Installation

REAR QUARTER VENT WINDOW GLASS—XJ

REMOVAL

(1) Remove the vent window handle retaining pin and nut (Fig. 8).

(2) Remove the hinge-to-glass screws and remove the window glass. If glass adheres to the hinges, remove the glass by carefully pushing out hinge screw inserts.

INSTALLATION

(1) Position the vent window glass at the hinges and install the screws.

(2) Install the handle, pin and nut (Fig. 8).

(3) Test the vent window for water leaks.

REAR QUARTER WINDOW GLASS/REAR QUARTER PLASTIC INSERT—XJ

REMOVAL

(1) If equipped, remove the quarter window reveal molding (Fig. 9).

(2) Remove the quarter window interior trim covers.

(3) Separate the weatherstrip seal lip from the window opening flanges. Use a pry tool and carefully push the window glass and seal outward.

(4) Remove the weatherstrip seal and window glass from window opening.

(5) Remove the weatherstrip seal from the window glass.

INSTALLATION

(1) Clean the original sealant from the weatherstrip channels and window opening flanges.

(2) Apply a 4-mm (1/6-in) diameter bead of sealant to the window channel in the weatherstrip seal.

(3) Install the weatherstrip on the window glass. Install the seal installation cord in the window opening flange channel as follows:

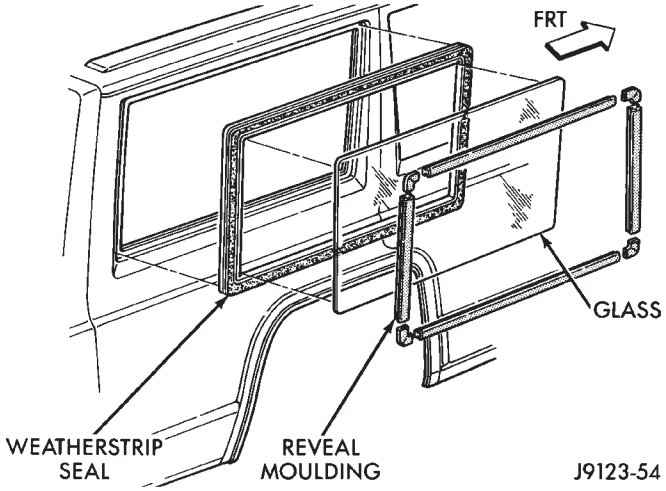

Fig. 9 Quarter Window Reveal Molding, Glass and Seal

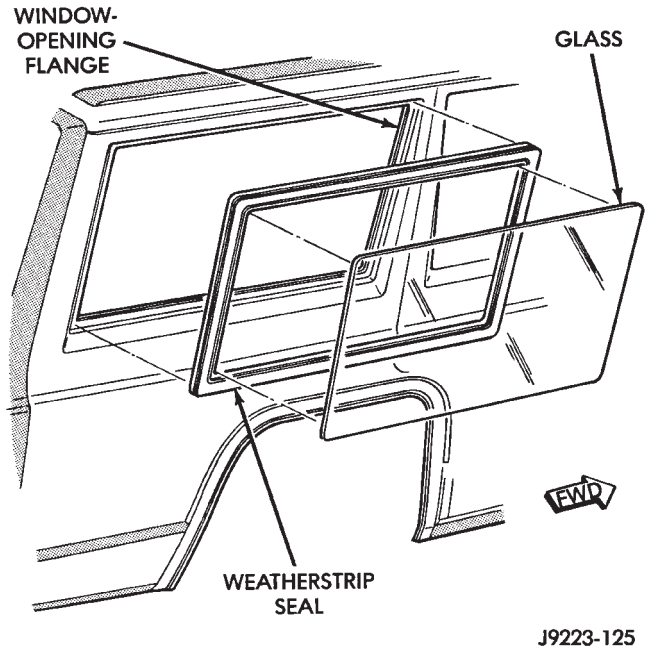

Fig. 23 Quarter Window Glass and Seal

- Moisten a length of 6-mm (1/4-in) diameter cord with a soap and water solution.
- Ensure that the cord is long enough to go all the way around the perimeter of the weatherstrip.
- Insert the cord into the window opening flange channel in the weatherstrip seal.

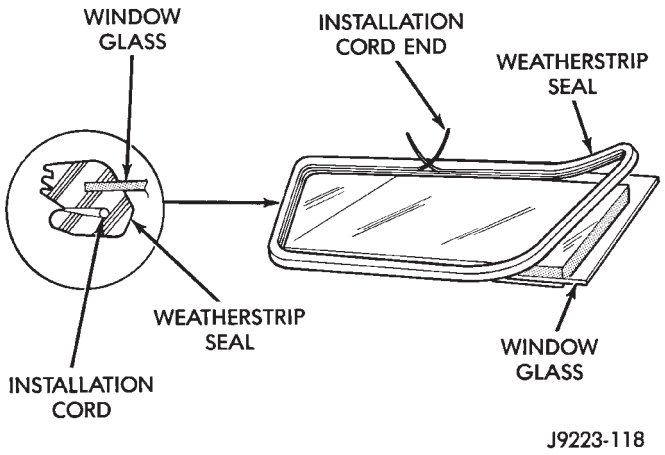

Fig. 24 Weatherstrip Seal and Cord Installation

(4) Apply a 6-mm (1/4-in) diameter bead of sealant to the window opening flanges.

(5) For two-door vehicles, apply a 3-mm (1/8-in) diameter bead of sealant at the quarter panel applique and liftgate pillar seam.

(6) Position the quarter window glass and the weatherstrip seal in the window opening (Fig. 25 and 26) with the free ends of the cord inside the vehicle (Fig. 27).

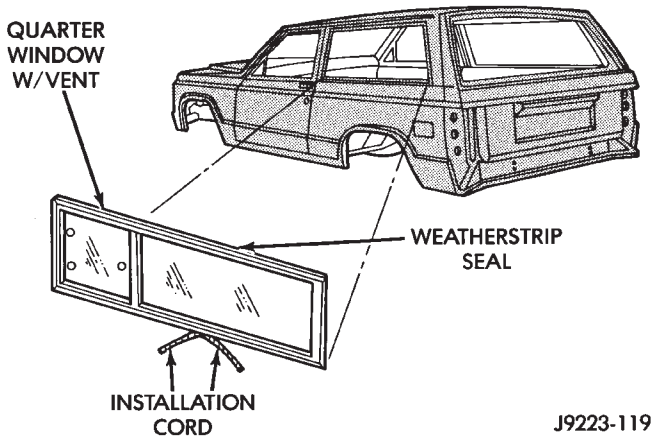

Fig. 25 Quarter Window With Vent

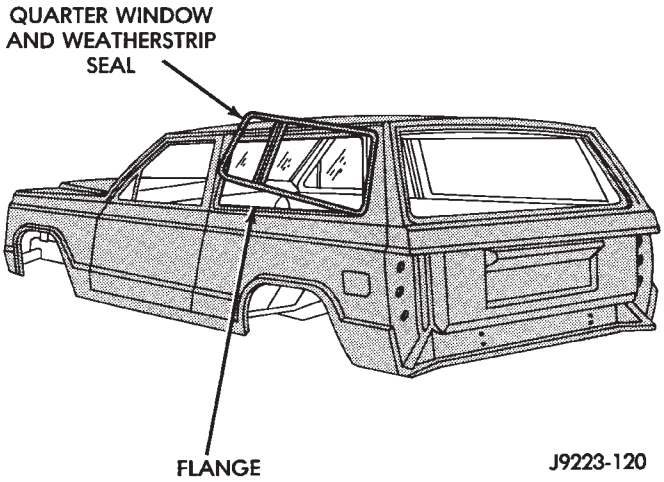

Fig. 26 Quarter Window Glass and Seal In Window Opening

(7) Pull on each end of the cord to pull the weatherstrip seal channel lip over the window opening flanges.

(7) Test the vent window for water leaks.

(8) Install the interior trim cover.

(9) If equipped, install the quarter window reveal molding.

LIFTGATE WINDOW GLASS—XJ

REMOVAL

(1) If equipped, remove the liftgate window reveal molding (Fig. 28).

(2) Remove the interior trim panels.

(3) Use a pry tool to separate the weatherstrip seal lip from the window opening flanges. Push the glass and weatherstrip seal outward from the top toward the rear of the vehicle.

(4) Remove the glass and weatherstrip seal from the liftgate (Fig. 28).

(5) Remove the weatherstrip seal from the window glass.

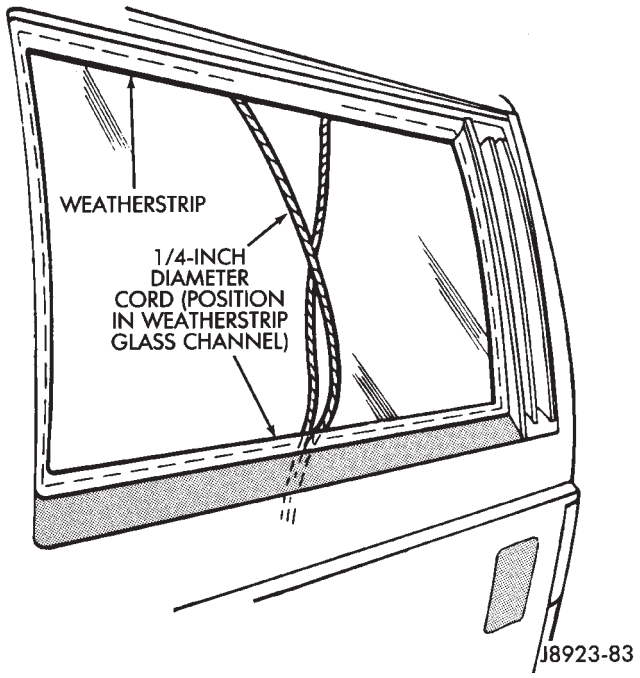

Fig. 27 Quarter Window Glass and Seal Installation

(6) Clean the weatherstrip channels and window opening flanges.

INSTALLATION

(1) Apply a 4-mm (1/6-in) diameter bead of sealant to liftgate glass channel in the weatherstrip seal (Fig. 28).

(2) Install weatherstrip seal on the glass (Fig. 29). Install the seal installation cord in the window opening channel as follows:

- Moisten a length of 6-mm (1/4-in) diameter cord with a soap and water solution.
- Insert the cord into the window opening flange channel in the weatherstrip seal.

(3) Apply a 6-mm (1/4-in) diameter bead of sealant around the perimeter of the window opening flange in the liftgate (Fig. 28).

(4) Install the window glass and the weatherstrip seal in the window opening with the cord according to the following instructions:

- Position the window glass and the weatherstrip seal in the window opening with the free ends of the cord inside the vehicle (Fig. 30).
- Pull on each end of the cord to pull the weatherstrip seal channel lip over the window opening flange (Fig. 31).

(5) Test the liftgate window for water leaks.

(6) Install the interior trim covers.

(7) If equipped, install the liftgate window reveal molding (Fig. 28).

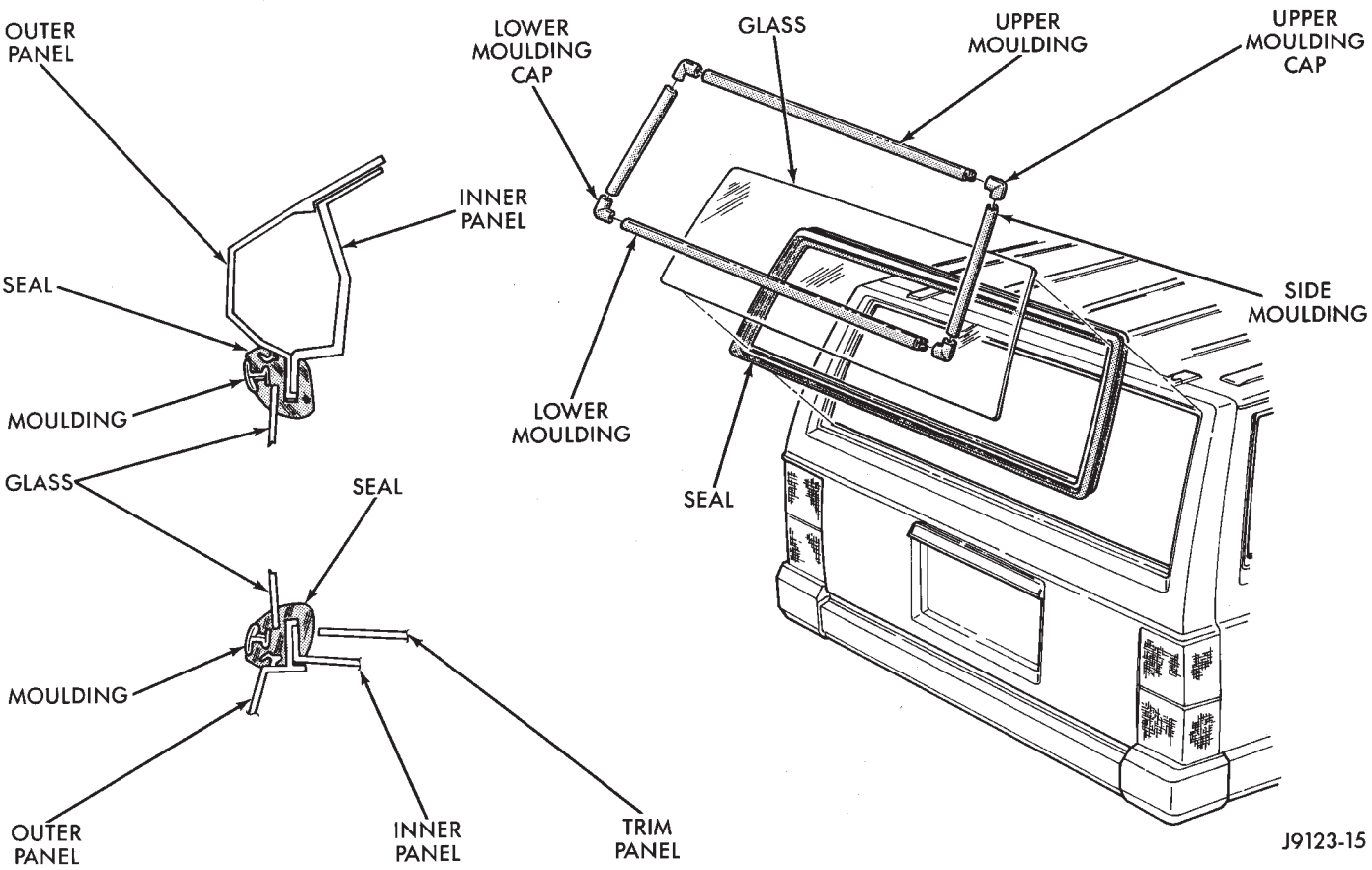

Fig. 28 Liftgate Window Glass Reveal Molding, Glass and Seal

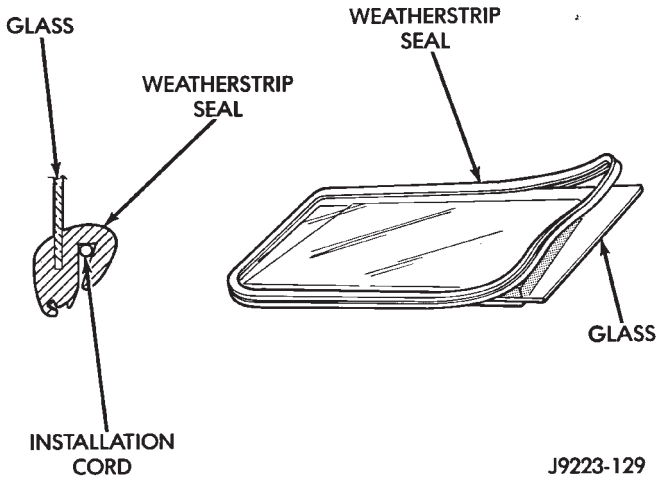

Fig. 29 Weatherstrip Seal and Cord Installation

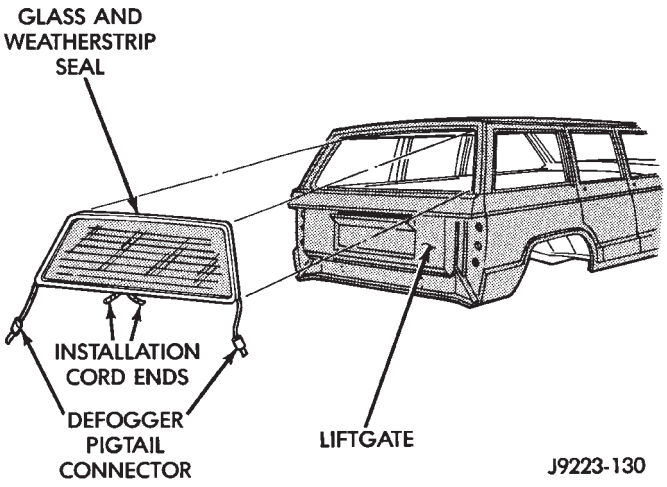

Fig. 30 Liftgate Window Glass Installation With Cord

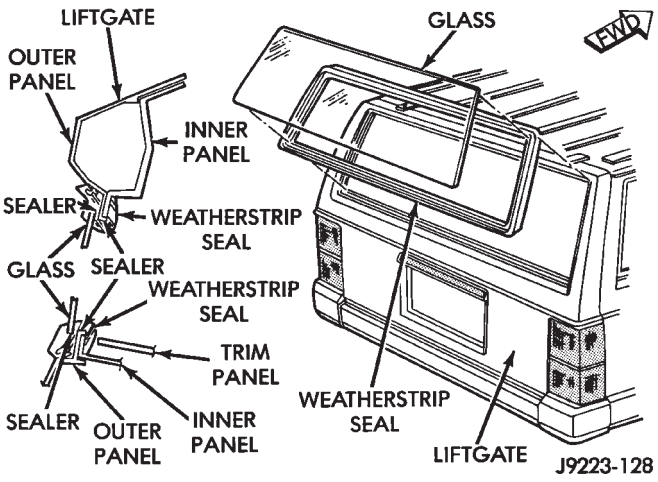

Fig. 31 Liftgate Window Glass and Weatherstrip Seal

STATIONARY GLASS WATER LEAK DETECTION AND REPAIR—XJ

SERVICE INFORMATION

Water leaks around the windshield or a stationary window glass can be sealed without removing the glass. If the windshield/window glass is bonded and only has a small leak, seal it with a liquid butyl sealant. If the weatherstrip seal or urethane adhesive has a large break, a urethane adhesive must be used to seal the leak.

LEAK TEST

Water test the windshield/window with a spray only. **Do not use hard streams of water.**Work from the bottom to the top of windshield/window glass.

If a water leak exists between the glass and weatherstrip seal (or between the seal and a body flange):

- Push the glass outward at the leak area, and determine the extent of the gap.

Push the glass outward while a helper sprays the windshield/window with water.

SEALING MINOR LEAK AREAS

(1) Thoroughly clean and remove all foreign material from the leak area. Dry area with compressed air.

(2) Seal the leak area with butyl sealant. Allow the sealant to cure for at least 1/2 hour. Next, water test the glass to ensure that the leak is sealed.

SEALING MAJOR LEAK AREAS

(1) Thoroughly clean the leak area.

(2) As applicable, apply primer to either the windshield/window or weatherstrip seal leak area. Use blackout primer on the windshield/window and urethane primer on the weatherstrip seal.

(3) Apply urethane adhesive to the leak area. Use an adhesive cartridge with a pointed nozzle.

(4) Water test the windshield/window immediately with cold water spray. Allow water to spill over the edge of the windshield/window and weatherstrip seal. **Do not direct a hard stream of water on recently applied urethane.**

(5) Apply additional urethane adhesive, if necessary.

(6) Remove any excess urethane adhesive.

TRAILER HITCH

TRAILER HITCH—XJ

CLASS III HITCH

A class III weight-distributing/equalizer type hitch can be used to tow a trailer:

- Having a maximum gross weight of 5,000 lbs/2250 kg.
- Having a maximum tongue weight of 750 lbs/332 kg).

The following vehicle basic equipment is required for class III trailer towing:

- P205/75R15 or larger tires.
- Full size spare tire.
- Trailer sway control.
- Trailer tow wire harness and connector.
- Heavy duty turn signal flasher element.
- Heavy duty axle (with synthetic lubricant).
- Heavy duty cooling system.
- Heavy duty generator/battery.
- Auxiliary automatic transmission fluid cooler.
- I-6, 4.0L engine.

Wide-angle type door mirrors are recommended but not required.

WIRE HARNESS CONNECTORS

CLASS I HITCH CONNECTOR

The trailer tow wire harness connector for class I trailer hitches is a 5-terminal, in-line type connector. Terminal 5 is the source for vehicle ground (Fig. 1)

CLASS III HITCH CONNECTOR

The trailer tow wire harness connector for class III trailer-tow hitches is a 7-terminal, circular type connector (Fig. 2).

The 12-volt circuit for the trailer is protected from overloads. A auto-reset type circuit breaker is located in the trailer tow wire harness near the plug-in relays.

CAUTION: The trailer tow wire harness package does not include a vehicle battery isolator unit. Because of this, the trailer battery can totally discharge the vehicle battery if the engine is not operated for an extended period of time.

A blue wire (without a connector) located under instrument panel near fuse panel is available for trailer electric brake control unit.

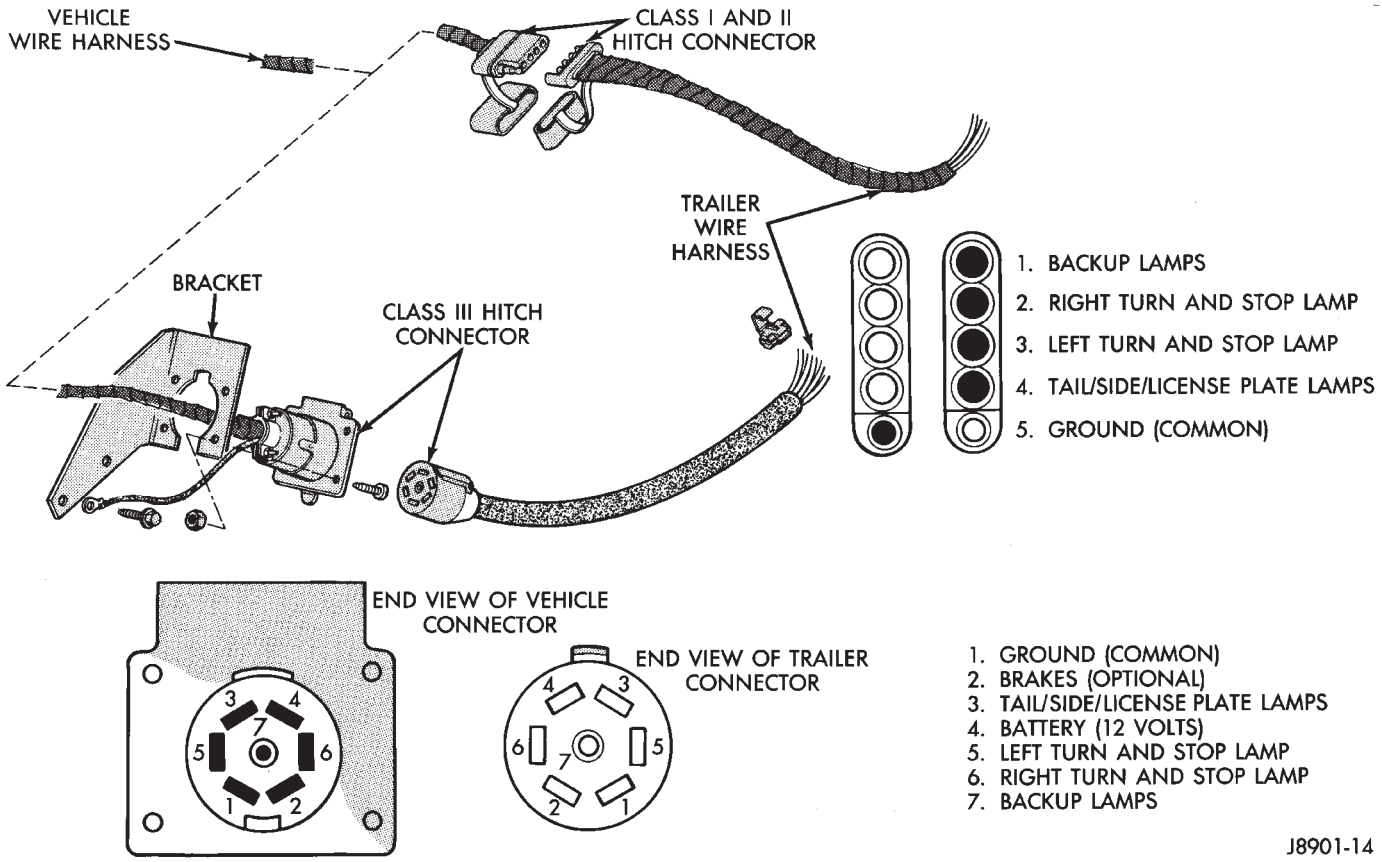

Fig. 1 Trailer Tow Wire Harness Connectors

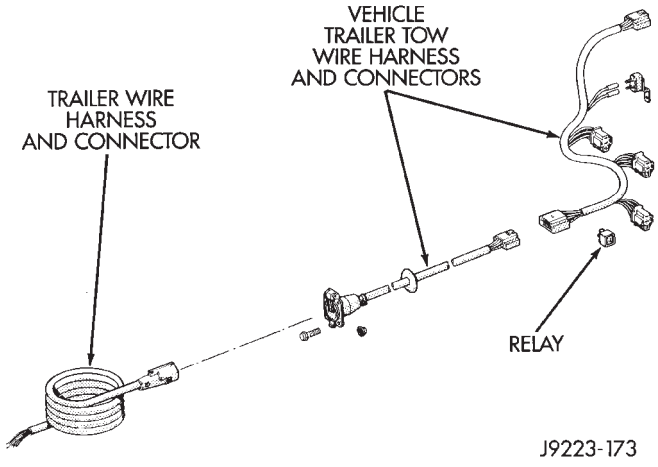

Fig. 2 Class III Trailer Tow Wire Harness and Connectors

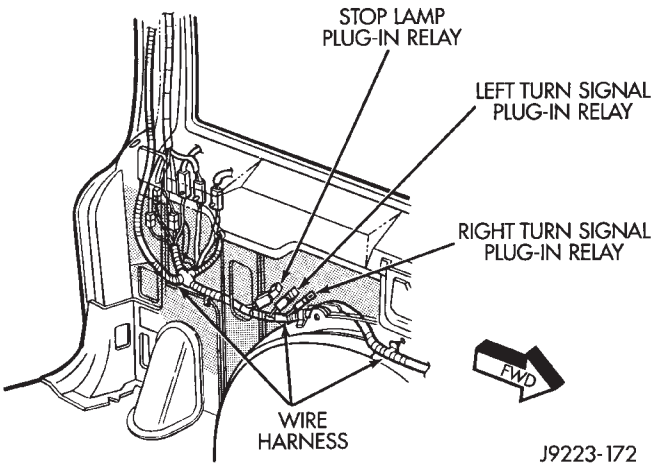

Fig. 3 Class III Trailer Tow Wire Harness Plug-In Relays

The stop lamp and turn signal plug-in relays are located behind left quarter trim panel (Fig. 3).

HITCH REMOVAL—XJ VEHICLES

An XJ class III, weight-distributing/equalizer type hitch (Fig. 4)is comprised of:

- Towing tube with a ball mount receptacle.
- Various reinforcement/support brackets that are attached to the vehicle frame sills and rear crossmember with bolts.

(1) If necessary, remove the trailer tow wire harness connector from the hitch (Fig. 5).

(2) Support the hitch.

(3) Remove the bolts that attach the towing tube to the frame sills and reinforcement bracket. If equipped, remove the fuel tank skid plate.

The reinforcement brackets are held on the frame sills with two blind rivets.

(4) Remove the bolts from the plate bracket and rear crossmember and lower the support and hitch.

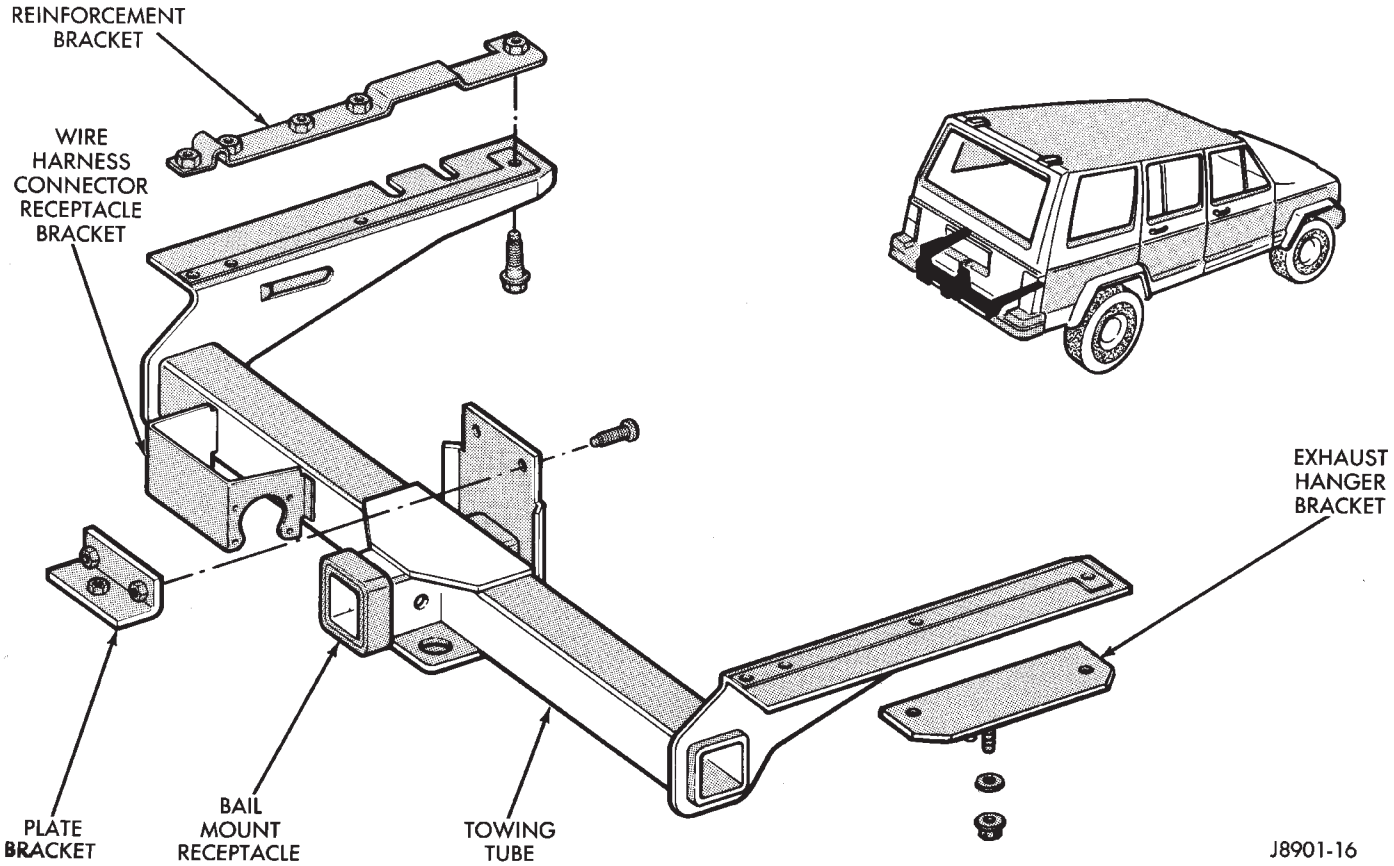

Fig. 4 Equalizer Type Hitch—XJ Vehicles

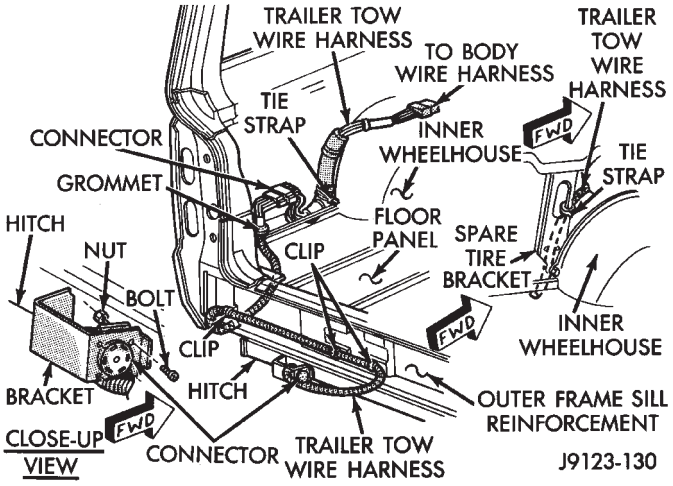

Fig. 5 Trailer Tow Wire Harness Connector

INSTALLATION—XJ VEHICLES

(1) Install frame reinforcement brackets, if removed. Slide the brackets through the vehicle rear sill openings and hold in position on the frame sills with blind rivets (Fig. 6).

(2) Place hitch on a lifting device. Raise, position hitch at the proper location for installation on vehicle and support it.

(3) If equipped, position fuel tank skid plate on vehicle frame sills.

(4) Loosely install the bolts to attach the towing tube (and the skid plate) to frame sills and reinforcement brackets.

(5) Position the plate bracket and install the attaching bolts through the vehicle rear crossmember.

(6) Tighten all bolts/nuts to the specified torque:

- Towing tube-to-reinforcement bracket bolt, 50 N·m (37 ft. lbs.).
- Plate bracket-to-rear crossmember nut, 52 N·m (40 ft. lbs.).

(7) Remove the lift/support and, if removed, attach the trailer wire harness connector to the hitch.

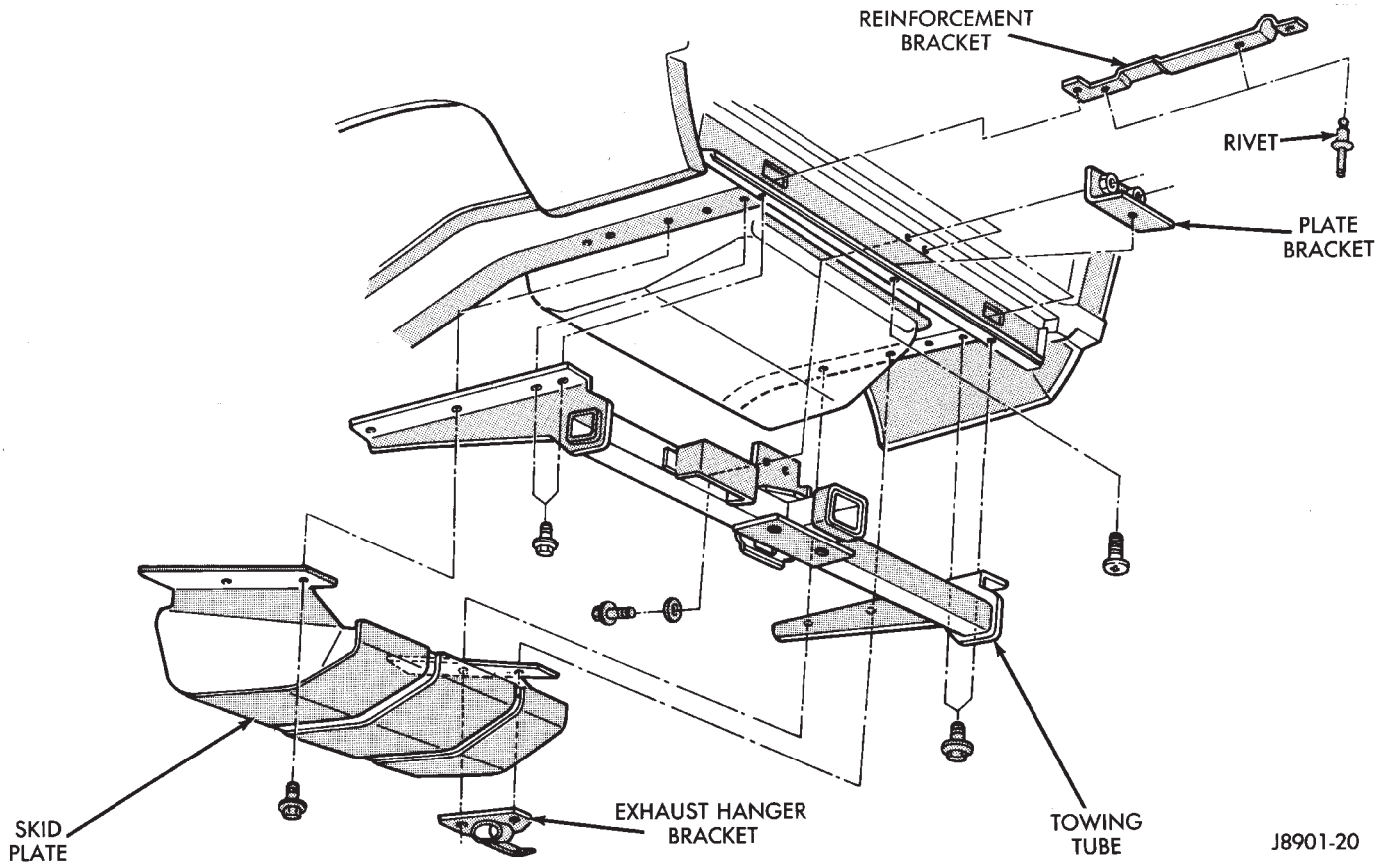

Fig. 6 Reinforcement Bracket and Hitch Installation

INTERIOR COMPONENTS

INDEX

	page
Assist Handle—XJ	89
B/C-Pillar and Liftgate Pillar Trim Covers—XJ	88
Bucket Seat Cushion and Cover—XJ	81
Bucket Seat Platform—XJ	82
Bucket Seatback Cover and Frame—XJ	81
Cargo Barrier—XJ	101
Cargo Lamp—XJ	94
Carpets and Floor Mats—XJ	99
Dome Lamp—XJ	93
Front Bucket Seats—XJ	81
Front Carpet/Mat—XJ	99
Front Inner Scuff Plate/Cowl Side Trim Panel—XJ	86
Front Shoulder Belt/Buckle—XJ	90
Full Floor Console—XJ	95
Headliner—XJ	92
I/P Ash Receiver Tray Lamp—XJ	80
Instrument Cluster Bezel—XJ	80
Interior Trim Panels and Scuff Plates—XJ	84
Jack Storage—XJ	97
Keyless Entry Receiver—XJ	93
Mini-Console with Floor Shift—XJ	94
Mini-Floor Console—XJ	94
Outer Scuff Plates—XJ	89
Overhead Console—XJ	93
Parking Brake Handle Cover—XJ	94
Quarter and Wheelhouse Trim Panels—XJ	87
Quarter Trim Panel Extension—XJ	87
Rear Carpet/Mat—XJ	100
Rear Seat Cushion Cover—XJ	82
Rear Seat Cushion—XJ	82
Rear Seatback Cover—XJ	84
Rear Seatback Latch Striker and Bumper—XJ	84
Rear Seatback—XJ	83
Rear Shoulder/Lap Belt/Buckle—XJ	91
Sound Bar—XJ	94
Spare Tire/Wheel Holddown and Floor Brackets—XJ	98
Sunvisors—XJ	93
Windshield Side Molding—XJ	86

INSTRUMENT CLUSTER BEZEL—XJ

REMOVAL

(1) Remove the bezel retaining screws (Fig. 1).

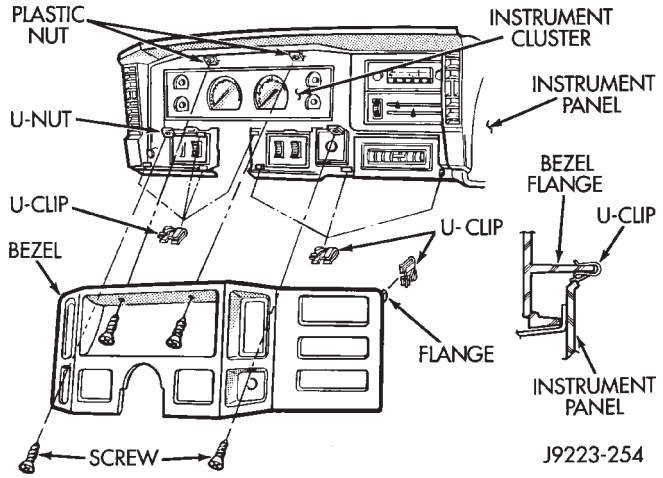

Fig. 1 Instrument Bezel Removal/Installation

(2) Separate the bezel from the U-clips and remove it from the upper section of the instrument panel.

(3) If necessary, remove or install rocker switch cover plates.

INSTALLATION

(1) Position the bezel on the upper instrument panel and engage it with the U-clips.

(2) Install the bezel retaining screws. Tighten the screws with 1 N·m (11 in-lbs) torque.

For service procedures regarding individual I/P components refer to Group 8, Electrical.

I/P ASH RECEIVER TRAY LAMP—XJ

REMOVAL

(1) Remove the ash receiver tray from instrument panel (Fig. 2).

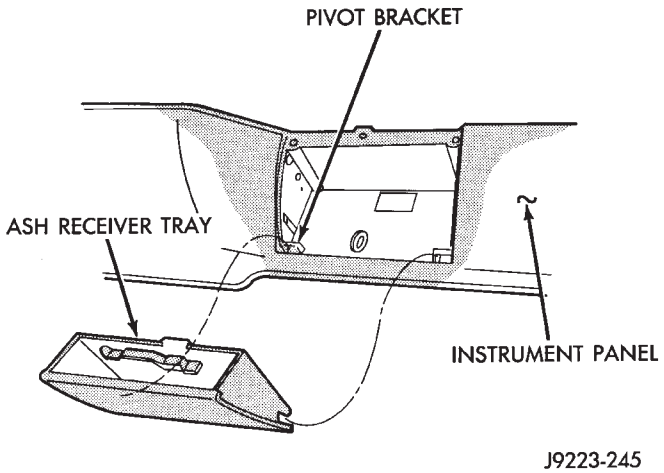

Fig. 2 Ash Receiver Tray

(2) Remove the lamp retaining screw from the ash receiver tray cavity (Fig. 3).

(3) Disconnect the lamp wire harness connector and remove the lamp from the instrument panel.

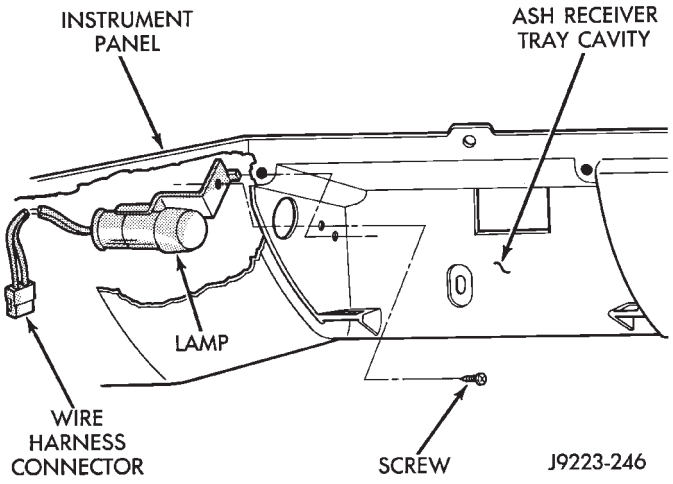

Fig. 3 Ash Receiver Tray Lamp

INSTALLATION

(1) Position the lamp under the instrument panel and connect the lamp wire harness connector.

(2) Install the lamp retaining screw in the ash receiver tray cavity.

(3) Install the ash receiver tray in the instrument panel.

FRONT BUCKET SEATS—XJ

REMOVAL

Bucket seat platforms are attached to the floor panel with bolts (Fig. 1).

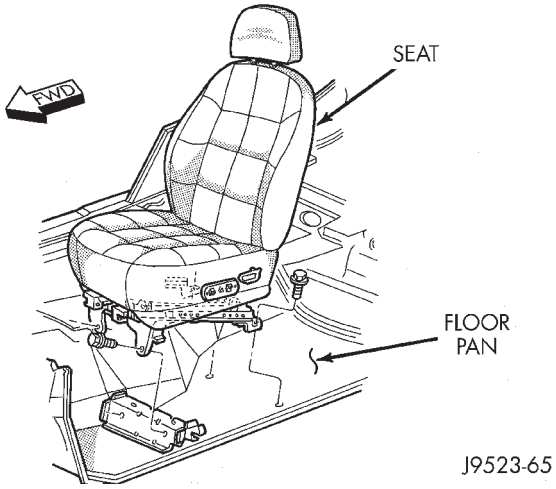

Fig. 1 Bucket Seat

(1) Remove seat frame bolts.

(2) For power seats, disconnect wire harness connector.

(3) Separate seat from floor panel.

INSTALLATION

(1) Position seat on floor panel.

(2) Install seat frame bolts. Tighten to 32 N·m (24 ft-lbs) torque.

(3) For power seats, connect wire harness connector.

BUCKET SEAT CUSHION AND COVER—XJ

REMOVAL

(1) Remove the seat from vehicle (Fig. 1). If necessary, refer to removal procedure.

(2) Remove seat trim cover.

(3) Remove wire support rod and rear carpet seat track cover, and flap retainer.

(4) For power seats, remove control housing from seat cushion.

(5) Unclip skirt from seat cushion and seat frame.

(6) Remove seat cushion cover retaining screws and wire rods from cushion cover. Remove cover from cushion frame.

INSTALLATION

(1) Install seat cushion cover on cushion frame. Install wire rods and retaining screws. Tighten screws to 2 N·m (13 in-lbs) torque.

(2) Install cushion and retaining screws on seat frame.

(3) Clip skirt onto seat cushion and seat frame.

(4) For power seats, install control housing on seat cushion. Tighten screws to 2 N·m (13 in-lbs) torque.

(5) Install rear carpet seat track cover and support rod and flap retainer.

(6) Install seat trim cover and screws onto seat platform.

(7) Install seat in vehicle (Fig. 1). If necessary, refer to removal procedure.

BUCKET SEATBACK COVER AND FRAME—XJ

REMOVAL

(1) Remove seat from vehicle. If necessary, refer to removal procedure.

(2) Remove seat cushion from frame. If necessary, refer to removal procedure.

(3) If equipped, remove headrest. Twist knob under headrest and pull up and out of cylinders in seatback.

(4) Remove headrest latch release lever bezel from seatback.

(5) Squeeze plastic retainers together. Detach lower flap from front of cover.

(6) Remove cover retainer clips and remove cover from seatback.

(7) For power seats, remove retaining screws and remove the seat control from seat track/platform.

(8) Remove retaining screws and nuts. Remove seat frame from seat track/platform.

INSTALLATION

(1) Position seat frame on seat track/platform. Install retaining screws and nuts.

(2) For power seats, position seat control on seat track/platform. Install retaining screws. Tighten screws securely.

(3) Position cover on seatback. Install cover retainer clips.

(4) Attach cover bottom elastic band or attach Velcro flap to front of cover.

(5) Install seatback insert.

(6) Install headrest latch release lever bezel.

(7) Install headrest by pushing it down into seatback cylinders.

(8) Install cushion on frame. If necessary, refer to installation procedure.

(9) Install seat in the vehicle. If necessary, refer to the installation procedure.

(10) For power seats, test seat operation.

BUCKET SEAT PLATFORM—XJ

REPLACEMENT

Bucket seat platforms are not repairable. If the seat platform is damaged, replace platform as a unit.

REAR SEAT CUSHION—XJ

REMOVAL

(1) Disengage the seat cushion at the rear by pulling upward on the release strap (Fig. 1).

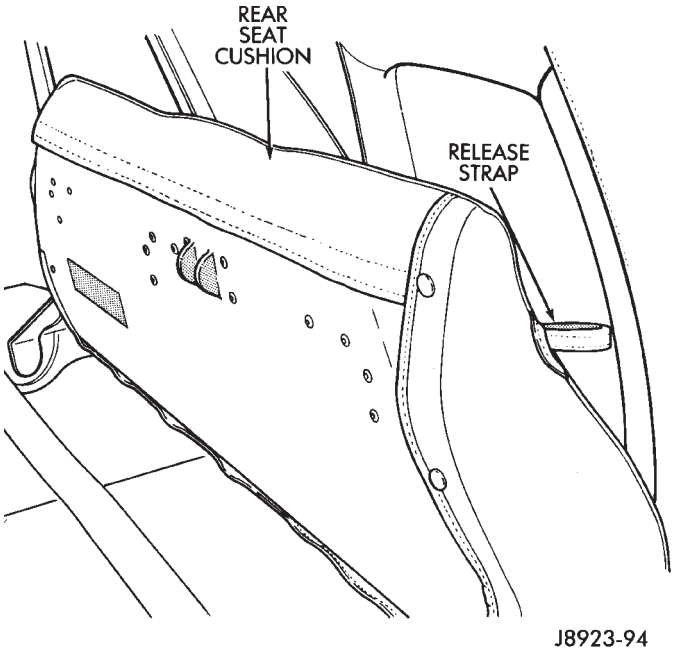

Fig. 1 Seat Cushion Disengagement At Rear

(2) Tilt the seat cushion forward.

(3) Disengage the seat cushion latch with the release lever (Fig. 2 and 3). Separate the right side latch and then the left side seat bracket from the floor anchor bolts, and remove the cushion from the vehicle.

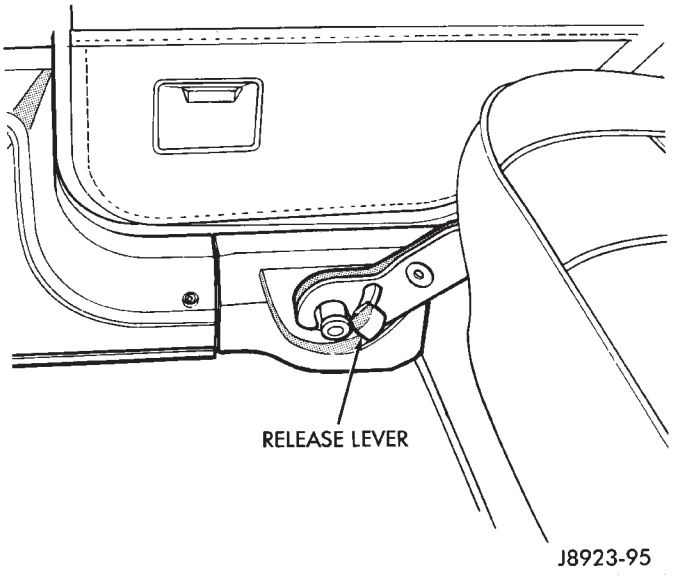

Fig. 2 Seat Cushion Disengagement At Front

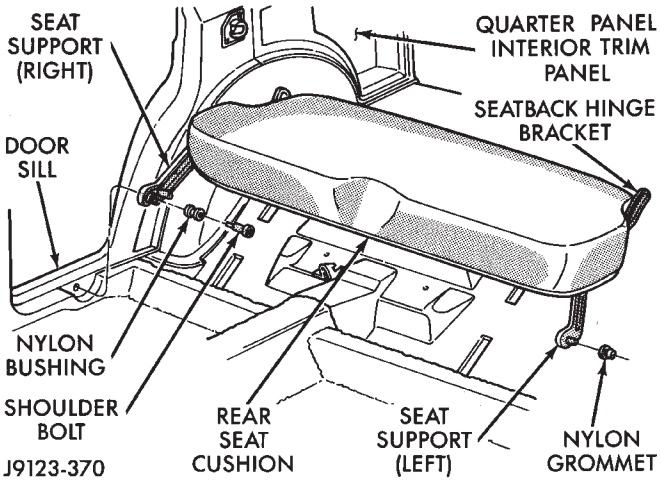

Fig. 3 Rear Seat Cushion Removal/Installation

INSTALLATION

(1) Position the seat cushion in the vehicle (Fig. 3).

(2) Insert the left pivot in the anchor grommet.

(3) Force the right side latch onto the anchor bolt and pivot the seat cushion to the horizontal position.

(4) Lock the seat cushion in-place by pressing firmly on the center of the cushion until the latch engages.

REAR SEAT CUSHION COVER—XJ

REMOVAL

(1) Remove the seat cushion from the vehicle.

(2) Remove the cover side, front and rear retaining clips from the wire retainers with an appropriate removal tool (Fig. 4).

(3) Remove the serrated retainers from the front ends of the cover with a trim panel removal tool (Fig. 5).

(4) Remove the seat cover from the cushion.

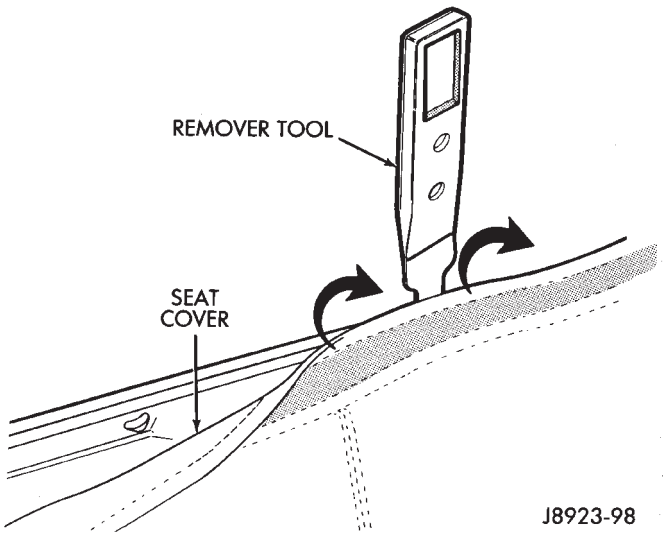

Fig. 4 Seat Cushion Cover Retaining Clip Removal

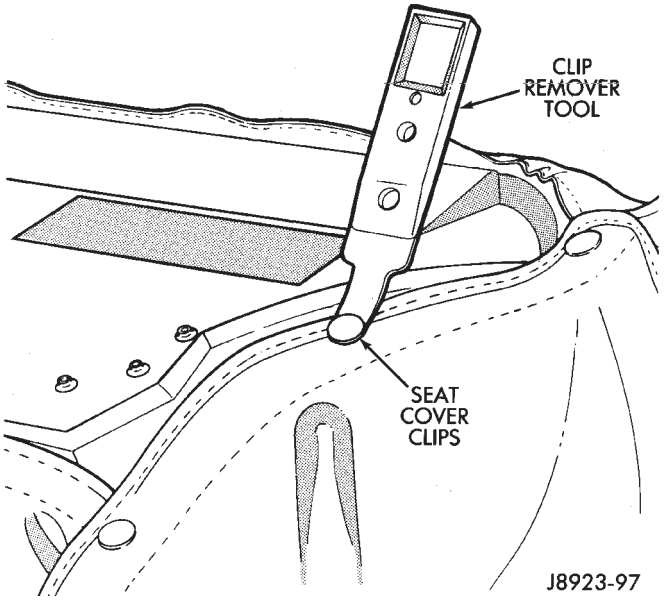

Fig. 5 Seat Cushion Cover Retaining Clip Removal

INSTALLATION

(1) Position the replacement cover on the cushion.

(2) Compress the cover and attach the retaining clips to the front and rear wire retainers.

(3) Install the serrated retainers at the ends of the cover.

(4) Install the seat cushion in the vehicle. If necessary, refer to the installation procedure.

REAR SEATBACK—XJ

REMOVAL

(1) Disengage the seat cushion at the rear by pulling upward on the release strap (Fig. 6)

(2) Tilt the seat cushion forward.

(3) Remove the shoulder/lap belt buckles from the elastic straps.

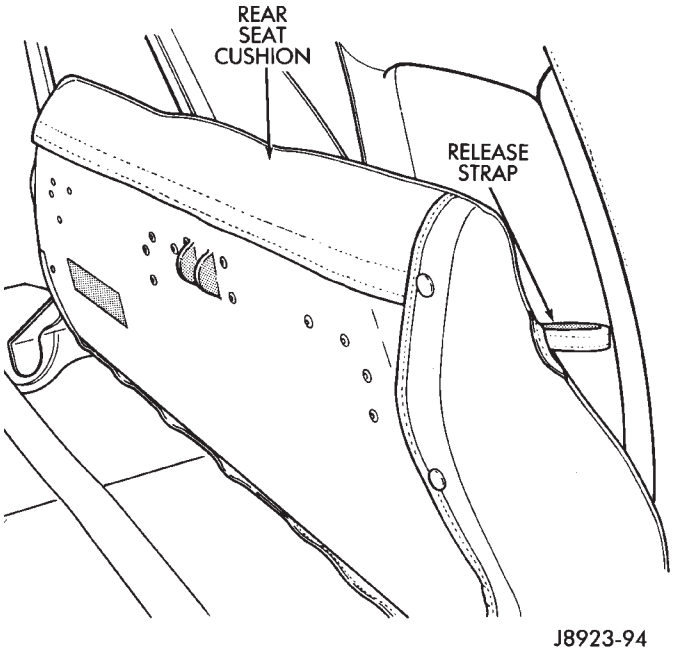

Fig. 6 Seat Cushion Disengagement

(4) Release the seatback latch from the striker.

(5) Remove the pivot bolts and the washers from the wheelhouse panel anchors (Fig. 7).

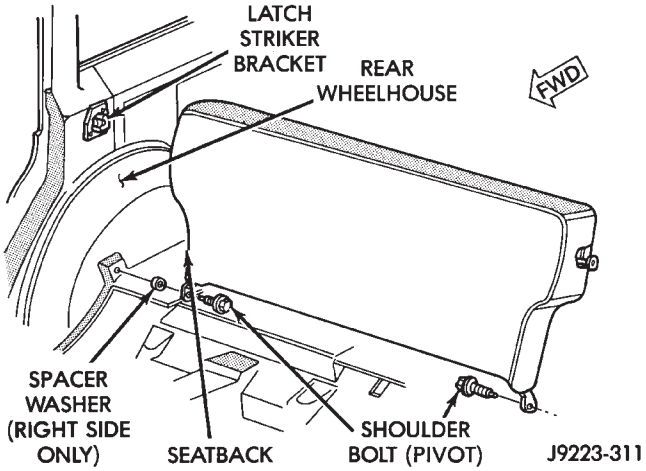

Fig. 7 Rear Seatback Removal/Installation

(6) Tilt the seatback forward, lift it upward and remove it from the vehicle.

INSTALLATION

(1) Position the seatback in the vehicle.

(2) Install the pivot bolts and the washer—right side only. Tighten the bolts with 45 N·m (33 ft-lbs) torque.

(3) Engage the seatback latch with the striker.

(4) Insert the shoulder/lap belt buckles in the elastic straps.

(5) Pivot the seat cushion to the horizontal position and lock the it in-place by pressing firmly on the center of the cushion until the latch engages.

REAR SEATBACK LATCH STRIKER AND BUMPER—XJ

REMOVAL

(1) Disengage the seat cushion at the rear by pulling upward on the release strap.

(2) Tilt the seat cushion forward.

(3) Release the seatback latch from the striker.

(4) Tilt the seatback forward for access to the striker bracket.

(5) Remove the retaining screws and the latch striker bracket from the trim panel (Fig. 8).

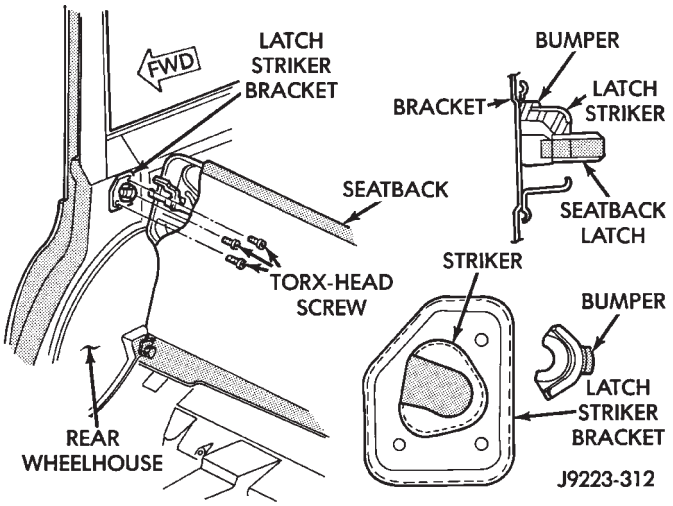

Fig. 8 Seatback Latch Striker Bracket Removal/Installation

INSTALLATION

(1) Position the latch striker bracket on the trim panel and install the retaining screws. Tighten the screws with 6 N·m (50 in-lbs) torque.

(2) Engage the seatback latch with the striker.

(3) Pivot the seat cushion to the horizontal position and lock the it in-place by pressing firmly on the center of the cushion until the latch engages.

REAR SEATBACK COVER—XJ

REMOVAL

(1) Remove the seatback from the vehicle.

(2) Remove the seatback latch release handle and bezel from the seatback.

(3) Disengage the cover zipper and J-rail retainer. Remove the cover from the seatback pad (Fig. 9).

INSTALLATION

(1) Install the replacement cover on the seatback.

(2) Attach the cover J-rail retainer clip to the frame/panel edge and engage the cover zipper.

(3) Install the seat latch release bezel and handle on the cover and pad.

(4) Install the seatback in the vehicle.

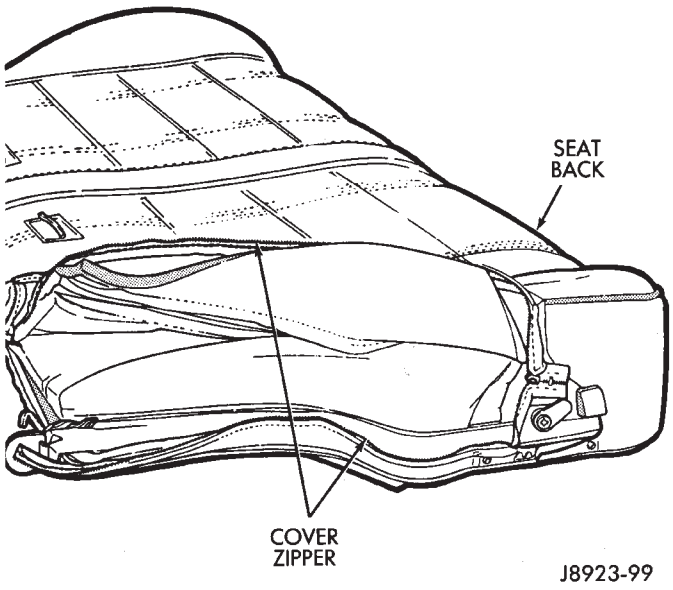

Fig. 9 Seatback Cover Removal

INTERIOR TRIM PANELS AND SCUFF PLATES—XJ

The XJ interior trim panels, moldings and inner scuff plate are illustrated in Figures 1 and 2. Most of the components are attached with either push-in screws or Phillips-head screws. Retainer clips are used to attach the rear quarter trim panels.

CAUTION: Do not remove trim panels/moldings without first removing the overlapping panels, interior lamps, and other components. To avoid damaging the panels, ensure that all the screws and clips are removed before attempting to remove a trim panel/molding.

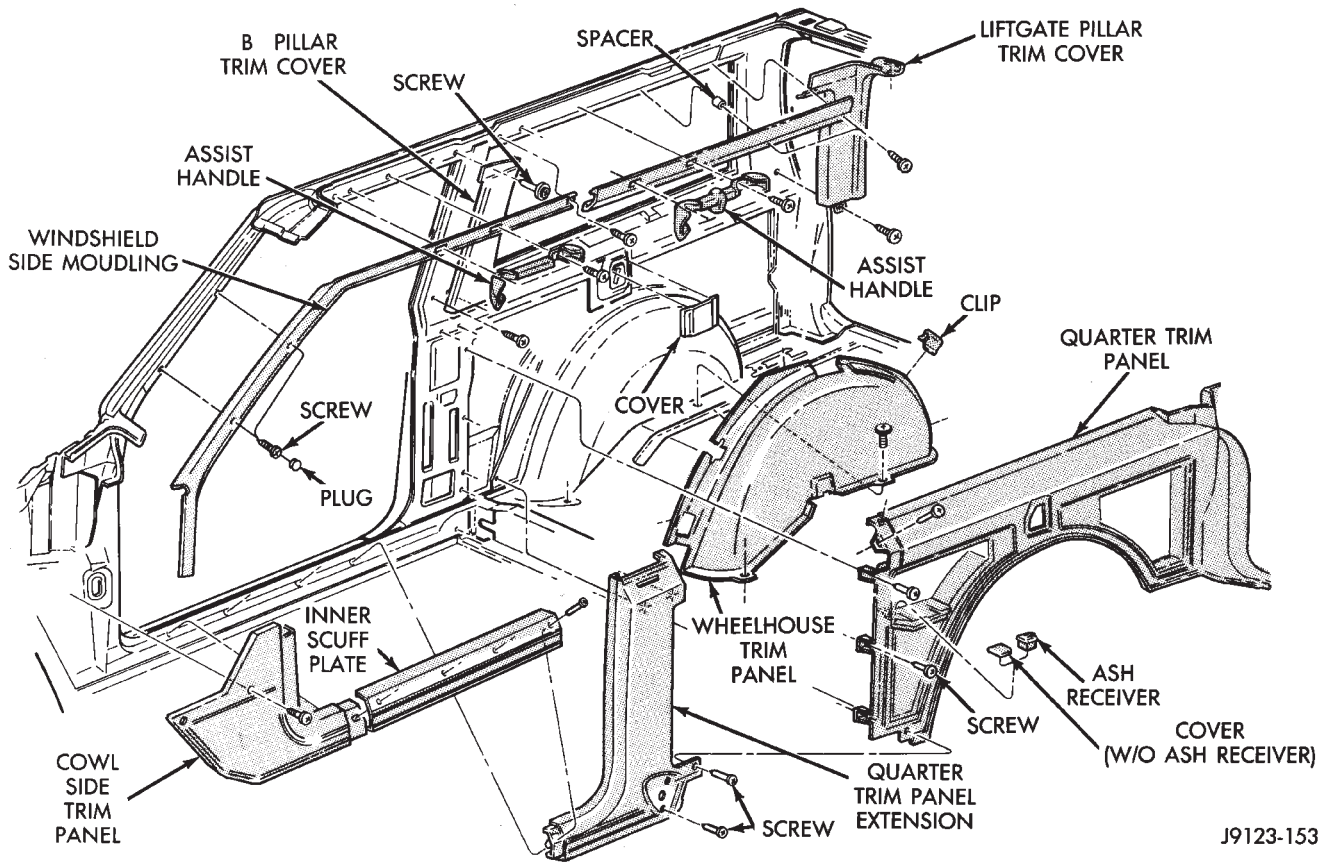

Fig. 1 Interior Trim Panels/Moldings/Scuff Plate—XJ 2-Door Vehicles

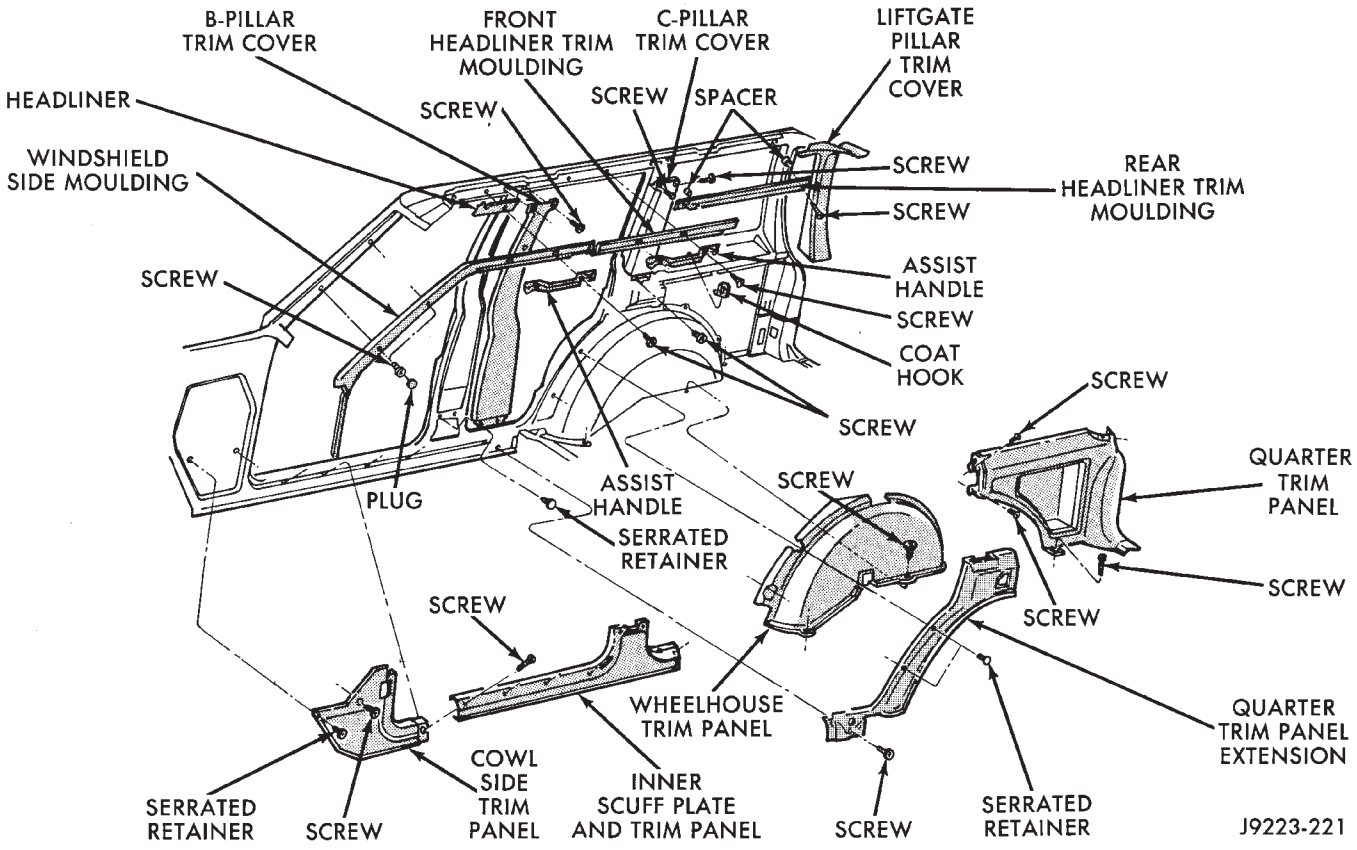

Fig. 2 Interior Trim Panels/Moldings/Scuff Plate—XJ 4-Door Vehicles

FRONT INNER SCUFF PLATE/COWL SIDE TRIM PANEL—XJ

REMOVAL

(1) Remove the retaining screws and the inner scuff plate from the front door sill (Fig. 3 and 4).

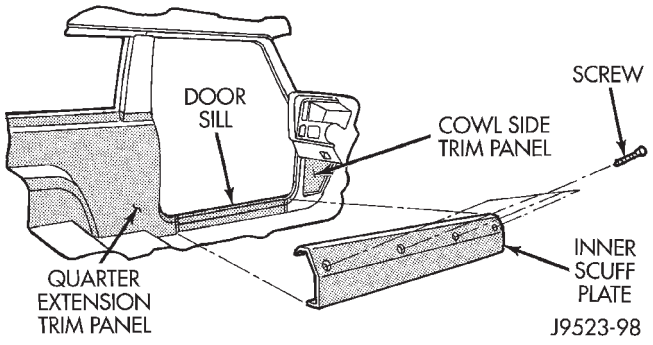

Fig. 3 Front Inner Scuff Plate—2-Door Vehicles

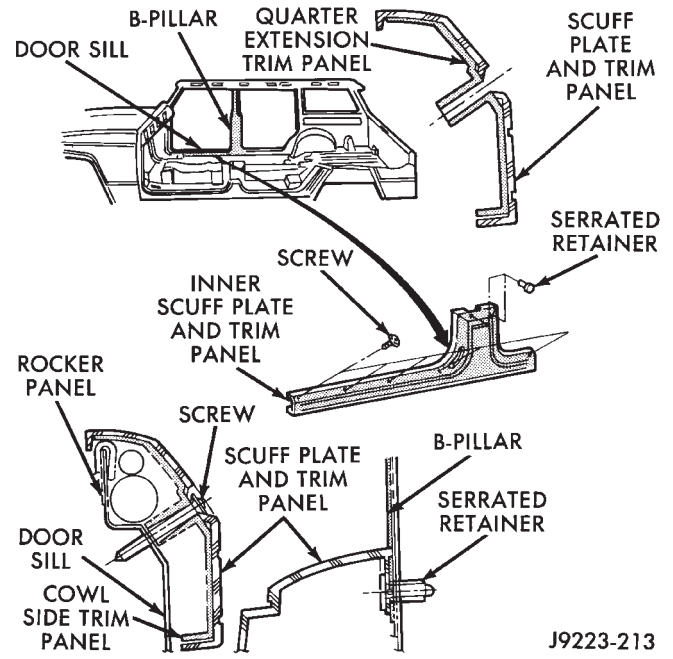

Fig. 4 Front Inner Scuff Plate—4-Door Vehicles

(2) Remove the retaining screws and cowl side trim panel from the cowl side panel (Fig. 5).

INSTALLATION

(1) Position the cowl side trim panel on the cowl side panel and install the retaining screws. Tighten the screws to 1 N·m (11 in-lbs) torque.

(2) Position the inner scuff plate on the front door sill and install the retaining screws. Tighten the screws to 1 N·m (11 in-lbs) torque.

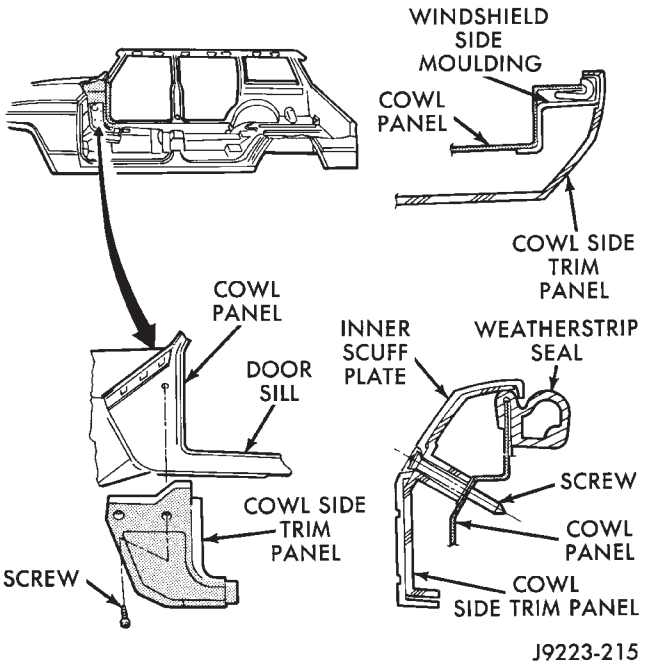

Fig. 5 Cowl Side Trim Panel

WINDSHIELD SIDE MOLDING—XJ

REMOVAL

(1) Remove the retaining screws and the inner scuff plate, cowl side trim panel and headliner front trim molding from the interior of the vehicle.

(2) Remove the retaining screws and the windshield side molding from the A-pillar and door header (Fig. 6).

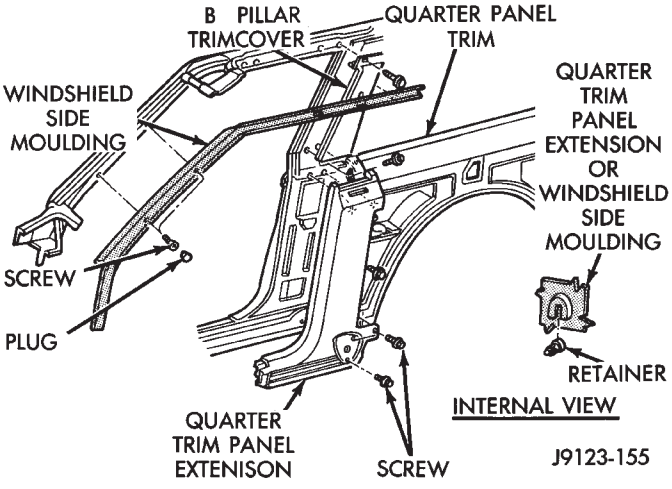

Fig. 6 Windshield Side Molding, Quarter Trim and Extension Panels

INSTALLATION

(1) Position the windshield side molding on the A-pillar and door header. Install the retaining screws and tighten to 1 N·m (11 in-lbs) torque.

(2) Install the headliner front trim molding, the cowl side trim panel and the inner scuff plate in the interior of the vehicle. Tighten the retaining screw to 1 N·m (11 in-lbs) torque.

QUARTER TRIM PANEL EXTENSION—XJ

REMOVAL

(1) Remove the retaining screws and the inner scuff plate from the door sill.

(2) Remove the retaining screws and serrated retainers, and remove the panel extension from the wheelhouse and quarter trim panels (Fig. 7).

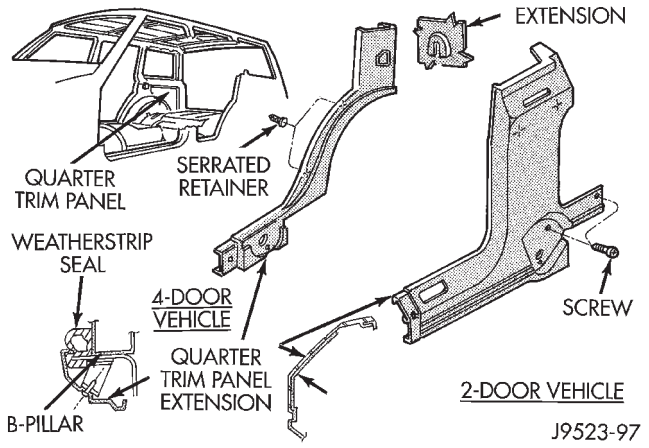

Fig. 7 Quarter Trim Panel Extension

INSTALLATION

(1) Position the quarter trim panel extension on the wheelhouse and quarter trim panels. Install the serrated retainers and retaining screws. Tighten the screws to 1 N·m (11 in-lbs) torque.

(2) Position the inner scuff plate on the door sill. Install the retaining screws and tighten to 1 N·m (11 in-lbs) torque.

QUARTER AND WHEELHOUSE TRIM PANELS—XJ

REMOVAL

(1) Remove the retaining screws and the inner scuff plate from the door sill.

(2) Remove the retaining screws and serrated retainers, and remove the panel extension from the wheelhouse and quarter trim panels.

(3) Remove the retaining screws, and the liftgate scuff plate and latch striker from the carpet and cross sill (Fig. 8).

(4) Remove the retaining screws and the quarter trim panel from the quarter panel and wheelhouse trim panel (Fig. 9 and 10).

(5) If necessary, remove the retaining screws and the tire stand-off from the left quarter trim panel (Fig. 11).

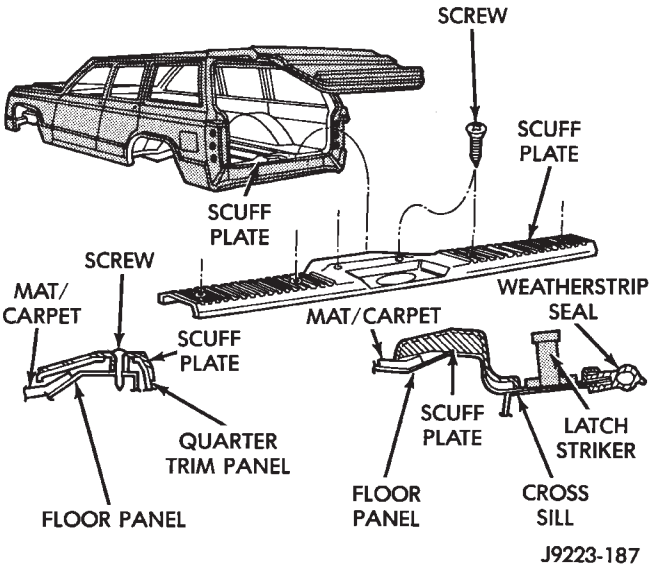

Fig. 8 Liftgate Scuff Plate

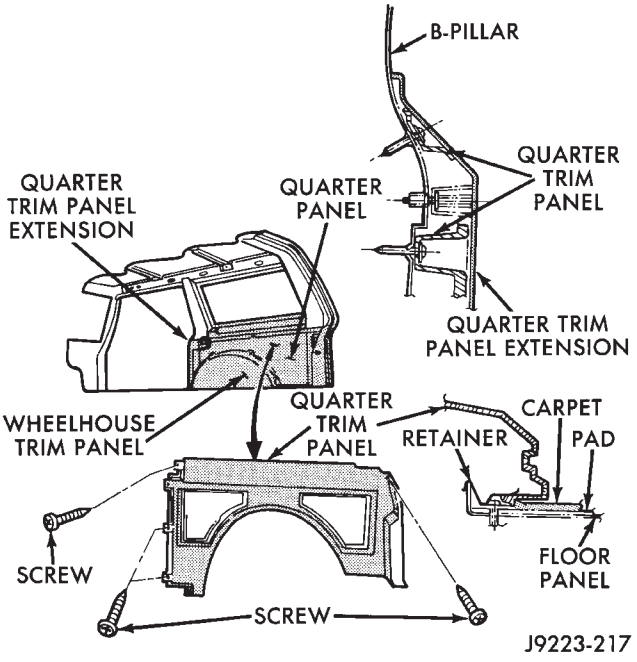

Fig. 9 Quarter Trim Panel—2-Door Vehicles

(6) If necessary, remove the ash receiver/cover plate from the quarter trim panel.

(7) Remove the retaining screws and U-clip retainers, and remove the wheelhouse trim panel from the quarter panel.

INSTALLATION

(1) Position the wheelhouse trim panel on the quarter panel and install the retaining screws and U-clip retainers. Tighten the screws to 1 N·m (11 in-lbs) torque.

(2) If removed, install the tire stand-off on the left quarter trim panel. Tighten the retaining screws to 1 N·m (11 in-lbs) torque.

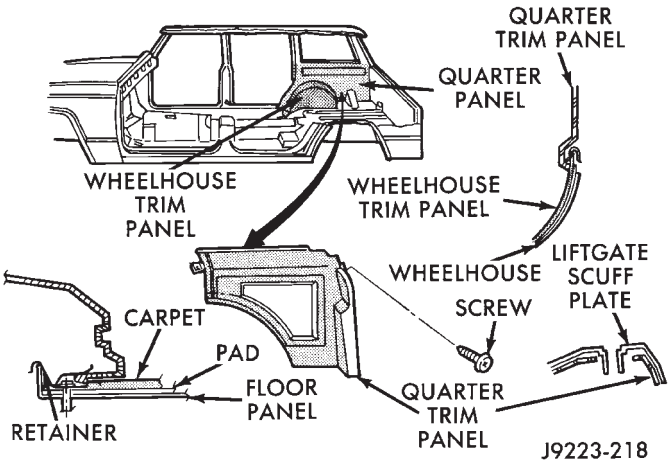

Fig. 10 Quarter Trim Panel—4-Door Vehicles

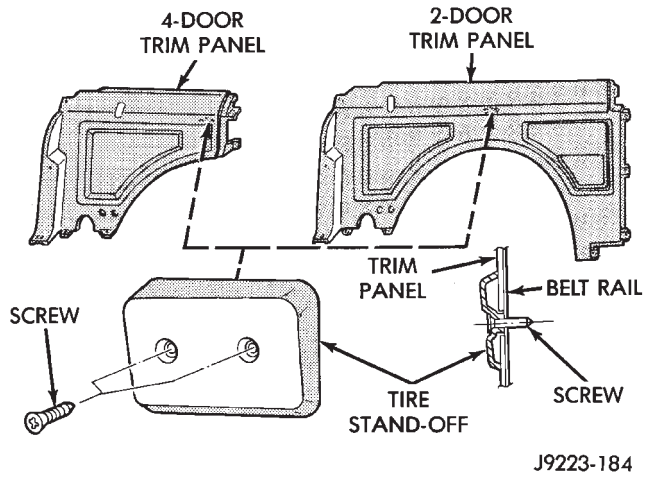

Fig. 11 Tire Stand-Off—Left Quarter Trim Panel

(3) If removed, install the ash receiver/cover plate on the quarter trim panel.

(4) Position the quarter trim panel on the quarter panel and wheelhouse trim panel. Install and tighten the retaining screws to 1 N·m (11 in-lbs) torque.

(5) Position scuff plate and latch striker on the carpet and cross sill, and install the retaining screws.Tighten the scuff plate screws to 1 N·m (11 in-lbs) torque. Tighten the latch striker screws to 30 N·m (22 ft-lbs) torque.

(6) Position the quarter trim panel extension on the wheelhouse and quarter trim panels. Install the serrated retainers and retaining screws. Tighten the screws to 1 N·m (11 in-lbs) torque.

(7) Position the inner scuff plate on the door sill. Install the retaining screws and tighten to 1 N·m (11 in-lbs) torque.

B/C-PILLAR AND LIFTGATE PILLAR TRIM COVERS—XJ

REMOVAL

(1) Remove the retaining screws and the inner scuff plate from the door sill.

(2) Remove the cowl side trim panel, the headliner trim molding and the windshield side molding from the interior of the vehicle (Fig. 12).

(3) For 4-door vehicles, remove the retaining screws and remove the trim cover from the B-pillar (Fig. 13).

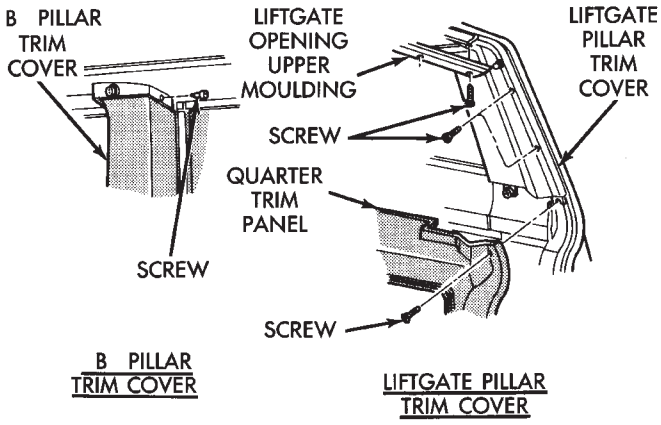

Fig. 12 B-Pillar and Liftgate Pillar Trim Covers

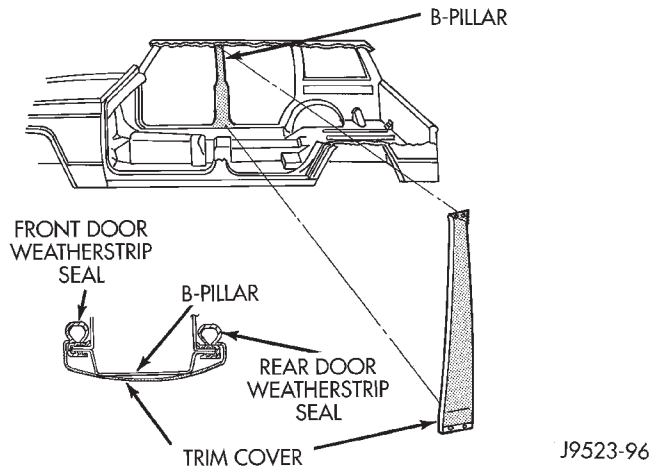

Fig. 13 B-Pillar Trim Cover—4-Door Vehicles

(4) Remove the retaining screws and serrated retainers, and remove the panel extension from the wheelhouse and quarter trim panels.

(5) For 2-door vehicles, remove the retaining screws and remove the trim cover from the B-pillar (Fig. 14).

(6) For 4-door vehicles, remove the retaining screws and remove the trim cover from the C-pillar (Fig. 15).

(7) Remove the retaining screws, and the liftgate scuff plate and latch striker from the carpet and cross sill.

(8) Remove the retaining screws and the quarter trim panel from the quarter panel and wheelhouse trim panel.

(9) Remove the retaining screws and the liftgate upper trim molding from the liftgate header.

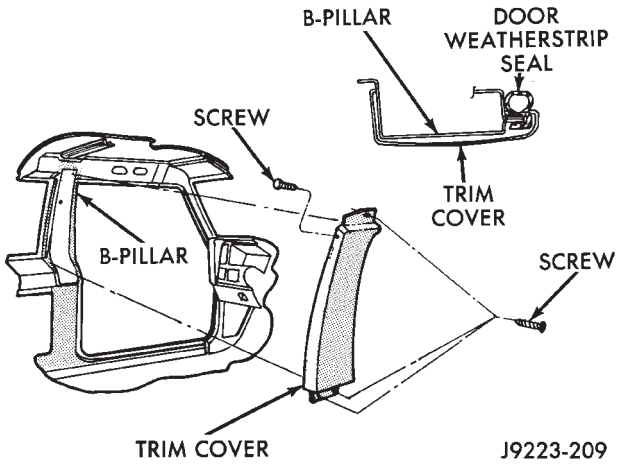

Fig. 14 B-Pillar Trim Cover—2-Door Vehicles

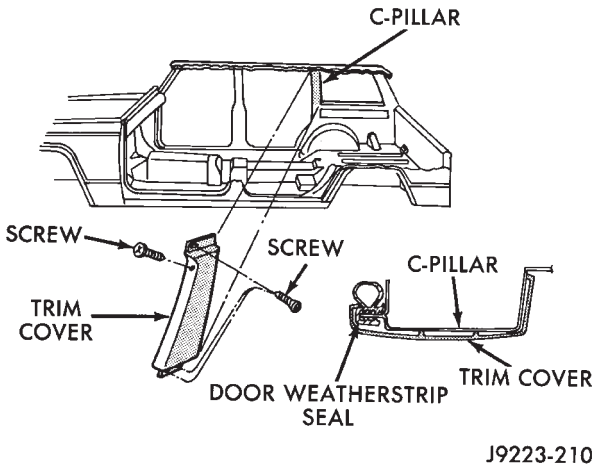

Fig. 15 C-Pillar Trim Cover—4-Door Vehicles

(10) Remove the retaining screws and the trim cover from the liftgate pillar (Fig. 16).

INSTALLATION

(1) Position the trim cover on the liftgate pillar and install the retaining screws. Tighten the screws to 1 N·m (11 in-lbs) torque.

(2) Position the upper trim molding on the liftgate header and install the retaining screws. Tighten the screws to 1 N·m (11 in-lbs) torque.

(3) Position the quarter trim panel on the quarter panel and wheelhouse trim panel. Install and tighten the retaining screws to 1 N·m (11 in-lbs) torque.

(4) Position the scuff plate and latch striker on the carpet and cross sill, and install the retaining screws. Tighten the scuff plate screws to 1 N·m (11 in-lbs) torque. Tighten the latch striker screws to 30 N·m (22 ft-lbs) torque.

(5) For 4-door vehicles, position the trim cover on the C-pillar and install the retaining screws. Tighten the screws to 1 N·m (11 in-lbs) torque.

(6) For 2-door vehicles, position the trim cover on the B-pillar and install the retaining screws. Tighten the screws to 1 N·m (11 in-lbs) torque.

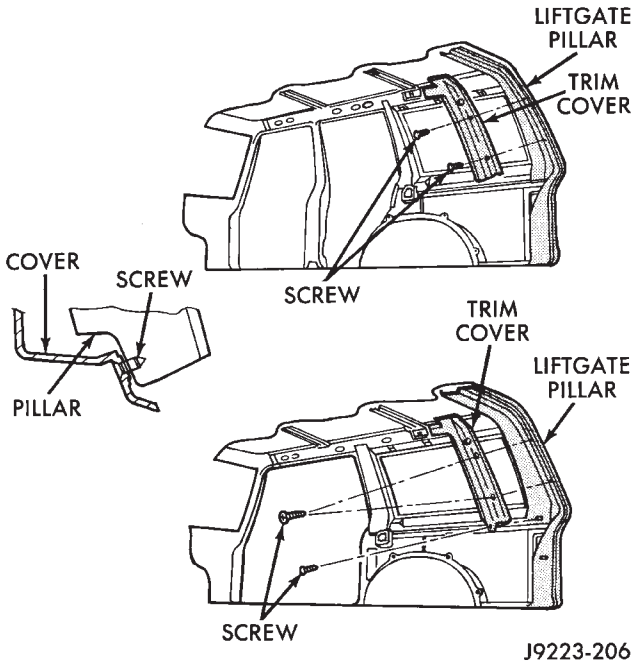

Fig. 16 Liftgate Pillar Trim Cover

(7) Position the quarter trim panel extension on the wheelhouse and quarter trim panels. Install the serrated retainers and retaining screws. Tighten the screws to 1 N·m (11 in-lbs) torque.

(8) For 4-door vehicles, position the trim cover on the B-pillar. Install the retaining screws and tighten to 1 N·m (11 in-lbs) torque.

(9) Install the windshield side molding, the headliner trim molding and the cowl side trim panel in the interior of the vehicle. Tighten the screws to 1 N·m (11 in-lbs) torque.

(10) Position the inner scuff plate on the door sill. Install the retaining screws and tighten to 1 N·m (11 in-lbs) torque.

OUTER SCUFF PLATES—XJ

REMOVAL/INSTALLATION

The door sill outer and the liftgate scuff plates are attached to the sills with screws (Fig. 17 and 18). Refer to Liftgate for latch striker information.

ASSIST HANDLE—XJ

XJ assist handles are attached to the:

- Windshield side trim molding.
- A-pillar and door header trim molding.
- Upper (headliner) trim moldings with screws that concealed by the handle end covers (Fig. 19).

REMOVAL

(1) Open the end covers that conceal the assist handle retaining screws.

(2) Remove the handle retaining screws.

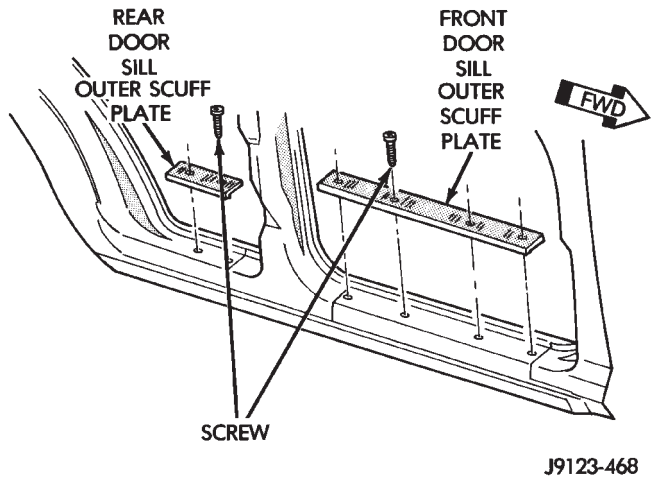

Fig. 17 Outer Scuff Plates—4-Door Vehicles

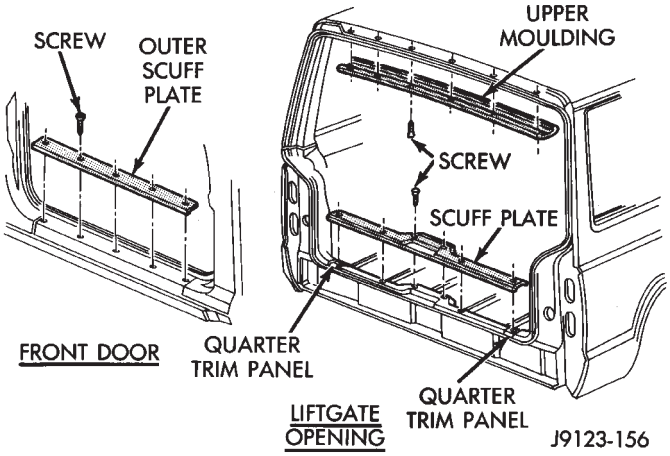

Fig. 18 Liftgate and Door Sill Outer Scuff Plate

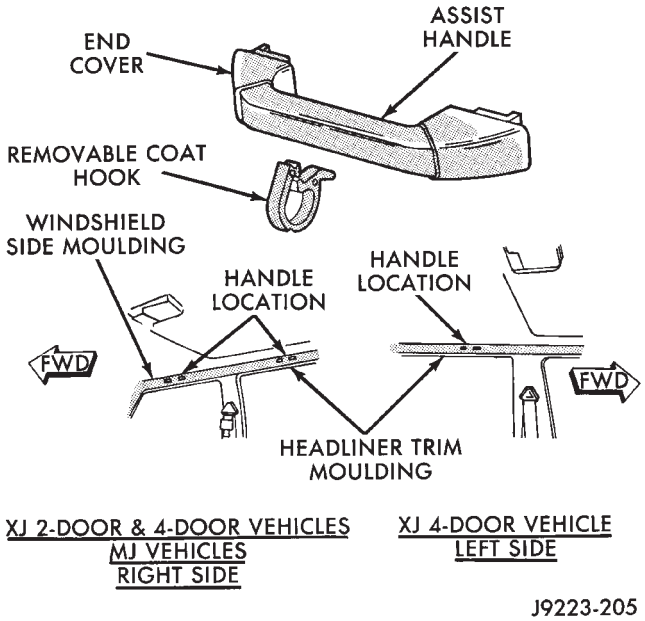

Fig. 19 Assist Handles—XJ Vehicles

(3) Remove the assist handle from the trim molding.

INSTALLATION

(1) Position the handle on the trim molding and install the retaining screws. Tighten the retaining screws to 3 N·m (22 in-lbs) torque.

(2) Install the covers over the retaining screws.

FRONT SHOULDER BELT/BUCKLE—XJ

REMOVAL

(1) Slide the front seats all the way forward for access to the belt anchor bolt.

(2) Disconnect the belt wire harness connector (Fig. 1).

(3) Remove the anchor bolt cover.

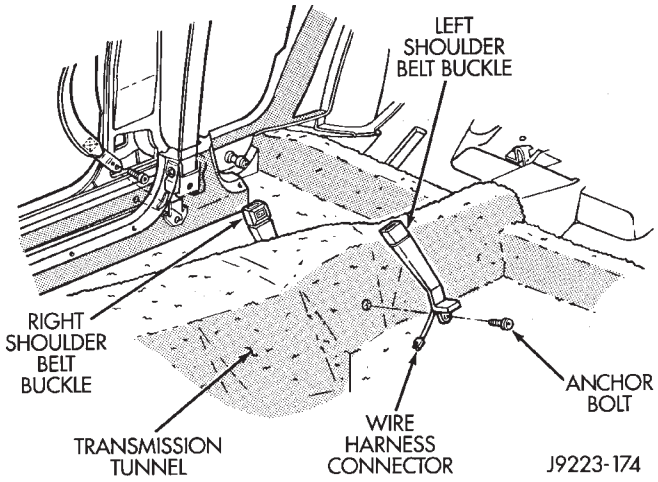

Fig. 1 Front Shoulder Belt Buckles

(4) Remove the shoulder belt buckle anchor bolt with a Torx bit.

(5) Remove the shoulder belt buckle from the transmission tunnel.

(6) Remove the cap concealing the shoulder belt upper anchor bolt (Fig. 2 and 3).

(7) Use a Torx bit to remove the upper anchor bolt. Remove the support/guide washer.

(8) Remove the inner scuff plate/trim panel from the door sill and remove the shoulder belt lower anchor bolt(s) with a Torx bit.

(9) Remove the shoulder belt and the retractor.

INSPECTION

Inspect the front shoulder belts and buckles. Replace any belt that is either cut, frayed, torn or damaged in any way. Replace the shoulder belt if the retractor is damaged or inoperative.

INSTALLATION

(1) Position the shoulder belt retractor in the shield and install the lower anchor bolt with a Torx bit.

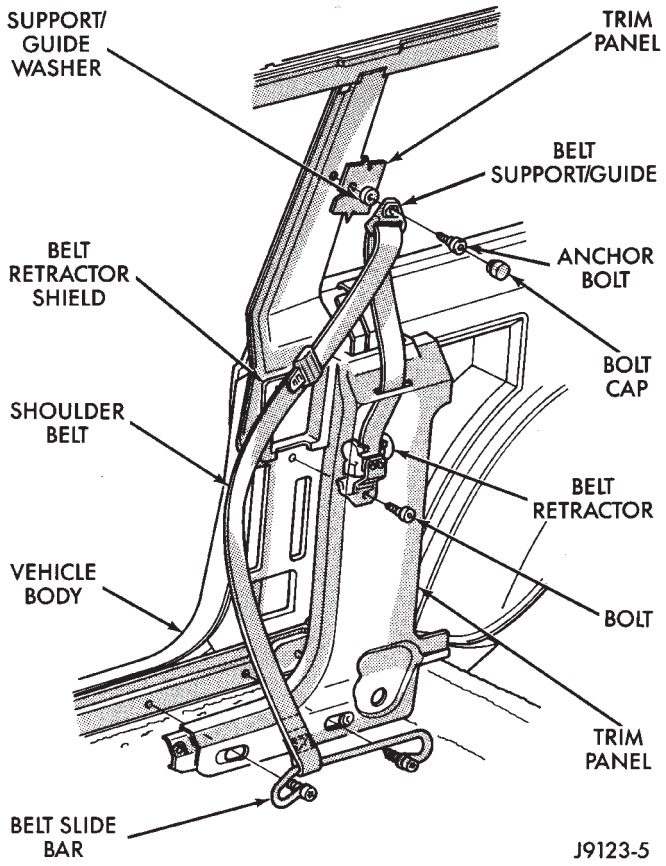

Fig. 2 Front Shoulder Belt—2-Door Vehicles

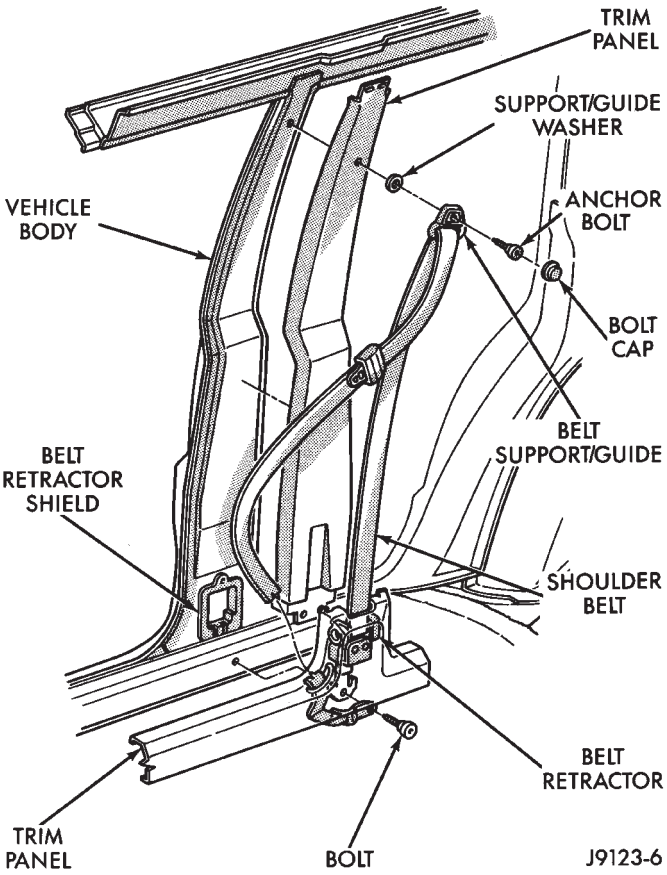

Fig. 3 Front Shoulder Belt—4-Door Vehicles

(2) Position the support/guide washer and shoulder belt upper anchor plate on the trim panel. Install the upper anchor bolt with a Torx bit.

(3) Tighten the upper and lower anchor bolts to 41 N·m (30 ft-lbs) torque.

(4) Install the door sill inner scuff plate/trim panel and install the cap over the upper anchor bolt.

(5) Install the shoulder belt buckle and anchor bolt. Connect the wire harness connectors. Tighten the buckle anchor bolt to 41 N·m (30 ft-lbs) torque.

(6) Position the cover over the anchor bolt.

REAR SHOULDER/LAP BELT/BUCKLE—XJ

REMOVAL

(1) Pull the rear seat release strap and tilt the complete seat forward.

(2) Remove the shoulder belt buckle and lap belt/buckle anchor plate bolts from the floor panel (Fig. 4).

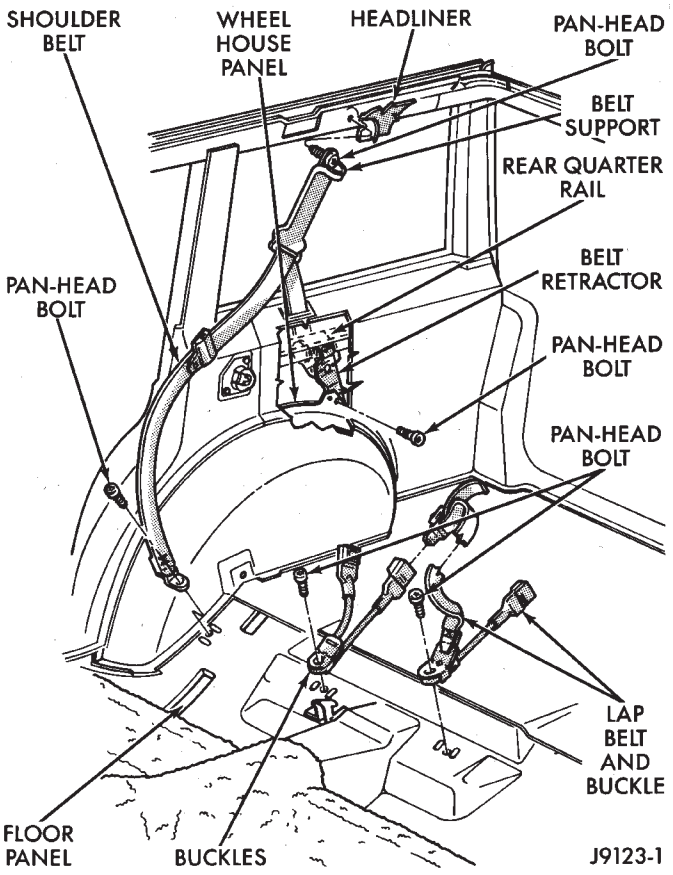

Fig. 4 Rear Seat Shoulder/Lap Belts and Buckles

(3) Remove the shoulder belt lower anchor bolt.

(4) Remove the quarter trim panel. If necessary, refer to the removal procedure.

(5) Remove the shoulder belt upper anchor bolt.

(6) Remove the belt retractor support retaining screw from the rear quarter rail (Fig. 5).

(7) Remove the retractor and shoulder belt from the trim panel.

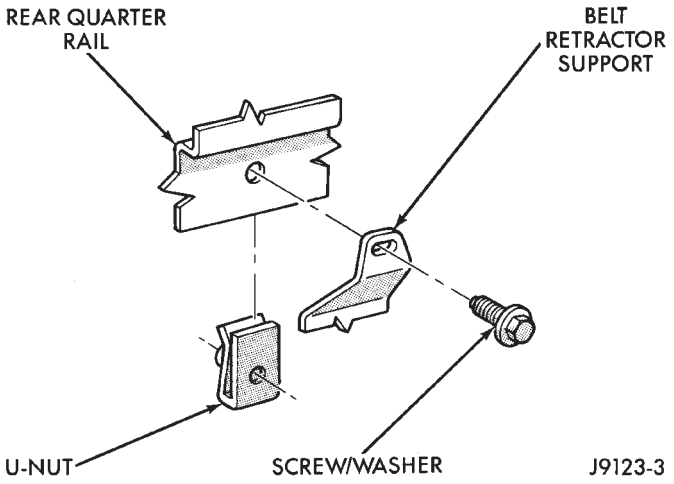

Fig. 5 Shoulder Belt Retractor Support Removal/ Installation

INSPECTION

Inspect the rear shoulder/lap belts and buckles. Replace any belt that is either cut, frayed, torn or damaged in any way. Replace the shoulder belt if the retractor is damaged or inoperative.

INSTALLATION

(1) Position the shoulder belt buckle and the lap belt/buckle anchor plates on the floor panel.

(2) Install the anchor bolts. Tighten the bolts to 37 N·m (27 ft-lbs) torque.

(3) Position the shoulder belt at the roof rail and install the upper anchor bolt. Tighten the bolt to 37 N·m (27 ft-lbs) torque.

(4) Route the shoulder belt through the quarter trim panel slot. Install the retractor support on the rear quarter rail. Tighten the screw to 5 N·m (45 in-lbs) torque.

(5) Install the quarter trim panel.

(6) Install the shoulder belt lower anchor bolt. Tighten the bolt to 37 N·m (27 ft-lbs) torque.

(7) Return the rear seat to the normal position and engage the latch.

HEADLINER—XJ

The upper trim moldings and the headliner are attached to the roof rail with a combination of screws, velcro strips, clip retainers and rail retainers (Fig. 1).

To remove a headliner, all of the upper trim moldings must be removed from the perimeter of the headliner along with (as applicable):

- Assist handles.
- Sunvisors.
- Dome/cargo lamps.
- Overhead console.
- Keyless entry receiver module.
- Sound bar.
- All other attached/overlapping components.

Refer to the appropriate removal and installation procedure locate in this section or in Group 8, Electrical.

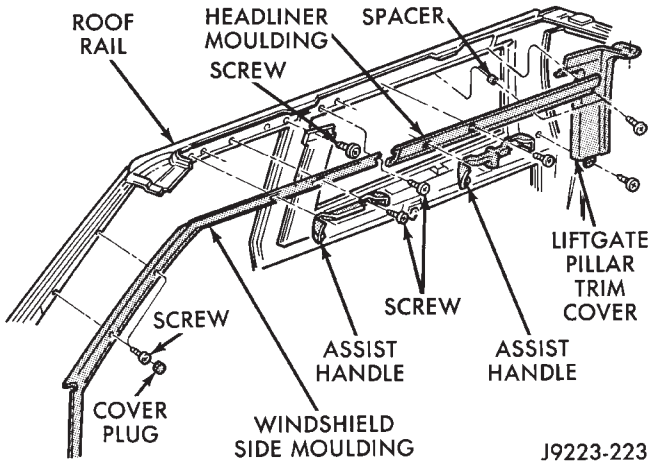

Fig. 1 Headliner Trim Moldings

REMOVAL

CAUTION: The headliner is a one-piece, molded component. It has limited flexibility and must not be bent during removal/installation.

(1) Remove the upper trim moldings from the perimeter of the headliner (Fig. 2 and 3).

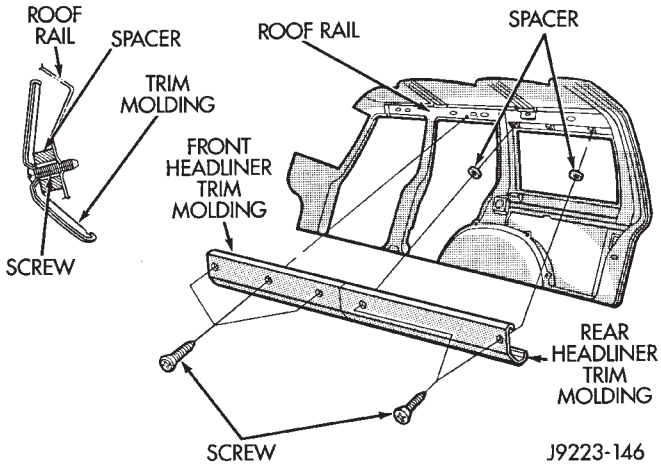

Fig. 2 Upper Trim Molding—4-Door XJ Vehicles

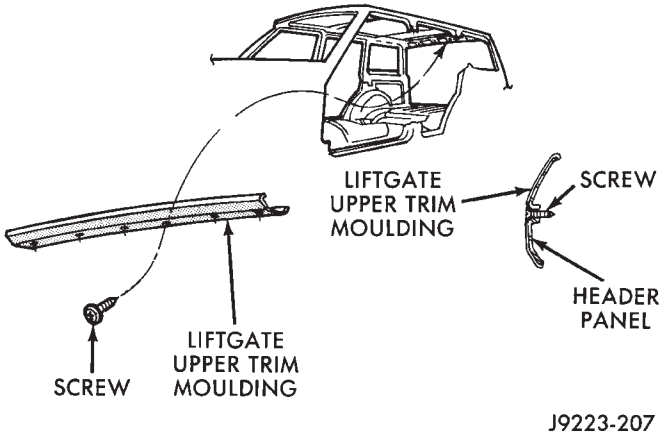

Fig. 3 Liftgate Trim Molding

(2) Ensure that all the retainer clips, screws and Velcro strips are disengaged before removing the headliner.

HEADLINER INSTALLATION

(1) When installing a headliner, ensure that the retainer clips and rails are installed (Fig. 4 and 5).

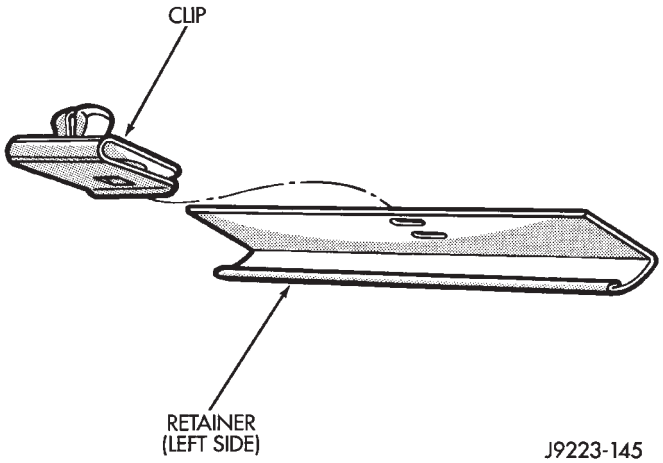

Fig. 4 Headliner Retainer Clip and Retainer Rail

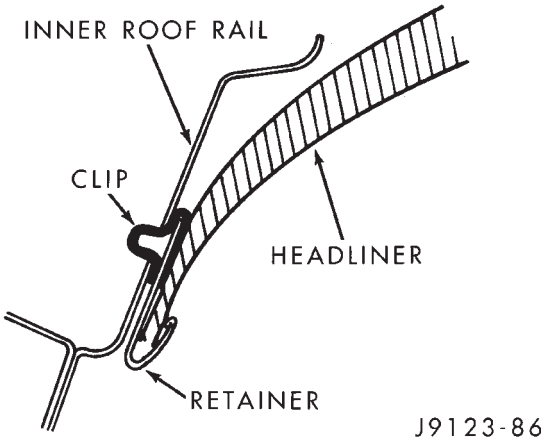

Fig. 5 Headliner Correctly Installed

(2) Install the upper trim moldings around the perimeter of the headliner. Tighten the retaining screws to 1 N·m (11 in-lbs) torque.

(3) As applicable, install:

- Assist handles.
- Sunvisors.
- Dome/cargo lamps.
- Overhead console.
- Keyless entry receiver module.
- Sound bar.
- All other attached/overlapping components.

DOME LAMP—XJ

REMOVAL

(1) Remove the dome lamp lens by squeezing both sides to release the retaining clips. Pull downward to remove the lens.

(2) Remove the speed nuts (Fig. 6).

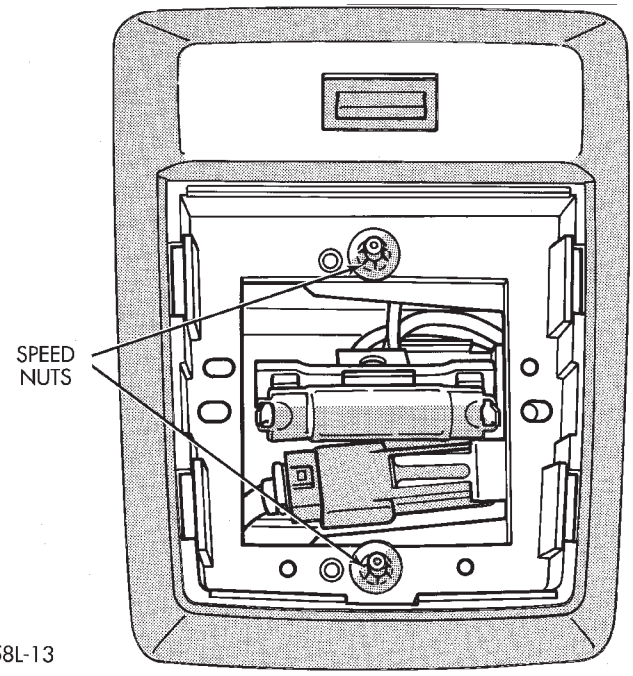

Fig. 6 Dome Lamp

(3) Disconnect the wire harness connector.

(4) Remove the lamp from the headliner.

INSTALLATION

(1) Connect the dome lamp wire harness connector.

(2) Position the dome lamp in the headliner hole and install the speed nuts.

(3) Install the dome lamp lens.

OVERHEAD CONSOLE—XJ

Refer to Group 8C, Overhead Console for removal and installation procedure.

KEYLESS ENTRY RECEIVER—XJ

Refer to Group 8P, Keyless Entry for removal and installation procedure.

SUNVISORS—XJ

REMOVAL

(1) Remove the screws that attach the sunvisor arm support bracket to the headliner and the roof panel (Fig. 7).

(2) Detach the sunvisor from the support clip.

(3) Remove the sunvisor from the vehicle.

(4) Remove the retaining screw and support clip.

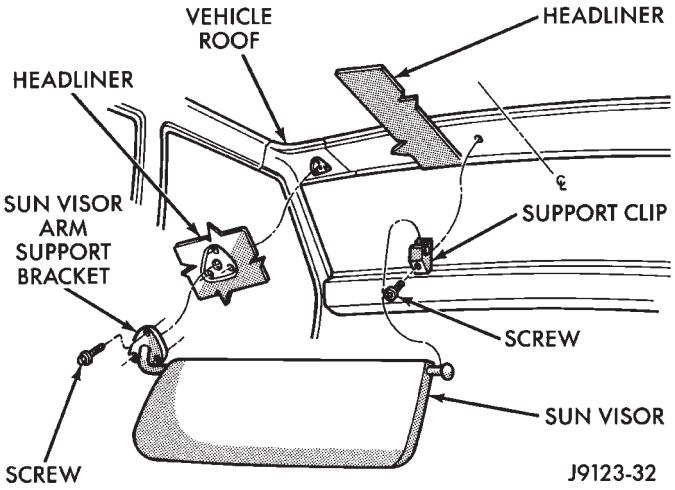

Fig. 7 Sunvisor Removal/Installation

INSTALLATION

(1) Install the support bracket and the retaining screw. Tighten the screw to 1 N·m (9 in-lbs) torque.

(2) Position the sunvisor in the support clip and align the arm support bracket holes with the headliner holes.

(3) Install the screws that attach the sunvisor arm support bracket to the headliner and the roof panel. Tighten the screws to 4 N·m (35 in-lbs) torque.

SOUND BAR—XJ

REMOVAL

(1) Disconnect battery negative cable.
(2) Remove left and right upper trim molding.
(3) Remove sound bar screws.
(4) Separate sound bar from roof.
(5) Disconnect speaker connector.
(6) Disconnect cargo lamp connector.
(7) Remove sound bar from vehicle (Fig. 8).

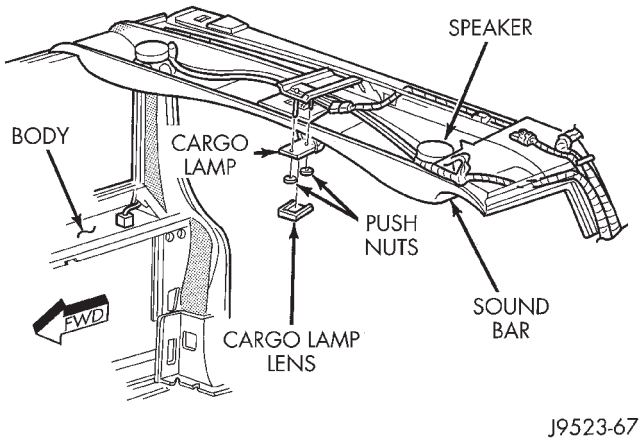

Fig. 8 Sound Bar Removal/Installation

INSTALLATION

(1) Position sound bar in vehicle.
(2) Connect speaker connecter.
(3) Connect cargo lamp connector.
(4) Position sound bar at roof.
(5) Install sound bar screws.
(6) Install left and right upper trim molding.
(7) Connect battery negative cable.

CARGO LAMP—XJ

REMOVAL

(1) Remove the cargo lamp lens (Fig. 8) by squeezing both sides to release the retaining clips. Pull downward to remove the lens.
(2) Remove the push nuts.
(3) Disconnect the wire harness connector.
(4) Remove the lamp from the sound bar.

INSTALLATION

(1) Connect the cargo lamp wire harness connector.
(2) Position the cargo lamp in the sound bar hole and install the push nuts.
(3) Install the cargo lamp lens.

MINI-FLOOR CONSOLE—XJ

Mini-consoles are installed in XJ vehicles with and without a transmission floor shift (Fig. 1).

PARKING BRAKE HANDLE COVER—XJ

REMOVAL

(1) Detach the rear of the cover from the base and pivot it upward (Fig.2).
(2) Remove the retaining screws from the cover base.
(3) Remove the trim cover from the from the floor.

INSTALLATION

(1) Position the cover on the floor and install the retaining screws.
(2) Pivot the cover to the closed position and engage the locking tab.

MINI-CONSOLE WITH FLOOR SHIFT—XJ

REMOVAL

(1) Remove the transmission shift lever handle/knob. For vehicles with an automatic transmission, pull the handle straight up. For vehicles with a manual transmission, loosen the locknut and un-thread the shift knob from the shaft.
(2) Remove the automatic transmission and transfer case shift indicator bezel by prying upward to release them (Fig. 3).
(4) Disconnect the lamp socket from the bezel.
(5) Remove the console retaining screws.
(6) Disconnect the wire harness connector.

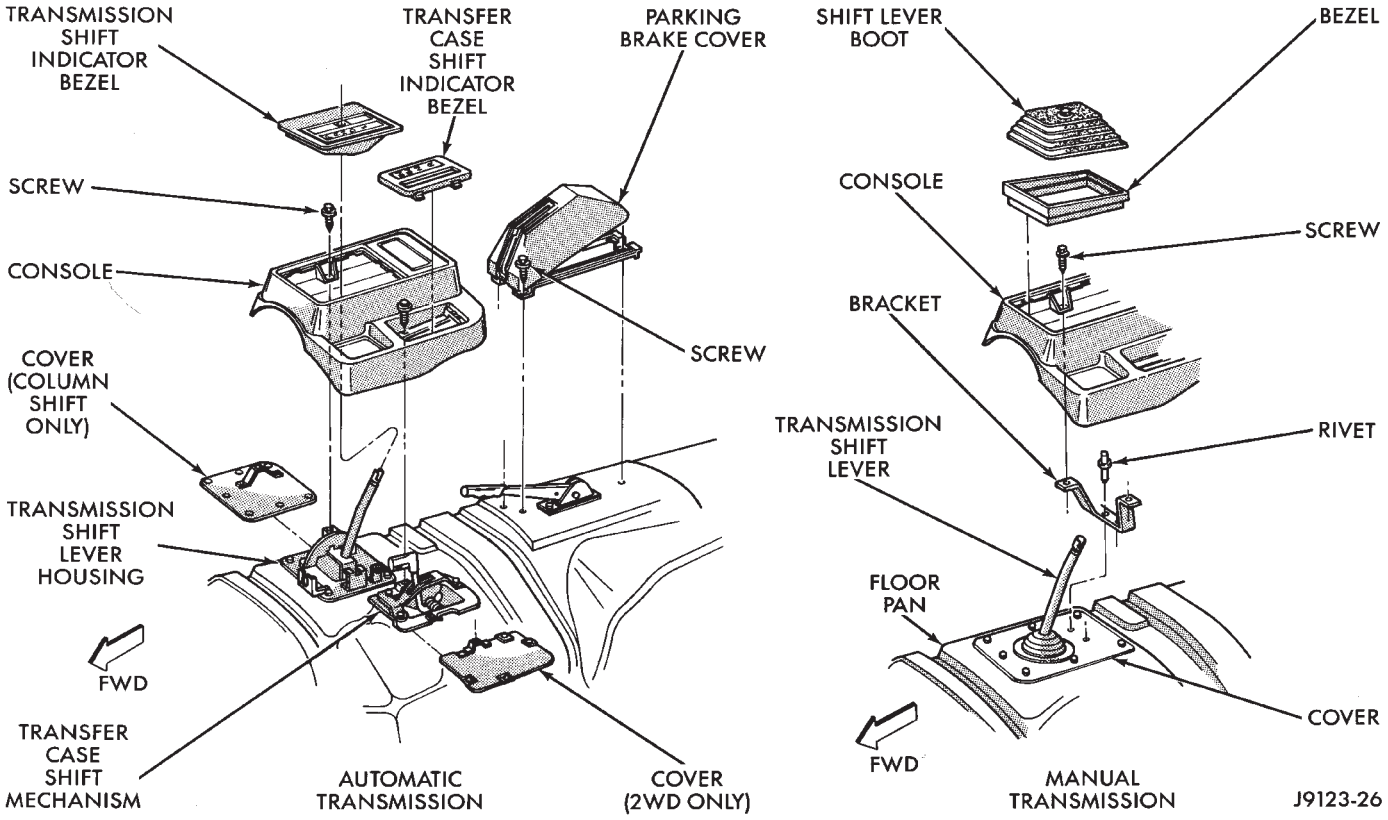

Fig. 1 Mini-Console With Floor Shift

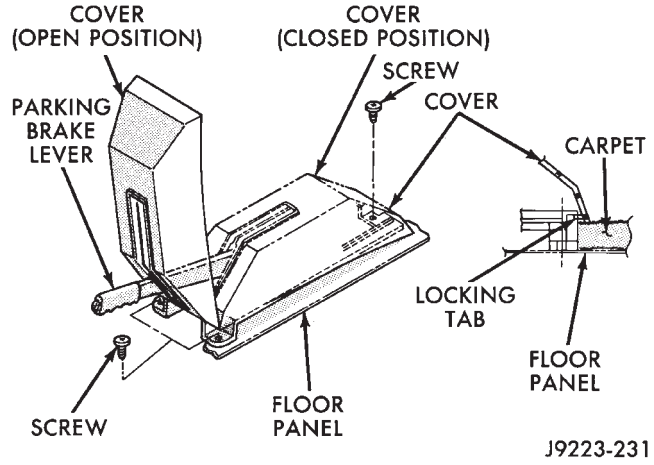

Fig. 2 Park Brake Cover With Mini-Console

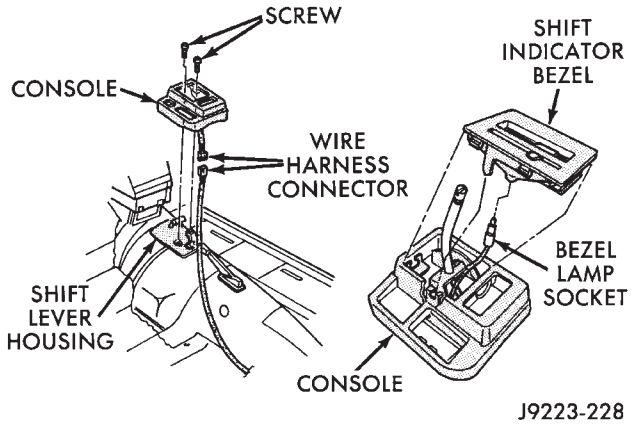

Fig. 3 Mini-Console With Floor Shift

(7) Remove the mini-console from the transmission tunnel.

INSTALLATION

(1) Position the mini-console on the transmission tunnel, connect the wire harness connector and install the retaining screws. Tighten the screws to 1 N·m (13 in-lbs) torque.

(2) Position the shift indicator bezel at the console and connect the lamp socket to the bezel. Install the bezel in the console.

(3) Install the shift lever handle/knob. For automatic transmissions, push the handle downward until it is engaged. For manual transmissions, thread the knob onto the shaft and tighten the locknut.

FULL FLOOR CONSOLE—XJ

REMOVAL

(1) Remove the transmission shift lever handle/knob. For automatic transmissions, pull the handle straight upward to remove it. For manual transmissions, loosen the locknut and un-thread the shift knob from the shaft.

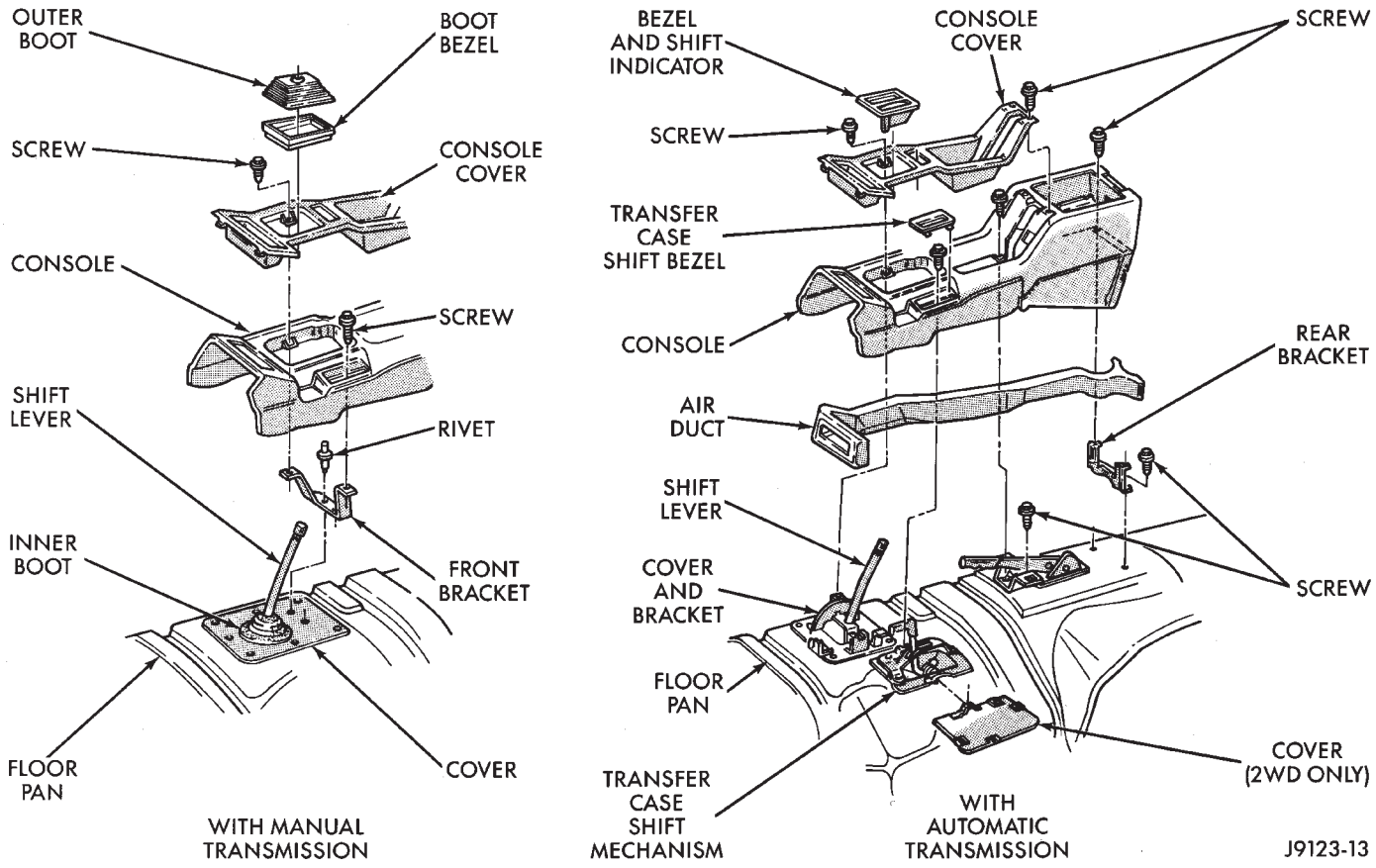

Fig. 4 Full Console

(2) Remove the automatic transmission shift indicator bezel (Fig. 4). Remove the transfer case shift indicator bezel (if equipped) or cover plate from the console (Fig. 5).

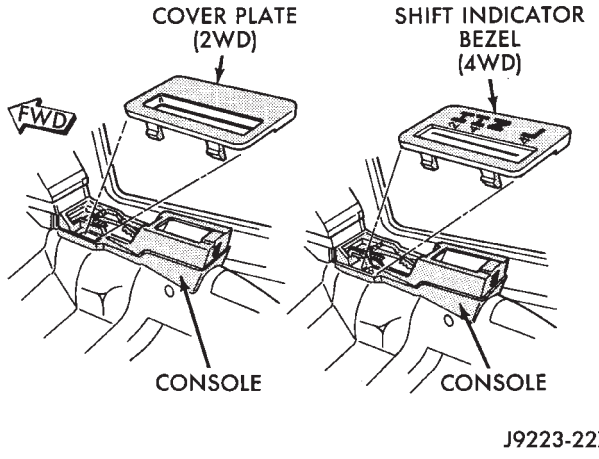

Fig. 5 Transfer Case Shift Indicator Bezel/Cover Plate

(3) If equipped, insert a thin-blade tool under the edge of the outside mirror remote control switch and pry outward to detach it from the console. Disconnect the wire harness connector from the switch (Fig. 6).

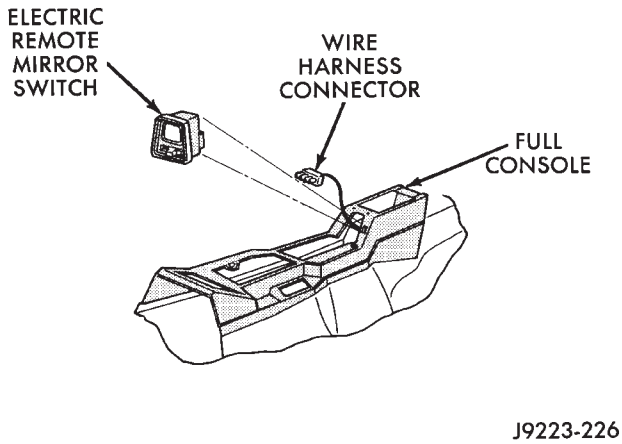

Fig. 6 Outside Mirror Remote Control Switch

(4) Remove the cover retaining screws and remove the cover from the console (Fig. 7).

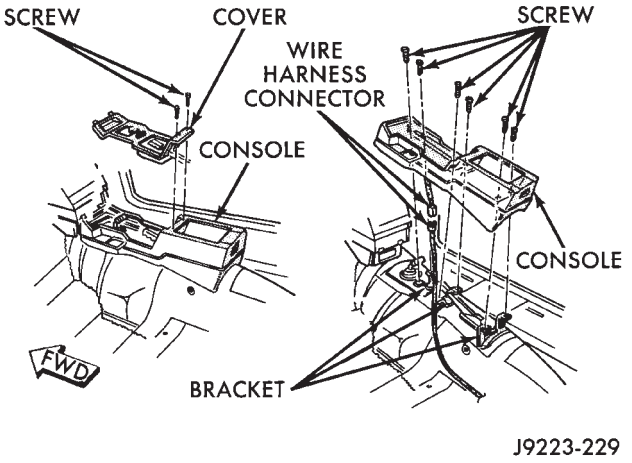

Fig. 7 Full Console Removal/Installation

(5) Remove the remainder of the console attaching screws from the brackets and disconnect the wire harness connector.

(6) Separate the console floor air duct from the air outlet duct (Fig. 8).

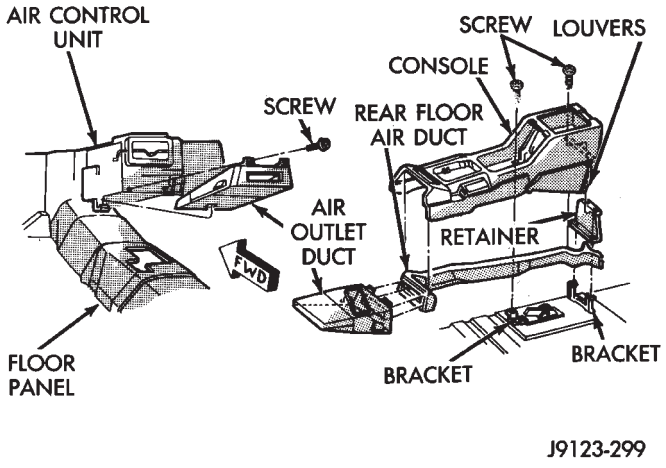

Fig. 8 Air Outlet and Console Floor Air Ducts

(7) Remove the console and air duct from the floor.

(8) Separate the floor air duct from the console.

(9) Remove the retaining screws and detach the floor duct from the heater housing, if necessary.

(10) Remove the console support brackets.

The brackets are attached directly to the floor panel below the carpet.

INSTALLATION

(1) Install the console support brackets, if removed. Tighten the screws to 1 N·m (11 In-lbs) torque.

The brackets are attached directly to the floor panel below the carpet.

(2) Attach the floor duct to the heater housing, if removed. Tighten the screws to 1 N·m (11 In-lbs) torque.

(2) Attach the air duct to the console.

(3) Position the console on the floor, attach the air duct to the air outlet duct, connect the wire harness connector and install the console retaining screws in the brackets. Tighten the screws to 1 N·m (11 In-lbs) torque.

(4) Install the console cover and shift indicator bezels (or cover plate). Tighten the screws to 1 N·m (11 In-lbs) torque.

(5) If equipped:

- Connect the wire harness connector to the outside mirror remote control switch.
- Insert the switch into the console hole.
- Push inward to engage the retaining clips.

(6) Install the shift lever handle/knob.

JACK STORAGE—XJ

The XJ lift jack and related tools are stored under the rear seat behind the front passenger's seat. The jack and tools are attached to the floor panel and seat cushion crossmember with a retainer and holddown bolt (Fig. 1).

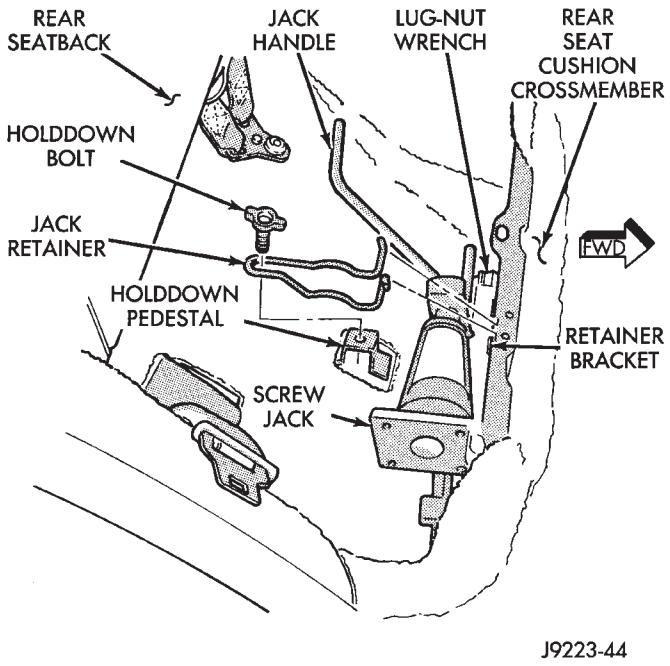

Fig. 1 Jack and Related Tools

When necessary, the jack retainer bracket can be removed from the crossmember by drilling-out the rivet heads and then removing the rivet bodies with a punch. Install the retainer bracket with either rivets or bolts and nuts (Fig. 2).

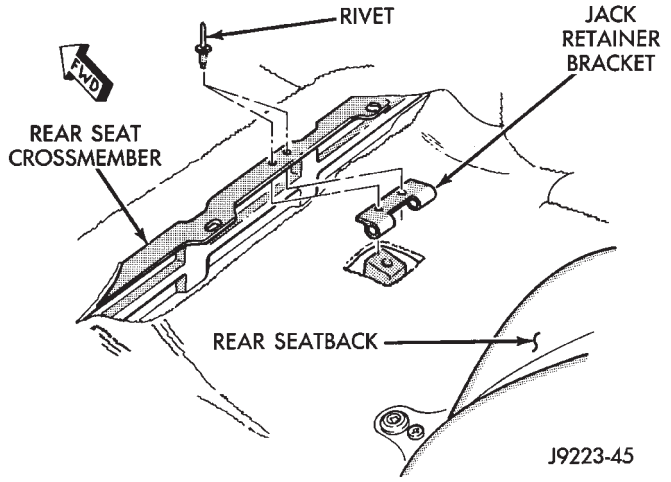

Fig. 2 Jack Retainer Bracket

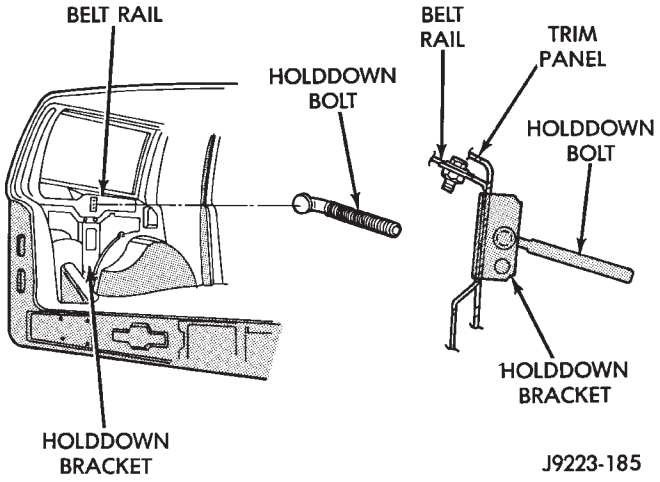

Fig. 4 Spare Tire/Wheel Holddown Bolt and Bracket (LHD)

SPARE TIRE/WHEEL HOLDDOWN AND FLOOR BRACKETS—XJ

REMOVAL

(1) Remove the spare tire and wheel (Fig. 3).

(2) Remove the floor bracket retaining screws.

(3) Remove the holddown bolt from the holddown bracket (Fig. 4 and 5).

(4) Remove the trim panel from the quarter panel. If necessary, refer to the removal procedure.

(5) Remove the retaining screws and the holddown bracket from the quarter panel.

INSTALLATION

(1) Position the holddown bracket on the quarter panel and install the retaining screws. Tighten the screws to 8 N·m (71 in-lbs) torque.

(2) Install the quarter trim panel. If necessary, refer to the installation procedure.

(3) Install the holddown bolt in the holddown bracket.

The length of the holddown bolt is different for P195 and P225 tires.

(4) Position the floor bracket on the trim panel and install the retaining screws. Tighten the screws to 1 N·m (11 in-lbs) torque.

(5) Install the spare tire and wheel.

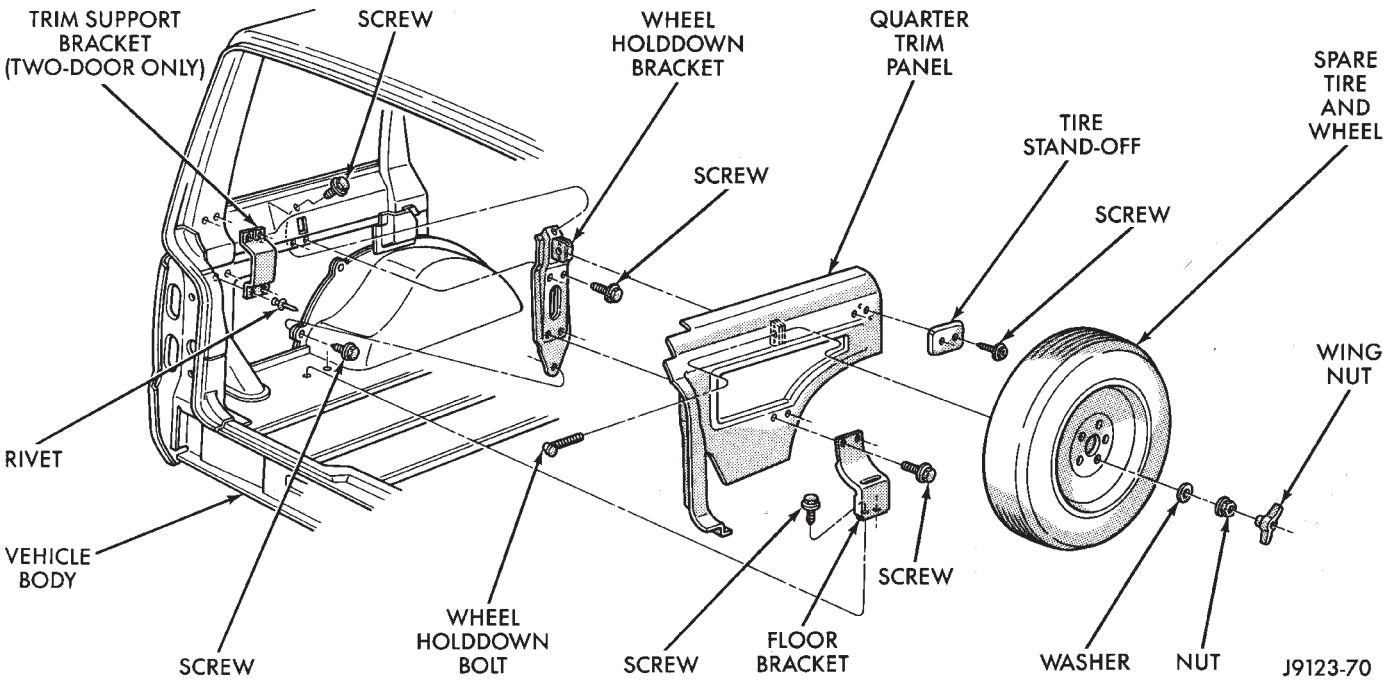

Fig. 3 Interior Spare Tire/Wheel Holddown and Floor Brackets

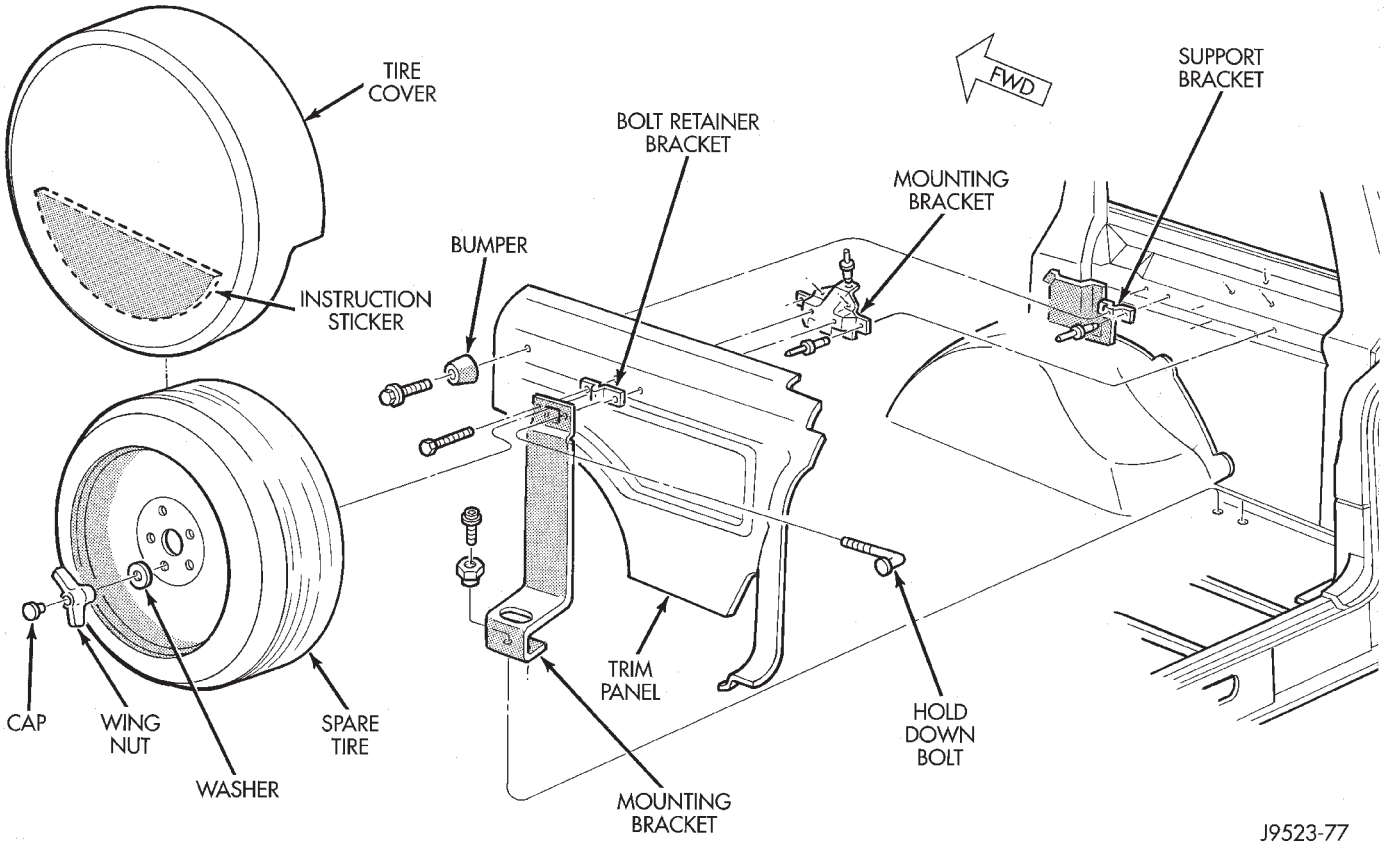

Fig. 5 Spare Tire/Wheel Holddown Bolt and Bracket (RHD)

CARPETS AND FLOOR MATS—XJ

The carpets/mats are retained around the perimeter of the floor panel by the interior trim moldings and trim panels. To remove a carpet/mat, all of the retaining trim moldings and panels must be removed along with all the interfering components (as applicable):

- Seat(s).
- Parking brake lever cover.
- Floor console.
- Transmission and transfer case (if equipped) floor shift cover/boot.

If necessary, refer to the applicable removal procedure(s) within this manual.

FRONT CARPET/MAT—XJ

REMOVAL

(1) Remove the door sill inner scuff plates.
(2) Remove the front and rear seats (as applicable).
(3) As necessary, remove the trim panels and moldings.
(4) Remove all other interfering components.
(5) Remove the carpet and mat from the floor panel (Fig. 6).

INSTALLATION

(1) Position the carpet and mat on the floor panel.

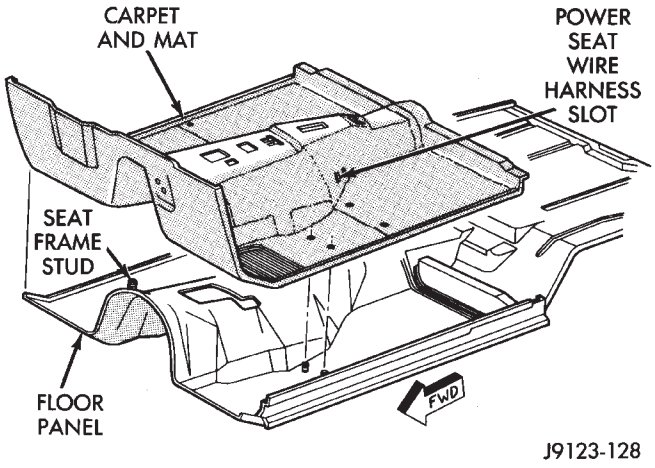

Fig. 6 Front Carpet and Mat

(2) Install all the components that were removed to facilitate carpet/mat removal.
(3) Install the trim panels and moldings.
(4) Install the door sill inner scuff plates.
(5) Install the front and rear seats (as applicable).

REAR CARPET/MAT—XJ

REMOVAL

(1) Remove the retaining screws, and the liftgate latch striker and scuff plate (Fig. 7).

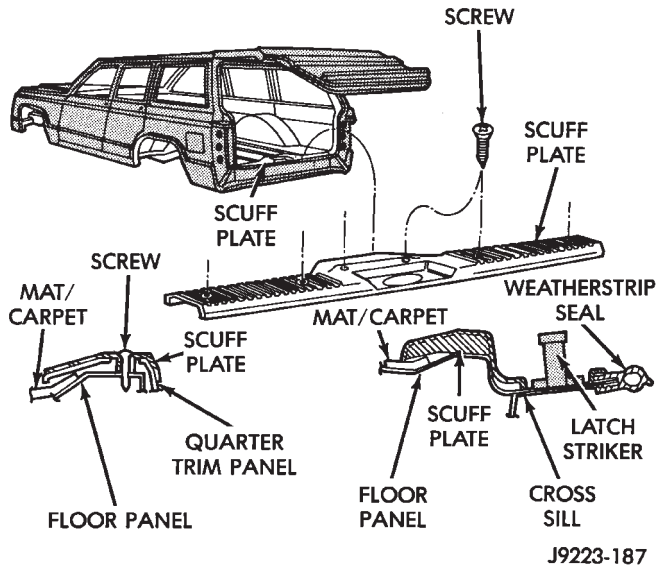

Fig. 7 Liftgate Latch Striker and Scuff Plate

(2) Drill-out the retaining rivet heads and remove the cargo tie-down footman loops from the carpet.

(3) As necessary, remove the trim panels and moldings.

(4) Remove the all other interfering components.

(5) Remove the carpet and mat from the floor panel.

(6) If necessary, remove the skid strips from the carpet (Fig. 8).

(7) If necessary, remove the insulation from the wheelhouse (Fig. 9).

INSTALLATION

(1) If removed, install the skid strips on the carpet.

(2) If removed, install the insulation on the wheelhouses.

(3) Position the mat on the floor panel.

(4) Position the carpet on the mat.

(5) Install all the components that were removed to facilitate carpet and mat removal.

(6) Install the trim panels and moldings.

(7) Install the cargo tie-down footman loops on the carpet with replacement rivets.

(8) Position the liftgate scuff plate and latch striker on the carpet and cross sill. Install and tighten the scuff plate screws to 1 N·m (11 in-lbs) torque. Tighten the latch striker screws to 30 N·m (22 ft-lbs) torque.

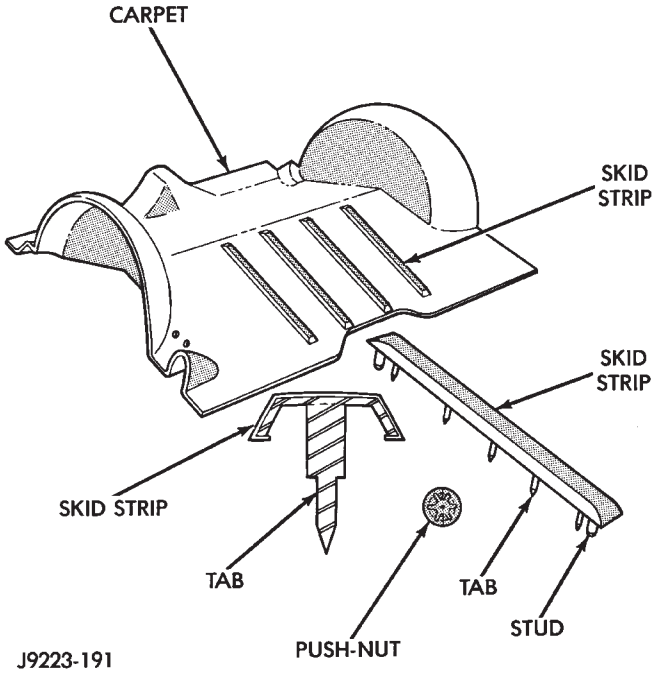

Fig. 8 Rear Carpet Skid Strips

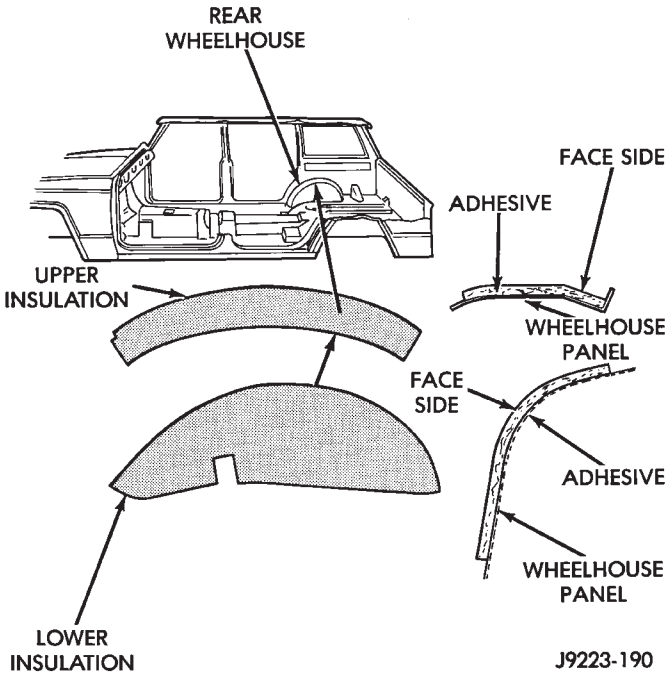

Fig. 9 Wheelhouse Insulation

CARGO BARRIER—XJ

REMOVAL

(1) Tilt both seats forward and raise the storage compartment lid.

(2) Remove the wing nuts from the front side of the cargo barrier (Fig. 10).

(3) Remove the fasteners from the lower outer corners of the cargo barrier.

(4) Remove the cargo barrier.

INSTALLATION

(1) Reverse the removal procedure to install the cargo barrier.

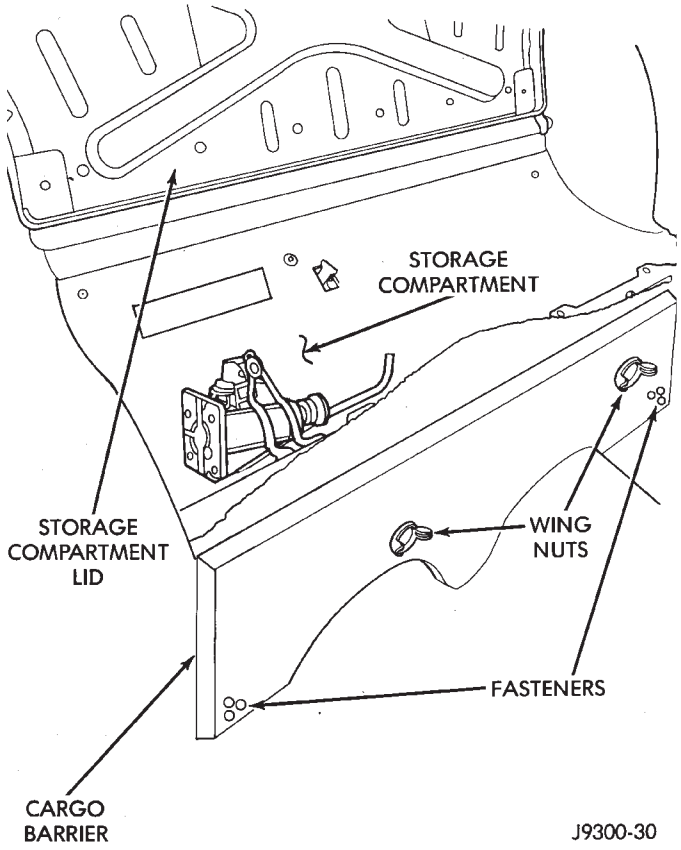

Fig. 10 Cargo Barrier

BODY COMPONENTS—YJ VEHICLES

CONTENTS

	page		page
DOORS	134	INTERIOR COMPONENTS	151
EXTERIOR COMPONENTS	104	PAINT	158
GENERAL SERVICE INFORMATION	102	STATIONARY GLASS	144

GENERAL SERVICE INFORMATION

LABELS/DECALS/PLATES—YJ

Most of the labels, decals and metal plates that are affixed to YJ vehicles (Figs. 1, 2, 3, 4 and 5) contain either safety or otherwise essential information.

Refer to the Introduction of this manual for additional information involving labels and metal plates.

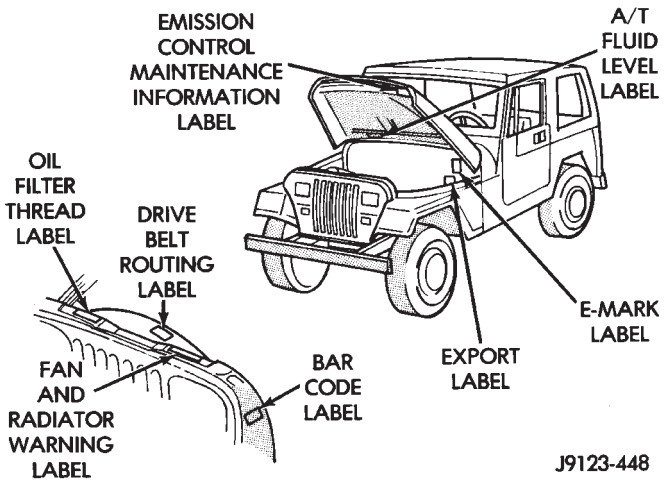

Fig. 1 YJ Underhood Labels/Decals

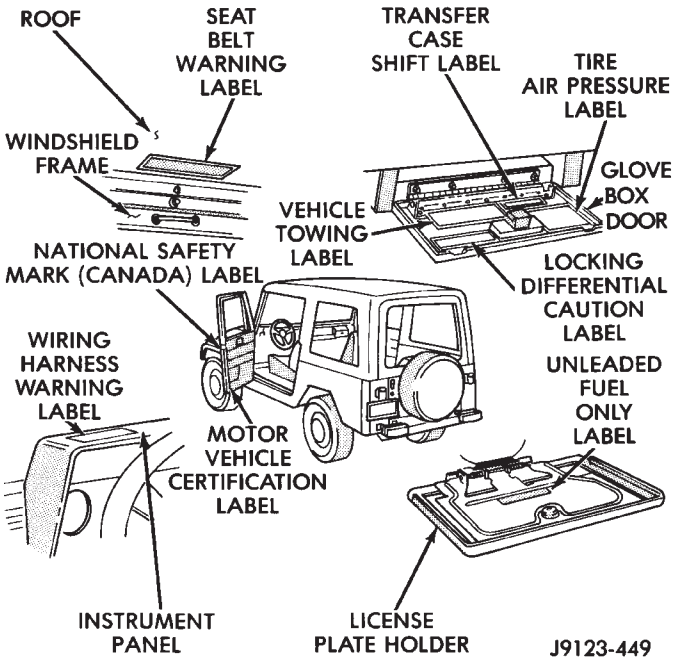

Fig. 2 YJ Interior and License Plate Holder Labels/Decals

INSTALLATION

Follow the instructions included with each replacement label/decal/plate to affix it to a panel, component or window glass.

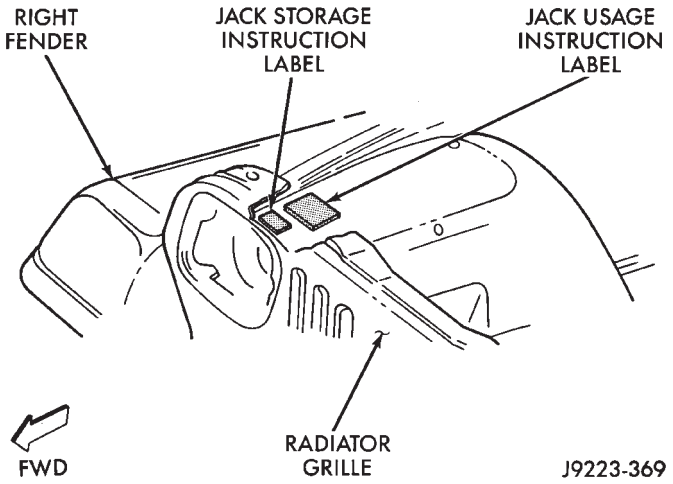

Fig. 3 YJ Jack Storage and Usage Labels

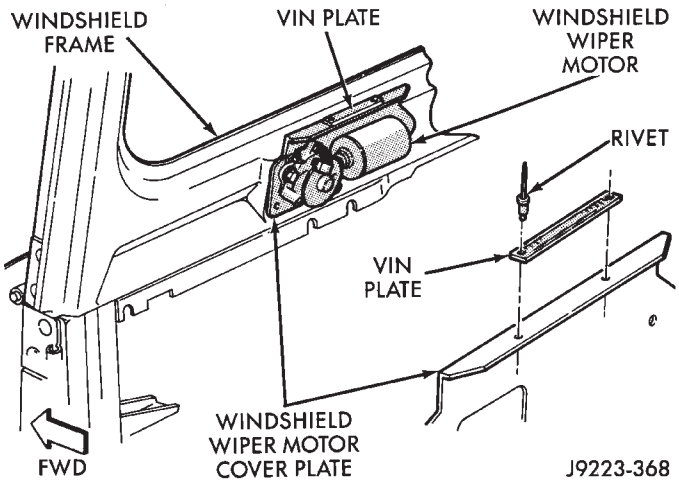

Fig. 5 YJ VIN Plate

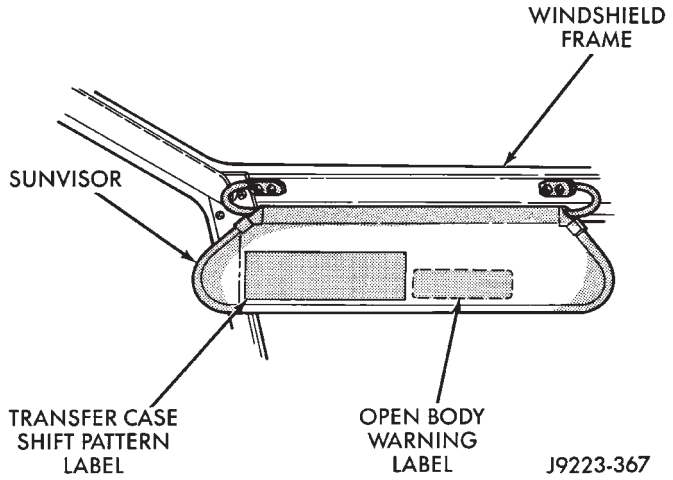

Fig. 4 YJ Sunvisor Labels

EXTERIOR COMPONENTS

INDEX

	page		page
Battery Tray—YJ	110	Hood Alignment—YJ	107
Body Side Step Molding—YJ	115	Hood Insulator Panel—YJ	107
Body Stripes/Decals—YJ	116	Hood Safety Latch—YJ	109
Cowl Grille and Screen—YJ	109	Hood—YJ	107
Cowl Weatherstrip Seal—YJ	109	Liftgate Glass Weatherstrip Seal Replacement—YJ	125
Exterior Nameplates (Adhesive-Backed)—YJ	120	Radiator Grille Applique—YJ	104
External Spare/Wheel Tire Carrier—YJ	133	Soft Top Service Information—YJ	127
Fender Flare—YJ	114	Soft Top Service—YJ	129
Fender Inner Splash Shields—YJ	116	Sport Bar—YJ	132
Fender Splash Aprons—YJ	115	Tailgate Adjustment—YJ	121
Fenders—YJ	110	Tailgate Hinge—YJ	121
Fuel Filler Protector/Nozzle—YJ	121	Tailgate Latch and Release Handle—YJ	122
Half Metal Door Mirror (External)—YJ	121	Tailgate Latch Striker—YJ	123
Hard Top Liftgate Glass—YJ	124	Tailgate Lock Cylinder—YJ	122
Hard Top Repair—YJ	127	Tailgate Weatherstrip Seal—YJ	123
Hard Top Roof Vent—YJ	127	Tailgate—YJ	121
Hard Top—YJ	126	Wheelhouse Splash Liners—YJ	115

RADIATOR GRILLE APPLIQUE—YJ

REMOVAL

(1) Raise the hood.

(2) Remove the headlamp bezels (Fig. 1).

(3) Remove the headlamp bulb retainer screws (Fig. 2).

(4) Disconnect and remove the headlamps and buckets as a unit (Fig. 2).

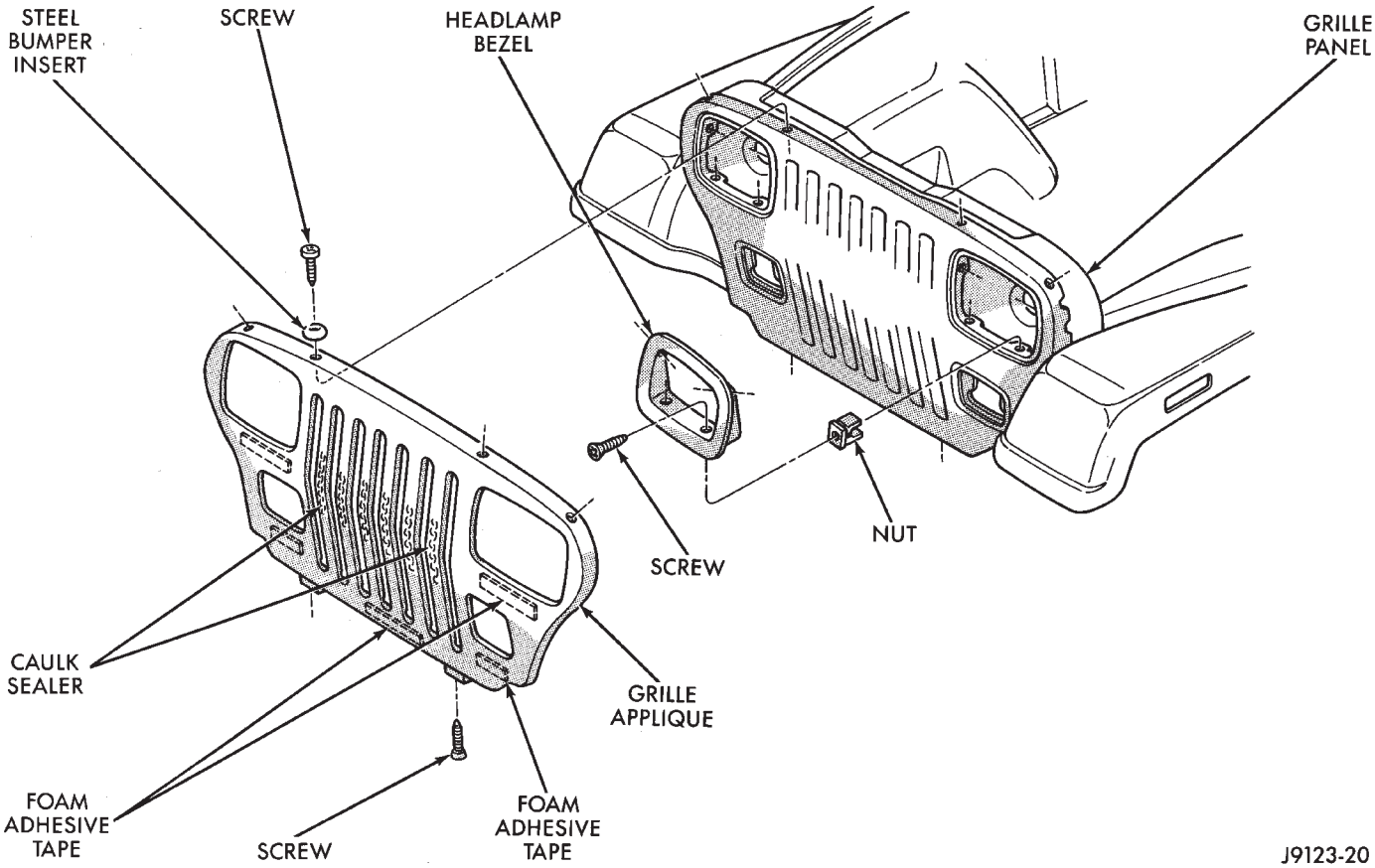

Fig. 1 Grille Applique, Headlamp Bezel and Grille Panel

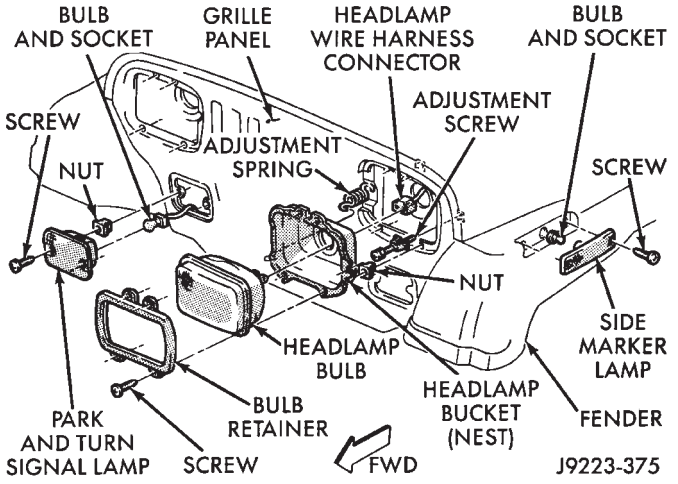

Fig. 2 Front Lamps

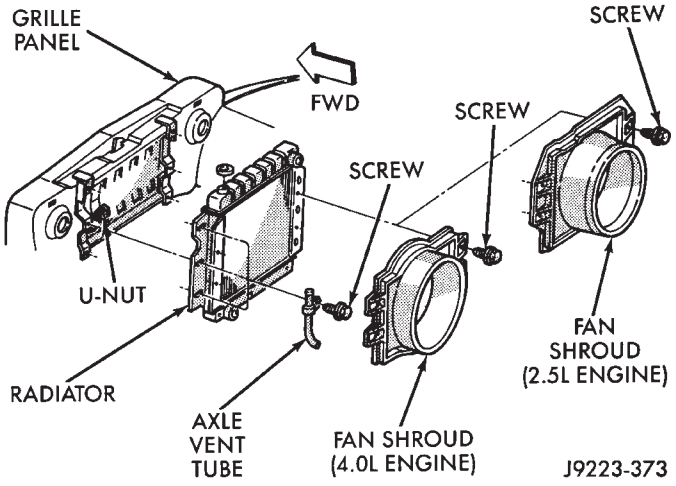

Fig. 3 Radiator and Shroud

(5) Remove the parking lamp retaining screws (Fig. 2).

(6) Disconnect the wire harness connectors and remove the parking lamps (Fig. 2).

(7) Remove the front crossmember cover.

(8) Remove the retaining screws and the bumper inserts at the top of the grille panel (Fig. 1).

(9) Detach the grille applique from the grille panel (Fig. 1).

(10) Remove the double faced foam adhesive tape at the bottom of the grille applique (Fig. 1).

INSTALLATION

(1) Install double faced foam tape at the bottom, interior side of the grille applique (Fig. 1).

(2) Position the grille applique over the grille panel and press inward along the bottom where the tape is located (Fig. 1).

(3) Install the grille applique retaining screws and the bumper inserts (Fig. 1).

(4) Connect the wire harness connectors and position the headlamp buckets and headlamps in the grille panel (Fig. 2).

(5) Install the headlamp bulb retainer and the screws (Fig. 1). Tighten the screws to 2 N·m (18 in-lbs) torque.

(6) Install the headlamp bezels and the retaining screws (Fig. 1). Tighten the screws securely.

(7) Connect the wire harness connectors and install the parking lamps.

(8) Install the parking lamp retaining screws. Tighten the screws to 2 N·m (18 in-lbs) torque.

(9) Close the hood.

(10) Install the front crossmember cover.

RADIATOR GRILLE PANEL

REMOVAL

(1) Remove the front crossmember cover.

(2) Remove the screws and washers, and separate the radiator and shroud from the grille panel (Fig. 3).

(3) If equipped, remove the retaining bolts and separate the A/C condenser from the grille panel (Fig. 4).

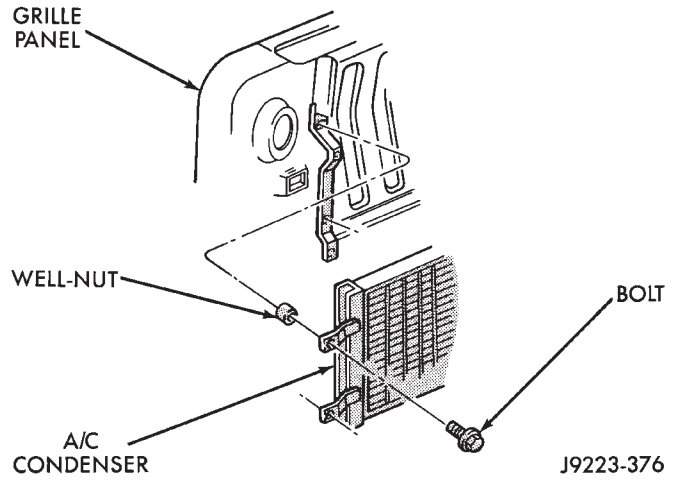

Fig. 4 Radiator and Shroud

(4) Remove the retaining screws and the P/S fluid reservoir from the grille panel (Fig. 5).

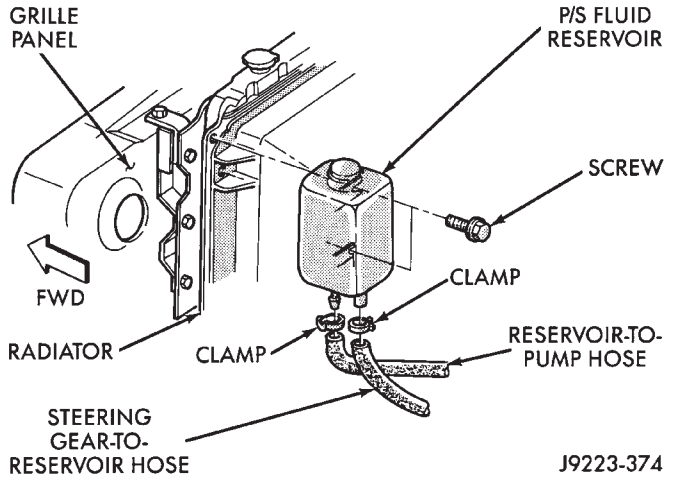

Fig. 5 P/S Fluid Reservoir

(5) Remove the retaining screws and the air intake adapters from the grille panel (Fig. 6).

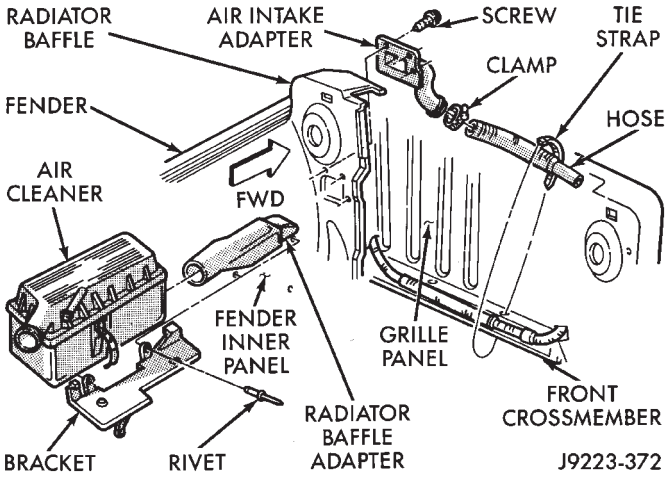

Fig. 6 Air Intake and Radiator Baffle Adapters

(6) Remove the bolts and washers that attach the grille panel to the fenders (Fig. 7).

(7) Remove the bolts, washers and spacers that attach the grille panel to the front crossmember (Fig. 8).

(8) Remove the nuts that attach the radiator support rods to the front brackets (Fig. 9). Remove the rods from the brackets.

(9) Tilt the grille panel forward and disconnect the head lamp, turn signal and marker lamp wire harness connectors.

(10) For vehicles equipped with A/C, discharge the A/C system. Disconnect the high pressure hose at the sight glass connection and at the compressor. Cap the hose and fittings to prevent foreign material entry. If necessary, refer to Group 24—Heating And Air Conditioning.

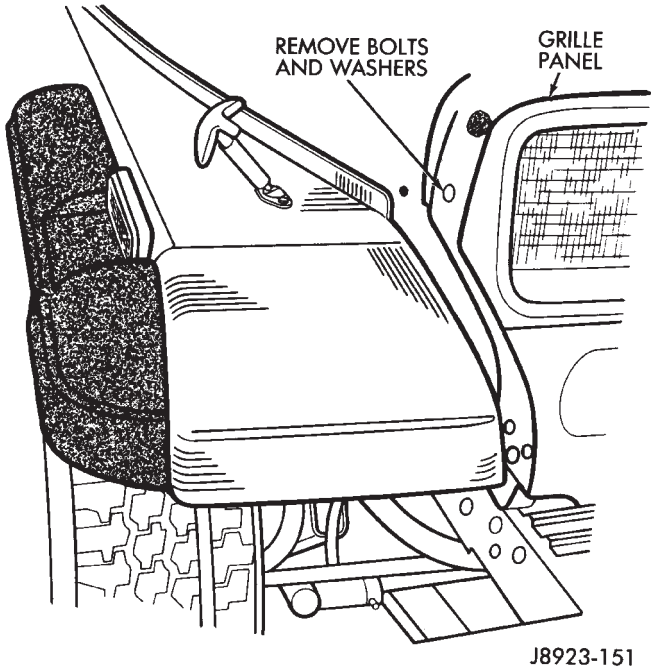

Fig. 7 Grille Panel Front Bolt

(11) Remove the grille panel from the vehicle (Fig. 8).

(12) If a replacement radiator grille panel will be installed, remove the grille applique (Fig. 8) and transfer the lamps, the headlamp buckets and the retaining brackets.

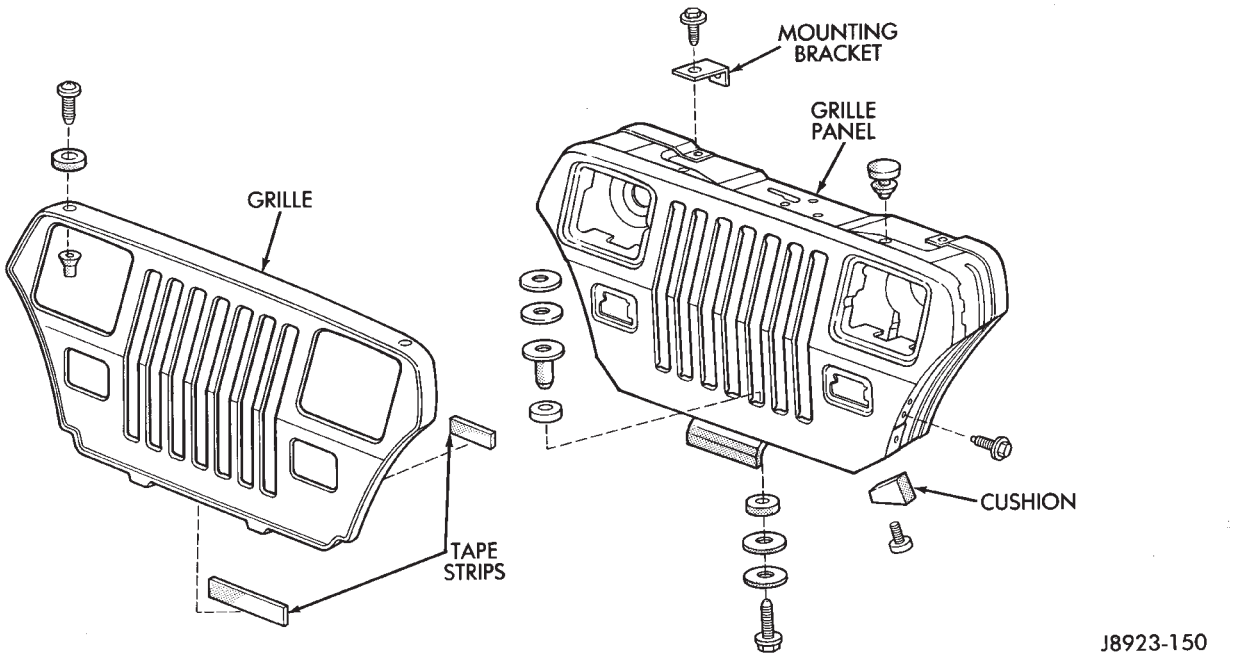

Fig. 8 Radiator Grille Applique and Grille Panel

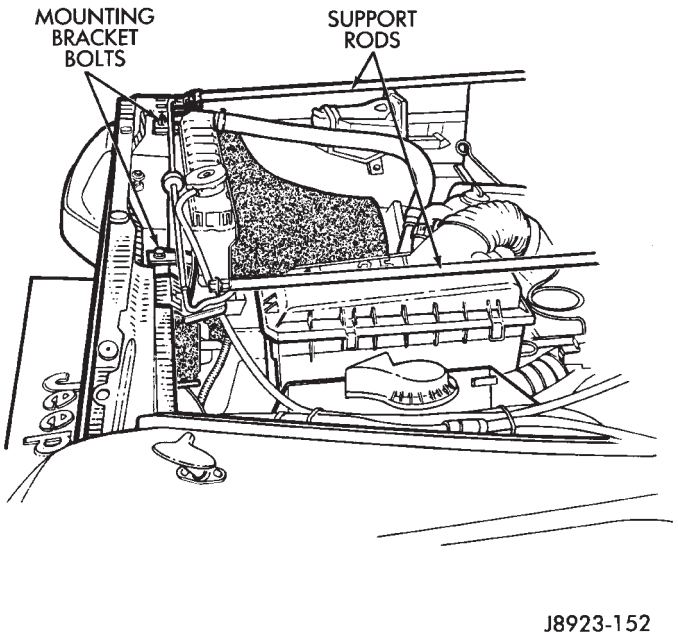

Fig. 9 Radiator Support Rods

INSTALLATION

(1) Position the grille panel on the vehicle.

(2) Connect the marker, park and headlamp wire harness connectors.

(3) Connect the radiator support rods with the retaining brackets (Fig. 9).

(4) Attach the grille panel to the front crossmember.

(5) Install the grille panel-to-front fender bolts (Fig. 7). Tighten the retaining screws to 27 N·m (20 ft-lbs) torque.

(6) Install the air intake adapters on the grille panel (Fig. 6). Tighten the retaining screws to 3 N·m (25 in-lbs) torque.

(7) Install the P/S fluid reservoir on the grille panel (Fig. 5). Tighten the retaining screws to 8 N·m (72 in-lbs) torque.

(8) If equipped, install the A/C condenser on the grille panel (Fig. 4). Tighten the retaining screws to 2 N·m (20 in-lbs) torque. Connect the high pressure hose at the sight glass connection and at the compressor.

(9) Install the radiator and shroud on the grille panel (Fig. 3). Tighten the retaining screws to 15 N·m (132 in-lbs) torque.

(10) Install the front crossmember cover.

(11) If removed, install the grille applique (Fig. 8).

(12) Evacuate and charge the A/C system.

HOOD—YJ

REMOVAL

(1) Raise and support the hood.

(2) Disconnect the underhood lamp wire harness connector (Fig. 10).

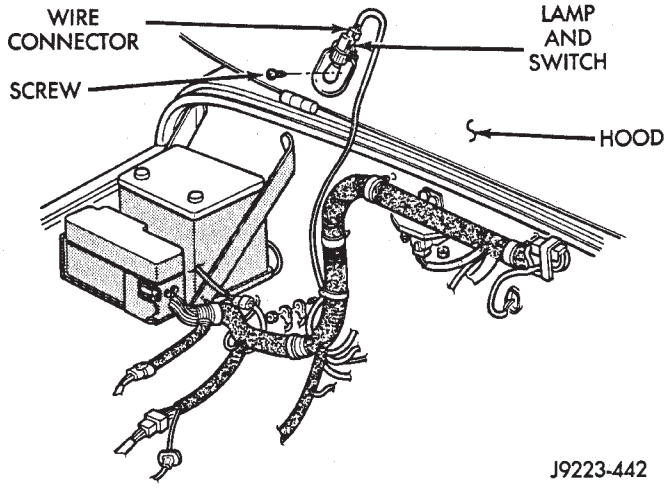

Fig. 10 Underhood Lamp

(3) Mark the position of the hinges on the hood for installation alignment reference (Fig. 11).

(4) Remove the hinge attaching screws and remove the hood (Fig. 11).

(5) If the hood must be replaced, remove and transfer the insulator panel, hinges, latches, bumpers, brackets, footman loop, hood lamp, support rod, and safety latch to the replacement hood (Fig. 12).

INSTALLATION

(1) Position the hood on the vehicle and install the hinge attaching screws.

(2) Align the hinges with the installation reference marks on the hood and tighten the hinge screws securely.

(3) Connect the underhood lamp wire harness connector (Fig. 10).

(4) Close the hood.

HOOD ALIGNMENT—YJ

The hood hinge attaching screw holes are oversized to facilitate hood adjustment movement.

(1) Loosen the hinge attaching screws.

(2) Move the hood in the direction(s) required for correct alignment.

(3) Tighten the hinge attaching screws.

HOOD INSULATOR PANEL—YJ

REMOVAL

(1) Raise and support the hood.

(2) Remove the insulator panel retainers (Fig. 13).

(3) Remove the insulator panel from the hood.

INSTALLATION

(1) Position the insulator panel on the hood.

(2) Install the insulator panel retainers.

(3) Remove the support rod and close the hood.

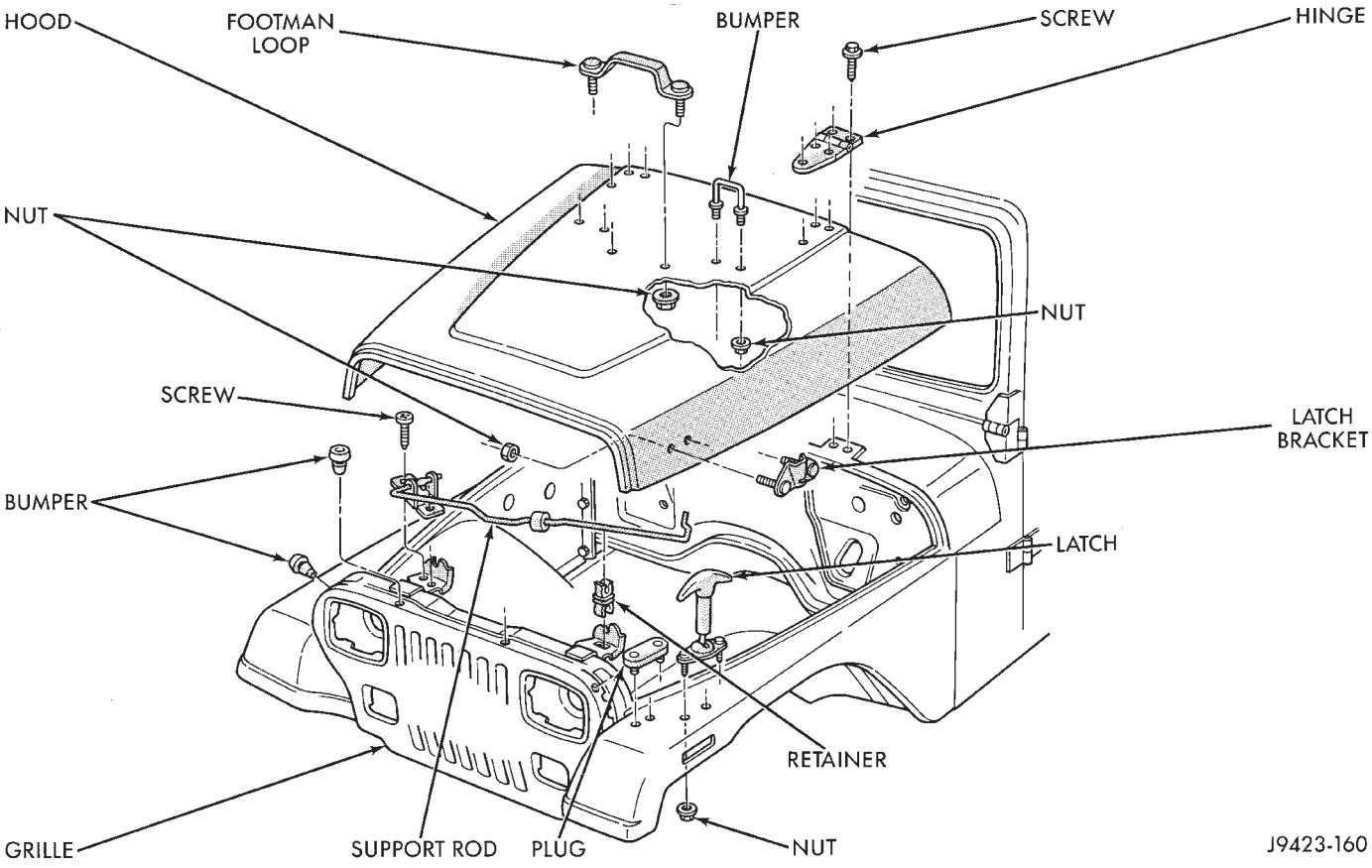

Fig. 11 Hood and Components

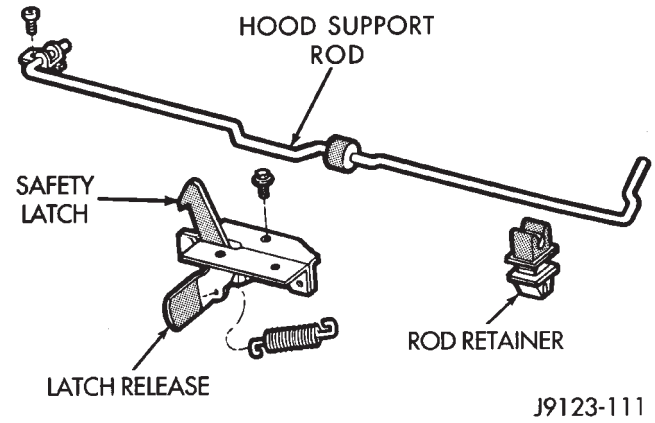

Fig. 12 Safety Latch and Support Rod

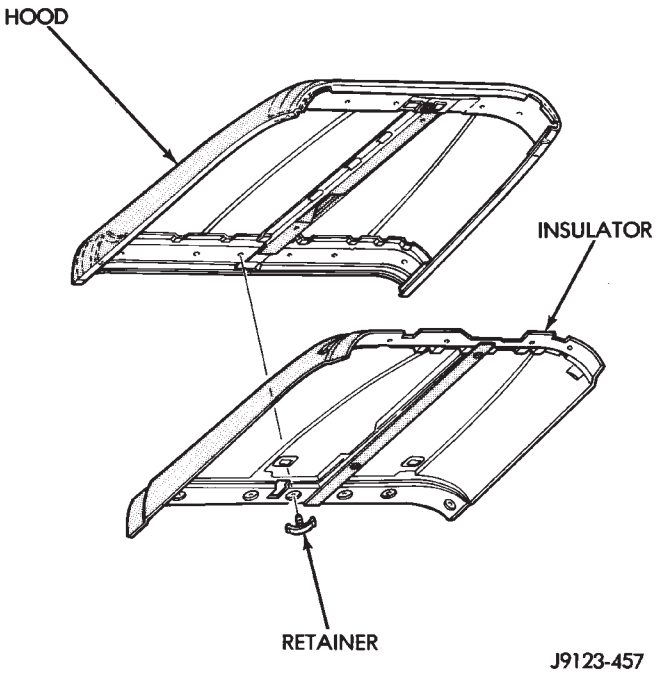

Fig. 13 Hood Insulator Panel

HOOD SAFETY LATCH—YJ

REMOVAL

(1) Raise and support the hood.

(2) Remove the latch retaining screws from the grille panel (Fig. 14).

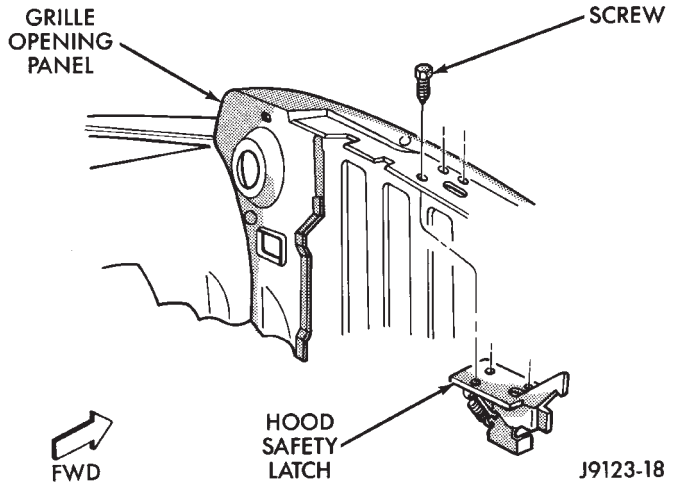

Fig. 14 Hood Safety Latch Removal/Installation

(3) Remove the latch from the grille panel.

INSTALLATION

(1) Position the latch on the grille panel (Fig. 14).

(2) Install the latch retaining screws.

(3) Remove the support rod and close the hood.

COWL WEATHERSTRIP SEAL—YJ

REMOVAL/INSTALLATION

(1) Carefully separate the seal from the cowl/dash panel flange (Fig. 15).

(2) Position the seal on the cowl/dash panel flange (Fig. 15) and press it against the panel edge.

COWL GRILLE AND SCREEN—YJ

REMOVAL

(1) Remove the screws that attach the cowl air intake grille to the cowl and to the air intake duct (Fig. 16).

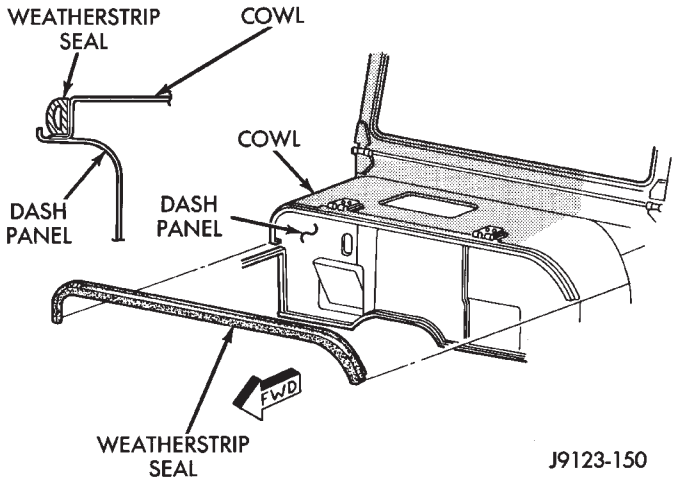

Fig. 15 Cowl Weatherstrip Seal

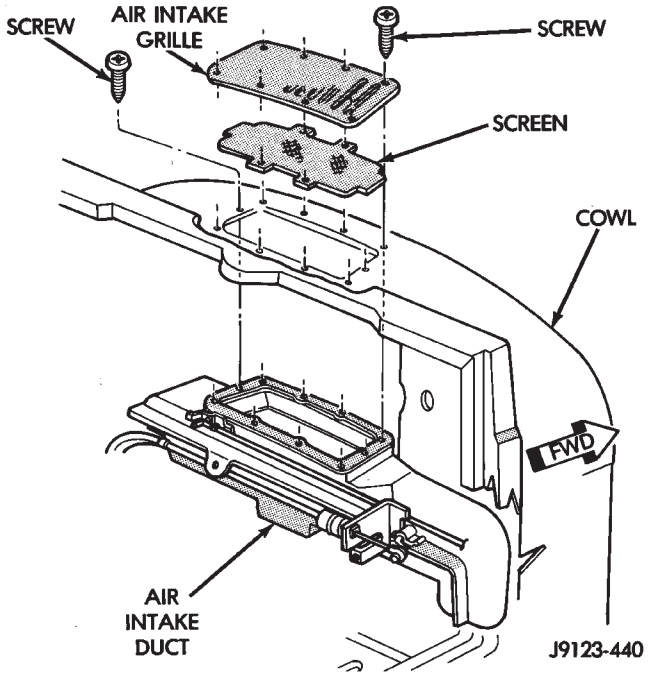

Fig. 16 Cowl Grille Removal/Installation

(2) Remove the grille and screen from the cowl (Fig. 16).

INSTALLATION

(1) Position the cowl screen and grille on the cowl.

(2) Attach the grille and screen to the cowl and the air intake duct with the screws (Fig. 16).

BATTERY TRAY—YJ

REMOVAL

(1) Remove the cables from the battery and power distribution center (Fig. 1).

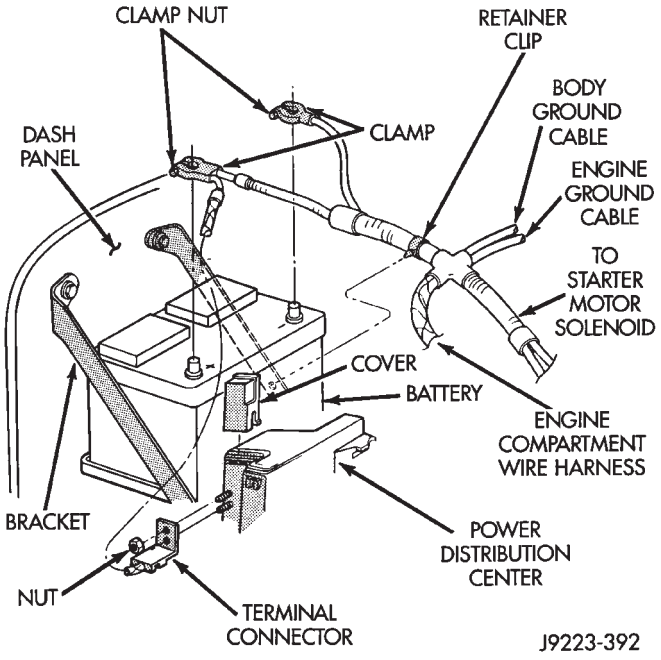

Fig. 1 Battery and PDC Cables

(2) Remove the retaining nuts and the battery holddown bracket from the holddown J-bolts (Fig. 2).

(3) Remove the battery from the tray.

(4) Remove the retaining screws, the support bracket and the PDC from the battery tray (Fig. 3).

(5) Remove the nuts that attach the battery tray to the cowl panel (Fig. 2).

(6) Remove the screws that attach the support brackets to the fender inner panel.

(7) Remove the screw that attaches the brace to the battery tray (Fig. 2).

(8) Remove the battery tray from the vehicle (Fig. 2).

INSTALLATION

(1) If removed, install the J-bolts on the battery tray.

(2) Position the battery tray on the cowl panel with the studs inserted in the holes.

(3) Attach the battery tray to the cowl panel studs with the attaching nuts.Tighten the nuts on the studs to 4 N·m (35 in-lbs) torque.

(4) Install the screw that attaches the brace to the battery tray. Tighten the screw to 18 N·m (156 in-lbs) torque.

(5) Install the screws that attach the support brackets to the fender inner panel. Tighten the screws to 18 N·m (156 in-lbs) torque.

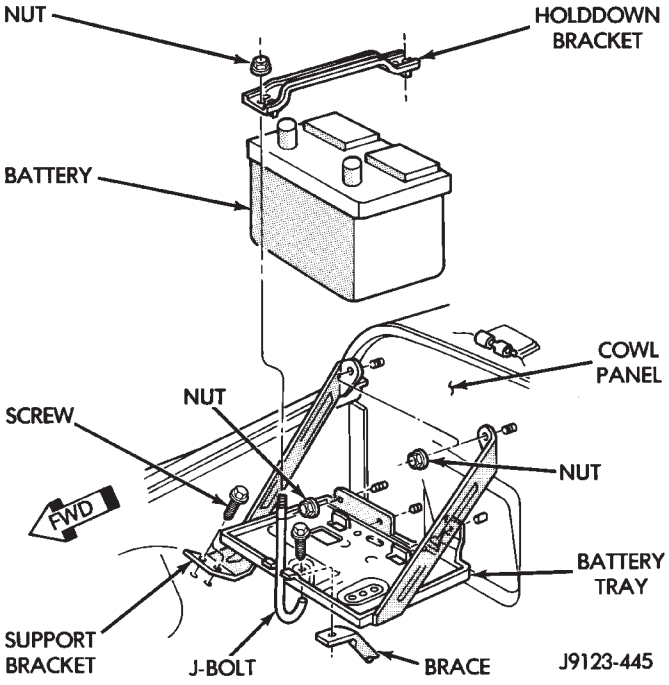

Fig. 2 Battery Tray Removal/Installation

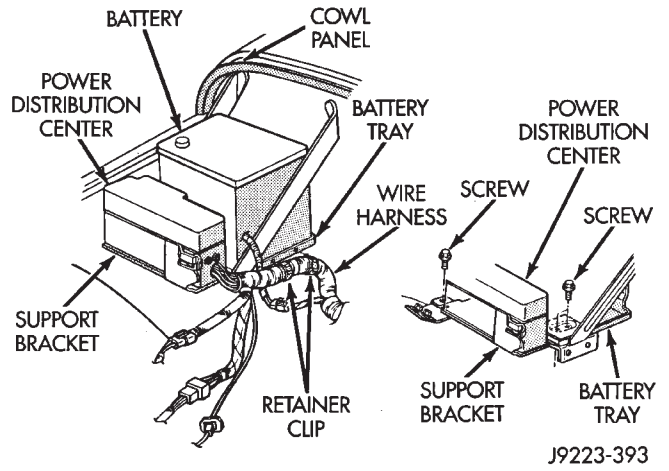

Fig. 3 PDC and Bracket Removal/Installation

(6) Install the support bracket and PDC on the battery tray. Tighten the screws to 18 N·m (156 in-lbs) torque.

(7) Install the battery in the tray.

(8) Position the holddown bracket over the J-bolts.

(9) Install the retaining nuts on the J-bolts. Tighten the nuts to 4 N·m (35 in-lbs) torque.

(10) Remove the cables from the battery and power distribution center.

FENDERS—YJ

SERVICE INFORMATION

YJ fenders are comprised of the fender outer panel, the fender inner panel, the front and rear support brackets, and the splash shields (Fig. 4).

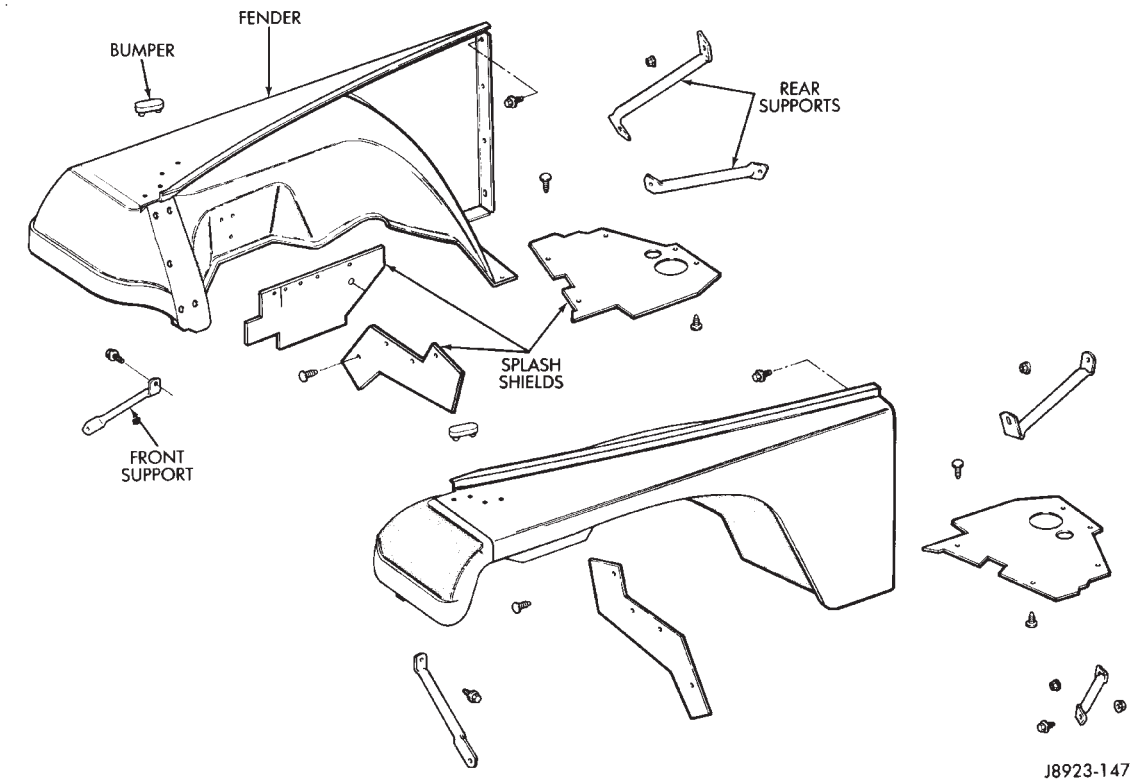

Fig. 4 Fender Components

REMOVAL

(1) As applicable, remove or disconnect all components attached to the fender inner panel.

(2) Left fender:

• Remove the air cleaner housing and support bracket from the fender inner panel (Fig. 5 and 6).

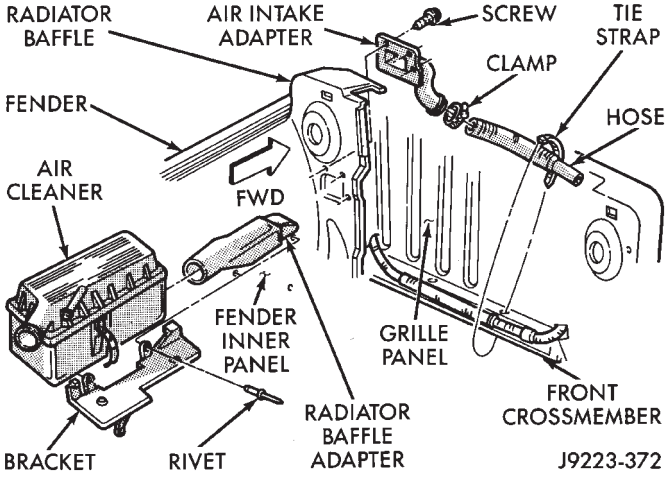

Fig. 5 Air Cleaner Housing and Radiator Baffle Adapter Fender

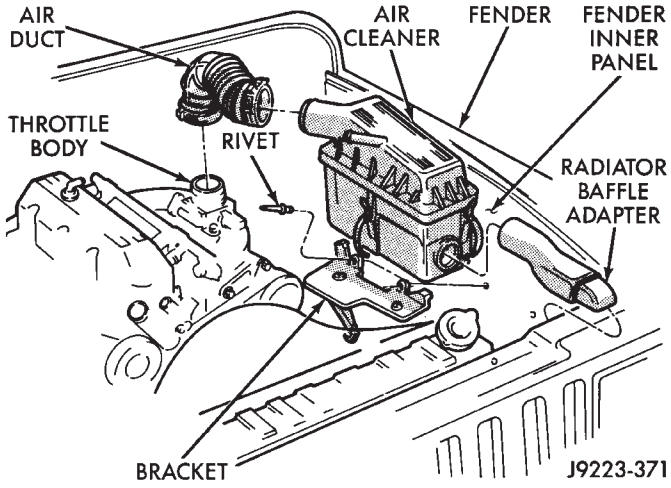

Fig. 6 Air Cleaner Housing and Support Bracket

• Remove the horn from the fender inner panel (Fig. 7).

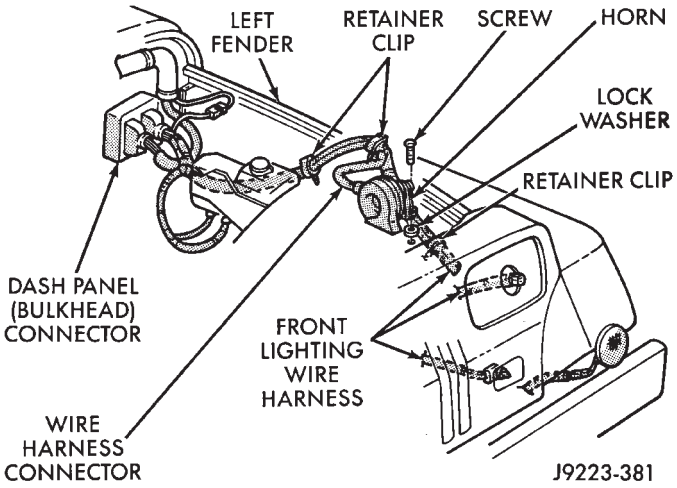

Fig. 7 Horn Removal/Installation

• Remove the windshield washer fluid reservoir and coolant reserve bottle from the fender inner panel (Fig. 8 and 9).

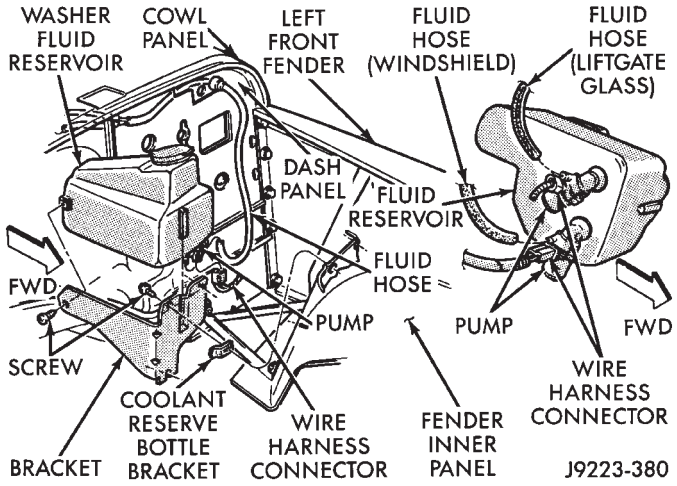

Fig. 8 Windshield Washer Fluid Reservoir

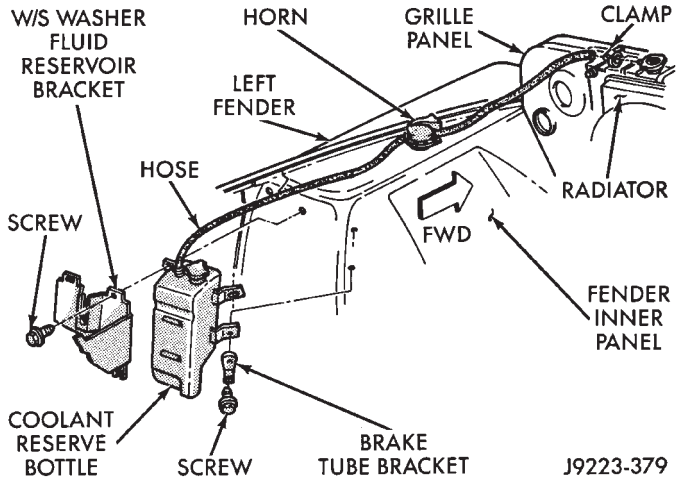

Fig. 9 Coolant Reserve Bottle

(4) Right fender:

• Remove the jack and related tools from the jack storage tray (Fig. 10).

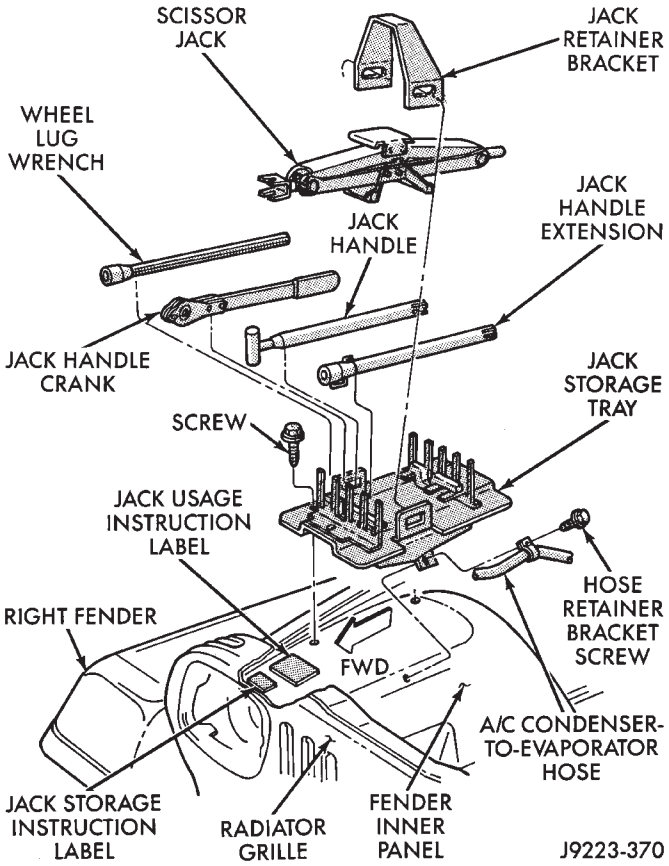

Fig. 10 Jack and Related Tools

• Remove the jack storage tray and A/C receiver/drier from the fender inner panel (Fig. 11).

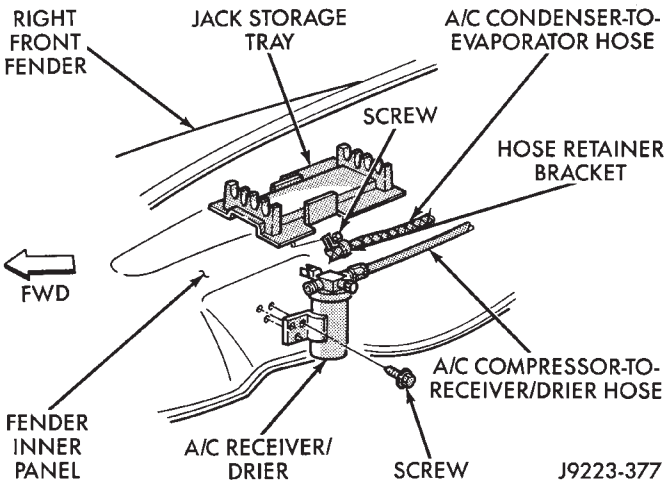

Fig. 11 Jack Storage Tray and A/C Receiver/Drier

• Remove the radio antenna (if equipped) from the fender outer panel (Fig. 12 and 13).

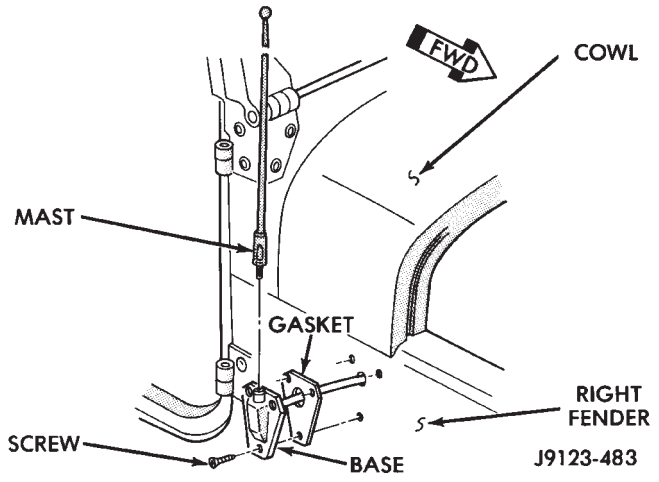

Fig. 12 Radio Antenna

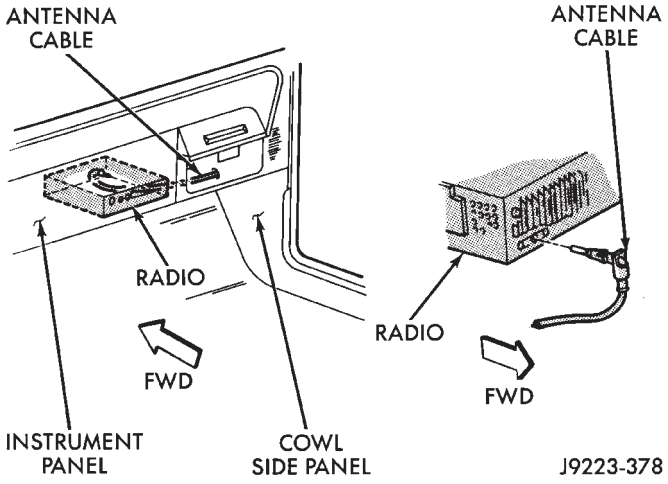

Fig. 13 Radio Antenna Cable

(5) Disconnect the side marker lamp wire harness bulb socket and the hood holddown clamp (Fig. 14).

(6) Remove the screws that attach the battery tray support brackets to the right fender inner panel.

(7) Remove the fender front attaching bolts/nuts and brackets from the grille panel (Fig. 15).

(8) Remove the splash shields from the fender.

(9) Remove the bolts that attach the fender and rear supports to the cowl panel (Fig. 15).

(10) Pull the fender outward and lift it from the vehicle.

INSTALLATION

(1) Position the fender and rear support brackets at the vehicle body and install the attaching washers and bolts (Fig. 15). Tighten the bolts and nuts to 18 N·m (156 in-lbs) torque.

(2) Install the fender front attaching bolts/nuts. Tighten the bolts and nuts to 18 N·m (156 in-lbs) torque.

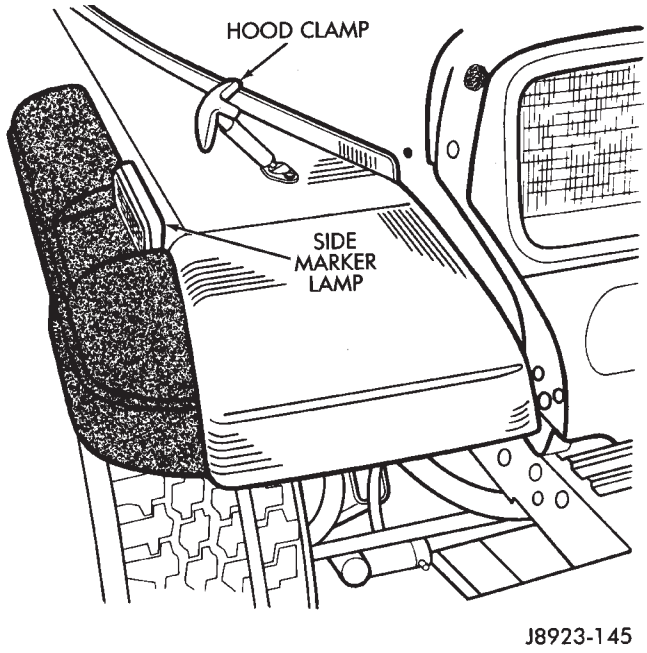

Fig. 14 Hood Holddown Clamp and Side Marker Lamp

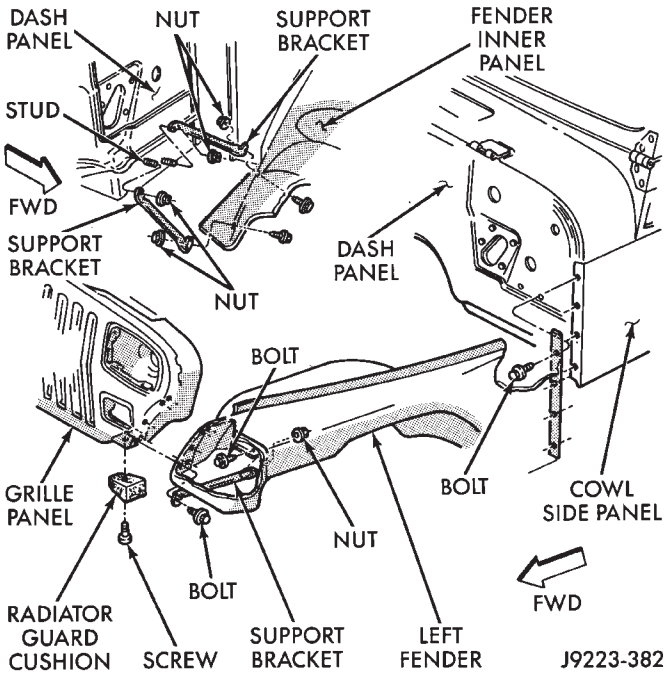

Fig. 15 Fender Front and Rear Attaching Bolts/Nuts

(3) Install the splash shields with the serrated retainers (Fig. 16).

(4) Install the battery tray support bracket-to-right fender inner panel screws. Tighten the screws to 18 N·m (156 in-lbs) torque.

(5) Connect the side marker lamp wire harness connector and the hood holddown clamp.

(6) Connect the radio antenna, if equipped.

(7) Install/connect all the components removed/disconnected from the fender inner panel.

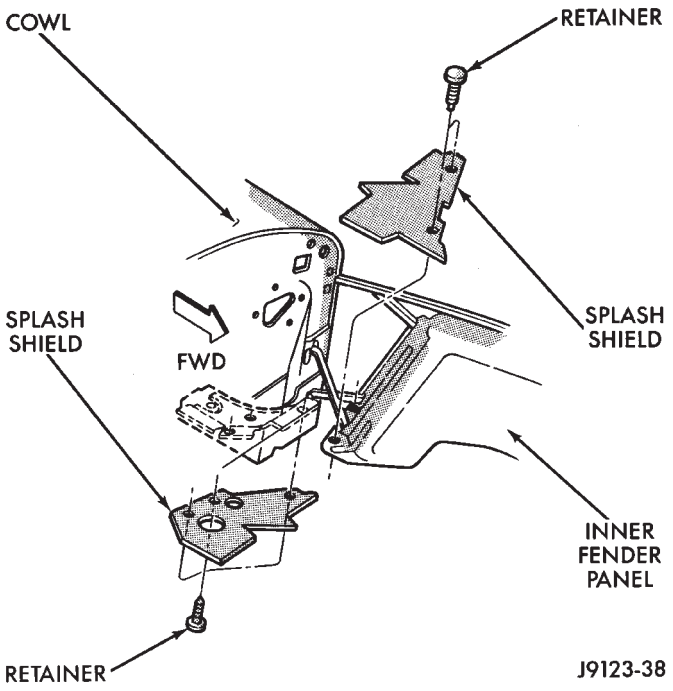

Fig. 16 Fender Splash Shields

(8) Left fender:

- Install the air cleaner housing and support bracket on the fender inner panel.
- Install the horn on the fender inner panel.
- Install the windshield washer fluid reservoir and coolant reserve bottle on the fender inner panel.

(9) Right fender:

- Install the jack storage tray and A/C receiver/drier on the fender inner panel.
- Install the jack and related tools in the jack storage tray (Fig. 17).

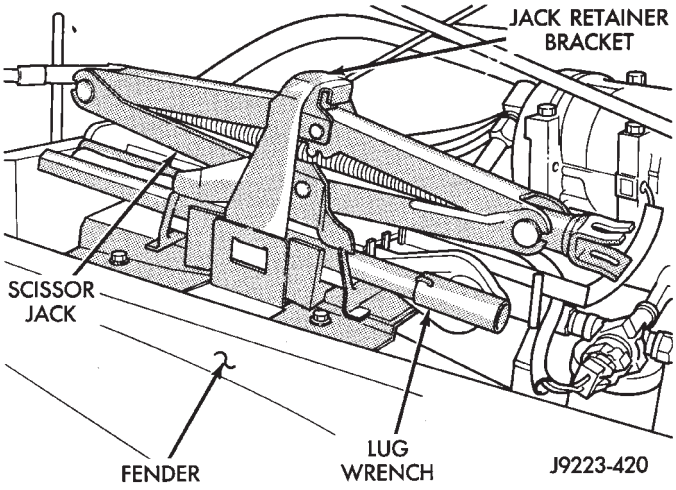

Fig. 17 Jack Installation

FENDER FLARE—YJ

REMOVAL

(1) Remove the side marker lamp lens and disconnect the wire harness bulb socket.

(2) Remove the serrated retainers, screws and plastic nuts that attach the flare to the front fender or rear wheelhouse (Fig. 18 and 19).

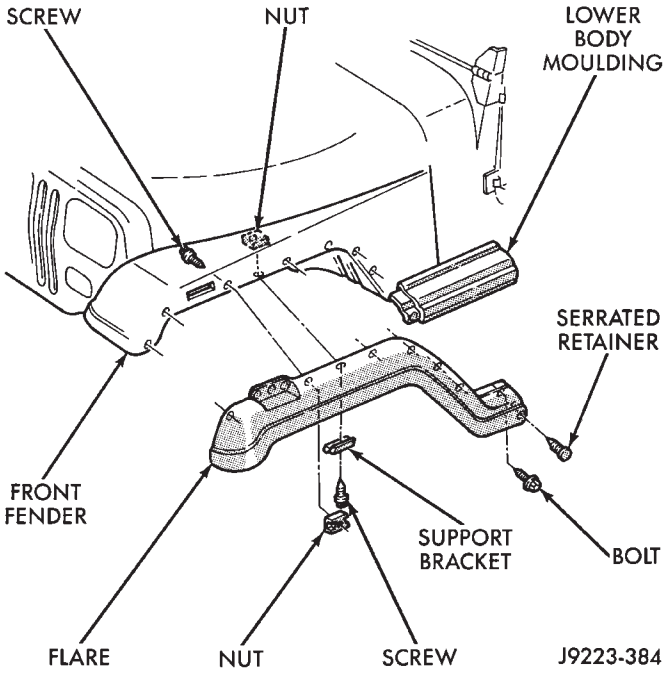

Fig. 18 Front Fender Flare and Side Step Molding

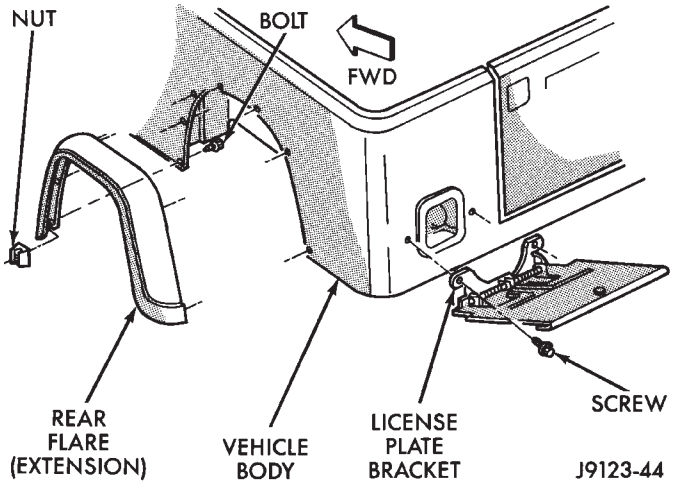

Fig. 19 Rear Flare and license Plate Bracket

(3) Remove the flare and clean the contact surface on the body.

(4) Inspect the flare serrated retainers and plastic nuts. Replace any hardware that is loose or damaged.

INSTALLATION

(1) Clean the contact surface on the flare and position it on the front fender or wheelhouse.

(2) Install the flare serrated retainers, screws and nuts. Tighten the screw at the lower molding to 11 N·m (96 in-lbs) torque. Tighten the upper screws to 11 N·m (96 in-lbs) torque.

BODY SIDE STEP MOLDING—YJ

REMOVAL/INSTALLATION

The body side moldings are attached to the step supports and to the body side panels (Fig. 20).

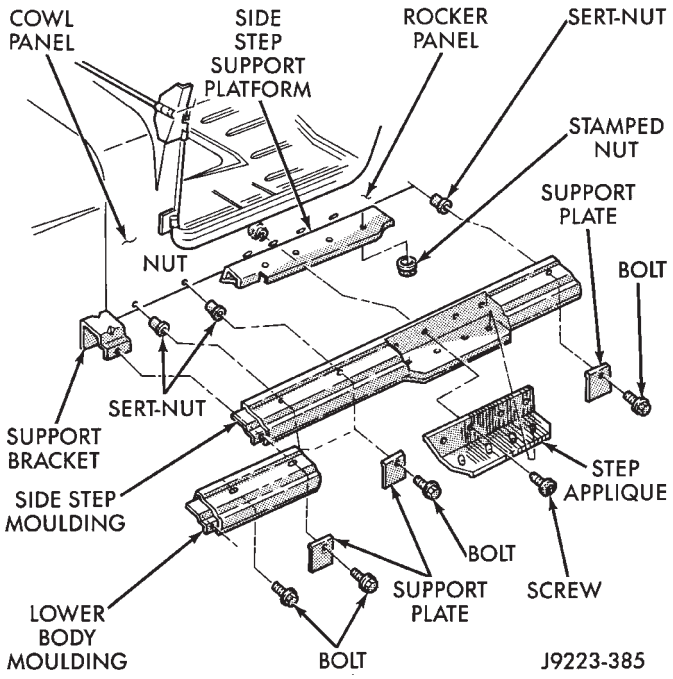

Fig. 20 Side Step Support Platform and Molding/ Applique

(1) It is necessary to loosen the fender flare retaining screws (Fig. 18 and 19) before removing the lower body and step moldings.

(2) Remove the retaining bolts and the lower body molding from the support bracket and cowl side panel (Fig. 20).

(3) Remove the retaining bolts/screws, the applique and the side step molding from the cowl side panel/ rocker panel (Fig. 20).

(4) If necessary, remove the retaining bolt/screws and the support bracket and side step support platform from the cowl side panel/rocker panel (Fig. 21).

INSTALLATION

(1) If removed, install the support bracket and side step support platform on the cowl side panel/rocker panel. Install and tighten the support bracket retaining bolt to 11 N·m (96 in-lbs) torque. Install and tighten the support platform retaining screws to 41 N·m (30 ft-lbs) torque.

(2) Install the side step molding and applique on the cowl side panel/rocker panel. Install and tighten the molding retaining bolts to 11 N·m (96 in-lbs) torque. Install and tighten the applique retaining screws to 41 N·m (30 ft-lbs) torque.

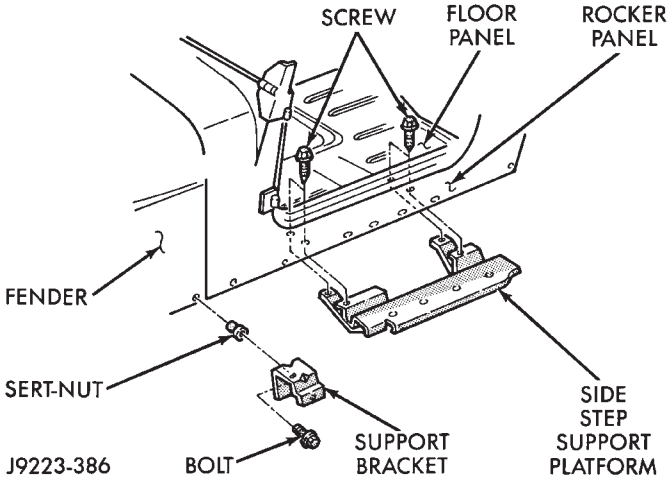

Fig. 21 Side Step Support Platform and Support Bracket

(3) Install the lower body molding on the support bracket and cowl side panel with the retaining bolts. Tighten the molding retaining bolts to 11 N·m (96 in-lbs) torque.

(4) Tighten the fender flare retaining screws to 11 N·m (96 in-lbs) torque.

WHEELHOUSE SPLASH LINERS—YJ

REMOVAL

(1) Remove the liner attaching screws (Fig. 22).

(2) Remove the rivets that attach the liner to the wheelhouse (Fig. 22).

(3) Remove the rivets that attach the liner rear splash shield to the rear crossmember.

(4) Remove the liner from the wheelhouse.

(5) Remove the rivets that attach the rear splash shield to the wheelhouse liner.

INSTALLATION

(1) Attach the rear splash shield to the wheelhouse liner with rivets.

(2) Position the liner in the wheelhouse.

(3) Install the screws and rivets to attach the liner to the wheelhouse.

(4) Install the rivets to attach the rear splash shield to the crossmember.

FENDER SPLASH APRONS—YJ

REMOVAL

(1) Remove the splash apron attaching screws (Fig. 22).

(2) Remove the aprons from the fender well (Fig. 22).

INSTALLATION

(1) Position the aprons in the fender well (Fig. 22).

(2) Install the screws to attach the splash aprons to the fender well.

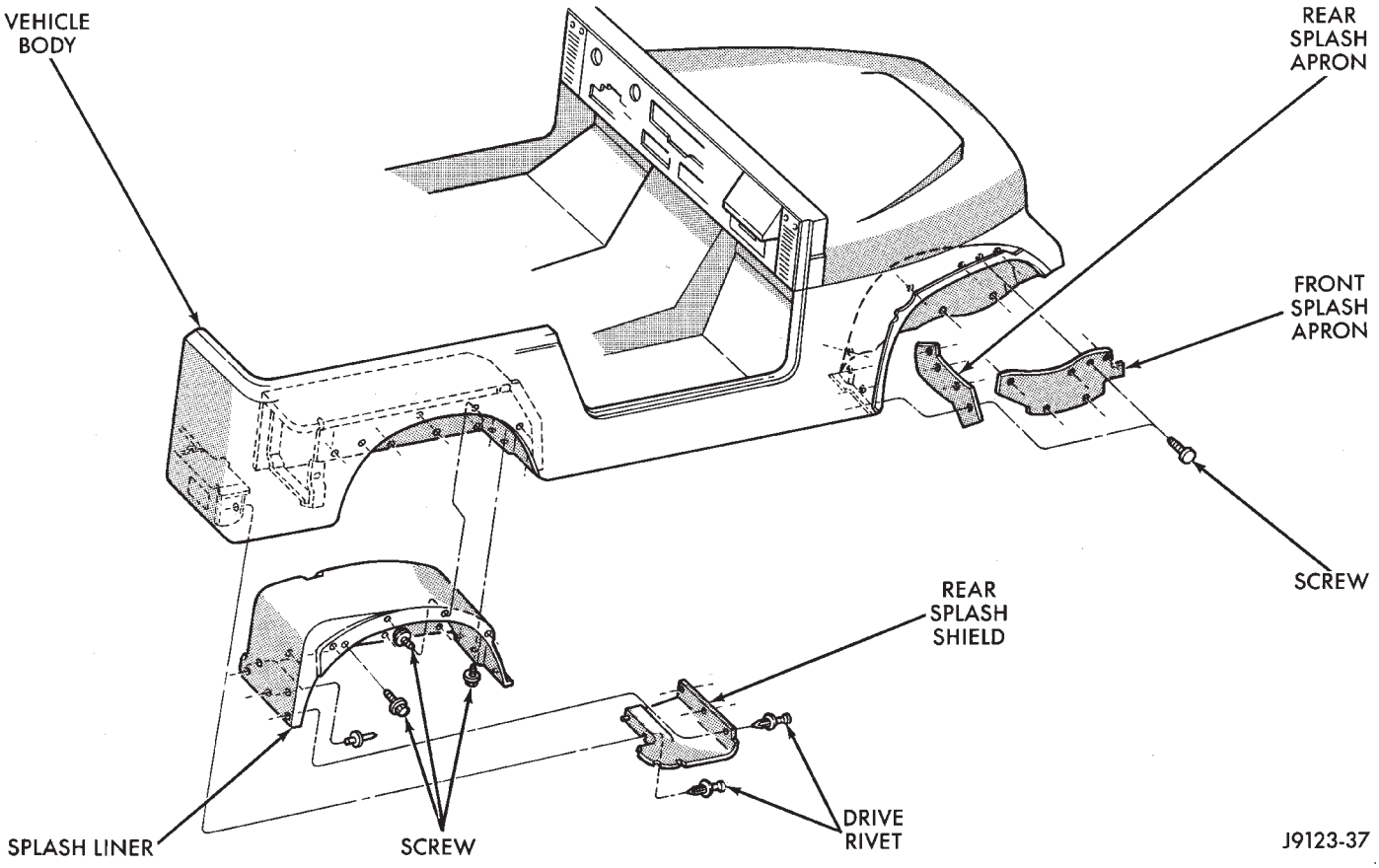

Fig. 22 Wheelhouse Liner, Splash Shield and Splash Aprons

FENDER INNER SPLASH SHIELDS—YJ

REMOVAL

(1) Remove the splash shield retainers from the cowl panel and inner fender panel (Fig. 23).

(2) Remove the splash shields from the inner fender and cowl panel (Fig. 23).

INSTALLATION

(1) Position the splash shields on the inner fender panel rear flange and on the cowl panel extension.

(2) Install the splash shield retainers.

BODY STRIPES/DECALS—YJ

YJ body stripes and decals are durable tape stripes/decals with a adhesive backing.

REPAIR

Small nicks, scratches can be touched-up with paint. A correct color match can be obtained by blending small amounts of appropriate paint colors.

To eliminate blisters and air bubbles in a body stripe/decal, pierce them with a needle or pin. Force the trapped air out of the hole.

A heat gun can also be used to remove small wrinkles and irregularities in a stripe/decal.

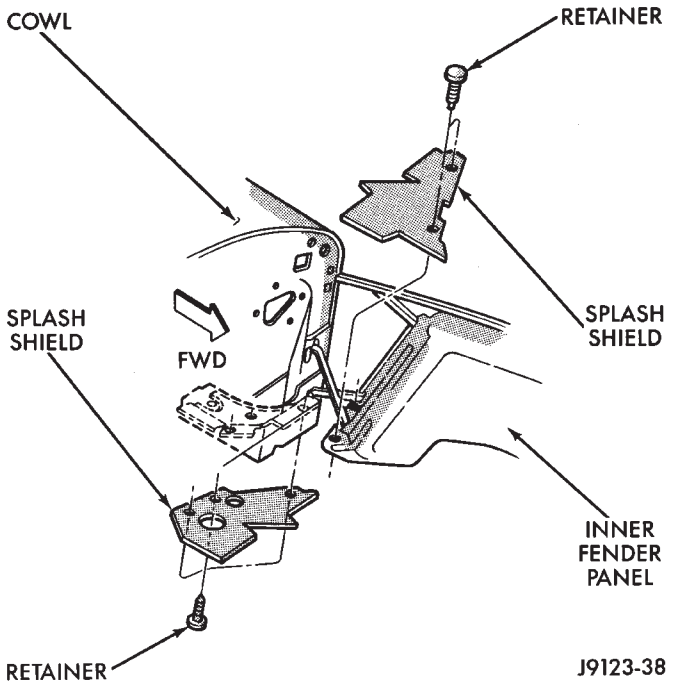

Fig. 23 Fender Inner Splash Shields

REQUIREMENTS

Body stripe/decal replacement because of collision damage requires that the metal repair and paint refinish be completed first.

The work area temperature should be between 18°C (65°F) and 32°C (90°F). **A tape stripe/decal should not be replaced if the work area temperature is less than 18°C (65°F).**

The following equipment and material are necessary for body stripe/decal removal and installation:

- Commercial tape stripe/decal removal solution.
- Commercial adhesive removal solution.
- Liquid dish detergent (for the wetting solution).
- Mixture of wetting solution.
- Commercial wax and silicone removal solution.
- Isopropyl (rubbing) alcohol.
- Small squeegee (plastic or hard rubber).
- Water bucket and sponge.
- Clean wiping rags or paper towels.
- Heat gun (or infra-red heat bulb).
- Wax pencil.
- Sharp knife, single edge razor blade or X-acto knife.
- Pair of scissors.
- Needle or pin.

A wetting solution assures a better bond between the painted surface of the body and the tape stripe/decal. Prepare a supply of wetting solution by mixing two or three teaspoons of dish detergent with 1 gallon of water. **Do not use soap.**

Too much detergent will reduce the effectiveness of the mixture.

REMOVAL

The key to successful tape stripe/decal removal is to apply heat to area and slowly peel stripe/decal from panel.

(1) Clean the repaired surface, adjacent panels and door openings as necessary.

(2) Start at one end of the tape stripe/decal and apply heat with a heat gun. Slowly peel the stripe/decal from the panel by pulling it back. **Do not pull the tape stripe/decal outward from the panel.**

WARNING: USE THE TAPE STRIPE/DECAL REMOVAL SOLUTION IN A WELL-VENTILATED AREA ONLY.

(3) A commercial tape stripe/decal removal solution can be used for stripe/decal removal at areas where a heat gun is ineffective:

- mask-off the body panel area surrounding the tape stripe/decal (Fig. 1).
- Move the removal solution spray back and forth across the complete length of the stripe/decal with a smooth, steady motion.
- Ensure that the complete stripe/decal is covered with the solution.
- Allow the stripe/decal removal solution to remain on the stripe/decal for 20 minutes.

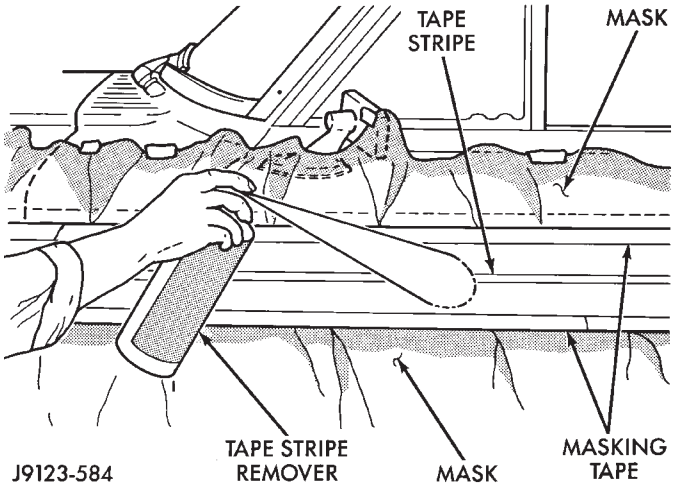

Fig. 1 Stripe/Decal Removal Solution Application

- After 20 minutes, peel stripe/decal away from the flange and, starting at a corner, peel the stripe/decal from the body (Fig. 2).

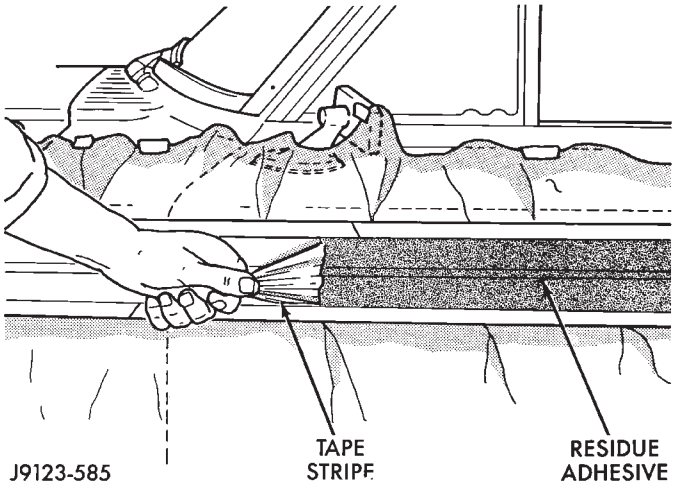

Fig. 2 Body Stripe/Decal Removal

- If there is difficulty with peeling stripe/decal away from body use a squeegee for stripe/decal removal (Fig. 3).
- With the stripe/decal removed, scrape all the stripe/decal removal solution from the panel surface before proceeding.

WARNING: USE THE ADHESIVE REMOVAL SOLUTION IN A WELL-VENTILATED AREA ONLY.

(4) After the stripe/decal is removed, remove any adhesive remaining on body with a removal solution.

(5) After 3 to 5 minutes, use a squeegee to remove adhesive (Fig. 4).

(6) Remove the masking tape and mask from the panel.

(7) Wipe the panel with a cloth with a general purpose cleaning solution.

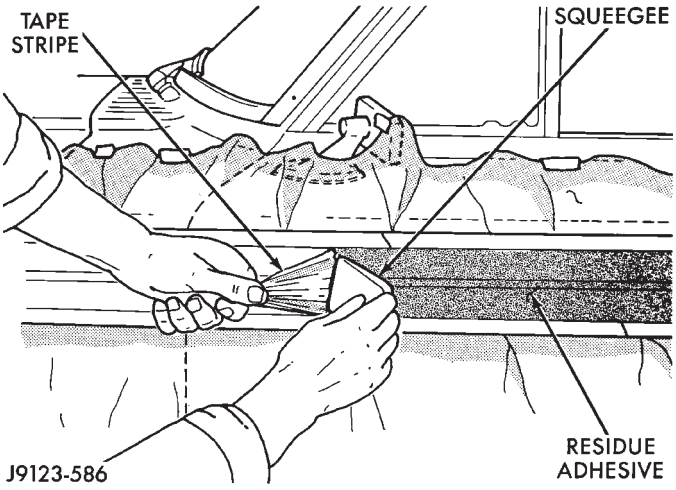

Fig. 3 Body Stripe/Decal Removal With A Squeegee

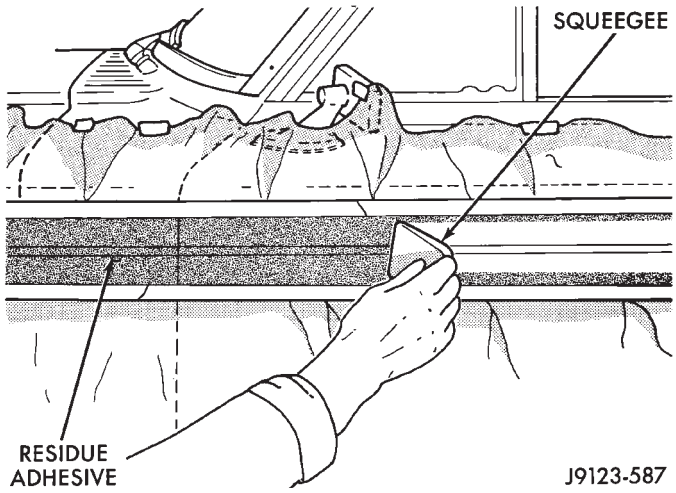

Fig. 4 Adhesive Removal With A Squeegee

BODY PANEL SURFACE PREPARATION

(1) The area that will be covered by the tape stripe/decal must be cleaned with an cleaning solution to remove any residue paint.

(2) Freshly painted surfaces must be thoroughly dry.

(3) Clean painted surface with a commercial wax and silicone removal solution. Wipe surface with a clean cloth and allow to dry.

REPLACEMENT ON ONE PANEL

For large tape stripes/decals, use a clean sponge and apply ample wetting solution to the adhesive side of the tape stripe/decal, and to the painted panel surface.

The wetting solution will permit ease of tape stripe/decal movement when positioning it on the panel.

(1) Align a straight edge with the existing tape stripe/decal ends and use a wax pencil to mark a line on the panel (Fig. 5).

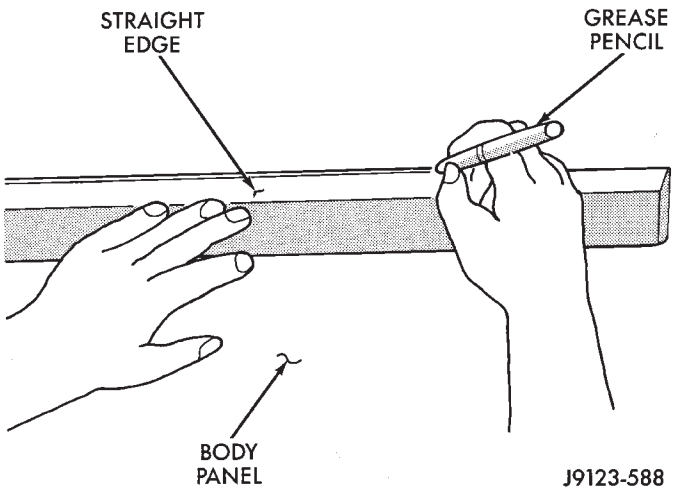

Fig. 5 Stripe/Decal Alignment Reference Mark

If applicable, the body panel character line can be used as the tape stripe/decal alignment reference.

(2) Position tape stripe/decal and carrier on panel and mark the required length with a wax pencil.

(3) Cut the stripe/decal and carrier at the required length with scissors.

(4) Position stripe/decal and carrier on panel and hold it in-place with pieces masking tape (Fig. 6).

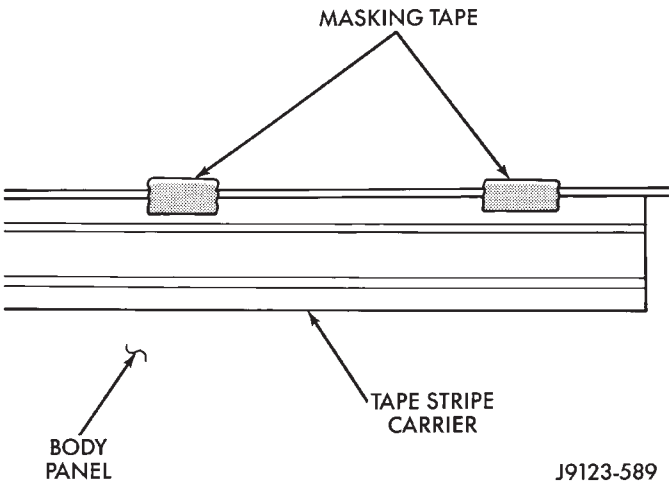

Fig. 6 Tape Stripe/Decal and Carrier Retained On Body Panel

(5) Lift the bottom edge of the tape stripe/decal and carrier, use the tape sections as hinges, and reverse the position of the stripe/decal and carrier (Fig. 7).

CAUTION: Always remove the carrier from the tape stripe/decal, never remove the tape stripe/decal from the carrier.

(6) Bend a corner of the carrier outward, separate the corner of the carrier from the tape stripe/decal.

(7) Separate approximately 15 cm (6 in) of the carrier from one end of the tape stripe/decal (Fig. 8).

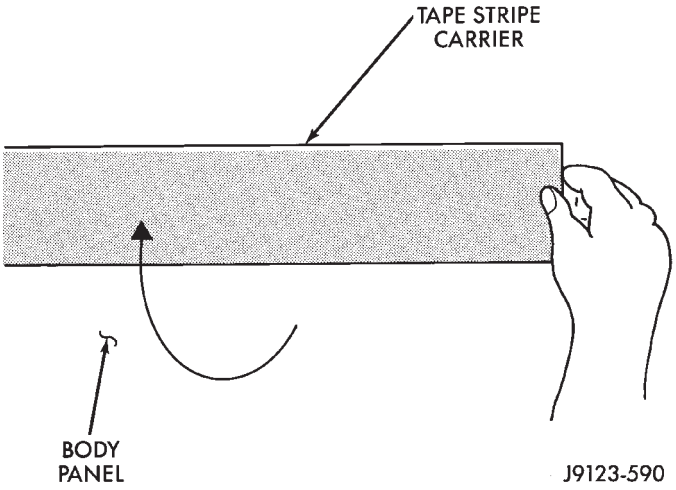

Fig. 7 Tape Stripe/Decal and Carrier Reversed On Body Panel

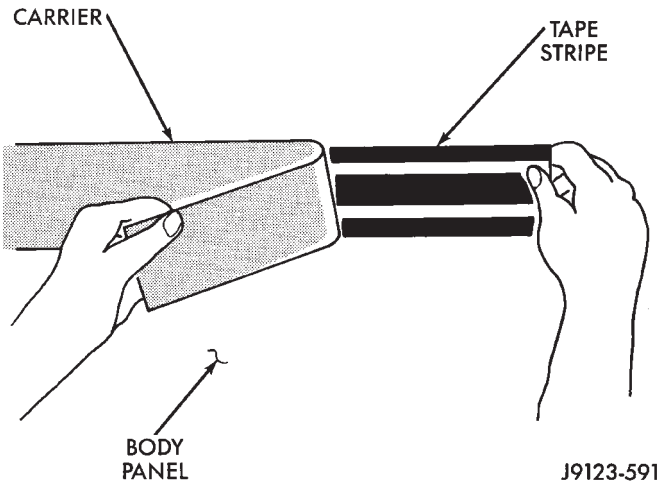

Fig. 8 Tape Stripe/Decal and Carrier Separated

(8) Return the tape stripe/decal back to its original position. If a wetting solution is used, position the adhesive side of the tape stripe/decal on the panel. Apply wetting solution to the outside of the tape stripe/decal. Use firm strokes with a squeegee to adhere the tape stripe/decal to the body.

(9) Hold tape stripe/decal firmly against the panel surface while separating the carrier from the tape stripe/decal (Fig. 9).

(10) Where applicable, extend the tape stripe/decal 12 mm (1/2 in) beyond the door edge. Next, wrap it around on the flange and adhere it to the door flange (Fig. 10). **Use care to avoid trapping air under the tape stripe/decal.**Where necessary, trim excess tape stripe/decal.

(11) If applicable, remove the cover from the face of the tape stripe/decal.

(12) Inspect tape stripe/decal with reflected light to check for defects that could have developed during the installation process. Remove all air and/or moisture bubbles.

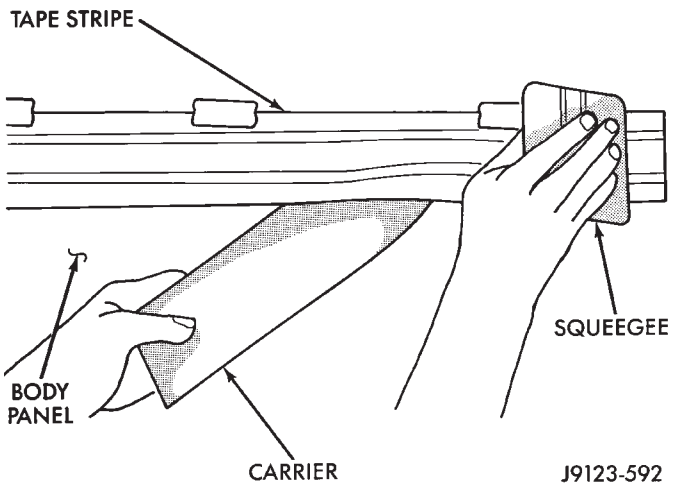

Fig. 9 Tape Stripe/Decal Installation

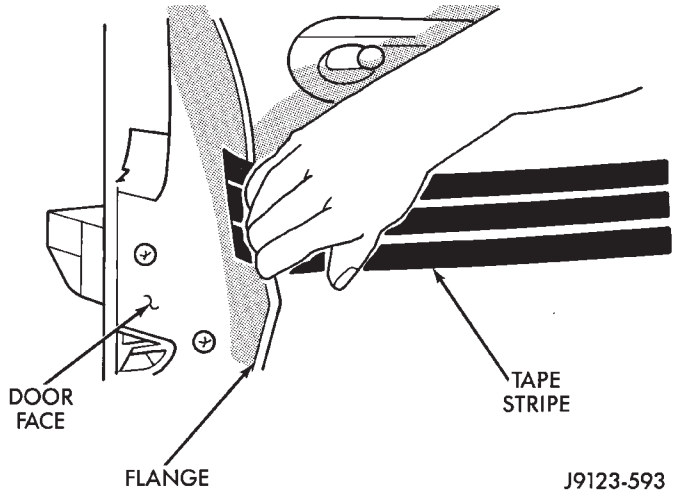

Fig. 10 Tape Stripe/Decal Installation On Door Flange

COMPLETE REPLACEMENT

The following procedure will simplify installation of a complete or large section(s) of tape stripe/decal on a vehicle (Fig. 11 and 12).

(1) Place the tape stripe/decal on a clean, flat surface with the carrier side facing upward.

(2) Bend a corner of the carrier inward, and separate the corner of the carrier from the tape stripe/decal.

CAUTION: Hold tape stripe/decal at extreme outer edges of the corners while separating the carrier.

(3) Hold tape stripe/decal firmly against the flat surface and separate the carrier from the tape stripe/decal.

If hot and humid, a slight jerking motion will aid separating the carrier from the tape stripe/decal.

(4) Use a clean sponge and apply ample wetting solution to the tape stripe/decal adhesive and to the

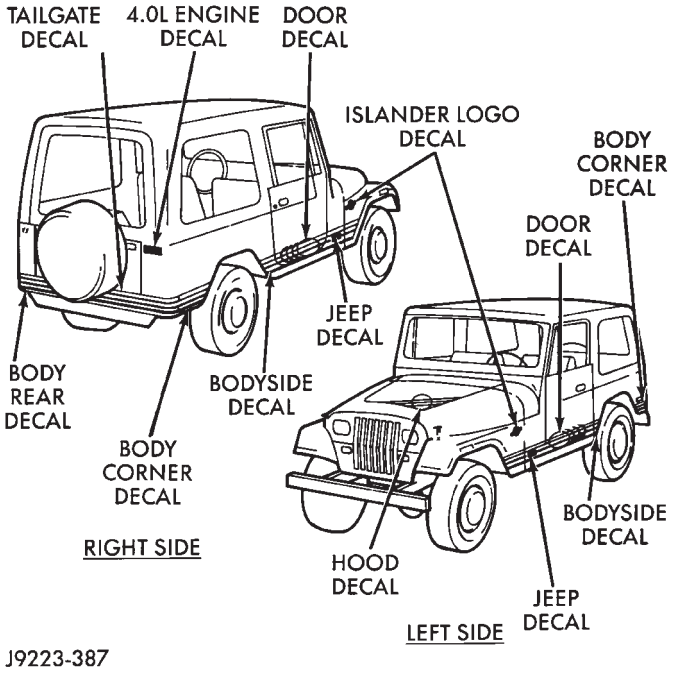

Fig. 11 Islander Decals

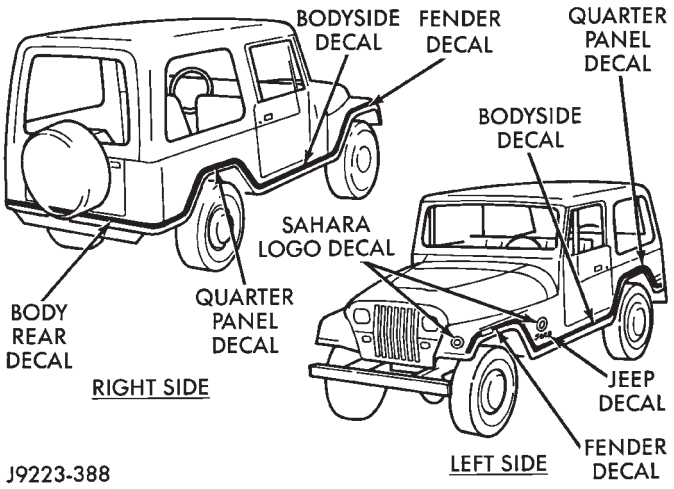

Fig. 12 Sahara Decals

painted panel surface. The solution will permit ease of tape stripe/decal movement when positioning it on the panel.

(5) Position adhesive-coated side of tape stripe/decal on the panel with the bottom aligned with character line. Where applicable:

- align the end of the replacement tape stripe/decal with the end of the existing tape stripe/decal, and correctly align the index darts and index notches.

(6) If a complete replacement tape stripe/decal is not being installed:

- Position the replacement tape stripe/decal section at the center of the repair area.
- Align it with the existing tape stripe/decal and allow at least 12 mm (1/2 in) of the tape stripe/decal section to overlap the existing tape stripe/decal edges.

(7) Apply wetting solution to the outer side of the tape stripe/decal to allow the squeegee to freely slide while adhering the stripe/decal to the panel.

CAUTION: Avoid unnecessary pulling and stretching at the ends of the tape stripe/decal because this could cause it to tear.

(8) Position and slide a squeegee from the center to the ends of the tape stripe/decal. This will ensure complete bonding of the tape stripe/decal to the painted panel surface.

(9) If a wrinkle is trapped in the tape stripe/decal during the squeegee operation, stop. Lift wrinkled area and re-align stripe/decal with panel character line. **Do not lift the tape stripe/decal if only a few air bubbles exist.**

(10) Where applicable, allow 12 mm (1/2 in) extra tape stripe/decal to extend beyond the edges to be folded over.

(11) Fold the excess tape stripe/decal back onto inside flange area. **Use care to avoid trapping air under the tape stripe/decal.**Where necessary, trim excess tape stripe/decal.

(12) Inspect tape installation with reflected light to detect any defects that could have developed during the installation.

(13) Remove all air and moisture bubbles from the tape stripe/decal with a needle or pin.

(14) Install any removed components and clean the vehicle as necessary.

EXTERIOR NAMEPLATES (ADHESIVE-BACKED)—YJ

All of the YJ exterior nameplates (Fig. 13) are attached to the vehicle panels with adhesive.

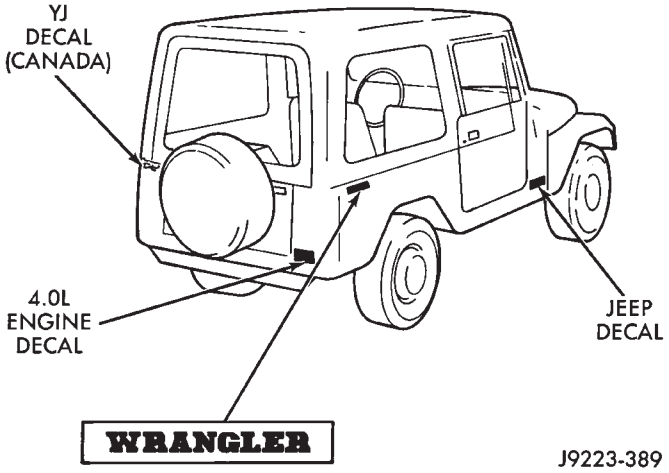

Fig. 13 YJ Nameplate Decals

REMOVAL/INSTALLATION

(1) With the use of a putty knife, carefully pry the nameplate from the body outer panel.

(2) Clean the panel surface.

(3) Position the replacement nameplate on the panel and apply inward force to seat it.

FUEL FILLER PROTECTOR/NOZZLE—YJ

REMOVAL

(1) Either remove it or support the license plate bracket away from the fuel filler protector and nozzle (Fig. 1).

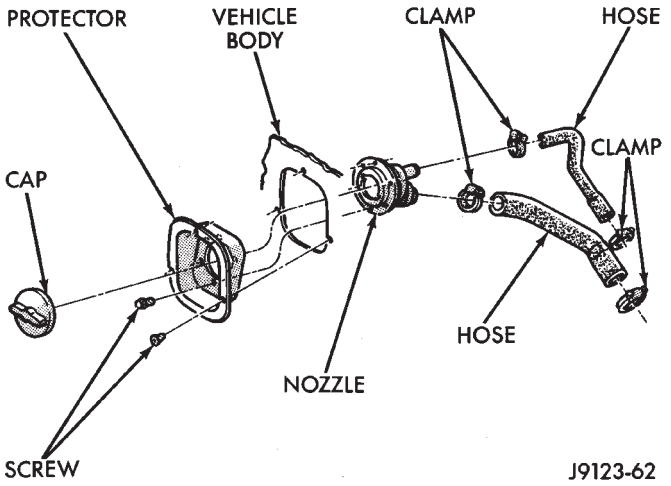

Fig. 1 Fuel Filler Cap, Protector, Nozzle and Hoses

(2) Remove the cap from the nozzle.

(3) Loosen the clamps at the nozzle and separate the hoses from the nozzle.

(4) Remove the screws that attach the protector to the body panel.

(5) Remove the protector and nozzle from the opening in the body.

(6) Remove the screws and separate the nozzle from the protector (Fig. 1).

INSTALLATION

(1) Position the fuel filler nozzle on the protector and install screws. Tighten the screws to 2 N·m (20 in-lbs) torque.

(2) Position the protector and the nozzle in body panel opening, and install. Tighten the screws to 3 N·m (25 in-lbs) torque.

(3) Attach the hoses to the tubes and tighten the clamp screws to 3 N·m (30 in-lbs) torque.

(4) Install the cap on the nozzle.

(5) If removed, install the license plate bracket.

HALF METAL DOOR MIRROR (EXTERNAL)—YJ

REMOVAL

(1) Remove the mirror base attaching screws from the door hinge (Fig. 2).

(2) Remove the mirror from the door hinge (Fig. 2).

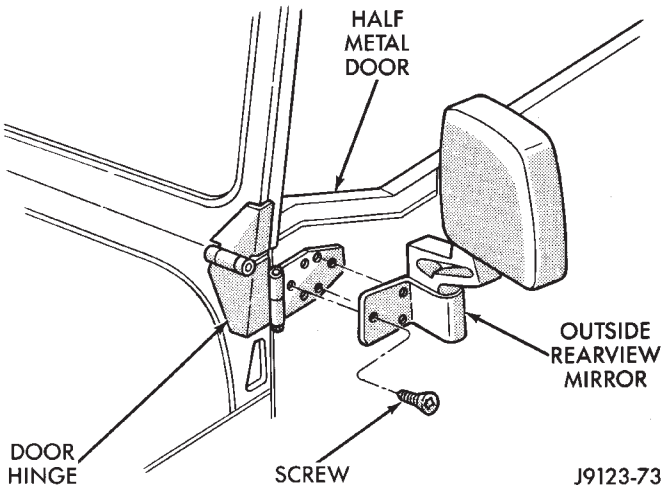

Fig. 2 Half Metal Door Mirror

INSTALLATION

(1) Clean the door hinge-mirror base contact surface.

(2) Position the mirror base at the door hinge.

(3) Install the mirror base attaching screws in the door hinge. Tighten the attaching screws to 11 N·m (96 in-lbs) torque.

TAILGATE—YJ

REMOVAL

(1) Remove the tailgate hinge screws with a Torx bit (Fig. 3).

(3) Disengage the latch and remove the tailgate from the vehicle.

INSTALLATION

(1) Position and align the tailgate in the body opening and engage the latch.

(2) Install the hinge retaining screws. Tighten the screws to 18 N·m (156 in-lbs) torque.

TAILGATE HINGE—YJ

REPLACEMENT

(1) Remove the hinge retaining screws and remove the hinge (Fig. 3).

(2) Prepare and paint the replacement hinge to match the body paint color.

(3) Lubricate the hinge with spray lubricant.

(4) Position the hinge on the body and install the retaining screws (Fig. 3). Tighten the screws to 18 N·m (156 in-lbs) torque.

(5) Align the tailgate with the hinge and install the hinge-to-tailgate screws. Tighten the screws to 18 N·m (156 in-lbs) torque.

TAILGATE ADJUSTMENT—YJ

(1) Loosen the tailgate hinge-to-body screws (Fig. 3).

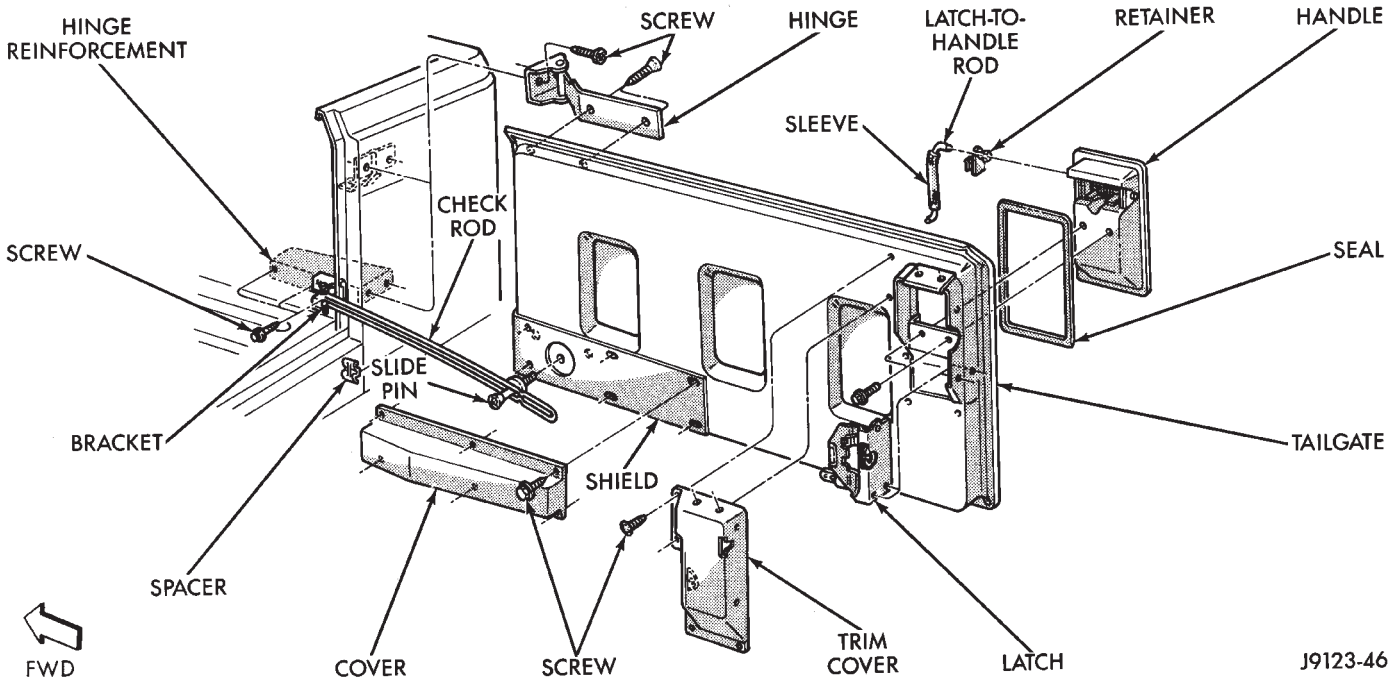

Fig. 3 Tailgate and Components

(2) Align the tailgate in the body opening and tighten the hinge screws to 18 N·m (156 in-lbs) torque.

TAILGATE LATCH AND RELEASE HANDLE—YJ

REMOVAL

(1) Open the tailgate and remove the latch trim cover (Fig. 3).

(2) Remove the tailgate latch-to-handle rod retainer and disconnect the rod from the latch (Fig. 3).

(3) Remove the latch-to-tailgate screws (Fig. 3).

(4) Remove the retainer clip from the latch-to-lock cylinder rod and disconnect the rod from the lock cylinder (Fig. 4).

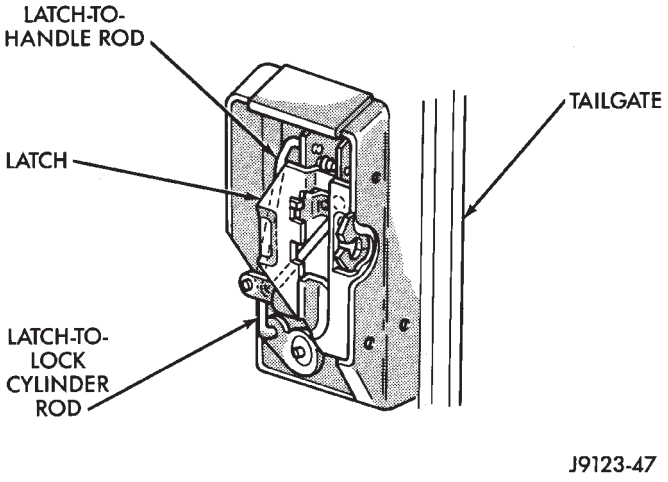

Fig. 4 Tailgate Latch and Rods

(5) Remove the retainer clip from the latch-to-release handle rod and disconnect the rod from the release handle (Fig. 4).

(6) Remove the latch from the tailgate.

(7) Remove the latch release handle screws.

(8) Remove the release handle and seal from the tailgate.

INSTALLATION

(1) Position seal latch release handle on the tailgate and install screws. Tighten the screws to 6 N·m (50 in-lbs) torque.

(2) Position the latch at the tailgate.

(3) Install the latch retaining screws and connect the latch rods and rod retainers (Fig. 4 and 5). Tighten the screws to 6 N·m (50 in-lbs) torque.

(4) Install the latch cover. Tighten the screws to 11 N·m (96 in-lbs) torque.

TAILGATE LOCK CYLINDER—YJ

REMOVAL

(1) Open the tailgate.

(2) Remove the latch cover.

(3) Remove the lock cylinder retainer clip (Fig. 6).

(4) Disengage the lock cylinder lever (Fig. 6) from the latch-to-lock cylinder rod.

(5) Remove the lock cylinder from the tailgate opening.

(6) Remove the E-clip and separate the lever from the lock cylinder (Fig. 6).

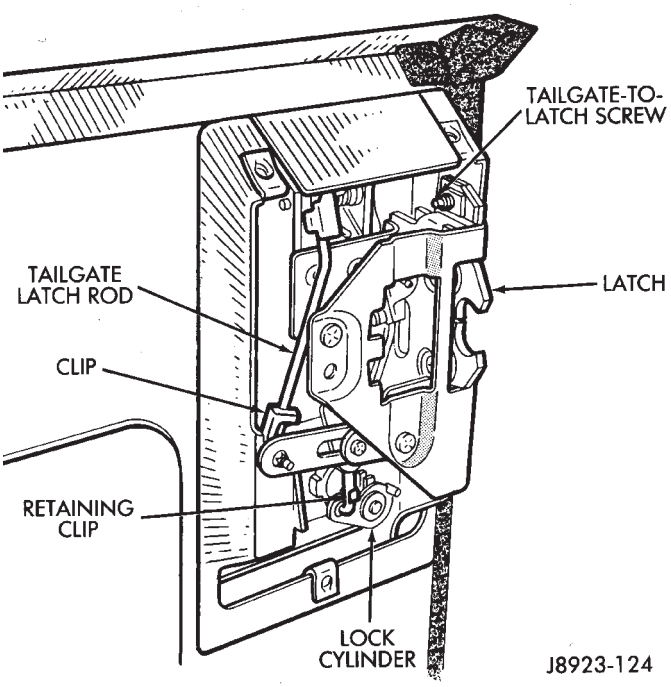

Fig. 5 Tailgate Latch Installation

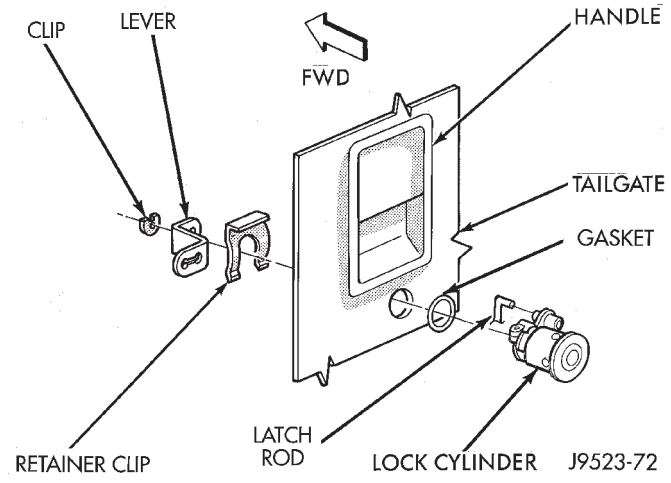

Fig. 6 Tailgate Lock Cylinder Removal/Installation

INSTALLATION

(1) Inspect the retainer clip and the gasket. As applicable, replace if distorted or damaged.

(2) Attach the lever to the lock cylinder with the E-clip and position the lock cylinder in the tailgate opening.

(3) Connect the latch-to-lock cylinder rod to the lever.

(4) Install the lock cylinder retainer clip.

(5) Install the latch cover. Tighten the screws to 11 N·m (96 in-lbs) torque.

TAILGATE LATCH STRIKER—YJ

REMOVAL

(1) Remove the striker from the bracket with a Torx bit (Fig. 7).

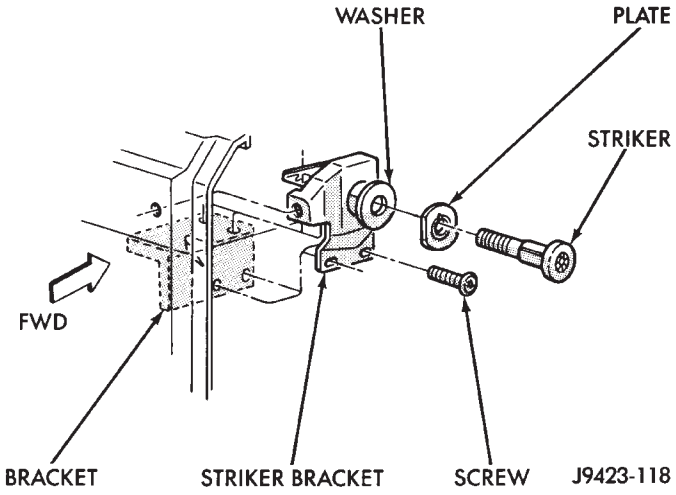

Fig. 7 Tailgate Latch Striker Removal/Installation

(2) Remove the plate, shim and washer from the bracket.

(3) Remove the retaining screws and the striker bracket from the tailgate reinforcement bracket (Fig. 7).

INSTALLATION

(1) Position the striker bracket on the tailgate and install the retaining screws in the reinforcement bracket. Tighten the screws to 11 N·m (96 in-lbs) torque.

(2) Position the washer, shim and plate on the striker bracket.

(3) Install the striker in the bracket with a Torx bit. Tighten the striker to 71 N·m (52 ft-lbs) torque while retaining the striker plate in-place.

TAILGATE WEATHERSTRIP SEAL—YJ

REMOVAL

(1) Remove the seal retaining rivets (Fig. 8).

(2) Carefully separate the seal and the retainers from the tailgate edge.

(3) If the original seal will be installed, clean it with a dampened cloth.

(4) Clean the seal contact surface on the tailgate (Fig. 8).

(5) Inspect the seal and retainers. Replace the seal if damaged.

INSTALLATION

(1) Apply weatherstrip adhesive around the perimeter of the seal contact surface on the tailgate edge (Fig. 8).

(2) Position the seal on the tailgate and press it against the inner panel and flange.

(3) Install the seal retaining rivets (Fig. 8).

CAUTION: Do not apply graphite, brake fluid or wax to the seal.

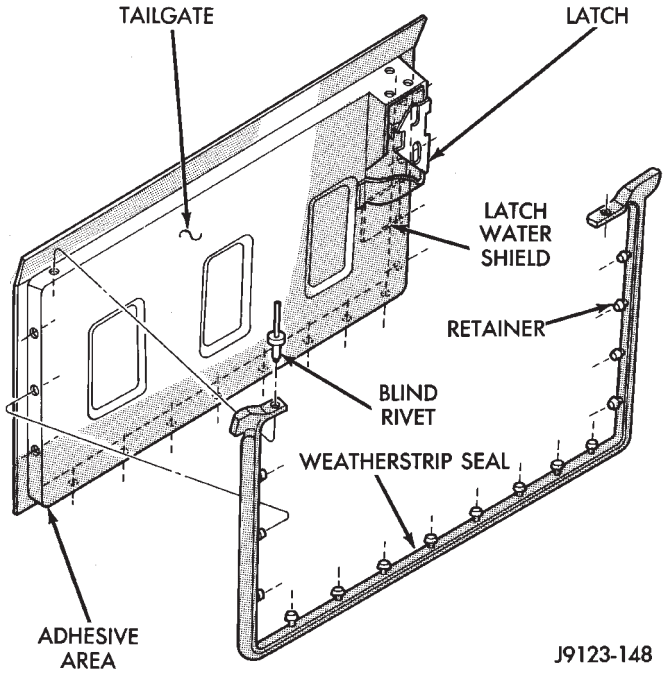

Fig. 8 Tailgate Weatherstrip Seal Removal/Installation

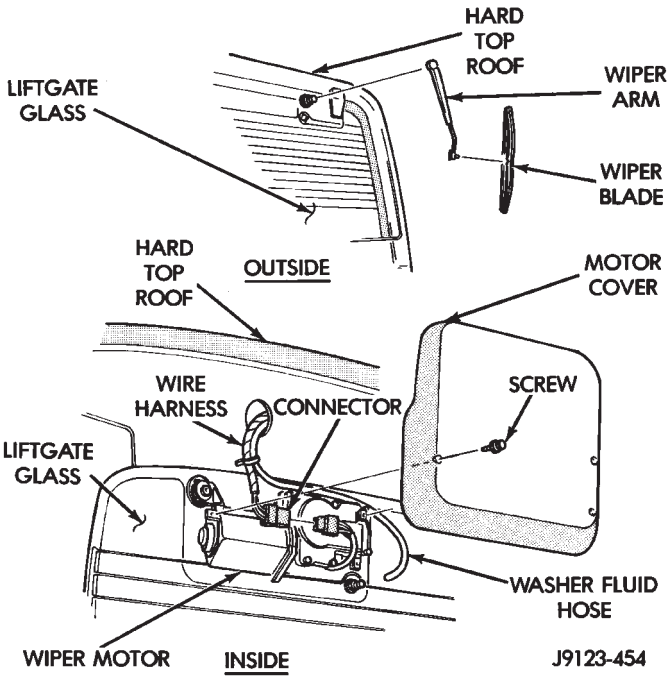

Fig. 1 Liftgate Wiper Motor

HARD TOP LIFTGATE GLASS—YJ

PORT ROD PISTONS ARE OPERATED BY HIGH PRESSURE GAS AND COULD CAUSE PERSONAL INJURY AND/OR VEHICLE DAMAGE IF THEY ARE REMOVED WITH THE PISTONS COMPRESSED (LIFTGATE CLOSED). ONCE REMOVED, DO NOT ATTEMPT TO DISASSEMBLE OR REPAIR THE SUPPORT RODS.

REMOVAL

(1) Disconnect the rear defroster/dome lamp wire harness connectors.

(2) Remove the wiper motor cover. Disconnect the wiper motor wire harness connector and the washer fluid hose (Fig. 1).

(3) Remove the wiper arm and blade (Fig. 1).

WARNING: DO NOT REMOVE THE LIFTGATE SUPPORT RODS WITH THE LIFTGATE CLOSED. THE SUP-

(4) Open the tailgate (Fig. 2).

(5) Remove the support rod cylinder retaining clips at both ends of each support rod cylinder (Fig. 2)

(6) Pull the support rods off the ball studs.

(7) Remove the liftgate glass hinge bolts (Fig. 2).

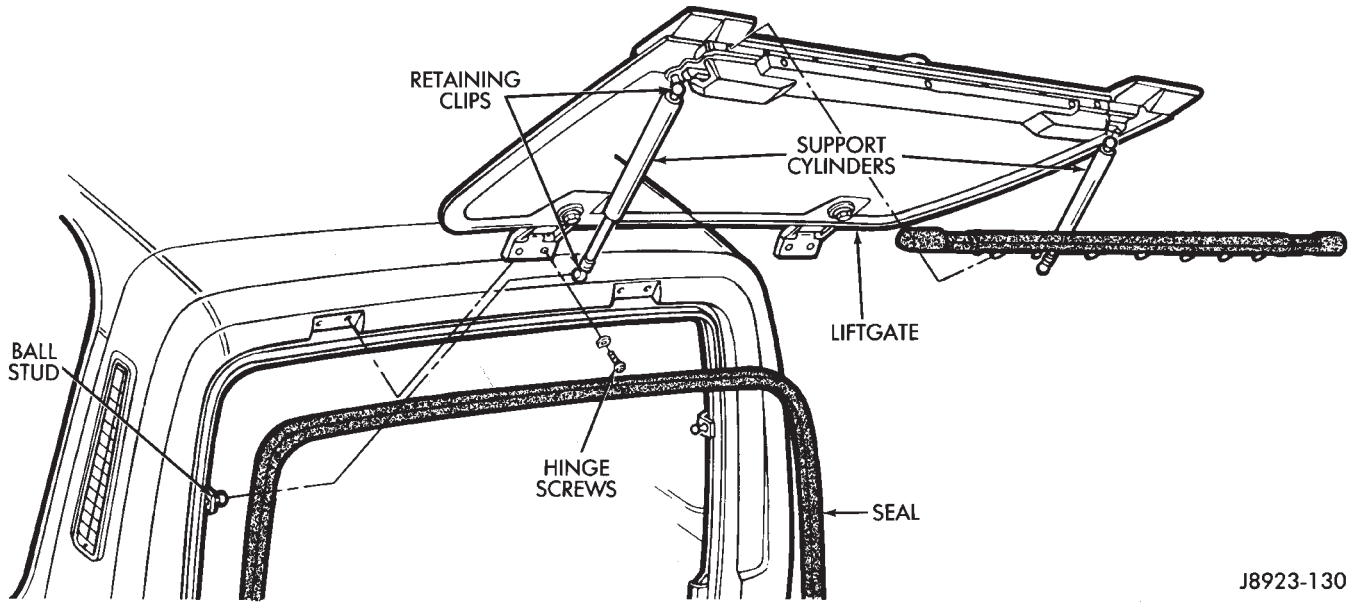

Fig. 2 Liftgate Removal/Installation

(8) Separate the liftgate glass from the hard top.

(9) Remove the weatherstrip seal (Fig. 2), if necessary.

INSTALLATION

(1) Assemble the liftgate components, if necessary

(2) Position the liftgate glass in the hard top opening and install the hinge bolts. Do not tighten the bolts.

(3) Adjust the liftgate glass to fit the hard top opening.

(4) Tighten the hinge bolts to 11 N·m (95 in-lbs) torque.

(5) Position the support rod cylinders on the ball studs.

(6) Install the support rod cylinder retainer clips.

(7) Connect the wiper motor wire harness connector and the washer fluid hose. Install the wiper motor cover (Fig. 1).

(8) Install the wiper arm and blade.

(9) Connect the rear window defroster/dome lamp wire harness connectors.

DISASSEMBLY

(1) Remove retaining screws and the lower, inner trim molding from the latch panel (Fig. 3).

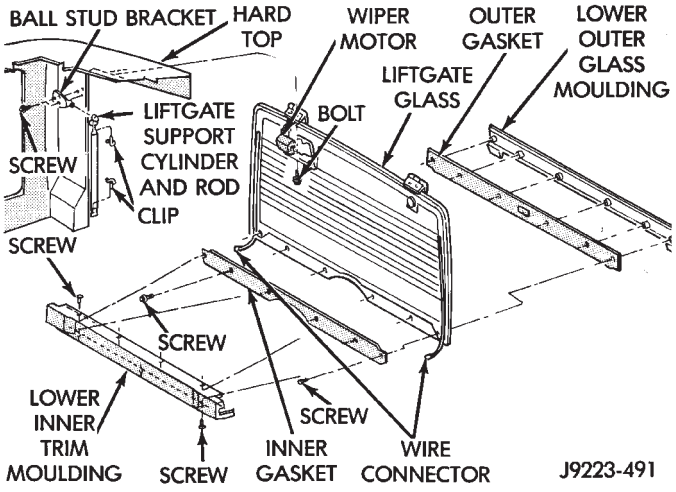

Fig. 3 Liftgate and Components

(2) Remove the retaining screws and the latch panel, inner gasket, outer gasket, and the lower, outer liftgate molding from the liftgate (Fig. 3).

(3) Refer to Group 8, Electrical for service information involving the wiper motor and the defroster.

(4) If necessary, remove the latch strikers and the ball stud brackets from the hard top inner panel (Fig. 3).

ASSEMBLY

(1) If removed, install the latch strikers and the ball stud brackets on the hard top inner panel (Fig. 3).

(2) Position the latch panel, and gaskets, and liftgate molding on liftgate and install screws (Fig. 3). Tighten the screws to 7 N·m (60 in-lbs) torque.

(3) Position the lower, inner trim molding on the latch panel. Install screws (Fig. 3). Tighten the screws to 2 N·m (12 in-lbs) torque.

LIFTGATE GLASS WEATHERSTRIP SEAL REPLACEMENT—YJ

REMOVAL

(1) Remove the liftgate glass from the hard top. If necessary, refer to the removal procedure.

(2) Remove the retaining screws from the liftgate-to-tailgate weatherstrip seal (Fig. 4).

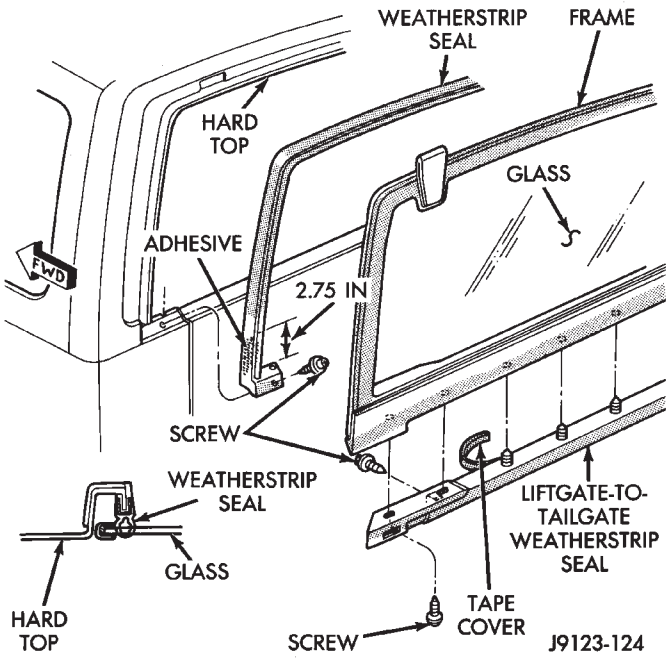

Fig. 4 Liftgate Glass Weatherstrip Seals

(3) Carefully separate the seal and retainers from the bottom of the liftgate glass.

(4) Remove the hard top weatherstrip seal retaining screws from body rear panels.

(5) Carefully separate the weatherstrip seal from the rear panels and the hard top.

(6) Remove the residual adhesive from the seal contact areas.

INSTALLATION

(1) Remove the tape cover and position the liftgate-to-tailgate weatherstrip seal at the bottom of the liftgate glass (Fig. 4).

(2) Carefully insert the retainers into the holes and press the seal against the bottom of the liftgate glass.

(3) Install the liftgate-to-tailgate weatherstrip seal screws Tighten the screws securely.

(4) Apply weatherstrip adhesive to the hard top weatherstrip seal (Fig. 4).

(5) Carefully position the weatherstrip seal on the rear panels and the hard top.

(6) Press the seal onto the hard top flange and ensure that it is correctly seated on the flange.

(7) Install the seal retaining screws in the rear panels and tighten them securely.

HARD TOP—YJ

The hard top is constructed of compressed molded fiberglass and painted to a special spatter paint. The hard top can be removed for service access or for other purposes.

REMOVAL

CAUTION: When removing the hard top, avoid damaging the foam sealant between the hard top and body panels.

(1) Remove the screws that attach the hard top to the windshield frame (Fig. 1 and 2).

(2) Remove the screws that attach the hard top to the rear beltline moldings, body panels and tapping plates (Fig. 1).

(3) Disconnect the wire harness connector and washer fluid hose. (Fig. 3).

(4) Remove the beltline moldings and the hard top from the vehicle (Fig. 1).

INSTALLATION

(1) Inspect the hard top seals for damage and replace, if necessary.

(2) Carefully position the hard top on the vehicle.

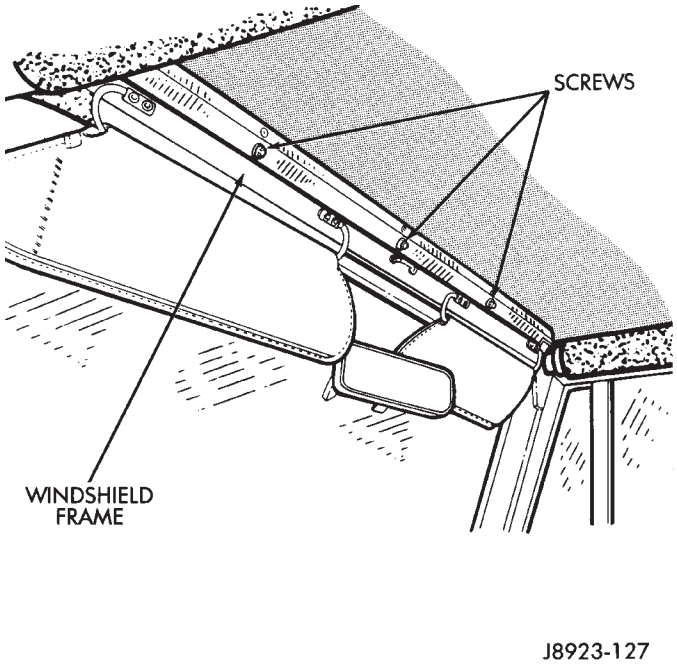

Fig. 2 Hard Top-To-Windshield Frame Screws

CAUTION: When installing the hard top, avoid damaging the foam sealant located between the top and body panels.

(3) Position the beltline molding on the hard top flange and install the screws. Tighten the screws securely.

(4) Connect the wire harness connectors.

(5) Install the screws to attach the hard top to the windshield frame. Tighten the screws securely.

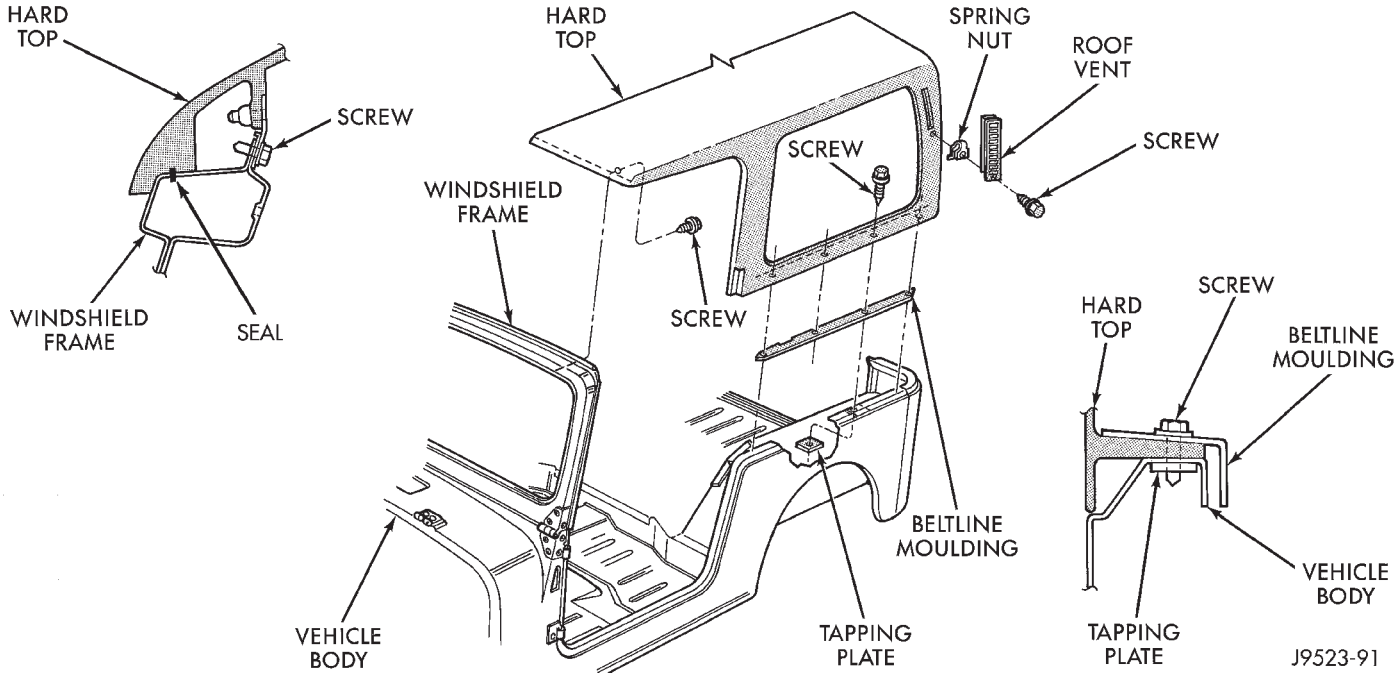

Fig. 1 Hard Top Removal/Installation

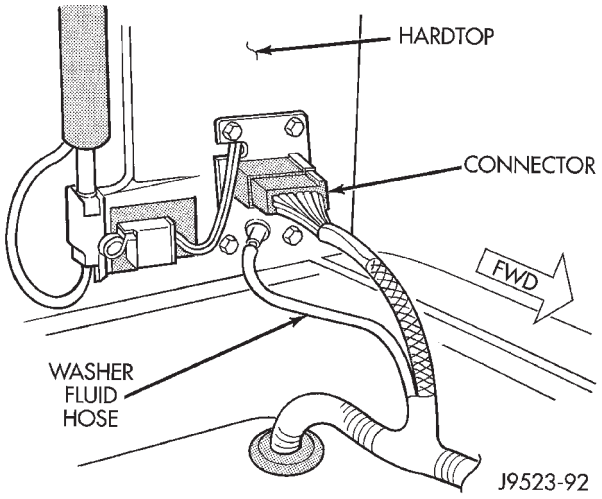

Fig. 3 Wire Harness Connection

HARD TOP ROOF VENT—YJ

REMOVAL/INSTALLATION

(1) Remove the roof vent retaining screw from the spring nut (Fig. 1).

(2) Remove the roof vent from the hard top.

(3) Position the roof vent on the hard top and install the retaining screw.

HARD TOP REPAIR—YJ

The hard top fiberglass material can be repaired. The required repair materials include:

- Fiberglass mat or cloth.
- Fiberglass resin and hardener.
- structural adhesive (3M brand or an equivalent product).
- Glazing putty.
- Aluminum foil.
- Plastic spreader.

HARD TOP HOLE REPAIR

(1) Use a grinder to remove the paint and outline the damaged area. Use a grade 24 grit disc for paint removal.

(2) Grind the outlined surface area again to a 50 grit disc to prevent coarse scratches from appearing in the final finish.

(3) If cracks extend from the hole, it will be necessary to stop-drill the crack(s) with a 3-mm (1/8-in) diameter drill bit.

(4) Position a fiberglass mat or cloth on the repair surface area. Cut the mat to allow a 2.5-cm (1-in) overlap of the repair surface area.

(5) Clean the repair surface area.

(6) Place the fiberglass cloth on aluminum foil.

(7) Pour the fiberglass resin into a clean container.

(8) Mix the appropriate amount of hardener and resin. Follow the manufacturers instructions.

(9) Apply the hardener/resin mixture to both sides of the fiberglass cloth.

(10) Place the fiberglass cloth over the repair surface area. Next, place the aluminum foil over the cloth. Use a plastic spreader to smooth-out the cloth and resin. Use firm pressure to remove air bubbles and to smooth-out the cloth.

(11) Allow the resin to cure.

(12) Smooth-out the surface area to the contour of the hard top with a 50-grit disc.

(13) Apply plastic filler to complete the repair. Finish smoothing the surface area with 80-grit paper.

(14) Repeat the previous step on the inside surface area of the hard top.

(15) Featheredge the repaired surface area.

(16) Prime the repaired surface area with Ditzler Epoxy Chromate Primer (DP-40/401), or an equivalent product.

(17) Apply surface primer to the surface area.

(18) Sand the surface area for paint preparation. After sanding, re-prime the surface area, if necessary.

(19) Prime the surface area for the color coat.

(20) Color coat the repaired surface area.

FRACTURE REPAIR

(1) Use a grinder to remove the paint (from both, the inner and outer surface areas of the hard top) and to outline the damaged area.

(2) Stop-drill the crack(s) with a 3-mm (1/8-in) diameter drill bit.

(3) Bevel the edges of the crack(s) on both sides with a rotary file.

The edges should be beveled on the inside and outside of the top to ensure sufficient surface area for good bonding.

(4) Complete the repairs with fiberglass cloth and resin as described above in the hard top hole repair procedure.

TEXTURED PAINT REPAIR

The textured paint applied to hard tops is available from Mopar Parts sources. The paint supplied will duplicate the original texture on the hard top.

SOFT TOP SERVICE INFORMATION—YJ

The soft top fabric consists of the top cover and the side and rear curtains (Fig. 4). The top cover is supported by a tubular bow (frame) and is attached to the upper side retainers (above the doors) with snap-on retainers (Fig. 5).

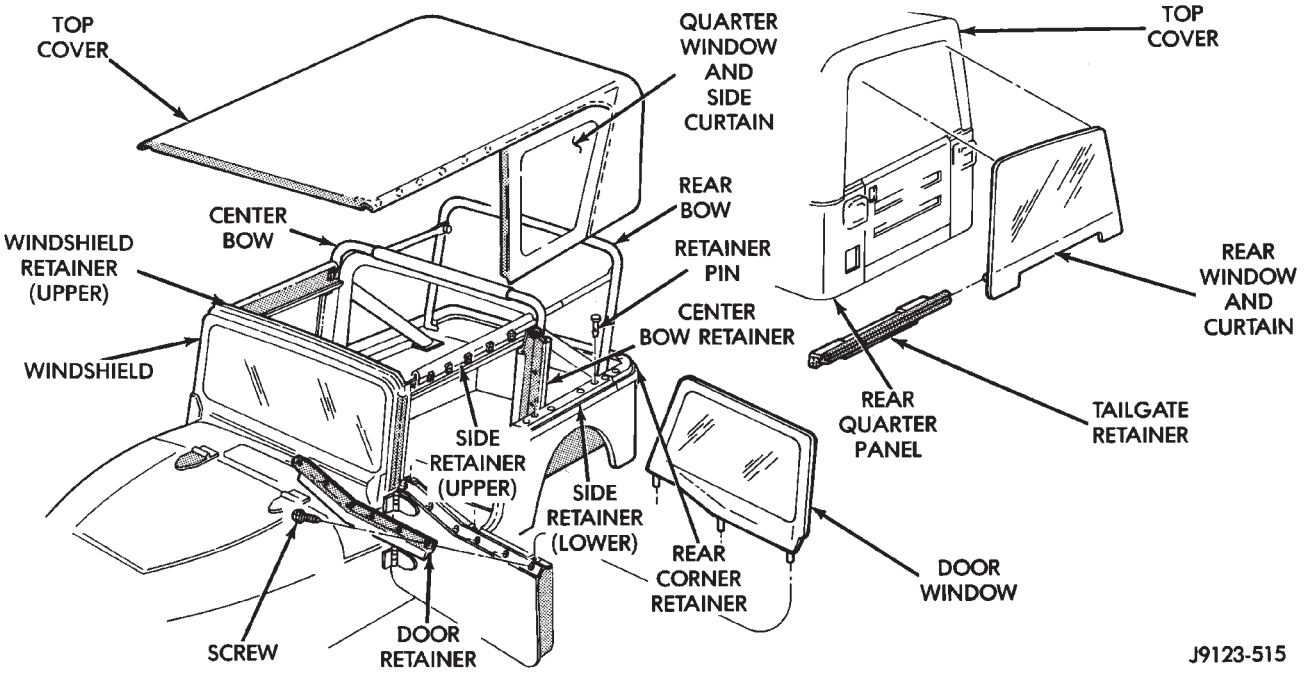

Fig. 4 Soft Top Cover, Curtains and Windows

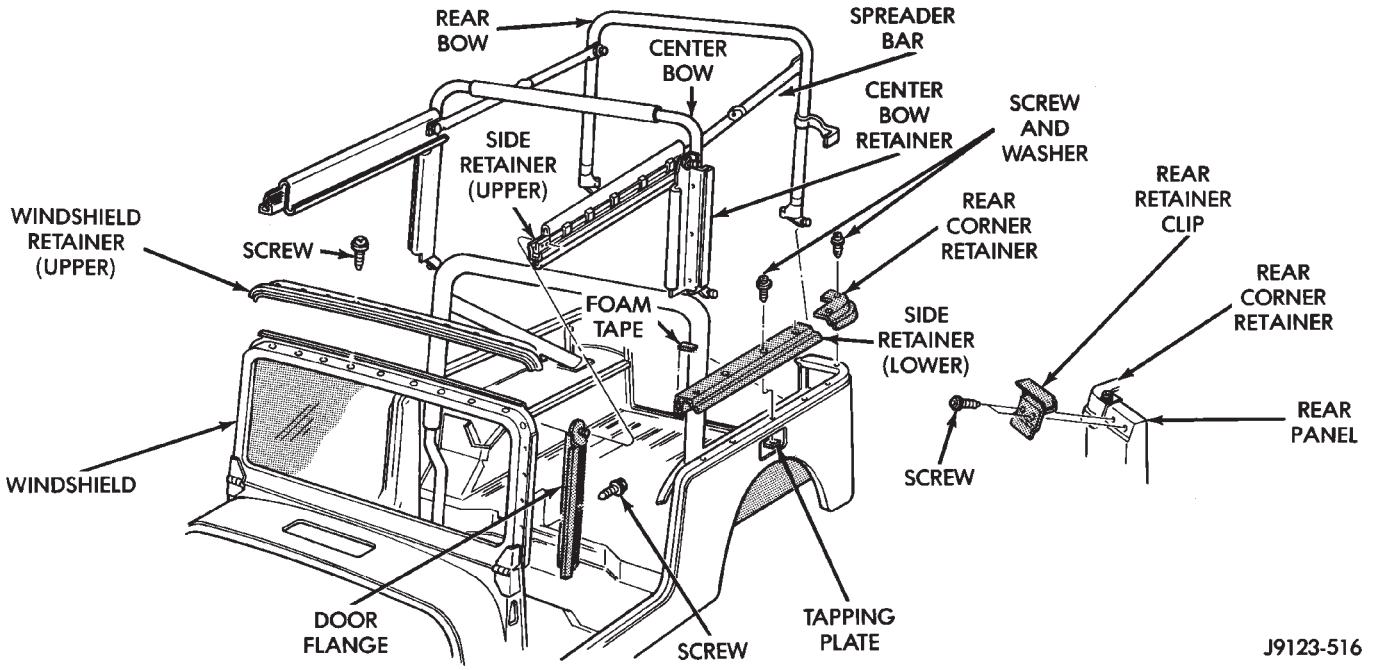

Fig. 5 Soft Top Bow, Spreader Bar and Retainers

SOFT TOP SERVICE—YJ

REMOVAL

(1) Detach the snap-on retainers from the upper side retainers (Fig. 4 and 6).

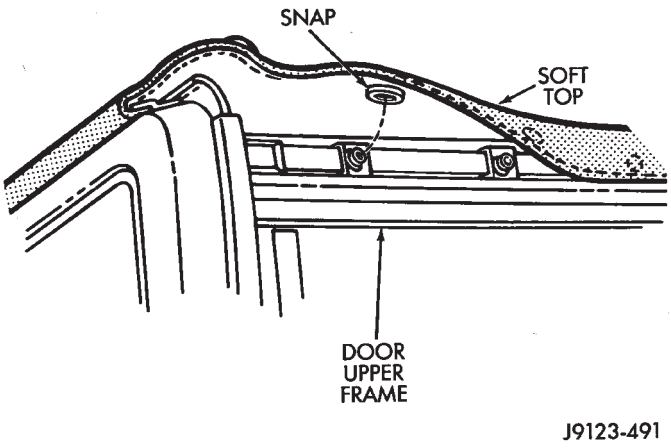

Fig. 6 Upper Side Retainers

(2) Slide the upper side retainer lock forward. Next, disengage the lock from the pin and remove the retainer from the door flange (Fig. 4, 5 and 7).

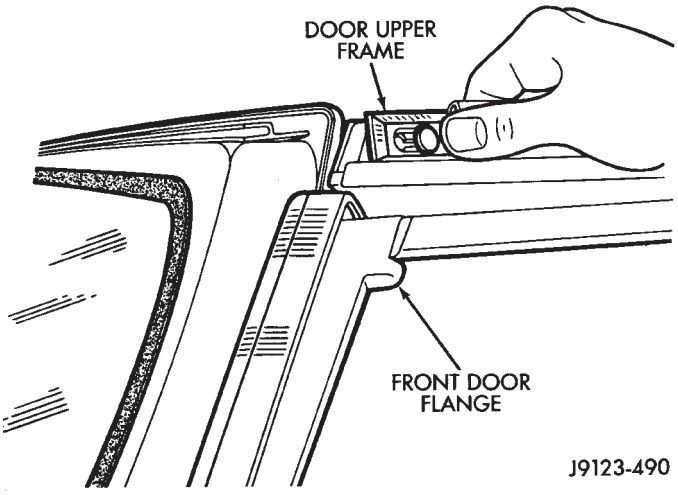

Fig. 7 Upper Side Retainer Removal From Door Flange

(3) Detach the snap-on retainer at the front corner (Fig. 8), turn the retainers and remove the door windows (Fig. 9).

(4) Open the side curtain upper and rear zippers.

(5) Detach the interior snap-on retainer and tab, and pull the bottom edge of each side curtain out of the lower side retainer channel.

(6) Slide the front edge of the side curtain downward and remove it from the center bow retainer channel.

(7) Pull downward on the spreader bar to release the lock and the tension on the center and rear bows (Fig. 10).

(8) Open the tailgate.

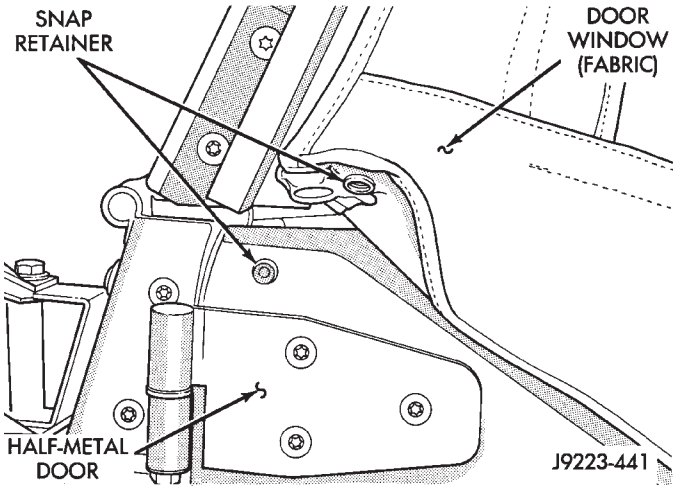

Fig. 8 Door Window Snap-On Retainer

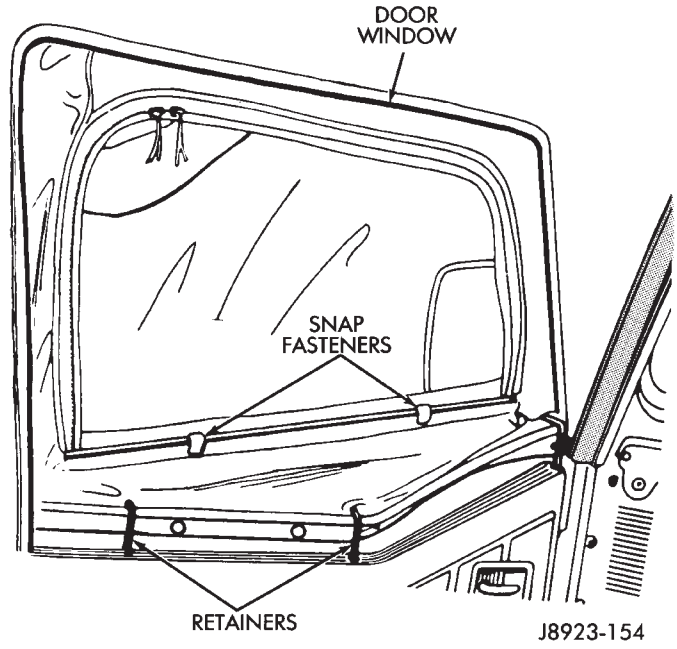

Fig. 9 Door Window Removal/Installation

(9) Open the rear curtain upper and side zippers.

(10) Roll up the rear curtain and attach it to the top cover with the elastic straps and snap-on retainers (Fig. 11).

(11) Pull the bottom edge of the rear corners outward and detach from the side (lower) retainer (Fig. 12).

(12) Detach the top cover from the upper side retainers located above the doors (Fig. 13). Next, detach the top cover from the retainer channel located along the upper edge of the windshield frame.

(13) Pull the top cover rearward from the windshield frame and fold it above the center bow (Fig. 14).

(14) Slide the top cover rearward (Fig. 15). The rear bow legs should move forward and fold under the center bow legs and the upper side retainers.

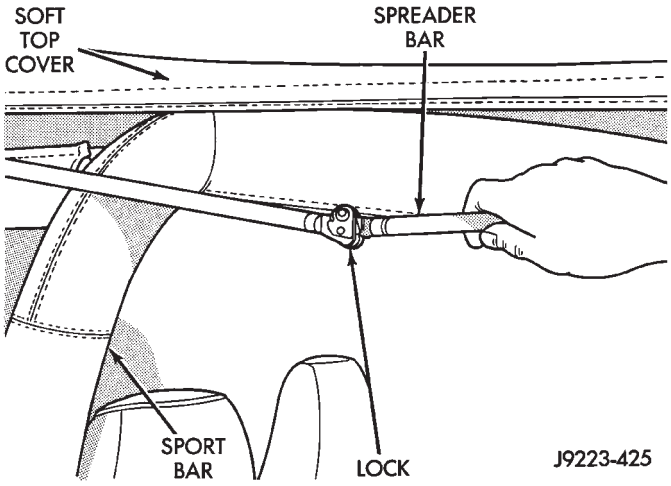

Fig. 10 Releasing Spreader Bar Tension

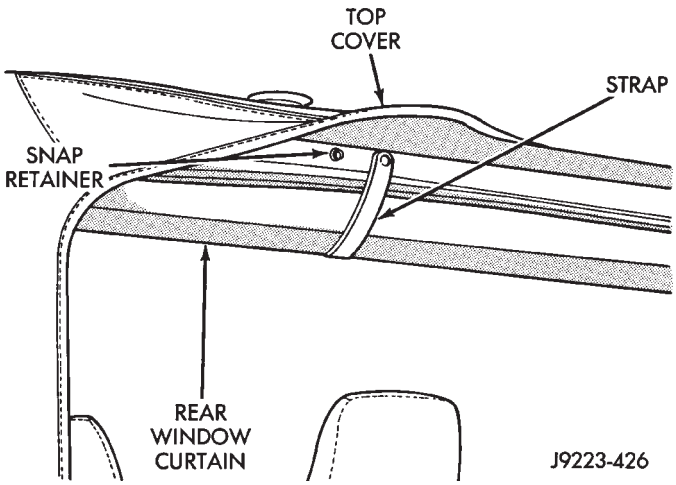

Fig. 11 Rear Curtain Stowed

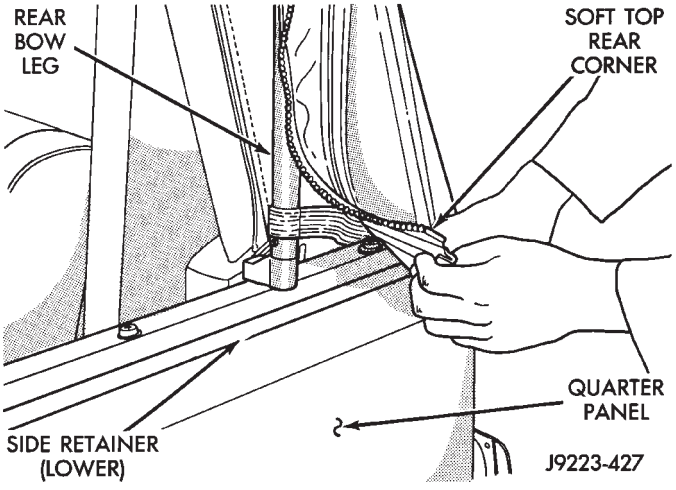

Fig. 12 Detaching Rear Corner Side (Lower) Retainer

(15) Slide the center bow legs out of the lower side retainers and remove the top cover from the vehicle.

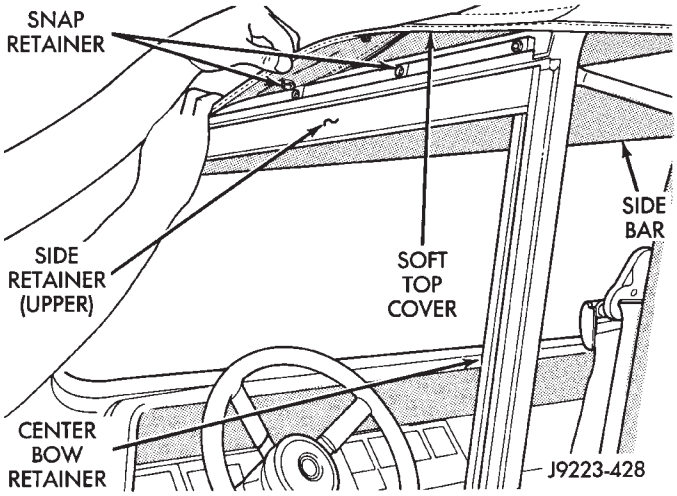

Fig. 13 Top Cover Snap-On Retainers At Upper Side Retainers

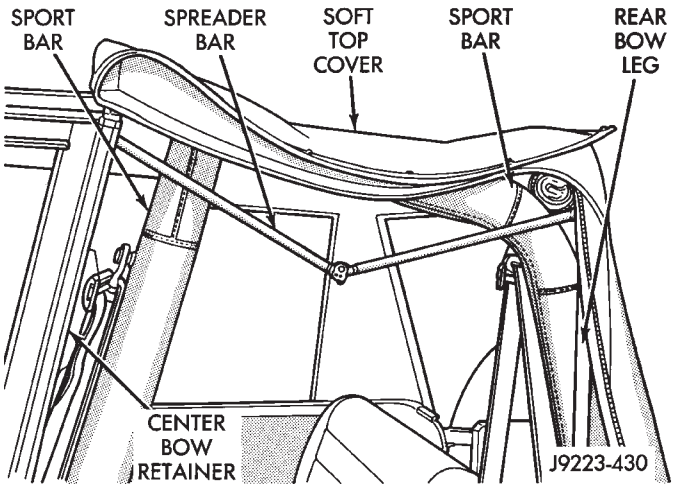

Fig. 14 Folding Top Cover

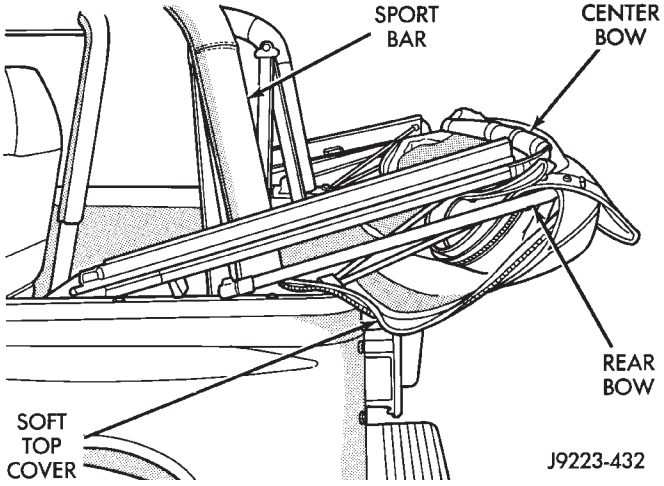

Fig. 15 Sliding Top Cover Rearward

INSTALLATION

(1) If stowed at the rear of the vehicle, detach the elastic straps that retain the top cover (Fig. 16).

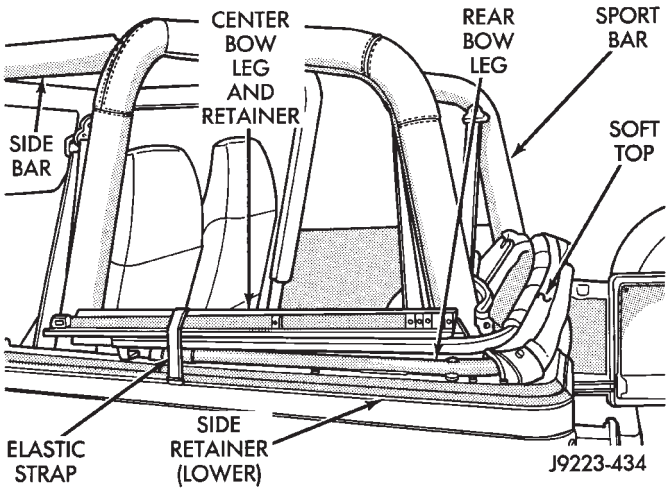

Fig. 16 Stowed Top Cover

(2) If not stowed, position the center bow legs anchor pins in the lower side retainer receptacles (Fig. 17).

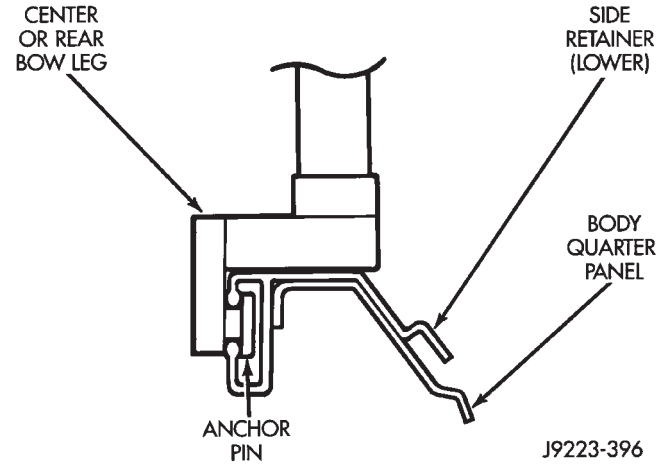

Fig. 17 Bow Leg and Anchor Pin

(3) Grasp the cover at the upper side snap retainers and pull the top cover upward and forward.

(4) Position front of the upper side snap retainers at the door flanges and lock pin at each side of the vehicle (Fig. 18). Engage the locks with the pins and then slide the locks rearward.

(5) Insert the front edge of the top cover into the retainer channel on the windshield frame (Fig. 19).

(6) Ensure that the center bow leg is positioned all the way forward in the receptacle.

(7) Ensure that the rear corners of the top cover are inserted in the retainer channels (Fig. 19).

(8) Pull the rear bow legs rearward until they engage with the notch in the lower side retainers. Ensure that the side curtain rear zippers are not entrapped or folded behind the rear bow.

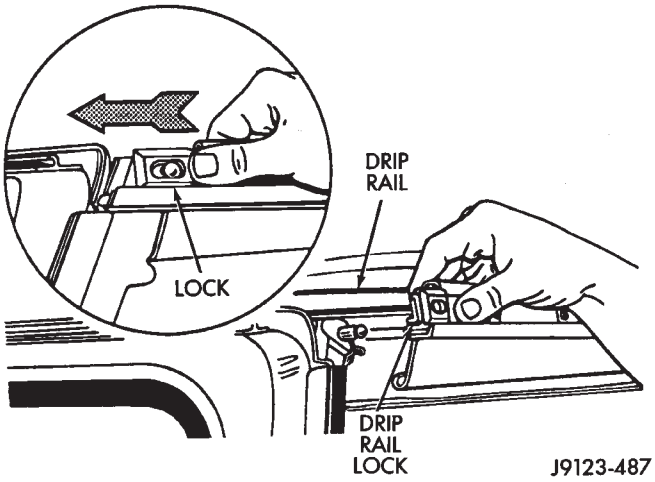

Fig. 18 Upper Side Retainer Lock Engagement

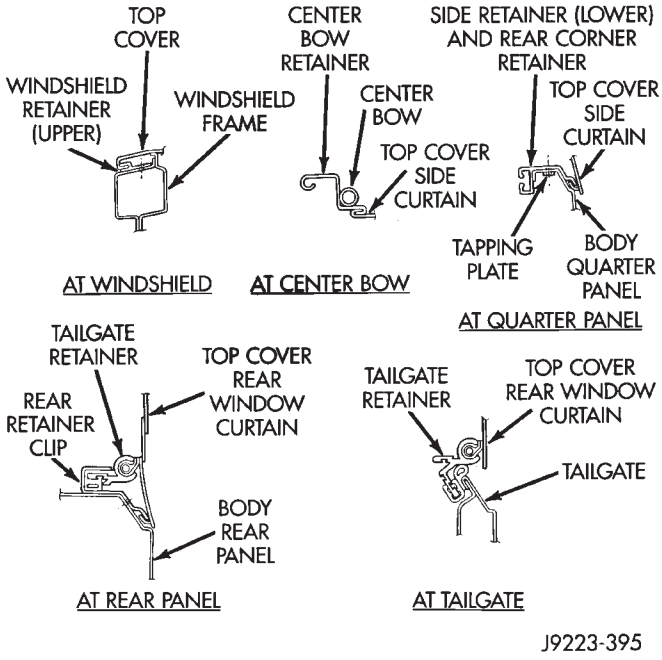

Fig. 19 Soft Top Installation

(9) Force the spreader bars (Fig. 20) upward until the lock engages.

(10) Slide the front edge of each side curtain upward into the retainer channel on the center bow.

(11) Close top zipper on each side curtain 5 - 8 cm (2 - 3 in). Next, close the rear zipper at the bottom corner of the curtain 5 - 8 cm (2 - 3 in).

(12) Attach the side curtain front and rear tab snap-on retainers to the lower side retainer.

(13) Completely close both side curtain zippers.

(14) Pull downward firmly on the side curtains. Start at one end and move toward the opposite end. The bottom edge of the curtains must be completely inserted in the lower side retainer channels.

(15) Release the rear window curtain straps and insert the bottom edge into the tailgate retainer

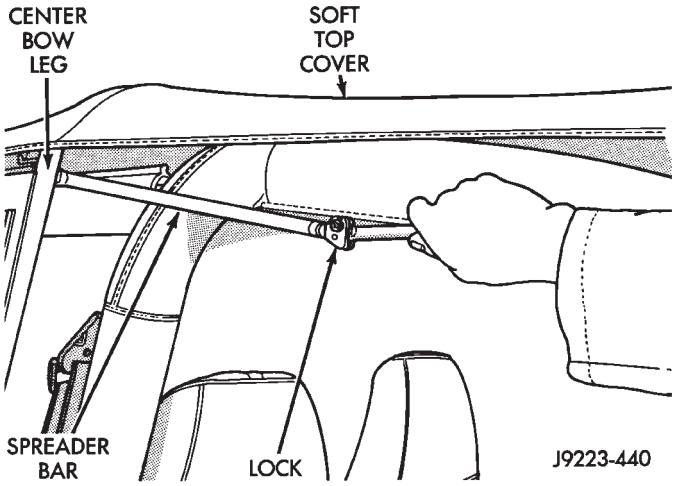

Fig. 20 Engaging Spreader Bar Lock

channel. Close the rear window curtain zippers and attach the side snap-on retainers.

(16) Attach all the top cover snap-on retainers to the upper side retainers located above both doors. As necessary, slide the mating half of the snap-on retainers so that they will align with the snap-on retainers on the top cover. Tuck the edge of the top cover inside the side retainer.

(17) Install the door windows by inserting the retainers into the door grommets. Attach the snap-on retainers located along the bottom edge of the window to the door retainer.

SPORT BAR—YJ

REMOVAL

(1) Disconnect sound bar. Refer to Group 8F, Audio Systems for removal and installation procedures.

(2) Remove the screws that attach the sport bar base plates to the floor and wheelhouse panels (Fig. 1).

(3) Remove the retaining screws and bolts, and remove the side bars from the windshield frame and the sport bar (Fig. 1 and 2).

(4) Carefully lift the sport bar upward and remove it from the vehicle.

(5) If necessary, remove the pads and covers from the sport bar.

INSTALLATION

(1) Clean the base plate contact surface areas on the floor and wheelhouse panels.

(2) Apply epoxy chromate primer to the attaching screw hole edges for protection against corrosion.

(3) Position the sport bar base plates on the floor and wheelhouse panels with the screw holes aligned.

To prevent water seepage, apply 3M Drip-Chek Sealant (or an equivalent product) to the underside of all the screw heads before installation.

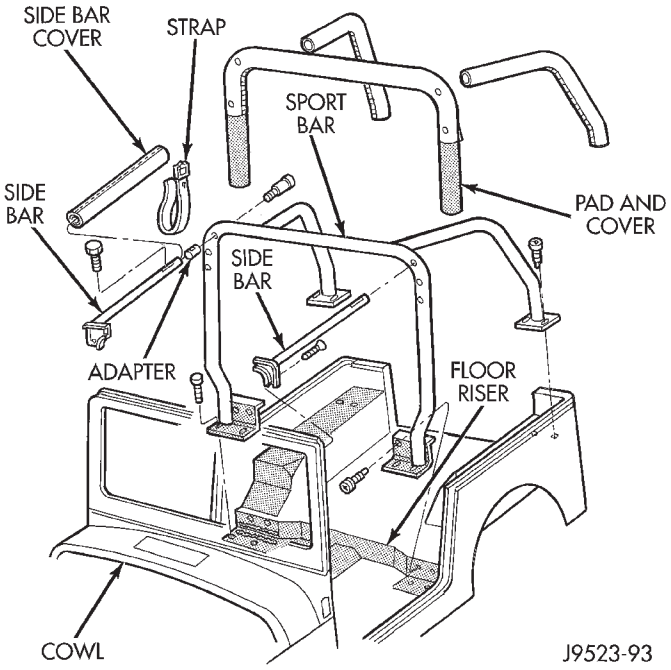

Fig. 1 Sport Bar

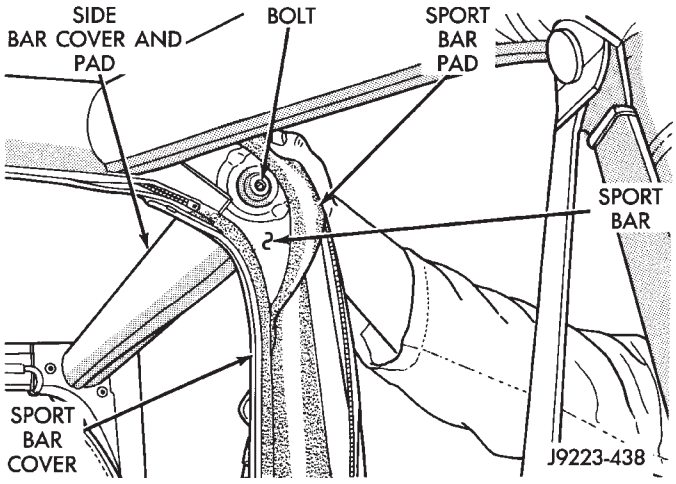

Fig. 2 Sport Bar-To-Side Bar Bolt

(4) Apply sealant to the underside of each base plate attaching screw head. Install and tighten the screws to 42 N·m (31 ft. lbs.) torque.

(5) Position the side bars at the windshield frame. Tighten the screws to 32 N·m (24 ft. lbs.) torque.and at the sport bar. Install screws and bolts in the windshield frame and the sport bar. Tighten the screws to 32 N·m (53 ft. lbs.) torque.

(6) Position the side bars at the sport bar. Install the bolts in the sport bar. Tighten the screws to 71 N·m (53 ft. lbs.) torque.

(7) Install sound bar.

EXTERNAL SPARE/WHEEL TIRE CARRIER—YJ

REMOVAL

(1) Remove the spare tire and wheel from the wheel bracket (Fig. 3).

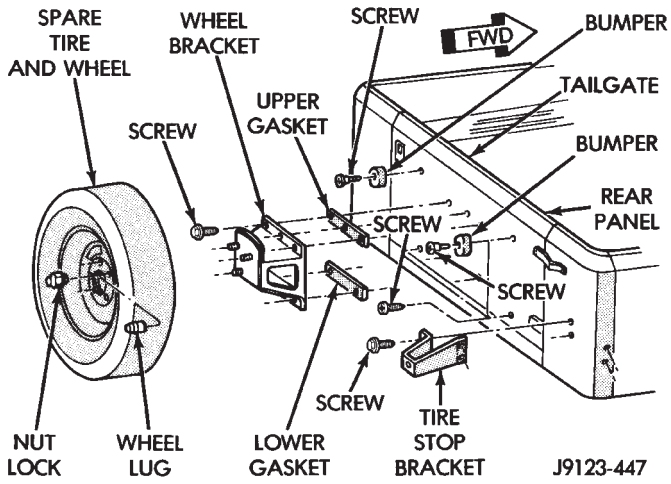

Fig. 3 External Spare Tire/Wheel Carrier

(2) Remove the screws that attach the wheel bracket to the tailgate.

(3) Disconnect CHMSL (Fig. 4).

(3) Remove the bracket and the gaskets from the tailgate.

(4) Remove the screws that attach the stop bracket to the rear panel and the bumpers to the tailgate.

(5) Remove the stop bracket and the bumpers from the vehicle.

(6) Clean the contact surface areas on the tailgate and the rear panel.

INSTALLATION

(1) Position the stop bracket and the bumpers on the vehicle, and install screws. Tighten the screws to 11 N·m (95 in-lbs) torque.

(2) Position the gaskets and the wheel bracket on the tailgate and install the attaching screws. Tighten the screws to 23 N·m (204 in-lbs) torque.

(3) Connect CHMSL connector.

(4) Install the spare tire and wheel on the wheel bracket. Tighten the wheel lug nuts and the nut lock to 68 N·m (50 ft-lbs) torque.

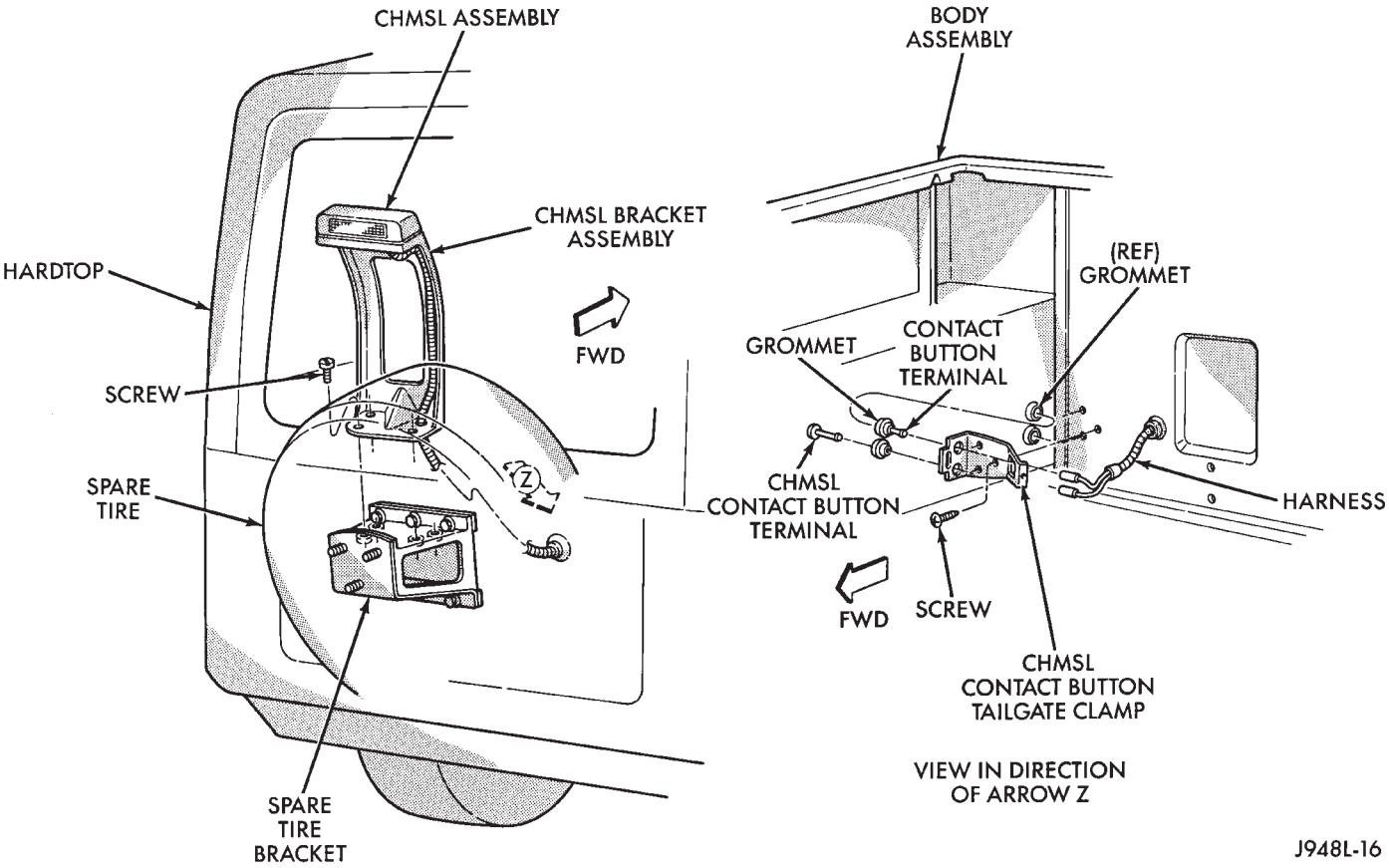

Fig. 4 CHMSL Removal

DOORS

INDEX

	page
Beltline Seal—YJ	142
Door Frame Glass Channel Replacement—YJ	142
Door Weatherstrip Seal Replacement—YJ	142
Full-Metal Door Assist Handle—YJ	136
Full-Metal Door Hinges—YJ	140
Full-Metal Door Key Lock Cylinder—YJ	139
Full-Metal Door Latch External Release Handle—YJ	140
Full-Metal Door Latch Inside Release and Lock Handle—YJ	137
Full-Metal Door Latch—YJ	140
Full-Metal Door Service—YJ	142
Full-Metal Door Trim Panel—YJ	137
Full-Metal Door Vent Window Glass—YJ	137
Full-Metal Door Waterdam—YJ	137
Full-Metal Door Weatherstrip Seals—YJ	141
Full-Metal Door Window Glass Regulator Handle—YJ	136
Full-Metal Door Window Glass Regulator—YJ	138
Full-Metal Door Window Glass—YJ	139
Half-Metal Door Latch Striker—YJ	135
Half-Metal Soft Top Door—YJ	134

HALF-METAL SOFT TOP DOOR—YJ

REMOVAL/DISASSEMBLY

(1) Open the door.

(2) Disconnect the door restraint strap from the pin (Fig. 1).

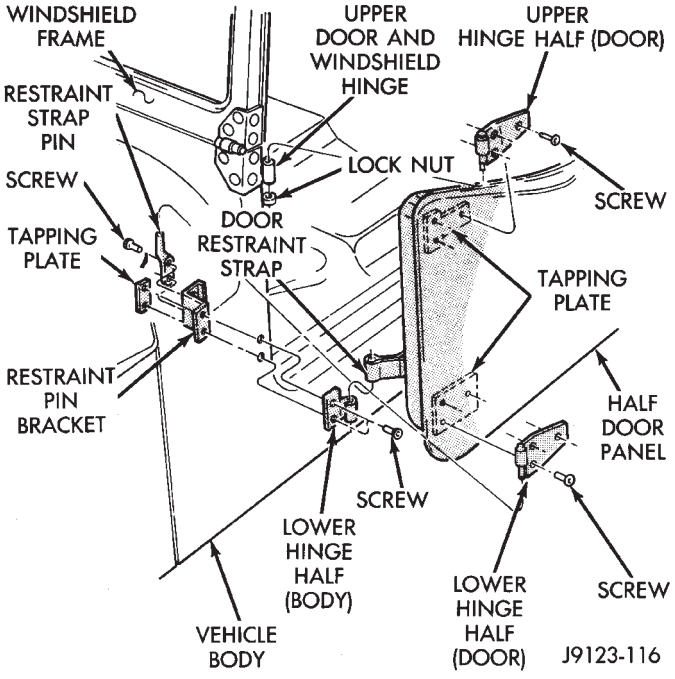

Fig. 1 Half-Metal Soft Top Door

(3) Turn the window retaining sleeves 1/4 turn to the left and pull them up and out of the door (Fig. 2).

(4) Remove the window from the door by detaching the soft top-to-door snap fasteners and pulling the window up and out of the door (Fig. 3).

(5) Remove the latch interior release handle (Fig. 4).

(6) Remove the assist handle.

(7) Remove the trim panel by detaching the retainers around the perimeter of the trim panel (Fig. 4).

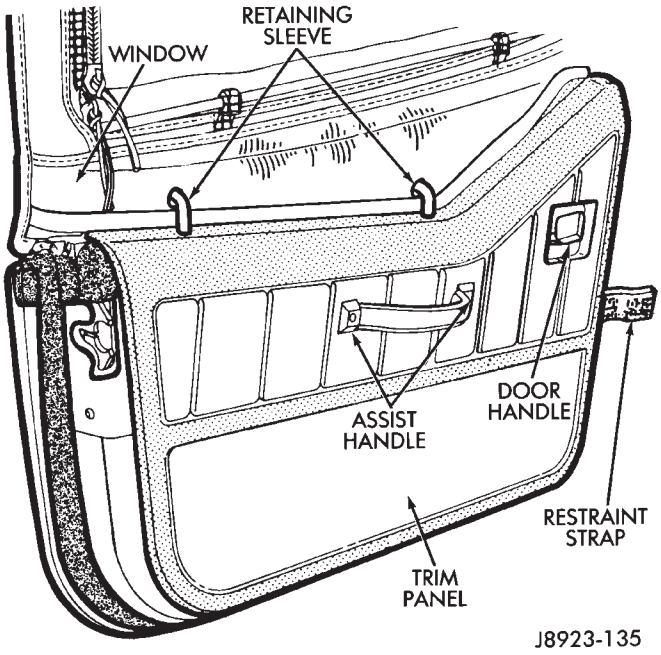

Fig. 2 Window Retaining Sleeves

(8) Remove the screws from the door latch handle, disconnect the latch release rod and remove the handle (Fig. 4).

(9) Remove the door latch screws (Fig. 4). Remove the door latch with the rods attached.

(10) Remove the weatherstrip seal screws and carefully remove the weatherstrip seal from door edge (Fig. 5).

(11) Remove the retaining nuts from the door hinge pivots and remove the door from the body (Fig. 1).

(12) Remove the retaining screws and the hinges from the door.

ASSEMBLY/INSTALLATION

(1) Install the hinges and the retaining screws on the door. Tighten the screws securely.

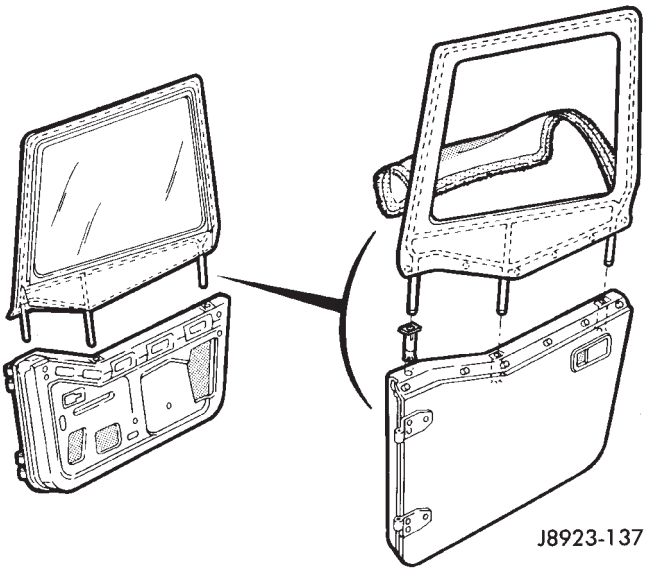

Fig. 3 Window Removal/Installation

(2) Position the door at the vehicle, insert the hinge pivots in the hinge receptacles and install the retaining nuts (Fig. 1). Tighten the nuts securely.

(3) Install the weatherstrip seal on the door edge and install the seal retaining screws (Fig. 5).

(4) Position the latch in the door and install the retaining screws (Fig. 4). Tighten the screws securely.

(5) Position the door latch external release handle and install the retaining screws (Fig. 4). Tighten the screws securely. Connect the latch release rod to the external release handle and the key lock-to-latch rod (Fig. 6).

(6) Install the interior trim panel (Fig. 4).

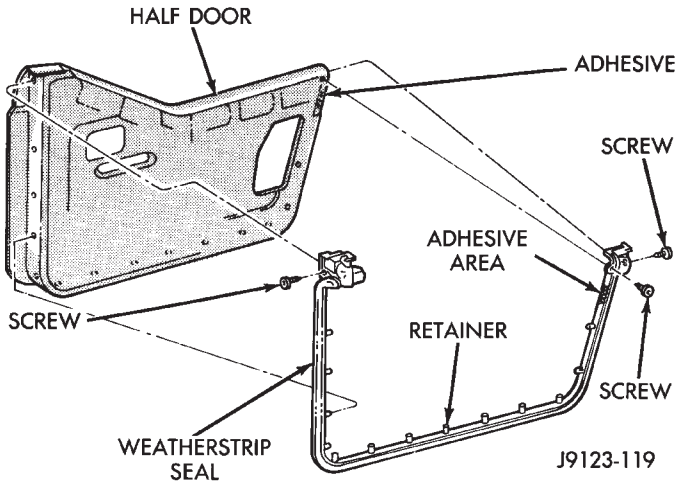

Fig. 5 Half-Metal Door Weatherstrip Seal

(7) Connect the latch release rod to the door latch interior release handle and install the handle (Fig. 4).

(8) Install the assist handle.

(9) Install the window retaining sleeves.

(10) Install the window (Fig. 3).

(11) Attach the restraint strap to the pin (Fig. 1).

HALF-METAL DOOR LATCH STRIKER—YJ

REPLACEMENT

(1) Remove the striker with a Torx bit (Fig. 7).

(2) Install the plate, shim and replacement striker with a Torx bit (Fig. 7).

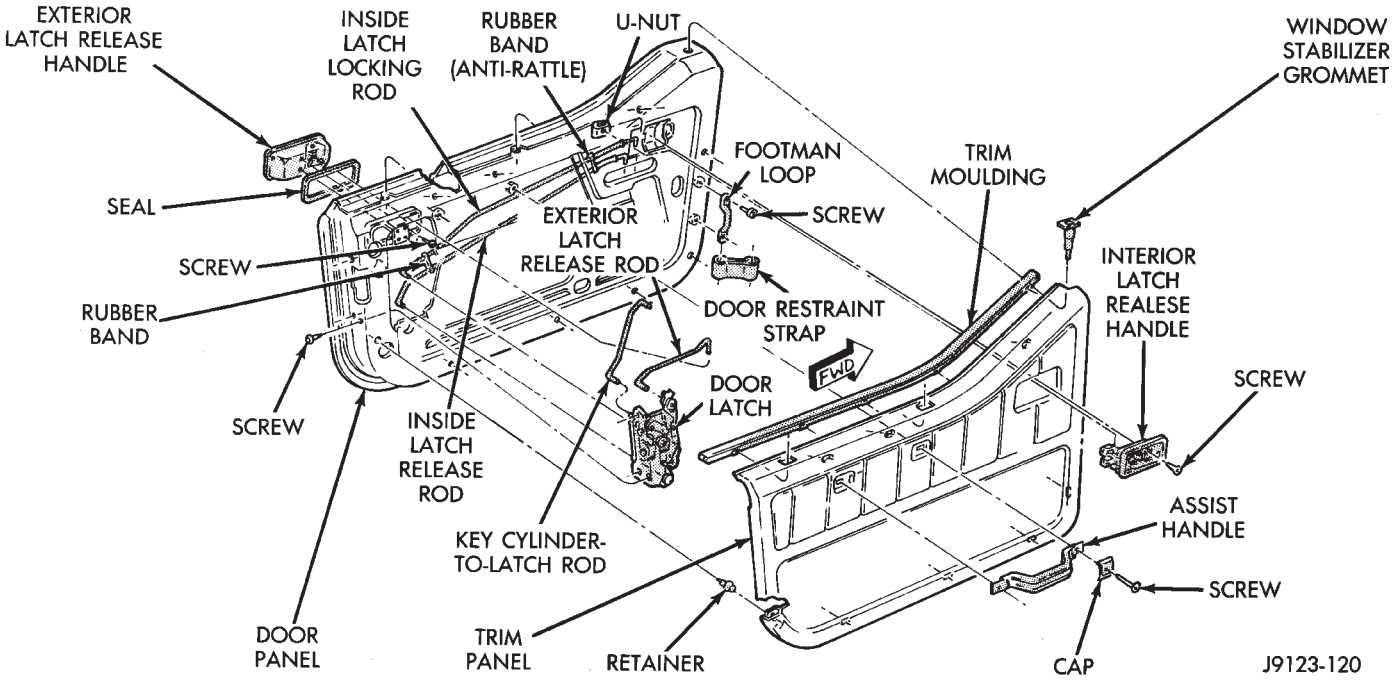

Fig. 4 Half-Metal Door Interior Trim Panel

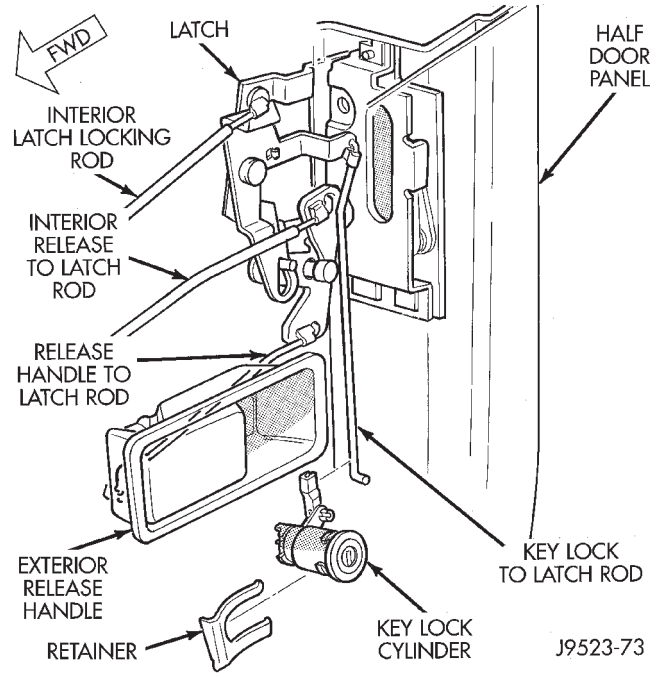

Fig. 6 Half-Metal Door Latch

FULL-METAL DOOR WINDOW GLASS REGULATOR HANDLE—YJ

REMOVAL/INSTALLATION

The window glass regulator handle is attached to the splined regulator shaft with an internal hex-head screw (Fig. 8).

(1) To remove the handle:

- Remove the cover.
- Remove the screw.

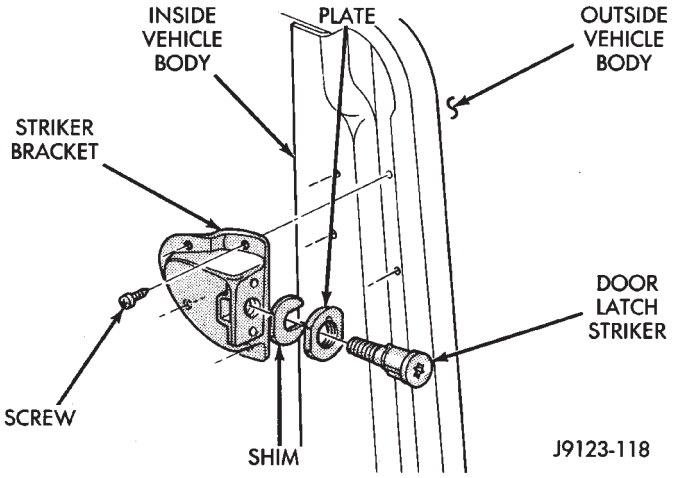

Fig. 7 Half-Metal Door Latch Striker

- Pull the handle straight out and off the shaft (Fig. 8).

(2) Install the handle with the knob positioned forward, the handle horizontal and the window glass closed.

FULL-METAL DOOR ASSIST HANDLE—YJ

REMOVAL

(1) Remove the screws that attach the door assist handle to the trim panel (Fig. 8).

(2) Remove the handle from the door.

INSTALLATION

(1) Position the handle on the door.

(2) Install the attaching screws.

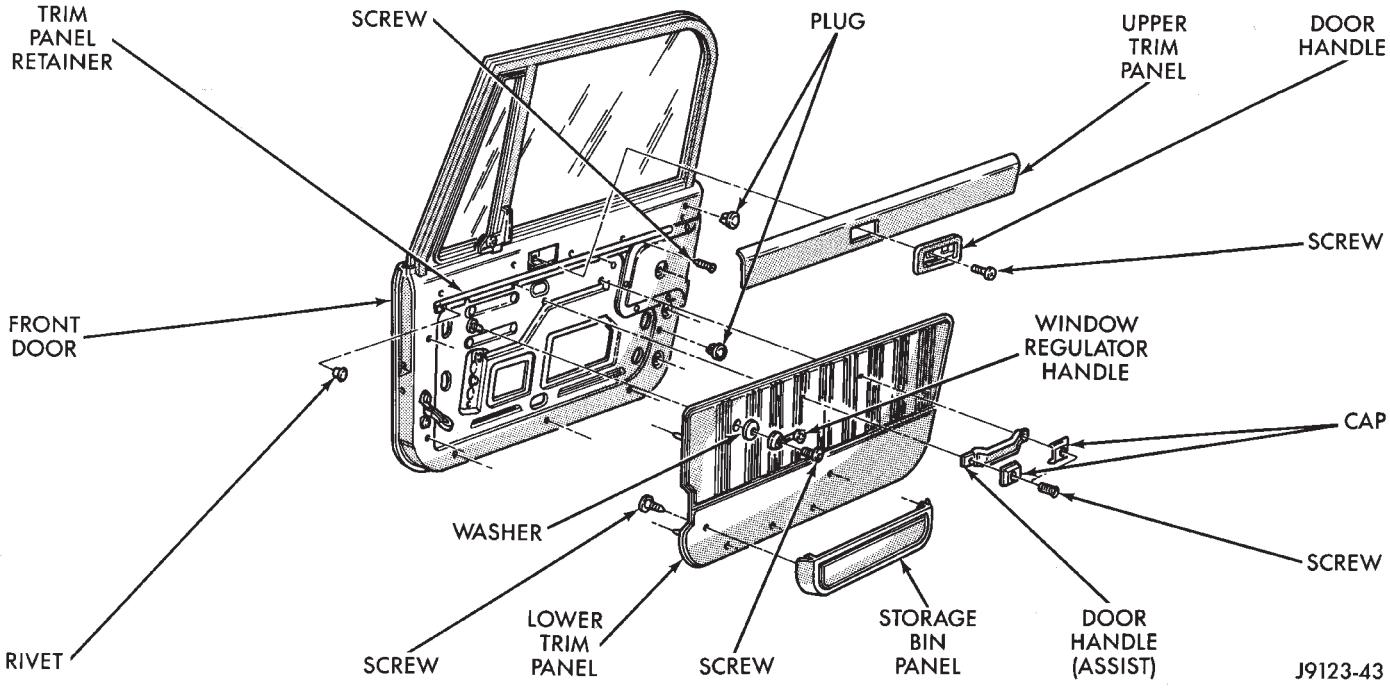

Fig. 8 Full Metal Door Trim Panels and External Components

(3) Close the jaws on the latch.

(4) Push the lock-to-latch rod forward toward the inside release handle. Check to ensure the lock lever on the latch is in the unlocked position.

(5) Position the threaded end of the lock rod over the lever clip on the latch and push the rod into the lock lever clip (Fig. 9). The lock lever should have a full sweep of travel when activated by the inside control button. It should not bind or be stiff.

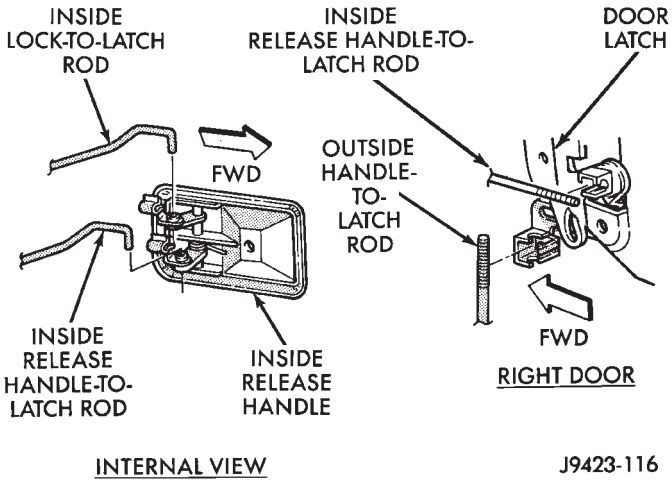

Fig. 9 Inside Door Handle and Rods

(7) Position the threaded end of the release lever rod over the release lever clip on the latch and push the rod into the release lever clip. The release lever on the latch should be resting against the stop with no preload after the rod is engaged in the retaining clip. Visual observation will reveal any preload. If preload is noted, disconnect the release lever rod and install it again to eliminate the preload.

(8) Pull up on the outside handle release rod to position it as far up as possible and push the rod into the release lever clip on the latch. The release lever on the latch should be resting against stop with no preload after the rod is engaged in the retaining clip.

(9) Close the latch jaws.

(10) Activate the inside lock control button. It should not bind or be stiff, if either condition exists, the latch should replaced.

(11) With the inside lock control button in the unlock position, pull the inside door handle to open the jaws on the latch and close the door.

FULL-METAL DOOR LATCH INSIDE RELEASE AND LOCK HANDLE—YJ

REMOVAL

(1) Remove the retaining screw (Fig. 8).

(2) Pull the handle outward and detach the lock and release rods from handle (Fig. 9).

(3) Remove the handle from the upper trim panel (Fig. 8).

INSTALLATION

(1) Position the handle adjacent to the rods in the upper trim panel opening and attach the rods to the handle (Fig. 9).

(2) Position the handle in the upper trim cover and install the retaining screw Fig. 8).

FULL-METAL DOOR TRIM PANEL—YJ

The door interior trim panels are covered with a vinyl material (Fig. 8). They are attached to the door inner panel rail retainer and with plastic clips inserted into holes in the door inner panel.

REMOVAL

(1) Remove the door assist handle (Fig. 8).

(2) Remove the window glass regulator handle (Fig. 8).

(3) Remove the door latch release handle and the upper trim panel (Figs. 8 and 9).

(4) Pry the lower trim panel-to-door retainers (located around the perimeter of the panel) outward and remove the panel (Fig. 8).

INSTALLATION

(1) Position the lower trim panel on the door inner panel and insert the retainers in the holes in the door inner panel.

To prevent creasing the trim panel vinyl cover, do not hammer or exert excessive force on the retainers.

(2) Install the upper trim panel and the door handle.

(3) Install the window glass regulator handle (Fig. 8).

(4) Install the door assist handle.

FULL-METAL DOOR WATERDAM—YJ

The waterdam is attached to the door inner panel with adhesive and tape (Fig. 10).

REMOVAL/INSTALLATION

(1) To remove a waterdam, insert a putty knife between it and the door inner panel.

(2) When installing a waterdam, ensure that lower portion of

waterdam is tucked inside the door panel at the access opening.

FULL-METAL DOOR VENT WINDOW GLASS—YJ

REMOVAL

(1) Remove the door trim panel and the waterdam (Fig. 8 and 9).

(2) Lower the door window glass to the down-stop position.

(3) Remove the division channel upper attaching screw and the lower adjustment screw (Fig. 11).

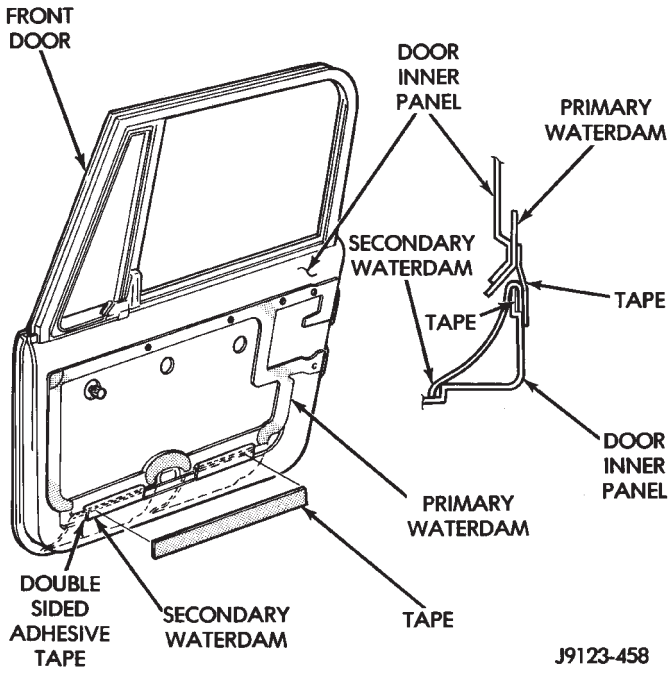

Fig. 10 Door Waterdam

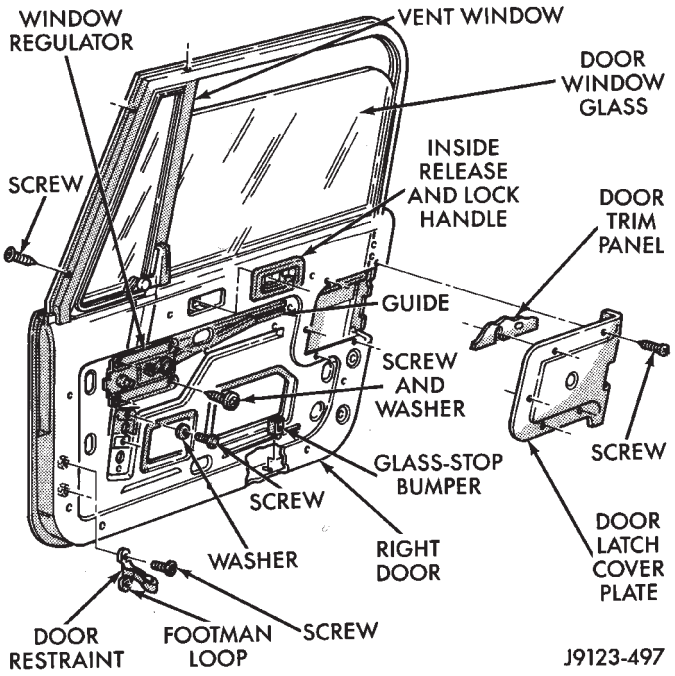

Fig. 11 Door Internal Components

(4) Detach the front three inches of weatherstrip seal from the door upper frame. Lower the division channel and tilt it toward the rear of the door.

(5) Remove the vent window glass from the door frame.

INSTALLATION

(1) Position the vent window glass in the door frame.

(2) Install the division channel in the door and position the channel on the window glass.

(3) Install the upper attaching screw and the lower adjustment screw.

(4) Attach the weatherstrip seal to the door upper frame.

(5) Water test the window and inspect for leaks.

(6) If water leakage is evident, apply windshield sealant to seal the area or re-align the weatherstrip seal.

(7) Test the operation and adjustment of the door window glass.

(8) Install the door waterdam and the trim panel (Fig. 8 and 10).

FULL-METAL DOOR WINDOW GLASS REGULATOR—YJ

REMOVAL

(1) Remove the door trim panel and the waterdam (Fig. 8 and 10).

(2) Lower the door window glass to expose the regulator arm guide retainer screws (Fig. 11 and 12). Remove the bushings, the nuts and the guide channel (Fig. 12).

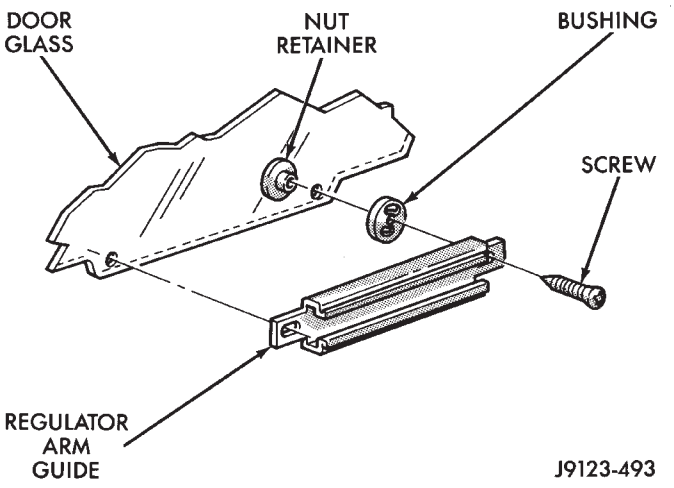

Fig. 12 Regulator Arm Guide

(3) Lift the window glass to the fully closed position and apply masking tape to the window glass and over the top of the window frame to retain it.

(4) Remove the division channel lower adjustment screw.

(5) Remove the window glass regulator attaching screws (Fig. 11).

(6) Push the division channel outward and remove the window glass regulator through the access hole in the door inner panel.

INSTALLATION

(1) Position the window glass regulator within the door panels and install the screws. Tighten screws to 10 N·m (96 in. lbs.) torque.

(2) Remove the masking tape from the window glass and lower it.

(3) Slide the regulator arm guide onto the regulator arm and position the guide on the window glass (Fig. 12). Install the nuts, bushings and screws.

(4) Install the division channel lower adjustment screw.

(5) Test the window glass for proper operation.

(6) Install the door waterdam and the trim panel (Fig. 8 and 10).

FULL-METAL DOOR WINDOW GLASS—YJ

ADJUSTMENT

One adjustment location provides amount of effort required to raise and lower the door window glass. The door window glass division channel is adjustable fore and aft at the lower attaching location.

(1) Remove the door trim panel and the waterdam (Fig. 8 and 10).

(2) Loosen channel lower adjustment screw and move the division channel fore or aft to obtain the desired door window glass operation.

Movement of the division channel fore or aft will decrease or increase the free-play between the channels.

(3) Tighten the division channel lower adjustment screw.

(4) Install the door waterdam and the trim panel (Fig. 8 and 10).

REMOVAL

(1) Remove the door trim panel and the waterdam (Fig. 8 and 10).

(2) Remove the window glass down-stop bumper (Fig. 11).

(3) Remove the screws that attach the regulator arm guide to the window glass. Remove the screws, bushings, nuts and the guide from the glass (Fig. 11).

(4) Lower the window glass to the bottom of the door.

(5) Remove the division channel upper attaching screw and the lower adjustment screw. Detach the front 3 inches of window glass weatherstrip seal from the door upper frame.

(6) Separate the division channel from the front window glass rubber seal. Pull the division channel up and in toward the inside of vehicle.

(7) Raise and tilt the window glass toward the hinge side of the door and disengage it from the rear channel.

(8) Pull the window glass up and out of the door panel.

INSTALLATION

(1) Lower the window glass into the door, while inserting the window glass into the front and rear channels.

(2) Slide the window glass downward to the bottom of the door panel.

(3) Lower the division channel into the door and position the window glass securely in the channel.

(4) Install the weatherstrip seal in the upper door frame and install the upper attaching screw and the lower adjustment screw.

(5) Slide the guide onto the regulator arm and position the guide on the window glass. Install the retaining nuts, bushings and screws (Fig. 12).

(6) Install the window glass down-stop bumper (Fig. 11).

(7) Test the window operation for proper adjustment.

(8) Install the door waterdam and the trim panel (Fig. 8 and 10).

FULL-METAL DOOR KEY LOCK CYLINDER—YJ

REMOVAL

(1) Remove the door trim panel and the waterdam (Fig. 8 and 10).

(2) Remove the door latch cover screws and remove the cover (Fig. 11).

(3) Remove the retaining clip and remove lock cylinder-to-latch rod (Fig. 13).

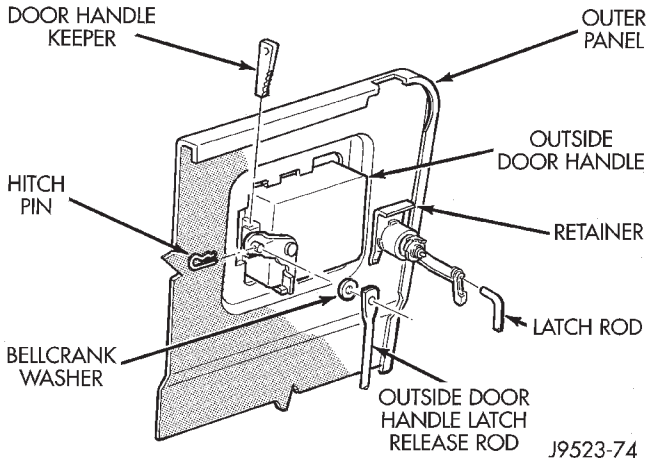

Fig. 13 Key Lock Cylinder and Door Handle

(4) Remove the lock cylinder retainer and the lock cylinder from the door panel (Fig. 13 and 14).

INSTALLATION

(1) Install the lock cylinder in the door panel (Fig. 14).

(2) Install the lock cylinder retainer, the lock cylinder-to-latch rod and the retaining clip.

(3) Install the door latch cover and the cover screws (Fig. 11).

(4) Install the door waterdam and the trim panel (Fig. 8 and 10).

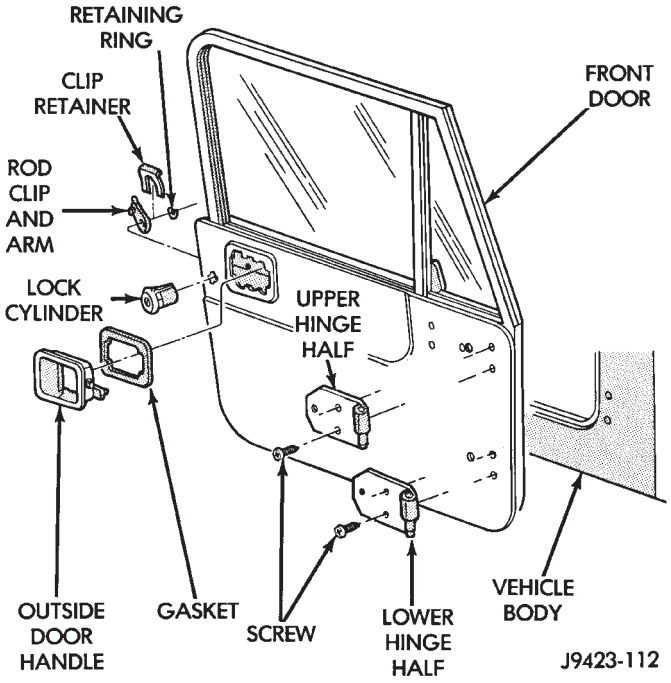

Fig. 14 Key Lock Cylinder and Door Handle Removal/Installation

FULL-METAL DOOR LATCH EXTERNAL RELEASE HANDLE—YJ

REMOVAL

(1) Remove the door trim panel and the waterdam from the door inner panel (Fig. 8 and 10).

(2) Remove the door latch cover attaching screws (Fig. 11).

(3) Remove the hitch pin and the latch release rod from the door external handle (Fig. 13).

(4) Close the window completely and tap the handle keepers upward (Fig. 13).

(5) Disconnect the window glass from the regulator arm guide (Fig. 12).

(6) Remove the division channel upper and lower attaching screws.

(7) Separate the division channel from the front window glass weatherstrip seal.

(8) Pull the division channel upward and remove the window glass from the door.

(9) Remove the keepers from the door handle with needlenose pliers and remove the handle and gasket from the door (Fig. 13 and 14).

INSTALLATION

(1) Install the gasket and the door external handle and slide the keepers into the door handle from the top (Fig. 13 and 14).

(2) Tap the retainers downward lightly to tighten the handle.

(3) Install the latch release rod and the hitch pin and attach the rod to the latch (Fig. 13).

(4) Position the window glass in the door and the channels.

(5) Install the division channel and the attaching screws.

(6) Attach the window glass to the regulator arm guide (Fig. 12).

(7) Install the door latch cover (Fig. 11).

(8) Install the door waterdam and the trim panel (Fig. 8 and 10).

FULL-METAL DOOR LATCH—YJ

REMOVAL

(1) Remove the trim panel and the waterdam from the door inner panel (Fig. 8 and 10).

(2) Remove the door latch cover (Fig. 11).

(3) Disconnect the inside release handle-to-latch rod. Disconnect the lock cylinder-to-latch rod. Disconnect the inside lock-to-latch rod. Disconnect the external handle-to-latch rod from the door latch (Fig. 15).

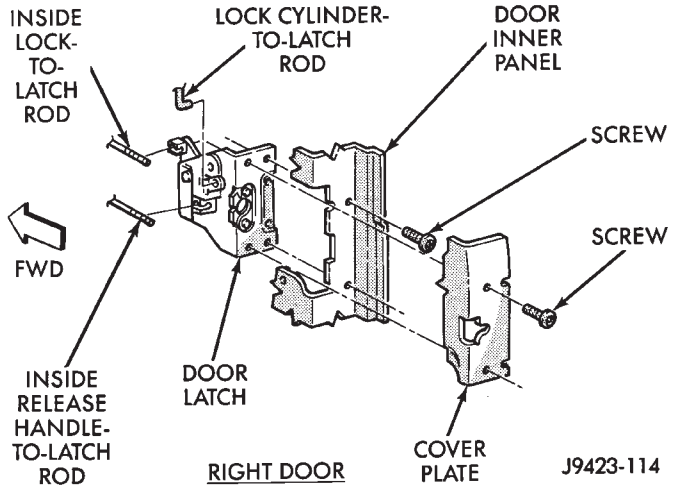

Fig. 15 Latch Removal/installation

(4) Remove the door latch attaching screws and remove the latch from the door (Fig. 15).

INSTALLATION

(1) Install the door latch with the attaching screws.

(2) Connect the rods to the latch.

(3) Install the latch cover with the cover screws.

(4) Install the door waterdam and the trim panel.

FULL-METAL DOOR HINGES—YJ

ADJUSTMENT

The doors are adjusted at the hinge attaching locations on either the body or the door. Enlarged holes are located in the body (lower hinge only) for fore, aft and tilt adjustments. Enlarged holes are also located in the door (upper and lower hinges) for up, down, fore, aft and tilt adjustments.

Prior to door adjustment or alignment, the door latch must be removed to allow the door to close freely and be properly aligned.

The door latch striker should be adjusted in or out to allow the door latch to be fully engaged. The door should be flush with the adjacent body panels.

REPLACEMENT

(1) Mark the outline of the existing hinge on the body and the door with a wax pencil for installation alignment reference.

When removing the door or hinge DO NOT discard the plastic shims or the hinge pin.

(2) Remove the hinge-to-body screws and the hinge-to-door screws (Fig. 16). Remove the hinge from the door and body.

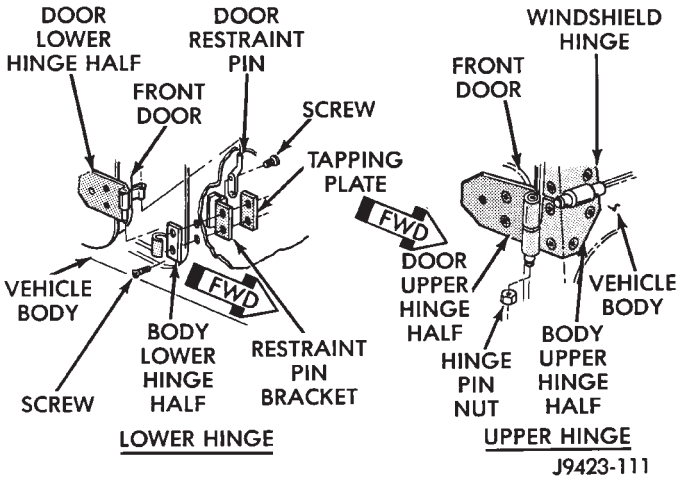

Fig. 16 Door Hinges

The upper hinge is also part of the windshield hinge (Fig. 16). When replacing it, support the windshield frame with an appropriate device prior to removal. Inspect the windshield alignment after hinge installation.

(3) Clean the replacement hinge with an appropriate solvent and dry it with compressed air.

(4) Color-coat the hinge to match the vehicle body with MOPAR exterior spray paint, or an equivalent product.

(5) Lubricate the hinge with spray lubricant.

(6) Position the hinge on the door, align carefully with the wax pencil installation alignment reference marks, and install the retaining screws (Fig. 16). Tighten screws to 17 N·m (156 in. lbs.) torque.

(7) Position the hinge on the vehicle body. Align the wax pencil marks installation alignment reference marks. Install the retaining screws (Fig. 16). Tighten screws to 17 N·m (156 in. lbs.) torque.

(8) Inspect the door alignment. Adjust, if necessary. Refer to Door Hinges—Adjustment.

FULL-METAL DOOR WEATHERSTRIP SEALS—YJ

The door weatherstrip seals are molded latex foam with a smooth rubber reinforcement layer on the outside (Fig. 17).

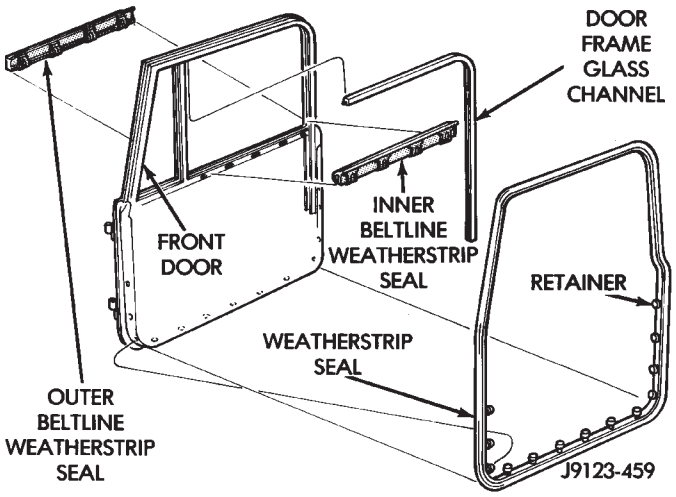

Fig. 17 Door Weatherstrip Seals

Plastic retainers are used to retain the seal on the door panel below the door beltline (Fig. 17). Above the beltline, the seal is retained in a channel formed in the door upper frame.

The beltline weatherstrip seals are retained within the

door panels by spring-clip retainers (Fig. 17).

The door frame glass channel is retained within the door frame by the press-fit between it and the frame.

WEATHERSTRIP SEAL MAINTENANCE

Cold temperatures can cause rubber seals to harden and lose resiliency. This possibly will cause the door to loosen in the body opening and result in noise. When servicing, use a dampened cloth to clean the rubber seals. Remove the foreign material from all areas where the rubber seal contacts the body panels. Apply silicone lubricant to the seals after they are cleaned.

CAUTION: Do not apply graphite, brake fluid, or wax to rubber seals.

Replacement rubber weatherstrip seals are coated with powder to prevent adhesion to the container during storage. Before installation, remove all the powder with a cloth dampened with a general purpose adhesive removal solution.

DOOR WEATHERSTRIP SEAL REPLACEMENT—YJ

REMOVAL

(1) Carefully remove the weatherstrip seal from the door with a weatherstrip seal removal tool. Pry the seal outward to separate the plastic retainers from the door panel holes.

(2) Remove the upper portion of the seal from the door upper frame with your fingers or a wooden wand.

(3) Remove the dust and residual adhesive from the door panel and body panel.

INSTALLATION

(1) Apply adhesive to the front, rear and bottom edges of the door from the beltline downward.

(2) Install the upper front corner of the seal on the door first using your fingers or a wooden wand to position the seal in the channel. Place the inner shoulder of the seal in the channel-to-window frame above the beltline.

(3) Force the retainers, starting at the rear edge of the door, into the door panel holes.

(4) Ensure that the seal is completely seated around the door.

BELTLINE SEAL—YJ

REMOVAL

(1) Carefully remove the beltline weatherstrip seal (Fig. 17) from the door with a weatherstrip seal removal tool or similar pry tool.

(2) Pry the seal upward to remove it from within the glass and door panel.

INSTALLATION

(1) Position the seal between the door panel and the glass. Force the seal downward with your fingers to seat it against the glass and panel (Fig. 18).

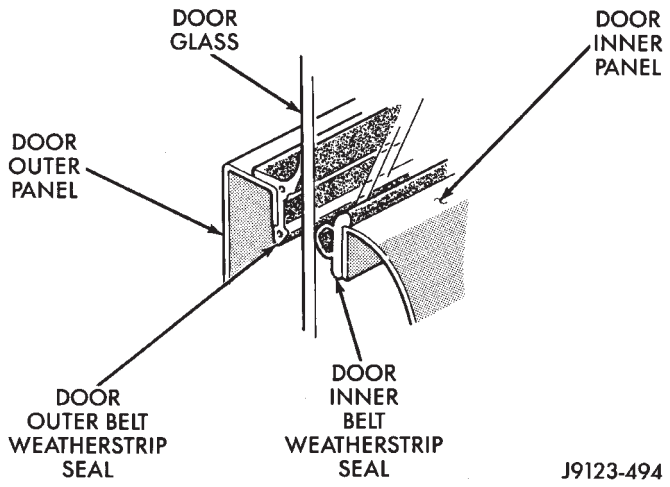

Fig. 18 Beltline Weatherstrip Seals

(2) Ensure that the seal is completely seated within the door (Fig. 18).

DOOR FRAME GLASS CHANNEL REPLACEMENT—YJ

REMOVAL

(1) Carefully remove the glass channel (Fig. 17) from the door with a pry tool.

(2) Pry the seal outward to remove it from the frame.

INSTALLATION

(1) Position the channel in the frame and force it inward with your fingers to seat it within the frame.

(2) Ensure that the seal is completely seated within the door frame.

FULL-METAL DOOR SERVICE—YJ

REMOVAL/DISASSEMBLY

(1) Open the door.

(2) Remove the door restraint strap from the pin.

(3) Remove the door latch inside release handle (Fig. 8).

(4) Remove the assist handle (Fig. 8).

(5) Remove the window glass regulator handle (Fig. 8).

(6) Remove the upper trim panel. Remove the lower trim panel by detaching the retainers around the perimeter of the trim panel (Fig. 8).

(7) Remove the waterdam from the door inner panel (Fig. 10).

(8) Remove the door latch cover plate from the door inner panel (Fig. 11).

(9) Remove the retaining screws and the door latch with the rods attached (Fig. 15).

(10) Remove the beltline weatherstrip seals from the door (Fig. 18).

(11) Remove the window glass from the regulator arm guide (Fig. 12).

(12) Carefully remove the window glass from the channel and the door.

(13) Remove the key lock cylinder from the door (Fig. 14).

(14) Remove the door outside handle keepers, disconnect the latch release rod and remove the handle from the door panel (Fig. 13).

(15) Carefully remove the weatherstrip seal from door edge (Fig. 18).

(16) Remove the retaining nuts from the door hinge pins and remove the door from the body (Fig. 16).

(17) Remove the retaining screws and the hinges from the door panel (Fig. 14).

ASSEMBLY/INSTALLATION

(1) Install the hinges on the door (Fig. 14).

(2) Position the door at the body opening, insert the hinge pins in the hinge receptacles and install the retaining nuts (Fig. 16). Tighten the nuts securely.

(3) Install the weatherstrip seal on the door edge (Fig. 18).

(4) Install the door outside handle and the keepers. Connect the latch release rod to the handle (Fig. 13).

(5) Install the key lock cylinder (Fig. 14).

(6) Position the window glass in the channel and the door.

(7) Attach the window glass to the regulator arm guide (Fig. 12).

(8) Install the beltline weatherstrip seals in the door (Fig. 18).

(9) Position the latch in the door and install the retaining screws (Fig. 15). Tighten the screws securely.

(10) Connect the latch rods (Fig. 19). Attach the inside release handle securely. Attach the rods to the latch making sure the lock position of the lock position of the latch toggle button are the same (Fig. 20).

The ends of the latch rods are threaded and the overall length of each rod is adjustable within the retainer clip. Adjust as necessary.

(11) Install the door latch cover plate on the door inner panel (Fig. 11).

(12) Install the waterdam on the door inner panel (Fig. 10).

(13) Install the interior trim panels (Fig. 8).

(14) Install the window regulator handle.

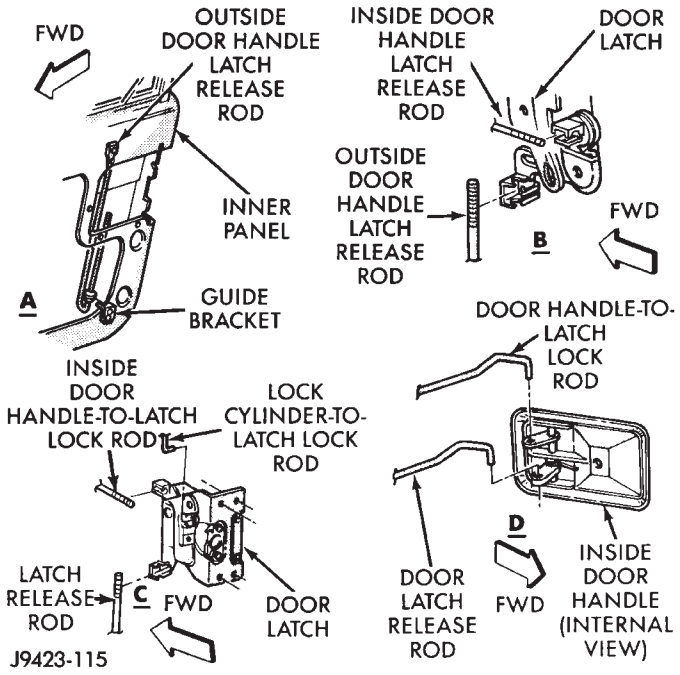

Fig. 19 Latch Rod Connections

(15) Connect the handle-to-latch rod and the lock-to-latch rod to the door latch inside release handle and install the handle (Figs. 19 and 8).

(16) Install the assist handle.

(17) Attach the restraint strap to the pin.

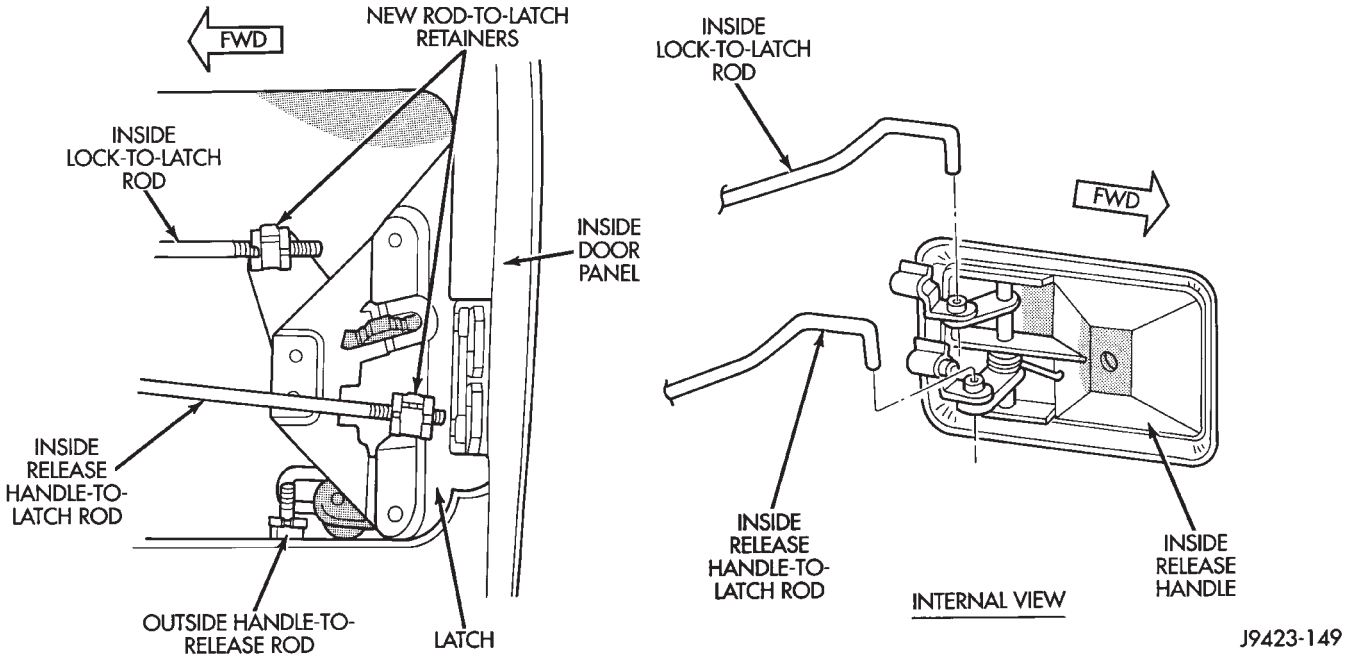

Fig. 20 Latch Rod Positions

STATIONARY GLASS

INDEX

page

Hard Top Quarter Window Glass—YJ 149
Rearview Mirror Retaining Bracket—YJ 144
Rearview Mirror—YJ 144
Stationary Glass Water Leak Detection and Repair—YJ 150
Windshield Frame Weatherstrip Seal—YJ 146
Windshield Frame—YJ 145
Windshield Glass—YJ 146
Windshield Reveal Molding—YJ 144

WINDSHIELD REVEAL MOLDING—YJ

REMOVAL

(1) Disengage the reveal molding around the perimeter of the windshield glass with an appropriate tool.

(2) Remove the moldings from the windshield frame.

(3) Inspect the reveal molding retainers. Replace the molding if it has broken, distorted or ineffective retainers.

INSTALLATION

(1) Position the reveal moldings on the windshield frame.

(2) Attach the moldings to the frame by tapping each molding with a rubber mallet to seat the retainers.

REARVIEW MIRROR—YJ

REMOVAL/INSTALLATION

(1) Loosen the mirror set screw and slide the mirror up and off the retaining bracket (Fig. 1).

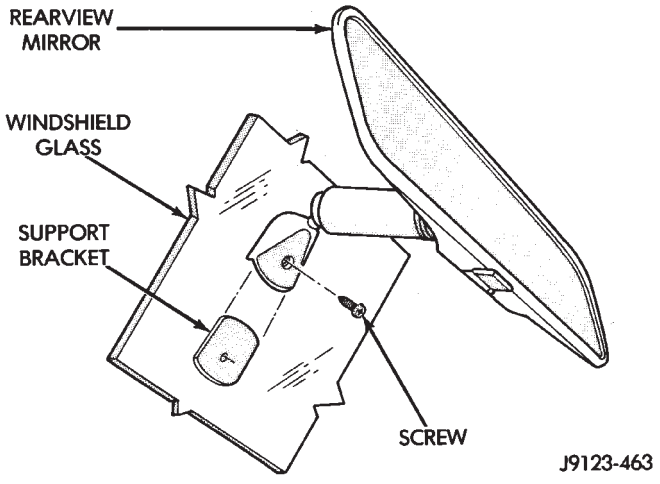

Fig. 1 Rearview Mirror Removal/Installation

(2) To install the mirror, slide the mirror onto the retaining bracket and install the set screw.

(3) Tighten the mirror setscrew to 1 N·m (9 in-lbs) torque.

CAUTION: Do not over-tighten the setscrew because glass chipping and/or breakage could result.

REARVIEW MIRROR RETAINING BRACKET—YJ

REPLACEMENT

(1) Mark reference position lines for the mirror retaining bracket on the **outside** of the windshield glass with a wax pencil. Mark both horizontal and vertical reference lines for accurate bracket positioning.

(2) If the vinyl pad remained on the windshield glass, soften and remove it with a heat gun. Application of low heat will be sufficient to soften the pad.

(3) Thoroughly clean the bracket contact area on the glass. Use a mild abrasive cleaning powder on a cloth saturated with isopropyl (rubbing) alcohol. Final-clean the glass with a paper dampened with alcohol.

(4) Lightly sand the contact surface on the replacement bracket with fine grit sandpaper. Next, wipe the bracket contact surface clean with a paper towel and alcohol.

(5) Apply adhesive accelerator to the contact surface on the mirror bracket according to the following instructions:

- crush the vial in the plastic housing of the accelerator to saturate the felt applicator.
- remove the paper sleeve.
- apply a generous amount of accelerator to the contact surface on the mirror retaining bracket.
- do not touch the retaining bracket contact surface after the accelerator has been applied.
- allow the accelerator to dry for at least five minutes. and

(6) Apply accelerator to bracket contact surface on the windshield glass. Allow the accelerator to dry for one minute. Do not touch the glass contact surface after the accelerator has been applied.

(7) Install the mirror retaining bracket according to the following instructions:

• Apply one drop of adhesive at the center of the retaining bracket contact surface on the windshield glass.
• Immediately apply an even coat of adhesive to the contact surface on the retaining bracket.
• Align the retaining bracket with the position reference lines on the windshield glass.
• Press and hold the retaining bracket in-place for at least one minute.

Ensure that the mirror retaining bracket is correctly aligned because the adhesive will cure rapidly.

(8) Allow the adhesive to cure for 8-10 minutes, then remove any residue adhesive with an alcohol dampened cloth.

(9) Allow the adhesive to cure for an additional 8-10 minutes before installing the mirror on the retaining bracket (Fig. 1).

WINDSHIELD FRAME—YJ

SERVICE INFORMATION

The windshield frame and glass can be removed as a unit for service access (Fig. 2). The windshield frame can also be tilted forward to a full horizontal position and retained in-place with the strap when complete removal is not necessary.

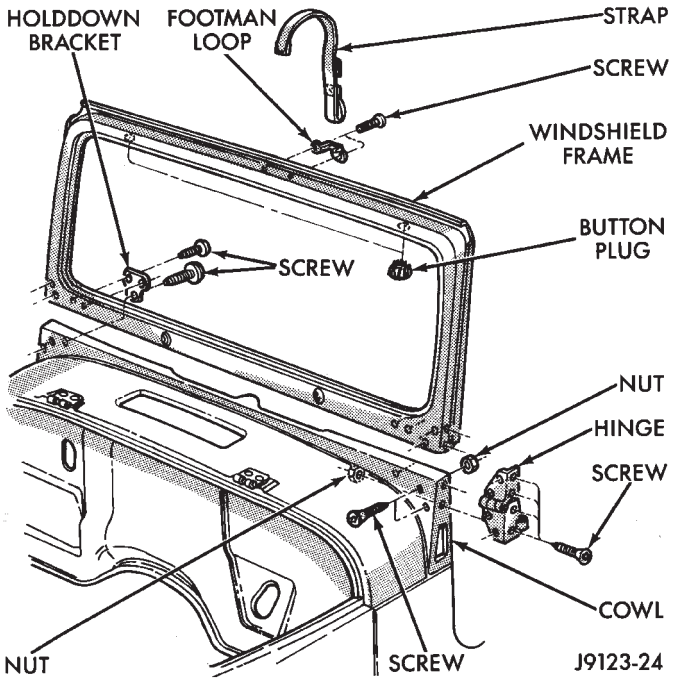

Fig. 2 Windshield Frame Removal/Installation

REMOVAL

(1) Remove the windshield wipers. Refer to the removal procedure.

(2) For vehicles equipped with a soft top, disconnect the fabric top from the windshield frame retainer rail. If necessary, refer to the soft top removal procedure.

(3) For vehicles equipped with a hard top, disconnect the top from the windshield frame. Loosen the retaining screws, tilt the top rearward and support the top away from the windshield frame (Fig. 3).

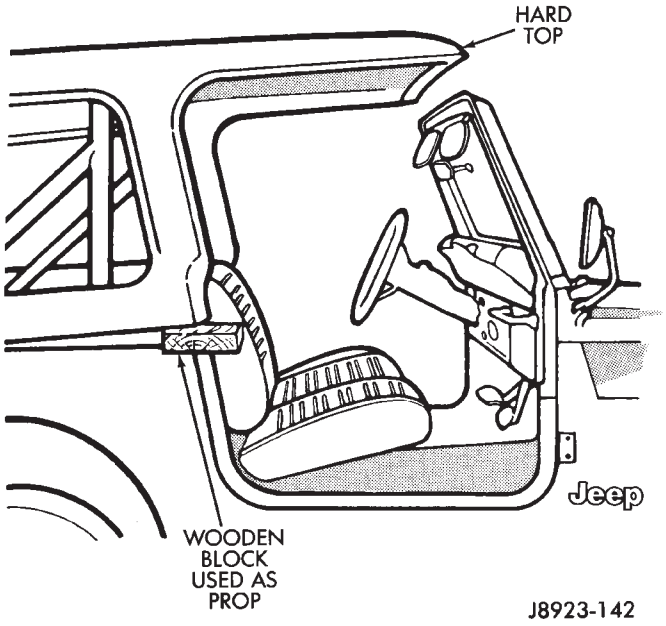

Fig. 3 Hard Top Detached From Windshield Frame

(4) Remove the retaining screws and the windshield/door hinges from the cowl (Fig. 2).

(5) Remove the holddown bracket retaining screws from the cowl (Fig. 2).

(6) Remove the windshield frame and glass from the cowl as a unit (Fig. 2).

(7) If necessary, remove the sunvisors.

INSTALLATION

(1) Position the windshield frame on the cowl.

(2) Install the holddown bracket retaining screws in the cowl.

(3) Install the windshield/door hinge retaining screws.

(4) Connect the top to the windshield frame. If necessary, refer to the applicable top installation procedure.

(5) For vehicles equipped with a soft top, connect the fabric top to the windshield frame retainer rail. If necessary, refer to the soft top installation procedure.

(6) For vehicles equipped with a hard top, remove the supports, tighten the retaining screws, and connect the top to the windshield frame.

(7) Install the windshield wipers. Refer to the installation procedure.

(8) If removed, install the sunvisors.

WINDSHIELD FRAME WEATHERSTRIP SEAL—YJ

REMOVAL

The windshield frame weatherstrip seal can be removed and installed with the frame tilted forward to the full horizontal position (Fig. 4).

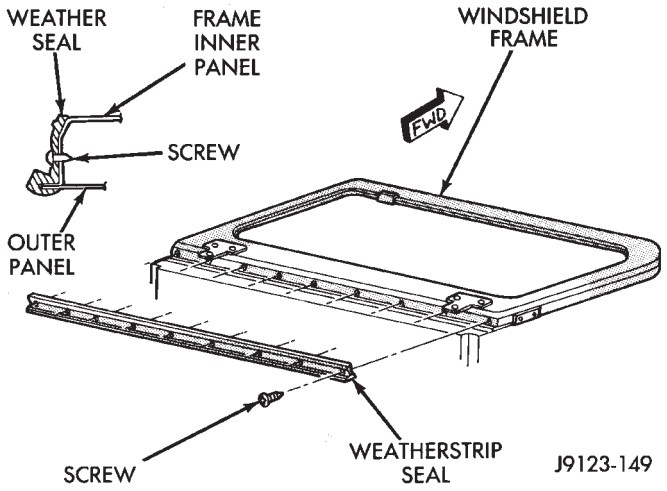

Fig. 4 Windshield Frame Weatherstrip Seal

(1) Disconnect the top from the windshield frame. If necessary, refer to the windshield frame removal procedure.

(2) Remove the holddown bracket retaining screws from the cowl.

(3) Tilt the windshield frame forward to the full horizontal position (Fig. 4).

(4) Remove the retaining screws and the weatherstrip seal from the windshield frame (Fig. 4).

INSTALLATION

(1) Position the weatherstrip seal on the windshield frame. Ensure that the frame outer panel flange is properly seated in the seal groove.

(2) Install the seal retaining screws in the windshield frame (Fig. 4).

(3) Tilt the windshield frame rearward to the full vertical position.

(4) Install the holddown bracket retaining screws in the cowl.

(5) Connect the top to the windshield frame. If necessary, refer to the windshield frame installation procedure.

WINDSHIELD GLASS—YJ

The one-piece windshield glass (Fig. 5) is comprised of two laminated sheets of glass. The glass is bonded to the windshield frame with urethane adhesive (Fig. 5). This method of windshield glass installation complies with the applicable Federal Motor Vehicle Safety Standards (FMVSS).

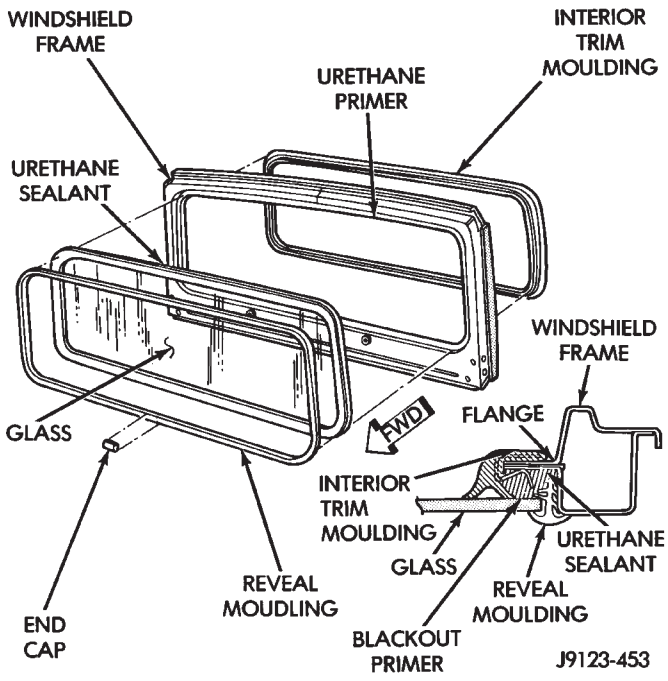

Fig. 5 Windshield Components

REMOVAL/INSTALLATION METHODS

For windshield glass removal use a razor knife or an electric hot knife to cut through the urethane. This removal method applies in all instances.

Depending on the circumstances, either one of two windshield glass installation methods can be used.

The short method is used when the windshield glass is removed intact and the windshield frame pinchweld flanges do not require repair.

The extended method must be used when a windshield frame and/or a pinchweld flange is damaged. The extended method must also be used when the urethane no longer adheres to either the windshield glass or the frame pinchweld flanges.

Remove windshield glass according to the procedure described below. Next, determine the condition of the adhesive bond and the windshield frame flanges, and then select the installation method required.

When the windshield glass short installation method is used, an even, uniform bead of urethane adhesive must remain on the frame pinchweld flanges. This adhesive bead is needed as a base for the replacement glass.

If the extended installation method is used, the original windshield interior trim molding must be removed and discarded. The adhesive cannot be removed from the original molding.

REMOVAL

(1) Cover body surface areas with protective covering to avoid paint damage and extra clean-up time.

(2) Remove the windshield wiper arms, the reveal molding (Fig. 5) and the rearview mirror. If necessary, refer to the applicable removal procedures.

(3) Make a preliminary cut around the **perimeter**

of the windshield glass along the glass edge with a razor knife.

CAUTION: When cutting through the urethane with a hot knife blade, do not allow the knife blade to remain stationary at any location.

(4) Cut the adhesive bead with a hot knife and a straight or hooked knife blade.

(5) Start the hot knife blade between the glass and the urethane. Next, cut the adhesive as close to the glass edge as possible. Allow as much adhesive to remain on the frame flange as possible. **For best cutting results, clean the knife blade frequently with steel wool while the blade is hot.**

(6) Remove the windshield glass from the frame (Fig. 5).

(7) After the hot knife blade has cooled, clean the hot knife blade with solvent and a cloth. Sharpen the blade with a fine-tooth file.

(8) If the extended windshield glass installation method will be used, remove and discard the interior trim molding (Fig. 5).

INSTALLATION—SHORT METHOD

Normally, after a windshield is installed, the rearview mirror bracket also requires installation. If so, refer to the rearview mirror bracket replacement procedure. **Do not install bracket until after windshield installation is completed.**

(1) Inspect the windshield frame pinchweld flanges (Fig. 5) Prime any bare spots with urethane primer. Allow a minimum of 18 minutes for dry time.

(2) Inspect the urethane bead for high spots. Level the bead by shaving off high spots with a razor knife. This is necessary for a flush-fit of the windshield glass.

(3) Inspect the windshield molding. Replace the molding if it has broken, distorted or ineffective retainers.

(4) Clean the outer edge of the windshield glass with naphtha or a similar product.

(5) Prime the outer perimeter of the interior side of the glass 16 mm (5/8 inch) from the edge. Use a wipe-off type urethane primer and wipe the glass dry after primer application.

(6) Place the windshield glass in the frame on the pinchweld flanges and inspect for gaps in the urethane adhesive. Gaps in excess of 3 mm (1/8 inch) must be filled with additional urethane adhesive.

(7) Adjust windshield glass position until it is aligned with the flanges and the adhesive. Next, make alignment marks on glass and body with a grease pencil.

(8) Remove the windshield glass and position it on a flat surface.

(9) If the replacement windshield glass does not have blackout primer:

- Attach a 25-mm (1-in) wide masking tape band around the interior side of the glass 16 mm (5/8 in) from the edge of the glass (Fig. 6).
- **Attach the tape only to the interior side of the glass.**
- Thoroughly mix and apply blackout primer to the 16 mm (5/8 in) surface area around the interior side of the glass (Fig. 6).
- Allow the primer to dry for at least 10-12 minutes.

(10) Cut the urethane adhesive applicator nozzle (Fig. 7).

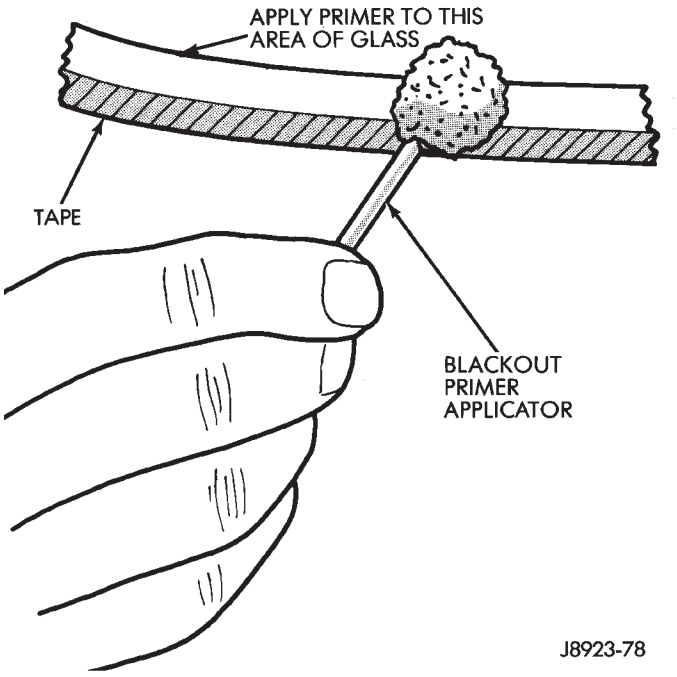

Fig. 6 Blackout Primer Application

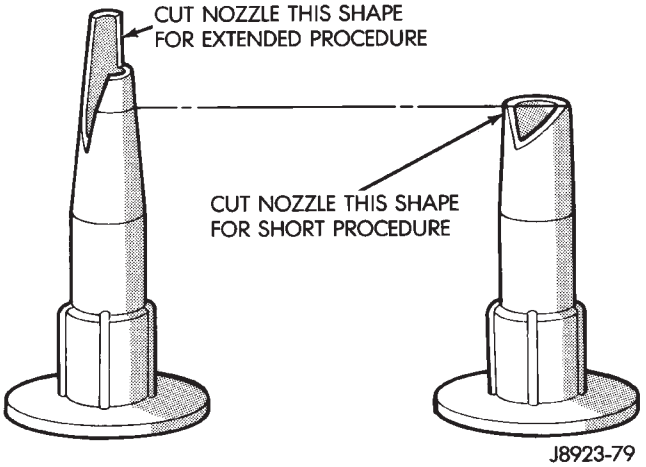

Fig. 7 Applicator Nozzle Preparation

(11) Apply a 3-mm (1/8-in) diameter bead of urethane to the surface area.

CAUTION: Be prepared to install the windshield glass immediately after applying the adhesive. The adhesive begins to cure within 10-15 minutes.

(12) Align the windshield with the grease pencil marks (or the tape strips) and position windshield on frame flanges.

(13) Force the windshield glass inward just enough to wet-out and set urethane. Use care to avoid excessive squeeze-out of adhesive.

(14) Water test the windshield with a cold water spray after installation. Do not direct high pressure streams of water directly at the urethane. Use a moderate spray only. If any leaks are detected, apply urethane as necessary.

(15) Install the windshield reveal molding and (if used) remove the masking tape from the inner surface of the glass.

(16) Install all removed components and clean the vehicle. If necessary, refer to the applicable installation procedures.

(17) Open windows and liftgate to prevent pressure build-up while the urethane is curing.

(18) Install the rearview mirror on the bracket and tighten the mirror setscrew with 2 N·m (15 in-lbs) torque.

INSTALLATION—EXTENDED METHOD

Normally, after a windshield is installed, the rearview mirror bracket also requires installation. **Do not install the bracket until after the windshield installation is completed.**

(1) Remove all of the original urethane from all the frame pinchweld flanges. Use an electric hot knife and a plow-type knife blade to remove the adhesive.

(2) Inspect and repair the windshield frame and the pinchweld flanges as necessary.

(3) Inspect and replace the reveal molding if the retainers are damaged.

(4) Prime the frame pinchweld flanges with a urethane base primer. However, if the flange is topcoated with paint, prime the flanges with a paint finish primer. **This is important because urethane adhesive will not adhere to all top coat paints.**

(5) Install the replacement interior trim molding (Fig. 5) on the frame pinchweld flanges (Fig. 5).

(6) Install and inspect the fit of the windshield glass on the pinchweld flanges according to the following instructions:

- Position the windshield glass on the flanges and adjust the position until it is correctly aligned within the windshield frame.
- Measure the gap between the frame and the glass around the entire perimeter of the glass and the flange.
- The gap should be at least 3 mm (1/8 in) but no more than 6 mm (1/4 in) at any point around the perimeter, and the flanges should be in complete contact with the glass around the perimeter of the frame.

(7) If the pinchweld flanges require repair, remove the windshield glass and straighten, align, or repair the flange(s) as necessary.

(8) Position the windshield on the flanges and inspect the windshield fit again. If the fit is acceptable, mark windshield final position on the glass and the frame. The marks (or masking tape) will be used for installation alignment reference.

(9) If the replacement windshield glass does not have blackout primer:

- Attach a 25-mm (1-in) wide masking tape band around the interior side of the glass 16 mm (5/8 in) from the edge of the glass (Fig. 6).
- **Attach the tape only to the interior side of the glass.**
- Thoroughly mix and apply blackout primer to the 16 mm (5/8 in) surface area around the interior side of the glass (Fig. 6).
- Allow the primer to dry for at least 10-12 minutes.

(10) Cut the urethane adhesive applicator nozzle (Fig. 7).

(11) Apply a 3-mm (1/8-in) diameter bead of urethane to the surface area.

CAUTION: Be prepared to install the windshield glass immediately after applying the adhesive. The adhesive begins to cure within 10-15 minutes.

(12) Align windshield with reference marks (or the tape strips) and position it on the frame pinchweld flanges.

(13) Force the windshield glass inward just enough to wet-out and set urethane. Use care to avoid excessive squeeze-out of adhesive.

(14) Water test the windshield with a cold water spray after installation. Do not direct high pressure streams of water directly at the urethane. Use a moderate spray only. If any leaks are detected, apply urethane as necessary.

(15) Install the windshield reveal molding and (if used) remove the masking tape from the inner surface of the glass.

(16) Install all the other previously removed components and clean the vehicle. If necessary, refer to the applicable installation procedures.

(17) Open windows and liftgate to prevent pressure build-up while the urethane is curing.

(18) Install the rearview mirror on the bracket and tighten the mirror setscrew to 2 N·m (15 in-lbs) torque.

HARD TOP QUARTER WINDOW GLASS—YJ

REMOVAL

(1) Cover surface areas with protective covering to avoid paint damage and extra clean-up time.

(2) Remove the reveal molding (Fig. 8).

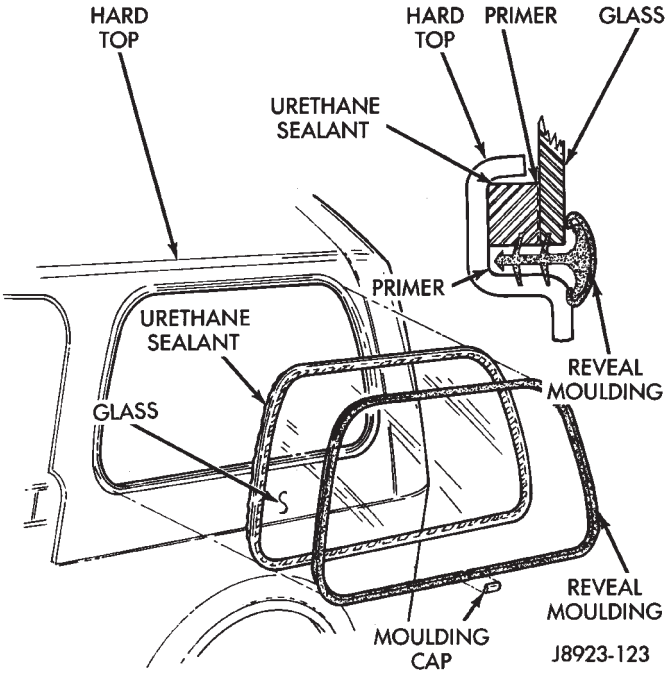

Fig. 8 Hard Top Quarter Window Glass

(3) Make a preliminary cut around the perimeter of the window glass along the glass edge with a razor knife.

CAUTION: When cutting through the urethane with a hot knife blade, do not allow the knife blade to remain stationary at any location.

(4) Cut the adhesive bead with a hot knife and a hooked knife blade.

(5) Start hot knife between glass and urethane. Next, cut the adhesive as close to the glass edge as possible. Allow as much adhesive to remain on the window opening flange as possible. **For best cutting results, clean the knife blade frequently with steel wool while the blade is hot.**

(6) Remove the window glass from the opening (Fig. 8).

(7) After the hot knife blade has cooled, clean the hot knife blade with solvent and a cloth. Sharpen the blade with a fine-tooth file.

INSTALLATION

(1) Inspect the window opening (Fig. 8) Prime any bare spots with urethane primer. Allow a minimum of 18 minutes for dry time.

(2) Inspect the urethane bead for high spots. Level the bead by shaving off high spots with a razor knife. This is necessary for a flush-fit of the window glass.

(3) Inspect the window molding. Replace the molding if damaged.

(4) Clean the outer edge of the window glass with naphtha or a similar product.

(5) Prime the outer perimeter of the interior side of the glass 16 mm (5/8 inch) from the edge. Use a wipe-off type urethane primer and wipe the glass dry after primer application.

(6) Place windshield in the opening and inspect for gaps in the urethane. Gaps in excess of 3 mm (1/8 inch) must be filled with urethane.

(7) Adjust window glass position until it is aligned with the opening and the adhesive.

(8) Remove the window glass and position it on a flat surface.

(9) If the replacement window glass does not have blackout primer:

- Attach a 25-mm (1-in) wide masking tape band around the interior side of the glass 16 mm (5/8 in) from the edge of the glass.
- **Attach the tape only to the interior side of the glass.**
- Thoroughly mix and apply blackout primer to the 16 mm (5/8 in) surface area around the interior side of the glass.
- Allow the primer to dry for at least 10-12 minutes.

(10) Apply a 3-mm (1/8-in) diameter bead of urethane to the surface area with the blackout primer on the interior side of the glass.

CAUTION: Be prepared to install glass immediately after applying the adhesive. The adhesive begins to cure within 10-15 minutes.

(11) Align the window glass with the grease pencil alignment reference marks (or the tape strips) and position it in the window opening.

(12) Force glass inward just enough to wet-out and set urethane. Use care to avoid excessive squeeze-out of adhesive.

(13) Water test with a cold water spray after installation. Do not direct high pressure streams of water directly at the urethane. Use a moderate spray only. If any leaks are detected, apply urethane as necessary.

(14) Install the window reveal molding and (if used) remove the masking tape from the inner surface of the glass.

(15) Clean the vehicle.

(16) Open windows and liftgate to prevent pressure build-up while the urethane is curing.

STATIONARY GLASS WATER LEAK DETECTION AND REPAIR—YJ

The sources of water leaks around windshield/window glass can be sealed without removing the windshield/window glass. If the glass is firmly bonded and only has a small leak, seal areas with a liquid butyl sealant. However, if weatherstrip seal or urethane sealant has large breaks, a urethane sealant must be used.

LEAK TEST

Water test the windshield/window with a spray only. **Do not use hard streams of water.** Work from the bottom to the top of the windshield/window.

Water test the windshield/window with a spray only. **Do not use hard streams of water.** Work from the bottom to the top of the windshield/window glass.

If a water leak exists between the glass and weatherstrip seal (or between the seal and a body flange):

- Push the glass outward at the leak area, and determine the extent of the gap.

Push the glass outward while a helper sprays the windshield/window glass with water.

SEALING MINOR LEAK AREAS

(1) Thoroughly clean and remove all foreign material from the leak area. Dry the area with compressed air.

(2) Seal the leak area with butyl sealant. Allow the sealant to cure for at least 1/2 hour. Next, water test the glass to ensure that the leak area is sealed.

SEALING MAJOR LEAK AREAS

(1) Thoroughly clean the leak area.

(2) As applicable, apply primer to either glass or weatherstrip seal leak area. Use blackout primer on the glass and urethane primer on the weatherstrip seal.

(3) Apply urethane to the leak area. Use an adhesive cartridge with a pointed nozzle.

(4) Water test glass immediately with cold water spray. Allow the water to spill over the edge of glass and weatherstrip seal.

(5) Apply additional adhesive, if necessary.

(6) Remove any excess adhesive.

INTERIOR COMPONENTS

INDEX

	page
Add-A-Trunk—YJ	157
Bucket Seats—YJ	153
Carpet—YJ	156
Floor Consoles—YJ	155
Front Shoulder Belts—YJ	154
Glove Box—YJ	152
Instrument Cluster and Gauge Housings—YJ	151
Instrument Cluster Bezel—YJ	151
Instrument Panel Components—YJ	152
Instrument Panel—YJ	151
Rear Bench Seat—YJ	153
Rear Shoulder Belts—YJ	154
Seats—YJ	153
Sunvisors—YJ	155

INSTRUMENT PANEL—YJ

The instrument panel is constructed of sheet metal and is attached to cowl panel with screws. The instrument panel and defroster grille pad is attached to the instrument panel with screws.

INSTRUMENT CLUSTER AND GAUGE HOUSINGS—YJ

REMOVAL

(1) Remove the instrument cluster and gauge housing attaching screws (Fig. 1, 2 and 3).

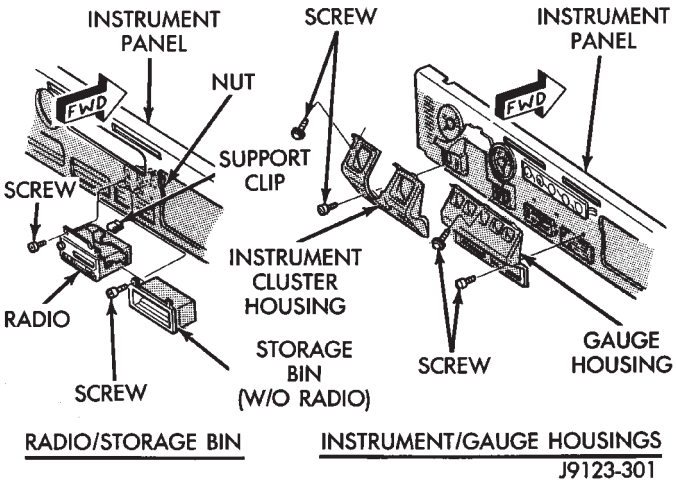

Fig. 1 Instrument Cluster/Gauge Housing and Radio

(2) Disconnect the switch illumination bulb socket from the instrument cluster housing (Fig. 4). Remove the housings from the instrument panel (Fig. 1).

INSTALLATION

(1) Position the instrument cluster and gauge housings on the instrument panel (Fig. 1). Connect the switch illumination bulb socket to the instrument cluster housing (Fig. 4).

(2) Install the attaching screws (Fig. 1, 2 and 3). Tighten the screws to 3 N·m (24 in-lbs) torque.

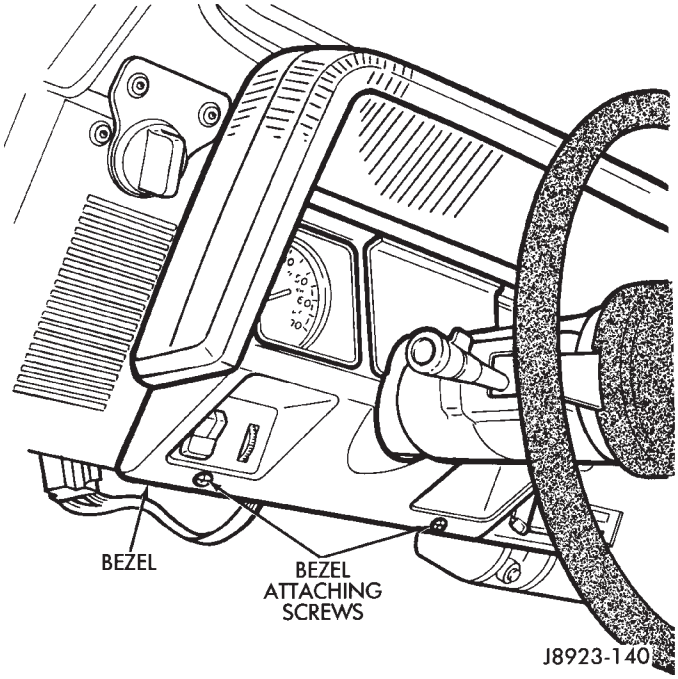

Fig. 2 Instrument Cluster Housing Lower Screws

INSTRUMENT CLUSTER BEZEL—YJ

REMOVAL

(1) Remove the instrument cluster housing attaching screws (Fig. 1, 2 and 3).

(2) Disconnect the switch illumination bulb from instrument cluster (Fig. 4). Remove the housing from the instrument panel (Fig. 1).

(3) Remove the bezel retaining screws.

(4) Disconnect the accessory switch, warning indicator, rheostat and lamp wire harness connectors from the bezel (Fig. 5).

(5) Remove the bezel from the instrument panel (Fig. 6).

INSTALLATION

(1) Position bezel at the instrument panel and connect accessory switch, warning indicator, rheostat and lamp wire harness to bezel.

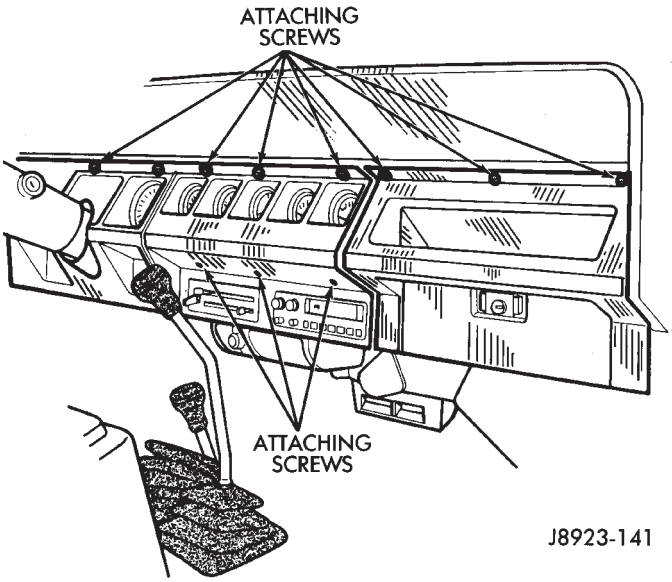

Fig. 3 Instrument Gauge Housing Screws

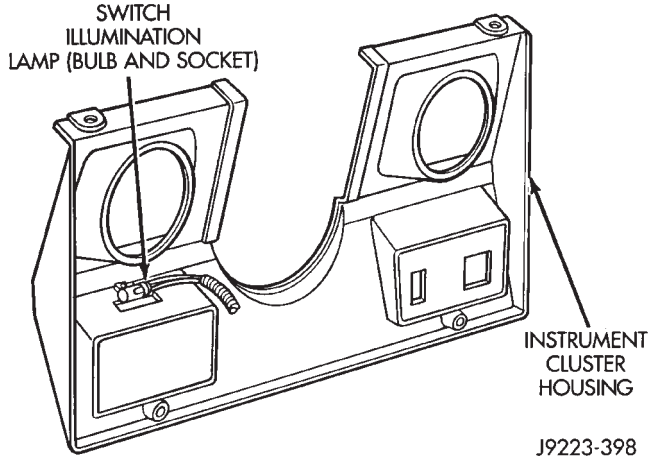

Fig. 4 Instrument Cluster Housing and Lamp

(2) Install the bezel screws. Tighten the screws to 3 N·m (24 in-lbs) torque.

(3) Position the instrument cluster housing on the instrument panel (Fig. 1). Connect the switch illumination bulb socket to the instrument cluster housing (Fig. 4).

(4) Install the attaching screws (Fig. 1, 2 and 3). Tighten the screws to 3 N·m (24 in-lbs) torque.

INSTRUMENT PANEL COMPONENTS—YJ

For service procedures regarding individual I/P components refer to Group 8, Electrical.

GLOVE BOX—YJ

REMOVAL

(1) Remove the glove box-to-instrument panel retaining screws (Fig. 7).

(2) Pull the glove box housing out of the instrument panel opening (Fig. 14).

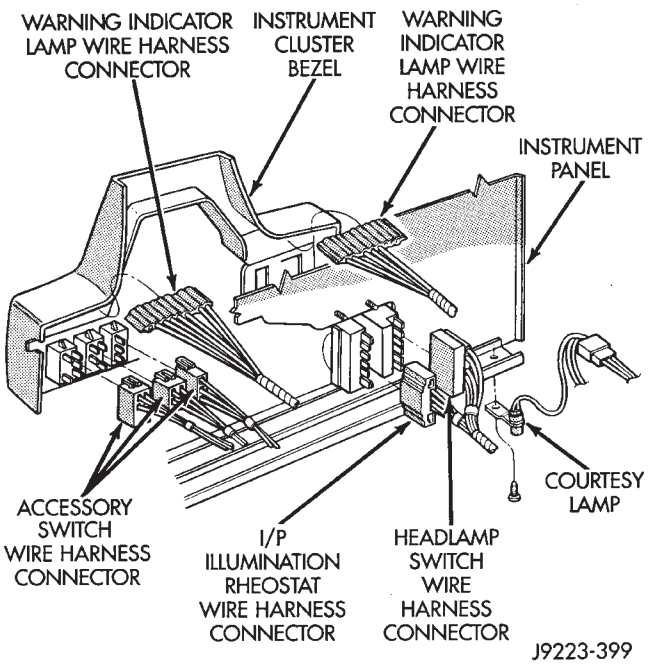

Fig. 5 Instrument Cluster Bezel

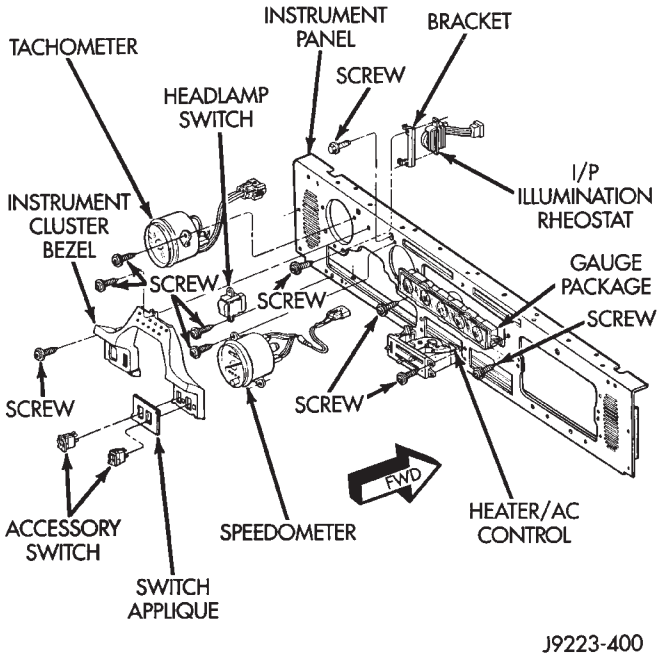

Fig. 6 Instrument Panel Components

INSTALLATION

(1) Position the glove box housing in the instrument panel opening.

(2) Install the glove box-to-instrument panel screws. Tighten the screws securely.

DOOR AND HINGE

The glove box door hinge attaching screw holes are elongated for adjustment. The hinge screws can be loosened and the door moved in direction for the best fit within the door opening.

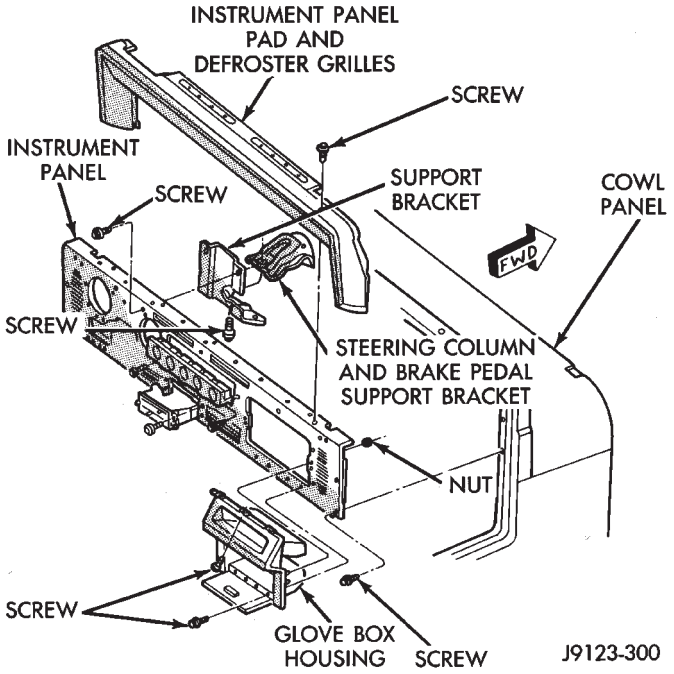

Fig. 7 Glove Box Removal/Installation

REMOVAL

(1) Remove the hinge-to-glove box housing retaining screws.

(2) Remove the door and the hinge from the glove box housing.

(3) If necessary, remove the retaining screws and the hinge from the glove box door.

INSTALLATION

(1) If removed, install the hinge on the glove box door with screws. Tighten the screws securely.

(2) Position the glove box door and hinge on the glove box housing.

(3) Install the hinge-to-glove box housing screws and adjust the door for proper fit within the opening. Tighten the screws securely.

DOOR LATCH STRIKER ADJUSTMENT

The glove box door lock cylinder latch striker is attached to the glove box housing opening with screws. The striker can be moved in or out for adjustment.

SEATS—YJ

Bucket-type front seats are standard on YJ vehicles. The rear passenger seat is a forward pivoting/folding, bench-type seat.

BUCKET SEATS—YJ

The passenger-side (RH), front bucket seat frame is the tilt-type (Fig. 1). The driver-side (LH) seat is fixed in-place. Both the passenger-side (RH) seat and the driver-side (LH) seat have fore-and-aft track adjustment.

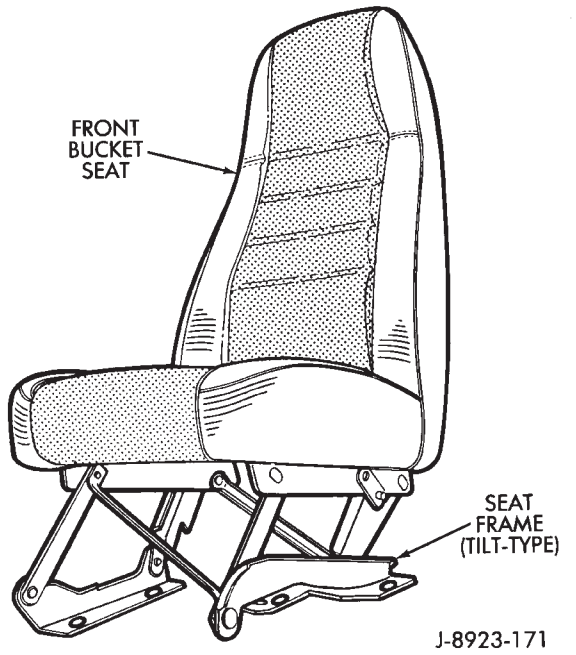

Fig. 1 Passenger-Side Bucket Front Seat

REMOVAL

(1) Remove the bolts attaching the seat frame to the floor panel (Fig. 2).

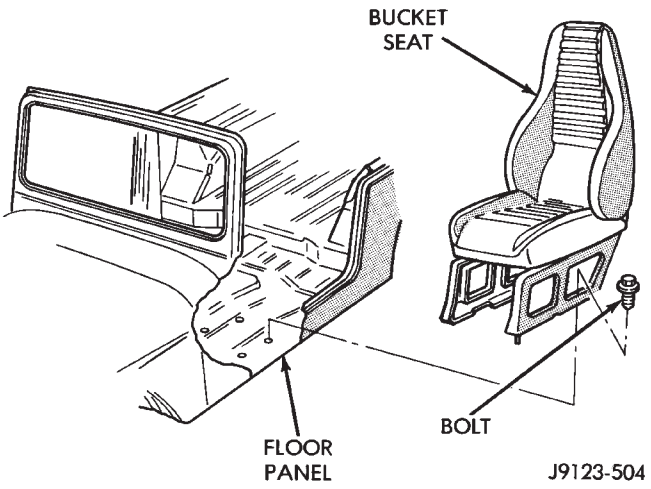

Fig. 2 Bucket Front Seat

(2) Remove the seat from the vehicle.

INSTALLATION

(1) Position the seat in the vehicle.

(2) Install seat frame bolts into floor panel. Tighten to 33 N·m (25 ft. lbs.) torque.

REAR BENCH SEAT—YJ

The rear bench seat pivot brackets are attached to the floor panel with screws. The front of the seat is attached to the pivot brackets with washers and hitch pins.

If the floor brackets are not to be replaced, it is not necessary to remove the rear screws to remove the rear seat. Follow step (3) for seat disengagement.

REMOVAL

(1) Disengage the strikers from the latches (Fig. 3).

(2) Remove the screws attaching the seat frame to

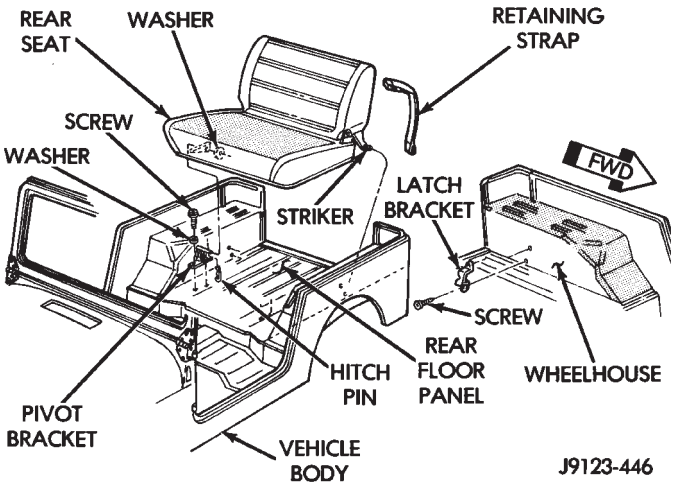

Fig. 3 Pivoting/Folding, Bench-Type Rear Seat

the floor panel.

(3) Remove the hitch pin, disengage the seat frame from the pivots and remove the seat from the vehicle (Fig. 3).

INSTALLATION

(1) Position the seat on the rear floor panel and engage the seat frame with the pivots.

(2) Install the seat frame screws to the floor panel. Tighten to 37 N·m (28 ft. lbs.) torque.

(3) Install the hitch pin.

(4) Pivot the seat rearward and engage the strikers with the latch brackets.

FRONT SHOULDER BELTS—YJ

REMOVAL

(1) Remove the cover and the shoulder belt buckle anchor bolt from the floor panel (Fig. 4).

(2) Remove the shoulder belt buckle from the floor panel (Fig. 4).

(3) Remove the cap, shoulder belt upper anchor bolt, washer and guide from the sport bar.

(4) Remove the retractor anchor bolt from the door sill (Fig. 4).

(5) Remove the anchor bolt that attaches the lower part of the shoulder belt to the floor panel (Fig. 4).

(6) Remove the shoulder belt from the vehicle.

CAUTION: Inspect the shoulder belt for evidence of wear, cuts and fraying. Replace any belt that is damaged.

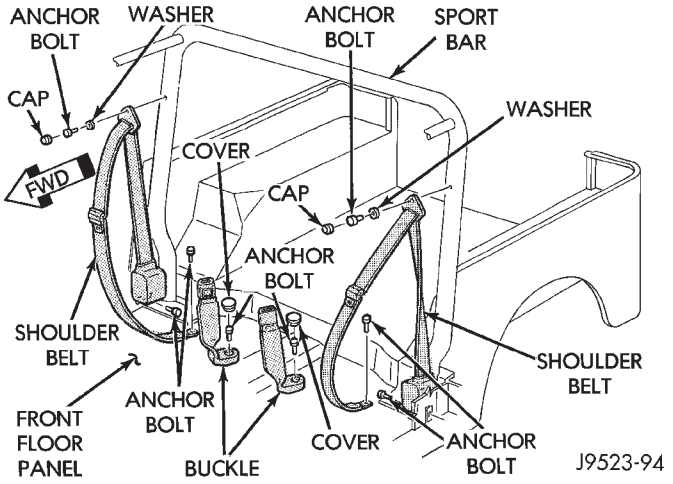

Fig. 4 Front Shoulder Belts

INSTALLATION

(1) Position the end of the shoulder belt at the floor panel and the retractor at the door sill.

(2) Install the anchor bolts (Fig. 4). Tighten the bolts to 41 N·m (30 ft-lbs) torque.

(3) Position the shoulder belt guide on the sport bar and install the anchor bolt (Fig. 4). Tighten the bolt to 41 N·m (30 ft-lbs) torque.

(4) Install the cap on the anchor bolt.

(5) Install the shoulder belt buckle at the floor panel with the anchor bolt. Tighten the bolt to 41 N·m (30 ft-lbs) torque.

(6) Install the cover on the anchor bolt.

REAR SHOULDER BELTS—YJ

REMOVAL

(1) Remove the shoulder belt buckle anchor bolt from the rear floor panel.

(2) Remove the shoulder belt buckle from the rear floor panel.

(3) Remove the shoulder belt upper anchor bolt, washer and support/guide from the sport bar (Fig. 5).

(4) Remove the retractor anchor bolt from the quarter panel.

(5) Remove the anchor bolt that attaches the lower part of the shoulder belt to the floor panel.

(6) Remove the shoulder belt from the vehicle.

INSTALLATION

(1) Position the lower end of the shoulder belt at the floor panel and the retractor at the quarter panel.

(2) Install the anchor bolts. Tighten the bolts to 41 N·m (30 ft-lbs) torque.

(3) Position the shoulder belt support/guide on the sport bar and install the anchor bolt (Fig. 5). Tighten the bolt to 41 N·m (30 ft-lbs) torque.

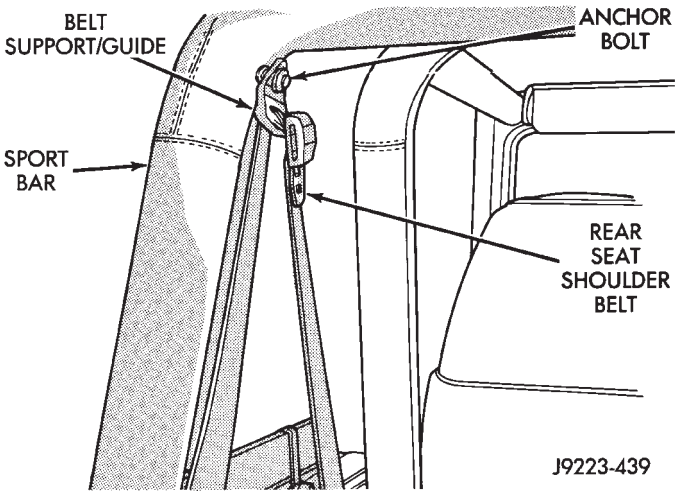

Fig. 5 Rear Shoulder Belt

(4) Install the shoulder belt buckle at the floor panel with the anchor bolt. Tighten the bolt to 41 N·m (30 ft-lbs) torque.

SUNVISORS—YJ

REMOVAL

(1) Remove the screws that attach the sunvisor arm support brackets to the windshield frame (Fig. 6).

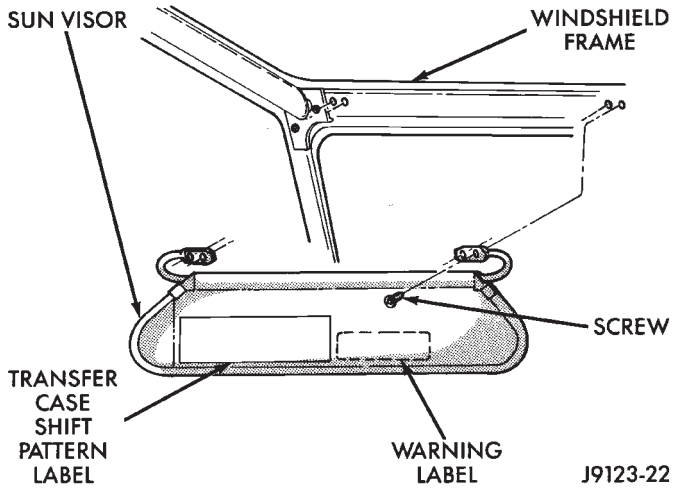

Fig. 6 Sunvisor Removal/Installation

(2) Remove the sunvisor from the windshield frame.

(3) Remove the sunvisor from the vehicle.

INSTALLATION

(1) If applicable, replace the labels (Fig. 6).

(2) Position the sunvisor on the windshield frame and align the arm support bracket holes with the frame.

(3) Install the screws that attach the sunvisor arm support brackets to the frame. Tighten the screws securely.

FLOOR CONSOLES—YJ

The floor console (Fig. 7) are fabricated from molded plastic material. The console covers have a locking top and provisions for beverage containers.

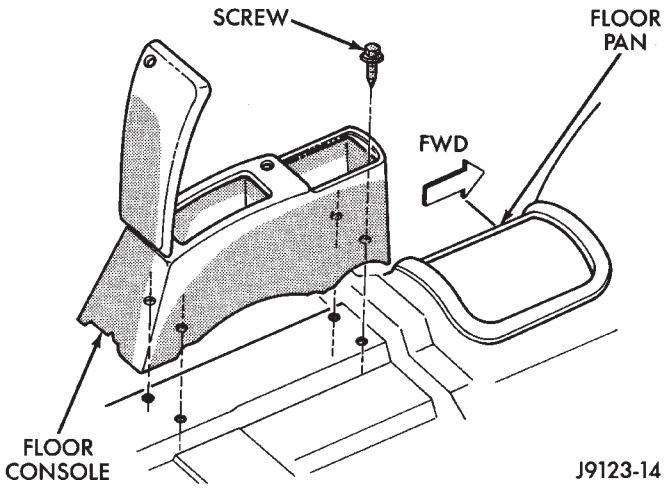

Fig. 7 Floor Console

REMOVAL

(1) Open the console cover.

(2) Remove the screws that attach the console to the floor panel (Fig. 7).

(3) Remove the console from the vehicle.

INSTALLATION

(1) Position the console in the vehicle.

(2) Align the console screw holes with the holes in the floor panel and install the attaching screws.

(3) Close and the console cover.

COVER AND SEAL REPLACEMENT

Console cover replacement involves removing the hinge screws from the console, and components. The seal can be replaced with the cover in the open position.

COVER LOCK REPLACEMENT

(1) Open the console cover.

(2) Remove the screw that attaches the retainer to the lock and then remove the retainer from the lock (Fig. 8).

(3) Remove the lock, cylinder and key as a unit from the console cover (Fig. 8).

(4) Manually position the lock latch to simulate a closed cover position.

(5) Insert the key and cylinder into the lock and turn clockwise. Release the lock latch and remove the key.

(6) Insert the assembled lock in the console cover hole (Fig. 8) and install the retainer with the attaching screw.

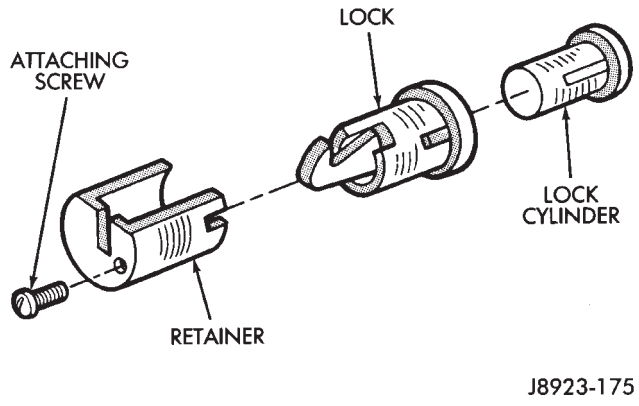

Fig. 8 Console Cover Lock Removal/Installation

CARPET—YJ

PASSENGER COMPARTMENT FRONT CARPET SECTION

The passenger compartment front carpet section (Fig. 1) is retained in place by the:

- Transmission/transfer case shift lever boots (Fig. 2).
- Passenger compartment rear carpet section.
- Velcro strips.

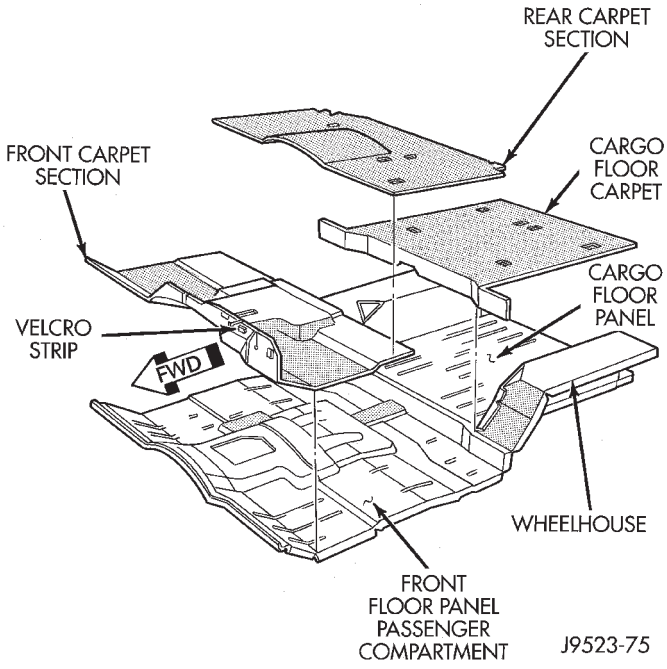

Fig. 1 Floor Carpets

To remove and install a front carpet section (Fig. 1), it is necessary to remove and then install the shift lever boots (Fig. 2).

Refer to the applicable component removal/installation procedures in this group.

When replacing a front carpet, position and cut openings in carpet with a razor knife for shift levers and boots (Fig. 2).

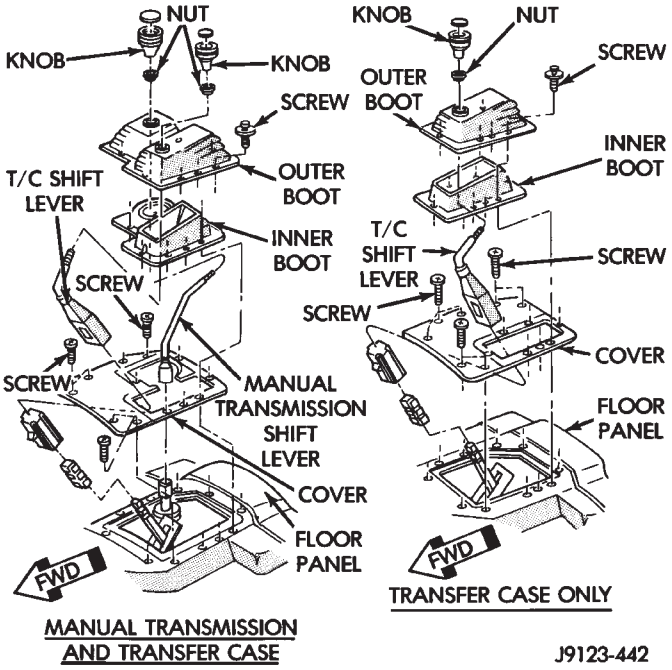

Fig. 2 Shift Lever Boots

PASSENGER COMPARTMENT REAR CARPET SECTION

The rear floor carpet section in the passenger compartment (Fig. 1) is retained in place by the:

- Front seats.
- Floor console.
- Shoulder belt buckle anchors.
- Door sill carpets.

To remove and then install the rear carpet section (Fig. 1), it is necessary to remove and then install the front seats and the floor console.

Refer to the applicable component removal/installation procedures in this group.

CARGO FLOOR CARPET

The cargo floor carpet (Fig. 1) is retained in place by the:

- Rear seat.
- Shoulder belt buckle anchors.
- Wheelhouse carpets.

To remove and then install a cargo floor carpet, it is necessary to remove and then install the rear seat.

Refer to the applicable component removal/installation procedures in this group.

WHEELHOUSE, DOOR SILL AND TAILGATE CARPETS

The wheelhouse, door sill and tailgate carpets (Fig. 3) are retained in place with:

- Adhesive.
- Velcro strips.
- Screws.

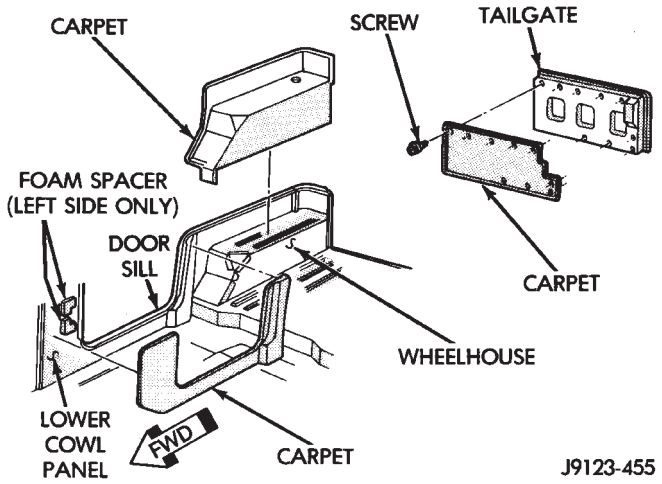

Fig. 3 Wheelhouse, Door Sill and Tailgate Carpets

A replacement carpet for any of the three may require some modifications to accommodate the attached components.

ADD-A-TRUNK—YJ

REMOVAL

(1) Remove the nylon thumb screws (Fig. 4).
(2) Remove the trunk.

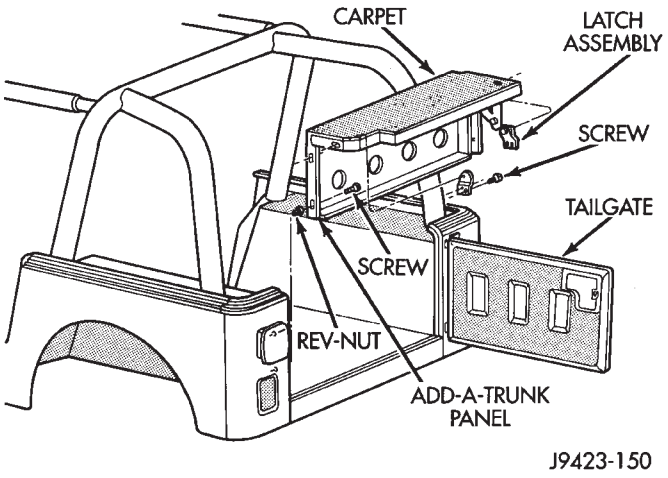

Fig. 4 Add-A-Trunk Assembly

INSTALLATION

(1) Position the trunk in the cargo space and insert the nylon thumbscrews with washers through the predrilled holes and into the well nuts.
(2) Tighten the thumb screws.

PAINT

INTRODUCTION

Exterior vehicle body colors are identified on the Vehicle Code plate. The plate is located on the left side of the dash panel in the engine compartment. The color code location is described in the Introduction of this manual. The color names provided in the Paint and Trim Code Description chart are the color names used on most repair product containers. The color names in the new vehicle ordering guides may vary depending on vehicle line but use the same color code.

BASE COAT/CLEAR COAT FINISH

On most vehicles a two part paint application (base coat/clear coat) is used. Color paint that is applied to primer is called base coat. The clear coat protects the base coat from ultra violet light and provides a durable high gloss finish.

WET SANDING,BUFFING AND POLISHING

Minor acid etching, orange peel or smudging in clear coat can be reduced with light wet sanding, hand buffing and polishing. If the finish has been wet sanded in the past, it can not be repeated. Wet sanding operation should be performed by a trained automotive painter.

CAUTION: Do not remove clear coat finish, if equipped. Base coat paint must retain clear coat to shine.

PAINTED SURFACE TOUCH-UP

When a painted metal surface has been scratched or chipped, it should be touched-up as soon as possible to avoid corrosion. For best results, use Mopar Scratch Filler/Primer, Touch-Up Paints and Clear Top Coat. Refer to Introduction group of this manual for Body Code Plate information.

TOUCH-UP PROCEDURE

(1) Scrape loose paint and corrosion from inside scratch or chip.

(2) Clean affected area with Mopar Tar/Road Oil Remover and allow to dry.

(3) Fill the inside of the scratch or chip with a coat of filler/primer. Do not overlap primer onto good surface finish. The applicator brush should be wet enough to puddle fill the defect without running. Do not stroke brush applicator on body surface. Allow the filler/ primer to dry hard.

(4) Cover the filler/primer with color touch-up paint. Do not overlap touch-up color onto the original color coat around the scratch or chip. Butt the new color to the original color if possible. Do not stroke applicator brush on body surface. Allow touch-up paint to dry hard.

(5) On vehicles without clear coat, the touch-up color can be lightly (600 grit) wet sanded and polished with rubbing compound.

(6) On vehicles with clear coat, Apply clear top coat to touch-up paint with the same technique as described in step 4. Allow clear top coat to dry hard. If desired, step 5 can be performed on clear top coat.

AFTERMARKET PAINT AND TRIM REPAIR PRODUCTS—XJ

EXTERIOR COLOR NAME	CHRY.[1] CODE	PPG	BASF	DuPONT	S-W ACME M-S	AKZO/ SIKKENS
Flame Red C.C.	PR4	4679	23043	B9326	46916	CHA93:PR4
Lt. Pearlstone P.C.	HV1	4189	22125	B8952	41824	CHA89:HV1
Aqua P.C.	LQE	4446	22115	B9233	45859	CHA92:LQE
Emerald Green P.C.	PGF	4639	23042	B9328	46976	CHA92:PGF
Moss Green P.C.	RJN	47383	25036	B9533	50277	CHA95:RJN
Brilliant Blue P.C.	PCH	4784	24073	B9452	48538	CHA94:PCH
Black C.C.	DX8	9700	15214	F0204	34858	CHA85:DX8
Dk. Silver Met. C.C.	KS7	4272	21077	B9137	44046	CHA91:KS7
Bright White C.C.	GW7	4037	18238	B8833	37298	CHA88:GW7

CLADDING COLOR NAME	CHRY. CODE	PPG	BASF	DuPONT	S-W ACME M-S	AKZO/ SIKKENS
Bright White C.C.	GW7	4037	18238	B8833	37298	CHA88:GW7
Lt. Pearlstone P.C.	HV1	4189	22125	B8952	41824	CHA89:HV1
Moss Green P.C.	RJN	47383	25036	B9533	50277	CHA95:RJN
Black C.C.	DX8	9700	15214	F0204	34858	CHA85:DX8
Dk. Silver Met. C.C.	KS7	4272	21077	B9137	44046	CHA91:KS7

INTERIOR COLOR NAME	CHRY. CODE	PPG	BASF	DuPONT	S-W ACME M-S
Charcoal (HS1/HA8)	SA	34427/ 2-1312 34466/ 2-1323	18825 18826	C8823 C8824	38500/ 38501
Dk. Sand	Y6	26375/ 2-1358	19139	C8914	40079

[1] Herberts Standox and Spies Hecker use the Chrysler paint code as listed on the Vehicle Code Plate.

J9523-52

AFTERMARKET PAINT AND TRIM REPAIR PRODUCTS—YJ

EXTERIOR COLOR NAME	CHRY.[1] CODE	PPG	BASF	DuPONT	S-W ACME M-S	AKZO/ SIKKENS
Flame Red C.C.	PR4	4679	23043	B9326	46916	CHA93:PR4
Lt. Pearlstone P.C.	HV1	4189	22125	B8952	41824	CHA89:HV1
Aqua P.C.	LQE	4446	22115	B9233	45859	CHA92:LQE
Emerald Green P.C.	PGF	4639	23042	B9328	46976	CHA92:PGF
Moss Green P.C.	RJN	47383	25036	B9533	50277	CHA94:RJN
Brilliant Blue P.C.	PCH	4784	24073	B9452	48538	CHA94:PCH
Black C.C.	DX8	9700	15214	F0204	34858 M-S 90-5950	CHA85:DX8
Dk. Silver Met. C.C.	KS7	4272	21077	B9137	44046	CHA91:KS7
Bright Mango C.C.	RV5	4964	25051	B9550	50505	CHA95:RV5
Bright White C.C.	GW7	4037	18238	B8833	37298	CHA88:GW7

INTERIOR COLOR NAME	CHRY. CODE	PPG	BASF	DuPONT	S-W ACME M-S
Cinder/Lt. Charcoal (HXA/HS1)	XS	35215/2-1445 34427/2-1312	18825 21009	C9127 C8823	44567 38500
Spice Moss/Green (LTB/RJ4)	TJ	2740/2-1466 47508/2-1583	22142	C9253	45996/ 50512
Spice	TB	27240/2-1466	22142	C9253	45996

YJ TOP COLOR NAME	CHRY. CODE	PPG	BASF	DuPONT	S-W ACME M-S	AKZO/ SIKKENS
Black	HCX	9857	20200	C8833	42860	CHA90:HCX
Spice	LTB	27315	22155	C9253	46487	CHA90:LTB
Frost White	KWC	91068	21097	C9114	44958	CHA90:KWC

[1] Herberts Standox and Spies Hecker use the Chrysler paint code as listed on the Vehicle Code Plate.

J9523-53

TORQUE SPECIFICATIONS—XJ VEHICLES

Component	Service Set-To Torque	Service Recheck Torque
Hood Hinge-to-Hood Screws	31 N•m (23 ft-lbs)	24-37 N•m (18-27 ft-lbs)
Hood Hinge-to-Cowl Nuts	31 N•m (23 ft-lbs)	24-37 N•m (18-27 ft-lbs)
Hood Lock Assembly Attaching Screws	16 N•m (138 in-lbs)	14-27 N•m (125-235 in-lbs)
Hood Lock Striker-to-Hood Screws	16 N•m (138 in-lbs)	14-27 N•m (125-235 in-lbs)
Inside Hood Release Handle-to-Instrument Panel	8 N•m (78 in-lbs)	7-11 N•m (65-95 in-lbs)
Door Hinge Screws	35 N•m (26 ft-lbs)	30-40 N•m (22-30 ft-lbs)
Door Latch Screw	9 N•m (7 ft-lbs)	7-11 N•m (5-9 ft-lbs)
Exterior Door Handle Nut	5 N•m (4 ft-lbs)	4-6 N•m (3-5 ft-lbs)
Vent Window-to-Door Screw	1 N•m (1 ft-lb)	0.7-21 N•m (.5-1.5 ft-lb)
Door Check-to-A-pillar Screw	9 N•m (7 ft-lbs)	7-11 N•m (5-9 ft-lbs)
Door Check-to-Front Door Screw	10 N•m (7 ft-lbs)	10-11 N•m (7.4-8.1 ft-lbs)
Glass Channel Bottom Screw	9 N•m (7 ft-lbs)	7-11 N•m (5-8 ft-lbs)
Vent Window Upper Screws	1.2 N•m (1 ft-lb)	0.7-1 N•m (.5-1.5 ft-lbs)
Door Glass Stud Nut	6 N•m (4 ft-lbs)	5-7 N•m (4-6 ft-lbs)
Glass Panel Bottom Screw	9 N•m (7 ft-lbs)	7-11 N•m (5-8 ft-lbs)
Vent Window Upper Screws	1.2 N•m (1 ft-lb)	0.7-2 N•m (.5-1.5 ft-lbs)
Door Latch Screws	9 N•m (7 ft-lbs)	7-11 N•m (5-9 ft-lbs)
Exterior Door Handle Nut	5 N•m (4 ft-lbs)	4-6 N•m (3-5 ft-lbs)
Liftgate Hinge Screw	9 N•m (7 ft-lbs)	5-7 N•m (4-5 ft-lbs)
Liftgate Hinge Nut	9 N•m (7 ft-lbs)	5-7 N•m (4-5 ft-lbs)
Support Ball Stud	7 N•m (5 ft-lbs)	4-7 N•m (3-5 ft-lbs)
Liftgate Latch Screw	9 N•m (7 ft-lbs)	5-7 N•m (4-5 ft-lbs)
Striker Screw	30 N•m (22 ft-lbs)	18-26 N•m (13-18 ft-lbs)

J8923-262

TORQUE SPECIFICATIONS—ACCESSORIES

COMPONENT	SERVICE SET-TO TORQUE	SERVICE RECHECK TORQUE
Towing tube-to-reinforcement bolt	50 N•m (37 ft-lbs)	40-60 N•m (30-44 ft-lbs)
T-bolt nut (M12 x 1.75)	85 N•m (63 ft-lbs)	75-95 N•m (56-70 ft-lbs)
Draw bar-to-towing tube bolt/nut (M12 x 1.75)	85 N•m (63 ft-lbs)	75-95 N•m (56-70 ft-lbs)
Rear crossmember-to-plate bracket bolt	52 N•m (40 ft-lbs)	42-62 N•m (34-46 ft-lbs)
Hitch ball-to-draw bar nut	217 N•m (160 ft-lbs)	—
Draw bar-to-draw bar bumper bracket bolt (M12 X 1.75)	85 N•m (63 ft-lbs)	75-95 N•m (56-70 ft-lbs)
Rear bumper-to-rear bumper reinforcement plate torx head bolt	20 N•m (15 ft-lbs)	15-25 N•m (11-18 ft-lbs)
Draw bar support bracket bolt (M12 x 1.75)	85 N•m (63 ft-lbs)	75-95 N•m (56-70 ft-lbs)
Trailer Hitch Bolts (Model 15)		
1/2 inch	102 N•m (75 ft-lbs)	—
5/8 inch	203 N•m (150 ft-lbs)	—
Luggage Rack Support Screws	3 N•m (28 in-lbs)	2-5 N•m (15-40 in-lbs)

J8901-29

HEATING AND AIR CONDITIONING

CONTENTS

page

COMPONENT SERVICE—XJ VEHICLES 23
COMPONENT SERVICE—YJ VEHICLES 32
COMPRESSOR SERVICE 19
GENERAL INFORMATION 1
HEATING AND AIR CONDITIONING TEST PROCEDURES 15
REFRIGERANT SERVICE AND PERFORMANCE TEST 11
TORQUE SPECIFICATIONS 37
WARNINGS, CAUTIONS AND SERVICE PRECAUTIONS 9

GENERAL INFORMATION

INDEX

page

A/C Components 4
Heater and A/C Operation 1
Manifold Gauge Set 7
Refrigerant 7
Refrigerant Equipment 7

HEATER AND A/C OPERATION

HEATER—XJ

A blend-air heating system is used in XJ vehicles. The temperature of heated air is controlled by regulating the quantity of air flow through the heater core. This is accomplished by blending outside air with heated air from the heater core to obtain the desired discharge temperature. A temperature control lever on the heater control determines air flow through the heater core. The lever uses a cable to operate the blend-air door. This door controls air flow through the core. Vacuum motors are used to actuate and position the remaining door in the system.

On left hand drive (LHD) XJ vehicles a water valve controls coolant flow to the heater core. The valve is vacuum operated. When vacuum is applied, the valve opens and coolant is directed through the heater core and back to the engine. When the water valve is closed (no vacuum applied) coolant flow bypasses the heater core back to the engine.

HEATING SCHEMATIC—XJ

HEATER CONTROL UNIT

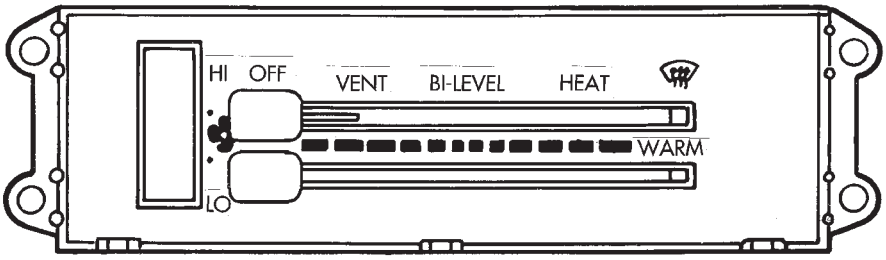

HEATER SYSTEM OPERATION

Mode Lever Position	Air Discharge	Blower Speeds	Panel Door	Floor Door	Defrost Door	Water Valve
Off	Closed	None	Closed	Closed	Closed	Closed
Vent	Panel Registers	4	Open	Closed	Closed	Closed
Bi-Level	Panel Registers and Floor	4	Open	Open	Closed	Open (1)
Heat	Floor With Def. Bleed	4	Closed	Open	Bleed	Open (1)
	Defroster	4	Closed	Closed	Open	Open (1)

(1) WATER VALVE CLOSES IN FULL "COOL" TEMPERATURE LEVER POSITION.

HEATER CONTROL SYSTEM VACUUM SCHEMATIC

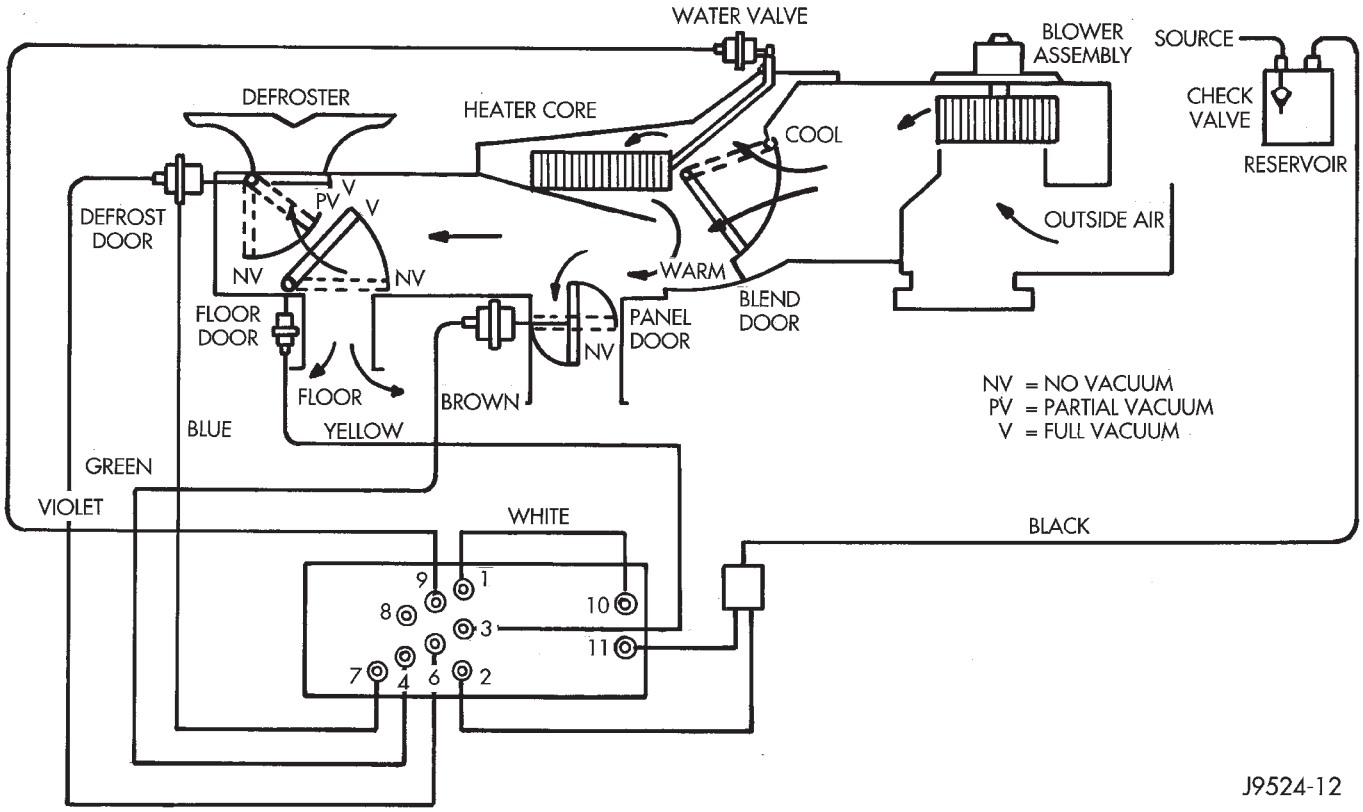

HEATER—YJ

A blend-air heating system is used in YJ vehicles. The blend-air system provides a constant flow of engine coolant through the heater core.

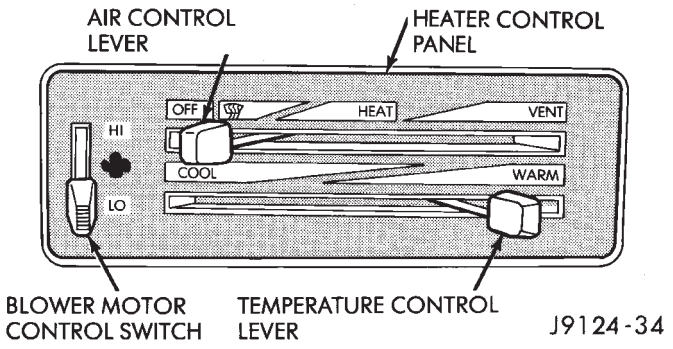

Fig. 1 Heater Control Panel

The air control lever (Fig. 1) operates a door in the fresh air intake duct. The door controls the amount of fresh air flow into the heater housing and core. When the lever is in the OFF position, the intake door is closed preventing air flow into the housing.

The temperature control lever (Fig. 1) determines air flow through the heater core. The lever operates the heater housing blend-air door which controls air flow through the core.

The blower motor is operated by the control switch (Fig. 1). The switch provides 3 blower speeds for increased air flow in heat or defrost mode.

DEFROSTING

The heater housing has a defroster door to divert heated air to the defroster duct and outlets (Fig. 2). Defrost air flow is controlled by the air control lever.

For defroster operation, the air control lever must be moved to the defrost detent. The detent is identified by the defrost symbol on the control panel. In this position, the defroster door diverts the heated air from the core to the defroster duct outlets.

If air control lever is moved to any position between heat and defrost, the defroster door does not close completely. In this mode, the door remains partially open causing heated air to be divided equally between the heat and defrost outlets.

FRESH AIR VENTILATION

The fresh air ventilating system (Fig. 3) is operated by the air control lever. When the lever is moved to VENT position, outside air from the cowl intake flows into the heater housing. Incoming air is directed into the vehicle interior through vent doors in the housing.

A door in the intake duct controls air flow into the duct. The door is operated by a vacuum motor. The

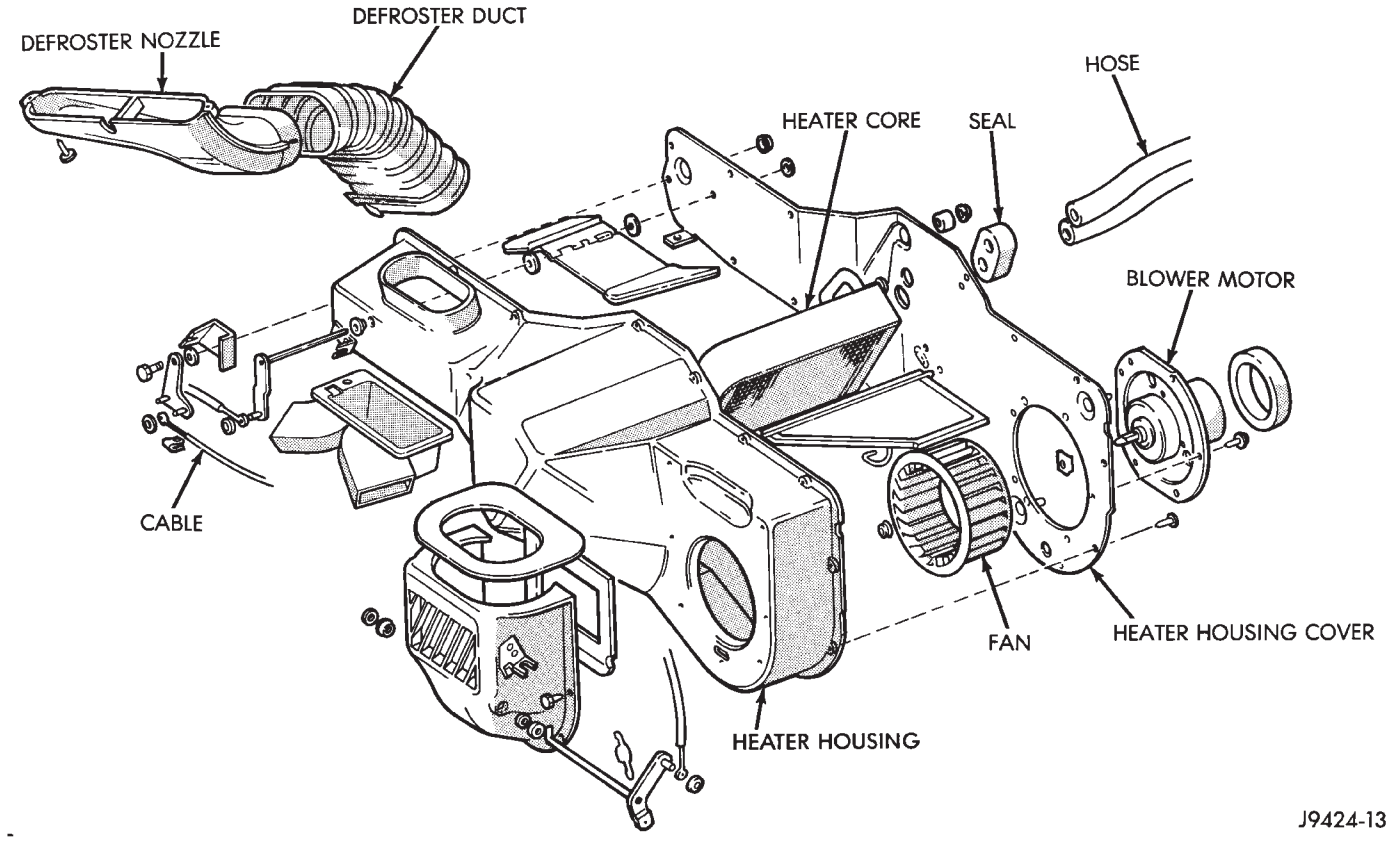

Fig. 2 Heating System Components

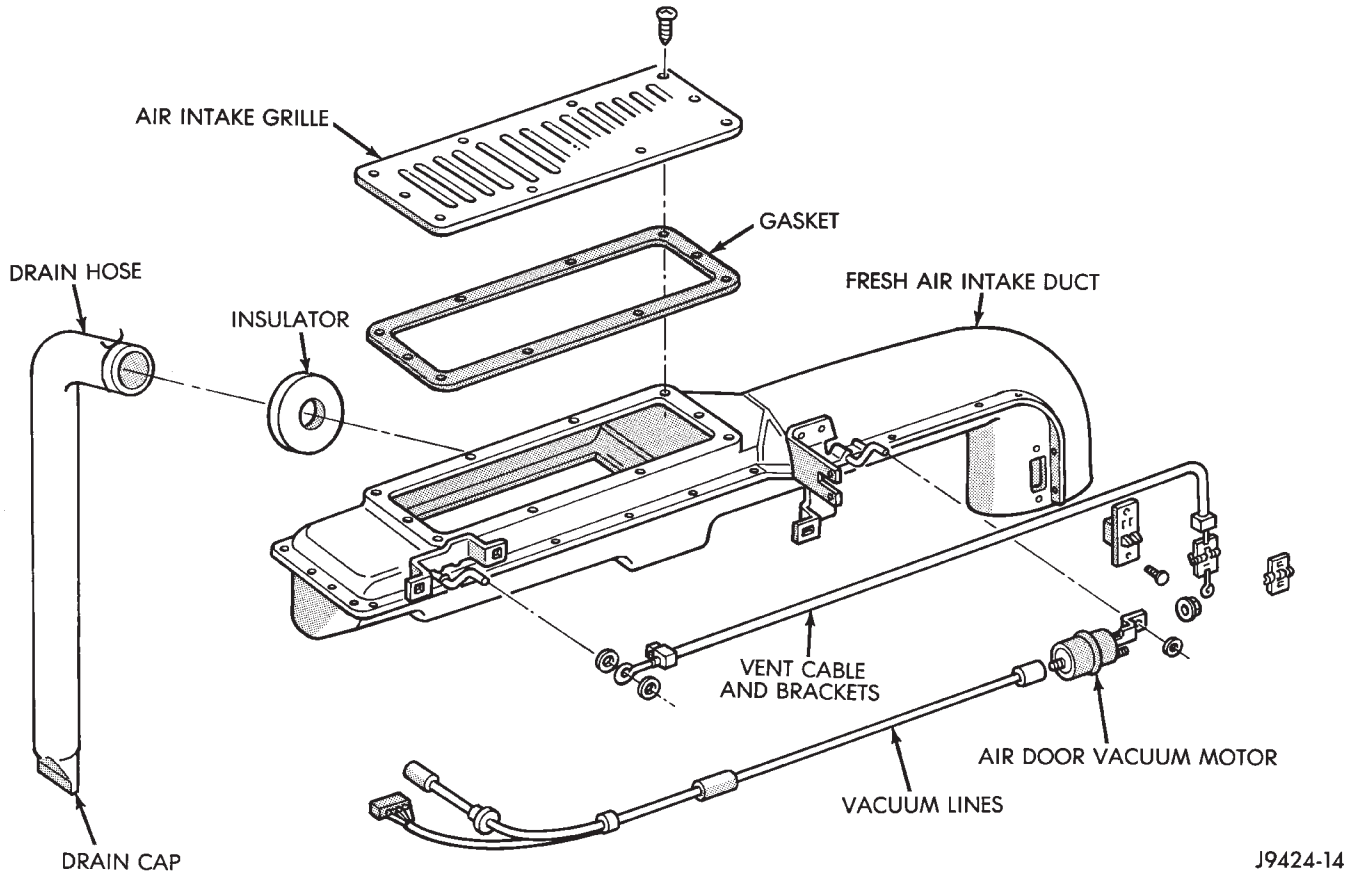

Fig. 3 Fresh Air Intake System Components

motor is controlled by a vacuum switch in the heater control panel. The vent air doors are opened and closed by a cable and linkage operated by the air control lever. Fresh air intake occurs only when the lever is in the VENT position.

AIR CONDITIONING

The compressor increases the pressure and temperature of the refrigerant. The heated refrigerant vapor is pumped into the condenser where it is cooled by air passing over the condenser fins. As the refrigerant cools in the condenser, it condenses into a liquid. Still under high pressure, the liquid refrigerant passes into the receiver. The receiver acts as a reservoir to furnish refrigerant to the expansion valve at all times. From the receiver, the high pressure liquid refrigerant passes to the expansion valve. The expansion valve meters refrigerant into the evaporator. The low pressure is maintained by the suction side of the compressor. As it enters the evaporator, the refrigerant begins to absorb heat from the air passing over the evaporator core. Having given up its heat to boil the refrigerant, the air is cooled and passes into the passenger compartment. From the evaporator the vaporized refrigerant is drawn back to the compressor to repeat the cycle.

A/C COMPONENTS

COMPRESSOR: The SD7H15 Compressor is used on all models. The purpose of the compressor is to compress the low-pressure refrigerant vapor into a high pressure, high temperature vapor. The compressor is serviced as a assembly only.

CLUTCH PULLEY AND COIL: They are mounted on the compressor and providing a way to drive the compressor. The compressor clutch and coil are the only serviced parts on the SD7H15 compressor. When the compressor is not in operation, the pulley free wheels on the clutch hub bearing. When the coil is energized the clutch plate is magnetically engaged with the pulley and turns the compressor shaft.

CONDENSER: The condenser is located in front of the engine radiator. Its function is to cool the hot high pressure refrigerant gas. This causes it to condense into high pressure liquid refrigerant.

EXPANSION VALVE: The expansion valve is located in the engine compartment on XJ vehicles. On YJ vehicles it is located behind the A/C housing. Its function is to meter refrigerant into the evaporator in accordance with cooling requirements.

AIR CONDITIONING SCHEMATIC—XJ

A/C CONTROL UNIT

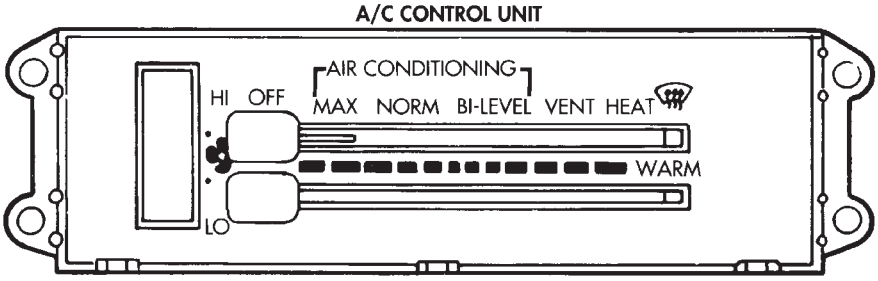

A/C SYSTEM OPERATION

Mode Lever Position	Air Discharge	Blower Speeds	Recirc. Door	Panel Door	Floor Door	Defrost Door	A/C Cmp.	Water Valve
Off	Closed	None	Recirc.	Open	Indeter-minate	Open	Off	Closed
Max A/C	Panel Registers With Floor Bleed	4	Recirc.	Open	Bleed	Closed	On	Open (1)
Norm A/C	Panel Registers With Floor Bleed	4	Outside	Open	Bleed	Closed	On	Open (1)
Bi-Level	Panel Registers and Floor	4	Outside	Open	Open	Closed	On	Open (1)
Vent	Panel Registers With Floor Bleed	4	Outside	Open	Bleed	Closed	Off	Open (1)
Heat	Floor With Def. Bleed	4	Outside	Closed	Open	Bleed	Off	Open (1)
	Def. With Floor Bleed	4	Outside	Closed	Bleed	Open	On	Open (1)

(1) WATER VALVE CLOSES IN FULL "COOL" TEMPERATURE LEVER POSITION.

AIR CONDITIONING CONTROL SYSTEM VACUUM SCHEMATIC

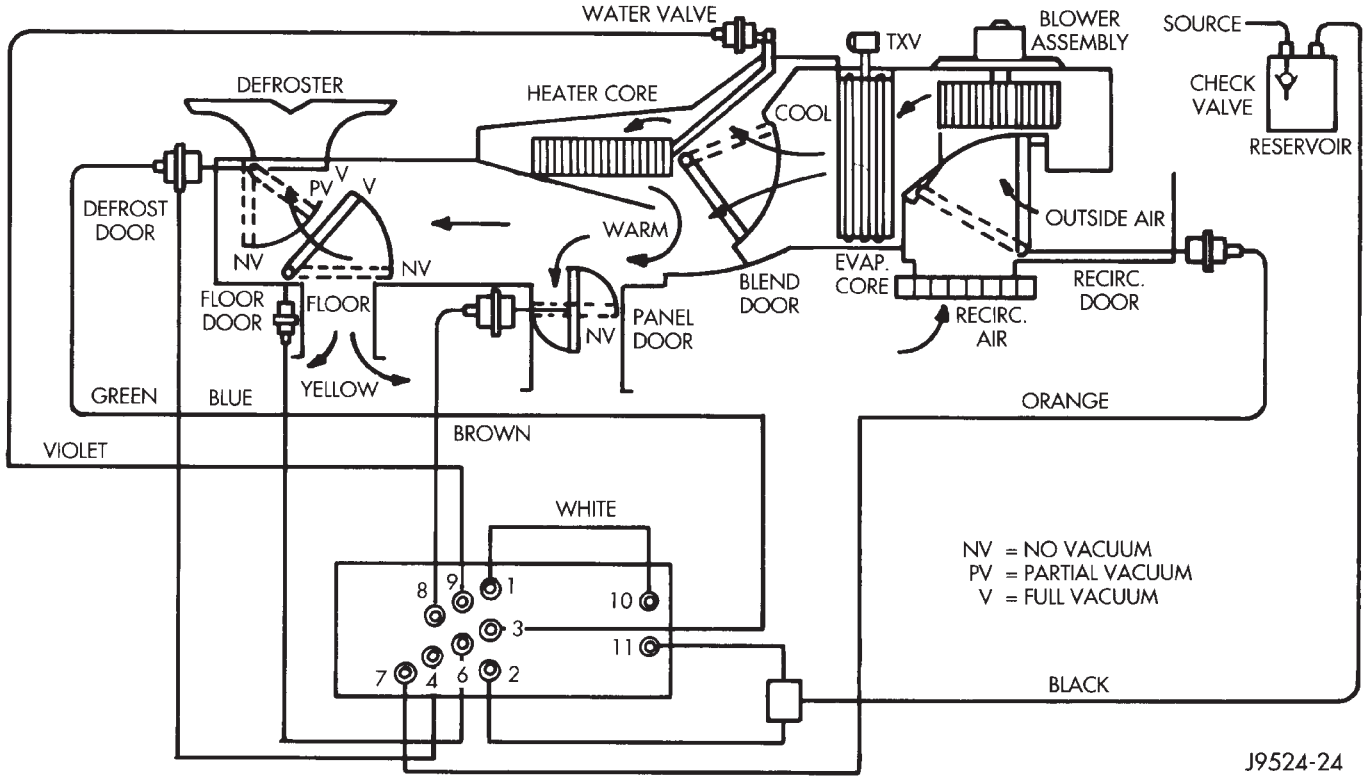

EVAPORATIVE HOUSING COMPONENTS—YJ

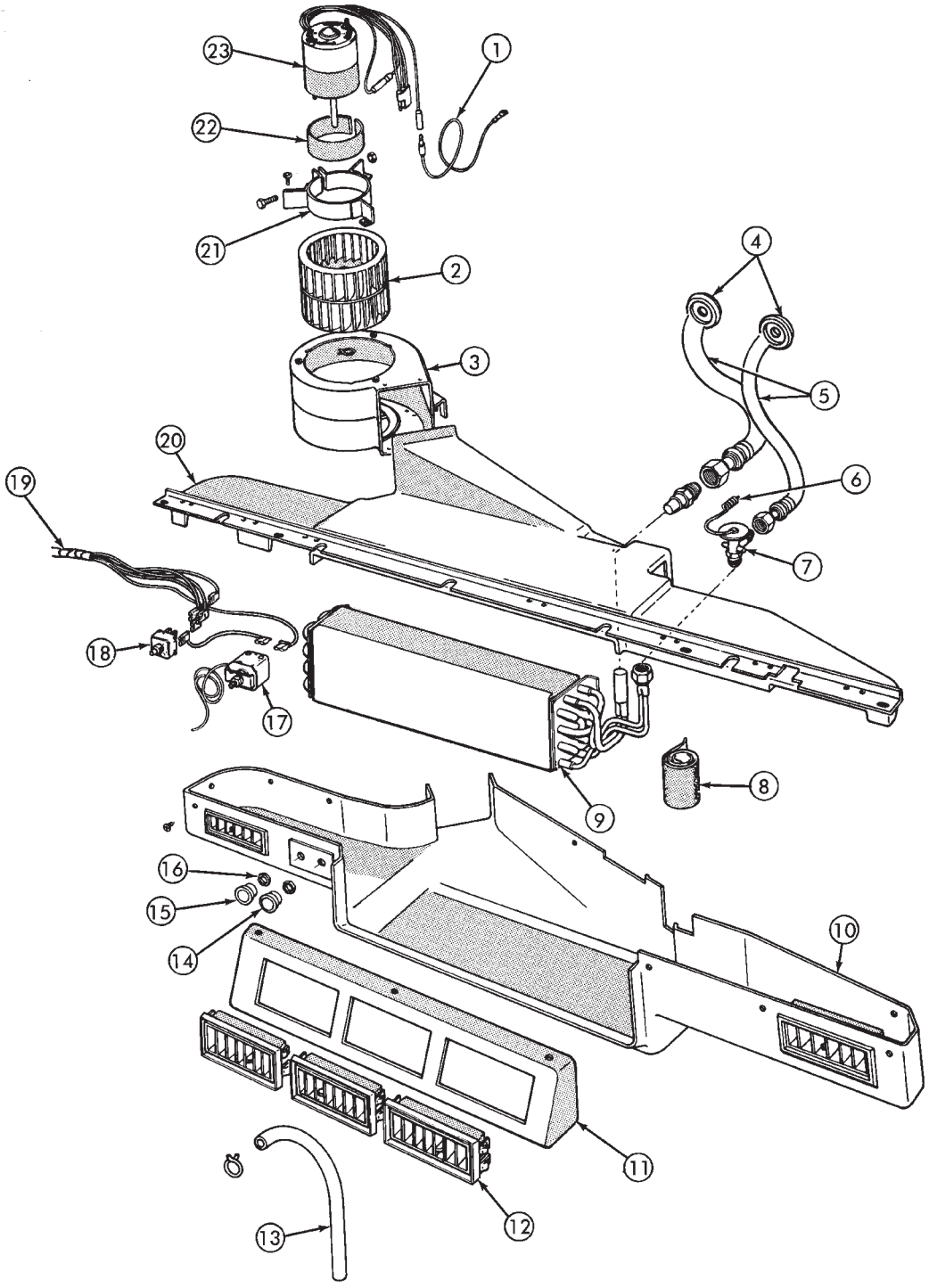

1. FEED WIRE
2. BLOWER FAN
3. BLOWER HOUSING
4. GROMMET
5. HOSE
6. CAPILLARY TUBE
7. EXPANSION VALVE
8. INSULATION
9. EVAPORATOR CORE
10. LOWER HOUSING
11. LOUVER PANEL
12. LOUVER
13. DRAIN TUBE
14. TEMPERATURE CONTROL KNOB
15. FAN CONTROL KNOB
16. NUT
17. THERMOSTAT
18. FAN CONTROL SWITCH
19. SWITCH HARNESS
20. UPPER HOUSING
21. BRACKET
22. INSULATION
23. BLOWER MOTOR

J9124-12

EVAPORATOR COIL: The coil is located in the A/C housing. Its function is to remove heat and dehumidify the air before it enters the vehicle.

FIN SENSING CYCLING CLUTCH SWITCH: The switch is attached to the evaporator coil with the temperature sensing probe inserted into the coil fins. This switch controls evaporator temperature and prevents condensate water on the evaporator coil from freezing. It does this by sending signals to the Powertrain Control Module (PCM) to cycling the compressor clutch on and off. This switch is used on **XJ** only.

FILTER-DRIER: The drier is used to remove any traces of moisture from the refrigerant system. A sight glass is located on top of the filter drier. It is used as a diagnostic tool to observe refrigerant flow.

HIGH PRESSURE RELIEF VALVE: The valve is located on the filter drier. The valve is used to prevent excessive high pressure build of 3445 to 4135 kPa (500 to 600 psi) and above. This prevents damage to the compressor and other system components.

LOW-PRESSURE HIGH-PRESSURE CUT-OFF SWITCH: The switch is located on the filter drier and is wired in series with compressor clutch. When the pressure drops down to 193 kPa (28 psi) the switch interrupts the power to the compressor clutch. When the pressure increases above 3100 to 3375 kPa (450 to 490 psi) the switch interrupts the power to the compressor clutch.

THERMOSTAT: The thermostat is located in the evaporator housing. The thermostat temperature sensing probe is inserted into the evaporator coil. Its function is to cycles the compressor clutch on and off. This switch controls temperature and prevents condensate water on the evaporator coil from freezing. The thermostat is used on the **YJ** only.

REFRIGERANT LINES: The lines are used to carry the refrigerant between the various system components.

SERVICE PORTS: The high pressure service port is located on the discharge line near the compressor. The low pressure service port is located on the suction line near the compressor. These ports are used to attach A/C gauges. After servicing the refrigerant system, always install service port caps.

REFRIGERANT

XJ and YJ vehicles use a new type of refrigerant called R-134a. It is a non-toxic, non-flammable, clear color-less liquified gas.

R-134a refrigerant is not compatible with R-12 refrigerant. A small amount of R-12 in a R-134a system will cause compressor failure, oil sludge or poor air conditioning performance.

R-134a refrigerant requires a special type of compressor oil (SP20 PAG). When adding oil, make sure that it is designed to be used in a R-134a system and the SD7H15 compressor.

Service ports have been designed to ensure that the system is not accidentally filled with R-12 refrigerant.

REFRIGERANT EQUIPMENT

WARNING: EYE PROTECTION MUST BE USED WHEN SERVICING AN AIR CONDITIONING REFRIGERANT SYSTEM. TURN OFF (ROTATE CLOCKWISE) ALL VALVES ON THE EQUIPMENT BEING USED BEFORE PROCEEDING WITH THIS OPERATION. PERSONNEL INJURY CAN RESULT.

Chrysler Corporation recommends a (R-134a) recycling device that meets SAE standard J2210 be used when servicing the refrigerant system. Contact an automotive service equipment supplier for refrigerant recycling equipment that is available in your area. Refer to the operating instructions provided with the recycling equipment for proper operation.

MANIFOLD GAUGE SET

CAUTION: DO NOT use an R-12 manifold gauge set on an R-134a system. The refrigerants are not compatible and system damage will result.

A manifold gauge set (Fig. 1) may be needed in conjunction with the charging and or recovery/recycling device. The service hoses on the gauge set being used should have manual (turn wheel) or automatic back flow valves at the service port connector ends. This will prevent refrigerant from being release into the atmosphere.

LOW PRESSURE GAUGE HOSE

The low pressure hose (BLUE with BLACK STRIP) should be attached to the charging/service port. This port is located at the right front of the engine compartment in the condenser-to-evaporator line.

HIGH PRESSURE GAUGE HOSE

The high pressure hose (RED with BLACK STRIP) should be attached to the discharge/service port. This port is located on the compressor plumbing or manifold.

RECOVERY/RECYCLING/EVACUATION/ CHARGING HOSE

The center manifold hose (YELLOW or WHITE with BLACK STRIP) is used to recover, evacuate and charge the refrigerant system. When the low or high pressure valves on the manifold gauge set are opened, the refrigerant in the system will escape through this hose.

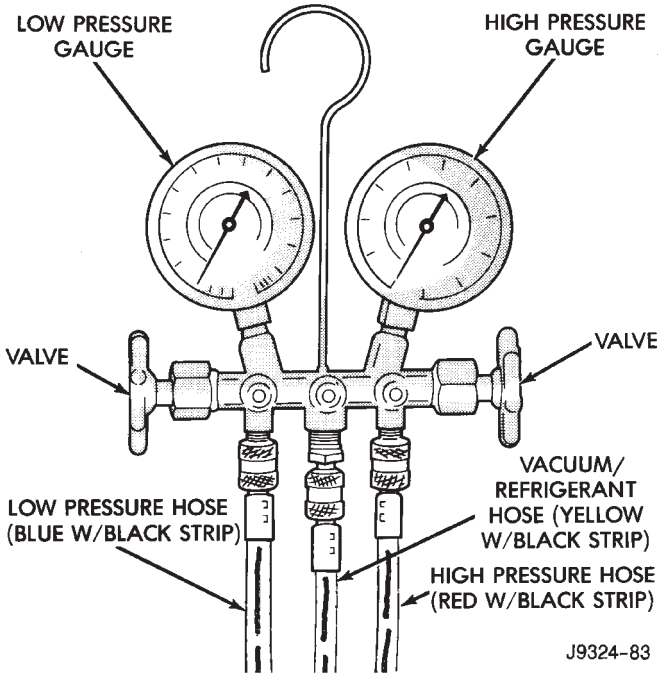

Fig. 1 Manifold Gauge Set

Refer to the Recovery/Recycling device operators manual for proper procedures.

WARNINGS, CAUTIONS AND SERVICE PRECAUTIONS

WARNINGS

WARNING: THE AIR CONDITIONING SYSTEM CONTAINS REFRIGERANT UNDER HIGH PRESSURE. SEVERE PERSONAL INJURY MAY RESULT FROM IMPROPER SERVICE PROCEDURES. REPAIRS SHOULD ONLY BE PERFORMED BY QUALIFIED SERVICE PERSONNEL.

WARNING: AVOID BREATHING A/C REFRIGERANT AND LUBRICANT VAPOR OR MIST. EXPOSURE MAY IRRITATE EYES, NOSE AND/OR THROAT. WEAR EYE PROTECTION WHEN SERVICING THE AIR CONDITIONING REFRIGERANT SYSTEM. SERIOUS EYE INJURY CAN RESULT FROM EYE CONTACT WITH REFRIGERANT. IF EYE CONTACT IS MADE, SEEK MEDICAL ATTENTION IMMEDIATELY.

WARNING: DO NOT EXPOSE REFRIGERANT TO OPEN FLAME. POISONOUS GAS IS CREATED WHEN REFRIGERANT IS BURNED. AN ELECTRONIC TYPE LEAK DETECTOR IS RECOMMENDED.

WARNING: IF ACCIDENTAL SYSTEM DISCHARGE OCCURS, VENTILATE THE WORK AREA BEFORE RESUMING SERVICE. LARGE AMOUNTS OF REFRIGERANT RELEASED IN A CLOSED WORK AREA WILL DISPLACE THE OXYGEN AND CAUSE SUFFOCATION.

WARNING: THE EVAPORATION RATE OF (R-134A) REFRIGERANT AT AVERAGE TEMPERATURE AND ALTITUDE IS EXTREMELY HIGH. AS A RESULT, ANYTHING THAT COMES IN CONTACT WITH THE REFRIGERANT WILL FREEZE. ALWAYS PROTECT SKIN OR DELICATE OBJECTS FROM DIRECT CONTACT WITH REFRIGERANT.

WARNING: R-134A SERVICE EQUIPMENT OR VEHICLE A/C SYSTEM SHOULD NOT BE PRESSURE TESTED OR LEAK TESTED WITH COMPRESSED AIR. SOME MIXTURES OF AIR AND R-134A HAVE BEEN SHOWN TO BE COMBUSTIBLE AT ELEVATED PRESSURES. THESE MIXTURES ARE POTENTIALLY DANGEROUS AND MAY RESULT IN FIRE OR EXPLOSION CAUSING INJURY OR PROPERTY DAMAGE.

CAUTIONS

CAUTION: Liquid refrigerant is corrosive to metal surfaces. Follow the operating instructions supplied with equipment being used.

CAUTION: DO NOT use R-12 equipment or parts on the R-134a system. Damage to the system will result.

CAUTION: Never add R-12 to a system designed to use R-134a. Damage to the system will result.

CAUTION: R-12 compressor oil can not be mixed with the R-134a compressor oil. They ARE NOT compatible.

CAUTION: Do not over charge refrigerant system. This will cause excessive compressor head pressure and can cause noise and system failure.

SERVICE PRECAUTIONS

Recover the refrigerant before opening any fitting or connection. Open fittings with caution even after the system has been discharged. Never open or loosen a connection before recovering the refrigerant.

The A/C system must always be evacuated before charging.

DO NOT open the refrigerant system or uncap a replacement component until you are ready to service the system. This will prevent contamination in the system.

Before disconnecting a component clean the outside of the fittings thoroughly to prevent contamination entering the system.

Immediately after disconnecting a component from the system, seal the open fittings with a cap or plug.

Before connecting an open fitting always install a new seal/gasket. Coat the fitting and seal with clean refrigerant oil before connecting.

When installing a refrigerant line avoid sharp bends. Position the lines away from the exhaust or any sharp edges which may chafe the line.

Tighten fittings only to the specified torque. The aluminum fittings used in the A/C system will not tolerate over tightening.

When disconnecting a fitting use a wrench on both halves of the fitting. This will prevent twisting of the refrigerant lines or tubes.

Refrigerant oil absorbs moisture from the atmosphere if left uncapped. DO NOT open a container of

oil until you are ready to use it. Install the cap immediately after using. Store the oil only in a clean moisture-free container.

Keep service tools and the work area clean. Contamination of A/C system through careless work habits must be avoided.

COOLING SYSTEM

To maintain the performance level of the heating/air conditioning system, the engine cooling system must be properly maintained.

The use of a bug screen is not recommended. Any obstructions in front of the radiator or condenser can reduce the performance of the A/C and cooling system. If a bug screen is used it must be cleaned frequently.

COOLANT PRECAUTIONS

WARNING: ANTIFREEZE IS AN ETHYLENE GLYCOL BASE COOLANT AND IS HARMFUL IF SWALLOWED OR INHALED. IF SWALLOWED, DRINK TWO GLASSES OF WATER AND INDUCE VOMITING. IF INHALED, MOVE TO FRESH AIR AREA. SEEK MEDICAL ATTENTION IMMEDIATELY.

WARNING: WASH SKIN AND CLOTHING THOROUGHLY AFTER COMING IN CONTACT WITH ETHYLENE GLYCOL.

WARNING: KEEP OUT OF REACH OF CHILDREN AND PETS.

WARNING: DO NOT OPEN A COOLING SYSTEM WHEN THE ENGINE IS AT RUNNING TEMPERATURE. PERSONAL INJURY CAN RESULT.

WARNING: DO NOT STORE IN OPEN OR UNMARKED CONTAINERS.

WARNING: HOT ENGINE COOLANT CAN CAUSE SEVERE BURNS. DO NOT OPEN THE RADIATOR DRAIN COCK WHEN THE COOLING SYSTEM IS HOT AND PRESSURIZED. ALLOW THE COOLANT TO DECREASE TO ROOM TEMPERATURE BEFORE STARTING REPAIR OPERATIONS.

The engine cooling system is designed to develop internal pressure of 97 to 124 kPa (14 to 18 psi). Allow the vehicle 15 minutes to cool down (or until a safe temperature and pressure are attained) before opening the cooling system. Refer to Group 7, Cooling System.

REFRIGERANT HOSES/TUBES PRECAUTIONS

Kinks or sharp bends in the refrigerant tubing or hoses will reduce the capacity of the entire system. High pressures are produced in the system when it is operating. Extreme care must be exercised to make sure that all connections are pressure tight. Dirt and moisture can enter the system when it is opened for repair.

A good rule for the flexible hose lines is to keep the radius of all bends at least 10 times the diameter of the hose. Sharp bends will reduce the flow of refrigerant. The flexible hose lines should be routed so they are at least 80 mm (3 inches) from the exhaust manifold. It is a good practice to inspect all flexible hose lines at least once a year to make sure they are in good condition and properly routed.

REFRIGERANT SERVICE AND PERFORMANCE TEST

INDEX

	page
Air Conditioning Performance Tests	12
Charging Refrigerant System	11
Evacuating Refrigerant System	11
Leak Testing Refrigerant	11
Recovering Refrigerant System	11
Refrigerant Oil	12

LEAK TESTING REFRIGERANT

REVIEW WARNINGS AND CAUTIONS IN THIS GROUP BEFORE LEAK TESTING.

If A/C system is not cooling properly, determine if system is fully charged. Refer to Refrigerant System Diagnosis Chart. If the system is empty evacuate the A/C system and charge system with 0.283 kPa (0.6 lbs. or 10 oz.) R-134a refrigerant. Refer to Charging Refrigerant System for instructions. To detect a leak in the system, perform the following procedures.

(1) Position the vehicle in a wind free work area. This will aid in detecting small leaks.

(2) Bring A/C system up to operating temperature and pressure. This is done by allowing the engine to run with the A/C on for 5 to 7 minutes.

(3) Open hood 5 minutes prior to leak test. This will dissipate any accumulated refrigerant in the engine compartment.

(4) With the engine not running, use an R-134a Electronic Leak Detector and search for leaks. Move probe slowly along the bottom side of lines and fittings, because R-134a is heavier than air. Fittings, lines, or components that appear to be oily usually indicates a refrigerant leak.

(5) To inspect the evaporator core for leaks. Set the blower at low speed and the selector in PANEL and RECIRC mode check for leaks at CENTER panel outlets.

RECOVERING REFRIGERANT SYSTEM

REVIEW WARNINGS AND CAUTIONS IN GENERAL INFORMATION SECTION OF THIS GROUP BEFORE DISCHARGING SYSTEM.

R-134a refrigerant is a hydrofluorocarbon (HFC) that does not contain chlorine. R-134a refrigerant Recovery/Recycling Station that meets SAE standard J2210 must be used to recover the refrigerant. Refer to the operating instructions provided with the equipment for proper operation.

EVACUATING REFRIGERANT SYSTEM

REVIEW WARNINGS AND CAUTIONS IN GENERAL INFORMATION SECTION OF THIS GROUP BEFORE EVACUATING SYSTEM.

If the A/C system has been open to the atmosphere, it must be evacuated before the system can be charged. Moisture and air mixed with refrigerant will raise the compressor head pressure above acceptable operating levels. This will reduce the performance of the air conditioner and damage the compressor. Moisture will boil at near room temperature when exposed to vacuum. To evacuate the refrigerant system use following procedure:

(1) Connect a suitable charging station and manifold gauge set to the vehicle.

(2) Open the low and high side valves and start vacuum pump. When suction gauge reads 88 kPa (26 in. Hg) vacuum or greater, close all valves and turn off vacuum pump. If system fails to reach specified vacuum, the system has a leak that must be corrected. If system maintains the specified vacuum for 30 minutes, start the vacuum pump. Then open the suction and discharge valves and evacuate an additional 10 minutes.

(3) Close all valves. Turn off and disconnect the vacuum pump.

The system is now ready to be charged with refrigerant.

CHARGING REFRIGERANT SYSTEM

REVIEW WARNINGS AND CAUTIONS IN GENERAL INFORMATION SECTION OF THIS GROUP BEFORE CHARGING SYSTEM.

After the system has been tested for leaks and evacuated, a refrigerant charge can be injected into the system. Refer to refrigerant capacities for proper amount of refrigerant charge. Charge the system using a Recovery/Recycling/Charging Station approved for R-134a refrigerant. Refer to the instructions provided with the equipment for proper operation.

REFRIGERANT CHARGE CAPACITY

The R-134a system charge capacity is 0.9 kPa (32 oz.) for XJ and YJ vehicles.

REFRIGERANT OIL

It is important to have the correct amount of oil in the A/C system. This will ensure proper lubrication of the compressor. Too little oil will result in damage to the compressor. Too much oil will reduce the cooling capacity of the system.

The oil used in the SD7H15 compressor is a polyalkylene glycol synthetic oil SP-20 PAG, wax-free refrigerant oil. Only refrigerant oil of the same type should be used to service the system. Do not use any other oil. The oil container should be kept tightly capped until it is ready for use and then capped after use to prevent contamination. Refrigerant oil will quickly absorb any moisture it comes in contact with.

OIL LEVEL CHECK

It will not be necessary to check oil level in the compressor or to add oil unless there has been an oil loss. This may be due to a rupture or leak from a line, shaft seal, evaporator or condenser. Oil loss at a leak point will be evident by the presence of a wet, shiny surface around the leak.

When an A/C system is assembled at the factory, all components (except the compressor) are refrigerant oil free. After the system has been charged and operated, the oil in the compressor is dispersed through the system. The receiver-drier, evaporator, condenser and compressor will retain a significant amount of oil.

Refrigerant oil must be added when a receiver-drier, evaporator, condenser or compressor are replaced. When the compressor is replaced, the oil must be drained from the replaced compressor and measured. Drain all the oil from the new compressor. Add back into the new compressor the amount of oil that was drained out of the old compressor.

Add an additional 30 ml (1 fluid oz.) of compressor oil to the system when a receiver-drier, condenser or evaporator is replaced.

AIR CONDITIONING PERFORMANCE TESTS

Humidity has an important bearing on the temperature of the air delivered to the vehicle's interior. It is important to understand the effect humidity has on the performance of the system. When humidity is high, the evaporator has to perform a double duty. It must lower the air temperature and the temperature of the moisture carried in the air. Condensing the moisture in the air transfers a great deal of heat energy into the evaporator fins and tubing. This reduces the amount of heat the evaporator can absorb from the air. High humidity greatly reduces the evaporator's ability to lower the temperature of the air.

Evaporator capacity used to reduce the amount of moisture in the air is not wasted. Wringing some of the moisture out of the air entering the vehicle adds to the comfort of the passengers. However, an owner may expect too much from their air conditioning system on humid days. A performance test is the best way to determine whether or not the system is performing up to standard. This test also provides valuable clues to the possible cause of trouble.

Air temperature in test room must be 21°C (70°F) minimum for this test.

(1) Connect a Tachometer and manifold gauge set.

(2) Set A/C controls to Max A/C, temperature lever on full cool and blower on high.

(3) Start engine and adjust idle to 1,000 RPM with A/C clutch engaged.

(4) Engine should be warmed up with doors, windows and hood closed.

(5) Insert a thermometer in the left center A/C outlet. Operate the A/C and engine for 5 minutes. The A/C clutch may cycle depending on ambient temperatures.

(6) After 5 minutes note the discharge air temperature. If the clutch cycles, take the reading before the clutch disengages.

(7) On LHD XJ vehicles open the hood and disconnect vacuum line going to the heater water control valve. Observe the valve arm for movement as the line is disconnected. Plug the vacuum line to prevent leakage. If it does not move repair vacuum circuit.

(8) Operate the A/C for 2 more minutes and take the discharge air temperature reading again. On XJ vehicles if the temperature increased by more than 2°C (5°F) check the blend air door cable for correct operation.

(9) Compare the discharge air temperature to the A/C Performance (Temperature and Pressure) Chart. If the discharge air temperature is high, refer to Refrigerant Leak Testing and Refrigerant System Diagnosis Chart.

(10) Compare the compressor discharge and suction pressures to the A/C Performance (Temperature and Pressure) Chart. If the compressor discharge or suction pressure is not normal, check the operation of the refrigerant system. Refer to Refrigerant System Diagnosis Chart.

If pressures are abnormal, refer to the Pressure and Performance Diagnosis Charts.

The following chart have been developed for quick reference.

XJ PERFORMANCE TEMPERATURE AND PRESSURE CHART

Ambient Temperature	21°C (70°F)	27°C (80°F)	32°C (90°F)	38°C (100°F)	43°C (110°F)
Air Temperature At Center Panel Outlet	2- 7°C (36-44°F)	3- 8°C (38-46°F)	6- 12°C (42-53°F)	9- 16°C (48-60°F)	12- 20°C (54-68°F)
Evaporator Inlet Pressure At Charge Port	124 207 kPag	138 241 kPag	152 269 kPag	172 296 kPag	179 324 kPag
	18 30 psi	20 35 psi	22 39 psi	25 43 psi	26 47 psi
Compressor Discharge Pressure	1034 1516 kPag	1103 1620 kPag	1516 2136 kPag	1723 2205 kPag	1379 2344 kPag
	150 220 psi	160 235 psi	220 310 psi	250 320 psi	280 340 psi

J9424-48

YJ PERFORMANCE TEMPERATURE AND PRESSURE CHART

Ambient Temperature	21°C (70°F)	27°C (80°F)	32°C (90°F)	38°C (100°F)	43°C (110°F)
Air Temperature At Center Panel Outlet	3- 8°C (38-46°F)	4- 10°C (39-50°F)	7- 13°C (44-55°F)	10- 17°C (50-62°F)	13- 21°C (56-70°F)
Evaporator Inlet Pressure At Charge Port	124 207 kPag	138 241 kPag	152 269 kPag	172 296 kPag	179 324 kPag
	18 30 psi	20 35 psi	22 39 psi	25 43 psi	26 47 psi
Compressor Discharge Pressure	1034 1516 kPag	1103 1620 kPag	1516 2136 kPag	1723 2205 kPag	1379 2344 kPag
	150 220 psi	160 235 psi	220 310 psi	250 320 psi	280 340 psi

J9424-47

PRESSURE DIAGNOSIS

CONDITION	POSSIBLE CAUSES	CORRECTION
LOW SIDE AND HIGH SIDE PRESSURE LOW	1. System refrigerant low. 2. Expansion valve is restricted.	1. Evacuate, leak test and charge system. 2. Replace the expansion valve.
LOW SIDE PRESSURE HIGH AND HIGH SIDE PRESSURE LOW	1. Internal leak in the compressor. 2. Cylinder head gasket is leaking. 3. Drive belt slipping.	1. Replace the compressor. 2. Replace the compressor. 3. Adjust the belt tension.
LOW SIDE AND HIGH SIDE PRESSURE HIGH	1. Condenser fins obstructed. 2. Air in the system. 3. Expansion valve is defective. 4. Loose or worn fan belt. 5. Refrigerant system overcharged.	1. Clean condenser fins. 2. Evacuate, leak test and charge system. 3. Replace the expansion valve. 4. Adjust or replace belt. 5. Recover refrigerant and recharge.
LOW SIDE PRESSURE LOW AND HIGH SIDE PRESSURE HIGH	1. Expansion valve is defective. 2. Restriction in refrigerant hose. 3. Restriction in receiver/drier. 4. Restriction in condenser.	1. Replace the expansion valve. 2. Check hoses for kinks and replace if necessary. 3. Replace receiver/drier. 4. Replace condenser.
LOW SIDE AND HIGH SIDE PRESSURES NORMAL INADEQUATE COOLING	1. Air in the system. 2. Excessive oil in system.	1. Evacuate, leak test and charge system. 2. Discharge and drain oil. Restore proper oil level. Evacuate, leak test and charge system.

J9524-10

PERFORMANCE DIAGNOSIS

CONDITION	POSSIBLE CAUSES	CORRECTION
COMPRESSOR NOISE	1. Broken valve or piston ring. 2. Refrigerant system overcharged. 3. Incorrect oil level. 4. Loose or worn fan belt.	1. Replace compressor. 2. Evacuate, leak test and charge system. 3. Discharge and drain oil. Restore proper oil level. Evacuate, leak test and charge system. 4. Adjust or replace belt.
EXCESSIVE VIBRATION	1. Incorrect belt tension. 2. Clutch loose. 3. Refrigerant system overcharged. 4. Pulley is misaligned.	1. Adjust belt tension. 2. Tighten clutch. 3. Recover refrigerant and recharge. 4. Align pulley.
CONDENSATION LEAKING INSIDE VEHICLE	1. Evaporator drain plugged or kinked.	1. Clean drain hose and check for proper installation.
FROZEN EVAPORATOR COIL	1. Faulty thermostat on YJ vehicle. 2. Faulty fin sensing cycling clutch switch XJ vehicle.	1. Check for proper installation and adjustment. Replace if necessary. 2. Check for proper installation. Replace if necessary.

J9524-11

HEATING AND AIR CONDITIONING TEST PROCEDURES

INDEX

page

A/C Compressor Clutch 15
A/C Compressor Clutch Relay 15
A/C Compressor Clutch Relay 16
Air Conditioning Controls—XJ Vehicles 15
Air Conditioning Controls—YJ Vehicles 16
Blower Motor 17
Blower Motor Switch 16
Compressor Clutch 16
Fin Sensing Cycling Clutch Switch 15
Heater Diagnosis 17
Low-Pressure High-Pressure Cut-Off Switch 15
Low-Pressure High-Pressure Cut-Off Switch 16
Thermostatic Control 16

AIR CONDITIONING CONTROLS—XJ VEHICLES

The A/C Compressor Clutch is controlled by several components: the Pressure Cut-Off Switch, Cycling Clutch Switch, Clutch Relay and Powertrain Control Module (PCM).

Powertrain Control Module may delay A/C clutch engagement up to 30 seconds.

Refer to Group 8W Wiring Diagrams for wiring and terminals. Use volt ohmmeter to test switches.

A/C COMPRESSOR CLUTCH

The clutch assembly consists of a stationary electromagnetic coil, hub bearing pulley assembly, and clutch plate. When the coil is energized the plate is magnetically engaged with the pulley and turns the compressor shaft.

A/C COMPRESSOR CLUTCH TEST

(1) Unplug clutch coil connector.

(2) Connect a jumper wire from the battery positive post to the clutch coil terminal. The clutch should engage, if not leave jumper wire connected and go to next step.

(3) Connect a jumper wire from clutch coil frame to chassis ground. The clutch should engage if not repair clutch coil ground or replace coil.

A/C COMPRESSOR CLUTCH RELAY

The A/C compressor clutch relay controls the 12-volt source to the A/C clutch. The relay is activated when the PCM receives a A/C request signal from the fin-sensed cycling clutch switch. The PCM then sends a ground signal to the relay. The relay is activated and sends 12-volts to the clutch coil which energizes the clutch. The relay is located in the power distribution center.

COMPRESSOR CLUTCH RELAY TEST

For test procedure refer to Powertrain Diagnostic Service Manual for A/C clutch relay circuit test.

LOW-PRESSURE HIGH-PRESSURE CUT-OFF SWITCH

The pressure cut-off switch is located on the filter drier and is wired in series with compressor clutch. The switch interrupts the power to the compressor clutch circuit when the pressure drops to 193 kPa (28 psi) or increases above 3100 to 3375 kPa (450 to 490 psi).

PRESSURE CUT-OFF SWITCH TEST

(1) Verify system has correct refrigerant charge.

(2) Turn ignition switch to RUN, A/C blower switch to ON and control set to MAX.

(3) Unplug pressure cut-off switch and test feed circuit from select switch. It should be battery voltage if not, repair open to select switch.

(4) Test for continuity between the switch terminals. If continuity is not present recover refrigerant from the system. Replace switch, evacuate and recharge system.

FIN SENSING CYCLING CLUTCH SWITCH

The switch is attached to the evaporator coil with the temperature sensing probe inserted into the coil fins. This switch prevents condensate water on the evaporator coil from freezing. It does this by sending signals to the PCM to cycling the compressor clutch on and off.

FIN-SENSED CYCLING CLUTCH SWITCH TEST

Test area ambient temperature should be around 21°C (70°F) for test.

(1) Verify system has correct refrigerant charge.

(2) Start Engine and turn on A/C.

(3) If the compressor clutch cycles ON and OFF 2 to 3 times per minute the cycling clutch switch is normal. The ambient temperature should be between 20°C-30°C (68°F-90°F). Above 32°C (90°F) the compressor clutch may stay engaged (non cycling) due to the high heat load, this condition is normal. If the compressor clutch fails to engage go to next step.

(4) Disconnect wiring harness connector from switch. With a volt meter test feed circuit from cut-

off switch for battery voltage. If no voltage is present test pressure cut-off switch. If voltage is present go to next step.

(5) With ohmmeter test harness connector ground circuit for continuity to ground. If circuit is open, (no continuity) repair ground circuit. If circuit test OK and clutch does not engage refer to Powertrain Diagnostic Service Manual for A/C clutch circuit test.

AIR CONDITIONING CONTROLS—YJ VEHICLES

The air conditioning circuit consists of 3 segments; battery supply, blower motor and compressor clutch. The 3 segments have a common connection point at the blower switch.

The power supply circuit extends from the HTR/FAN fuse to the blower switch. From the blower switch, battery feed is routed to the blower motor and compressor clutch circuit.

Refer to Group 8W Wiring Diagrams for wiring schematic and terminals. Use volt ohmmeter to test switches.

COMPRESSOR CLUTCH

The clutch assembly consists of a stationary electromagnetic coil, hub bearing pulley assembly, and clutch plate. When the coil is energized the plate is magnetically engaged with the pulley and turns the compressor shaft.

COMPRESSOR CLUTCH TEST

(1) Unplug clutch coil connector.

(2) Connect jumper wire from battery positive post to clutch coil connector. The clutch should engage, if not leave jumper wire connected and go to next step.

(3) Connect jumper wire from clutch coil frame to chassis ground. The clutch should engage, if not repair clutch coil ground or replace coil.

A/C COMPRESSOR CLUTCH RELAY

The A/C compressor clutch relay controls the 12-volt source to the A/C clutch. The relay is activated when the PCM receives a A/C request signal. The PCM then sends a ground signal to the relay. The relay is activated and sends 12-volts to the clutch coil which energizes the clutch. The relay is located in the power distribution center.

COMPRESSOR CLUTCH RELAY TEST

For test procedure refer to Powertrain Diagnostic Service Manual for A/C clutch relay circuit test.

LOW-PRESSURE HIGH-PRESSURE CUT-OFF SWITCH

The pressure cut-off switch is located on the filter drier and is wired in series with compressor clutch. The switch interrupts the power to the compressor clutch circuit when the pressure drops to 193 kPa (28 psi) or increases above 3100 to 3375 kPa (450 to 490 psi).

PRESSURE CUT-OFF SWITCH TEST

(1) Turn ignition switch to RUN, A/C blower switch to ON and control set to MAX.

(2) Unplug pressure cut-off switch connector and test feed circuit from the thermostatic, should be battery voltage. If not, proceed to thermostatic control tests.

(3) Test for continuity between the switch terminals. If continuity is not present recover refrigerant system, replace switch, evacuate and recharge system.

THERMOSTATIC CONTROL

Cycling of the compressor and therefore the temperature of the outlet air is regulated by the thermostatic control. A thermal sensor extends from the control to the evaporator housing. When the temperature of the evaporator drops below the set temperature, the thermostatic control opens the clutch circuit. The circuit remains open until evaporator temperature rises above the set temperature.

THERMOSTATIC CONTROL TEST

(1) Turn ignition switch to RUN, A/C blower switch to ON and thermostatic control set to MAX cool.

(2) Test thermostatic control feed terminal from blower switch, should be battery voltage. If not repair open from blower switch.

(3) Test thermostatic control output terminal to pressure cut-out switch, should be battery voltage. If not, replace thermostatic control.

BLOWER MOTOR SWITCH

The blower switch controls blower motor speed. The blower motor segment consists of the 3 wires from the blower switch to the motor. Through the switch, the 3 wires connect the motor brushes to battery supply. When connected to battery feed, the separate brushes provide the 3 blower speeds LO, MED, and HIGH.

BLOWER MOTOR SWITCH TEST

(1) Turn ignition to RUN position.

(2) Test battery side of fuse for battery voltage. If not, repair open from ignition switch.

(3) Test A/C blower switch feed circuit from fuse box should be battery voltage. If not, repair open from fuse panel.

(4) Test A/C blower switch LO terminal with blower switch in LO, should be battery voltage. If not, replace switch.

(5) Test A/C blower switch MED terminal with blower switch in MED, should be battery voltage. If not, replace switch.

(6) Test A/C blower switch HIGH terminal with blower switch in HIGH, should be battery voltage. If not, replace switch.

BLOWER MOTOR

The A/C blower motor is attached to the evaporator housing mounted under the instrument panel. The motor has a ground wire and 3 wires connect to the motor brushes. When voltage is applied to the separate brushes it provides the 3 blower speeds LO, MED, and HIGH.

BLOWER MOTOR TEST

Turn ignition switch to RUN for voltage tests and turn ignition switch to OFF for resistance test.

(1) Test A/C blower motor ground terminal should be 0 ohms. If not, repair ground circuit.

(2) Test A/C blower motor connector LO terminal with blower switch in LO, should be battery voltage. If not repair open from blower switch. If the blower motor is still inoperative replace motor.

(3) Test A/C blower motor connector MED terminal with blower switch in MED, should be battery voltage. If not repair open from blower switch. If the blower motor is still inoperative replace motor.

(4) Test A/C blower motor connector HIGH terminal with blower switch in HIGH, should be battery voltage. If not, repair open from blower switch. If the blower motor is still inoperative, replace motor.

HEATER DIAGNOSIS

On LHD XJ vehicles a water valve controls coolant flow to the heater core. The valve is vacuum operated. When vacuum is applied, the valve opens and coolant is directed through the heater core and back to the engine. When the water valve is closed (no vacuum applied) coolant flow bypasses the heater core back to the engine.

The heating system receives its battery feed from the fuse box. On YJ vehicles the feed circuit runs to the HEATER/OFF switch and then to the BLOWER switch. On XJ vehicles the feed circuit runs to the HEAT/MODE switch and then to the BLOWER switch.

The blower speed is controlled by the blower switch and blower resistors. With the switch in LO, battery voltage is supplied to the motor through all of the resistors. The motor runs slowly. When the blower switch is moved to a higher speed, battery voltage increases to the blower motor which increase its speed. This is accomplished by bypassing some of the blower resistors. When the switch is in HI, blower resistors are bypassed and battery voltage is applied directly to the blower motor.

The following chart has been developed for quick reference.

Refer to the Group 8W Wiring Diagrams for complete wiring schematic.

HEATING SYSTEM DIAGNOSIS

CONDITION	POSSIBLE CAUSE	CORRECTION
BLOWER MOTOR WILL NOT TURN AT ANY SPEED	(1) Blown fuse. (2) Loose connection. (3) Defective ground. (4) Faulty switch. (5) Faulty motor. (6) Faulty resistor.	(1) Replace fuse. (2) Inspect and tighten. (3) Clean and tighten. (4) Replace switch. (5) Replace motor. (6) Replace resistor.
BLOWER MOTOR TURNS AT ONE SPEED ONLY	(1) Faulty switch. (2) Faulty resistor.	(1) Replace switch. (2) Replace resistor.
BLOWER MOTOR TURNS BUT DOES NOT CIRCULATE AIR	(1) Intake blocked. (2) Fan not secured to the motor shaft.. (3) Outside air mode door inoperative.	(1) Clean intake. (2) Tighten securely. (3) a. Check and replace outside air door vacuum motor, if necessary. b. Check and repair vacuum controls, as required.
HEATER WILL NOT HEAT	(1) Coolant does not reach proper temperature. (2) Heater core blocked internally. (3) Heater core air-bound. (4) Blend-air door not in proper position.	(1) Check and replace thermostat if necessary. (2) Flush or replace core if necessary. (3) Purge air from core. (4) Adjust cable.
HEATER WILL NOT DEFROST	(1) Control cable adjustment incorrect or vacuum motor inoperative. (2) Defroster hose damaged or duct seal leakage.	(1) Adjust control cable or replace vacuum motor. (2) Replace defroster hose or correct duct seal.

J9124-49

COMPRESSOR SERVICE

DESCRIPTION

The A/C system uses a Sanden SD7H15 compressor. The compressor is a 7 piston design.

The clutch used on the compressor consists of 3 basic components: the pulley and bearing hub, clutch plate and field coil (Fig. 1). The pulley and field coil are attached to the front of the compressor with tapered snap rings. The compressor has a splined shaft and the clutch plate is retained on the shaft with a self-locking nut.

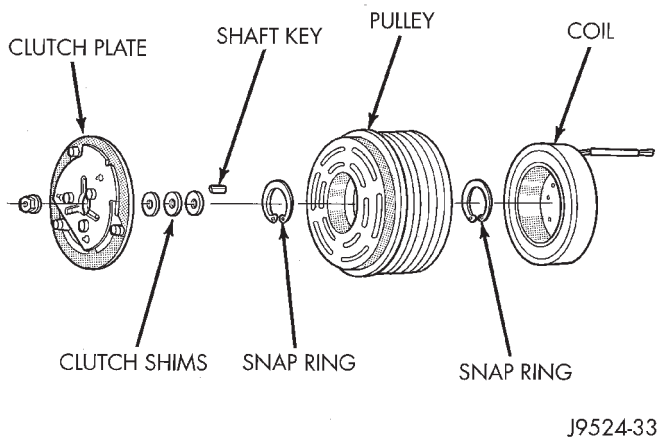

Fig. 1 Compressor Clutch

COMPRESSOR

REVIEW WARNINGS AND CAUTIONS IN THIS GROUP BEFORE PROCEEDING WITH THIS PROCEDURE.

REMOVAL

(1) Recover refrigerant from A/C system.
(2) Disconnect negative cable from battery.
(3) Disconnect the clutch lead wire.
(4) Remove the discharge and suction lines from the compressor. Plug or tape all the openings.
(5) Remove the serpentine drive belt (refer to Group 7, Cooling System for the proper procedure).
(6) Remove the bolts and lift the compressor from the mounting bracket (Figs. 2 and 3).

INSTALLATION

If a replacement compressor is being installed; check the oil level. Add or subtract oil as necessary and install the magnetic clutch on the compressor.

(1) If the mounting bracket was removed, install the bracket to the block. Tighten the mounting bolts to 27 N·m (20 ft. lbs.) torque.
(2) Install the compressor on the mounting bracket. Tighten the bolts to 27 N·m (20 ft. lbs.) torque.

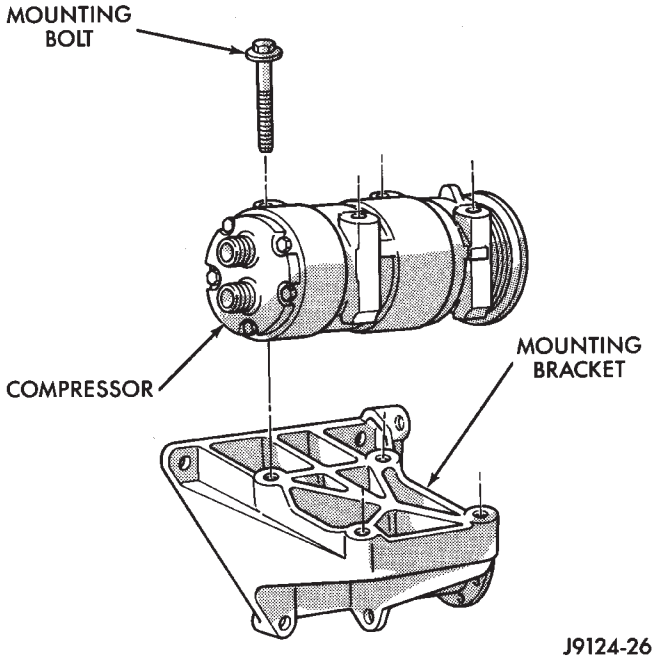

Fig. 2 Compressor and Mounting Bracket (LH Drive Vehicles)

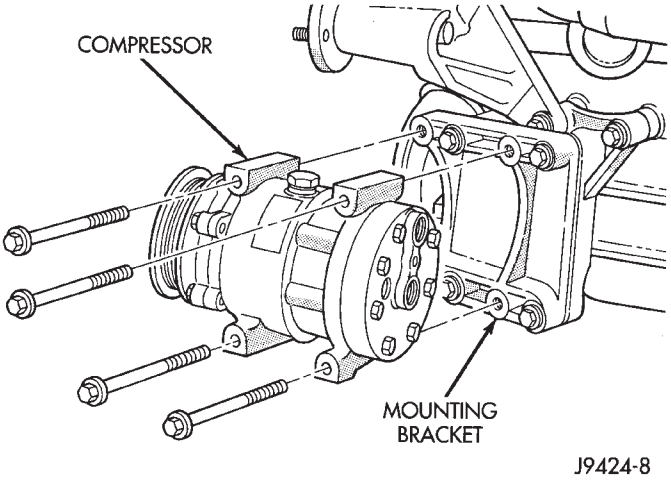

Fig. 3 Compressor and Mounting Bracket (RH Drive Vehicles)

(3) Install the serpentine drive belt (refer to Group 7, Cooling System for the proper procedure).
(4) Tighten the serpentine drive belt to the specified tension.

- New belt tension—800-900 N (180-200 lb-f).
- Used belt tension—623-712 N (140-160 lb-f).

(5) Remove the tape or plastic plugs from all the suction and discharge openings and install lines on the compressor.
(6) Connect the clutch lead wire.
(7) Connect negative cable to battery.
(8) Evacuate, charge and test the system for leaks.

COMPRESSOR CLUTCH ASSEMBLY

The compressor clutch can be serviced in the vehicle.

REMOVAL

(1) Remove the serpentine drive belt (refer to Group 7, Cooling System for the proper procedure).

(2) Remove compressor mounting bolts and lift the compressor from the mounting bracket. Support the compressor to work on clutch.

(3) Insert the 2 pins of spanner C-4489 into holes of the clutch plate. Hold clutch plate stationary and remove hex nut (Fig. 4).

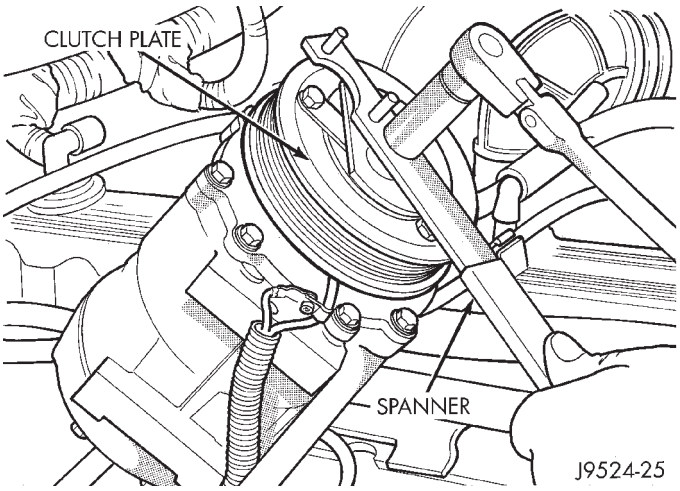

Fig. 4 Hex Nut Removal

(4) Remove clutch plate with puller 6461 (Fig. 5).

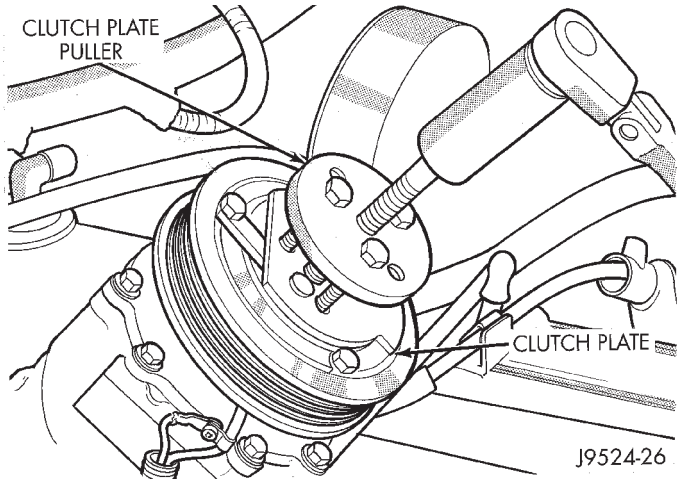

Fig. 5 Clutch Plate Puller

(5) Remove key and clutch shims.

(6) Remove the external front housing snap ring with snap ring pliers (Fig. 6).

(7) Install lip of rotor puller 6141-1 into the snap ring groove exposed in the previous step and install shaft protector 6141-2 (Fig. 7).

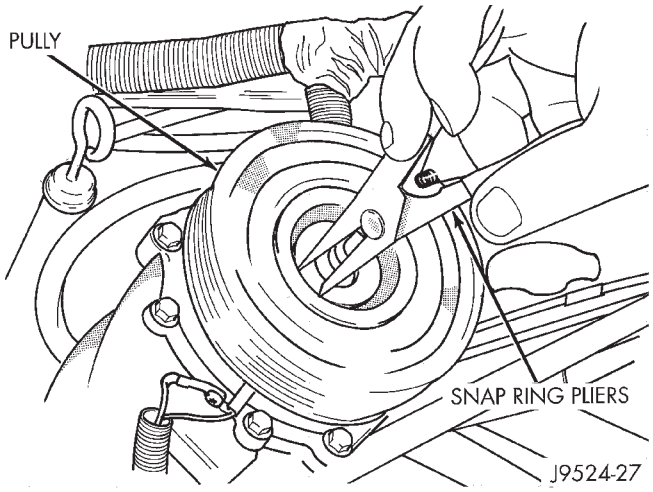

Fig. 6 External Snap Ring Removal

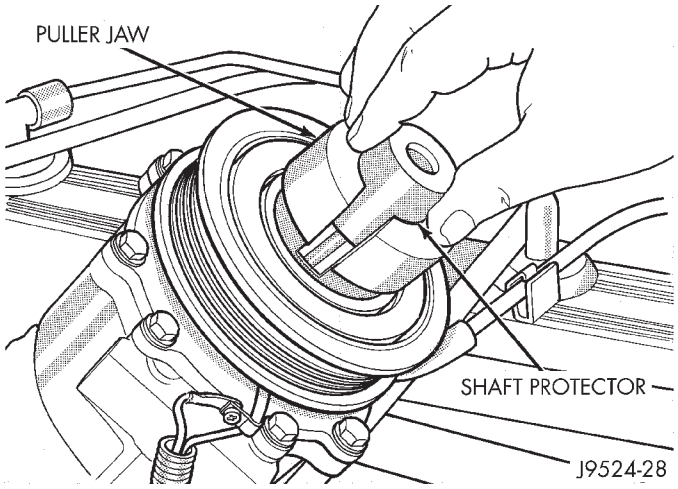

Fig. 7 Shaft Protector and Puller

(8) Install puller 6461 and through bolts into the jaws finger tight (Fig. 8). Turn puller center bolt clockwise until rotor pulley is free.

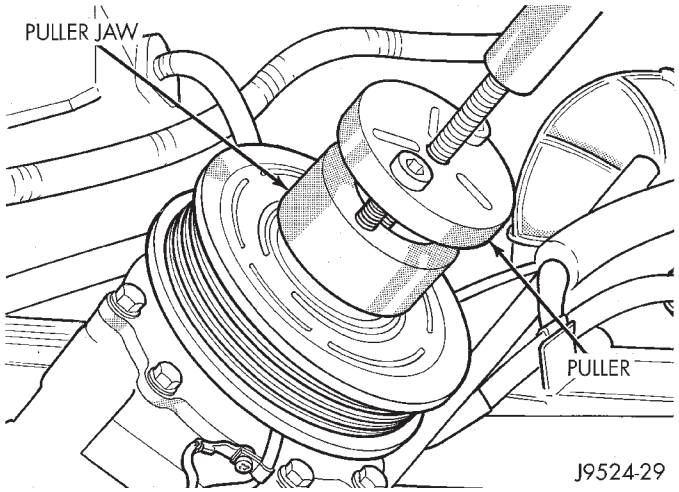

Fig. 8 Install Puller Plate

(9) Remove the screw and retainer from coil lead wire on compressor front housing (Fig. 9).

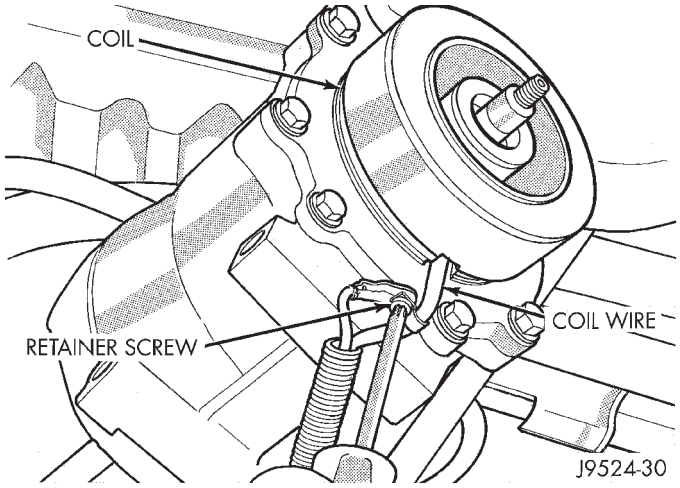

Fig. 9 Coil Lead Wire

(10) Remove snap ring from compressor hub and remove field coil (Fig. 10).

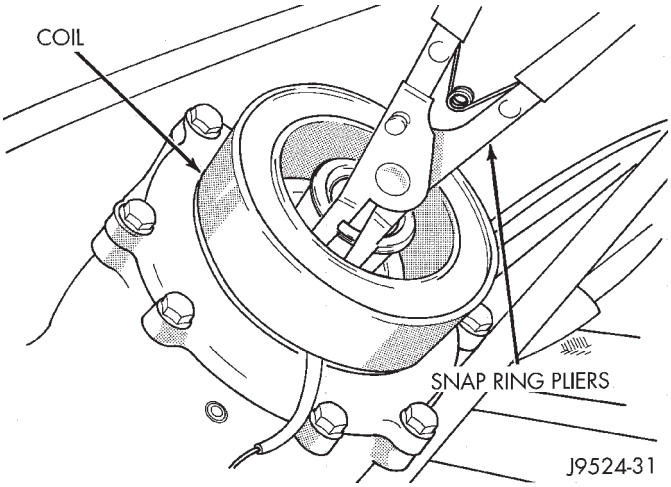

Fig. 10 Snap Ring and Field Coil Removal

INSTALLATION

(1) Install field coil and snap ring.

(2) Install coil harness retaining clip on compressor and tighten the retaining screw.

(3) Align rotor assembly squarely on the front housing hub.

(4) Install pulley bearing assembly with Installer 6871 (Fig. 11).

Thread Installer on shaft then turn nut until pulley assembly is seated.

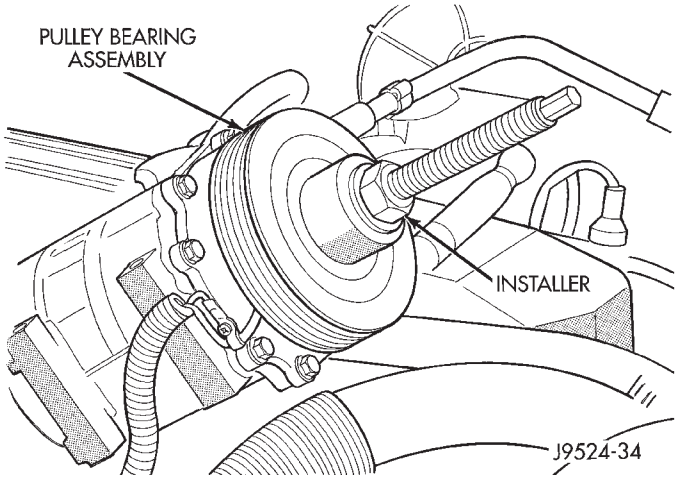

Fig. 11 Pulley Installer

(5) Install external front housing snap ring with spread type snap ring pliers.

(6) Install key and original clutch shims on compressor shaft.

(7) Install clutch plate with driver 6463 (Fig. 12). Install shaft nut and tighten to 14.4 N·m (10.5 ft. lbs.) torque.

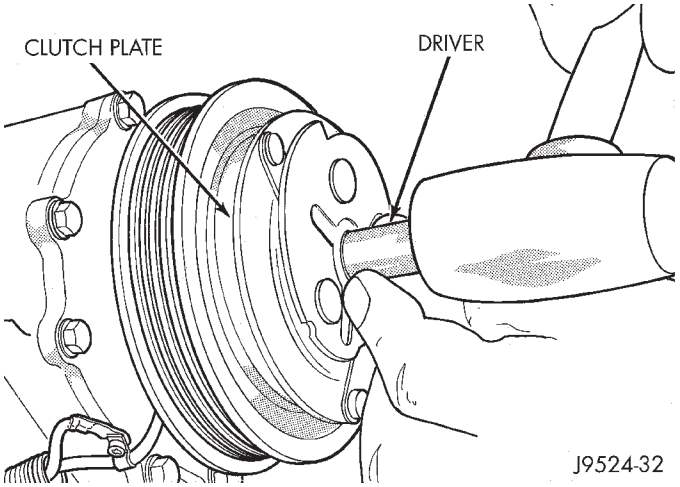

Fig. 12 Clutch Plate Driver

(8) Check air gap with feeler gauge (Fig. 13). If the air gap does not meet the specification add or subtract shims as required. The specification is 0.41-0.79 mm (0.016-0.031 inch). If air gap is not consistent around the circumference, lightly pry up at the minimum variations. Lightly tap down at points of maximum variation.

The air gap is determined by the spacer shims. When installing the original or a new clutch assembly, try the original shims first. When installing a new clutch onto a compressor that previously did not have a clutch, use 0.040, 0.020, and 0.005 shims from the clutch accessory sack.

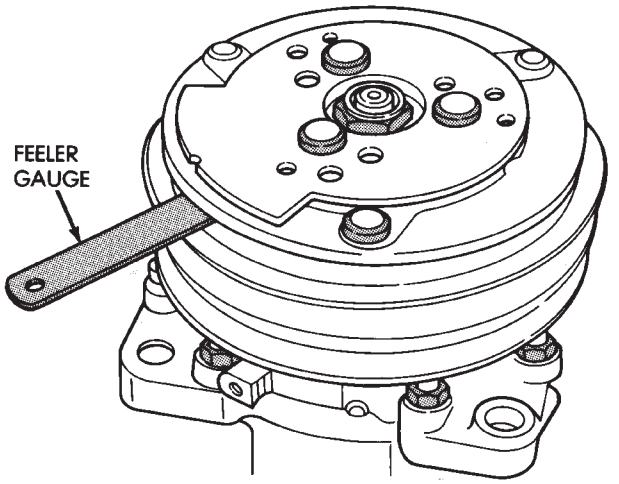

Fig. 13 Check Air Gap

COMPONENT SERVICE—XJ VEHICLES

INDEX

	page
A/C Recirculating Door Vacuum Motor Replacement	27
Blower Motor Resistors Replacement	31
Blower Motor/Fan Replacement	24
Condenser Filter Drier—2.5L Engines	27
Condenser—4.0L Engines	28
Description	23
Evaporator Coil	30
Evaporator/Blower Housing	29
Expansion Valve	31
Filter Drier—4.0L Engines	28
Fin Sensing Cycling Clutch Switch	31
Heater and A/C Control Replacement	23
Heater Core	26
Heater Housing Replacement	26
Heater/Defroster/Instrument Panel Outlet Vacuum Motor Replacement	26

DESCRIPTION

The Climate Control System combines air conditioning, heating and ventilating capabilities for vehicles equipped with air conditioning. Vehicles without air conditioning perform heating and ventilating functions without the air conditioning evaporator.

Both systems consist basically of 2 parts:

- Blower and Air Inlet Assembly
- Heater Core and Air Distribution Assembly

These unit may be removed separately from under the instrument panel for service.

HEATER AND A/C CONTROL REPLACEMENT

(1) Disconnect negative cable from battery.

(2) Remove the instrument panel bezel attaching screws and remove the instrument panel bezel (Fig. 1). Bezel is snap fit at locations shown.

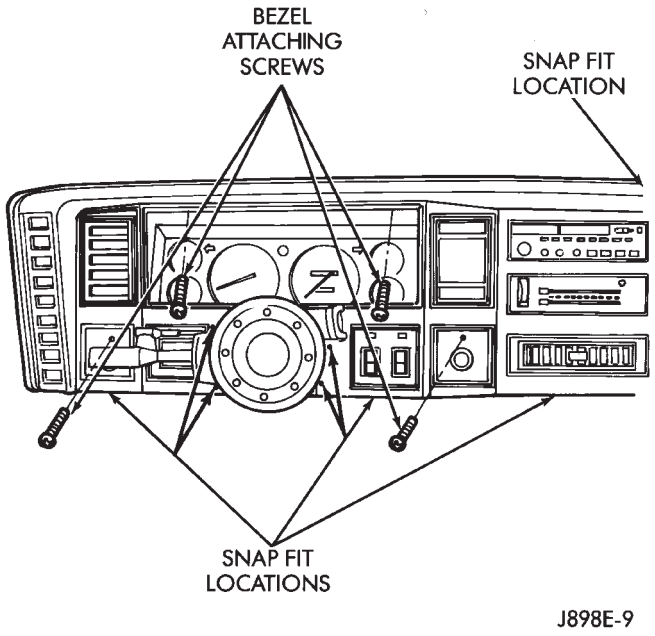

Fig. 1 Instrument Bezel

(3) Remove the radio attaching screws (Fig. 2).

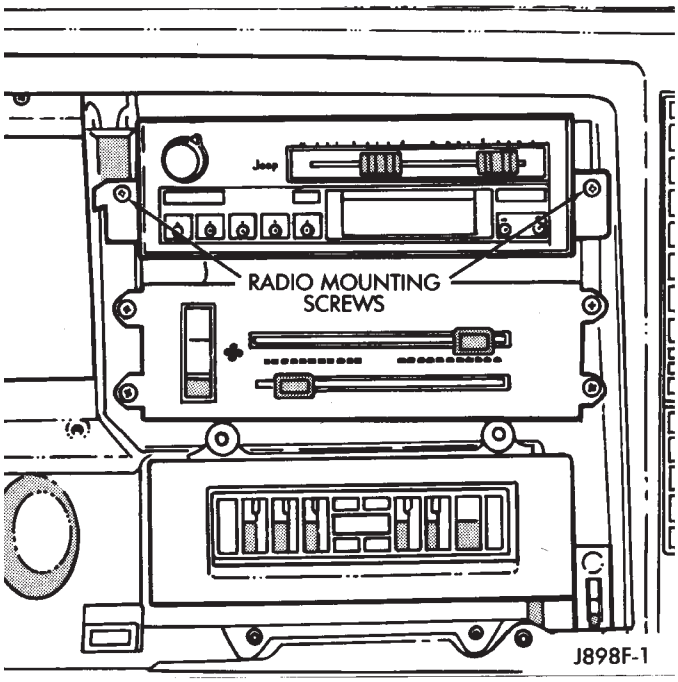

Fig. 2 Radio Mounting Screws

(4) Disconnect the radio electrical connector, ground lead and antenna lead (Fig. 3).

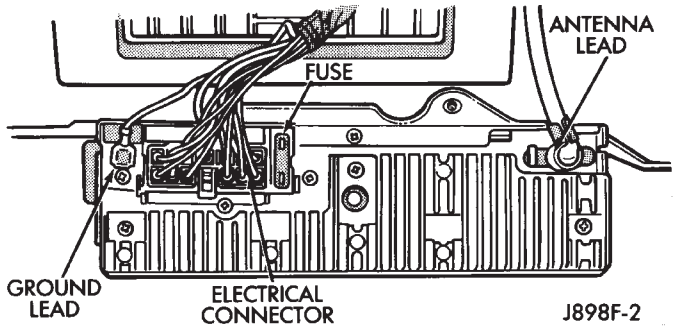

Fig. 3 Radio Wiring Harness

(5) Remove the A/C-heater control panel screws (Fig. 4).

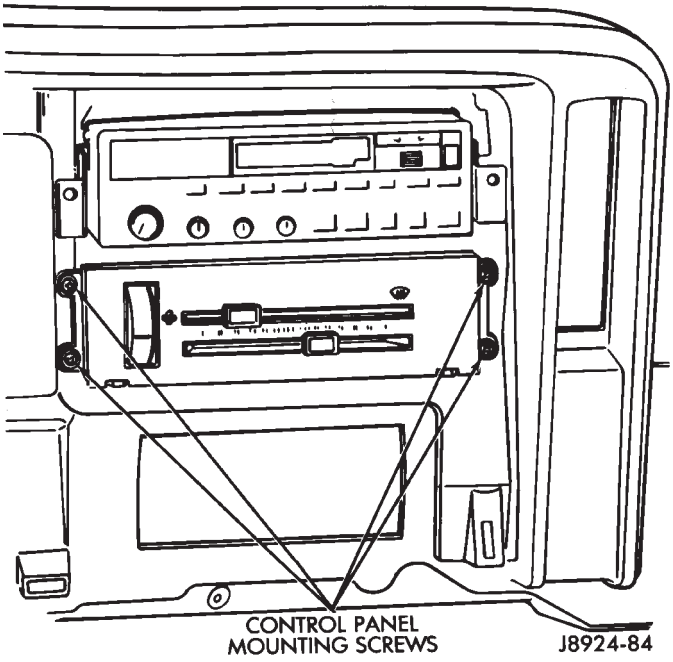

Fig. 4 Control Panel Mounting Screws

(6) Remove the electrical connectors (Fig. 5).

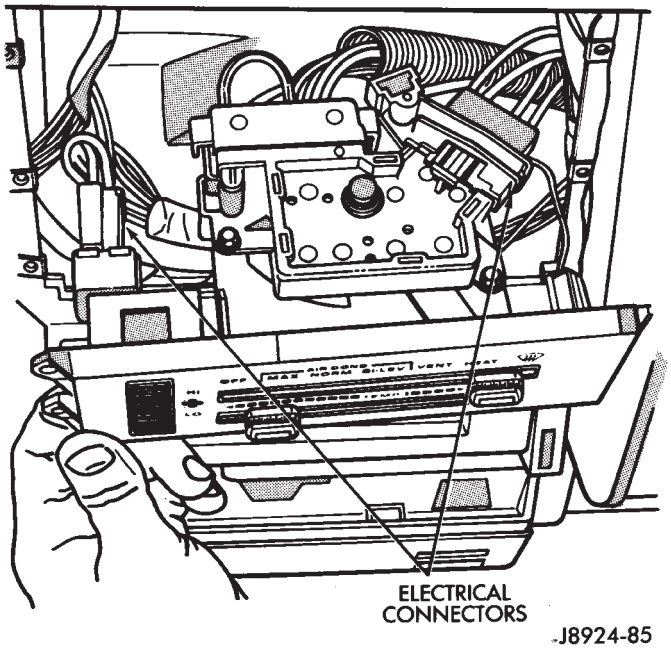

Fig. 5 Electrical Connectors

(7) Disconnect the vacuum hoses by releasing the locking tabs (Fig. 6).

(8) Remove the control cable locking tab by using a screwdriver to release the tab (Fig. 7).

(9) Remove the ring on the end of the control cable from the arm on the bottom of the control panel (Fig. 8).

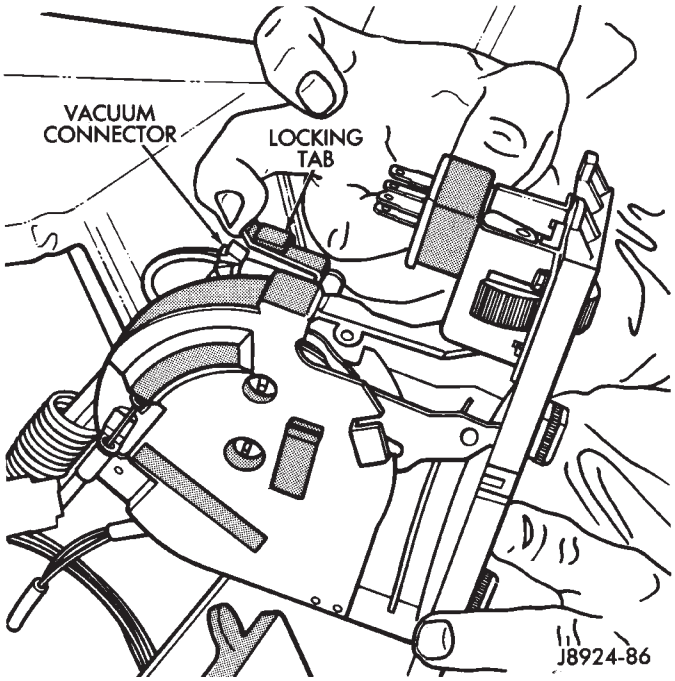

Fig. 6 Vacuum Hose Connector

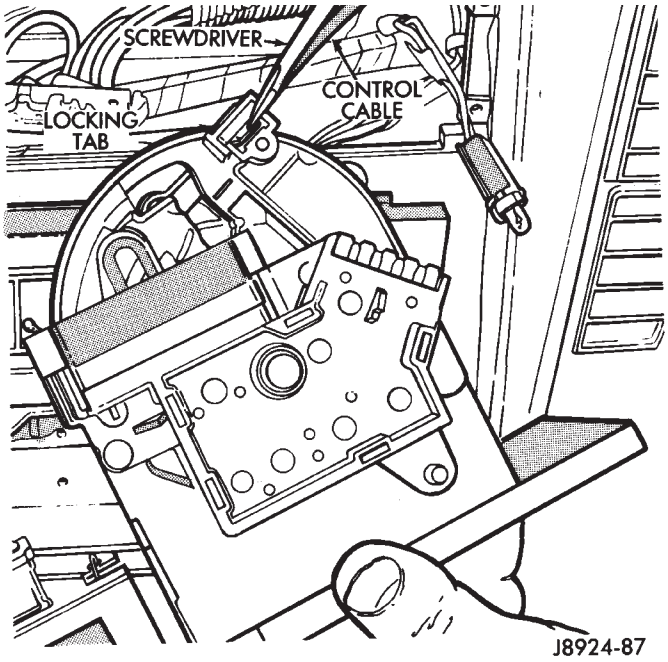

Fig. 7 Control Cable Locking Tab

To Install the A/C-heater control panel, reverse the removal procedures.

BLOWER MOTOR/FAN REPLACEMENT

2.5L ENGINE

(1) Disconnect the blower motor wires (Fig. 9).

(2) Remove the blower motor mounting bolts (Fig. 10).

(3) Remove the blower motor and fan assembly.

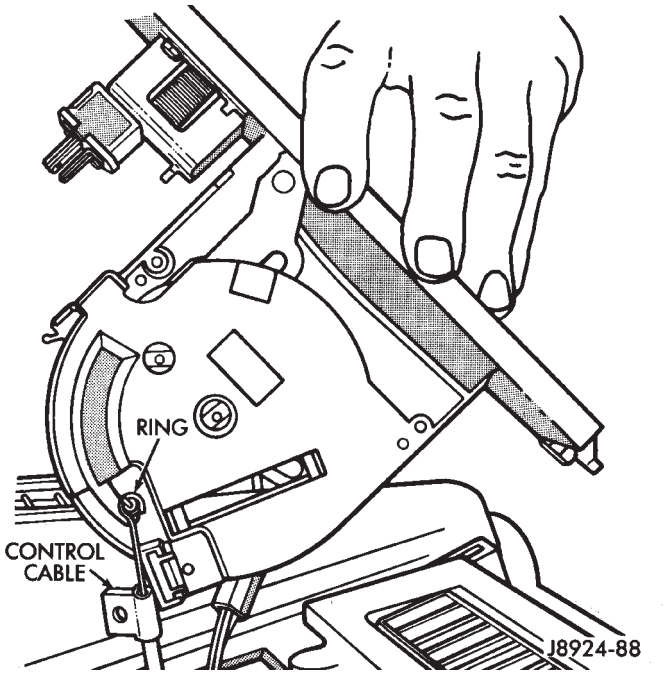

Fig. 8 Control Cable and Ring

(4) Remove the blower motor fan from the motor shaft for access to the motor attaching nuts (Fig. 11).

To install the blower fan and motor, reverse the removal procedures.

4.0L ENGINE

(1) Remove the washer fluid tank.

(2) Disconnect the blower motor wires (Fig. 9).

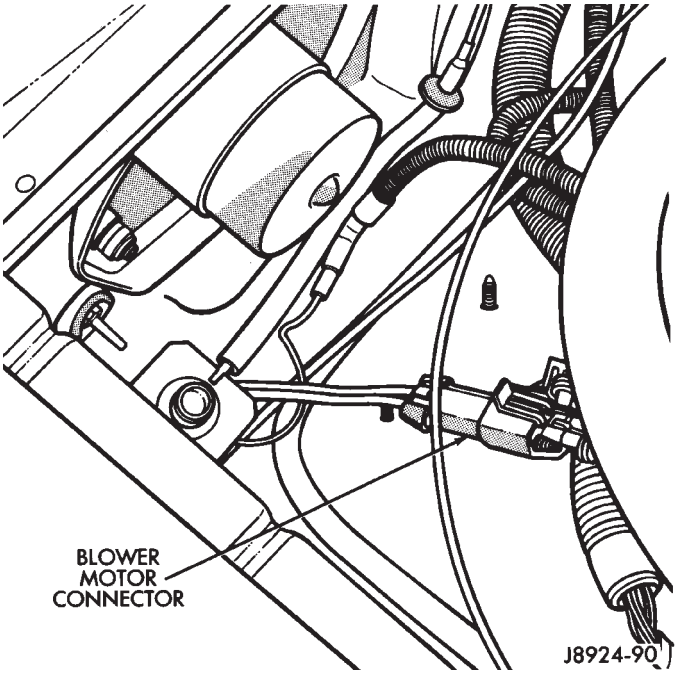

Fig. 9 Blower Motor Connector

(3) Remove the blower motor mounting bolts (Fig. 10).

(4) Remove the blower motor and fan assembly.

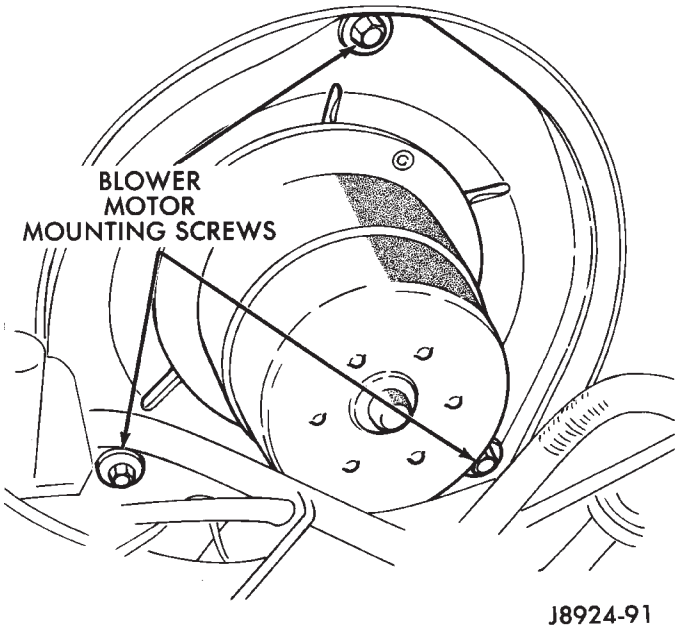

Fig. 10 Blower Motor Mounting Screws

(5) Remove the blower motor fan from the motor shaft for access to the motor attaching nuts (Fig. 11).

To install the blower fan and motor, reverse the removal procedures. **The ears (A) and (B) of the retainer clip must be over the flat surface on the motor shaft (Fig. 11).**

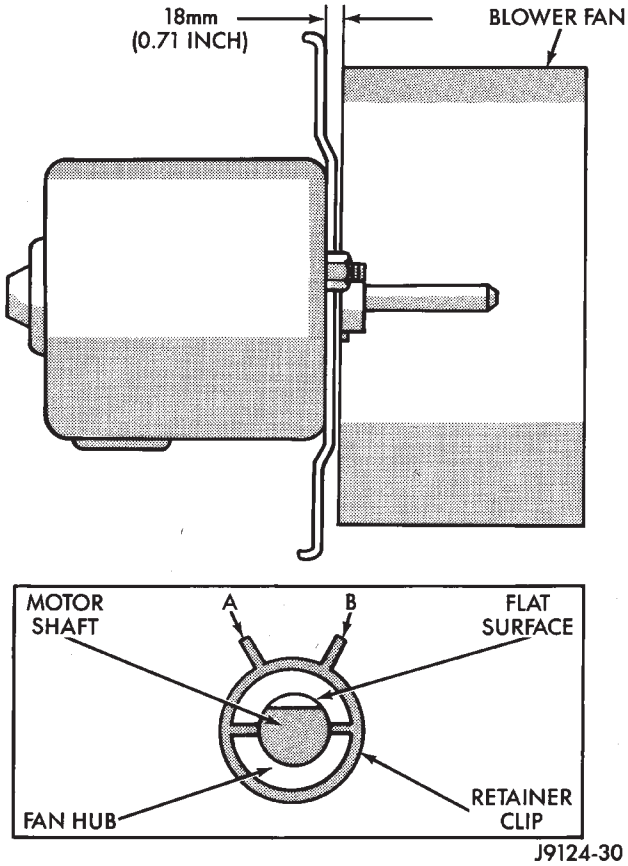

Fig. 11 Blower Fan

HEATER CORE

REVIEW WARNINGS AND CAUTIONS IN THIS GROUP BEFORE PERFORMING THIS OPERATION.

REMOVAL

(1) Drain the radiator.
(2) Disconnect heater hoses at heater core tubes.
(3) Remove heater/evaporator housing side cover.
(4) Remove retaining screws and remove heater core by pulling it straight out of the housing (Fig. 12).

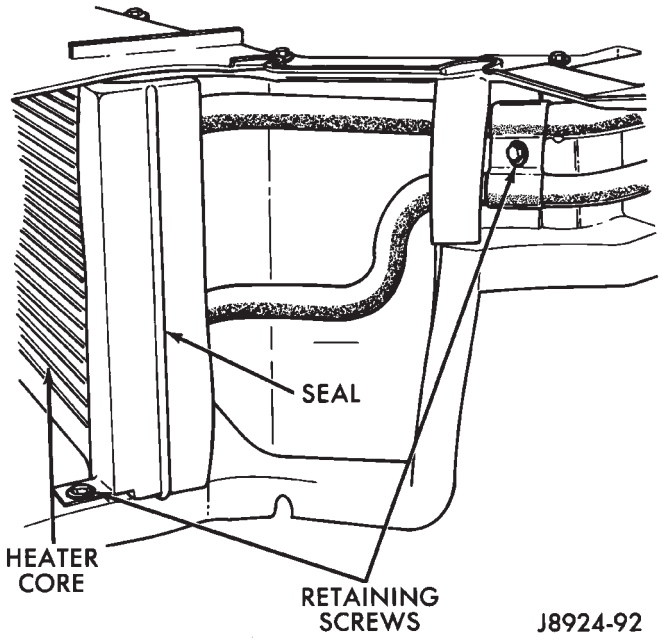

Fig. 12 Heater Core

INSTALLATION

(1) Install the heater core into the housing and install the screws.
(2) Install the evaporator/blower housing side cover.
(3) Install heater hoses to the heater core.
(4) Fill the cooling system.

HEATER HOUSING REPLACEMENT

REVIEW WARNINGS AND CAUTIONS IN THIS GROUP BEFORE PERFORMING THIS OPERATION.

REMOVAL

(1) Disconnect negative cable from battery.
(2) Remove center console. Refer to Group 23 body for procedure.
(3) Remove instrument panel refer to Group 23.
(4) Remove heater hoses.
(5) Recover refrigerant system and remove A/C lines if equipped.
(6) Remove heater/evaporator housing side cover.
(7) Remove the heater core.
(8) Remove the defroster duct.
(9) Disconnect the vacuum hoses from the heater core housing vacuum motors.
(10) Remove the housing retaining nuts in the engine compartment. Remove the heater core housing.

INSTALLATION

(1) Transfer the vacuum motors, etc. to the replacement housing.
(2) Install the heater core housing and heater housing retaining nuts in the engine compartment.
(3) Install the vacuum hoses.
(4) Install the defroster duct.
(5) Install the heater core.
(6) Install heater/evaporator housing side cover.
(7) Remove heater hoses.
(8) Install A/C lines if equipped and evacuate and charge refrigerant system.
(9) Remove instrument panel refer to Group 23.
(10) Install center console. Refer to Group 23 body for procedure.
(11) Install negative cable from battery.
(12) Fill coolant system.

HEATER/DEFROSTER/INSTRUMENT PANEL OUTLET VACUUM MOTOR REPLACEMENT

(1) Remove center console. Refer to Group 23 body for procedure.
(2) Remove the lower instrument panel.
(3) Disconnect the vacuum hose(s) from the vacuum motor.
(4) Remove the vacuum motor attaching nuts and remove the vacuum motor from the bracket.
(5) Remove the vacuum motor linkage retaining clip and remove the rod from the door actuating lever (Fig. 13).

To install a vacuum motor, reverse the removal procedure.

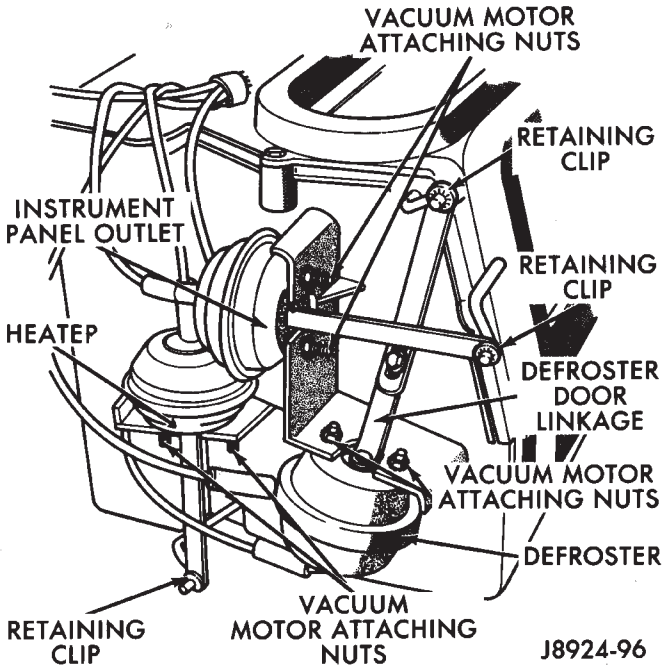

Fig. 13 Vacuum Motor

A/C RECIRCULATING DOOR VACUUM MOTOR REPLACEMENT

(1) Remove the vacuum motor cover (Fig. 14).

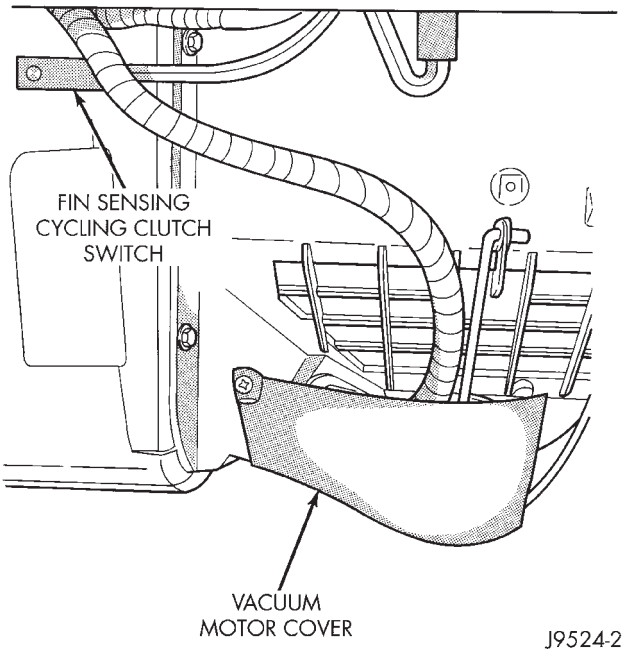

Fig. 14 Vacuum Door Motor Cover

(2) Disconnect the vacuum hose (Fig. 15).

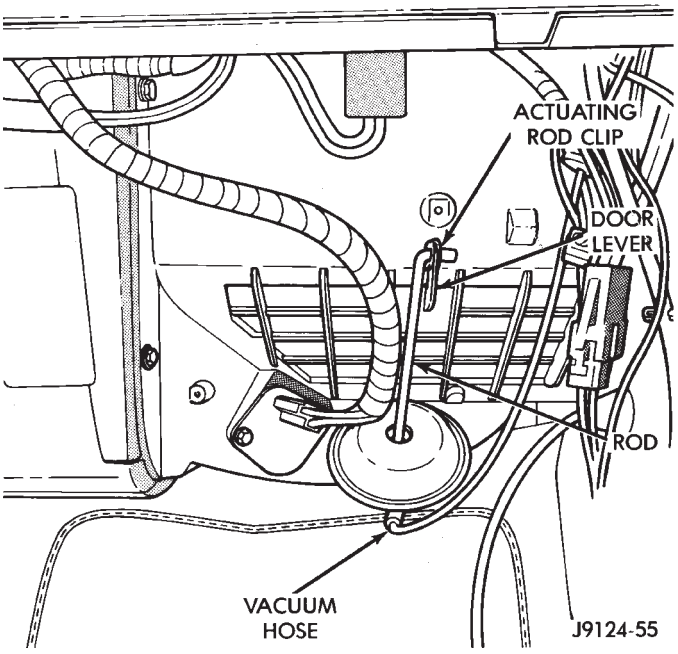

Fig. 15 Vacuum Door Motor

(3) Remove the actuating rod clip and disengage the rod from the door lever.

(4) Remove the vacuum motor retaining nuts and then remove the vacuum motor.

To install the motor, reverse the removal procedures.

CONDENSER FILTER DRIER—2.5L ENGINES

REVIEW WARNINGS AND CAUTIONS IN THIS GROUP BEFORE PERFORMING THIS OPERATION.

REMOVAL

(1) Drain the radiator.

(2) Disconnect the fan shroud and the radiator hoses.

(3) Disconnect the transmission cooler lines (if equipped with automatic transmission).

(4) Recover refrigerant from the system and disconnect A/C lines from the condenser.

(5) Unplug the harness from the pressure cut-off switch (Fig. 16).

(6) Remove the radiator and condenser as an assembly.

(7) Remove the retaining bolts and separate the condenser from the radiator.

(8) Remove the filter drier from the condenser. **Keep filter/drier openings plugged at all times to prevent moisture from entering the filter drier.**

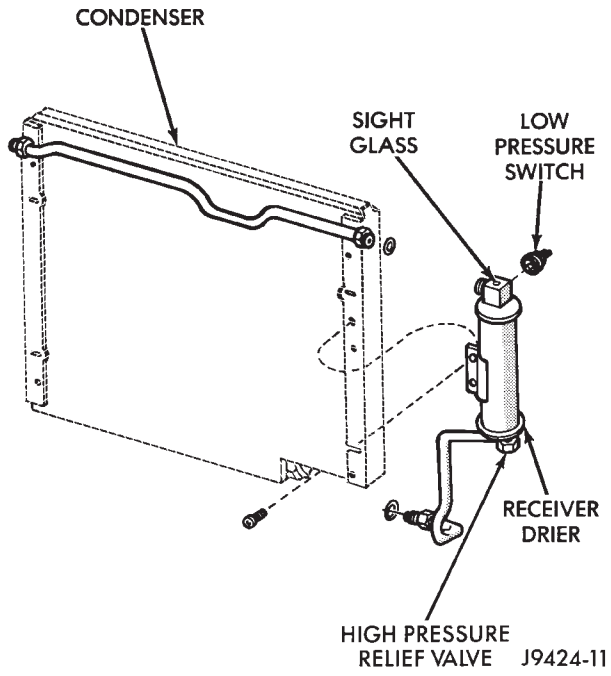

Fig. 16 Condenser Filter Drier—LHD 2.5L Engine

INSTALLATION

Add 30 ml (1 fluid oz.) of refrigerant oil to the A/C system if the condenser or filter drier is replaced.

(1) Remove the plugs from the filter drier openings. Install filter drier into the condenser.

(2) Install the condenser to the radiator. Tighten the retaining bolts.

(3) Install the radiator and condenser as an assembly (refer to Group 7, Cooling System for the proper procedure).

(4) Plug the harness into the low pressure switch (Fig. 16).
(5) Connect the A/C hoses to the condenser.
(6) Connect the transmission cooler lines (if equipped with automatic transmission).
(7) Connect the fan shroud and the radiator hoses.
(8) Fill coolant system (Refer to cooling for proper procedure).
(9) Evacuate and charge the A/C system.

CONDENSER—4.0L ENGINES

REVIEW WARNINGS AND CAUTIONS IN THIS GROUP BEFORE PERFORMING THIS OPERATION.

REMOVAL

(1) Recover refrigerant from the system.
(2) Remove the upper radiator support.
(3) Remove the fan shroud and remove electric fan from the radiator (Fig. 17). Refer to Group 7 Cooling for procedure.

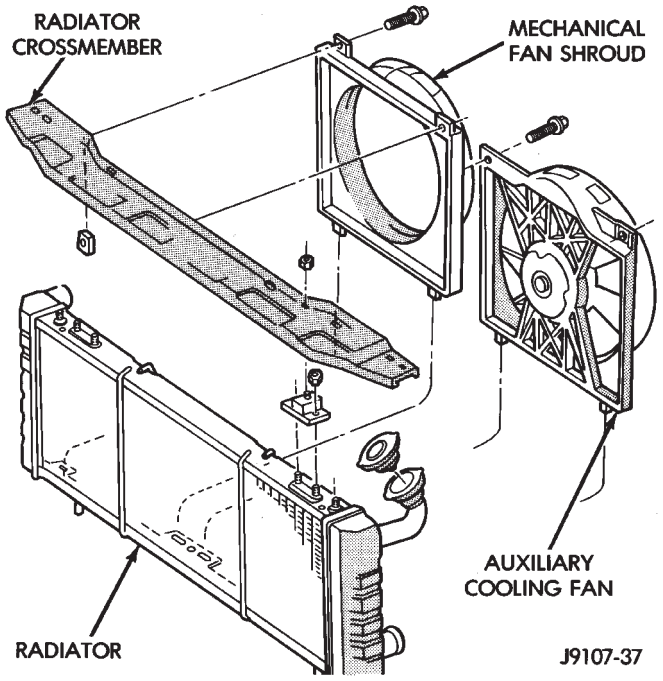

Fig. 17 Fan and Shroud

(4) Remove fan from engine. Refer to Group 7 Cooling for procedure.
(5) Remove air cleaner assembly. Refer to Group 14 Fuel System for procedure.
(6) Remove grille.
(7) Remove brackets holding condenser to the radiator.
(8) Carefully lift radiator and move toward engine.
(9) Remove A/C line brackets from the condenser and disconnect A/C lines and plug the openings.
(10) Remove condenser.

INSTALLATION

Add 30 ml (1 fluid oz.) of refrigerant oil to the A/C system if the condenser is replaced.
(1) Install the condenser to radiator and install in vehicle.
(2) Remove the plugs from the openings. Connect the A/C hoses to the condenser.
(3) Install the upper radiator support.
(4) Connect the fan shroud and electric fan to the radiator.
(5) Connect the transmission cooler lines (if equipped with automatic transmission).
(6) Fill coolant system (Refer to cooling for proper procedure).
(7) Evacuate and charge the A/C system.

FILTER DRIER—4.0L ENGINES

REVIEW WARNINGS AND CAUTIONS IN THIS GROUP BEFORE PERFORMING THIS OPERATION.

REMOVAL

(1) Recover refrigerant from A/C system. Disconnect A/C lines from filter drier and plug the openings (Fig. 18).
(2) Unplug the harness from the low pressure switch.
(3) Remove the nut attaching the filter drier to the side sill weld stud.
(4) Remove the filter drier.

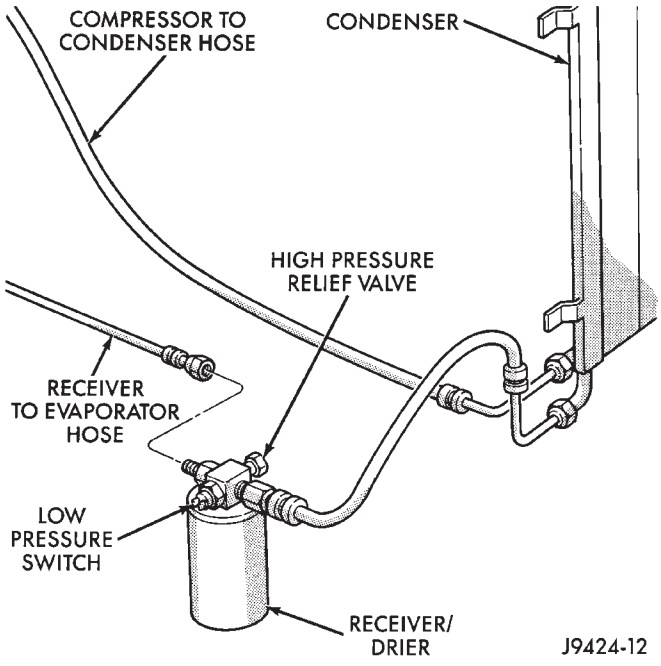

Fig. 18 Condenser and Filter Drier—LHD 4.0L Engine

INSTALLATION

Add 30 ml (1 fluid oz.) of refrigerant oil to the A/C system if the filter drier is replaced.

(1) Install the filter drier.
(2) Install and tighten the nut attaching the filter drier to the side sill weld stud.
(3) Plug the harness to the low pressure switch.
(4) Remove the plugs the openings. Connect the A/C hoses to the receiver dryer.
(5) Evacuate and charge the A/C system.

EVAPORATOR/BLOWER HOUSING

REVIEW WARNINGS AND CAUTIONS IN THIS GROUP BEFORE PERFORMING THIS OPERATION.

REMOVAL

(1) Disconnect negative cable from battery.
(2) Recover refrigerant from A/C system and disconnect A/C lines from the expansion valve.
(3) Disconnect the blower motor wires and the vent tube.
(4) Remove center console. Refer to Group 23 body for procedure.
(5) Remove the lower instrument panel.
(6) Disconnect the electrical connections at the blower motor resistors and cycling clutch switch. Disconnect the vacuum hose at the vacuum motor (Fig. 19).

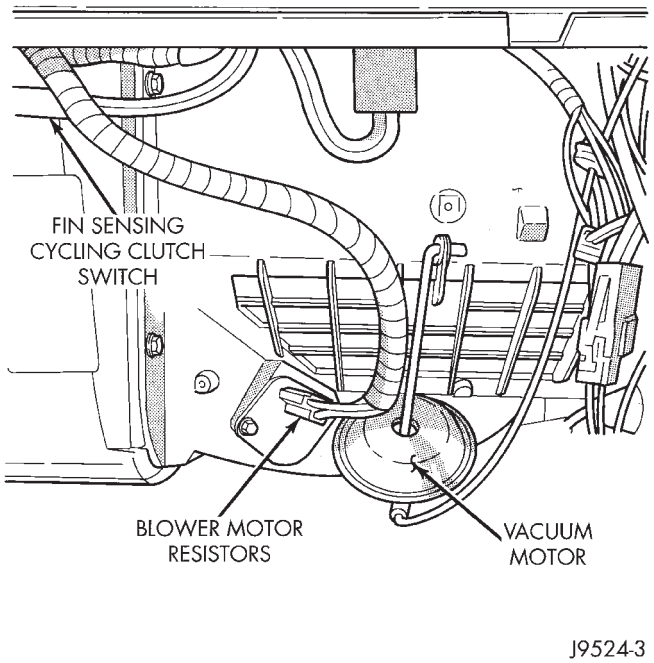

Fig. 19 Evaporator Housing Components

(7) Cut the plastic retaining strap that retains the evaporator/blower housing to the heater core housing (Fig. 20).
(8) Disconnect and remove the heater control cable.
(9) Remove the clip at the rear of the blower housing flange and remove the retaining screws.

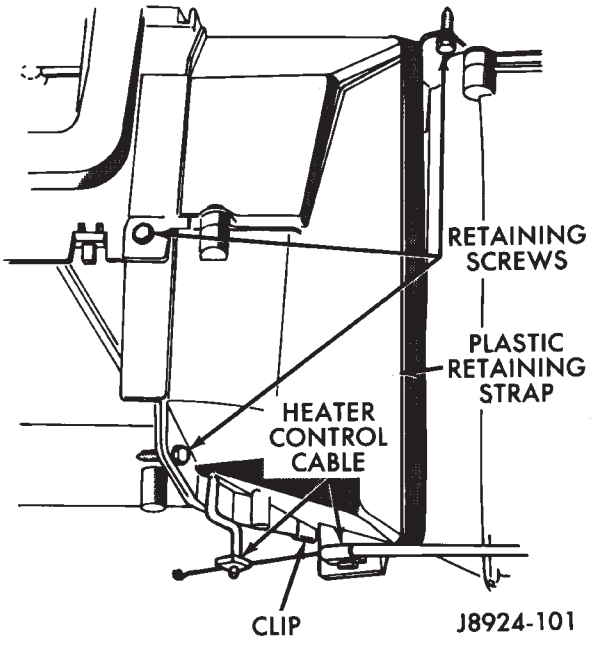

Fig. 20 Evaporator Housing

(10) Remove the housing attaching nuts from engine compartment side of the dash panel (Fig. 21). Remove evaporator drain tube.

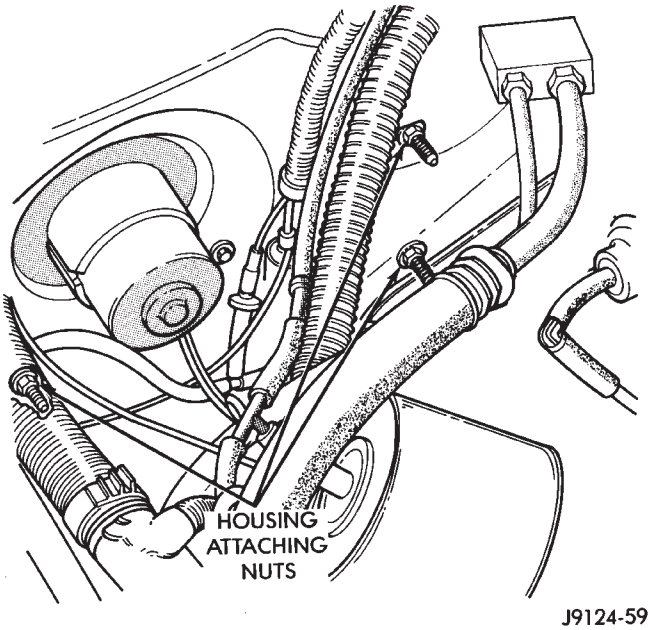

Fig. 21 Evaporator Housing Mounting

(11) Remove right kick panel and remove the instrument panel support bolt.
(12) To disengage housing studs from the dash panel, gently pull out on the right side of the dash. Then rotate housing downward and toward the rear of the vehicle . Remove the evaporator/blower housing.

INSTALLATION

(1) Position evaporator/blower housing into place, being sure to line up the housings using the provided alignment tabs (Figs. 22 and 23).

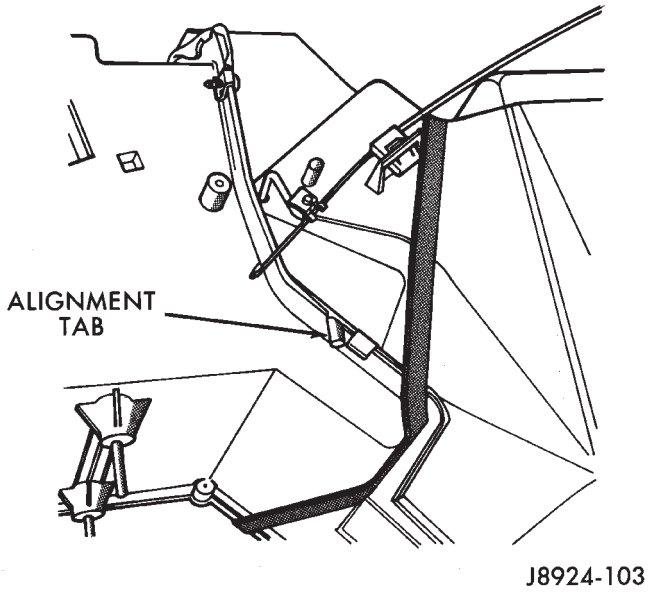

Fig. 22 Evaporator Housing Alignment Tab

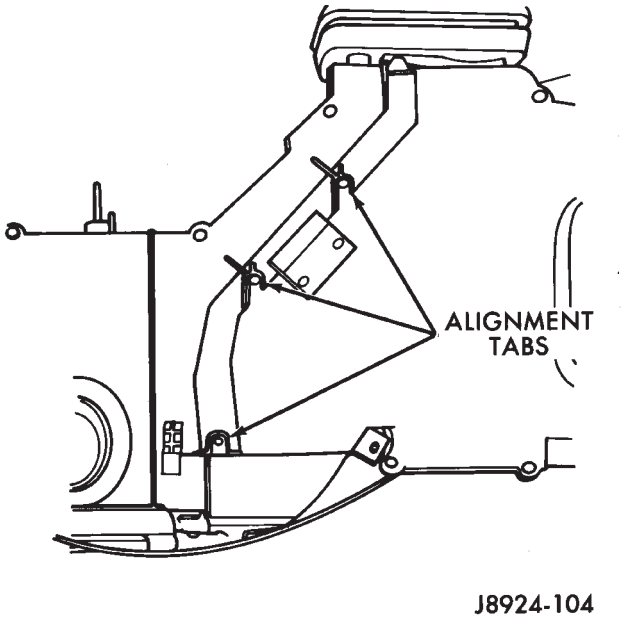

Fig. 23 Evaporator Housing

(2) Install housing retaining screws and rear housing clip.

CAUTION: When installing evaporator/blower housing, DO NOT trap wires between fresh air inlet housing and dash panel.

(3) Install housing retaining nuts on the engine compartment side of the dash panel.
(4) Connect the A/C hoses to the expansion valve and connect the heater blower motor wires.
(5) Attach wire connections at blower motor resistors and cycling clutch switch.
(6) Connect vacuum hose at the vacuum motor and attach heater control cable.
(7) Install instrument panel bolt and kick panel.
(8) Install lower instrument panel.
(9) Install the console.
(10) Connect negative cable to battery.
(11) Evacuate and charge A/C system.
(12) Start the vehicle and check for proper operation at all vacuum motors.

EVAPORATOR COIL

REVIEW WARNINGS AND CAUTIONS IN THIS GROUP BEFORE PERFORMING THIS OPERATION.

REMOVAL

(1) Remove the evaporator/blower housing.
(2) Remove the top housing retaining screws. Remove the top of the evaporator housing (Fig. 24).

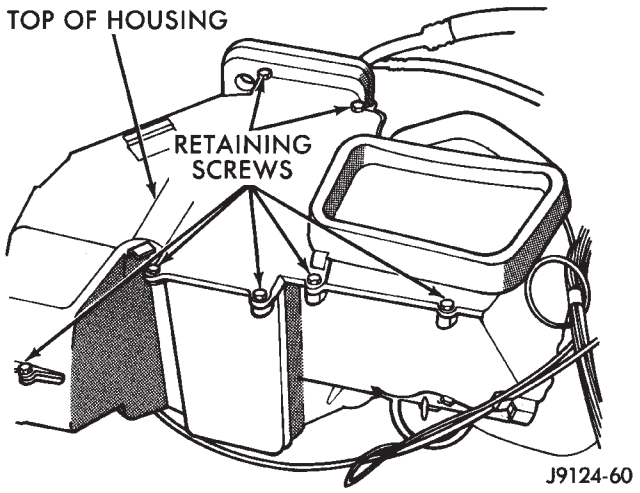

Fig. 24 Top of Housing

(3) Remove the cycling clutch switch from evaporator.
(4) Remove evaporator retaining screws and lift the evaporator out of the housing (Fig. 25).

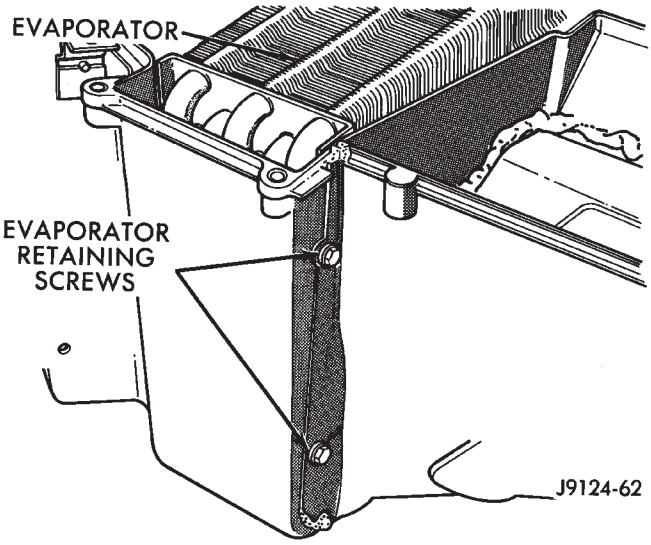

Fig. 25 Evaporator

(5) Remove expansion valve from the evaporator.

INSTALLATION

Add 30 ml (1 fluid oz.) of refrigerant oil to the A/C system if the evaporator is replaced.

(1) Install expansion valve on evaporator.

(2) Position evaporator in the housing. Install and tighten the evaporator retaining screws.

(3) Install cycling clutch switch into evaporator. Install the top of the evaporator housing.

(4) Install the evaporator/blower housing.

(5) Evacuate and charge A/C system as outlined in this section.

EXPANSION VALVE

REVIEW ALL WARNINGS AND CAUTIONS IN THIS GROUP BEFORE PERFORMING THIS OPERATION.

REMOVAL

(1) Recover refrigerant from A/C system.

(2) Remove the coolant bottle and bracket.

(3) Disconnect A/C hoses from the expansion valve (Fig. 26).

(4) Disconnect expansion valve from the evaporator core inlet and outlet tubes. Remove the expansion valve.

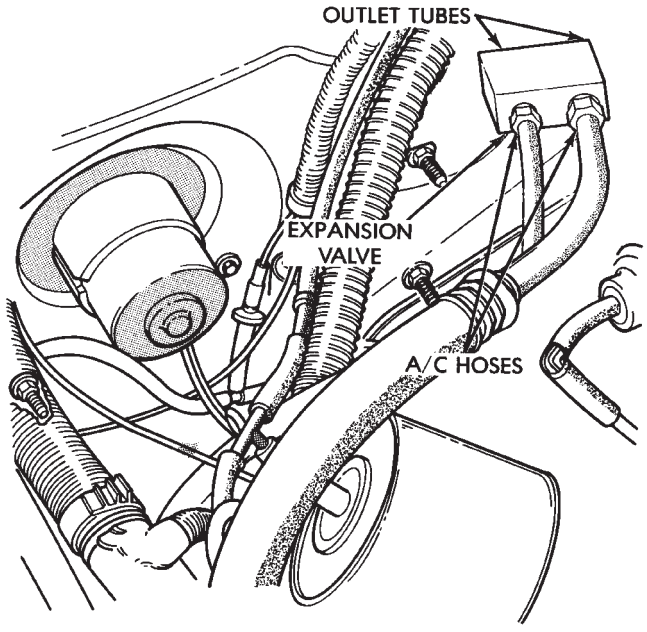

Fig. 26 Expansion Valve

INSTALLATION

(1) Install the expansion valve. Connect the expansion valve to the evaporator core inlet and outlet tubes.

(2) Connect A/C hoses to the expansion valve.

(3) Install the coolant bottle and bracket.

(4) Evacuate and charge A/C system as outlined in this section.

(5) Preform the leak test.

BLOWER MOTOR RESISTORS REPLACEMENT

(1) Remove vacuum motor cover retaining screw and lower the cover.

(2) Remove blower motor resistor connector, remove the resistor retaining screws, and remove resistor.

To install the blower motor resistor reverse the removal procedures.

FIN SENSING CYCLING CLUTCH SWITCH

REMOVAL

(1) Disconnect negative cable from battery.

(2) If equipped with center console remove the console. Refer to Group 23 body for proper procedure.

(3) Remove lower instrument panel.

(4) Pull the rosebud terminal out of the housing (Fig. 27).

(5) Disconnect the electrical connection.

(6) Remove the wires from the retaining clip.

(7) Carefully remove the thermostat cycling clutch switch from the evaporator (Fig. 27).

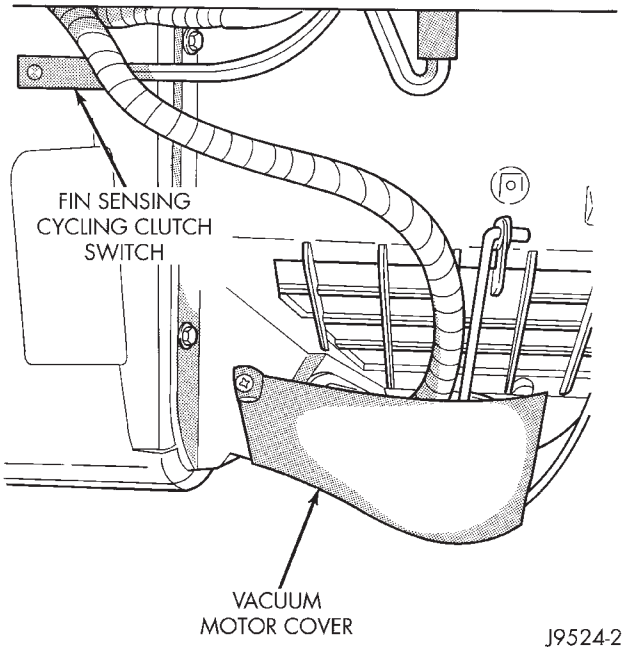

Fig. 27 Fin Sensing Cycling Clutch Switch

INSTALLATION

(1) Carefully install cycling switch.

(2) Connect the electrical connection.

(3) Snap the terminal into the hole in the housing.

(4) Install wiring connections.

(5) Install lower instrument panel.

(6) Install console if equipped.

(7) Install negative battery cable.

COMPONENT SERVICE—YJ VEHICLES

INDEX

	page
A/C Blower Motor	35
A/C Condenser	34
Blower Motor (Heating)	33
Blower Motor/Air Door Motor Switch Replacement	32
Defroster Nozzle and Duct	33
Description	32
Evaporator and Housing	35
Expansion Valve	35
Fresh Air Door Vacuum Motor	34
Fresh Air Intake Duct	34
Heater Control Replacement	32
Heater Core and Housing	33
Receiver-Drier Replacement	35
Temperature Control Thermostat	34
Vent Door Control Cables	32

DESCRIPTION

The air conditioning evaporator housing is mounted to the bottom of instrument panel. The evaporator, blower motor, thermostat, and expansion valve are located in the evaporator housing. The compressor, condenser, receiver-dryer and refrigerant lines are located in the engine compartment.

The heater housing is mounted to the dash panel behind the instrument panel.

HEATER CONTROL REPLACEMENT

(1) Remove instrument cluster bezel attaching screws (Fig. 1).

(2) Remove instrument cluster bezel.

(3) Remove screws attaching the heater control panel to the instrument panel.

(4) Slide control panel outward and disconnect the cables, vacuum hoses and electrical wires from the control panel.

(5) Remove control panel.

To install control panel, reverse the removal procedures.

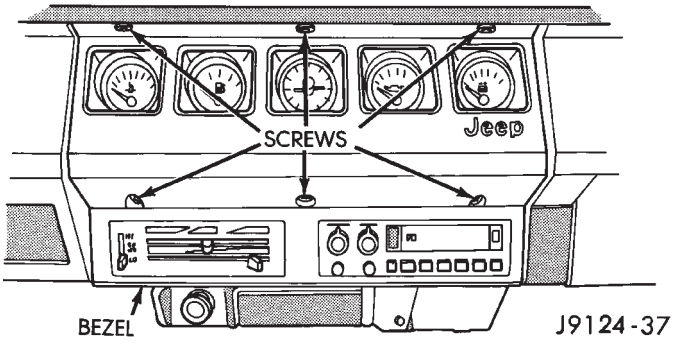

Fig. 1 Instrument Cluster Bezel

BLOWER MOTOR/AIR DOOR MOTOR SWITCH REPLACEMENT

(1) Remove heater control panel (Fig. 2).

(2) Remove air door motor switch.

(3) Remove control knob from the blower switch.

(4) Remove screws that attach the switch to the control panel.

(5) Remove switch from the control panel.

To install switches, reverse the removal procedures.

VENT DOOR CONTROL CABLES

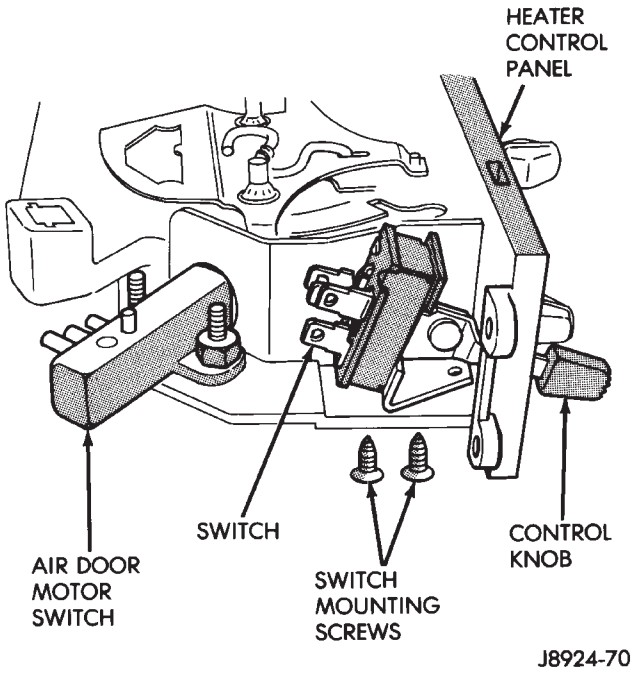

Fig. 2 Control Switches

REMOVAL

(1) Disconnect cable from the vent door.

(2) Disconnect cable from the heater control panel lever. The cables are attached to the control panel levers with plastic tabs. Press the tabs together and lift the cable upward to disengage it from the lever.

(3) Remove the cable. The clip on the cable wire has 2 functions. It attaches the cable to the vent door and is also the self adjusting mechanism. The left cable operates the right cable. The cables must be installed as outlined to maintain the self adjusting feature and ensure proper vent door operation.

INSTALLATION

(1) Install the cables to the heater control panel.
(2) Connect right vent door cable. DO NOT connect the left door cable at this time.
(3) Open and close the right vent door (one time) using the air control lever on the heater control panel.
(4) Connect left vent door cable.
(5) Open and close both vent doors with the air control lever. Verify that both vent doors open at the same time.

HEATER CORE AND HOUSING

REVIEW ALL WARNINGS AND CAUTIONS IN THIS GROUP BEFORE PERFORMING THIS OPERATION.

REMOVAL

(1) Drain coolant from the radiator.
(2) Disconnect heater hoses.
(3) Disconnect vent door cables.
(4) Disconnect blower motor wire.
(5) Disconnect defroster duct.
(6) Remove nuts that attach the heater housing studs to the engine compartment side of the dash panel.
(7) Remove heater housing assembly by tilting it downward, to disengage it from the defroster duct. Pull it rearward and out from under the instrument panel.
(8) Remove heater hosing cover from the housing.
(9) Remove heater core from the housing.

INSTALLATION

(1) Install the heater core into the housing and install the cover on the housing.
(2) Position heater housing on the dash panel. Be sure the housing studs all extend through the dash panel.
(3) Install the seals on the heater core outlet and inlet tubes and over the blower motor housing.
(4) Install attaching nuts on the housing studs.

CAUTION: DO NOT over tighten the attaching nuts. The housing could become distorted causing air leaks and improper heater door operation. Tighten the nuts alternately and evenly until 2 stud threads are visible beyond each nut.

(5) Connect defroster duct to the housing.
(6) Connect blower motor wire.
(7) Connect vent door control cables.
(8) Connect heater hoses.
(9) Fill cooling system.
(10) Check system operation.

BLOWER MOTOR (HEATING)

REMOVAL

(1) Remove heater housing.
(2) Remove blower motor-to-heater housing attaching screws/nuts.
(3) Remove blower motor from the housing.

INSTALLATION

(1) Position blower motor into housing.
(2) Install and tighten blower motor-to-heater housing attaching screws/nuts.
(3) Install heater housing.
(4) Check blower motor and heater operation.

DEFROSTER NOZZLE AND DUCT

REVIEW ALL WARNINGS AND CAUTIONS IN THIS GROUP BEFORE PERFORMING THIS OPERATION.

REMOVAL

(1) Drain coolant from the radiator.
(2) Disconnect heater hoses.
(3) Remove nuts attaching the heater housing studs to the engine compartment side of the dash panel.
(4) Disconnect speedometer cable.
(5) Remove glove box.
(6) Tilt heater housing back and pull it rearward and out from under the instrument panel.
(7) Disconnect vent control cables.
(8) Remove fresh air intake grille from the cowl.
(9) Remove fresh air intake duct.
(10) Lower windshield.
(11) Remove defroster nozzle attaching screws and remove the nozzle and duct.

INSTALLATION

(1) Install defroster nozzle and duct.
(2) Raise and secure the windshield.
(3) Install fresh air intake duct.
(4) Install fresh air intake grille on the cowl.
(5) Install vent cables.
(6) Position heater housing on the dash panel. Be sure all the housing studs extend through the dash panel.
(7) Install seals on the blower motor and heater core inlet and outlet tubes.
(8) Install on the housing studs.

CAUTION: DO NOT over tighten the attaching nuts. The housing could become distorted causing air leaks and improper heater door operation. Tighten the nuts alternately and evenly until 2 stud threads are visible beyond each nut.

(9) Install glove box.
(10) Connect speedometer cable.

(11) Connect the heater hoses.
(12) Fill cooling system.

FRESH AIR DOOR VACUUM MOTOR

REMOVAL

(1) Remove glove box and assist handle.
(2) Disconnect vacuum hose from the motor.
(3) Remove motor lever retaining clip.
(4) Remove motor attaching nuts and remove the motor from the fresh air duct.

INSTALLATION

(1) Position motor on fresh air duct and install the motor attaching nuts.
(2) Align motor lever with the air door lever and install the lever retaining clip.
(3) Connect vacuum hose to the motor.
(4) Install glove box and assist handle.

FRESH AIR INTAKE DUCT

REVIEW WARNINGS AND CAUTIONS IN THIS GROUP BEFORE PERFORMING THIS OPERATION.

REMOVAL

(1) Drain coolant from the radiator.
(2) Disconnect heater hoses.
(3) Remove nuts attaching the heater housing studs to the dash panel from inside the engine compartment.
(4) Disconnect speedometer cable.
(5) Remove glove box and assist handle.
(6) Tilt heater housing back and pull it rearward and out from under the instrument panel.
(7) Disconnect vent cables.
(8) Remove windshield bracket bolts and lower windshield.
(9) Remove fresh air intake grille from the cowl.
(10) Remove fresh air intake duct.

INSTALLATION

(1) Install fresh air intake duct.
(2) Install defroster nozzle and duct.
(3) Raise and secure the windshield.
(4) Install fresh air grille on the cowl.
(5) Install vent cables.
(6) Position heater housing on the dash panel. Be sure all the housing studs extend through the dash panel.
(7) Install seals on the blower motor and heater core inlet and outlet tubes.
(8) Install nuts on the heater housing studs.

CAUTION: DO NOT over tighten the attaching nuts. The housing could become distorted causing air leaks and improper heater door operation. Tighten the nuts alternately and evenly until 2 stud threads are visible beyond each nut.

(9) Install glove box and assist handle.
(10) Connect speedometer cable.
(11) Connect heater hoses.
(12) Fill cooling system.

TEMPERATURE CONTROL THERMOSTAT

REMOVAL

(1) Remove mounting bolts and lower the evaporator housing.
(2) Remove the attaching screws holding the top and bottom housings together.
(3) Separate the housings.
(4) Remove the thermostat.

INSTALLATION

(1) Install temperature control thermostat. Insert thermostat capillary tube into the evaporator coil a minimum of 50 mm (2 inch).

CAUTION: Handle the tube with care to avoid bends or kinks that could cause the thermostat to malfunction.

(2) Assemble the housing and install the attaching screws. DO NOT over tighten the attaching screws.
(3) Install the evaporator housing.

A/C CONDENSER

REVIEW WARNINGS AND CAUTIONS IN THIS GROUP BEFORE PERFORMING THIS OPERATION.

REMOVAL

(1) Recover refrigerant from A/C system.
(2) Drain the radiator.
(3) Remove fan shroud and radiator.
(4) Disconnect A/C line from the condenser.
(5) Remove condenser attaching screws and tilt the bottom of the condenser toward the engine. **Plug all the condenser openings to prevent entry of dirt or moisture.**
(6) Working from under the vehicle, disconnect the receiver-drier to-evaporator hose fitting from the receiver-drier.
(7) Remove condenser and receiver-drier as an assembly.
(8) Remove receiver-drier from the condenser, if necessary.

INSTALLATION

Add 30 ml (1 fluid oz.) of refrigerant oil to the A/C system if the condenser is replaced.
(1) Attach receiver-drier to the condenser.
(2) Install condenser and connect A/C line to the receiver-drier.

(3) Install condenser attaching screws.
(4) Connect condenser A/C line.
(5) Install radiator and fan shroud.
(6) Fill coolant system (Refer to cooling for proper procedure).
(7) Evacuate, charge and leak test the air conditioning system.

RECEIVER-DRIER REPLACEMENT

REVIEW ALL WARNINGS AND CAUTIONS IN THIS GROUP BEFORE PERFORMING THIS OPERATION.

REMOVAL

(1) Recover refrigerant from A/C system.
(2) Disconnect A/C lines from the receiver-drier.
(3) Remove receiver-drier attaching screws and remove receiver-drier.

INSTALLATION

(1) Position receiver-drier in place and install receiver-drier attaching screws.
(2) Connect A/C lines to receiver-drier.
(3) Evacuate, charge and leak test the air conditioning system.

EVAPORATOR AND HOUSING

REVIEW ALL WARNINGS AND CAUTIONS IN THIS GROUP BEFORE PERFORMING THIS OPERATION.

REMOVAL

(1) Recover refrigerant from A/C system.
(2) Disconnect A/C lines.
(3) Remove hose clamps and dash grommet retaining screws.
(4) Remove the evaporator housing-to-instrument panel attaching screws and the housing mounting bracket screw (Fig. 3).

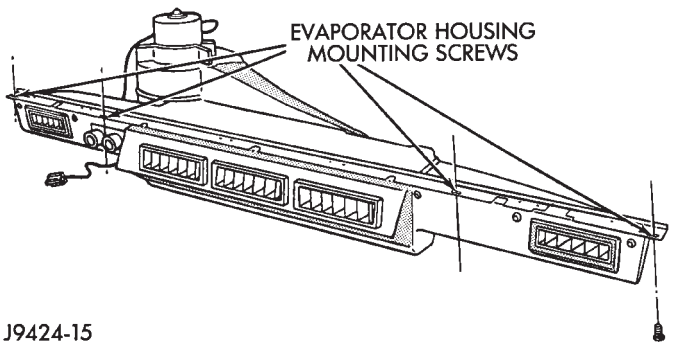

Fig. 3 Evaporator Housing

(5) Lower the evaporator housing and pull the hoses and hose grommet through the dash opening.
(6) Remove upper housing and remove evaporator.

The evaporator core, control switches, expansion valve, blower motor and housing can be serviced after removing evaporator housing (Fig. 4).

INSTALLATION

Add 30 ml (1 fluid oz.) of refrigerant oil to the A/C system if the evaporator is replaced.
(1) Install evaporator into housing and install upper housing.
(2) Push A/C hoses through the grommet openings and install the hose grommet by pushing it toward the engine compartment.
(3) Install hose grommet attaching screws.
(4) Raise evaporator housing and install the evaporator housing-to- instrument panel attaching screws.
(5) Install A/C lines.
(6) Evacuate, charge and leak test the system.

EXPANSION VALVE

REVIEW WARNINGS AND CAUTIONS IN THIS GROUP BEFORE PERFORMING THIS OPERATION.

REMOVAL

(1) Recover refrigerant from A/C system.
(2) Remove evaporator housing
(3) Remove the insulation wrapped around the suction hose fitting, expansion valve and evaporator tubing.
(4) Mark the capillary tube location on the evaporator tubing.
(5) Disconnect inlet and outlet hose fittings, and remove the capillary tube clamp.
(6) Disconnect and remove the expansion valve.

INSTALLATION

(1) Clean evaporator tubing to provide a positive contact with the expansion valve capillary tube.
(2) Install expansion valve.
(3) Clamp the capillary tube at the marked location on the evaporator tubing.
(4) Connect inlet and outlet hose fittings. **The capillary tube must be securely clamped and have positive metal-to-metal contact with the evaporator tubing.**
(5) Wrap expansion valve, inlet hose fitting and capillary tube with insulation.
(6) Install evaporator housing.
(7) Evacuate, charge and leak test the system.

A/C BLOWER MOTOR

It is not necessary to discharge the system to service the blower motor. The evaporator housing need only be lowered for access to the blower motor attaching screws.

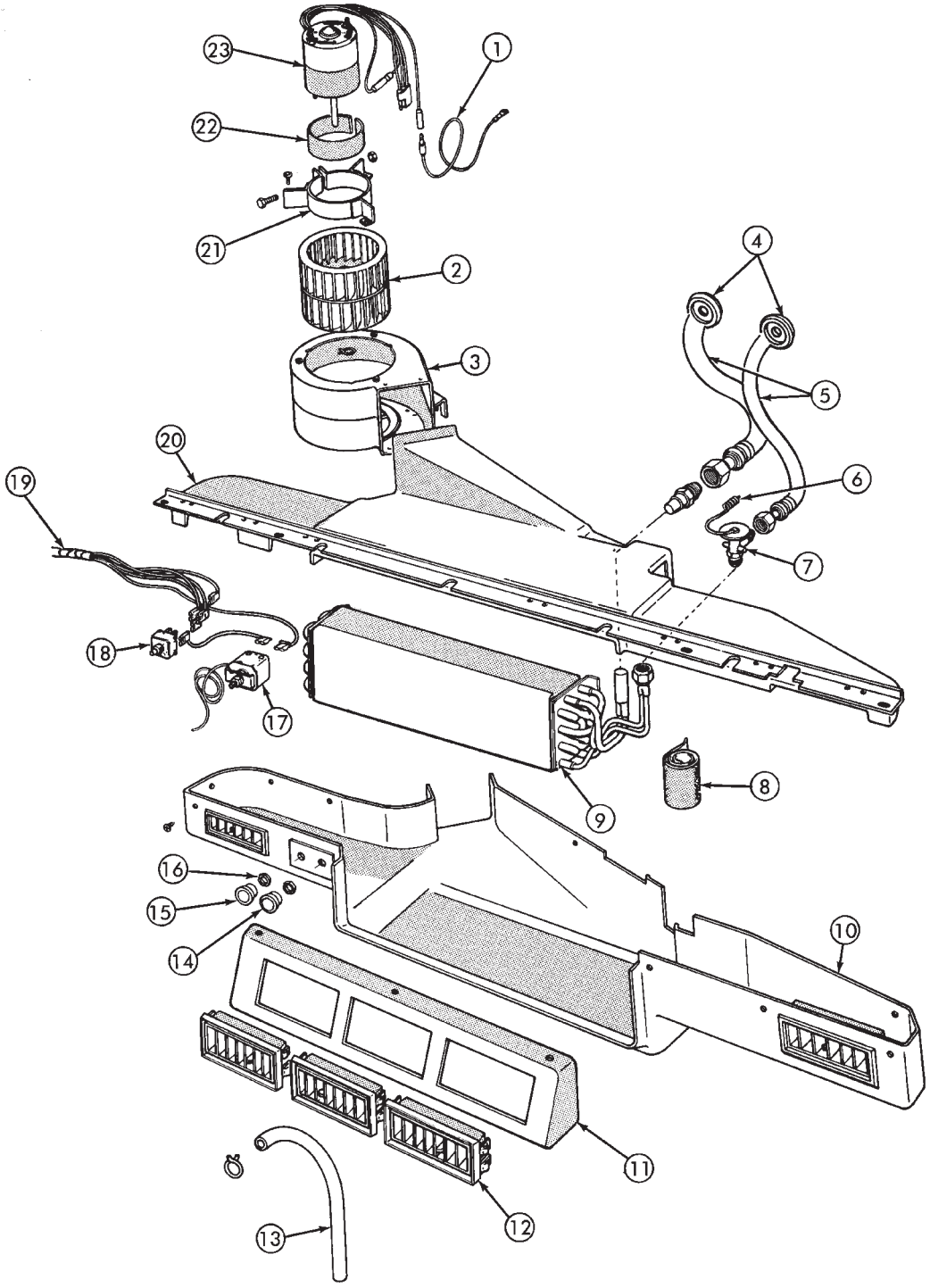

Fig. 4 Evaporative Housing and Components

TORQUE SPECIFICATIONS

AIR CONDITIONING

DESCRIPTION	TORQUE
Compressor	
Mounting Bolts	27 N·m (20 ft. lbs.)
Bracket Bolts	27 N·m (20 ft. lbs.)
Shaft Nut	14.4 N·m (10.5 ft. lbs.)

EMISSION CONTROL SYSTEMS

CONTENTS

	page		page
COMPONENT REMOVAL/INSTALLATION	7	GENERAL INFORMATION	1
EMISSION CONTROLS	4		

GENERAL INFORMATION

INDEX

	page		page
Catalytic Convertor	1	Service Reminder Indicator (SRI) Lamp	1
DRB Scan Tool	2	Vacuum Hose Routing Schematics	2
Exhaust Gas Recirculation (EGR) System	1	Vehicle Emission Control Information (VECI) Label	1

Throughout this group, references are made to particular vehicle models by alphabetical designation (XJ or YJ) or by the particular vehicle nameplate. A chart showing a breakdown of alphabetical designations is included in the Introduction section at the beginning of this manual.

Information on the air cleaner housing and the air cleaner element can be found in Group 14, Fuel Systems.

CATALYTIC CONVERTOR

Refer to Group 11, Exhaust System and Intake Manifold for information.

EXHAUST GAS RECIRCULATION (EGR) SYSTEM

An EGR system is not used with the 2.5L 4 cylinder or the 4.0L 6 cylinder engine on any XJ or YJ model.

SERVICE REMINDER INDICATOR (SRI) LAMP

The instrument panel mounted SRI lamp was formerly referred to as the emission maintenance reminder (EMR) lamp. It is **not used** on any XJ or YJ model for the 1995 model year.

VEHICLE EMISSION CONTROL INFORMATION (VECI) LABEL

All vehicles are equipped with a combined VECI label. The label is located in the engine compartment (Figs. 1 or 2). The label contains the following:

- Engine family and displacement
- Evaporative family
- Emission control system schematic
- Certification application
- Engine timing specifications (if adjustable)
- Idle speeds (if adjustable)
- Spark plug and plug gap

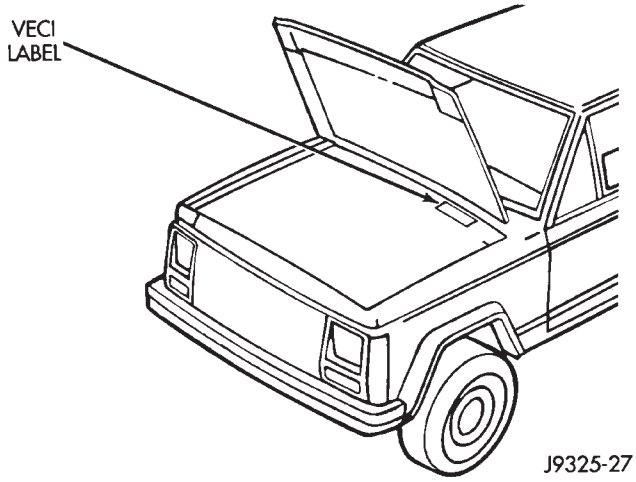

Fig. 1 VECI Label Location—XJ Models

The label also contains an engine vacuum schematic. There are unique labels for vehicles built for sale in the state of California and the country of Canada. Canadian labels are written in both the English and French languages. These labels are permanently attached and cannot be removed without defacing information and destroying label.

The VECI label illustration (Fig. 3) is used as an example only. Refer to the VECI label located in the engine compartment (Figs. 1 or 2) for actual emission information.

VACUUM HOSE ROUTING SCHEMATICS

The vacuum hose routing schematics are used as examples only. If there are any differences between these schematics and the Vehicle Emission Control Information (VECI) label schematics, those shown on the VECI label should be used.

DRB SCAN TOOL

For operation of the DRB scan tool, refer to the appropriate Powertrain Diagnostic Procedures service manual.

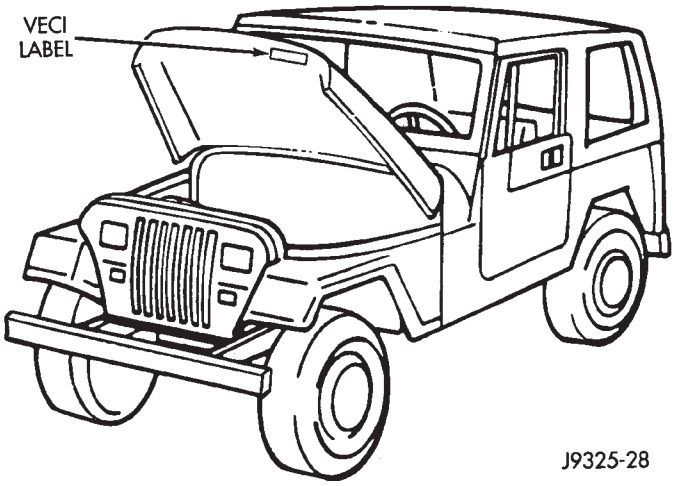

Fig. 2 VECI Label Location—YJ Models

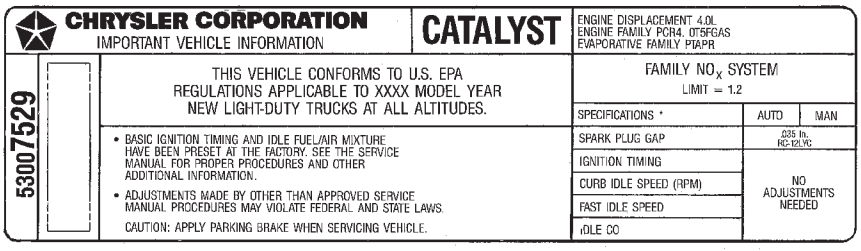

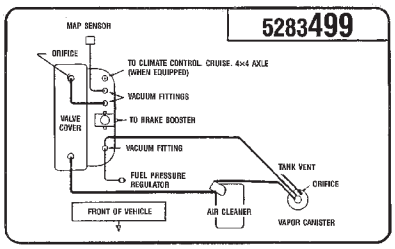

J9525-12

Fig. 3 VECI Label—Typical

VACUUM ROUTING SCHEMATIC—2.5L 4 CYLINDER ENGINE

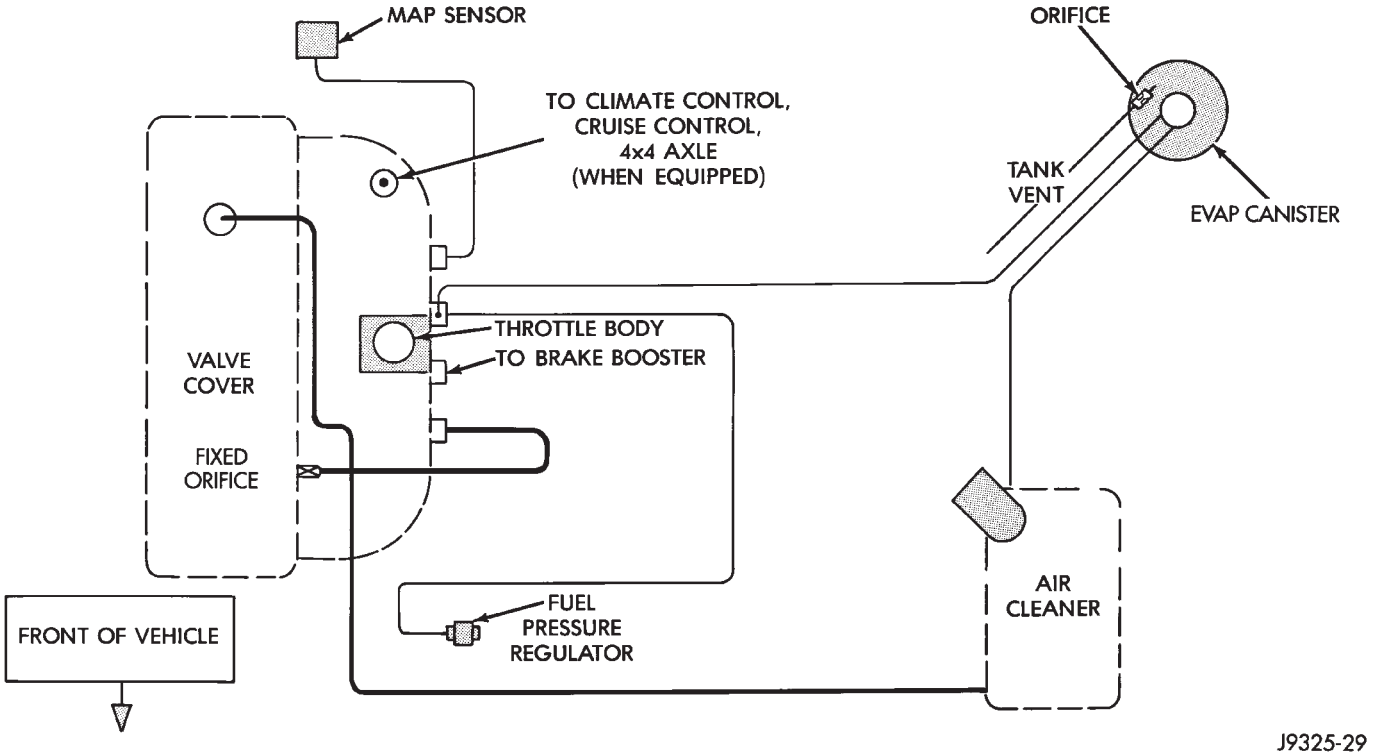

VACUUM ROUTING SCHEMATIC—4.0L 6 CYLINDER ENGINE

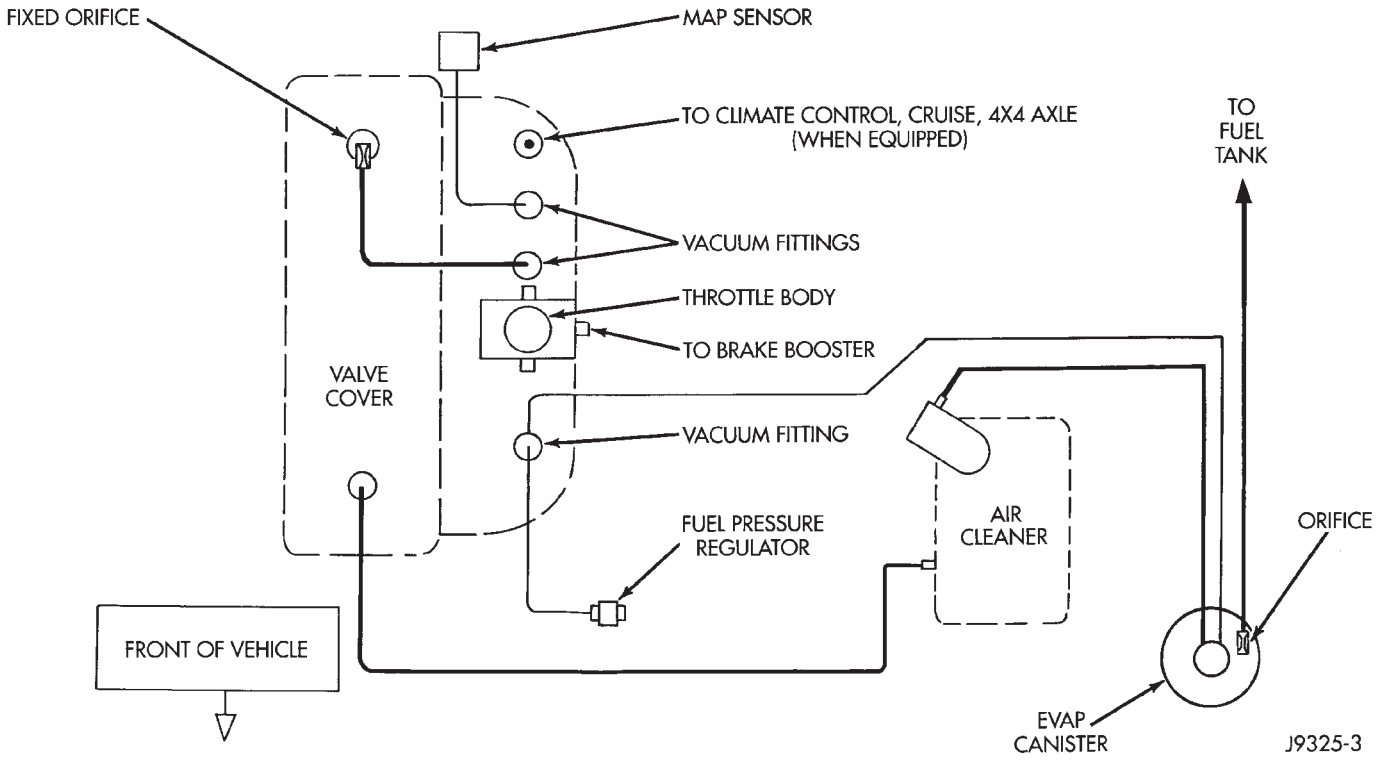

EMISSION CONTROLS

INDEX

	page
Crankcase Ventilation System	5
EVAP (Evaporation) Control System	4
EVAP Canister	4
Fuel Tank Filler Tube Cap	4
Oxygen (O2S) Sensor	6
Pressure Relief/Rollover Valve	6

EVAP (EVAPORATION) CONTROL SYSTEM

GENERAL INFORMATION

The function of the EVAP control system is to prevent the emissions of gasoline vapors from the fuel tank into the atmosphere. When fuel evaporates in the fuel tank, the vapors pass through vent hoses or tubes to a carbon filled EVAP canister. They are temporarily held in the canister until they can be drawn into the intake manifold when the engine is running.

The EVAP canister is a feature on all models for the storage of fuel vapors from the fuel tank.

The hoses used in this system are specially manufactured. If replacement becomes necessary, it is important to use only fuel resistant hose.

EVAP CANISTER

A sealed, maintenance free, EVAP canister is used on all vehicles. On XJ models, the EVAP canister is located in the engine compartment on the passenger side frame rail (Fig. 4). On YJ models, the EVAP canister is located in the engine compartment on the dash panel and below the brake master cylinder (Fig. 5). The EVAP canister is filled with granules of an activated carbon mixture. Fuel vapors entering the EVAP canister are absorbed by the charcoal granules.

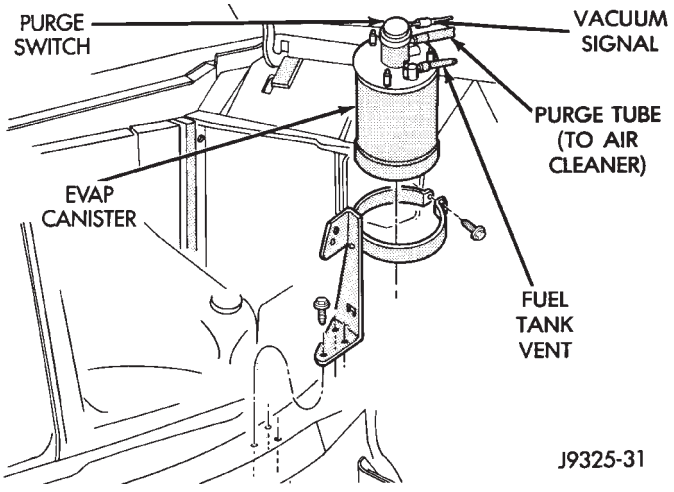

Fig. 4 EVAP Canister Location—XJ Models

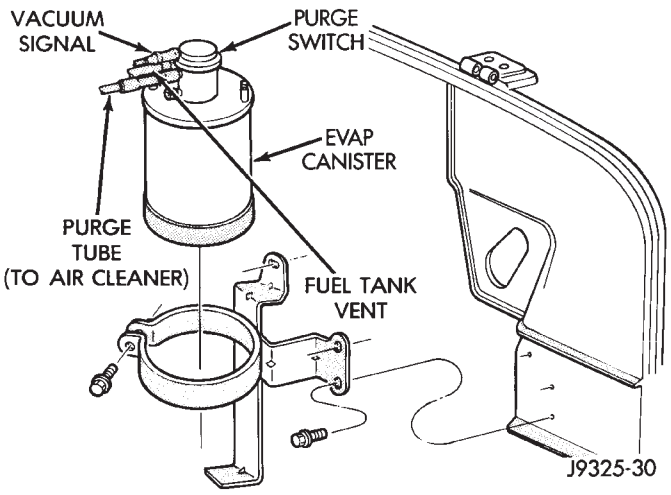

Fig. 5 EVAP Canister Location—YJ Models

CANISTER OPERATION

Vacuum is used to control and operate the EVAP canister. No electrical circuitry is used to control or operate the EVAP system.

The EVAP canister is equipped with a vacuum controlled purge shutoff switch (orifice) (Figs. 4 or 5) that controls canister purge operation. The switch is open when manifold vacuum is applied to it. When the engine is operating, the EVAP canister purge function draws fresh air through the top of the canister. This causes the stored vapors to be drawn out of the canister and into the airstream in the air cleaner snorkel (Fig. 6).

The air cleaner contains a venturi in the air cleaner cover used as a purge line vacuum source (Fig. 6). The venturi effect increases the speed of the intake air flowing by the slots in the venturi wall. This creates a low pressure area around the slots. When the purge shutoff switch is open, vapors from the canister are drawn through slots and into the airstream flowing through the venturi (Fig. 7). The vapors pass through the intake manifold into the engine combustion chambers where they are consumed during engine combustion.

FUEL TANK FILLER TUBE CAP

The fuel tank filler tube cap (fuel tank cap) incorporates a two-way pressure/relief valve that is closed to atmosphere during normal operating conditions.

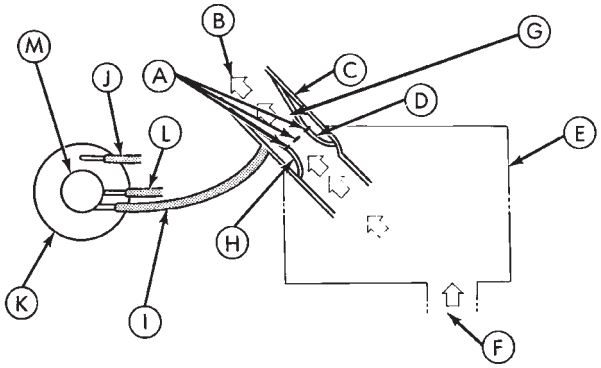

Fig. 6 EVAP System—Typical

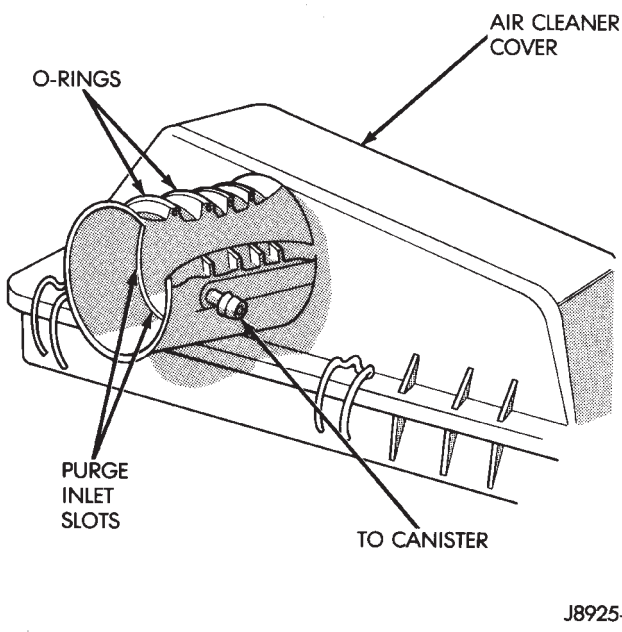

Fig. 7 Air Cleaner Venturi—Typical

The relief valve used in fuel filler caps of all models is calibrated at a pressure of 10 kPa (1.5 psi) or a vacuum of 6 kPa (1.8 in. Hg). When the pressure or vacuum is relieved, the valve returns to the normally closed position.

CAUTION: The fuel filler cap must be removed prior to disconnecting any fuel system component.

CRANKCASE VENTILATION SYSTEM

All 2.5L 4 cylinder and 4.0L 6 cylinder engines are equipped with a Crankcase Ventilation (CCV) system (Figs. 8 or 9). The CCV system performs the same function as a conventional PCV system, but does not use a vacuum controlled valve.

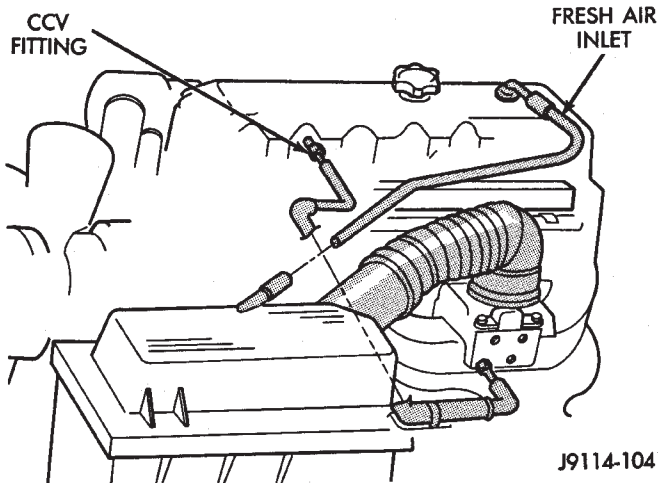

Fig. 8 CCV System—2.5L Engine—Typical

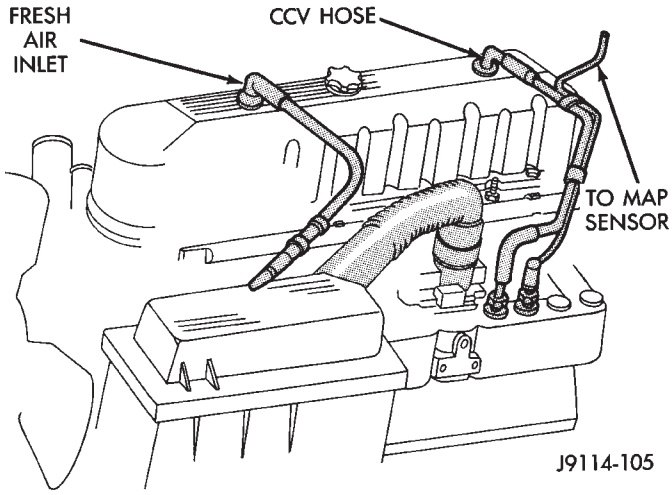

Fig. 9 CCV System—4.0L Engine—Typical

On 4.0L 6 cylinder engines, a molded vacuum tube connects manifold vacuum to top of cylinder head (valve) cover at dash panel end. The vacuum tube contains a fixed orifice of a calibrated size. It meters the amount of crankcase vapors drawn out of the engine.

On 2.5L 4 cylinder engines, a fitting on drivers side of cylinder head (valve) cover contains the metered orifice. It is connected to manifold vacuum.

A fresh air supply hose from the air cleaner is connected to front of cylinder head cover on 4.0L engines. It is connected to rear of cover on 2.5L engines.

When the engine is operating, fresh air enters the engine and mixes with crankcase vapors. Manifold vacuum draws the vapor/air mixture through the fixed orifice and into the intake manifold. The vapors are then consumed during combustion.

PRESSURE RELIEF/ROLLOVER VALVE

All vehicles are equipped with a combination fuel tank pressure relief and rollover valve (Fig. 10). This dual function valve will relieve fuel tank pressure and also prevent fuel flow through the fuel tank vent hoses in the event of an accidental vehicle rollover.

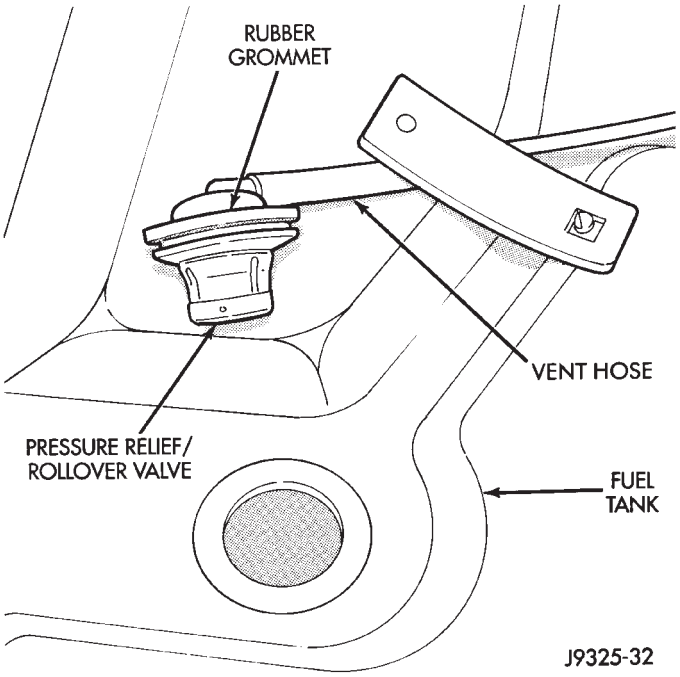

Fig. 10 Pressure Relief/Rollover Valve Location—Typical

The valve incorporates a pressure relief mechanism (Fig. 11) that releases fuel tank pressure when the pressure increases above the calibrated sealing value. Refer to the Fuel Tank section of Group 14, Fuel Systems for removal and installation procedures.

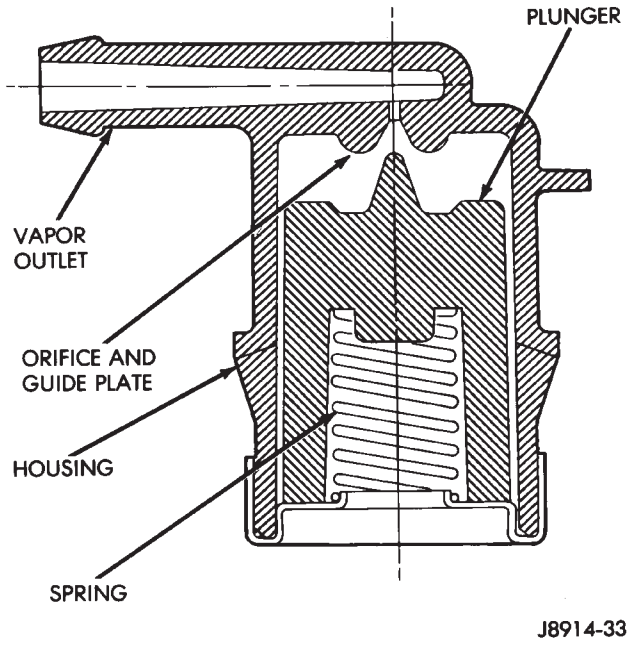

Fig. 11 Typical Pressure Relief/Rollover Valve Operation

OXYGEN (O2S) SENSOR

For description, operation, diagnosis and removal/installation procedures of the O2S sensor, refer to Group 14, Fuel Systems.

COMPONENT REMOVAL/INSTALLATION

INDEX

page

Air Cleaner Element 7
Coolant Temperature Sensor 7
EVAP Canister 7
Fuel Tank Filler Tube Cap 7
Oxygen (O2S) Sensor 7
Powertrain Control Module (PCM) 7
Pressure Relief/Rollover Valve 7

AIR CLEANER ELEMENT

For removal and installation procedures of both the air cleaner housing and the air cleaner element, refer to the Group 14, Fuel System.

COOLANT TEMPERATURE SENSOR

For description, operation, diagnosis and removal/installation procedures of the engine coolant temperature sensor, refer to Group 14, Fuel Systems.

EVAP CANISTER

On XJ models, the EVAP canister is located in the engine compartment on the passenger side frame rail (Fig. 1). On YJ models, the EVAP canister is located in the engine compartment on the dash panel and below the brake master cylinder (Fig. 2).

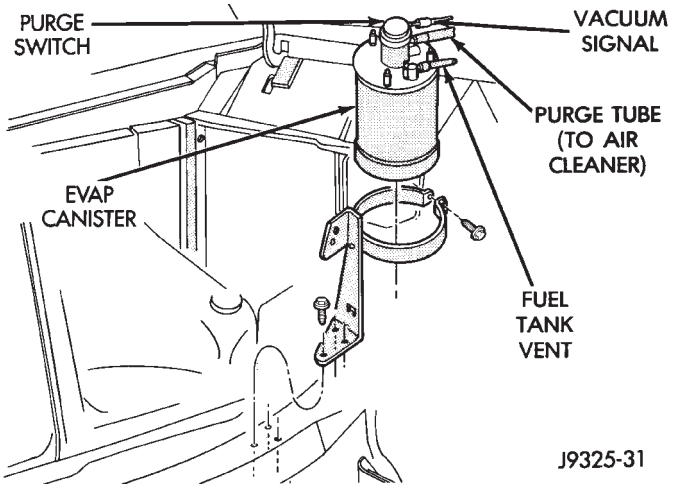

Fig. 1 EVAP Canister—XJ Models

REMOVAL/INSTALLATION

(1) Disconnect the vacuum lines at the EVAP canister. Note location of lines before removal.

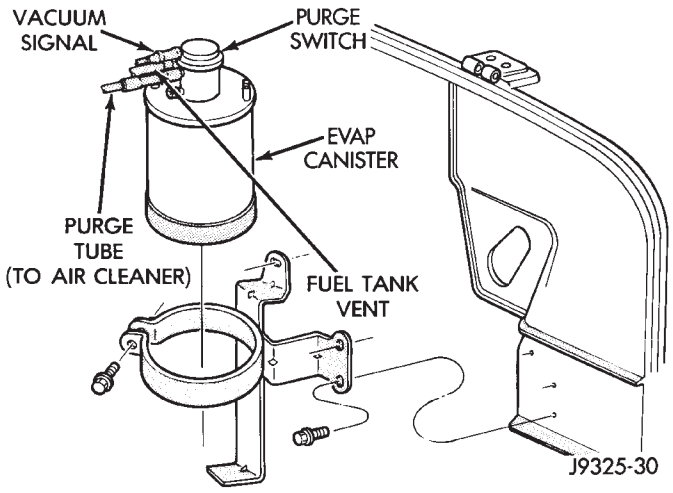

Fig. 2 EVAP Canister—YJ Models

(2) Remove canister retaining strap bolt.
(3) Remove canister from vehicle.

Reverse the procedure for installation.

FUEL TANK FILLER TUBE CAP

If replacement of the fuel filler tube cap (fuel tank cap) is necessary, it must be replaced with an **identical cap** to be sure of correct system operation.

OXYGEN (O2S) SENSOR

For description, operation, diagnosis and removal/installation procedures of the O2S sensor, refer to Group 14, Fuel Systems.

POWERTRAIN CONTROL MODULE (PCM)

For removal and installation procedures, refer to Group 14, Fuel Systems.

PRESSURE RELIEF/ROLLOVER VALVE

For removal and installation procedures, refer to the Fuel Tank section of Group 14, Fuel Systems.

Description	Group-Page
- XJ, ANTENNA REMOVE/INSTALL	8F-8
- XJ, GENERAL INFORMATION	8K-1
- XJ, MULTI-FUNCTION SWITCH	8J-4
- XJ, MULTI-FUNCTION SWITCH REMOVE/INSTALL	8J-5
- XJ, RADIO REMOVE/INSTALL	8F-6
- XJ, SOUND BAR REMOVE/INSTALL	8F-8
- XJ, SPEAKERS REMOVE/INSTALL	8F-6
- XJ, TURN SIGNAL/HAZARD WARNING SYSTEM	8J-3
- YJ, ANTENNA REMOVE/INSTALL	8F-10
- YJ, BUZZER MODULE SCHEMATIC	8U-4
- YJ, GENERAL INFORMATION	8K-10
- YJ, HAZARD WARNING SYSTEM	8J-4
- YJ, RADIO REMOVE/INSTALL	8F-9
- YJ, SERVICE PROCEDURES	8K-17
- YJ, SOUND BAR REMOVE/INSTALL	8F-10
- YJ, SPEAKERS REMOVE/INSTALL	8F-9
- YJ, TURN SIGNAL SYSTEM	8J-3
- YJ, TURN SIGNAL/HAZARD WARNING SWITCH REMOVE/INSTALL	8J-5
30RH/32RH AUTOMATIC TRANSMISSION	21-67
30RH/32RH GENERAL SPECIFICATIONS	21-335
30RH/32RH IN-VEHICLE SERVICE	21-99
30RH/32RH PRESSURE TEST SPECIFICATIONS	21-336
30RH/32RH TORQUE SPECIFICATIONS	21-336
30RH/32RH TRANSMISSION DIAGNOSIS	21-70
30RH/32RH TRANSMISSION OVERHAUL	21-119
30RH/32RH TRANSMISSION REMOVAL AND INSTALLATION	21-115
4-CYLINDER ENGINE, ENGINE FIRING ORDER—2.5L	8D-32
60-WAY CONNECTOR, POWERTRAIN CONTROL MODULE (PCM)	14-40
6-CYLINDER ENGINE, AUXILIARY ELECTRIC COOLING FAN—XJ MODELS WITH 4.0L	7-35
6-CYLINDER ENGINE, ENGINE FIRING ORDER—4.0L	8D-32
ABS BRAKE DIAGNOSIS	5-3
ABS COMPONENT SERVICEABILITY	5-37
ABS DIAGNOSTIC CONNECTOR	5-35,5-3
ABS OPERATION AND SERVICE	5-33
ABS POWER RELAY; ANTI-LOCK BRAKES (XJ)	8W-32-1
ABS POWER RELAY; ANTI-LOCK BRAKES (XJ-RHD)	8W-32-1
ABS POWER RELAY; ANTI-LOCK BRAKES (YJ)	8W-32-1
ABS PUMP MOTOR RELAY; ANTI-LOCK BRAKES (XJ)	8W-32-1
ABS PUMP MOTOR RELAY; ANTI-LOCK BRAKES (XJ-RHD)	8W-32-1
ABS PUMP MOTOR RELAY; ANTI-LOCK BRAKES (YJ)	8W-32-1
ABS SYSTEM POWER-UP AND INITIALIZATION	5-35
ABS WARNING LAMP; ANTI-LOCK BRAKES (XJ)	8W-32-2
ABS WARNING LAMP; ANTI-LOCK BRAKES (XJ-RHD)	8W-32-2
ABS WARNING LAMP; ANTI-LOCK BRAKES (YJ)	8W-32-2
ABS WARNING LAMP; INSTRUMENT CLUSTER (XJ)	8W-40-2
ABS WARNING LAMP; INSTRUMENT CLUSTER (XJ-RHD)	8W-40-2
ABS WARNING LAMP; INSTRUMENT CLUSTER (YJ)	8W-40-2
ABS WARNING LIGHT DISPLAY	5-3
ABSOLUTE PRESSURE (MAP) SENSOR, MANIFOLD; FUEL SYSTEM	14-63
ABSOLUTE PRESSURE (MAP) SENSOR, MANIFOLD; FUEL/IGNITION (YJ)	8W-30-4
ABSOLUTE PRESSURE (MAP) SENSOR, MANIFOLD; IGNITION SYSTEMS	8D-23,8D-5
ABSOLUTE PRESSURE (MAP) SENSOR TEST, MANIFOLD; FUEL SYSTEM	14-47
ABSOLUTE PRESSURE (MAP) SENSOR TEST, MANIFOLD; IGNITION SYSTEMS	8D-11
ABSOLUTE PRESSURE (MAP) SENSOR—PCM INPUT, MANIFOLD	14-23
ABSOLUTE PRESSURE SENSOR, MANIFOLD; FUEL/IGNITION (XJ)	8W-30-4
ABSOLUTE PRESSURE SENSOR, MANIFOLD; FUEL/IGNITION (XJ-RHD)	8W-30-4
ABSORBER, SHOCK; FRONT SUSPENSION AND AXLE	2-13,2-16
ABSORBER, SHOCK; REAR SUSPENSION AND AXLES	3-4,3-7
A/C BLOWER MOTOR	24-35
A/C COMPONENTS	24-4
A/C COMPRESSOR; AIR CONDITIONING/ HEATER (YJ)	8W-42-2
A/C COMPRESSOR CLUTCH	24-15
A/C COMPRESSOR CLUTCH RELAY	24-15,24-16
A/C CONDENSER	24-34
A/C CONTROL REPLACEMENT, HEATER	24-23
A/C OPERATION, HEATER	24-1
A/C RECIRCULATING DOOR VACUUM MOTOR REPLACEMENT	24-27
ACCELERATION SWITCH; ANTI-LOCK BRAKES (XJ)	8W-32-1
ACCELERATION SWITCH; ANTI-LOCK BRAKES (XJ-RHD)	8W-32-1
ACCELERATION SWITCH; ANTI-LOCK BRAKES (YJ)	8W-32-1
ACCELERATION SWITCH; BRAKES	5-35
ACCELERATION SWITCH INSTALLATION	5-39
ACCELERATION SWITCH OPERATION	5-37
ACCELERATION SWITCH REMOVAL	5-39
ACCELERATOR PEDAL	14-17
ACCELERATOR PEDAL AND THROTTLE CABLE	14-17,14-58
ACCESSORY DRIVE BELT	0-21
ACCESSORY DRIVE BELTS, ENGINE	7-38
ACCESSORY LAMP AND HEATER CONTROL PANEL LAMP; INTERIOR LIGHTING (YJ)	8W-44-1
ACCUMULATOR PISTONS AND SPRINGS	21-189
A/C-HEATER BLOWER MOTOR; AIR CONDITIONING/HEATER (YJ)	8W-42-2
A/C-HEATER SYSTEM; AIR CONDITIONING/HEATER (XJ)	8W-42-1
A/C-HEATER SYSTEM; AIR CONDITIONING/HEATER (XJ-RHD)	8W-42-1
ADD-A-TRUNK—YJ	23-157
ADJUSTER/MOTORS, POWER SEAT	8R-1,8R-2
ADJUSTER/MOTORS REMOVE/INSTALL, POWER SEAT	8R-3
ADJUSTMENT, BRAKELIGHT SWITCH	5-32
ADJUSTMENT, COMPASS VARIATION	8C-5
ADJUSTMENT, DIFFERENTIAL SHIM PACK MEASUREMENT	2-43
ADJUSTMENT, DRUM BRAKE	5-57
ADJUSTMENT, FRONT BAND	21-102
ADJUSTMENT, GEARSHIFT CABLE/ LINKAGE	21-71
ADJUSTMENT, PARK INTERLOCK CABLE	21-195
ADJUSTMENT PROCEDURES, TRANSMISSION ASSEMBLY	21-155
ADJUSTMENT, REAR WHEEL SENSOR INSTALLATION	5-38
ADJUSTMENT, SHIFT CABLE	21-195
ADJUSTMENT, SHIFT LINKAGE	21-286,21-309
ADJUSTMENT, TRANSMISSION THROTTLE CABLE	21-194
ADJUSTMENT, TRANSMISSION THROTTLE VALVE CABLE	21-71
ADJUSTMENT, VALVE BODY ASSEMBLY	21-153
ADJUSTMENT (XJ), PARK INTERLOCK CABLE	21-101
ADJUSTMENT (XJ), SHIFT CABLE	21-100
ADJUSTMENT (XJ/YJ), PARKING BRAKE CABLE TENSIONER	5-69
ADJUSTMENT (XJ/YJ), THROTTLE VALVE CABLE	21-101
ADJUSTMENT (YJ), SHIFT LINKAGE	21-100
ADJUSTMENT—MAJOR, DOOR ALIGNMENT	23-41
ADJUSTMENT—MINOR, DOOR ALIGNMENT	23-37
ADJUSTMENT—XJ, DOOR LATCH	23-48
ADJUSTMENT—XJ, HOOD	23-10
ADJUSTMENT—XJ, LIFTGATE	23-63
ADJUSTMENT—YJ, TAILGATE	23-121
ADJUSTMENTS, ALIGNMENT MEASUREMENTS	2-8
ADJUSTMENTS, STEERING GEAR	19-24
AFTERMARKET PAINT AND TRIM REPAIR PRODUCTS—XJ	23-159
AFTERMARKET PAINT AND TRIM REPAIR PRODUCTS—YJ	23-160
AIR CLEANER	14-29
AIR CLEANER ELEMENT; EMISSION CONTROL SYSTEMS	25-7
AIR CLEANER ELEMENT; FUEL SYSTEM	14-59
AIR CLEANER ELEMENT; LUBRICATION AND MAINTENANCE	0-18
AIR CLEANER HOUSING	14-58
AIR CONDITIONING	24-37
AIR CONDITIONING (A/C) CLUTCH RELAY	14-58
AIR CONDITIONING (A/C) CLUTCH RELAY—PCM OUTPUT	14-26
AIR CONDITIONING (A/C) CONTROLS—PCM INPUT	14-21
AIR CONDITIONING CONTROLS—XJ VEHICLES	24-15
AIR CONDITIONING CONTROLS—YJ VEHICLES	24-16
AIR CONDITIONING, HEATER; AIR CONDITIONING/HEATER (YJ)	8W-42-2
AIR CONDITIONING OPERATION; AIR CONDITIONING/HEATER (XJ)	8W-42-2
AIR CONDITIONING OPERATION; AIR CONDITIONING/HEATER (XJ-RHD)	8W-42-2
AIR CONDITIONING PERFORMANCE TESTS	24-12
AIR CONDITIONING SCHEMATIC—XJ	24-5
AIR CONDITIONING TEST PROCEDURES, HEATING	24-15
AIR CONTROL (IAC) MOTOR, IDLE; FUEL SYSTEM	14-62
AIR CONTROL (IAC) MOTOR, IDLE; FUEL/IGNITION (XJ)	8W-30-2
AIR CONTROL (IAC) MOTOR, IDLE; FUEL/IGNITION (YJ)	8W-30-2
AIR CONTROL (IAC) MOTOR, IDLE; FUEL/IGNITION (XJ-RHD)	8W-30-2
AIR CONTROL (IAC) MOTOR—PCM OUTPUT, IDLE	14-27
AIR CONTROL MOTOR TEST, IDLE	14-49
AIR DEFLECTOR—XJ, COWL WEATHERSTRIP SEAL/CROSSMEMBER	23-11
AIR DOOR VACUUM MOTOR, FRESH	24-34
AIR EXHAUST GRILLE—XJ	23-25
AIR GAP, SPEED SENSOR	5-37
AIR INTAKE DUCT, FRESH	24-34
AIR PRESSURE TEST	21-74
AIR TEMPERATURE SENSOR, INTAKE; FUEL/IGNITION (XJ)	8W-30-4
AIR TEMPERATURE SENSOR, INTAKE; FUEL/IGNITION (YJ)	8W-30-4
AIR TEMPERATURE SENSOR, INTAKE; FUEL/IGNITION (XJ-RHD)	8W-30-4
AIR TEMPERATURE SENSOR, INTAKE MANIFOLD; FUEL SYSTEM	14-60
AIR TEMPERATURE SENSOR, INTAKE MANIFOLD; IGNITION SYSTEMS	8D-23,8D-5
AIR TEMPERATURE, SENSOR RESISTANCE (OHMS)—COOLANT TEMPERATURE SENSOR/MANIFOLD	14-46
AIR TEMPERATURE SENSOR TEST, INTAKE MANIFOLD; FUEL SYSTEM	14-46
AIR TEMPERATURE SENSOR TEST, INTAKE MANIFOLD; IGNITION SYSTEMS	8D-11
AIR TEMPERATURE SENSOR—PCM INPUT, INTAKE MANIFOLD	14-22
AIRBAG MODULE	8M-1
AIRBAG MODULE HANDLING	8M-2
AIRBAG MODULE REMOVE/INSTALL	8M-3
AIRBAG MODULE REMOVE—INSTALL	19-49
AIRBAG SYSTEM; RESTRAINT SYSTEMS	8M-1
AIRBAG SYSTEM; STEERING	19-47
AIRBAG SYSTEM SERVICE (DEPLOYED)	8M-2
AIR-CONDITIONER COMPRESSOR	0-21
ALIGNMENT ADJUSTMENT—MAJOR, DOOR	23-41
ALIGNMENT ADJUSTMENT—MINOR, DOOR	23-37
ALIGNMENT, FRONT WHEEL	2-5
ALIGNMENT—XJ, HEADLAMP	8L-6
ALIGNMENT—YJ, HEADLAMP	8L-22
ALIGNMENT—YJ, HOOD	23-107
ANCHOR AND BUMPER—XJ, LIFTGATE LICENSE PLATE SCREW	23-65
ANGLE, GROUND CLEARANCE AND RAMP	0-11
ANGLE MEASUREMENT, UNIVERSAL JOINT	16-4

Description	Group-Page
ANTENNA	8F-2,8F-5
ANTENNA, POWER; RADIO (XJ-RHD)	8W-47-1
ANTENNA REMOVE/INSTALL - XJ	8F-8
ANTENNA REMOVE/INSTALL - YJ	8F-10
ANTILOCK BRAKES (ABS)	5-1
ANTILOCK BRAKING MODE, ABS OPERATION IN	5-36
ANTILOCK ECU AND HCU DIAGNOSIS	5-3
APPLICATION CHARTS, GEARTRAIN OPERATION	21-169
APPLICATION, TRANSMISSION	21-67
APPLICATION—XJ VEHICLES, BULB	8L-18
APPLICATION—YJ VEHICLES, BULB	8L-32
APPLIQUE—XJ, QUARTER WINDOW	23-25
APPLIQUE—YJ, RADIATOR GRILLE	23-104
APRONS—YJ, FENDER SPLASH	23-115
ARM, LOWER SUSPENSION	2-13
ARM, PITMAN	19-17,19-20
ARM REMOVE/INSTALL, LIFTGATE WIPER	8K-17
ARM REMOVE/INSTALL, WINDSHIELD WIPER	8K-17
ARM, UPPER SUSPENSION	2-12
ARMING/DISARMING MECHANISM; RESTRAINT SYSTEMS	8M-2
ARMING/DISARMING MECHANISM; STEERING	19-48
ARMS AND PUSH RODS, ROCKER	9-23,9-65
ASH RECEIVER TRAY LAMP—XJ, I/P	23-80
ASSEMBLY	19-63,19-71
ASSEMBLY AND ADJUSTMENT, VALVE BODY	21-153
ASSEMBLY, CALIPER	5-50
ASSEMBLY, COMPRESSOR CLUTCH	24-20
ASSEMBLY, DIFFERENTIAL; FRONT SUSPENSION AND AXLE	2-38
ASSEMBLY, DIFFERENTIAL; REAR SUSPENSION AND AXLES	3-21
ASSEMBLY, FINAL; FRONT SUSPENSION AND AXLE	2-46
ASSEMBLY, FINAL; REAR SUSPENSION AND AXLES	3-29
ASSEMBLY, FUEL RAIL	14-62
ASSEMBLY, GEAR	19-43
ASSEMBLY, IMPACT SENSOR/INFLATOR	8M-2
ASSEMBLY, PINION MEASUREMENT	3-22
ASSEMBLY REMOVE/INSTALL, CLUSTER	8E-17, 8E-35
ASSEMBLY REPLACEMENT, ADJUSTER PLUG	19-29
ASSEMBLY REPLACEMENT, COLUMN	19-52
ASSEMBLY REPLACEMENT—XJ VEHICLES, DRIVE AXLE; FRONT SUSPENSION AND AXLE	2-23
ASSEMBLY REPLACEMENT—XJ VEHICLES, DRIVE AXLE; REAR SUSPENSION AND AXLES	3-14,3-31
ASSEMBLY REPLACEMENT—YJ VEHICLES, DRIVE AXLE; FRONT SUSPENSION AND AXLE	2-24
ASSEMBLY REPLACEMENT—YJ VEHICLES, DRIVE AXLE; REAR SUSPENSION AND AXLES	3-14
ASSEMBLY (SHORT BLOCK), SERVICE ENGINE	9-4
ASSEMBLY TIPS, TRANSMISSION	21-155
ASSEMBLY, TRANSFER CASE	21-294,21-319
ASSEMBLY/INSTALLATION, PINION GEAR	2-42
ASSEMBLY—XJ VEHICLES, ENGINE	9-18,9-59
ASSEMBLY—YJ VEHICLES, ENGINE	9-20,9-62
ASSIST HANDLE—XJ	23-89
ASSIST HANDLE—YJ, FULL-METAL DOOR	23-136
AUTO SHUTDOWN (ASD) RELAY—PCM OUTPUT	14-26
AUTOMATIC BELT TENSIONER—XJ MODELS WITH RIGHT HAND DRIVE	7-42
AUTOMATIC SHUT DOWN (ASD) RELAY; FUEL/IGNITION (XJ)	8W-30-1
AUTOMATIC SHUT DOWN (ASD) RELAY; FUEL/IGNITION (YJ)	8W-30-1
AUTOMATIC SHUT DOWN (ASD) RELAY; FUEL/IGNITION (XJ-RHD)	8W-30-1
AUTOMATIC SHUTDOWN (ASD) RELAY; FUEL SYSTEM	14-59
AUTOMATIC SHUTDOWN (ASD) RELAY; IGNITION SYSTEMS	8D-17,8D-1
AUTOMATIC SHUTDOWN (ASD) RELAY TEST	8D-6
AUTOMATIC SHUTDOWN (ASD) RELAY TESTING	14-46
AUTOMATIC SHUTDOWN (ASD) SENSE—PCM INPUT	14-21
AUTOMATIC TRANSMISSION	0-23
AUTOMATIC TRANSMISSION, 30RH/ 32RH	21-67
AUTOMATIC TRANSMISSION, AW-4	21-165
AUTOMATIC TRANSMISSION SHIFTER/ IGNITION INTERLOCK MECHANISM	19-55
AUXILIARY ELECTRIC COOLING FAN—XJ MODELS WITH 4.0L 6-CYLINDER ENGINE	7-35
AW-4 ACCUMULATOR COMPONENT IDENTIFICATION	21-342
AW-4 AUTOMATIC TRANSMISSION	21-165
AW-4 BUSHING AND PISTON CLEARANCE	21-339
AW-4 CLUTCH AND BRAKE PACK REQUIREMENTS	21-341
AW-4 CLUTCH DISC AND PLATE THICKNESS	21-338
AW-4 GENERAL SPECIFICATIONS	21-337
AW-4 IN-VEHICLE SERVICE	21-182
AW-4 OIL PUMP WEAR LIMITS	21-338
AW-4 RETAINER AND PISTON SPECIFICATIONS	21-340
AW-4 TORQUE SPECIFICATIONS	21-344
AW-4 TRANSMISSION DIAGNOSIS	21-176
AW-4 TRANSMISSION OVERHAUL	21-201
AW-4 TRANSMISSION REMOVAL AND INSTALLATION	21-198
AW-4 VALVE AND SPRING IDENTIFICATION	21-343
AW-4 VALVE BODY CHECK BALL DIMENSIONS	21-341
AWAY, PEDAL FALLS	5-5
AX 15 MANUAL TRANSMISSION	21-33
AX 4/5 MANUAL TRANSMISSION	21-1
AXLE (2WD), MODEL 30 AXLE AND TUBE	2-22
AXLE, 8 1/4	3-30,3-51
AXLE ALIGNMENT, REAR	3-10
AXLE AND TUBE AXLE (2WD), MODEL 30	2-22
AXLE ASSEMBLY REPLACEMENT—XJ VEHICLES, DRIVE; FRONT SUSPENSION AND AXLE	2-23
AXLE ASSEMBLY REPLACEMENT—XJ VEHICLES, DRIVE; REAR SUSPENSION AND AXLES	3-14,3-31
AXLE ASSEMBLY REPLACEMENT—YJ VEHICLES, DRIVE; FRONT SUSPENSION AND AXLE	2-24
AXLE ASSEMBLY REPLACEMENT—YJ VEHICLES, DRIVE; REAR SUSPENSION AND AXLES	3-14
AXLE BUSHING REPLACEMENT	2-12,2-34
AXLE, FRONT DRIVE	2-3
AXLE, MODEL 30	2-49
AXLE, MODEL 30 FRONT	2-49
AXLE, MODEL 35	3-13,3-51
AXLE NOISE/VIBRATION DIAGNOSIS; FRONT SUSPENSION AND AXLE	2-18
AXLE NOISE/VIBRATION DIAGNOSIS; REAR SUSPENSION AND AXLES	3-9
AXLE SHAFT	3-16
AXLE SHAFT, HUB BEARING	2-25
AXLE SHAFT OIL SEAL REPLACEMENT, INNER	2-35
AXLE SHAFT SEAL AND BEARING	3-17
AXLE SHAFT, SEAL AND BEARING SERVICE	3-32
AXLE SPECIFICATIONS; FRONT SUSPENSION AND AXLE	2-49
AXLE SPECIFICATIONS; REAR SUSPENSION AND AXLES	3-51
AXLE—YJ VEHICLES, VACUUM DISCONNECT	2-27
AXLES	3-1
AXLES, FRONT AND REAR	0-24
AXLE/SHIFT MOTOR DIAGNOSIS (CONT'D), DISCONNECT	2-30
AXLE/SHIFT MOTOR DIAGNOSIS, DISCONNECT	2-29
BACKLASH AND CONTACT PATTERN ANALYSIS; FRONT SUSPENSION AND AXLE	2-45
BACKLASH AND CONTACT PATTERN ANALYSIS; REAR SUSPENSION AND AXLES	3-27
BACK-UP LAMPS; REAR LIGHTING (XJ)	8W-51-1
BACK-UP LAMPS; REAR LIGHTING (XJ-RHD)	8W-51-1
BACK-UP LAMPS; REAR LIGHTING (YJ)	8W-51-1
BACK-UP/REAR TURN SIGNAL/TAIL LAMP BULB REPLACEMENT—XJ	8L-12
BACK-UP/REAR TURN SIGNAL/TAIL LAMP BULB REPLACEMENT—YJ	8L-28
BALANCE, TIRE AND WHEEL	22-6
BALL DIMENSIONS, AW-4 VALVE BODY CHECK	21-341
BALL STUD REPLACEMENT—XJ, LIFTGATE SUPPORT ROD	23-63
BALL STUDS, STEERING KNUCKLE	2-32
BAR, STABILIZER; FRONT SUSPENSION AND AXLE	2-11,2-15
BAR, STABILIZER; REAR SUSPENSION AND AXLES	3-5
BAR, TRACK; FRONT SUSPENSION AND AXLE	2-11,2-15
BAR, TRACK; REAR SUSPENSION AND AXLES	3-8
BAR—XJ, SOUND	23-94
BAR—YJ, SPORT	23-132
BARRIER—XJ, CARGO	23-101
BASE COAT/CLEAR COAT FINISH	23-158
BATTERY; BATTERY/STARTER/ GENERATOR SERVICE	8B-1
BATTERY; BATTERY/STARTING/ CHARGING SYSTEMS DIAGNOSTICS	8A-2
BATTERY; LUBRICATION AND MAINTENANCE	0-20
BATTERY CHARGING	8A-7
BATTERY CHARGING TIME TABLE	8A-8
BATTERY CLASSIFICATIONS AND RATINGS	8A-23
BATTERY DIAGNOSIS	8A-4
BATTERY FEED; FUEL/IGNITION (XJ)	8W-30-1
BATTERY FEED; FUEL/IGNITION (YJ)	8W-30-2
BATTERY FEED; FUEL/IGNITION (XJ-RHD)	8W-30-1
BATTERY RATINGS	8A-3
BATTERY REMOVE/INSTALL	8B-1
BATTERY SPECIFICATIONS; BATTERY/ STARTER/GENERATOR SERVICE	8B-8
BATTERY SPECIFICATIONS; BATTERY/ STARTING/CHARGING SYSTEMS DIAGNOSTICS	8A-23
BATTERY TRAY—XJ	23-14
BATTERY TRAY—YJ	23-110
BATTERY VOLTAGE—PCM INPUT	14-21
B/C-PILLAR AND LIFTGATE PILLAR TRIM COVERS—XJ	23-88
BEARING AND AXLE SHAFT, HUB	2-25
BEARING, AXLE SHAFT SEAL	3-17
BEARING LUBRICANTS, CHASSIS COMPONENT AND WHEEL	0-28
BEARING NOISE, GEAR; FRONT SUSPENSION AND AXLE	2-18
BEARING NOISE, GEAR; REAR SUSPENSION AND AXLES	3-9
BEARING REPLACEMENT, PILOT	6-12
BEARING REPLACEMENT, PITMAN SHAFT SEALS	19-34
BEARING REPLACEMENT, RELEASE	6-11
BEARING SERVICE, AXLE SHAFT, SEAL	3-32
BEARINGS, CRANKSHAFT MAIN	9-45,9-87
BEARINGS, FRONT WHEEL	0-28
BELT, ACCESSORY DRIVE	0-21
BELT DIAGNOSIS	7-38
BELT INDICATOR WARNING LAMP, SEAT; INSTRUMENT CLUSTER (XJ)	8W-40-2
BELT INDICATOR WARNING LAMP, SEAT; INSTRUMENT CLUSTER (XJ-RHD)	8W-40-2
BELT SCHEMATICS	7-38
BELT SERVICE—EXCEPT RIGHT HAND DRIVE	7-40
BELT SERVICE—XJ MODELS WITH RIGHT HAND DRIVE	7-42
BELT SWITCH, DRIVER'S SEAT	8U-1,8U-3
BELT TENSION, DRIVE	7-45
BELT TENSION SPECIFICATIONS	7-38

Description	Group-Page
BELT TENSIONER—XJ MODELS WITH RIGHT HAND DRIVE, AUTOMATIC	7-42
BELT TENSION—EXCEPT RIGHT HAND DRIVE (RHD)	7-38
BELT TENSION—EXCEPT RIGHT HAND DRIVE (RHD) MODELS	7-45
BELT TENSION—RIGHT HAND DRIVE (RHD)	7-38
BELT/BUCKLE—XJ, FRONT SHOULDER	23-90
BELT/BUCKLE—XJ, REAR SHOULDER/ LAP	23-91
BELTLINE SEAL—YJ	23-142
BELTS, ENGINE ACCESSORY DRIVE	7-38
BELTS—YJ, FRONT SHOULDER	23-154
BELTS—YJ, REAR SHOULDER	23-154
BENCH BLEEDING, MASTER CYLINDER	5-21
BENCH, GEAR ADJUSTMENTS ON	19-44
BENCH SEAT—YJ, REAR	23-153
BEZEL—XJ, INSTRUMENT CLUSTER	23-80
BEZEL—YJ, INSTRUMENT CLUSTER	23-151
BIN REMOVE/INSTALL, SUNGLASSES STORAGE	8C-7
BLADE REMOVE/INSTALL, WINDSHIELD WIPER	8K-17
BLEEDING, MASTER CYLINDER BENCH	5-21
BLEEDING RECOMMENDATIONS, BRAKE	5-10
BLEEDING (WITH ABS BRAKES), BRAKE	5-11
BLEEDING (WITH STANDARD BRAKES), BRAKE	5-11
BLEEDING—BRAKELINES AND HOSES, BRAKE FLUID—BRAKE	5-10
BLOCK, CYLINDER	9-49,9-91
BLOCK HEATER, ENGINE	7-44
BLOCKS—TWO-DOOR VEHICLES, FRONT DOOR SPACER	23-53
BLOWER MOTOR; AIR CONDITIONING/ HEATER (XJ)	8W-42-1
BLOWER MOTOR; AIR CONDITIONING/ HEATER (XJ-RHD)	8W-42-1
BLOWER MOTOR; HEATING AND AIR CONDITIONING	24-17
BLOWER MOTOR, A/C	24-35
BLOWER MOTOR, A/C-HEATER; AIR CONDITIONING/HEATER (YJ)	8W-42-2
BLOWER MOTOR (HEATING)	24-33
BLOWER MOTOR RESISTORS REPLACEMENT	24-31
BLOWER MOTOR SWITCH	24-16
BLOWER MOTOR/AIR DOOR MOTOR SWITCH REPLACEMENT	24-32
BLOWER MOTOR/FAN REPLACEMENT	24-24
BODY ASSEMBLY AND ADJUSTMENT, VALVE	21-153
BODY CHECK BALL DIMENSIONS, AW-4 VALVE	21-341
BODY CODE LETTERS, JEEP	5-2
BODY LUBRICANT SPECIFICATIONS	0-33
BODY OVERHAUL, TRANSMISSION VALVE	21-250
BODY REMOVAL, TRANSMISSION VALVE	21-186
BODY REMOVAL, VALVE	21-104
BODY SERVICE INFORMATION, GENERAL	23-1
BODY SERVICE, VALVE	21-104
BODY SIDE MOLDING/CLADDING—XJ	23-20
BODY SIDE STEP MOLDING—YJ	23-115
BODY SOLENOIDS, TRANSMISSION VALVE	21-184
BODY STRIPES/DECALS—XJ	23-21
BODY STRIPES/DECALS—YJ	23-116
BODY, THROTTLE	14-33,14-64
BOLT IDENTIFICATION	Intro.-14
BOLT STRENGTH	Intro.-15
BOOSTER CHECK VALVE TEST, POWER	5-9
BOOSTER INSTALLATION (XJ WITH ABS), POWER BRAKE	5-27
BOOSTER INSTALLATION (XJ WITHOUT ABS), POWER BRAKE	5-30
BOOSTER INSTALLATION (YJ), POWER BRAKE	5-30
BOOSTER, MASTER CYLINDER/POWER BRAKE	5-34
BOOSTER OPERATION, POWER BRAKE	5-23
BOOSTER REMOVAL (XJ WITH ABS), POWER BRAKE	5-24
BOOSTER REMOVAL (XJ WITHOUT ABS), POWER BRAKE	5-29
BOOSTER REMOVAL (YJ), POWER BRAKE	5-30
BOOSTER TEST, MASTER CYLINDER/ POWER	5-8
BOOSTER VACUUM TEST, POWER	5-9
BOOSTER—BRAKE PEDAL—BRAKELIGHT SWITCH, POWER BRAKE	5-22
BORES, HONING CYLINDER	9-2
BOX LAMP, GLOVE; INTERIOR LIGHTING (XJ)	8W-44-1
BOX LAMP, GLOVE; INTERIOR LIGHTING (XJ-RHD)	8W-44-1
BOX—YJ, GLOVE	23-152
BRACKET REPLACEMENT—XJ, INTERIOR REARVIEW MIRROR SUPPORT	23-68
BRACKET—YJ, REARVIEW MIRROR RETAINING	23-144
BRACKETS—XJ, SPARE TIRE/WHEEL HOLDDOWN AND FLOOR	23-98
BRAKE ADJUSTMENT, DRUM	5-57
BRAKE BLEEDING RECOMMENDATIONS	5-10
BRAKE BLEEDING (WITH ABS BRAKES)	5-11
BRAKE BLEEDING (WITH STANDARD BRAKES)	5-11
BRAKE BOOSTER INSTALLATION (XJ WITH ABS), POWER	5-27
BRAKE BOOSTER INSTALLATION (XJ WITHOUT ABS), POWER	5-30
BRAKE BOOSTER INSTALLATION (YJ), POWER	5-30
BRAKE BOOSTER, MASTER CYLINDER/ POWER	5-34
BRAKE BOOSTER OPERATION, POWER	5-23
BRAKE BOOSTER REMOVAL (XJ WITH ABS), POWER	5-24
BRAKE BOOSTER REMOVAL (XJ WITHOUT ABS), POWER	5-29
BRAKE BOOSTER REMOVAL (YJ), POWER	5-30
BRAKE BOOSTER—BRAKE PEDAL—BRAKELIGHT SWITCH, POWER	5-22
BRAKE CABLE TENSIONER ADJUSTMENT (XJ/YJ), PARKING	5-69
BRAKE CABLE TENSIONER REPLACEMENT (XJ), PARKING	5-66
BRAKE CHECK, PRELIMINARY	5-4
BRAKE COMPONENTS	5-1
BRAKE DIAGNOSIS, ABS	5-3
BRAKE DIAGNOSIS, SERVICE	5-4
BRAKE DRUM REFINISHING	5-58
BRAKE FLUID CONTAMINATION	5-10,5-7
BRAKE FLUID LEVEL	5-10
BRAKE FLUID, RECOMMENDED	5-10
BRAKE FLUID/LUBRICANTS/CLEANING SOLVENTS	5-2
BRAKE FLUID—BRAKE BLEEDING—BRAKELINES AND HOSES	5-10
BRAKE FRONT CABLE REPLACEMENT (YJ), PARKING	5-67
BRAKE HANDLE COVER—XJ, PARKING	23-94
BRAKE LEVER INSTALLATION (XJ WITH FULL CONSOLE), PARKING	5-64
BRAKE LEVER INSTALLATION (XJ WITH MINI CONSOLE), PARKING	5-63
BRAKE LEVER INSTALLATION (XJ WITHOUT CONSOLE), PARKING	5-65
BRAKE LEVER REMOVAL (XJ WITH FULL CONSOLE), PARKING	5-63
BRAKE LEVER REMOVAL (XJ WITH MINI CONSOLE), PARKING	5-62
BRAKE LEVER REMOVAL (XJ WITHOUT CONSOLE), PARKING	5-64
BRAKE MALFUNCTIONS, DIAGNOSING PARKING	5-8
BRAKE NOISE	5-7
BRAKE OPERATION, PARKING	5-60
BRAKE OVERHAUL, SECOND	21-241
BRAKE PACK REQUIREMENTS, AW-4 CLUTCH	21-341
BRAKE PEDAL BUSHINGS, CLUTCH	0-22
BRAKE PEDAL INSTALLATION	5-31
BRAKE PEDAL INSTALLATION (YJ), PARKING	5-66
BRAKE PEDAL REMOVAL	5-31
BRAKE PEDAL REMOVAL (YJ), PARKING	5-66
BRAKE PEDAL TRAVEL SENSOR; ANTI-LOCK BRAKES (YJ)	8W-32-1
BRAKE PISTON AND TRANSMISSION CASE OVERHAUL, FIRST-REVERSE	21-247
BRAKE REAR CABLE REPLACEMENT (XJ), PARKING	5-67
BRAKE REAR CABLE REPLACEMENT (YJ), PARKING	5-68
BRAKE ROTOR REFINISHING, DISC	5-53
BRAKE ROTOR RUNOUT, DISC	5-52
BRAKE ROTOR THICKNESS, DISC	5-52
BRAKE SAFETY PRECAUTIONS	5-2
BRAKE SWITCH	14-59
BRAKE SWITCH INPUT; ANTI-LOCK BRAKES (XJ)	8W-32-2
BRAKE SWITCH INPUT; ANTI-LOCK BRAKES (XJ-RHD)	8W-32-2
BRAKE SWITCH INPUT; ANTI-LOCK BRAKES (YJ)	8W-32-2
BRAKE SWITCH INPUT; FUEL/IGNITION (XJ)	8W-30-5
BRAKE SWITCH INPUT; FUEL/IGNITION (YJ)	8W-30-5
BRAKE SWITCH INPUT; FUEL/IGNITION (XJ-RHD)	8W-30-5
BRAKE SWITCH, PARKING	5-68
BRAKE SWITCH—PCM INPUT	14-22
BRAKE SYSTEM, POWER	0-30
BRAKE TORQUE SPECIFICATIONS	5-70
BRAKE WARNING LAMP; INSTRUMENT CLUSTER (XJ)	8W-40-2
BRAKE WARNING LAMP; INSTRUMENT CLUSTER (XJ-RHD)	8W-40-2
BRAKE WARNING LAMP; INSTRUMENT CLUSTER (YJ)	8W-40-2
BRAKE WARNING LIGHTS	5-1
BRAKELIGHT SWITCH ADJUSTMENT	5-32
BRAKELIGHT SWITCH INSTALLATION	5-32
BRAKELIGHT SWITCH REMOVAL	5-32
BRAKELINE CHARTS	5-12
BRAKELINES AND HOSES	5-12
BRAKELINING, CONTAMINATED	5-7
BRAKELINING MATERIAL	5-1
BRAKES (ABS), ANTILOCK	5-1
BRAKES, DISC	5-45
BRAKES DO NOT HOLD AFTER DRIVING THROUGH DEEP WATER PUDDLES	5-7
BRAKES, DRUM	5-55
BRAKES, PARKING	5-60
BRAKESHOE INSTALLATION, DISC	5-47
BRAKESHOE INSTALLATION, DRUM	5-55
BRAKESHOE REMOVAL, DISC	5-46
BRAKESHOE REMOVAL, DRUM	5-55
BRAKING MODE, ABS OPERATION IN ANTILOCK	5-36
BRAKING MODE, ABS OPERATION IN NORMAL	5-35
BREAK-IN, ENGINE	0-15
BRUSH GUARD—XJ	23-3
BUCKET SEAT CUSHION AND COVER—XJ	23-81
BUCKET SEAT PLATFORM—XJ	23-82
BUCKET SEATBACK COVER AND FRAME—XJ	23-81
BUCKET SEATS—XJ, FRONT	23-81
BUCKET SEATS—YJ	23-153
BULB APPLICATION—XJ VEHICLES	8L-18
BULB APPLICATION—YJ VEHICLES	8L-32
BULB REMOVE/INSTALL, READING/ COURTESY LAMP	8C-8
BULB REPLACEMENT—XJ, BACK-UP/ REAR TURN SIGNAL/TAIL LAMP	8L-12
BULB REPLACEMENT—XJ, FRONT PARK/TURN SIGNAL LAMP	8L-9
BULB REPLACEMENT—XJ, HEADLAMP	8L-7
BULB REPLACEMENT—XJ, SIDE MARKER LAMP	8L-10
BULB REPLACEMENT—XJ, UNDERHOOD LAMP	8L-13
BULB REPLACEMENT—YJ, BACK-UP/ REAR TURN SIGNAL/TAIL LAMP	8L-28
BULB REPLACEMENT—YJ, FRONT PARK/TURN SIGNAL LAMP	8L-25
BULB REPLACEMENT—YJ, HEADLAMP	8L-23
BULB REPLACEMENT—YJ, SIDE MARKER LAMP	8L-25
BULB REPLACEMENT—YJ, UNDERHOOD LAMP	8L-29
BULB REPLACEMENT—YJ VEHICLES, HARDTOP DOME/CARGO LAMP	8L-31
BUMPER, FRONT	13-16,13-5
BUMPER, REAR	13-16,13-8

Description	Group-Page
BUMPER—XJ, LIFTGATE LICENSE PLATE SCREW ANCHOR	23-65
BUMPER—XJ, REAR SEATBACK LATCH STRIKER	23-84
BUMPERS	13-16,13-5
BUS, CCD; FUEL/IGNITION (XJ)	8W-30-5
BUSHING AND PISTON CLEARANCE, AW-4	21-339
BUSHING REPLACEMENT, AXLE	2-12,2-34
BUSHING REPLACEMENT, LEAF SPRING EYE; FRONT SUSPENSION AND AXLE	2-17
BUSHING REPLACEMENT, LEAF SPRING EYE; REAR SUSPENSION AND AXLES	3-5,3-7
BUSHINGS, CLUTCH AND BRAKE PEDAL	0-22
BUZZER, COMBINATION; INTERIOR LIGHTING (YJ)	8W-44-1
BUZZER MODULE	8U-1,8U-2
BUZZER MODULE SCHEMATIC - YJ	8U-4
CABLE, ACCELERATOR PEDAL AND THROTTLE	14-17,14-58
CABLE ADJUSTMENT, PARK INTERLOCK	21-195
CABLE ADJUSTMENT, SHIFT	21-195
CABLE ADJUSTMENT, TRANSMISSION THROTTLE	21-194
CABLE ADJUSTMENT, TRANSMISSION THROTTLE VALVE	21-71
CABLE ADJUSTMENT (XJ), PARK INTERLOCK	21-101
CABLE ADJUSTMENT (XJ), SHIFT	21-100
CABLE ADJUSTMENT (XJ/YJ), THROTTLE VALVE	21-101
CABLE REMOVE/INSTALL, SERVO	8H-10
CABLE REPLACEMENT, TRANSMISSION THROTTLE	21-193
CABLE REPLACEMENT (XJ), PARKING BRAKE REAR	5-67
CABLE REPLACEMENT (YJ), PARKING BRAKE FRONT	5-67
CABLE REPLACEMENT (YJ), PARKING BRAKE REAR	5-68
CABLE REPLACEMENT—XJ, LATCH RELEASE	23-11
CABLE RESISTANCE, SPARK PLUG	8D-14
CABLE, SERVO	8H-1
CABLE, SPEEDOMETER	0-33
CABLE TENSIONER ADJUSTMENT (XJ/YJ), PARKING BRAKE	5-69
CABLE TENSIONER REPLACEMENT (XJ), PARKING BRAKE	5-66
CABLE, THROTTLE	14-17
CABLE/LINKAGE ADJUSTMENT, GEARSHIFT	21-71
CABLES, DISTRIBUTOR CAP AND ROTOR, IGNITION	0-20
CABLES, SPARK PLUG SECONDARY	8D-14, 8D-24
CABLES, VENT DOOR CONTROL	24-32
CALIBRATION, COMPASS	8C-5
CALIPER ASSEMBLY	5-50
CALIPER CLEANING AND INSPECTION	5-50
CALIPER DISASSEMBLY	5-48
CALIPER INSTALLATION	5-51
CALIPER OPERATION AND WEAR COMPENSATION	5-45
CALIPER REMOVAL	5-48
CAMSHAFT	9-32,9-74
CAMSHAFT PIN REPLACEMENT	9-34,9-75
CAMSHAFT POSITION SENSOR; FUEL SYSTEM	14-60
CAMSHAFT POSITION SENSOR; FUEL/IGNITION (XJ)	8W-30-3
CAMSHAFT POSITION SENSOR; FUEL/IGNITION (YJ)	8W-30-3
CAMSHAFT POSITION SENSOR; IGNITION SYSTEMS	8D-17,8D-2
CAMSHAFT POSITION SENSOR; FUEL/IGNITION (XJ-RHD)	8W-30-3
CAMSHAFT POSITION SENSOR TEST; FUEL SYSTEM	14-46
CAMSHAFT POSITION SENSOR TEST; IGNITION SYSTEMS	8D-6
CAMSHAFT POSITION SENSOR—PCM INPUT	14-22
(CANADA ONLY)—XJ, DAYTIME RUNNING LIGHTS	8L-15
(CANADA ONLY)—YJ, DAYTIME RUNNING LIGHTS	8L-30
CANISTER, EVAP	25-4,25-7
CAP AND ROTOR, IGNITION CABLES, DISTRIBUTOR	0-20
CAP, DISTRIBUTOR	8D-7
CAP, FUEL TANK FILLER TUBE; EMISSION CONTROL SYSTEMS	25-4,25-7
CAP, FUEL TANK FILLER TUBE; FUEL SYSTEM	14-13
CAP, RADIATOR PRESSURE	7-25
CAPACITIES, COOLING SYSTEM	7-45
CAPACITIES, FLUID	0-3
CAPACITIES, FUEL TANK	14-13,14-67
CAPACITY TEST, FUEL PUMP	14-7
CAR REPLACEMENT, PITMAN SHAFT SEALS—IN	19-23
CARDAN (CV), DOUBLE	16-11
CARDAN, SINGLE	16-10
CARGO BARRIER—XJ	23-101
CARGO LAMP AND DOME LAMP; INTERIOR LIGHTING (XJ-RHD)	8W-44-1
CARGO LAMP, COURTESY LAMPS AND DOME LAMP; INTERIOR LIGHTING (XJ)	8W-44-1
CARGO LAMP—XJ	23-94
CARPET/MAT—XJ, FRONT	23-99
CARPET/MAT—XJ, REAR	23-100
CARPET—YJ	23-156
CARPETS AND FLOOR MATS—XJ	23-99
CARRIER—YJ, EXTERNAL SPARE/ WHEEL TIRE	23-133
CASE (4WD VEHICLES), TRANSFER	0-24
CASE ASSEMBLY, TRANSFER	21-294,21-319
CASE CHANGES, TRANSFER	21-307
CASE CLEANING AND INSPECTION, TRANSMISSION	21-125
CASE COVER OIL SEAL REPLACEMENT, TIMING	9-30,9-73
CASE COVER, TIMING	9-31,9-72
CASE DISASSEMBLY AND OVERHAUL, TRANSFER	21-289,21-310
CASE IDENTIFICATION, TRANSFER	21-284, 21-307
CASE INSTALLATION, TRANSFER	21-288,21-309
CASE LUBRICANT AND FILL LEVEL, TRANSFER	21-284
CASE, NP231 TRANSFER	21-283,21-305
CASE, NP242 TRANSFER	21-307,21-331
CASE OVERHAUL, FIRST-REVERSE BRAKE PISTON AND TRANSMISSION	21-247
CASE REMOVAL, TRANSFER	21-287,21-309
CASE SKID PLATE, TRANSFER	13-15,13-3
CASE SPECIFICATIONS, TRANSMISSION/ TRANSFER	21-333
CATALYTIC CONVERTER	11-1,11-4
CATALYTIC CONVERTOR	25-1
CAUTIONS, AND WARNINGS, NOTES; WIRING DIAGRAMS—GENERAL INFORMATION (XJ)	8W-1
CCD BUS; FUEL/IGNITION (XJ)	8W-30-5
CENTER HIGH MOUNTED STOP LAMP (CHMSL)—XJ	8L-12
CENTER HIGH MOUNTED STOP LAMP (CHMSL)—YJ	8L-28
CERTIFICATION LABEL, VEHICLE SAFETY	Intro.-4
CHAIN AND SPROCKETS, TIMING	9-31,9-73
CHANGE AND FILTER REPLACEMENT, ENGINE OIL	0-16
CHANGE, LUBRICANT; FRONT SUSPENSION AND AXLE	2-23
CHANGE, LUBRICANT; REAR SUSPENSION AND AXLES	3-13,3-31
CHANGE, REFILLING AFTER OVERHAUL OR FLUID/FILTER	21-100,21-182
CHANGES AND PARTS INTERCHANGEABILITY, TRANSMISSION	21-67
CHANGES, TRANSFER CASE	21-307
CHANNEL REPLACEMENT—YJ, DOOR FRAME GLASS	23-142
CHARGING, BATTERY	8A-7
CHARGING REFRIGERANT SYSTEM	24-11
CHARGING SYSTEM; BATTERY/ STARTING/CHARGING SYSTEMS DIAGNOSTICS	8A-17
CHARGING SYSTEM; CHARGING SYSTEM (XJ)	8W-20-1
CHARGING SYSTEM; CHARGING SYSTEM (XJ-RHD)	8W-20-1
CHARGING SYSTEM; CHARGING SYSTEM (YJ)	8W-20-1
CHARGING SYSTEM INDICATOR LAMP; INSTRUMENT CLUSTER (XJ)	8W-40-3
CHARGING SYSTEM SPECIFICATIONS	8A-23
CHARGING TIME TABLE, BATTERY	8A-8
CHART, MAIN BEARING FITTING	9-48,9-90
CHART, XJ PERFORMANCE TEMPERATURE AND PRESSURE	24-13
CHART, YJ PERFORMANCE TEMPERATURE AND PRESSURE	24-13
CHART—AX 15 MANUAL TRANSMISSION, SELECTIVE SNAP RING	21-334
CHARTS, BRAKELINE	5-12
CHARTS, DIAGNOSIS GUIDES	21-77
CHARTS, GEARTRAIN OPERATION AND APPLICATION	21-169
CHARTS, INSPECTION AND DIAGNOSIS	6-4
CHASSIS AND BODY COMPONENTS	0-28
CHASSIS COMPONENT AND WHEEL BEARING LUBRICANTS	0-28
CHECK VALVE TEST, POWER BOOSTER	5-9
CHECKING FLUID LEVEL AND CONDITION	21-182
CHECKS, PRELIMINARY	7-5
CHIME/BUZZER MODULE; INTERIOR LIGHTING (XJ)	8W-44-2
CHIME/BUZZER MODULE; INTERIOR LIGHTING (XJ-RHD)	8W-44-2
CHMSL LAMPS, STOP LAMPS; REAR LIGHTING (XJ)	8W-51-1
CHMSL LAMPS, STOP LAMPS; REAR LIGHTING (XJ-RHD)	8W-51-1
CHMSL LAMPS, STOP LAMPS; REAR LIGHTING (YJ)	8W-51-1
(CHMSL)—XJ, CENTER HIGH MOUNTED STOP LAMP	8L-12
(CHMSL)—YJ, CENTER HIGH MOUNTED STOP LAMP	8L-28
CIGAR LIGHTER; HORN/CIGAR LIGHTER	8E-1
CIGAR LIGHTER; HORN/CIGAR LIGHTER (YJ)	8W-41-1
CIGAR LIGHTER; INSTRUMENT CLUSTER (XJ)	8W-40-1
CIRCUIT IDENTIFICATION; WIRING DIAGRAMS—GENERAL INFORMATION (XJ)	8W-1
CIRCUIT REMOVE/INSTALL, PRINTED	8E-19, 8E-40
CIRCUIT SENSE—PCM INPUT, IGNITION	14-23
CIRCUIT VOLTAGE, OPEN	8A-6
CLAMPS, FUEL TUBES/LINES/HOSES	14-62,14-9
CLASSIFICATION OF LUBRICANTS	0-2
CLASSIFICATIONS AND RATINGS, BATTERY	8A-23
CLEANER, AIR	14-29
CLEANER ELEMENT, AIR; EMISSION CONTROL SYSTEMS	25-7
CLEANER ELEMENT, AIR; FUEL SYSTEM	14-59
CLEANER ELEMENT, AIR; LUBRICATION AND MAINTENANCE	0-18
CLEANER HOUSING, AIR	14-58
CLEANING AND INSPECTION, CALIPER	5-50
CLEANING AND INSPECTION, GEAR	19-42
CLEANING AND INSPECTION, TRANSMISSION CASE	21-125
CLEANING OF TIRES	22-2
CLEANING/INSPECTION; FRONT SUSPENSION AND AXLE	2-37
CLEANING/INSPECTION; REAR SUSPENSION AND AXLES	3-20
CLEANING/REVERSE FLUSHING, COOLING SYSTEM	7-22
CLEARANCE AND RAMP ANGLE, GROUND	0-11
CLEARANCE, AW-4 BUSHING AND PISTON	21-339
CLOCKSPRING	19-51
CLUSTER AND GAUGE HOUSINGS—YJ, INSTRUMENT	23-151
CLUSTER ASSEMBLY REMOVE/INSTALL	8E-17, 8E-35
CLUSTER BEZEL—XJ, INSTRUMENT	23-80
CLUSTER BEZEL—YJ, INSTRUMENT	23-151
CLUSTER CONNECTORS (RHD)	8E-11
CLUSTER, GAUGE PACKAGE	8E-31,8E-43
CLUSTER GROUND; INSTRUMENT CLUSTER (XJ)	8W-40-3

Description	Group-Page
CLUSTER GROUND; INSTRUMENT CLUSTER (XJ-RHD)	8W-40-2
CLUSTER ILLUMINATION LAMPS	8E-16,8E-26, 8E-34,8E-4
CLUSTER, INSTRUMENT; INSTRUMENT CLUSTER (XJ)	8W-40-1
CLUSTER, INSTRUMENT; INSTRUMENT CLUSTER (XJ-RHD)	8W-40-1
CLUSTER, INSTRUMENT; INSTRUMENT CLUSTER (YJ)	8W-40-1
CLUSTER (LHD), HIGH-LINE GAUGE	8E-9
CLUSTER (LHD), TELL-TALE	8E-10
CLUSTER, LOW-LINE GAUGE	8E-8
CLUSTER, MAIN	8E-30
CLUSTERS, INSTRUMENT	8E-24,8E-1
CLUTCH, A/C COMPRESSOR	24-15
CLUTCH AND BRAKE PACK REQUIREMENTS, AW-4	21-341
CLUTCH AND BRAKE PEDAL BUSHINGS	0-22
CLUTCH ASSEMBLY, COMPRESSOR	24-20
CLUTCH COMPONENT LUBRICATION	6-10
CLUTCH COMPONENTS	6-1
CLUTCH, COMPRESSOR	24-16
CLUTCH CONTAMINATION	6-3
CLUTCH COVER AND DISC INSTALLATION	6-10
CLUTCH COVER AND DISC REMOVAL	6-10
CLUTCH COVER AND DISC RUNOUT	6-3
CLUTCH DIAGNOSIS	6-3
CLUTCH DISC AND PLATE THICKNESS, AW-4	21-338
CLUTCH FLUID LEVEL	6-14
CLUTCH HOUSING MISALIGNMENT	6-4
CLUTCH HOUSING REPLACEMENT	6-13
CLUTCH HYDRAULIC LINKAGE INSTALLATION	6-14
CLUTCH HYDRAULIC LINKAGE REMOVAL	6-13
CLUTCH INSPECTION, TORQUE CONVERTER STATOR	21-199
CLUTCH LINKAGE FLUID	6-1
CLUTCH MASTER CYLINDER	0-22
CLUTCH MISALIGNMENT	6-3
CLUTCH OPERATION	6-2
CLUTCH OVERHAUL, DIRECT	21-228
CLUTCH OVERHAUL, OVERDRIVE PLANETARY GEAR	21-218
CLUTCH OVERHAUL, SUN GEAR AND NO. 1 ONE-WAY	21-238
CLUTCH PEDAL INSTALLATION	6-15
CLUTCH PEDAL REMOVAL	6-15
CLUTCH RELAY, A/C COMPRESSOR	24-15,24-16
CLUTCH RELAY, AIR CONDITIONING (A/C)	14-58
CLUTCH RELAY TEST, TORQUE CONVERTER	14-48
CLUTCH RELAY, TORQUE CONVERTER	14-65
CLUTCH RELAY—PCM OUTPUT, AIR CONDITIONING (A/C)	14-26
CLUTCH RELAY—PCM OUTPUT, TORQUE CONVERTER	14-29
CLUTCH SAFETY PRECAUTIONS	6-10
CLUTCH SERVICE	6-10
CLUTCH SWITCH, FIN SENSING CYCLING	24-15,24-31
CLUTCH (TCC) SOLENOID AND RELAY, TORQUE CONVERTER; FUEL/IGNITION (XJ)	8W-30-4
CLUTCH (TCC) SOLENOID AND RELAY, TORQUE CONVERTER; TRANSMISSION CONTROLS (YJ)	8W-31-1
CLUTCH (TCC) SOLENOID AND RELAY—2.5L ENGINE ONLY, TORQUE CONVERTER; TRANSMISSION CONTROLS (XJ)	8W-31-1
CLUTCH—LOW-REVERSE DRUM—REAR SUPPORT OVERHAUL, OVERRUNNING	21-125
CODE DECODING, VEHICLE	Intro.-5
CODE DESIGNATIONS, VEHICLE	Intro.-1
CODE (DTC), DIAGNOSTIC TROUBLE	14-54
CODE, GENERATOR DIAGNOSTIC TROUBLE	8A-22
CODE IDENTIFICATION, WIRE; WIRING DIAGRAMS—GENERAL INFORMATION (XJ)	8W-1
CODE PLATE, VEHICLE	Intro.-4
CODE, SPEED CONTROL DIAGNOSTIC TROUBLE	8H-5
CODES AND DIMENSIONS, DESIGNATIONS, LABELS/PLATES	Intro.-1
COIL, EVAPORATOR	24-30
COIL, IGNITION; FUEL SYSTEM	14-62
COIL, IGNITION; FUEL/IGNITION (XJ)	8W-30-2
COIL, IGNITION; FUEL/IGNITION (YJ)	8W-30-2
COIL, IGNITION; IGNITION SYSTEMS	8D-22, 8D-4,8D-9
COIL, IGNITION; FUEL/IGNITION (XJ-RHD)	8W-30-2
COIL RESISTANCE, IGNITION	8D-9
COIL SPRING	2-14
COIL—PCM OUTPUT, IGNITION	14-28
COLD CRANKING SPECIFICATIONS, 2.5L STARTING SYSTEM	8A-23
COLD CRANKING SPECIFICATIONS, 4.0L STARTING SYSTEM	8A-23
COLUMN ASSEMBLY REPLACEMENT	19-52
COLUMN COMPONENT SERVICE	19-54
COLUMN GENERAL SERVICE—XJ, STEERING	19-47
COLUMN, NON-TILT STEERING	19-60
COLUMN REPLACEMENT	19-58
COLUMN, TILT STEERING	19-66
COLUMN—XJ, STEERING	19-78
COLUMN—YJ, STEERING	19-58,19-78
COMBINATION BUZZER; INTERIOR LIGHTING (YJ)	8W-44-1
COMBINATION FLASHER; TURN SIGNALS (XJ)	8W-52-1
COMBINATION VALVE	5-34
COMBINATION VALVE INSTALLATION (WITH ABS), MASTER CYLINDER	5-20
COMBINATION VALVE REMOVAL (WITH ABS), MASTER CYLINDER	5-17
COMBINATION VALVE REPLACEMENT (NON-ABS)	5-16
COMBUSTION PRESSURE LEAKAGE TEST, CYLINDER	9-6
COMBUSTION PRESSURE LEAKAGE TEST DIAGNOSIS, CYLINDER	9-7
COMFORT SWITCH, TRANSMISSION; TRANSMISSION CONTROLS (XJ-RHD)	8W-31-1
COMPASS	8C-1
COMPASS/DISPLAY SELF-DIAGNOSTIC TEST	8C-2
COMPASS/THERMOMETER DIAGNOSIS	8C-4
COMPENSATION, CALIPER OPERATION AND WEAR	5-45
COMPONENTS—YJ, EVAPORATIVE HOUSING	24-6
COMPONENTS—YJ, INSTRUMENT PANEL	23-152
COMPONENTS—YJ VEHICLES, BODY	23-102
COMPRESSION PRESSURE TEST, CYLINDER	9-5
COMPRESSOR	24-19
COMPRESSOR, A/C; AIR CONDITIONING/ HEATER (YJ)	8W-42-2
COMPRESSOR, AIR-CONDITIONER	0-21
COMPRESSOR CLUTCH	24-16
COMPRESSOR CLUTCH, A/C	24-15
COMPRESSOR CLUTCH ASSEMBLY	24-20
COMPRESSOR CLUTCH RELAY, A/C	24-15,24-16
COMPRESSOR SERVICE	24-19
CONDENSER, A/C	24-34
CONDENSER FILTER DRIER—2.5L ENGINES	24-27
CONDENSER—4.0L ENGINES	24-28
CONDITION, CHECKING FLUID LEVEL	21-182
CONDITIONING (A/C) CLUTCH RELAY, AIR	14-58
CONDITIONING (A/C) CLUTCH RELAY—PCM OUTPUT, AIR	14-26
CONDITIONING (A/C) CONTROLS—PCM INPUT, AIR	14-21
CONDITIONING, AIR	24-37
CONDITIONING CONTROLS—XJ VEHICLES, AIR	24-15
CONDITIONING CONTROLS—YJ VEHICLES, AIR	24-16
CONDITIONING, HEATER AND AIR; AIR CONDITIONING/HEATER (YJ)	8W-42-2
CONDITIONING OPERATION, AIR; AIR CONDITIONING/HEATER (XJ)	8W-42-2
CONDITIONING OPERATION, AIR; AIR CONDITIONING/HEATER (XJ-RHD)	8W-42-2
CONDITIONING PERFORMANCE TESTS, AIR	24-12
CONDITIONING SCHEMATIC—XJ, AIR	24-5
CONDITIONING TEST PROCEDURES, HEATING AND AIR	24-15
CONDITIONS, NORMAL OPERATING	5-3
CONNECTING ROD BEARING FITTING CHART	9-41,9-83
CONNECTING RODS, PISTONS	9-39,9-81
CONNECTIONS, INTERMITTENT AND POOR; WIRING DIAGRAMS—GENERAL INFORMATION (XJ)	8W-4
CONNECTIONS, RADIO ILLUMINATION RELAY	8F-4
CONNECTIONS, STARTER RELAY	8A-15
CONNECTOR, ABS DIAGNOSTIC	5-35,5-3
CONNECTOR AND TERMINAL REPLACEMENT; WIRING DIAGRAMS—GENERAL INFORMATION (XJ)	8W-7
CONNECTOR, DATA LINK; ANTI-LOCK BRAKES (XJ)	8W-32-2
CONNECTOR, DATA LINK; ANTI-LOCK BRAKES (XJ-RHD)	8W-32-2
CONNECTOR, DATA LINK; ANTI-LOCK BRAKES (YJ)	8W-32-2
CONNECTOR, DATA LINK; FUEL/IGNITION (XJ)	8W-30-5
CONNECTOR, DATA LINK; FUEL/IGNITION (YJ)	8W-30-5
CONNECTOR, DATA LINK; TRANSMISSION CONTROLS (XJ-RHD)	8W-31-1
CONNECTOR, DATA LINK; FUEL/IGNITION (XJ-RHD)	8W-30-4
CONNECTOR LOCATIONS; CONNECTOR LOCATIONS (XJ)	8W-90-1
CONNECTOR LOCATIONS; CONNECTOR LOCATIONS (XJ-RHD)	8W-90-1
CONNECTOR LOCATIONS; CONNECTOR LOCATIONS (YJ)	8W-90-1
CONNECTOR LOCATIONS; CONNECTOR PIN OUTS (XJ)	8W-80-1
CONNECTOR LOCATIONS; CONNECTOR PIN OUTS (XJ-RHD)	8W-80-1
CONNECTOR LOCATIONS; CONNECTOR PIN OUTS (YJ)	8W-80-1
CONNECTOR LOCATIONS; WIRING DIAGRAMS (XJ)	8W-1
CONNECTOR LOCATIONS; WIRING DIAGRAMS (XJ-RHD)	8W-1
CONNECTOR LOCATIONS; WIRING DIAGRAMS (YJ)	8W-1
CONNECTOR, POWERTRAIN CONTROL MODULE (PCM) 60-WAY	14-40
CONNECTOR REPLACEMENT; WIRING DIAGRAMS—GENERAL INFORMATION (XJ)	8W-6
CONNECTOR—PCM INPUT, DATA LINK	14-22
CONNECTOR—PCM OUTPUT, DATA LINK	14-27
CONNECTORS; WIRING DIAGRAMS—GENERAL INFORMATION (XJ)	8W-2
CONNECTORS (RHD), CLUSTER	8E-11
CONNECTORS, TERMINAL/CONNECTOR REPAIR—MOLEX; WIRING DIAGRAMS—GENERAL INFORMATION (XJ)	8W-6
CONSOLE, OVERHEAD; OVERHEAD CONSOLE (XJ)	8W-49-1
CONSOLE, OVERHEAD; OVERHEAD CONSOLE (XJ-RHD)	8W-49-1
CONSOLE REMOVE/INSTALL, OVERHEAD	8C-6
CONSOLE SHIFT, DISASSEMBLY—COLUMN OR	19-60
CONSOLE—XJ, FULL FLOOR	23-95
CONSOLE—XJ, MINI-FLOOR	23-94
CONSOLE—XJ, OVERHEAD; BODY COMPONENTS—XJ VEHICLES	23-93
CONSOLE—XJ, OVERHEAD; LAMPS	8L-17
CONSOLES—YJ, FLOOR	23-155
CONTACT PATTERN ANALYSIS, BACKLASH; FRONT SUSPENSION AND AXLE	2-45
CONTACT PATTERN ANALYSIS, BACKLASH; REAR SUSPENSION AND AXLES	3-27
CONTACT/CLOCKSPRING, HORN	8G-4
CONTAMINATED BRAKELINING	5-7
CONTAMINATION, BRAKE FLUID	5-10,5-7
CONTAMINATION, CLUTCH	6-3

Description	Group-Page
CONTENTS; INSTRUMENT PANEL AND GAUGES—XJ	8E-24
CONTENTS; LAMPS	8L-19
CONTINUITY (LEFT POSITION), POWER MIRROR SWITCH	8T-3
CONTINUITY, POWER SEAT SWITCH	8R-2
CONTINUITY (RIGHT POSITION), POWER MIRROR SWITCH	8T-3
CONTINUITY TESTS, IGNITION SWITCH	8D-30
CONTROL AND DISPLAY SYMBOLS, INTERNATIONAL VEHICLE	Intro.-5
CONTROL AND DISPLAY SYMBOLS, VEHICLE	Intro.-10
CONTROL CABLES, VENT DOOR	24-32
CONTROL DIAGNOSTIC TROUBLE CODE, SPEED	8H-5
CONTROL, FUEL PUMP ELECTRICAL	14-5
CONTROL (IAC) MOTOR, IDLE AIR; FUEL SYSTEM	14-62
CONTROL (IAC) MOTOR, IDLE AIR; FUEL/IGNITION (XJ)	8W-30-2
CONTROL (IAC) MOTOR, IDLE AIR; FUEL/IGNITION (YJ)	8W-30-2
CONTROL (IAC) MOTOR, IDLE AIR; FUEL/IGNITION (XJ-RHD)	8W-30-2
CONTROL (IAC) MOTOR—PCM OUTPUT, IDLE AIR	14-27
CONTROL INFORMATION (VECI) LABEL, VEHICLE EMISSION	25-1
CONTROL MODULE (PCM) 60-WAY CONNECTOR, POWERTRAIN	14-40
CONTROL MODULE (PCM), POWERTRAIN; EMISSION CONTROL SYSTEMS	25-7
CONTROL MODULE (PCM), POWERTRAIN; FUEL SYSTEM	14-20,14-64
CONTROL MODULE (PCM), POWERTRAIN; IGNITION SYSTEMS	8D-11, 8D-23,8D-5
CONTROL MODULE, POWERTRAIN	8H-1,8H-7
CONTROL MODULE (TCM) SERVICE, TRANSMISSION	21-183
CONTROL MODULE, TRANSMISSION; TRANSMISSION CONTROLS (XJ-RHD)	8W-31-1
CONTROL MODULE—4.0L ENGINE ONLY, TRANSMISSION; TRANSMISSION CONTROLS (XJ)	8W-31-1
CONTROL MOTOR TEST, IDLE AIR	14-49
CONTROL PANEL LAMP, ACCESSORY LAMP AND HEATER; INTERIOR LIGHTING (YJ)	8W-44-1
CONTROL REPLACEMENT, HEATER	24-32
CONTROL REPLACEMENT, HEATER AND A/C	24-23
CONTROL SERVO REMOVE/INSTALL, SPEED	8H-9
CONTROL SERVO, SPEED	8H-1,8H-6
CONTROL SWITCH REMOVE/INSTALL, SPEED	8H-9
CONTROL SWITCH, SPEED	8H-1,8H-6
CONTROL SYSTEM, EMISSION	0-20
CONTROL SYSTEM, EVAP (EVAPORATION)	25-4
CONTROL SYSTEM MAINTENANCE, EMISSION	0-4
CONTROL THERMOSTAT, TEMPERATURE	24-34
CONTROL, THERMOSTATIC	24-16
CONTROL UNIT (ECU), ELECTRONIC	5-34
CONTROL UNIT (HCU), HYDRAULIC	5-33
CONTROL UNIT, HYDRAULIC; ANTI-LOCK BRAKES (XJ)	8W-32-2
CONTROL UNIT, HYDRAULIC; ANTI-LOCK BRAKES (XJ-RHD)	8W-32-2
CONTROL UNIT, HYDRAULIC; ANTI-LOCK BRAKES (YJ)	8W-32-2
CONTROL VALVE FITTING O-RING SEAL, FLOW	19-14
CONTROL, VEHICLE SPEED; VEHICLE SPEED CONTROL (XJ)	8W-33-1
CONTROL, VEHICLE SPEED; VEHICLE SPEED CONTROL (XJ-RHD)	8W-33-1
CONTROL—PCM INPUT, SPEED	14-25
CONTROL—PCM OUTPUT, SPEED	14-29
CONTROLS AND COMPONENTS, TRANSMISSION	21-67
CONTROLS, EMISSION	25-4
CONTROLS—PCM INPUT, AIR CONDITIONING (A/C)	14-21
CONTROLS—XJ VEHICLES, AIR CONDITIONING	24-15
CONTROLS—YJ VEHICLES, AIR CONDITIONING	24-16
CONVERSION FORMULAS AND EQUIVALENT VALUES	Intro.-11
CONVERSION, METRIC	Intro.-16
CONVERSION, METRIC AND ENGLISH/ SAE	Intro.-11
CONVERTER, CATALYTIC	11-1,11-4
CONVERTER CLUTCH RELAY TEST, TORQUE	14-48
CONVERTER CLUTCH RELAY, TORQUE	14-65
CONVERTER CLUTCH RELAY—PCM OUTPUT, TORQUE	14-29
CONVERTER CLUTCH (TCC) SOLENOID AND RELAY, TORQUE; FUEL/IGNITION (XJ)	8W-30-4
CONVERTER CLUTCH (TCC) SOLENOID AND RELAY, TORQUE; TRANSMISSION CONTROLS (YJ)	8W-31-1
CONVERTER CLUTCH (TCC) SOLENOID AND RELAY—2.5L ENGINE ONLY, TORQUE; TRANSMISSION CONTROLS (XJ)	8W-31-1
CONVERTER DIAGNOSIS, TORQUE	21-86,21-87, 21-88
CONVERTER HOUSING LEAK DIAGNOSIS	21-75
CONVERTER INSTALLATION, TRANSMISSION	21-117
CONVERTER INSTALLATION, TRANSMISSION AND TORQUE	21-199
CONVERTER REMOVAL, TRANSMISSION	21-115
CONVERTER REMOVAL, TRANSMISSION AND TORQUE	21-198
CONVERTER STALL TEST	21-74
CONVERTER STALL TEST, TORQUE	21-178
CONVERTER STATOR CLUTCH INSPECTION, TORQUE	21-199
CONVERTER, TORQUE	21-167,21-67
CONVERTER—PUMP SEAL—DRIVE PLATE SERVICE	21-116
CONVERTOR, CATALYTIC	25-1
COOLANT	7-20
COOLANT RESERVE/OVERFLOW SYSTEM	7-24
COOLANT ROUTING, SYSTEM	7-1
COOLANT TEMPERATURE GAUGE, ENGINE; INSTRUMENT CLUSTER (XJ)	8W-40-1
COOLANT TEMPERATURE SENSOR	25-7
COOLANT TEMPERATURE SENSOR, ENGINE; FUEL SYSTEM	14-60
COOLANT TEMPERATURE SENSOR, ENGINE; FUEL/IGNITION (XJ)	8W-30-3
COOLANT TEMPERATURE SENSOR, ENGINE; FUEL/IGNITION (YJ)	8W-30-3
COOLANT TEMPERATURE SENSOR, ENGINE; IGNITION SYSTEMS	8D-19,8D-5
COOLANT TEMPERATURE SENSOR, ENGINE; FUEL/IGNITION (XJ-RHD)	8W-30-3
COOLANT TEMPERATURE SENSOR TEST, ENGINE; FUEL SYSTEM	14-46
COOLANT TEMPERATURE SENSOR TEST, ENGINE; IGNITION SYSTEMS	8D-9
COOLANT TEMPERATURE SENSOR—PCM INPUT, ENGINE	14-23
COOLANT TEMPERATURE WARNING LAMP, ENGINE; INSTRUMENT CLUSTER (XJ)	8W-40-1
COOLANT TEMPERATURE WARNING LAMP, ENGINE; INSTRUMENT CLUSTER (XJ-RHD)	8W-40-1
COOLER FLOW TESTING, TRANSMISSION	21-113
COOLER LINE AND FITTING SERVICE, TRANSMISSION	21-111
COOLER LINE FITTINGS, TRANSMISSION	21-197
COOLER REVERSE FLUSHING, TRANSMISSION	21-114
COOLER SERVICE, TRANSMISSION	21-196
COOLERS, TRANSMISSION OIL	7-36
COOLING FAN—XJ MODELS WITH 4.0L 6-CYLINDER ENGINE, AUXILIARY ELECTRIC	7-35
COOLING SYSTEM; COOLING SYSTEM	7-1
COOLING SYSTEM; HEATING AND AIR CONDITIONING	24-10
COOLING SYSTEM CAPACITIES	7-45
COOLING SYSTEM CLEANING/REVERSE FLUSHING	7-22
COOLING SYSTEM COMPONENTS	7-1
COOLING SYSTEM DIAGNOSIS	7-6
COOLING SYSTEM, DRAINING	7-21
COOLING SYSTEM, ENGINE	0-18
COOLING SYSTEM FANS	7-32
COOLING SYSTEM FOR LEAKS, TESTING	7-22
COOLING SYSTEM HOSES	7-32
COOLING SYSTEM, REFILLING	7-21
CORE AND HOUSING, HEATER	24-33
CORE, HEATER	24-26
COURTESY LAMPS AND DOME LAMP, CARGO LAMP; INTERIOR LIGHTING (XJ)	8W-44-1
COURTESY LAMPS AND DOME LAMPS; INTERIOR LIGHTING (YJ)	8W-44-1
COURTESY LAMPS, READING	8C-1
COVER AND DISC INSTALLATION, CLUTCH	6-10
COVER AND DISC REMOVAL, CLUTCH	6-10
COVER AND DISC RUNOUT, CLUTCH	6-3
COVER AND FRAME—XJ, BUCKET SEATBACK	23-81
COVER, ENGINE CYLINDER HEAD	9-22,9-64
COVER, FRAME CROSSMEMBER	13-16
COVER OIL SEAL REPLACEMENT, TIMING CASE	9-30,9-73
COVER REPLACEMENT, PITMAN SHAFT AND SIDE	19-28
COVER, TIMING CASE	9-31,9-72
COVER—XJ, BUCKET SEAT CUSHION	23-81
COVER—XJ, PARKING BRAKE HANDLE	23-94
COVER—XJ, REAR SEAT CUSHION	23-82
COVER—XJ, REAR SEATBACK	23-84
COVERS—XJ, B/C-PILLAR AND LIFTGATE PILLAR TRIM	23-88
COWL GRILLE AND SCREEN—XJ	23-12
COWL GRILLE AND SCREEN—YJ	23-109
COWL WEATHERSTRIP SEAL/ CROSSMEMBER AIR DEFLECTOR—XJ	23-11
COWL WEATHERSTRIP SEAL—YJ	23-109
CRANKCASE VENTILATION SYSTEM; EMISSION CONTROL SYSTEMS	25-5
CRANKCASE VENTILATION SYSTEM; LUBRICATION AND MAINTENANCE	0-19
CRANKING SPECIFICATIONS, 2.5L STARTING SYSTEM COLD	8A-23
CRANKING SPECIFICATIONS, 4.0L STARTING SYSTEM COLD	8A-23
CRANKSHAFT MAIN BEARINGS	9-45,9-87
CRANKSHAFT POSITION SENSOR; FUEL SYSTEM	14-60
CRANKSHAFT POSITION SENSOR; FUEL/IGNITION (XJ)	8W-30-3
CRANKSHAFT POSITION SENSOR; FUEL/IGNITION (YJ)	8W-30-3
CRANKSHAFT POSITION SENSOR; IGNITION SYSTEMS	8D-17,8D-3
CRANKSHAFT POSITION SENSOR; FUEL/IGNITION (XJ-RHD)	8W-30-3
CRANKSHAFT POSITION SENSOR TEST; FUEL SYSTEM	14-47
CRANKSHAFT POSITION SENSOR TEST; IGNITION SYSTEMS	8D-7
CRANKSHAFT POSITION SENSOR—PCM INPUT	14-22
CROSSMEMBER COVER, FRAME	13-16
CROSSMEMBER—XJ, RADIATOR SUPPORT	23-6
CUSHION AND COVER—XJ, BUCKET SEAT	23-81
CUSHION COVER—XJ, REAR SEAT	23-82
CUSHION—XJ, REAR SEAT	23-82
CUT-OFF SWITCH, LOW-PRESSURE HIGH-PRESSURE	24-15,24-16
CYCLING CLUTCH SWITCH, FIN SENSING	24-15,24-31
CYLINDER AND COMBINATION VALVE INSTALLATION (WITH ABS), MASTER	5-20
CYLINDER AND COMBINATION VALVE REMOVAL (WITH ABS), MASTER	5-17
CYLINDER BENCH BLEEDING, MASTER	5-21
CYLINDER BLOCK	9-49,9-91
CYLINDER BORES, HONING	9-2
CYLINDER, CLUTCH MASTER	0-22
CYLINDER COMBUSTION PRESSURE LEAKAGE TEST	9-6

Description	Group-Page
CYLINDER COMBUSTION PRESSURE LEAKAGE TEST DIAGNOSIS	9-7
CYLINDER COMPRESSION PRESSURE TEST	9-5
CYLINDER DISPOSAL—XJ, LIFTGATE SUPPORT ROD	23-63
CYLINDER ENGINE, VACUUM ROUTING SCHEMATIC—2.5L 4	25-3
CYLINDER ENGINE, VACUUM ROUTING SCHEMATIC—4.0L 6	25-3
CYLINDER HEAD COVER, ENGINE	9-22,9-64
CYLINDER HEAD, ENGINE	9-25,9-67
CYLINDER HEAD GASKET FAILURE DIAGNOSIS, ENGINE	9-5
CYLINDER INSTALLATION (NON-ABS), MASTER	5-16
CYLINDER INSTALLATION, WHEEL	5-58
CYLINDER OVERHAUL (4-CYLINDER MODELS), MASTER	5-16
CYLINDER OVERHAUL, WHEEL	5-57
CYLINDER REMOVAL (NON-ABS), MASTER	5-15
CYLINDER REMOVAL, WHEEL	5-57
CYLINDER SERVICE, IGNITION SWITCH AND KEY	8D-26
CYLINDER—COMBINATION VALVE, MASTER	5-15
CYLINDER—XJ, DOOR KEY LOCK	23-47
CYLINDER—XJ, LIFTGATE SUPPORT ROD	23-62
CYLINDER—YJ, FULL-METAL DOOR KEY LOCK	23-139
CYLINDER—YJ, TAILGATE LOCK	23-122
CYLINDER/POWER BOOSTER TEST, MASTER	5-8
CYLINDER/POWER BRAKE BOOSTER, MASTER	5-34
CYLINDER/STRIKER—XJ, LIFTGATE LATCH/KEY LOCK	23-61
DAMAGED OR WORN THREADS, REPAIR	9-4
DAMPER, ENGINE	9-17
DAMPER, STEERING	19-17,19-20
DAMPER, VIBRATION	9-30,9-72
DASH PANEL INSULATOR PANEL—XJ	23-12
DATA LINK CONNECTOR; ANTI-LOCK BRAKES (XJ)	8W-32-2
DATA LINK CONNECTOR; ANTI-LOCK BRAKES (XJ-RHD)	8W-32-2
DATA LINK CONNECTOR; ANTI-LOCK BRAKES (YJ)	8W-32-2
DATA LINK CONNECTOR; FUEL/IGNITION (XJ)	8W-30-5
DATA LINK CONNECTOR; FUEL/IGNITION (YJ)	8W-30-5
DATA LINK CONNECTOR; TRANSMISSION CONTROLS (XJ-RHD)	8W-31-1
DATA LINK CONNECTOR; FUEL/IGNITION (XJ-RHD)	8W-30-4
DATA LINK CONNECTOR—PCM INPUT	14-22
DATA LINK CONNECTOR—PCM OUTPUT	14-27
DATA, VEHICLE DIMENSION	Intro.-5,Intro.-6
DATA, VEHICLE LOAD	Intro.-5
DATA—XJ, VEHICLE LOAD	Intro.-7
DATA—YJ, VEHICLE LOAD	Intro.-8
DAYTIME RUNNING LAMP (DRL) MODULE; FRONT LIGHTING (XJ)	8W-50-2
DAYTIME RUNNING LAMP (DRL) MODULE—CANADIAN VEHICLES ONLY; FRONT LIGHTING (YJ)	8W-50-2
DAYTIME RUNNING LIGHTS (CANADA ONLY)—XJ	8L-15
DAYTIME RUNNING LIGHTS (CANADA ONLY)—YJ	8L-30
DECODING, VEHICLE CODE	Intro.-5
DECODING, VEHICLE IDENTIFICATION NUMBER (VIN)	Intro.-4
DEFLECTOR—XJ, COWL WEATHERSTRIP SEAL/CROSSMEMBER AIR	23-11
DEFOGGER RELAY	8N-3
DEFOGGER RELAY/TIMER	8N-1
DEFOGGER RELAY/TIMER REMOVE/ INSTALL	8N-4
DEFOGGER SWITCH	8N-1,8N-3
DEFOGGER SWITCH REMOVE/INSTALL	8N-4
DEFROSTER NOZZLE AND DUCT	24-33
DELAY FUNCTION TROUBLE DIAGNOSIS—XJ, HEADLAMP	8L-14
DELAY MODULE, HEADLAMP; FRONT LIGHTING (XJ)	8W-50-2
DELAY MODULE, HEADLAMP; FRONT LIGHTING (XJ-RHD)	8W-50-1
DELAY MODULE REPLACEMENT—XJ, HEADLAMP	8L-14
DELAY MODULE—XJ, SENTINEL HEADLAMP	8L-14
DELIVERY SYSTEM, FUEL	14-3
DEMAGNETIZING, COMPASS	8C-5
DEPTH INFORMATION, PINION GEAR; FRONT SUSPENSION AND AXLE	2-39
DEPTH INFORMATION, PINION GEAR; REAR SUSPENSION AND AXLES	3-21
DEPTH VARIANCE, PINION GEAR; FRONT SUSPENSION AND AXLE	2-40
DEPTH VARIANCE, PINION GEAR; REAR SUSPENSION AND AXLES	3-22,3-39
DESCRIPTION; HEATING AND AIR CONDITIONING	24-19,24-23,24-32
DESCRIPTION; TRANSMISSION AND TRANSFER CASE	21-165
DESCRIPTION/SYSTEM OPERATION, MULTI-PORT FUEL INJECTION (MFI)—COMPONENT	14-19
DESIGNATIONS, LABELS/PLATES, CODES AND DIMENSIONS	Intro.-1
DESIGNATIONS, VEHICLE	Intro.-1
DESIGNATIONS, VEHICLE CODE	Intro.-1
DETECTION AND REPAIR—XJ, STATIONARY GLASS WATER LEAK	23-76
DETECTION AND REPAIR—YJ, STATIONARY GLASS WATER LEAK	23-150
DEVICES, ELECTROSTATIC DISCHARGE (ESD) SENSITIVE; WIRING DIAGRAMS—GENERAL INFORMATION (XJ)	8W-2
DIAGNOSING PARKING BRAKE MALFUNCTIONS	5-8
DIAGNOSIS; AUDIO SYSTEMS	8F-2
DIAGNOSIS; BATTERY/STARTING/ CHARGING SYSTEMS DIAGNOSTICS	8A-10, 8A-11,8A-17,8A-3
DIAGNOSIS; CHIME/BUZZER WARNING SYSTEMS	8U-2
DIAGNOSIS; COOLING SYSTEM	7-4
DIAGNOSIS; HORNS	8G-2
DIAGNOSIS; INSTRUMENT PANEL AND GAUGES—XJ	8E-27,8E-5
DIAGNOSIS; OVERHEAD CONSOLE	8C-2
DIAGNOSIS; POWER LOCKS	8P-2
DIAGNOSIS; POWER MIRRORS	8T-1
DIAGNOSIS; POWER SEATS	8R-2
DIAGNOSIS; POWER WINDOWS	8S-1
DIAGNOSIS; REAR WINDOW DEFOGGER	8N-1
DIAGNOSIS; RESTRAINT SYSTEMS	8M-2
DIAGNOSIS; STEERING	19-37
DIAGNOSIS; TURN SIGNAL AND HAZARD WARNING SYSTEMS	8J-3
DIAGNOSIS; VEHICLE SPEED CONTROL SYSTEM	8H-2
DIAGNOSIS, 2.5L STARTER NOISE	8A-16
DIAGNOSIS, 30RH/32RH TRANSMISSION	21-70
DIAGNOSIS, ABS BRAKE	5-3
DIAGNOSIS, ANTILOCK ECU AND HCU	5-3
DIAGNOSIS, AW-4 TRANSMISSION	21-176
DIAGNOSIS, AXLE NOISE/VIBRATION; FRONT SUSPENSION AND AXLE	2-18
DIAGNOSIS, AXLE NOISE/VIBRATION; REAR SUSPENSION AND AXLES	3-9
DIAGNOSIS, BATTERY	8A-4
DIAGNOSIS, BELT	7-38
DIAGNOSIS, CHARGING SYSTEM	8A-19
DIAGNOSIS, CLUTCH	6-3
DIAGNOSIS, COMPASS/THERMOMETER	8C-4
DIAGNOSIS (CONT.), COOLING SYSTEM	7-10, 7-11,7-12,7-7,7-8,7-9
DIAGNOSIS (CONT.), SERPENTINE DRIVE BELT	7-40
DIAGNOSIS (CONT'D), DISCONNECT AXLE/SHIFT MOTOR	2-30
DIAGNOSIS (CONT'D), SERVICE; FRONT SUSPENSION AND AXLE	2-21
DIAGNOSIS (CONT'D), SERVICE; REAR SUSPENSION AND AXLES	3-12
DIAGNOSIS, CONVERTER HOUSING LEAK	21-75
DIAGNOSIS, COOLING SYSTEM	7-6
DIAGNOSIS, CYLINDER COMBUSTION PRESSURE LEAKAGE TEST	9-7
DIAGNOSIS, DISCONNECT AXLE/SHIFT MOTOR	2-29
DIAGNOSIS, ENGINE	9-5
DIAGNOSIS, ENGINE CYLINDER HEAD GASKET FAILURE	9-5
DIAGNOSIS, EXHAUST SYSTEM	11-2
DIAGNOSIS, FOG LAMP	8L-21,8L-3
DIAGNOSIS, GEAR LEAKAGE	19-10
DIAGNOSIS, HEADLAMP	8L-20,8L-2
DIAGNOSIS, HEATER	24-17
DIAGNOSIS, HEATING SYSTEM	24-18
DIAGNOSIS, IGNITION SECONDARY CIRCUIT	8D-10
DIAGNOSIS INFORMATION, GENERAL; CLUTCH	6-3
DIAGNOSIS INFORMATION, GENERAL; TRANSMISSION AND TRANSFER CASE	21-176
DIAGNOSIS, INTAKE MANIFOLD LEAKAGE	9-5
DIAGNOSIS, MANUAL STEERING SYSTEM	19-38
DIAGNOSIS, MULTI-PORT FUEL INJECTION (MFI)—GENERAL	14-35
DIAGNOSIS, NP231 SERVICE	21-285
DIAGNOSIS, NP242 SERVICE	21-308
DIAGNOSIS, PERFORMANCE	24-14
DIAGNOSIS, POWER STEERING SYSTEM	19-3, 19-4,19-5,19-6,19-7,19-8,19-9
DIAGNOSIS, PUMP LEAKAGE	19-10
DIAGNOSIS, RADIO	8F-3
DIAGNOSIS, SERPENTINE DRIVE BELT	7-39
DIAGNOSIS, SERVICE; FRONT SUSPENSION AND AXLE	2-20
DIAGNOSIS, SERVICE; PROPELLER SHAFTS	16-3
DIAGNOSIS, SERVICE; REAR SUSPENSION AND AXLES	3-11
DIAGNOSIS, SERVICE; TRANSMISSION AND TRANSFER CASE	21-180,21-181,21-34,21-2
DIAGNOSIS, SERVICE BRAKE	5-4
DIAGNOSIS, SPRING AND SHOCK; FRONT SUSPENSION AND AXLE	2-13,2-15
DIAGNOSIS, SPRING AND SHOCK; REAR SUSPENSION AND AXLES	3-3,3-6
DIAGNOSIS, SPRING AND SHOCK ABSORBER	3-3,3-6
DIAGNOSIS, STARTER NOISE	8A-16
DIAGNOSIS, STARTING SYSTEM	8A-12
DIAGNOSIS, SUSPENSION AND STEERING SYSTEM	2-7
DIAGNOSIS, THERMOMETER	8C-2
DIAGNOSIS, TORQUE CONVERTER	21-86,21-87, 21-88
DIAGNOSIS, TRANSMISSION	21-78,21-79,21-80, 21-81,21-82,21-83,21-84,21-85
DIAGNOSIS, VIBRATION	22-10,22-11
DIAGNOSIS—LUBRICATION SERVICE	9-12
DIAGNOSIS—XJ, DOME/COURTESY LAMP TROUBLE	8L-16
DIAGNOSIS—XJ, HEADLAMP DELAY FUNCTION TROUBLE	8L-14
DIAGNOSIS—XJ, LIGHTED VANITY MIRROR TROUBLE	8L-16
DIAGNOSIS—YJ, DOME/COURTESY LAMP TROUBLE	8L-31
DIAGNOSTIC CONNECTOR, ABS	5-35,5-3
DIAGNOSTIC PROCEDURES—XJ	8L-1
DIAGNOSTIC PROCEDURES—YJ	8L-19
DIAGNOSTIC SYSTEM, USING ON-BOARD; BATTERY/STARTING/ CHARGING SYSTEMS DIAGNOSTICS	8A-22
DIAGNOSTIC SYSTEM, USING ON-BOARD; VEHICLE SPEED CONTROL SYSTEM	8H-5
DIAGNOSTIC TROUBLE CODE (DTC)	14-54
DIAGNOSTIC TROUBLE CODE, GENERATOR	8A-22
DIAGNOSTIC TROUBLE CODE, SPEED CONTROL	8H-5
DIAGNOSTICS (OBD), ON-BOARD; COOLING SYSTEM	7-4
DIAGNOSTICS (OBD), ON-BOARD; FUEL SYSTEM	14-51
DIAGNOSTICS, ON-BOARD	8D-15
DIAGRAM INDEX; AIR CONDITIONING/ HEATER (XJ)	8W-42-2

Description	Group-Page
DIAGRAM INDEX; AIR CONDITIONING/ HEATER (XJ-RHD)	8W-42-2
DIAGRAM INDEX; AIR CONDITIONING/ HEATER (YJ)	8W-42-1,8W-42-2
DIAGRAM INDEX; ANTI-LOCK BRAKES (XJ)	8W-32-3
DIAGRAM INDEX; ANTI-LOCK BRAKES (XJ-RHD)	8W-32-3
DIAGRAM INDEX; ANTI-LOCK BRAKES (YJ)	8W-32-2
DIAGRAM INDEX; CHARGING SYSTEM (XJ)	8W-20-1
DIAGRAM INDEX; CHARGING SYSTEM (XJ-RHD)	8W-20-1
DIAGRAM INDEX; CHARGING SYSTEM (YJ)	8W-20-1
DIAGRAM INDEX; FRONT LIGHTING (XJ)	8W-50-2
DIAGRAM INDEX; FRONT LIGHTING (XJ-RHD)	8W-50-3
DIAGRAM INDEX; FRONT LIGHTING (YJ)	8W-50-2
DIAGRAM INDEX; FUEL/IGNITION (YJ)	8W-30-5
DIAGRAM INDEX; FUSE/FUSE BLOCK (XJ)	8W-10-1
DIAGRAM INDEX; FUSE/FUSE BLOCK (XJ-RHD)	8W-10-1
DIAGRAM INDEX; FUSE/FUSE BLOCK (YJ)	8W-10-1
DIAGRAM INDEX; GROUND DISTRIBUTION (XJ)	8W-15-1
DIAGRAM INDEX; GROUND DISTRIBUTION (XJ-RHD)	8W-15-1
DIAGRAM INDEX; GROUND DISTRIBUTION (YJ)	8W-15-1
DIAGRAM INDEX; HEATED REAR WINDOW (XJ)	8W-48-1
DIAGRAM INDEX; HEATED REAR WINDOW (XJ-RHD)	8W-48-1
DIAGRAM INDEX; HEATED REAR WINDOW (YJ)	8W-48-1
DIAGRAM INDEX; HORN/CIGAR LIGHTER	8E-1
DIAGRAM INDEX; HORN/CIGAR LIGHTER (YJ)	8W-41-1
DIAGRAM INDEX; INSTRUMENT CLUSTER (XJ)	8W-40-1,8W-40-3
DIAGRAM INDEX; INSTRUMENT CLUSTER (XJ-RHD)	8W-40-3
DIAGRAM INDEX; INSTRUMENT CLUSTER (YJ)	8W-40-2
DIAGRAM INDEX; INTERIOR LIGHTING (XJ)	8W-44-2
DIAGRAM INDEX; INTERIOR LIGHTING (XJ-RHD)	8W-44-2
DIAGRAM INDEX; INTERIOR LIGHTING (YJ)	8W-44-2
DIAGRAM INDEX; OVERHEAD CONSOLE (XJ)	8W-49-1
DIAGRAM INDEX; OVERHEAD CONSOLE (XJ-RHD)	8W-49-1
DIAGRAM INDEX; POWER DISTRIBUTION (XJ)	8W-11-1
DIAGRAM INDEX; POWER DISTRIBUTION (XJ-RHD)	8W-11-1
DIAGRAM INDEX; POWER DISTRIBUTION (YJ)	8W-11-1
DIAGRAM INDEX; POWER DOOR LOCKS (XJ)	8W-61-1
DIAGRAM INDEX; POWER DOOR LOCKS (XJ-RHD)	8W-61-1
DIAGRAM INDEX; POWER MIRRORS (XJ)	8W-62-1
DIAGRAM INDEX; POWER MIRRORS (XJ-RHD)	8W-62-1
DIAGRAM INDEX; POWER SEAT (XJ)	8W-63-1
DIAGRAM INDEX; POWER SEAT (XJ-RHD)	8W-63-1
DIAGRAM INDEX; POWER WINDOWS (XJ)	8W-60-2
DIAGRAM INDEX; POWER WINDOWS (XJ-RHD)	8W-60-2
DIAGRAM INDEX; REAR LIGHTING (XJ)	8W-51-1
DIAGRAM INDEX; REAR LIGHTING (XJ-RHD)	8W-51-1
DIAGRAM INDEX; REAR LIGHTING (YJ)	8W-51-1
DIAGRAM INDEX; STARTING SYSTEM (XJ)	8W-21-1
DIAGRAM INDEX; STARTING SYSTEM (XJ-RHD)	8W-21-1
DIAGRAM INDEX; STARTING SYSTEM (YJ)	8W-21-1
DIAGRAM INDEX; TRAILER TOW (XJ)	8W-54-1
DIAGRAM INDEX; TRAILER TOW (XJ-RHD)	8W-54-1
DIAGRAM INDEX; TRANSMISSION CONTROLS (XJ)	8W-31-1
DIAGRAM INDEX; TRANSMISSION CONTROLS (XJ-RHD)	8W-31-1
DIAGRAM INDEX; TRANSMISSION CONTROLS (YJ)	8W-31-1
DIAGRAM INDEX; TURN SIGNALS (XJ)	8W-52-1
DIAGRAM INDEX; TURN SIGNALS (XJ-RHD)	8W-52-1
DIAGRAM INDEX; TURN SIGNALS (YJ)	8W-52-1
DIAGRAM INDEX; VEHICLE SPEED CONTROL (XJ)	8W-33-1
DIAGRAM INDEX; VEHICLE SPEED CONTROL (XJ-RHD)	8W-33-1
DIAGRAM INDEX; WIPERS (XJ)	8W-53-2
DIAGRAM INDEX; WIPERS (XJ-RHD)	8W-53-2
DIAGRAM INDEX; WIPERS (YJ)	8W-53-2
DIAGRAM INDEX; FUEL/IGNITION (XJ-RHD)	8W-30-5
DIAGRAM INDEX—2.5L ENGINE; FUEL/IGNITION (XJ)	8W-30-6
DIAGRAM INDEX—4.0L ENGINE; FUEL/IGNITION (XJ)	8W-30-6
DIFFERENTIAL AND PINION MEASUREMENT	2-40
DIFFERENTIAL ASSEMBLY; FRONT SUSPENSION AND AXLE	2-38
DIFFERENTIAL ASSEMBLY; REAR SUSPENSION AND AXLES	3-21
DIFFERENTIAL DISASSEMBLY; FRONT SUSPENSION AND AXLE	2-35
DIFFERENTIAL DISASSEMBLY; REAR SUSPENSION AND AXLES	3-18
DIFFERENTIAL INSTALLATION	2-44
DIFFERENTIAL, LIMITED SLIP	3-10
DIFFERENTIAL MEASUREMENT AND INSTALLATION	3-25
DIFFERENTIAL OVERHAUL	3-46
DIFFERENTIAL REMOVAL; FRONT SUSPENSION AND AXLE	2-34
DIFFERENTIAL REMOVAL; REAR SUSPENSION AND AXLES	3-18
DIFFERENTIAL SERVICE	3-34
DIFFERENTIAL SHIM PACK MEASUREMENT AND ADJUSTMENT	2-43
DIFFERENTIAL, TRAC-LOK	3-45
DIMENSION DATA, VEHICLE	Intro.-5,Intro.-6
DIMENSIONS, AW-4 VALVE BODY CHECK BALL	21-341
DIMENSIONS, DESIGNATIONS, LABELS/PLATES, CODES	Intro.-1
DIMENSIONS, FRAME	13-13,13-1
DIMMER SWITCH REMOVE/INSTALL, HEADLAMP OR PANEL	8E-42
DIMMER SWITCH REPLACEMENT—YJ, HEADLAMP	8L-26
DIMMING MODULE; FRONT LIGHTING (XJ-RHD)	8W-50-1
DIODE REPLACEMENT; WIRING DIAGRAMS—GENERAL INFORMATION (XJ)	8W-8
DIRECT CLUTCH OVERHAUL	21-228
DISASSEMBLY AND INSPECTION, VALVE BODY	21-147
DISASSEMBLY AND OVERHAUL, TRANSFER CASE	21-289,21-310
DISASSEMBLY AND OVERHAUL, TRANSMISSION	21-37,21-5
DISASSEMBLY, CALIPER	5-48
DISASSEMBLY, DIFFERENTIAL; FRONT SUSPENSION AND AXLE	2-35
DISASSEMBLY, DIFFERENTIAL; REAR SUSPENSION AND AXLES	3-18
DISASSEMBLY, TRANSMISSION	21-119,21-201
DISASSEMBLY—COLUMN OR CONSOLE SHIFT	19-60
DISC AND PLATE THICKNESS, AW-4 CLUTCH	21-338
DISC BRAKE ROTOR REFINISHING	5-53
DISC BRAKE ROTOR RUNOUT	5-52
DISC BRAKE ROTOR THICKNESS	5-52
DISC BRAKES	5-45
DISC BRAKESHOE INSTALLATION	5-47
DISC BRAKESHOE REMOVAL	5-46
DISC INSTALLATION, CLUTCH COVER	6-10
DISC REMOVAL, CLUTCH COVER	6-10
DISC RUNOUT, CLUTCH COVER	6-3
DISCHARGE (ESD) SENSITIVE DEVICES, ELECTROSTATIC; WIRING DIAGRAMS—GENERAL INFORMATION (XJ)	8W-2
DISCONNECT AXLE—YJ VEHICLES, VACUUM	2-27
DISCONNECT AXLE/SHIFT MOTOR DIAGNOSIS	2-29
DISCONNECT AXLE/SHIFT MOTOR DIAGNOSIS (CONT'D)	2-30
DISPLAY, ABS WARNING LIGHT	5-3
DISPLAY SYMBOLS, INTERNATIONAL VEHICLE CONTROL	Intro.-5
DISPLAY SYMBOLS, VEHICLE CONTROL	Intro.-10
DISPOSAL—XJ, LIFTGATE SUPPORT ROD CYLINDER	23-63
DISTRIBUTOR	8D-19
DISTRIBUTOR CAP	8D-7
DISTRIBUTOR CAP AND ROTOR, IGNITION CABLES	0-20
DISTRIBUTOR ROTOR	8D-8
DISTRIBUTORS	8D-4
DOME LAMP, CARGO LAMP; INTERIOR LIGHTING (XJ-RHD)	8W-44-1
DOME LAMP, CARGO LAMP, COURTESY LAMPS; INTERIOR LIGHTING (XJ)	8W-44-1
DOME LAMP REPLACEMENT—XJ	8L-17
DOME LAMP—XJ	23-93
DOME LAMPS, COURTESY LAMPS; INTERIOR LIGHTING (YJ)	8W-44-1
DOME/CARGO LAMP BULB REPLACEMENT—YJ VEHICLES, HARDTOP	8L-31
DOME/COURTESY LAMP SERVICE INFORMATION—XJ	8L-16
DOME/COURTESY LAMP SERVICE INFORMATION—YJ	8L-31
DOME/COURTESY LAMP TROUBLE DIAGNOSIS—XJ	8L-16
DOME/COURTESY LAMP TROUBLE DIAGNOSIS—YJ	8L-31
DOOR ALIGNMENT ADJUSTMENT—MAJOR	23-41
DOOR ALIGNMENT ADJUSTMENT—MINOR	23-37
DOOR ASSIST HANDLE—YJ, FULL-METAL	23-136
DOOR BUMPERS—XJ, FUEL FILLER	23-27
DOOR CONTROL CABLES, VENT	24-32
DOOR EDGE GUARD/EDGE PROTECTOR STRIP—XJ	23-54
DOOR EXTERNAL HANDLE—XJ	23-48
DOOR FRAME GLASS CHANNEL REPLACEMENT—YJ	23-142
DOOR HINGE/HINGE PIN REPLACEMENT—XJ	23-52
DOOR HINGES—YJ, FULL-METAL	23-140
DOOR INSIDE LATCH RELEASE AND LOCK RODS—XJ	23-50
DOOR JAMB SWITCH, DRIVER'S	8U-1,8U-2
DOOR KEY LOCK CYLINDER—XJ	23-47
DOOR KEY LOCK CYLINDER—YJ, FULL-METAL	23-139
DOOR LATCH ADJUSTMENT—XJ	23-48
DOOR LATCH EXTERNAL RELEASE HANDLE—YJ, FULL-METAL	23-140
DOOR LATCH INSIDE RELEASE AND LOCK HANDLE—YJ, FULL-METAL	23-137
DOOR LATCH STRIKER—YJ, HALF-METAL	23-135
DOOR LATCH—XJ	23-49
DOOR LATCH—YJ, FULL-METAL	23-140
DOOR LOCKS, POWER; POWER DOOR LOCKS (XJ)	8W-61-1
DOOR LOCKS, POWER; POWER DOOR LOCKS (XJ-RHD)	8W-61-1
DOOR MIRROR (EXTERNAL)—YJ, HALF METAL	23-121
DOOR MOTOR SWITCH REPLACEMENT, BLOWER MOTOR/AIR	24-32
DOOR OPENER STORAGE, REMOTE GARAGE	8C-1
DOOR OPENING WEATHERSTRIP SEALS—XJ, DOOR WINDOW GLASS	23-55

Description	Group-Page
DOOR REMOVAL/INSTALLATION—XJ	23-35
DOOR RESTRAINT REPLACEMENT—XJ	23-41
DOOR SERVICE—YJ, FULL-METAL	23-142
DOOR SPACER BLOCKS—TWO-DOOR VEHICLES, FRONT	23-53
DOOR STATIONARY WINDOW GLASS—XJ, REAR	23-46
DOOR TRIM PANEL—XJ	23-31
DOOR TRIM PANEL—YJ, FULL-METAL	23-137
DOOR VACUUM MOTOR, FRESH AIR	24-34
DOOR VACUUM MOTOR REPLACEMENT, A/C RECIRCULATING	24-27
DOOR VENT WINDOW GLASS—YJ, FULL-METAL	23-137
DOOR WATERDAM—YJ, FULL-METAL	23-137
DOOR WEATHERSTRIP SEAL REPLACEMENT—YJ	23-142
DOOR WEATHERSTRIP SEALS—YJ, FULL-METAL	23-141
DOOR WINDOW EXTERIOR MOLDINGS—XJ	23-54
DOOR WINDOW GLASS AND DOOR OPENING WEATHERSTRIP SEALS—XJ	23-55
DOOR WINDOW GLASS REGULATOR HANDLE—YJ, FULL-METAL	23-136
DOOR WINDOW GLASS REGULATOR—XJ, FRONT	23-42
DOOR WINDOW GLASS REGULATOR—XJ, REAR	23-44
DOOR WINDOW GLASS REGULATOR—YJ, FULL-METAL	23-138
DOOR WINDOW GLASS—XJ, FRONT	23-43
DOOR WINDOW GLASS—XJ, REAR	23-45
DOOR WINDOW GLASS—YJ, FULL-METAL	23-139
DOOR—YJ, HALF-METAL SOFT TOP	23-134
DOUBLE CARDAN (CV)	16-11
DRAG LINK	19-16,19-20
DRAINING COOLING SYSTEM	7-21
DRAW FUSE, IGNITION-OFF	8F-1
DRAW, IGNITION-OFF	8A-10
DRB SCAN TOOL; BRAKES	5-3
DRB SCAN TOOL; COOLING SYSTEM	7-5
DRB SCAN TOOL; EMISSION CONTROL SYSTEMS	25-2
DRB SCAN TOOL; FUEL SYSTEM	14-54
DRB SCAN TOOL; IGNITION SYSTEMS	8D-8
DRIER—2.5L ENGINES, CONDENSER FILTER	24-27
DRIER—4.0L ENGINES, FILTER	24-28
DRIP RAIL MOLDING—XJ	23-25
DRIVE (4WD) SWITCH, FOUR-WHEEL; INSTRUMENT CLUSTER (XJ-RHD)	8W-40-2
DRIVE (4WD) SWITCH, FOUR-WHEEL; TRANSMISSION CONTROLS (XJ-RHD)	8W-31-1
DRIVE, AUTOMATIC BELT TENSIONER—XJ MODELS WITH RIGHT HAND	7-42
DRIVE AXLE ASSEMBLY REPLACEMENT—XJ VEHICLES; FRONT SUSPENSION AND AXLE	2-23
DRIVE AXLE ASSEMBLY REPLACEMENT—XJ VEHICLES; REAR SUSPENSION AND AXLES	3-14,3-31
DRIVE AXLE ASSEMBLY REPLACEMENT—YJ VEHICLES; FRONT SUSPENSION AND AXLE	2-24
DRIVE AXLE ASSEMBLY REPLACEMENT—YJ VEHICLES; REAR SUSPENSION AND AXLES	3-14
DRIVE AXLE, FRONT	2-3
DRIVE BELT, ACCESSORY	0-21
DRIVE BELT DIAGNOSIS (CONT.), SERPENTINE	7-40
DRIVE BELT DIAGNOSIS, SERPENTINE	7-39
DRIVE, BELT SERVICE—EXCEPT RIGHT HAND	7-40
DRIVE, BELT SERVICE—XJ MODELS WITH RIGHT HAND	7-42
DRIVE BELT TENSION	7-45
DRIVE BELTS, ENGINE ACCESSORY	7-38
DRIVE GEAR, SPEED SENSOR ROTOR—SPEEDOMETER	21-193
DRIVE, GENERATOR REMOVE/INSTALL—LEFT-HAND	8B-6
DRIVE, GENERATOR REMOVE/INSTALL—RIGHT-HAND	8B-7
DRIVE PULLEY REPLACEMENT	19-13
DRIVE (RHD), BELT TENSION—EXCEPT RIGHT HAND	7-38
DRIVE (RHD), BELT TENSION—RIGHT HAND	7-38
DRIVE (RHD) MODELS, BELT TENSION—EXCEPT RIGHT HAND	7-45
DRIVE SHAFTS	0-26
DRIVE VEHICLES, RIGHT HAND	23-1
DRIVE, VISCOUS FAN	7-34
DRIVELINE SNAP; FRONT SUSPENSION AND AXLE	2-19
DRIVELINE SNAP; REAR SUSPENSION AND AXLES	3-10
DRIVELINE VIBRATION	16-3
DRIVER'S DOOR JAMB SWITCH	8U-1,8U-2
DRIVER'S POWER LOCK SWITCH—2-DOOR (LHD)	8P-3
DRIVER'S POWER LOCK SWITCH—2-DOOR (RHD)	8P-4
DRIVER'S POWER LOCK SWITCH—4-DOOR	8P-5
DRIVER'S POWER WINDOW SWITCH—2-DOOR (LHD)	8S-4
DRIVER'S POWER WINDOW SWITCH—2-DOOR (RHD)	8S-5
DRIVER'S POWER WINDOW SWITCH—4-DOOR	8S-3
DRIVER'S SEAT BELT SWITCH	8U-1,8U-3
DRIVETRAIN	0-22
DRL MODULE REPLACEMENT—XJ	8L-15
DRL MODULE REPLACEMENT—YJ	8L-30
DRUM BRAKE ADJUSTMENT	5-57
DRUM BRAKES	5-55
DRUM BRAKESHOE INSTALLATION	5-55
DRUM BRAKESHOE REMOVAL	5-55
DRUM REFINISHING, BRAKE	5-58
DRUM—REAR SUPPORT OVERHAUL, OVERRUNNING CLUTCH—LOW-REVERSE	21-125
DUCT, DEFROSTER NOZZLE	24-33
DUCT, FRESH AIR INTAKE	24-34
ECU AND HCU DIAGNOSIS, ANTILOCK	5-3
ECU INSTALLATION (XJ MODELS)	5-40
ECU OPERATION	5-37
ECU REMOVAL (XJ MODELS)	5-40
ECU REMOVAL/INSTALLATION (YJ MODELS)	5-41
EDGE GUARD/EDGE PROTECTOR STRIP—XJ, DOOR	23-54
EFFECTS OF INCORRECT FLUID LEVEL	21-71
EFFORT, HARD PEDAL OR HIGH PEDAL	5-6
ELECTRIC COOLING FAN—XJ MODELS WITH 4.0L 6-CYLINDER ENGINE, AUXILIARY	7-35
ELECTRICAL CONTROL, FUEL PUMP	14-5
ELECTRONIC CONTROL UNIT (ECU)	5-34
ELECTROSTATIC DISCHARGE (ESD) SENSITIVE DEVICES; WIRING DIAGRAMS—GENERAL INFORMATION (XJ)	8W-2
ELEMENT, AIR CLEANER; EMISSION CONTROL SYSTEMS	25-7
ELEMENT, AIR CLEANER; FUEL SYSTEM	14-59
ELEMENT, AIR CLEANER; LUBRICATION AND MAINTENANCE	0-18
ELEMENT TEST, OXYGEN SENSOR (O2S) HEATING	14-48
ELEMENTS, HEATER; POWER MIRRORS (XJ-RHD)	8W-62-1
EMISSION CONTROL INFORMATION (VECI) LABEL, VEHICLE	25-1
EMISSION CONTROL SYSTEM	0-20
EMISSION CONTROL SYSTEM MAINTENANCE	0-4
EMISSION CONTROLS	25-4
EMR LAMP—PCM OUTPUT	14-27
ENGINE ACCESSORY DRIVE BELTS	7-38
ENGINE AND TRANSMISSION/TRANSFER CASE IDENTIFICATION	Intro.-5
ENGINE ASSEMBLY (SHORT BLOCK), SERVICE	9-4
ENGINE ASSEMBLY—XJ VEHICLES	9-18,9-59
ENGINE ASSEMBLY—YJ VEHICLES	9-20,9-62
ENGINE, AUXILIARY ELECTRIC COOLING FAN—XJ MODELS WITH 4.0L 6-CYLINDER	7-35
ENGINE BLOCK HEATER	7-44
ENGINE BREAK-IN	0-15
ENGINE COOLANT TEMPERATURE GAUGE; INSTRUMENT CLUSTER (XJ)	8W-40-1
ENGINE COOLANT TEMPERATURE SENSOR; FUEL SYSTEM	14-60
ENGINE COOLANT TEMPERATURE SENSOR; FUEL/IGNITION (XJ)	8W-30-3
ENGINE COOLANT TEMPERATURE SENSOR; FUEL/IGNITION (YJ)	8W-30-3
ENGINE COOLANT TEMPERATURE SENSOR; IGNITION SYSTEMS	8D-19,8D-5
ENGINE COOLANT TEMPERATURE SENSOR; FUEL/IGNITION (XJ-RHD)	8W-30-3
ENGINE COOLANT TEMPERATURE SENSOR TEST; FUEL SYSTEM	14-46
ENGINE COOLANT TEMPERATURE SENSOR TEST; IGNITION SYSTEMS	8D-9
ENGINE COOLANT TEMPERATURE SENSOR—PCM INPUT	14-23
ENGINE COOLANT TEMPERATURE WARNING LAMP; INSTRUMENT CLUSTER (XJ)	8W-40-1
ENGINE COOLANT TEMPERATURE WARNING LAMP; INSTRUMENT CLUSTER (XJ-RHD)	8W-40-1
ENGINE COOLING SYSTEM	0-18
ENGINE CYLINDER HEAD	9-25,9-67
ENGINE CYLINDER HEAD COVER	9-22,9-64
ENGINE CYLINDER HEAD GASKET FAILURE DIAGNOSIS	9-5
ENGINE DAMPER	9-17
ENGINE DIAGNOSIS	9-5
ENGINE, DIAGRAM INDEX—2.5L; FUEL/IGNITION (XJ)	8W-30-6
ENGINE, DIAGRAM INDEX—4.0L; FUEL/IGNITION (XJ)	8W-30-6
ENGINE, ENGINE EXHAUST MANIFOLD—2.5L	11-7
ENGINE, ENGINE EXHAUST MANIFOLD—4.0L	11-7
ENGINE, ENGINE FIRING ORDER—2.5L 4-CYLINDER	8D-32
ENGINE, ENGINE FIRING ORDER—4.0L 6-CYLINDER	8D-32
ENGINE EXHAUST MANIFOLD—2.5L ENGINE	11-7
ENGINE EXHAUST MANIFOLD—4.0L ENGINE	11-7
ENGINE FIRING ORDER—2.5L 4-CYLINDER ENGINE	8D-32
ENGINE FIRING ORDER—4.0L 6-CYLINDER ENGINE	8D-32
ENGINE, INTAKE MANIFOLD—2.5L	11-7
ENGINE, INTAKE MANIFOLD—4.0L	11-8
ENGINE MAINTENANCE	0-15
ENGINE MOUNT—REAR	9-16,9-57
ENGINE MOUNTS—FRONT	9-14,9-56
ENGINE OIL	0-15
ENGINE OIL CHANGE AND FILTER REPLACEMENT	0-16
ENGINE OIL FILTER	0-17
ENGINE OIL PRESSURE	9-7
ENGINE ONLY, POWER STEERING PRESSURE SWITCH—2.5L	14-63
ENGINE ONLY, TORQUE CONVERTER CLUTCH (TCC) SOLENOID AND RELAY—2.5L; TRANSMISSION CONTROLS (XJ)	8W-31-1
ENGINE ONLY, TRANSMISSION CONTROL MODULE—4.0L; TRANSMISSION CONTROLS (XJ)	8W-31-1
ENGINE PERFORMANCE	9-2
ENGINE SERVICE PROCEDURES, 2.5L	9-13
ENGINE SERVICE PROCEDURES, 4.0L	9-55
ENGINE SPECIFICATIONS	9-52,9-93
ENGINE, VACUUM ROUTING SCHEMATIC—2.5L 4 CYLINDER	25-3
ENGINE, VACUUM ROUTING SCHEMATIC—4.0L 6 CYLINDER	25-3
ENGINES, CONDENSER FILTER DRIER—2.5L	24-27
ENGINES, CONDENSER—4.0L	24-28
ENGINES, FILTER DRIER—4.0L	24-28
ENGINES, FUEL USAGE STATEMENT—GAS	0-19
ENGLISH/SAE CONVERSION, METRIC	Intro.-11
ENTRY MODULE, KEYLESS	8P-1,8P-7
ENTRY MODULE, REMOTE KEYLESS; POWER DOOR LOCKS (XJ)	8W-61-1

Description	Group-Page
ENTRY MODULE REMOVE/INSTALL, KEYLESS	8P-10
ENTRY RECEIVER, KEYLESS	8C-1
ENTRY RECEIVER—XJ, KEYLESS	23-93
ENTRY TRANSMITTER, KEYLESS	8P-1,8P-7,8P-8
EQUIPMENT, REFRIGERANT	24-7
EQUIVALENT VALUES, CONVERSION FORMULAS	Intro.-11
EVACUATING REFRIGERANT SYSTEM	24-11
EVAP CANISTER	25-4,25-7
EVAP (EVAPORATION) CONTROL SYSTEM	25-4
EVAPORATIVE HOUSING COMPONENTS—YJ	24-6
EVAPORATOR AND HOUSING	24-35
EVAPORATOR COIL	24-30
EVAPORATOR/BLOWER HOUSING	24-29
EXHAUST GAS RECIRCULATION (EGR) SYSTEM	25-1
EXHAUST GRILLE—XJ, AIR	23-25
EXHAUST HEAT SHIELDS	11-1
EXHAUST MANIFOLD—2.5L ENGINE, ENGINE	11-7
EXHAUST MANIFOLD—4.0L ENGINE, ENGINE	11-7
EXHAUST PIPE—XJ VEHICLES	11-3
EXHAUST PIPE—YJ VEHICLES	11-4
EXHAUST SYSTEM; EXHAUST SYSTEM AND INTAKE MANIFOLD	11-1
EXHAUST SYSTEM; LUBRICATION AND MAINTENANCE	0-21
EXHAUST SYSTEM DIAGNOSIS	11-2
EXHAUST TAILPIPE—XJ VEHICLES, MUFFLER	11-5
EXHAUST TAILPIPE—YJ VEHICLES, MUFFLER	11-6
EXPANSION VALVE	24-31,24-35
EXTENDED IDLE SWITCH; FUEL/IGNITION (XJ)	8W-30-5
EXTENDED IDLE SWITCH TEST	14-48
EXTENDED IDLE SWITCH—PCM INPUT	14-23
EXTENSION—XJ, QUARTER TRIM PANEL	23-87
EXTERIOR COMPONENTS	23-104,23-3
EXTERIOR LAMPS—XJ	8L-18
EXTERIOR LAMPS—YJ	8L-32
EXTERIOR MOLDINGS—XJ, DOOR WINDOW	23-54
EXTERIOR NAMEPLATES (ADHESIVE-BACKED)—YJ	23-120
EXTERIOR NAMEPLATES—XJ	23-26
EXTERNAL HANDLE—XJ, DOOR	23-48
EXTERNAL MIRRORS—XJ	23-27
EXTERNAL RELEASE HANDLE—YJ, FULL-METAL DOOR LATCH	23-140
EXTERNAL SPARE/WHEEL TIRE CARRIER—YJ	23-133
(EXTERNAL)—YJ, HALF METAL DOOR MIRROR	23-121
EYE BUSHING REPLACEMENT, LEAF SPRING; FRONT SUSPENSION AND AXLE	2-17
EYE BUSHING REPLACEMENT, LEAF SPRING; REAR SUSPENSION AND AXLES	3-5,3-7
FAN RELAY AND MOTOR, RADIATOR; AIR CONDITIONING/HEATER (XJ)	8W-42-2
FAN RELAY AND MOTOR, RADIATOR; AIR CONDITIONING/HEATER (XJ-RHD)	8W-42-2
FAN RELAY—PCM OUTPUT, RADIATOR	14-28
FAN—XJ MODELS WITH 4.0L 6-CYLINDER ENGINE, AUXILIARY ELECTRIC COOLING	7-35
FANS, COOLING SYSTEM	7-32
FEED, BATTERY; FUEL/IGNITION (XJ)	8W-30-1
FEED, BATTERY; FUEL/IGNITION (YJ)	8W-30-2
FEED, BATTERY; FUEL/IGNITION (XJ-RHD)	8W-30-1
FEED, IGNITION; FUEL/IGNITION (XJ-RHD)	8W-30-1
FENDER FLARE—YJ	23-114
FENDER INNER SPLASH SHIELDS—YJ	23-116
FENDER SPLASH APRONS—YJ	23-115
FENDER—XJ, FRONT	23-14
FENDERS—YJ	23-110
FIELD—PCM OUTPUT, GENERATOR	14-27
FILL LEVEL, TRANSFER CASE LUBRICANT	21-284
FILLER DOOR BUMPERS—XJ, FUEL	23-27
FILLER HOSE SPLASH SHIELD—XJ VEHICLES, FUEL	13-4
FILLER NOZZLE/TUBE—XJ, FUEL	23-26
FILLER PROTECTOR/NOZZLE—YJ, FUEL	23-121
FILLER TUBE CAP, FUEL TANK; EMISSION CONTROL SYSTEMS	25-4,25-7
FILLER TUBE CAP, FUEL TANK; FUEL SYSTEM	14-13
FILLER TUBE, NO-LEAD FUEL TANK	14-13
FILTER DRIER—2.5L ENGINES, CONDENSER	24-27
FILTER DRIER—4.0L ENGINES	24-28
FILTER, ENGINE OIL	0-17
FILTER, FUEL; FUEL SYSTEM	14-60,14-9
FILTER, FUEL; LUBRICATION AND MAINTENANCE	0-19
FILTER REPLACEMENT, ENGINE OIL CHANGE	0-16
FILTER REPLACEMENT, FLUID	21-99
FILTER REPLACEMENT, OIL	21-103
FIN SENSING CYCLING CLUTCH SWITCH	24-15, 24-31
FINAL ASSEMBLY; FRONT SUSPENSION AND AXLE	2-46
FINAL ASSEMBLY; REAR SUSPENSION AND AXLES	3-29
FIRING ORDER—2.5L 4-CYLINDER ENGINE, ENGINE	8D-32
FIRING ORDER—4.0L 6-CYLINDER ENGINE, ENGINE	8D-32
FIRST-REVERSE BRAKE PISTON AND TRANSMISSION CASE OVERHAUL	21-247
FIRST/SECOND/THIRD/REVERSE COMPONENTS	21-168
FITTING CHART, CONNECTING ROD BEARING	9-41,9-83
FITTING CHART, MAIN BEARING	9-48,9-90
FITTING O-RING SEAL, FLOW CONTROL VALVE	19-14
FITTING SERVICE, TRANSMISSION COOLER LINE	21-111
FITTINGS, TRANSMISSION COOLER LINE	21-197
FLARE—YJ, FENDER	23-114
FLARES AND LINERS—XJ, REAR WHEELHOUSE	23-19
FLASHER, COMBINATION; TURN SIGNALS (XJ)	8W-52-1
FLASHERS, HAZARD; TURN SIGNALS (XJ)	8W-52-1
FLASHERS, HAZARD; TURN SIGNALS (XJ-RHD)	8W-52-1
FLASHERS, HAZARD; TURN SIGNALS (YJ)	8W-52-1
FLOOR BRACKETS—XJ, SPARE TIRE/WHEEL HOLDDOWN	23-98
FLOOR CONSOLE—XJ, FULL	23-95
FLOOR CONSOLES—YJ	23-155
FLOOR MATS—XJ, CARPETS	23-99
FLOOR SHIFT—XJ, MINI-CONSOLE WITH	23-94
FLOW CONTROL VALVE FITTING O-RING SEAL	19-14
FLOW TESTING, TRANSMISSION COOLER	21-113
FLUID AND FILTER REPLACEMENT	21-99
FLUID CAPACITIES	0-3
FLUID, CLUTCH LINKAGE	6-1
FLUID CONTAMINATION, BRAKE	5-10,5-7
FLUID LEVEL AND CONDITION, CHECKING	21-182
FLUID LEVEL, BRAKE	5-10
FLUID LEVEL CHECK	21-70,21-99
FLUID LEVEL, CLUTCH	6-14
FLUID, RECOMMENDED BRAKE	5-10
FLUID WARNING LAMP, LOW WASHER; INSTRUMENT CLUSTER (XJ)	8W-40-2
FLUID WARNING LAMP, LOW WASHER; INSTRUMENT CLUSTER (XJ-RHD)	8W-40-2
FLUID/FILTER CHANGE, REFILLING AFTER OVERHAUL OR	21-100,21-182
FLUID/LUBRICANTS/CLEANING SOLVENTS, BRAKE	5-2
FLUID—BRAKE BLEEDING—BRAKELINES AND HOSES, BRAKE	5-10
FLUSHING, COOLING SYSTEM CLEANING/REVERSE	7-22
FLUSHING, TRANSMISSION COOLER REVERSE	21-114
FLYWHEEL RUNOUT	6-3
FLYWHEEL SERVICE	6-16
FOG LAMP DIAGNOSIS	8L-21,8L-3
FOG LAMP REPLACEMENT—XJ	8L-9
FOG LAMP REPLACEMENT—YJ	8L-25
FOG LAMP SWITCH REPLACEMENT—XJ	8L-10
FOG LAMP SWITCH REPLACEMENT—YJ	8L-26
FOG LAMPS; FRONT LIGHTING (XJ)	8W-50-1
FOG LAMPS; FRONT LIGHTING (XJ-RHD)	8W-50-2
FOG LAMPS; FRONT LIGHTING (YJ)	8W-50-1
FOG LAMPS—XJ	8L-7
FOG LAMPS—YJ	8L-23
FORM-IN-PLACE GASKETS	9-1
FORMULAS AND EQUIVALENT VALUES, CONVERSION	Intro.-11
FORWARD CLUTCH OVERHAUL	21-232
FOURTH GEAR OVERDRIVE COMPONENTS	21-167
FOUR-WHEEL DRIVE (4WD) SWITCH; INSTRUMENT CLUSTER (XJ-RHD)	8W-40-2
FOUR-WHEEL DRIVE (4WD) SWITCH; TRANSMISSION CONTROLS (XJ-RHD)	8W-31-1
FOUR-WHEEL-DRIVE VEHICLE TOWING	0-12
FRAME	13-10,13-1
FRAME CROSSMEMBER COVER	13-16
FRAME DIMENSIONS	13-13,13-1
FRAME GLASS CHANNEL REPLACEMENT—YJ, DOOR	23-142
FRAME REPAIRS	13-13
FRAME STRAIGHTENING	13-13
FRAME WEATHERSTRIP SEAL—YJ, WINDSHIELD	23-146
FRAME—XJ, BUCKET SEATBACK COVER	23-81
FRAME—YJ, WINDSHIELD	23-145
FREQUENCY INTERFERENCE, RADIO	8F-5
FRESH AIR DOOR VACUUM MOTOR	24-34
FRESH AIR INTAKE DUCT	24-34
FRONT AND REAR AXLES	0-24
FRONT AXLE, MODEL 30	2-49
FRONT BUCKET SEATS—XJ	23-81
FRONT BUMPER	13-16,13-5
FRONT CABLE REPLACEMENT (YJ), PARKING BRAKE	5-67
FRONT CARPET/MAT—XJ	23-99
FRONT CLUTCH OVERHAUL	21-134
FRONT DOOR SPACER BLOCKS—TWO-DOOR VEHICLES	23-53
FRONT DOOR WINDOW GLASS REGULATOR—XJ	23-42
FRONT DOOR WINDOW GLASS—XJ	23-43
FRONT DRIVE AXLE	2-3
FRONT FENDER—XJ	23-14
FRONT INNER SCUFF PLATE/COWL SIDE TRIM PANEL—XJ	23-86
FRONT PARK/TURN SIGNAL LAMP BULB REPLACEMENT—XJ	8L-9
FRONT PARK/TURN SIGNAL LAMP BULB REPLACEMENT—YJ	8L-25
FRONT PLANETARY GEAR OVERHAUL	21-237
FRONT SERVO AND BAND OVERHAUL	21-146
FRONT SHOULDER BELT/BUCKLE—XJ	23-90
FRONT SHOULDER BELTS—YJ	23-154
FRONT SKID PLATE	13-1
FRONT SUSPENSION	2-1
FRONT SUSPENSION COMPONENTS, XJ	2-49
FRONT SUSPENSION COMPONENTS, YJ	2-49
FRONT SUSPENSION, XJ	2-11
FRONT SUSPENSION, YJ	2-15
FRONT TOW HOOKS	13-7
FRONT WHEEL ALIGNMENT	2-5
FRONT WHEEL BEARINGS	0-28
FRONT WHEEL SENSOR INSTALLATION	5-38
FRONT WHEEL SENSOR REMOVAL	5-38
FUEL DELIVERY SYSTEM	14-3
FUEL FILLER DOOR BUMPERS—XJ	23-27
FUEL FILLER HOSE SPLASH SHIELD—XJ VEHICLES	13-4
FUEL FILLER NOZZLE/TUBE—XJ	23-26
FUEL FILLER PROTECTOR/NOZZLE—YJ	23-121
FUEL FILTER; FUEL SYSTEM	14-60,14-9
FUEL FILTER; LUBRICATION AND MAINTENANCE	0-19
FUEL GAUGE; INSTRUMENT CLUSTER (XJ)	8W-40-1
FUEL GAUGE; INSTRUMENT CLUSTER (XJ-RHD)	8W-40-1
FUEL GAUGE SENDING UNIT	14-16

Description	Group-Page
FUEL INJECTION (MFI)—COMPONENT DESCRIPTION/SYSTEM OPERATION, MULTI-PORT	14-19
FUEL INJECTION (MFI)—COMPONENT REMOVAL/INSTALLATION, MULTI-PORT	14-58
FUEL INJECTION (MFI)—GENERAL DIAGNOSIS, MULTI-PORT	14-35
FUEL INJECTOR	14-60
FUEL INJECTOR TEST	14-51
FUEL INJECTORS; FUEL/IGNITION (XJ)	8W-30-1
FUEL INJECTORS; FUEL/IGNITION (YJ)	8W-30-2
FUEL INJECTORS; FUEL/IGNITION (XJ-RHD)	8W-30-1
FUEL INJECTORS—PCM OUTPUT	14-27
FUEL PRESSURE LEAK DOWN TEST	14-8
FUEL PRESSURE REGULATOR	14-33,14-61
FUEL PRESSURE RELEASE PROCEDURE	14-6
FUEL PUMP CAPACITY TEST	14-7
FUEL PUMP ELECTRICAL CONTROL	14-5
FUEL PUMP MODULE; FUEL SYSTEM	14-61, 14-3
FUEL PUMP MODULE; FUEL/IGNITION (XJ)	8W-30-2
FUEL PUMP MODULE; FUEL/IGNITION (YJ)	8W-30-2
FUEL PUMP MODULE; FUEL/IGNITION (XJ-RHD)	8W-30-2
FUEL PUMP RELAY; FUEL SYSTEM	14-61
FUEL PUMP RELAY; FUEL/IGNITION (XJ)	8W-30-2
FUEL PUMP RELAY; FUEL/IGNITION (YJ)	8W-30-2
FUEL PUMP RELAY; FUEL/IGNITION (XJ-RHD)	8W-30-2
FUEL PUMP RELAY TESTING	14-47
FUEL PUMP RELAY—PCM OUTPUT	14-27
FUEL RAIL	14-33
FUEL RAIL ASSEMBLY	14-62
FUEL REQUIREMENTS	0-1
FUEL SYSTEM	14-67
FUEL SYSTEM PRESSURE RELEASE PROCEDURE	14-62
FUEL SYSTEM PRESSURE TEST	14-51,14-6
FUEL TANK	14-13
FUEL TANK CAPACITIES	14-13,14-67
FUEL TANK FILLER TUBE CAP; EMISSION CONTROL SYSTEMS	25-4,25-7
FUEL TANK FILLER TUBE CAP; FUEL SYSTEM	14-13
FUEL TANK FILLER TUBE, NO-LEAD	14-13
FUEL TANK PRESSURE RELIEF/ ROLLOVER VALVE	14-16,14-62
FUEL TANK SKID PLATE	13-15,13-3
FUEL TANK SUPPORT STRAP	13-4
FUEL TANKS	14-13,14-62
FUEL TUBES/LINES/HOSES AND CLAMPS	14-62, 14-9
FUEL USAGE STATEMENT	14-1
FUEL USAGE STATEMENT—GAS ENGINES	0-19
FUEL WARNING LAMP, LOW; INSTRUMENT CLUSTER (XJ)	8W-40-1
FULL FLOOR CONSOLE—XJ	23-95
FULL-METAL DOOR ASSIST HANDLE—YJ	23-136
FULL-METAL DOOR HINGES—YJ	23-140
FULL-METAL DOOR KEY LOCK CYLINDER—YJ	23-139
FULL-METAL DOOR LATCH EXTERNAL RELEASE HANDLE—YJ	23-140
FULL-METAL DOOR LATCH INSIDE RELEASE AND LOCK HANDLE—YJ	23-137
FULL-METAL DOOR LATCH—YJ	23-140
FULL-METAL DOOR SERVICE—YJ	23-142
FULL-METAL DOOR TRIM PANEL—YJ	23-137
FULL-METAL DOOR VENT WINDOW GLASS—YJ	23-137
FULL-METAL DOOR WATERDAM—YJ	23-137
FULL-METAL DOOR WEATHERSTRIP SEALS—YJ	23-141
FULL-METAL DOOR WINDOW GLASS REGULATOR HANDLE—YJ	23-136
FULL-METAL DOOR WINDOW GLASS REGULATOR—YJ	23-138
FULL-METAL DOOR WINDOW GLASS—YJ	23-139
FUNCTION TROUBLE DIAGNOSIS—XJ, HEADLAMP DELAY	8L-14
FUSE, IGNITION-OFF DRAW	8F-1
FUSE, IN-LINE	8F-1
GAP, SPEED SENSOR AIR	5-37
GARAGE DOOR OPENER STORAGE, REMOTE	8C-1
GAS RECIRCULATION (EGR) SYSTEM, EXHAUST	25-1
GASKET FAILURE DIAGNOSIS, ENGINE CYLINDER HEAD	9-5
GASKETS, FORM-IN-PLACE	9-1
GAUGE CLUSTER, 9 X 3.5	8E-23
GAUGE CLUSTER (LHD), HIGH-LINE	8E-9
GAUGE CLUSTER, LOW-LINE	8E-8
GAUGE, ENGINE COOLANT TEMPERATURE; INSTRUMENT CLUSTER (XJ)	8W-40-1
GAUGE, FUEL; INSTRUMENT CLUSTER (XJ)	8W-40-1
GAUGE, FUEL; INSTRUMENT CLUSTER (XJ-RHD)	8W-40-1
GAUGE HOUSINGS—YJ, INSTRUMENT CLUSTER	23-151
GAUGE, OIL PRESSURE; INSTRUMENT CLUSTER (XJ)	8W-40-2
GAUGE PACKAGE CLUSTER	8E-31,8E-43
GAUGE SENDING UNIT, FUEL	14-16
GAUGE SET, MANIFOLD	24-7
GAUGES	8E-24,8E-27,8E-2,8E-5
GAUGES, PRESSURE	22-2
GAUGES REMOVE/INSTALL	8E-17,8E-39
GAUGES—YJ, INSTRUMENT PANEL	8E-24
GEAR ADJUSTMENTS IN VEHICLE	19-39
GEAR ADJUSTMENTS ON BENCH	19-44
GEAR ADJUSTMENTS, STEERING	19-24
GEAR AND BEARING NOISE; FRONT SUSPENSION AND AXLE	2-18
GEAR AND BEARING NOISE; REAR SUSPENSION AND AXLES	3-9
GEAR AND CLUTCH OVERHAUL, OVERDRIVE PLANETARY	21-218
GEAR AND NO. 1 ONE-WAY CLUTCH OVERHAUL, SUN	21-238
GEAR ASSEMBLY	19-43
GEAR ASSEMBLY/INSTALLATION, PINION	2-42
GEAR CLEANING AND INSPECTION	19-42
GEAR DEPTH INFORMATION, PINION; FRONT SUSPENSION AND AXLE	2-39
GEAR DEPTH INFORMATION, PINION; REAR SUSPENSION AND AXLES	3-21
GEAR DEPTH VARIANCE, PINION; FRONT SUSPENSION AND AXLE	2-40
GEAR DEPTH VARIANCE, PINION; REAR SUSPENSION AND AXLES	3-22,3-39
GEAR DISASSEMBLY	19-39
GEAR DISASSEMBLY INFORMATION	19-26
GEAR LEAKAGE DIAGNOSIS	19-10
GEAR, MANUAL STEERING; LUBRICATION AND MAINTENANCE	0-30
GEAR, MANUAL STEERING; STEERING	19-37, 19-78
GEAR OVERDRIVE COMPONENTS, FOURTH	21-167
GEAR OVERHAUL, FRONT PLANETARY	21-237
GEAR OVERHAUL, GOVERNOR AND PARK	21-127
GEAR, POWER STEERING	19-78
GEAR RATIOS	21-2
GEAR RATIOS, TRANSMISSION	21-34
GEAR, RECIRCULATING BALL POWER STEERING	19-21
GEAR REPLACEMENT, STEERING	19-23,19-45
GEAR SERVICE, GOVERNOR AND PARK	21-105
GEAR SPECIFICATIONS, MANUAL STEERING	19-46
GEAR SPECIFICATIONS, POWER STEERING	19-36
GEAR, SPEED SENSOR ROTOR—SPEEDOMETER DRIVE	21-193
GEAR TRAIN OVERHAUL, PLANETARY	21-141
GEARS, RECIRCULATING-BALL POWER STEERING	19-74
GEARSHIFT CABLE/LINKAGE ADJUSTMENT	21-71
GEARTRAIN OPERATION AND APPLICATION CHARTS	21-169
GENERAL BODY SERVICE INFORMATION	23-1
GENERAL DIAGNOSIS INFORMATION; CLUTCH	6-3
GENERAL DIAGNOSIS INFORMATION; TRANSMISSION AND TRANSFER CASE	21-176
GENERAL INFORMATION; AIR CONDITIONING/HEATER (XJ)	8W-42-1
GENERAL INFORMATION; AIR CONDITIONING/HEATER (XJ-RHD)	8W-42-1
GENERAL INFORMATION; AIR CONDITIONING/HEATER (YJ)	8W-42-1,8W-42-2
GENERAL INFORMATION; ANTI-LOCK BRAKES (XJ)	8W-32-1
GENERAL INFORMATION; ANTI-LOCK BRAKES (XJ-RHD)	8W-32-1
GENERAL INFORMATION; ANTI-LOCK BRAKES (YJ)	8W-32-1
GENERAL INFORMATION; AUDIO SYSTEMS	8F-1
GENERAL INFORMATION; BATTERY/ STARTER/GENERATOR SERVICE	8B-1,8B-4,8B-6
GENERAL INFORMATION; BATTERY/ STARTING/CHARGING SYSTEMS DIAGNOSTICS	8A-10,8A-11,8A-17,8A-22,8A-1, 8A-2
GENERAL INFORMATION; BRAKES	5-22,5-45, 5-1,5-3,5-4
GENERAL INFORMATION; CHIME/BUZZER WARNING SYSTEMS	8U-1
GENERAL INFORMATION; CLUTCH	6-1
GENERAL INFORMATION; CONNECTOR LOCATIONS (XJ)	8W-90-1
GENERAL INFORMATION; CONNECTOR LOCATIONS (XJ-RHD)	8W-90-1
GENERAL INFORMATION; CONNECTOR LOCATIONS (YJ)	8W-90-1
GENERAL INFORMATION; CONNECTOR PIN OUTS (XJ)	8W-80-1
GENERAL INFORMATION; CONNECTOR PIN OUTS (XJ-RHD)	8W-80-1
GENERAL INFORMATION; CONNECTOR PIN OUTS (YJ)	8W-80-1
GENERAL INFORMATION; COOLING SYSTEM	7-38,7-44,7-45,7-1
GENERAL INFORMATION; EMISSION CONTROL SYSTEMS	25-1
GENERAL INFORMATION; ENGINES	9-13,9-55, 9-5
GENERAL INFORMATION; EXHAUST SYSTEM AND INTAKE MANIFOLD	11-1
GENERAL INFORMATION; FRAME AND BUMPERS	13-10,13-1
GENERAL INFORMATION; FRONT SUSPENSION AND AXLE	2-18,2-1,2-5
GENERAL INFORMATION; FUEL SYSTEM	14-13, 14-17,14-19,14-35,14-67,14-1
GENERAL INFORMATION; FUSE/FUSE BLOCK (XJ)	8W-10-1
GENERAL INFORMATION; FUSE/FUSE BLOCK (XJ-RHD)	8W-10-1
GENERAL INFORMATION; GROUND DISTRIBUTION (XJ)	8W-15-1
GENERAL INFORMATION; GROUND DISTRIBUTION (XJ-RHD)	8W-15-1
GENERAL INFORMATION; GROUND DISTRIBUTION (YJ)	8W-15-1
GENERAL INFORMATION; HEATING AND AIR CONDITIONING	24-1
GENERAL INFORMATION; HORNS	8G-1
GENERAL INFORMATION; IGNITION SYSTEMS	8D-17,8D-29,8D-32,8D-1,8D-6
GENERAL INFORMATION; INSTRUMENT PANEL AND GAUGES—XJ	8E-24,8E-1
GENERAL INFORMATION; INTERIOR LIGHTING (XJ)	8W-44-1
GENERAL INFORMATION; INTERIOR LIGHTING (XJ-RHD)	8W-44-1
GENERAL INFORMATION; INTERIOR LIGHTING (YJ)	8W-44-1
GENERAL INFORMATION; LAMPS	8L-18,8L-19, 8L-32,8L-1
GENERAL INFORMATION; LUBRICATION AND MAINTENANCE	0-1
GENERAL INFORMATION; OVERHEAD CONSOLE	8C-1
GENERAL INFORMATION; POWER DISTRIBUTION (XJ)	8W-11-1
GENERAL INFORMATION; POWER DISTRIBUTION (XJ-RHD)	8W-11-1
GENERAL INFORMATION; POWER DISTRIBUTION (YJ)	8W-11-1

Description	Group-Page
GENERAL INFORMATION; POWER LOCKS	8P-1
GENERAL INFORMATION; POWER MIRRORS	8T-1
GENERAL INFORMATION; POWER SEATS	8R-1
GENERAL INFORMATION; POWER WINDOWS	8S-1
GENERAL INFORMATION; PROPELLER SHAFTS	16-1
GENERAL INFORMATION; REAR SUSPENSION AND AXLES	3-13,3-1,3-9
GENERAL INFORMATION; REAR WINDOW DEFOGGER	8N-1
GENERAL INFORMATION; RESTRAINT SYSTEMS	8M-1
GENERAL INFORMATION; SPLICE INFORMATION (XJ)	8W-70-1
GENERAL INFORMATION; SPLICE INFORMATION (XJ-RHD)	8W-70-1
GENERAL INFORMATION; SPLICE INFORMATION (YJ)	8W-70-1
GENERAL INFORMATION; SPLICE LOCATIONS (XJ)	8W-95-1
GENERAL INFORMATION; SPLICE LOCATIONS (XJ-RHD)	8W-95-1
GENERAL INFORMATION; SPLICE LOCATIONS (YJ)	8W-95-1
GENERAL INFORMATION; STEERING	19-48,19-1
GENERAL INFORMATION; TRANSMISSION AND TRANSFER CASE	21-165, 21-283,21-307,21-33,21-67,21-70,21-1
GENERAL INFORMATION; TURN SIGNAL AND HAZARD WARNING SYSTEMS	8J-1
GENERAL INFORMATION; VEHICLE SPEED CONTROL SYSTEM	8H-1
GENERAL INFORMATION; WHEELS AND TIRES	22-1,22-6
GENERAL INFORMATION - XJ	8K-1
GENERAL INFORMATION - YJ	8K-10
GENERAL SERVICE INFORMATION; BODY COMPONENTS—XJ VEHICLES	23-102
GENERAL SERVICE INFORMATION; BRAKES	5-15,5-60
GENERAL SERVICE—XJ, STEERING COLUMN	19-47
GENERAL SPECIFICATIONS, 30RH/32RH	21-335
GENERAL SPECIFICATIONS, AW-4	21-337
GENERATOR	8B-6
GENERATOR DIAGNOSTIC TROUBLE CODE	8A-22
GENERATOR FIELD—PCM OUTPUT	14-27
GENERATOR LAMP—PCM OUTPUT	14-27
GENERATOR RATINGS	8A-23
GENERATOR REMOVE/INSTALL—LEFT-HAND DRIVE	8B-6
GENERATOR REMOVE/INSTALL—RIGHT-HAND DRIVE	8B-7
GENERATOR SPECIFICATIONS	8B-8
GENERATOR SPLASH SHIELD	13-13
GLASS AND DOOR OPENING WEATHERSTRIP SEALS—XJ, DOOR WINDOW	23-55
GLASS CHANNEL REPLACEMENT—YJ, DOOR FRAME	23-142
GLASS GRID, REAR WINDOW	8N-1,8N-2
GLASS GRID REPAIRS, REAR WINDOW	8N-3
GLASS REGULATOR HANDLE—YJ, FULL-METAL DOOR WINDOW	23-136
GLASS REGULATOR—XJ, FRONT DOOR WINDOW	23-42
GLASS REGULATOR—XJ, REAR DOOR WINDOW	23-44
GLASS REGULATOR—YJ, FULL-METAL DOOR WINDOW	23-138
GLASS REPLACEMENT—XJ, WINDSHIELD	23-69
GLASS, STATIONARY	23-144
GLASS, STATIONARY WINDOW	23-66
GLASS WATER LEAK DETECTION AND REPAIR—XJ, STATIONARY	23-76
GLASS WATER LEAK DETECTION AND REPAIR—YJ, STATIONARY	23-150
GLASS WEATHERSTRIP SEAL REPLACEMENT—YJ, LIFTGATE	23-125
GLASS—XJ, FRONT DOOR WINDOW	23-43
GLASS—XJ, LIFTGATE WINDOW	23-74
GLASS—XJ, REAR DOOR STATIONARY WINDOW	23-46
GLASS—XJ, REAR DOOR WINDOW	23-45
GLASS—XJ, REAR QUARTER VENT WINDOW	23-73
GLASS—YJ, FULL-METAL DOOR VENT WINDOW	23-137
GLASS—YJ, FULL-METAL DOOR WINDOW	23-139
GLASS—YJ, HARD TOP LIFTGATE	23-124
GLASS—YJ, HARD TOP QUARTER WINDOW	23-149
GLASS—YJ, WINDSHIELD	23-146
GLASS/REAR QUARTER PLASTIC INSERT—XJ, REAR QUARTER WINDOW	23-73
GLOVE BOX LAMP; INTERIOR LIGHTING (XJ)	8W-44-1
GLOVE BOX LAMP; INTERIOR LIGHTING (XJ-RHD)	8W-44-1
GLOVE BOX—YJ	23-152
(GOP)—XJ, GRILLE AND GRILLE OPENING PANEL	23-3
GOVERNOR AND PARK GEAR OVERHAUL	21-127
GOVERNOR AND PARK GEAR SERVICE	21-105
GRAB, REAR BRAKE	5-7
GRID, REAR WINDOW GLASS	8N-1,8N-2
GRID REPAIRS, REAR WINDOW GLASS	8N-3
GRILLE AND GRILLE OPENING PANEL (GOP)—XJ	23-3
GRILLE AND SCREEN—XJ, COWL	23-12
GRILLE AND SCREEN—YJ, COWL	23-109
GRILLE APPLIQUE—YJ, RADIATOR	23-104
GRILLE OPENING PANEL (GOP)—XJ, GRILLE	23-3
GRILLE—XJ, AIR EXHAUST	23-25
GROUND CLEARANCE AND RAMP ANGLE	0-11
GROUND, CLUSTER; INSTRUMENT CLUSTER (XJ)	8W-40-3
GROUND, CLUSTER; INSTRUMENT CLUSTER (XJ-RHD)	8W-40-2
GROUND, POWER	14-24
GROUND, POWER (DEVICE); FUEL/IGNITION (XJ)	8W-30-5
GROUND, POWER (DEVICE); FUEL/IGNITION (YJ)	8W-30-5
GROUND, POWER (DEVICE); FUEL/IGNITION (XJ-RHD)	8W-30-5
GROUP, HOW TO USE THIS; WIRING DIAGRAMS (XJ)	8W-1
GROUP, HOW TO USE THIS; WIRING DIAGRAMS (XJ-RHD)	8W-1
GROUP, HOW TO USE THIS; WIRING DIAGRAMS (YJ)	8W-1
GUARD/EDGE PROTECTOR STRIP—XJ, DOOR EDGE	23-54
GUARD—XJ, BRUSH	23-3
GUIDES AND CHARTS, DIAGNOSIS	21-77
HALF METAL DOOR MIRROR (EXTERNAL)—YJ	23-121
HALF-METAL DOOR LATCH STRIKER—YJ	23-135
HALF-METAL SOFT TOP DOOR—YJ	23-134
HAND DRIVE, AUTOMATIC BELT TENSIONER—XJ MODELS WITH RIGHT	7-42
HAND DRIVE, BELT SERVICE—EXCEPT RIGHT	7-40
HAND DRIVE, BELT SERVICE—XJ MODELS WITH RIGHT	7-42
HAND DRIVE (RHD), BELT TENSION—EXCEPT RIGHT	7-38
HAND DRIVE (RHD), BELT TENSION—RIGHT	7-38
HAND DRIVE (RHD) MODELS, BELT TENSION—EXCEPT RIGHT	7-45
HAND DRIVE VEHICLES, RIGHT	23-1
HANDLE COVER—XJ, PARKING BRAKE	23-94
HANDLE—XJ, ASSIST	23-89
HANDLE—XJ, DOOR EXTERNAL	23-48
HANDLE—YJ, FULL-METAL DOOR ASSIST	23-136
HANDLE—YJ, FULL-METAL DOOR LATCH EXTERNAL RELEASE	23-140
HANDLE—YJ, FULL-METAL DOOR LATCH INSIDE RELEASE AND LOCK	23-137
HANDLE—YJ, FULL-METAL DOOR WINDOW GLASS REGULATOR	23-136
HANDLE—YJ, TAILGATE LATCH AND RELEASE	23-122
HANDLING, AIRBAG MODULE	8M-2
HARD PEDAL OR HIGH PEDAL EFFORT	5-6
HARD TOP LIFTGATE GLASS—YJ	23-124
HARD TOP QUARTER WINDOW GLASS—YJ	23-149
HARD TOP REPAIR—YJ	23-127
HARD TOP ROOF VENT—YJ	23-127
HARD TOP—YJ	23-126
HARDTOP DOME/CARGO LAMP BULB REPLACEMENT—YJ VEHICLES	8L-31
HAS A MISS, INJECTOR DIAGNOSIS—VEHICLE RUNS ROUGH AND/OR	14-52
HAZARD FLASHERS; TURN SIGNALS (XJ)	8W-52-1
HAZARD FLASHERS; TURN SIGNALS (XJ-RHD)	8W-52-1
HAZARD FLASHERS; TURN SIGNALS (YJ)	8W-52-1
HAZARD WARNING SYSTEM	8J-1
HAZARD WARNING SYSTEM - YJ	8J-4
HCU DIAGNOSIS, ANTILOCK ECU	5-3
HCU INSTALLATION (XJ)	5-43
HCU INSTALLATION (YJ)	5-44
HCU OPERATION	5-36
HCU REMOVAL (XJ)	5-41
HCU REMOVAL (YJ)	5-44
HEAD COVER, ENGINE CYLINDER	9-22,9-64
HEAD, ENGINE CYLINDER	9-25,9-67
HEAD GASKET FAILURE DIAGNOSIS, ENGINE CYLINDER	9-5
HEAD NOT REMOVED, VALVE COMPONENT REPLACE—CYLINDER	9-23,9-65
HEADLAMP ALIGNMENT PREPARATION—XJ	8L-6
HEADLAMP ALIGNMENT PREPARATION—YJ	8L-22
HEADLAMP ALIGNMENT—XJ	8L-6
HEADLAMP ALIGNMENT—YJ	8L-22
HEADLAMP BULB REPLACEMENT—XJ	8L-7
HEADLAMP BULB REPLACEMENT—YJ	8L-23
HEADLAMP DELAY FUNCTION TROUBLE DIAGNOSIS—XJ	8L-14
HEADLAMP DELAY MODULE; FRONT LIGHTING (XJ)	8W-50-2
HEADLAMP DELAY MODULE; FRONT LIGHTING (XJ-RHD)	8W-50-1
HEADLAMP DELAY MODULE REPLACEMENT—XJ	8L-14
HEADLAMP DELAY MODULE—XJ, SENTINEL	8L-14
HEADLAMP DIAGNOSIS	8L-20,8L-2
HEADLAMP DIMMER SWITCH REPLACEMENT—YJ	8L-26
HEADLAMP OR PANEL DIMMER SWITCH REMOVE/INSTALL	8E-42
HEADLAMP RELAY; FRONT LIGHTING (XJ-RHD)	8W-50-1
HEADLAMP SWITCH REMOVE/INSTALL	8E-19
HEADLAMP SWITCH (XJ ONLY)	8U-1,8U-3
HEADLAMP SWITCH—XJ	8L-10
HEADLAMP SWITCH—YJ	8L-26
HEADLAMP/FOG LAMP ADJUSTMENT USING ALIGNMENT SCREEN—XJ	8L-7
HEADLAMP/FOG LAMP ADJUSTMENT USING ALIGNMENT SCREEN—YJ	8L-23
HEADLAMPS; FRONT LIGHTING (XJ)	8W-50-1
HEADLAMPS; FRONT LIGHTING (XJ-RHD)	8W-50-1
HEADLAMPS; FRONT LIGHTING (YJ)	8W-50-1
HEADLAMPS; LUBRICATION AND MAINTENANCE	0-33
HEADLINER—XJ	23-92
HEAT SHIELDS	14-13
HEAT SHIELDS, EXHAUST	11-1
HEATED OXYGEN SENSOR; FUEL/IGNITION (XJ)	8W-30-3
HEATED OXYGEN SENSOR; FUEL/IGNITION (YJ)	8W-30-3
HEATED OXYGEN SENSOR; FUEL/IGNITION (XJ-RHD)	8W-30-3
HEATED REAR WINDOW; HEATED REAR WINDOW (XJ)	8W-48-1
HEATED REAR WINDOW; HEATED REAR WINDOW (XJ-RHD)	8W-48-1
HEATED REAR WINDOW; HEATED REAR WINDOW (YJ)	8W-48-1
HEATER; AIR CONDITIONING/HEATER (YJ)	8W-42-1

Description	Group-Page
HEATER AND A/C CONTROL REPLACEMENT	24-23
HEATER AND A/C OPERATION	24-1
HEATER AND AIR CONDITIONING; AIR CONDITIONING/HEATER (YJ)	8W-42-2
HEATER CONTROL PANEL LAMP, ACCESSORY LAMP; INTERIOR LIGHTING (YJ)	8W-44-1
HEATER CONTROL REPLACEMENT	24-32
HEATER CORE	24-26
HEATER CORE AND HOUSING	24-33
HEATER DIAGNOSIS	24-17
HEATER ELEMENTS; POWER MIRRORS (XJ-RHD)	8W-62-1
HEATER, ENGINE BLOCK	7-44
HEATER HOUSING REPLACEMENT	24-26
HEATER SYSTEM; AIR CONDITIONING/HEATER (XJ)	8W-42-1
HEATER SYSTEM; AIR CONDITIONING/HEATER (XJ-RHD)	8W-42-1
HEATER SYSTEM; AIR CONDITIONING/HEATER (YJ)	8W-42-1
HEATER/DEFROSTER/INSTRUMENT PANEL OUTLET VACUUM MOTOR REPLACEMENT	24-26
HEATING AND AIR CONDITIONING TEST PROCEDURES	24-15
HEATING ELEMENT TEST, OXYGEN SENSOR (O2S)	14-48
HEATING SCHEMATIC—XJ	24-2
HEATING SYSTEM DIAGNOSIS	24-18
HELPFUL INFORMATION; CHARGING SYSTEM (XJ)	8W-20-1
HELPFUL INFORMATION; CHARGING SYSTEM (XJ-RHD)	8W-20-1
HELPFUL INFORMATION; CHARGING SYSTEM (YJ)	8W-20-1
HELPFUL INFORMATION; POWER SEAT (XJ)	8W-63-1
HELPFUL INFORMATION; POWER WINDOWS (XJ)	8W-60-2
HELPFUL INFORMATION; POWER WINDOWS (XJ-RHD)	8W-60-2
HELPFUL INFORMATION; TRAILER TOW (XJ)	8W-54-1
HELPFUL INFORMATION; TRAILER TOW (XJ-RHD)	8W-54-1
HIGH MOUNTED STOP LAMP (CHMSL)—XJ, CENTER	8L-12
HIGH MOUNTED STOP LAMP (CHMSL)—YJ, CENTER	8L-28
HIGH PEDAL EFFORT, HARD PEDAL OR	5-6
HIGH-BEAM INDICATOR LAMP; INSTRUMENT CLUSTER (XJ)	8W-40-2
HIGH-BEAM INDICATOR LAMP; INSTRUMENT CLUSTER (XJ-RHD)	8W-40-2
HIGH-LINE GAUGE CLUSTER (LHD)	8E-9
HIGH-PRESSURE CUT-OFF SWITCH, LOW-PRESSURE	24-15,24-16
HINGE REPLACEMENT—XJ, HOOD	23-10
HINGE/HINGE PIN REPLACEMENT—XJ, DOOR	23-52
HINGE—XJ, LIFTGATE	23-60
HINGE—YJ, TAILGATE	23-121
HINGES—YJ, FULL-METAL DOOR	23-140
HITCH, TRAILER	23-77
HITCH—XJ, TRAILER	23-77
HOISTING, JUMP STARTING, TOWING	0-9
HOISTING RECOMMENDATIONS	0-10
HOLD AFTER DRIVING THROUGH DEEP WATER PUDDLES, BRAKES DO NOT	5-7
HOLDDOWN AND FLOOR BRACKETS—XJ, SPARE TIRE/WHEEL	23-98
HONING CYLINDER BORES	9-2
HOOD ADJUSTMENT—XJ	23-10
HOOD ALIGNMENT—YJ	23-107
HOOD HINGE REPLACEMENT—XJ	23-10
HOOD INSULATOR PANEL—YJ	23-107
HOOD LATCH REPLACEMENT—XJ	23-11
HOOD LATCH STRIKER REPLACEMENT—XJ	23-11
HOOD SAFETY LATCH—YJ	23-109
HOOD—XJ	23-7
HOOD—YJ	23-107
HOOK, REAR TOW	13-9
HOOKS, FRONT TOW	13-7
HOOKS, TOW	13-13
HORN; HORN/CIGAR LIGHTER	8E-1
HORN; HORN/CIGAR LIGHTER (YJ)	8W-41-1
HORN; INSTRUMENT CLUSTER (XJ)	8W-40-1
HORN CONTACT/CLOCKSPRING	8G-4
HORN RELAY	8G-1
HORN REMOVE/INSTALL	8G-3
HORN SWITCH	8G-1
HORN SWITCH REMOVE/INSTALL	8G-3
HORNS	8G-1
HOSE REPLACEMENT, PRESSURE AND RETURN	19-11
HOSE ROUTING SCHEMATICS, VACUUM	25-2
HOSE SPLASH SHIELD—XJ VEHICLES, FUEL FILLER	13-4
HOSES, BRAKE FLUID—BRAKE BLEEDING—BRAKELINES	5-10
HOSES, BRAKELINES	5-12
HOSES, COOLING SYSTEM	7-32
HOSES/TUBES PRECAUTIONS, REFRIGERANT	24-10
HOSES/TUBING, RUBBER AND PLASTIC	0-26
HOUSING, AIR CLEANER	14-58
HOUSING COMPONENTS—YJ, EVAPORATIVE	24-6
HOUSING END PLUG	19-28
HOUSING, EVAPORATOR	24-35
HOUSING, EVAPORATOR/BLOWER	24-29
HOUSING, HEATER CORE	24-33
HOUSING INSPECTION AND PARK LOCK COMPONENT OVERHAUL, ADAPTER/EXTENSION	21-127
HOUSING LEAK DIAGNOSIS, CONVERTER	21-75
HOUSING MISALIGNMENT, CLUTCH	6-4
HOUSING REPLACEMENT, CLUTCH	6-13
HOUSING REPLACEMENT, HEATER	24-26
HOUSING SEAL REPLACEMENT, ADAPTER	21-191
HOUSING—XJ, LIFTGATE LICENSE PLATE LAMP	23-65
HOUSINGS—YJ, INSTRUMENT CLUSTER AND GAUGE	23-151
HOW TO USE THIS GROUP; WIRING DIAGRAMS (XJ)	8W-1
HOW TO USE THIS GROUP; WIRING DIAGRAMS (XJ-RHD)	8W-1
HOW TO USE THIS GROUP; WIRING DIAGRAMS (YJ)	8W-1
HUB BEARING AND AXLE SHAFT	2-25
HYDRAULIC CONTROL UNIT; ANTI-LOCK BRAKES (XJ)	8W-32-2
HYDRAULIC CONTROL UNIT; ANTI-LOCK BRAKES (XJ-RHD)	8W-32-2
HYDRAULIC CONTROL UNIT; ANTI-LOCK BRAKES (YJ)	8W-32-2
HYDRAULIC CONTROL UNIT (HCU)	5-33
HYDRAULIC LINKAGE COMPONENTS	6-1
HYDRAULIC LINKAGE INSTALLATION, CLUTCH	6-14
HYDRAULIC LINKAGE REMOVAL, CLUTCH	6-13
HYDRAULIC PRESSURE TEST	21-177,21-72
HYDRAULIC SYSTEM	21-169
HYDRAULIC TAPPETS	9-24,9-66
HYDROSTATIC LOCK	9-4
IDENTIFICATION, AW-4 ACCUMULATOR COMPONENT	21-342
IDENTIFICATION, AW-4 VALVE AND SPRING	21-343
IDENTIFICATION, BOLT	Intro.-14
IDENTIFICATION, CIRCUIT; WIRING DIAGRAMS—GENERAL INFORMATION (XJ)	8W-1
IDENTIFICATION, ENGINE AND TRANSMISSION/TRANSFER CASE	Intro.-5
IDENTIFICATION, MAJOR COMPONENT	Intro.-5
IDENTIFICATION NUMBER (VIN) DECODING, VEHICLE	Intro.-4
IDENTIFICATION NUMBER (VIN) PLATE, VEHICLE	Intro.-4
IDENTIFICATION, SECTION; WIRING DIAGRAMS (XJ)	8W-1
IDENTIFICATION, SECTION; WIRING DIAGRAMS (XJ-RHD)	8W-1
IDENTIFICATION, SECTION; WIRING DIAGRAMS (YJ)	8W-1
IDENTIFICATION, TRANSFER CASE	21-284, 21-307
IDENTIFICATION, TRANSMISSION	21-166,21-33, 21-67,21-2
IDENTIFICATION, WIRE CODE; WIRING DIAGRAMS—GENERAL INFORMATION (XJ)	8W-1
IDENTIFICATION/SYSTEM OPERATION, COMPONENT	8D-1
IDLE AIR CONTROL (IAC) MOTOR; FUEL SYSTEM	14-62
IDLE AIR CONTROL (IAC) MOTOR; FUEL/IGNITION (XJ)	8W-30-2
IDLE AIR CONTROL (IAC) MOTOR; FUEL/IGNITION (YJ)	8W-30-2
IDLE AIR CONTROL (IAC) MOTOR; FUEL/IGNITION (XJ-RHD)	8W-30-2
IDLE AIR CONTROL (IAC) MOTOR—PCM OUTPUT	14-27
IDLE AIR CONTROL MOTOR TEST	14-49
IDLE SWITCH, EXTENDED	8W-30-5
IDLE SWITCH TEST, EXTENDED	14-48
IDLE SWITCH—PCM INPUT, EXTENDED	14-23
IGNITION CABLES, DISTRIBUTOR CAP AND ROTOR	0-20
IGNITION CIRCUIT SENSE—PCM INPUT	14-23
IGNITION COIL; FUEL SYSTEM	14-62
IGNITION COIL; FUEL/IGNITION (XJ)	8W-30-2
IGNITION COIL; FUEL/IGNITION (YJ)	8W-30-2
IGNITION COIL; IGNITION SYSTEMS	8D-22, 8D-4,8D-9
IGNITION COIL; FUEL/IGNITION (XJ-RHD)	8W-30-2
IGNITION COIL RESISTANCE	8D-9
IGNITION COIL—PCM OUTPUT	14-28
IGNITION FEED; FUEL/IGNITION (XJ-RHD)	8W-30-1
IGNITION KEY-IN SWITCH	8U-1,8U-2
IGNITION SECONDARY CIRCUIT DIAGNOSIS	8D-10
IGNITION SWITCH; BRAKES	5-35
IGNITION SWITCH; FUEL/IGNITION (XJ)	8W-30-1
IGNITION SWITCH; FUEL/IGNITION (YJ)	8W-30-1
IGNITION SWITCH; FUEL/IGNITION (XJ-RHD)	8W-30-1
IGNITION SWITCH AND KEY CYLINDER SERVICE	8D-26
IGNITION SWITCH CONTINUITY TESTS	8D-30
IGNITION SWITCH LAMP; INTERIOR LIGHTING (XJ)	8W-44-1
IGNITION SWITCH LAMP; INTERIOR LIGHTING (XJ-RHD)	8W-44-1
IGNITION SWITCH SERVICE	19-54
IGNITION SWITCH—XJ MODELS	8D-26
IGNITION SWITCH—YJ MODELS	8D-29
IGNITION TIMING	8D-11
ILLUMINATION LAMPS, CLUSTER	8E-16,8E-26, 8E-34,8E-4
ILLUMINATION LAMPS, INSTRUMENT PANEL; INTERIOR LIGHTING (XJ)	8W-44-1
ILLUMINATION LAMPS, INSTRUMENT PANEL; INTERIOR LIGHTING (XJ-RHD)	8W-44-1
ILLUMINATION, RADIO; RADIO (XJ)	8W-47-1
ILLUMINATION, RADIO; RADIO (XJ-RHD)	8W-47-1
ILLUMINATION, RADIO; RADIO (YJ)	8W-47-1
ILLUMINATION RELAY CONNECTIONS, RADIO	8F-4
ILLUMINATION RELAY, RADIO	8F-1,8F-4
IMPACT SENSOR/INFLATOR ASSEMBLY	8M-2
INCORRECT FLUID LEVEL, EFFECTS OF	21-71
INDEX, DIAGRAM; AIR CONDITIONING/HEATER (XJ)	8W-42-2
INDEX, DIAGRAM; AIR CONDITIONING/HEATER (XJ-RHD)	8W-42-2
INDEX, DIAGRAM; AIR CONDITIONING/HEATER (YJ)	8W-42-1,8W-42-2
INDEX, DIAGRAM; ANTI-LOCK BRAKES (XJ)	8W-32-3
INDEX, DIAGRAM; ANTI-LOCK BRAKES (XJ-RHD)	8W-32-3
INDEX, DIAGRAM; ANTI-LOCK BRAKES (YJ)	8W-32-2
INDEX, DIAGRAM; CHARGING SYSTEM (XJ)	8W-20-1
INDEX, DIAGRAM; CHARGING SYSTEM (XJ-RHD)	8W-20-1
INDEX, DIAGRAM; CHARGING SYSTEM (YJ)	8W-20-1

Description	Group-Page
INDEX, DIAGRAM; FRONT LIGHTING (XJ)	8W-50-2
INDEX, DIAGRAM; FRONT LIGHTING (XJ-RHD)	8W-50-3
INDEX, DIAGRAM; FRONT LIGHTING (YJ)	8W-50-2
INDEX, DIAGRAM; FUEL/IGNITION (YJ)	8W-30-5
INDEX, DIAGRAM; FUSE/FUSE BLOCK (XJ)	8W-10-1
INDEX, DIAGRAM; FUSE/FUSE BLOCK (XJ-RHD)	8W-10-1
INDEX, DIAGRAM; FUSE/FUSE BLOCK (YJ)	8W-10-1
INDEX, DIAGRAM; GROUND DISTRIBUTION (XJ)	8W-15-1
INDEX, DIAGRAM; GROUND DISTRIBUTION (XJ-RHD)	8W-15-1
INDEX, DIAGRAM; GROUND DISTRIBUTION (YJ)	8W-15-1
INDEX, DIAGRAM; HEATED REAR WINDOW (XJ)	8W-48-1
INDEX, DIAGRAM; HEATED REAR WINDOW (XJ-RHD)	8W-48-1
INDEX, DIAGRAM; HEATED REAR WINDOW (YJ)	8W-48-1
INDEX, DIAGRAM; HORN/CIGAR LIGHTER	8E-1
INDEX, DIAGRAM; HORN/CIGAR LIGHTER (YJ)	8W-41-1
INDEX, DIAGRAM; INSTRUMENT CLUSTER (XJ)	8W-40-1,8W-40-3
INDEX, DIAGRAM; INSTRUMENT CLUSTER (XJ-RHD)	8W-40-3
INDEX, DIAGRAM; INSTRUMENT CLUSTER (YJ)	8W-40-2
INDEX, DIAGRAM; INTERIOR LIGHTING (XJ)	8W-44-2
INDEX, DIAGRAM; INTERIOR LIGHTING (XJ-RHD)	8W-44-2
INDEX, DIAGRAM; INTERIOR LIGHTING (YJ)	8W-44-2
INDEX, DIAGRAM; OVERHEAD CONSOLE (XJ)	8W-49-1
INDEX, DIAGRAM; OVERHEAD CONSOLE (XJ-RHD)	8W-49-1
INDEX, DIAGRAM; POWER DISTRIBUTION (XJ)	8W-11-1
INDEX, DIAGRAM; POWER DISTRIBUTION (XJ-RHD)	8W-11-1
INDEX, DIAGRAM; POWER DISTRIBUTION (YJ)	8W-11-1
INDEX, DIAGRAM; POWER DOOR LOCKS (XJ)	8W-61-1
INDEX, DIAGRAM; POWER DOOR LOCKS (XJ-RHD)	8W-61-1
INDEX, DIAGRAM; POWER MIRRORS (XJ)	8W-62-1
INDEX, DIAGRAM; POWER MIRRORS (XJ-RHD)	8W-62-1
INDEX, DIAGRAM; POWER SEAT (XJ)	8W-63-1
INDEX, DIAGRAM; POWER SEAT (XJ-RHD)	8W-63-1
INDEX, DIAGRAM; POWER WINDOWS (XJ)	8W-60-2
INDEX, DIAGRAM; POWER WINDOWS (XJ-RHD)	8W-60-2
INDEX, DIAGRAM; REAR LIGHTING (XJ)	8W-51-1
INDEX, DIAGRAM; REAR LIGHTING (XJ-RHD)	8W-51-1
INDEX, DIAGRAM; REAR LIGHTING (YJ)	8W-51-1
INDEX, DIAGRAM; STARTING SYSTEM (XJ)	8W-21-1
INDEX, DIAGRAM; STARTING SYSTEM (XJ-RHD)	8W-21-1
INDEX, DIAGRAM; STARTING SYSTEM (YJ)	8W-21-1
INDEX, DIAGRAM; TRAILER TOW (XJ)	8W-54-1
INDEX, DIAGRAM; TRAILER TOW (XJ-RHD)	8W-54-1
INDEX, DIAGRAM; TRANSMISSION CONTROLS (XJ)	8W-31-1
INDEX, DIAGRAM; TRANSMISSION CONTROLS (XJ-RHD)	8W-31-1
INDEX, DIAGRAM; TRANSMISSION CONTROLS (YJ)	8W-31-1
INDEX, DIAGRAM; TURN SIGNALS (XJ)	8W-52-1
INDEX, DIAGRAM; TURN SIGNALS (XJ-RHD)	8W-52-1
INDEX, DIAGRAM; TURN SIGNALS (YJ)	8W-52-1
INDEX, DIAGRAM; VEHICLE SPEED CONTROL (XJ)	8W-33-1
INDEX, DIAGRAM; VEHICLE SPEED CONTROL (XJ-RHD)	8W-33-1
INDEX, DIAGRAM; WIPERS (XJ)	8W-53-2
INDEX, DIAGRAM; WIPERS (XJ-RHD)	8W-53-2
INDEX, DIAGRAM; WIPERS (YJ)	8W-53-2
INDEX, DIAGRAM; FUEL/IGNITION (XJ-RHD)	8W-30-5
INDEX, GROUP; COOLING SYSTEM	8E-1
INDEX, GROUP; INSTRUMENT PANEL AND GAUGES	8E-1
INDEX, SPLICE; SPLICE INFORMATION (XJ)	8W-70-1
INDEX, SPLICE; SPLICE INFORMATION (XJ-RHD)	8W-70-1
INDEX, SPLICE; SPLICE INFORMATION (YJ)	8W-70-1
INDEX—2.5L ENGINE, DIAGRAM	8W-30-6
INDEX—4.0L ENGINE, DIAGRAM	8W-30-6
INDICATOR LAMP, CHARGING SYSTEM	8W-40-3
INDICATOR LAMP, HIGH-BEAM; INSTRUMENT CLUSTER (XJ)	8W-40-2
INDICATOR LAMP, HIGH-BEAM; INSTRUMENT CLUSTER (XJ-RHD)	8W-40-2
INDICATOR LAMP (MIL), MALFUNCTION; FUEL/IGNITION (XJ)	8W-30-5
INDICATOR LAMP (MIL), MALFUNCTION; FUEL/IGNITION (YJ)	8W-30-5
INDICATOR LAMP (MIL), MALFUNCTION; INSTRUMENT CLUSTER (XJ)	8W-40-2
INDICATOR LAMP (MIL), MALFUNCTION; INSTRUMENT CLUSTER (XJ-RHD)	8W-40-1
INDICATOR LAMP (MIL), MALFUNCTION; FUEL/IGNITION (XJ-RHD)	8W-30-4
INDICATOR LAMP—PCM OUTPUT, MALFUNCTION	14-28
INDICATOR LAMPS	8E-12,8E-25,8E-32,8E-3
INDICATOR LAMPS, TURN SIGNAL; INSTRUMENT CLUSTER (XJ)	8W-40-2
INDICATOR LAMPS, TURN SIGNAL; INSTRUMENT CLUSTER (XJ-RHD)	8W-40-2
INDICATOR (SRI) LAMP, SERVICE REMINDER	25-1
INDICATOR WARNING LAMP, SEAT BELT; INSTRUMENT CLUSTER (XJ)	8W-40-2
INDICATOR WARNING LAMP, SEAT BELT; INSTRUMENT CLUSTER (XJ-RHD)	8W-40-2
INDICATOR—PCM OUTPUT, SHIFT	14-29
INDICATORS, TREAD WEAR	22-3
INFLATION PRESSURES, TIRE	22-2
INFORMATION—XJ, DOME/COURTESY LAMP SERVICE	8L-16
INFORMATION—XJ, UNDERHOOD LAMP SERVICE	8L-12
INFORMATION—YJ, DOME/COURTESY LAMP SERVICE	8L-31
INFORMATION—YJ, SOFT TOP SERVICE	23-127
INFORMATION—YJ, UNDERHOOD LAMP SERVICE	8L-28
INITIALIZATION, ABS SYSTEM POWER-UP	5-35
INJECTION (MFI)—COMPONENT DESCRIPTION/SYSTEM OPERATION, MULTI-PORT FUEL	14-19
INJECTION (MFI)—COMPONENT REMOVAL/INSTALLATION, MULTI-PORT FUEL	14-58
INJECTION (MFI)—GENERAL DIAGNOSIS, MULTI-PORT FUEL	14-35
INJECTOR DIAGNOSIS—VEHICLE RUNS ROUGH AND/OR HAS A MISS	14-52
INJECTOR, FUEL	14-60
INJECTOR TEST, FUEL	14-51
INJECTORS, FUEL; FUEL/IGNITION (XJ)	8W-30-1
INJECTORS, FUEL; FUEL/IGNITION (YJ)	8W-30-2
INJECTORS, FUEL; FUEL/IGNITION (XJ-RHD)	8W-30-1
INJECTORS—PCM OUTPUT, FUEL	14-27
IN-LINE FUSE	8F-1
INNER AXLE SHAFT OIL SEAL REPLACEMENT	2-35
INNER SCUFF PLATE/COWL SIDE TRIM PANEL—XJ, FRONT	23-86
INNER SPLASH SHIELDS—YJ, FENDER	23-116
INPUT, AIR CONDITIONING (A/C) CONTROLS—PCM	14-21
INPUT, AUTOMATIC SHUTDOWN (ASD) SENSE—PCM	14-21
INPUT, BATTERY VOLTAGE—PCM	14-21
INPUT, BRAKE SWITCH; ANTI-LOCK BRAKES (XJ)	8W-32-2
INPUT, BRAKE SWITCH; ANTI-LOCK BRAKES (XJ-RHD)	8W-32-2
INPUT, BRAKE SWITCH; ANTI-LOCK BRAKES (YJ)	8W-32-2
INPUT, BRAKE SWITCH; FUEL/IGNITION (XJ)	8W-30-5
INPUT, BRAKE SWITCH; FUEL/IGNITION (YJ)	8W-30-5
INPUT, BRAKE SWITCH; FUEL/IGNITION (XJ-RHD)	8W-30-5
INPUT, BRAKE SWITCH—PCM	14-22
INPUT, CAMSHAFT POSITION SENSOR—PCM	14-22
INPUT, CRANKSHAFT POSITION SENSOR—PCM	14-22
INPUT, DATA LINK CONNECTOR—PCM	14-22
INPUT, ENGINE COOLANT TEMPERATURE SENSOR—PCM	14-23
INPUT, EXTENDED IDLE SWITCH—PCM	14-23
INPUT, IGNITION CIRCUIT SENSE—PCM	14-23
INPUT, INTAKE MANIFOLD AIR TEMPERATURE SENSOR—PCM	14-22
INPUT, MANIFOLD ABSOLUTE PRESSURE (MAP) SENSOR—PCM	14-23
INPUT, OXYGEN (O2S) SENSOR—PCM	14-24
INPUT, PARK/NEUTRAL SWITCH—PCM	14-24
INPUT, POWER STEERING PRESSURE SWITCH—PCM	14-24
INPUT, SCI RECEIVE—PCM	14-24
INPUT, SENSOR RETURN—PCM	14-25
INPUT SIGNALS, WHEEL/TIRE SIZE	5-3
INPUT, SPEED CONTROL—PCM	14-25
INPUT, THROTTLE POSITION SENSOR (TPS)—PCM	14-25
INPUT, VEHICLE SPEED SENSOR—PCM	14-25
INSERT—XJ, REAR QUARTER WINDOW GLASS/REAR QUARTER PLASTIC	23-73
INSIDE LATCH RELEASE AND LOCK RODS—XJ, DOOR	23-50
INSIDE RELEASE AND LOCK HANDLE—YJ, FULL-METAL DOOR LATCH	23-137
INSPECTION AND ADJUSTMENT, PRELIMINARY	21-176
INSPECTION AND DIAGNOSIS CHARTS	6-4
INSPECTION AND PARK LOCK COMPONENT OVERHAUL, ADAPTER/EXTENSION HOUSING	21-127
INSPECTION, CALIPER CLEANING	5-50
INSPECTION (ENGINE OIL LEAKS IN GENERAL)	9-6
INSPECTION, GEAR CLEANING	19-42
INSPECTION, OVERHAUL CLEANING	21-294, 21-318
INSPECTION, PRE-ALIGNMENT	2-6
INSPECTION, RUBBER AND PLASTIC COMPONENT	0-20
INSPECTION, TORQUE CONVERTER STATOR CLUTCH	21-199
INSPECTION, TRANSMISSION CASE CLEANING	21-125
INSPECTION, VALVE BODY DISASSEMBLY	21-147
INSTALLATION, 30RH/32RH TRANSMISSION REMOVAL	21-115
INSTALLATION, ACCELERATION SWITCH	5-39
INSTALLATION AND ADJUSTMENT, REAR WHEEL SENSOR	5-38
INSTALLATION, AW-4 TRANSMISSION REMOVAL	21-198
INSTALLATION, BRAKE PEDAL	5-31
INSTALLATION, BRAKELIGHT SWITCH	5-32
INSTALLATION, CALIPER	5-51
INSTALLATION, CLUTCH COVER AND DISC	6-10
INSTALLATION, CLUTCH HYDRAULIC LINKAGE	6-14
INSTALLATION, CLUTCH PEDAL	6-15
INSTALLATION, DIFFERENTIAL	2-44
INSTALLATION, DIFFERENTIAL MEASUREMENT	3-25
INSTALLATION, DISC BRAKESHOE	5-47

Description	Group-Page
INSTALLATION, DRUM BRAKESHOE	5-55
INSTALLATION, FRONT WHEEL SENSOR	5-38
INSTALLATION METHODS AND PARTS USAGE	6-4
INSTALLATION (NON-ABS), MASTER CYLINDER	5-16
INSTALLATION, ROTOR	5-51
INSTALLATION, TRANSFER CASE	21-288,21-309
INSTALLATION, TRANSMISSION	21-36,21-5
INSTALLATION, TRANSMISSION AND CONVERTER	21-117
INSTALLATION, TRANSMISSION AND TORQUE CONVERTER	21-199
INSTALLATION, TRANSMISSION VALVE BODY	21-187
INSTALLATION, VALVE BODY	21-104
INSTALLATION, WHEEL	22-6
INSTALLATION, WHEEL CYLINDER	5-58
INSTALLATION (WITH ABS), MASTER CYLINDER AND COMBINATION VALVE	5-20
INSTALLATION (XJ), HCU	5-43
INSTALLATION (XJ MODELS), ECU	5-40
INSTALLATION (XJ), SHIFT LEVER	21-286, 21-309
INSTALLATION (XJ WITH ABS), POWER BRAKE BOOSTER	5-27
INSTALLATION (XJ WITH FULL CONSOLE), PARKING BRAKE LEVER	5-64
INSTALLATION (XJ WITH MINI CONSOLE), PARKING BRAKE LEVER	5-63
INSTALLATION (XJ WITHOUT ABS), POWER BRAKE BOOSTER	5-30
INSTALLATION (XJ WITHOUT CONSOLE), PARKING BRAKE LEVER	5-65
INSTALLATION (YJ), HCU	5-44
INSTALLATION (YJ), PARKING BRAKE PEDAL	5-66
INSTALLATION (YJ), POWER BRAKE BOOSTER	5-30
INSTALLATION (YJ), SHIFT LEVER	21-286
INSTRUMENT CLUSTER; INSTRUMENT CLUSTER (XJ)	8W-40-1
INSTRUMENT CLUSTER; INSTRUMENT CLUSTER (XJ-RHD)	8W-40-1
INSTRUMENT CLUSTER; INSTRUMENT CLUSTER (YJ)	8W-40-1
INSTRUMENT CLUSTER AND GAUGE HOUSINGS—YJ	23-151
INSTRUMENT CLUSTER BEZEL—XJ	23-80
INSTRUMENT CLUSTER BEZEL—YJ	23-151
INSTRUMENT CLUSTERS	8E-24,8E-1
INSTRUMENT PANEL	8E-24,8E-1
INSTRUMENT PANEL AND GAUGES—YJ	8E-24
INSTRUMENT PANEL COMPONENTS—YJ	23-152
INSTRUMENT PANEL ILLUMINATION LAMPS; INTERIOR LIGHTING (XJ)	8W-44-1
INSTRUMENT PANEL ILLUMINATION LAMPS; INTERIOR LIGHTING (XJ-RHD)	8W-44-1
INSTRUMENT PANEL REMOVE/INSTALL	8E-20
INSTRUMENT PANEL—YJ	23-151
INSULATOR PANEL—XJ, DASH PANEL	23-12
INSULATOR PANEL—YJ, HOOD	23-107
INTAKE AIR TEMPERATURE SENSOR; FUEL/IGNITION (XJ)	8W-30-4
INTAKE AIR TEMPERATURE SENSOR; FUEL/IGNITION (YJ)	8W-30-4
INTAKE AIR TEMPERATURE SENSOR; FUEL/IGNITION (XJ-RHD)	8W-30-4
INTAKE DUCT, FRESH AIR	24-34
INTAKE MANIFOLD	14-63
INTAKE MANIFOLD AIR TEMPERATURE SENSOR; FUEL SYSTEM	14-60
INTAKE MANIFOLD AIR TEMPERATURE SENSOR; IGNITION SYSTEMS	8D-23,8D-5
INTAKE MANIFOLD AIR TEMPERATURE SENSOR TEST; FUEL SYSTEM	14-46
INTAKE MANIFOLD AIR TEMPERATURE SENSOR TEST; IGNITION SYSTEMS	8D-11
INTAKE MANIFOLD AIR TEMPERATURE SENSOR—PCM INPUT	14-22
INTAKE MANIFOLD LEAKAGE DIAGNOSIS	9-5
INTAKE MANIFOLD—2.5L ENGINE	11-7
INTAKE MANIFOLD—4.0L ENGINE	11-8
INTERCHANGEABILITY, TRANSMISSION CHANGES AND PARTS	21-67
INTERFERENCE, RADIO FREQUENCY	8F-5
INTERIOR COMPONENTS	23-151,23-80
INTERIOR LAMPS	8L-16,8L-31
INTERIOR LAMPS—XJ	8L-18
INTERIOR LAMPS—YJ	8L-32
INTERIOR REARVIEW MIRROR SUPPORT BRACKET REPLACEMENT—XJ	23-68
INTERIOR REARVIEW MIRROR—XJ	23-66
INTERIOR TRIM PANELS AND SCUFF PLATES—XJ	23-84
INTERLOCK CABLE ADJUSTMENT, PARK	21-195
INTERLOCK CABLE ADJUSTMENT (XJ), PARK	21-101
INTERLOCK MECHANISM, AUTOMATIC TRANSMISSION SHIFTER/IGNITION	19-55
INTERMEDIATE (COUPLER) SHAFT	19-45
INTERMEDIATE—COUPLING SHAFT	19-23
INTERMITTENT AND POOR CONNECTIONS; WIRING DIAGRAMS—GENERAL INFORMATION (XJ)	8W-4
INTERMITTENT WIPE MODULE	8K-4
INTERMITTENT WIPE SWITCH TESTING	8K-15
INTERMITTENT WIPERS; WIPERS (XJ-RHD)	8W-53-1
INTERNATIONAL SYMBOLS	0-1
INTERNATIONAL VEHICLE CONTROL AND DISPLAY SYMBOLS	Intro.-5
INTRODUCTION; BODY COMPONENTS—XJ VEHICLES	23-158
INTRODUCTION; LUBRICATION AND MAINTENANCE	0-1,0-4
IN-VEHICLE SERVICE, 30RH/32RH	21-99
IN-VEHICLE SERVICE, AW-4	21-182
I/P ASH RECEIVER TRAY LAMP—XJ	23-80
JACK STORAGE—XJ	23-97
JAMB SWITCH, DRIVER'S DOOR	8U-1,8U-2
JEEP BODY CODE LETTERS	5-2
JOINT ANGLE MEASUREMENT, UNIVERSAL	16-4
JOINT REPLACEMENT, UNIVERSAL	16-10
JOINTS, UNIVERSAL	16-2
JUMP STARTING PROCEDURE	0-9
JUMP STARTING, TOWING AND HOISTING	0-9
KEY CYLINDER SERVICE, IGNITION SWITCH	8D-26
KEY LOCK CYLINDER—XJ, DOOR	23-47
KEY LOCK CYLINDER—YJ, FULL-METAL DOOR	23-139
KEY-IN SWITCH, IGNITION	8U-1,8U-2
KEYLESS ENTRY MODULE	8P-1,8P-7
KEYLESS ENTRY MODULE, REMOTE	8W-61-1
KEYLESS ENTRY MODULE REMOVE/INSTALL	8P-10
KEYLESS ENTRY RECEIVER	8C-1
KEYLESS ENTRY RECEIVER—XJ	23-93
KEYLESS ENTRY TRANSMITTER	8P-1,8P-7,8P-8
KEYS ARE NOT AVAILABLE, TOWING WHEN	0-13
KNOCK, LOW SPEED; FRONT SUSPENSION AND AXLE	2-19
KNOCK, LOW SPEED; REAR SUSPENSION AND AXLES	3-10
KNUCKLE AND BALL STUDS, STEERING	2-32
LABEL, VEHICLE EMISSION CONTROL INFORMATION (VECI)	25-1
LABEL, VEHICLE SAFETY CERTIFICATION	Intro.-4
LABELS AND PLATES—XJ, VEHICLE	Intro.-2
LABELS AND PLATES—YJ, VEHICLE	Intro.-3
LABELS/DECALS/PLATES—XJ	23-1
LABELS/DECALS/PLATES—YJ	23-102
LABELS/PLATES, CODES AND DIMENSIONS, DESIGNATIONS	Intro.-1
LAG TEST, TIME	21-178
LAMP, ABS WARNING; ANTI-LOCK BRAKES (XJ)	8W-32-2
LAMP, ABS WARNING; ANTI-LOCK BRAKES (XJ-RHD)	8W-32-2
LAMP, ABS WARNING; ANTI-LOCK BRAKES (YJ)	8W-32-2
LAMP, ABS WARNING; INSTRUMENT CLUSTER (XJ)	8W-40-2
LAMP, ABS WARNING; INSTRUMENT CLUSTER (XJ-RHD)	8W-40-2
LAMP, ABS WARNING; INSTRUMENT CLUSTER (YJ)	8W-40-2
LAMP, ACCESSORY LAMP AND HEATER CONTROL PANEL	8W-44-1
LAMP ADJUSTMENT USING ALIGNMENT SCREEN—XJ, HEADLAMP/FOG	8L-7
LAMP ADJUSTMENT USING ALIGNMENT SCREEN—YJ, HEADLAMP/FOG	8L-23
LAMP AND DOME LAMP, CARGO	8W-44-1
LAMP AND HEATER CONTROL PANEL LAMP, ACCESSORY	8W-44-1
LAMP, BRAKE WARNING; INSTRUMENT CLUSTER (XJ)	8W-40-2
LAMP, BRAKE WARNING; INSTRUMENT CLUSTER (XJ-RHD)	8W-40-2
LAMP, BRAKE WARNING; INSTRUMENT CLUSTER (YJ)	8W-40-2
LAMP BULB REMOVE/INSTALL, READING/COURTESY	8C-8
LAMP BULB REPLACEMENT—XJ, BACK-UP/REAR TURN SIGNAL/TAIL	8L-12
LAMP BULB REPLACEMENT—XJ, FRONT PARK/TURN SIGNAL	8L-9
LAMP BULB REPLACEMENT—XJ, SIDE MARKER	8L-10
LAMP BULB REPLACEMENT—XJ, UNDERHOOD	8L-13
LAMP BULB REPLACEMENT—YJ, BACK-UP/REAR TURN SIGNAL/TAIL	8L-28
LAMP BULB REPLACEMENT—YJ, FRONT PARK/TURN SIGNAL	8L-25
LAMP BULB REPLACEMENT—YJ, SIDE MARKER	8L-25
LAMP BULB REPLACEMENT—YJ, UNDERHOOD	8L-29
LAMP BULB REPLACEMENT—YJ VEHICLES, HARDTOP DOME/CARGO	8L-31
LAMP, CARGO LAMP AND DOME; INTERIOR LIGHTING (XJ-RHD)	8W-44-1
LAMP, CARGO LAMP, COURTESY LAMPS AND DOME; INTERIOR LIGHTING (XJ)	8W-44-1
LAMP, CHARGING SYSTEM INDICATOR; INSTRUMENT CLUSTER (XJ)	8W-40-3
LAMP (CHMSL)—XJ, CENTER HIGH MOUNTED STOP	8L-12
LAMP (CHMSL)—YJ, CENTER HIGH MOUNTED STOP	8L-28
LAMP, COURTESY LAMPS AND DOME LAMP, CARGO; INTERIOR LIGHTING (XJ)	8W-44-1
LAMP DIAGNOSIS, FOG	8L-21,8L-3
LAMP (DRL) MODULE, DAYTIME RUNNING; FRONT LIGHTING (XJ)	8W-50-2
LAMP (DRL) MODULE—CANADIAN VEHICLES ONLY, DAYTIME RUNNING; FRONT LIGHTING (YJ)	8W-50-2
LAMP, ENGINE COOLANT TEMPERATURE WARNING; INSTRUMENT CLUSTER (XJ)	8W-40-1
LAMP, ENGINE COOLANT TEMPERATURE WARNING; INSTRUMENT CLUSTER (XJ-RHD)	8W-40-1
LAMP, GLOVE BOX; INTERIOR LIGHTING (XJ)	8W-44-1
LAMP, GLOVE BOX; INTERIOR LIGHTING (XJ-RHD)	8W-44-1
LAMP, HIGH-BEAM INDICATOR; INSTRUMENT CLUSTER (XJ)	8W-40-2
LAMP, HIGH-BEAM INDICATOR; INSTRUMENT CLUSTER (XJ-RHD)	8W-40-2
LAMP HOUSING—XJ, LIFTGATE LICENSE PLATE	23-65
LAMP, IGNITION SWITCH; INTERIOR LIGHTING (XJ)	8W-44-1
LAMP, IGNITION SWITCH; INTERIOR LIGHTING (XJ-RHD)	8W-44-1
LAMP, LOW FUEL WARNING; INSTRUMENT CLUSTER (XJ)	8W-40-1
LAMP, LOW WASHER FLUID WARNING; INSTRUMENT CLUSTER (XJ)	8W-40-2
LAMP, LOW WASHER FLUID WARNING; INSTRUMENT CLUSTER (XJ-RHD)	8W-40-2
LAMP, MANUAL TRANSMISSION UP-SHIFT; INSTRUMENT CLUSTER (XJ)	8W-40-2
LAMP (MIL), MALFUNCTION INDICATOR; FUEL/IGNITION (XJ)	8W-30-5
LAMP (MIL), MALFUNCTION INDICATOR; FUEL/IGNITION (YJ)	8W-30-5
LAMP (MIL), MALFUNCTION INDICATOR; INSTRUMENT CLUSTER (XJ)	8W-40-2
LAMP (MIL), MALFUNCTION INDICATOR; INSTRUMENT CLUSTER (XJ-RHD)	8W-40-1
LAMP (MIL), MALFUNCTION INDICATOR; FUEL/IGNITION (XJ-RHD)	8W-30-4

Description	Group-Page
LAMP, OIL PRESSURE WARNING; INSTRUMENT CLUSTER (XJ)	8W-40-2
LAMP, OIL PRESSURE WARNING; INSTRUMENT CLUSTER (XJ-RHD)	8W-40-1
LAMP RELAY, STOP; TRAILER TOW (XJ)	8W-54-1
LAMP RELAY, STOP; TRAILER TOW (XJ-RHD)	8W-54-1
LAMP REPLACEMENT—XJ, DOME	8L-17
LAMP REPLACEMENT—XJ, FOG	8L-9
LAMP REPLACEMENT—XJ, UNDERHOOD	8L-13
LAMP REPLACEMENT—YJ, FOG	8L-25
LAMP REPLACEMENT—YJ, UNDERHOOD	8L-29
LAMP, SEAT BELT INDICATOR WARNING; INSTRUMENT CLUSTER (XJ)	8W-40-2
LAMP, SEAT BELT INDICATOR WARNING; INSTRUMENT CLUSTER (XJ-RHD)	8W-40-2
LAMP SERVICE INFORMATION—XJ, DOME/COURTESY	8L-16
LAMP SERVICE INFORMATION—XJ, UNDERHOOD	8L-12
LAMP SERVICE INFORMATION—YJ, DOME/COURTESY	8L-31
LAMP SERVICE INFORMATION—YJ, UNDERHOOD	8L-28
LAMP, SERVICE REMINDER INDICATOR (SRI)	25-1
LAMP SWITCH REPLACEMENT—XJ, FOG	8L-10
LAMP SWITCH REPLACEMENT—YJ, FOG	8L-26
LAMP SWITCH, STOP	8H-1,8H-6
LAMP, TRANSMISSION RANGE	8W-44-1
LAMP TROUBLE DIAGNOSIS—XJ, DOME/COURTESY	8L-16
LAMP TROUBLE DIAGNOSIS—YJ, DOME/COURTESY	8L-31
LAMP, UNDERHOOD; INTERIOR LIGHTING (XJ)	8W-44-2
LAMP, UNDERHOOD; INTERIOR LIGHTING (XJ-RHD)	8W-44-1
LAMP, UNDERHOOD; INTERIOR LIGHTING (YJ)	8W-44-1
LAMP, UPSHIFT; FUEL/IGNITION (XJ)	8W-30-5
LAMP, UP-SHIFT; INSTRUMENT CLUSTER (YJ)	8W-40-2
LAMP, UPSHIFT; TRANSMISSION CONTROLS (XJ)	8W-31-1
LAMP, UPSHIFT; TRANSMISSION CONTROLS (YJ)	8W-31-1
LAMP—PCM OUTPUT, EMR	14-27
LAMP—PCM OUTPUT, GENERATOR	14-27
LAMP—PCM OUTPUT, MALFUNCTION INDICATOR	14-28
LAMP—XJ, CARGO	23-94
LAMP—XJ, DOME	23-93
LAMP—XJ, I/P ASH RECEIVER TRAY	23-80
LAMP—XJ, LICENSE PLATE	8L-12
LAMPS	8L-19
LAMPS AND CHMSL LAMPS, STOP; REAR LIGHTING (XJ)	8W-51-1
LAMPS AND CHMSL LAMPS, STOP; REAR LIGHTING (XJ-RHD)	8W-51-1
LAMPS AND CHMSL LAMPS, STOP; REAR LIGHTING (YJ)	8W-51-1
LAMPS AND DOME LAMP, CARGO LAMP, COURTESY; INTERIOR LIGHTING (XJ)	8W-44-1
LAMPS AND DOME LAMPS, COURTESY	8W-44-1
LAMPS AND LICENSE PLATE LAMPS, TAIL; REAR LIGHTING (YJ)	8W-51-1
LAMPS AND REAR LICENSE PLATE LAMPS, TAIL; REAR LIGHTING (XJ)	8W-51-1
LAMPS AND REAR LICENSE PLATE LAMPS, TAIL; REAR LIGHTING (XJ-RHD)	8W-51-1
LAMPS, BACK-UP; REAR LIGHTING (XJ)	8W-51-1
LAMPS, BACK-UP; REAR LIGHTING (XJ-RHD)	8W-51-1
LAMPS, BACK-UP; REAR LIGHTING (YJ)	8W-51-1
LAMPS, CLUSTER ILLUMINATION	8E-16,8E-26, 8E-34,8E-4
LAMPS, COURTESY LAMPS AND DOME; INTERIOR LIGHTING (YJ)	8W-44-1
LAMPS, FOG; FRONT LIGHTING (XJ)	8W-50-1
LAMPS, FOG; FRONT LIGHTING (XJ-RHD)	8W-50-2
LAMPS, FOG; FRONT LIGHTING (YJ)	8W-50-1
LAMPS, INDICATOR	8E-12,8E-25,8E-32,8E-3
LAMPS, INSTRUMENT PANEL ILLUMINATION; INTERIOR LIGHTING (XJ)	8W-44-1
LAMPS, INSTRUMENT PANEL ILLUMINATION; INTERIOR LIGHTING (XJ-RHD)	8W-44-1
LAMPS, INTERIOR	8L-16,8L-31
LAMPS, PARKING; FRONT LIGHTING (XJ)	8W-50-1
LAMPS, PARKING; FRONT LIGHTING (XJ-RHD)	8W-50-2
LAMPS, PARKING; FRONT LIGHTING (YJ)	8W-50-1
LAMPS, READING; INTERIOR LIGHTING (XJ)	8W-44-2
LAMPS, READING; INTERIOR LIGHTING (XJ-RHD)	8W-44-1
LAMPS, READING AND COURTESY	8C-1
LAMPS, STOP LAMPS AND CHMSL; REAR LIGHTING (XJ)	8W-51-1
LAMPS, STOP LAMPS AND CHMSL; REAR LIGHTING (XJ-RHD)	8W-51-1
LAMPS, STOP LAMPS AND CHMSL; REAR LIGHTING (YJ)	8W-51-1
LAMPS, TAIL LAMPS AND LICENSE PLATE; REAR LIGHTING (YJ)	8W-51-1
LAMPS, TAIL LAMPS AND REAR LICENSE PLATE; REAR LIGHTING (XJ)	8W-51-1
LAMPS, TAIL LAMPS AND REAR LICENSE PLATE; REAR LIGHTING (XJ-RHD)	8W-51-1
LAMPS, TURN SIGNAL INDICATOR; INSTRUMENT CLUSTER (XJ)	8W-40-2
LAMPS, TURN SIGNAL INDICATOR; INSTRUMENT CLUSTER (XJ-RHD)	8W-40-2
LAMPS, VISOR VANITY MIRROR; INTERIOR LIGHTING (XJ)	8W-44-2
LAMPS, VISOR VANITY MIRROR; INTERIOR LIGHTING (XJ-RHD)	8W-44-1
LAMPS—XJ, EXTERIOR	8L-18
LAMPS—XJ, FOG	8L-7
LAMPS—XJ, INTERIOR	8L-18
LAMPS—YJ, EXTERIOR	8L-32
LAMPS—YJ, FOG	8L-23
LAMPS—YJ, INTERIOR	8L-32
LATCH ADJUSTMENT—XJ, DOOR	23-48
LATCH AND RELEASE HANDLE—YJ, TAILGATE	23-122
LATCH EXTERNAL RELEASE HANDLE—YJ, FULL-METAL DOOR	23-140
LATCH INSIDE RELEASE AND LOCK HANDLE—YJ, FULL-METAL DOOR	23-137
LATCH RELEASE AND LOCK RODS—XJ, DOOR INSIDE	23-50
LATCH RELEASE CABLE REPLACEMENT—XJ	23-11
LATCH REPLACEMENT—XJ, HOOD	23-11
LATCH STRIKER AND BUMPER—XJ, REAR SEATBACK	23-84
LATCH STRIKER REPLACEMENT—XJ, HOOD	23-11
LATCH STRIKER REPLACEMENT—XJ, SAFETY	23-11
LATCH STRIKER—YJ, HALF-METAL DOOR	23-135
LATCH STRIKER—YJ, TAILGATE	23-123
LATCH/KEY LOCK CYLINDER/STRIKER—XJ, LIFTGATE	23-61
LATCH—XJ, DOOR	23-49
LATCH—YJ, FULL-METAL DOOR	23-140
LATCH—YJ, HOOD SAFETY	23-109
LEAF SPRING; FRONT SUSPENSION AND AXLE	2-16
LEAF SPRING; REAR SUSPENSION AND AXLES	3-4,3-7
LEAF SPRING EYE BUSHING REPLACEMENT; FRONT SUSPENSION AND AXLE	2-17
LEAF SPRING EYE BUSHING REPLACEMENT; REAR SUSPENSION AND AXLES	3-5,3-7
LEAK DETECTION AND REPAIR—XJ, STATIONARY GLASS WATER	23-76
LEAK DETECTION AND REPAIR—YJ, STATIONARY GLASS WATER	23-150
LEAK DIAGNOSIS, CONVERTER HOUSING	21-75
LEAK DOWN TEST, FUEL PRESSURE	14-8
LEAK TESTING REFRIGERANT	24-11
LEAKAGE DIAGNOSIS, INTAKE MANIFOLD	9-5
LEAKAGE DIAGNOSIS, PUMP	19-10
LEAKAGE TEST, CYLINDER COMBUSTION PRESSURE	9-6
LEAKAGE TEST DIAGNOSIS, CYLINDER COMBUSTION PRESSURE	9-7
LEAKS, REPAIRING	22-3
LEAKS, TESTING COOLING SYSTEM	7-22
LEFT TURN RELAY; TRAILER TOW (XJ)	8W-54-1
LEFT TURN RELAY; TRAILER TOW (XJ-RHD)	8W-54-1
LETTERS, JEEP BODY CODE	5-2
LEVEL AND CONDITION, CHECKING FLUID	21-182
LEVEL, BRAKE FLUID	5-10
LEVEL CHECK, FLUID	21-70,21-99
LEVEL, CLUTCH FLUID	6-14
LEVEL, RECOMMENDED LUBRICANT/ CAPACITY/FILL	21-307
LEVEL, TRANSFER CASE LUBRICANT AND FILL	21-284
LEVER INSTALLATION (XJ), SHIFT	21-286, 21-309
LEVER INSTALLATION (XJ WITH FULL CONSOLE), PARKING BRAKE	5-64
LEVER INSTALLATION (XJ WITH MINI CONSOLE), PARKING BRAKE	5-63
LEVER INSTALLATION (XJ WITHOUT CONSOLE), PARKING BRAKE	5-65
LEVER INSTALLATION (YJ), SHIFT	21-286
LEVER POSITIONS, TRANSMISSION RANGES AND SHIFT	21-166
LEVER REMOVAL (XJ), SHIFT	21-286,21-309
LEVER REMOVAL (XJ WITH FULL CONSOLE), PARKING BRAKE	5-63
LEVER REMOVAL (XJ WITH MINI CONSOLE), PARKING BRAKE	5-62
LEVER REMOVAL (XJ WITHOUT CONSOLE), PARKING BRAKE	5-64
LEVER REMOVAL (YJ), SHIFT	21-286
LICENSE PLATE LAMP HOUSING—XJ, LIFTGATE	23-65
LICENSE PLATE LAMP—XJ	8L-12
LICENSE PLATE LAMPS, TAIL LAMPS; REAR LIGHTING (YJ)	8W-51-1
LICENSE PLATE LAMPS, TAIL LAMPS AND REAR; REAR LIGHTING (XJ)	8W-51-1
LICENSE PLATE LAMPS, TAIL LAMPS AND REAR; REAR LIGHTING (XJ-RHD)	8W-51-1
LICENSE PLATE SCREW ANCHOR AND BUMPER—XJ, LIFTGATE	23-65
LIFTGATE ADJUSTMENT—XJ	23-63
LIFTGATE GLASS WEATHERSTRIP SEAL REPLACEMENT—YJ	23-125
LIFTGATE GLASS—YJ, HARD TOP	23-124
LIFTGATE HINGE—XJ	23-60
LIFTGATE LATCH/KEY LOCK CYLINDER/ STRIKER—XJ	23-61
LIFTGATE LICENSE PLATE LAMP HOUSING—XJ	23-65
LIFTGATE LICENSE PLATE SCREW ANCHOR AND BUMPER—XJ	23-65
LIFTGATE OPENING WEATHERSTRIP SEAL—XJ	23-64
LIFTGATE PILLAR TRIM COVERS—XJ, B/C-PILLAR	23-88
LIFTGATE SUPPORT ROD BALL STUD REPLACEMENT—XJ	23-63
LIFTGATE SUPPORT ROD CYLINDER DISPOSAL—XJ	23-63
LIFTGATE SUPPORT ROD CYLINDER—XJ	23-62
LIFTGATE TRIM PANEL—XJ	23-59
LIFTGATE WASHER NOZZLE REMOVE/ INSTALL	8K-24
LIFTGATE WASHER SYSTEM	8K-5
LIFTGATE WINDOW GLASS—XJ	23-74
LIFTGATE WIPER ARM REMOVE/INSTALL	8K-17
LIFTGATE WIPER MOTOR REMOVE/ INSTALL	8K-20,8K-6
LIFTGATE WIPER SYSTEM	8K-4
LIFTGATE WIPER/WASHER SWITCH	8K-16,8K-5
LIFTGATE WIPER/WASHER SWITCH REMOVE/INSTALL	8K-24,8K-8
LIFTGATE WIPER/WASHER SYSTEM	8K-10, 8K-16,8K-1
LIFTGATE—XJ	23-58

Description	Group-Page
LIGHT DISPLAY, ABS WARNING	5-3
LIGHT OPERATION, BRAKE WARNING	5-5
LIGHT, SYSTEM WARNING	5-35
LIGHTED VANITY MIRROR TROUBLE DIAGNOSIS—XJ	8L-16
LIGHTED VANITY MIRROR—XJ	8L-16
LIGHTER, CIGAR; HORN/CIGAR LIGHTER	8E-1
LIGHTER, CIGAR; HORN/CIGAR LIGHTER (YJ)	8W-41-1
LIGHTER, CIGAR; INSTRUMENT CLUSTER (XJ)	8W-40-1
LIGHTS, BRAKE WARNING	5-1
LIGHTS (CANADA ONLY)—XJ, DAYTIME RUNNING	8L-15
LIGHTS (CANADA ONLY)—YJ, DAYTIME RUNNING	8L-30
LIMITED SLIP DIFFERENTIAL	3-10
LIMITS, AW-4 OIL PUMP WEAR	21-338
LINE AND FITTING SERVICE, TRANSMISSION COOLER	21-111
LINE FITTINGS, TRANSMISSION COOLER	21-197
LINERS—XJ, REAR WHEELHOUSE FLARES	23-19
LINERS—YJ, WHEELHOUSE SPLASH	23-115
LINK CONNECTOR, DATA; ANTI-LOCK BRAKES (XJ)	8W-32-2
LINK CONNECTOR, DATA; ANTI-LOCK BRAKES (XJ-RHD)	8W-32-2
LINK CONNECTOR, DATA; ANTI-LOCK BRAKES (YJ)	8W-32-2
LINK CONNECTOR, DATA; FUEL/IGNITION (XJ)	8W-30-5
LINK CONNECTOR, DATA; FUEL/IGNITION (YJ)	8W-30-5
LINK CONNECTOR, DATA; TRANSMISSION CONTROLS (XJ-RHD)	8W-31-1
LINK CONNECTOR, DATA; FUEL/IGNITION (XJ-RHD)	8W-30-4
LINK CONNECTOR—PCM INPUT, DATA	14-22
LINK CONNECTOR—PCM OUTPUT, DATA	14-27
LINK, DRAG	19-16,19-20
LINKAGE ADJUSTMENT, SHIFT	21-286,21-309
LINKAGE ADJUSTMENT (YJ), SHIFT	21-100
LINKAGE AND PIVOTS REMOVE/ INSTALL, WINDSHIELD WIPER	8K-17
LINKAGE COMPONENTS, HYDRAULIC	6-1
LINKAGE FLUID, CLUTCH	6-1
LINKAGE INSTALLATION, CLUTCH HYDRAULIC	6-14
LINKAGE REMOVAL, CLUTCH HYDRAULIC	6-13
LINKAGE, STEERING	0-28
LINKAGE—XJ, STEERING	19-16,19-78
LINKAGE—YJ, STEERING	19-19,19-78
LOAD DATA, VEHICLE	Intro.-5
LOAD DATA—XJ, VEHICLE	Intro.-7
LOAD DATA—YJ, VEHICLE	Intro.-8
LOCATIONS, CONNECTOR; CONNECTOR LOCATIONS (XJ)	8W-90-1
LOCATIONS, CONNECTOR; CONNECTOR LOCATIONS (XJ-RHD)	8W-90-1
LOCATIONS, CONNECTOR; CONNECTOR LOCATIONS (YJ)	8W-90-1
LOCATIONS, CONNECTOR; CONNECTOR PIN OUTS (XJ)	8W-80-1
LOCATIONS, CONNECTOR; CONNECTOR PIN OUTS (XJ-RHD)	8W-80-1
LOCATIONS, CONNECTOR; CONNECTOR PIN OUTS (YJ)	8W-80-1
LOCATIONS, CONNECTOR; WIRING DIAGRAMS (XJ)	8W-1
LOCATIONS, CONNECTOR; WIRING DIAGRAMS (XJ-RHD)	8W-1
LOCATIONS, CONNECTOR; WIRING DIAGRAMS (YJ)	8W-1
LOCATIONS, SPLICE; SPLICE LOCATIONS (XJ)	8W-95-1
LOCATIONS, SPLICE; SPLICE LOCATIONS (YJ)	8W-95-1
LOCATIONS, SPLICE; WIRING DIAGRAMS (XJ)	8W-1
LOCATIONS, SPLICE; WIRING DIAGRAMS (XJ-RHD)	8W-1
LOCATIONS, SPLICE; WIRING DIAGRAMS (YJ)	8W-1
LOCATIONS, TRANSMISSION SWITCH AND PLUG	21-34
LOCK COMPONENT OVERHAUL, ADAPTER/EXTENSION HOUSING INSPECTION AND PARK	21-127
LOCK COMPONENT REPLACEMENT, PARK	21-108
LOCK CYLINDER—XJ, DOOR KEY	23-47
LOCK CYLINDER—YJ, FULL-METAL DOOR KEY	23-139
LOCK CYLINDER—YJ, TAILGATE	23-122
LOCK CYLINDER/STRIKER—XJ, LIFTGATE LATCH/KEY	23-61
LOCK HANDLE—YJ, FULL-METAL DOOR LATCH INSIDE RELEASE	23-137
LOCK, HYDROSTATIC	9-4
LOCK MOTOR, POWER	8P-1,8P-7
LOCK MOTOR REMOVE/INSTALL, POWER	8P-8
LOCK RELAY; POWER DOOR LOCKS (XJ)	8W-61-1
LOCK RELAY; POWER DOOR LOCKS (XJ-RHD)	8W-61-1
LOCK RODS—XJ, DOOR INSIDE LATCH RELEASE	23-50
LOCK SWITCH, PASSENGER'S POWER	8P-6
LOCK SWITCH, POWER	8P-1
LOCK SWITCH REMOVE/INSTALL, POWER	8P-8
LOCK SWITCH—2-DOOR (LHD), DRIVER'S POWER	8P-3
LOCK SWITCH—2-DOOR (RHD), DRIVER'S POWER	8P-4
LOCK SWITCH—4-DOOR, DRIVER'S POWER	8P-5
LOCK SYSTEM, POWER	8P-2
LOCKS, POWER DOOR; POWER DOOR LOCKS (XJ)	8W-61-1
LOCKS, POWER DOOR; POWER DOOR LOCKS (XJ-RHD)	8W-61-1
LOCK/UNLOCK RELAY REMOVE/INSTALL, POWER	8P-12
LOCK/UNLOCK RELAYS, POWER	8P-1
LOOP MODES OF OPERATION, OPEN LOOP/CLOSED	14-30
LOOP/CLOSED LOOP MODES OF OPERATION, OPEN	14-30
LOW FUEL WARNING LAMP; INSTRUMENT CLUSTER (XJ)	8W-40-1
LOW SPEED KNOCK; FRONT SUSPENSION AND AXLE	2-19
LOW SPEED KNOCK; REAR SUSPENSION AND AXLES	3-10
LOW WASHER FLUID WARNING LAMP; INSTRUMENT CLUSTER (XJ)	8W-40-2
LOW WASHER FLUID WARNING LAMP; INSTRUMENT CLUSTER (XJ-RHD)	8W-40-2
LOWER SUSPENSION ARM	2-13
LOW-LINE GAUGE CLUSTER	8E-8
LOW-PRESSURE HIGH-PRESSURE CUT-OFF SWITCH	24-15,24-16
LUBRICANT AND FILL LEVEL, TRANSFER CASE	21-284
LUBRICANT CHANGE; FRONT SUSPENSION AND AXLE	2-23
LUBRICANT CHANGE; REAR SUSPENSION AND AXLES	3-13,3-31
LUBRICANT, RECOMMENDED	21-2
LUBRICANT SPECIFICATIONS; FRONT SUSPENSION AND AXLE	2-22
LUBRICANT SPECIFICATIONS; REAR SUSPENSION AND AXLES	3-13,3-31
LUBRICANT SPECIFICATIONS, BODY	0-33
LUBRICANT, TRANSMISSION	21-34
LUBRICANT/CAPACITY/FILL LEVEL, RECOMMENDED	21-307
LUBRICANTS, CHASSIS COMPONENT AND WHEEL BEARING	0-28
LUBRICANTS, CLASSIFICATION OF	0-2
LUBRICATION AND REPLACEMENT PARTS RECOMMENDATION	0-2
LUBRICATION, CLUTCH COMPONENT	6-10
LUBRICATION, COMPONENTS REQUIRING NO	0-2
LUBRICATION SYSTEM	9-37,9-79
LUG NUT, WHEEL	22-12
LUGGAGE RACK—XJ	23-28
MAIN BEARING FITTING CHART	9-48,9-90
MAIN BEARINGS, CRANKSHAFT	9-45,9-87
MAIN CLUSTER	8E-30
MAIN CLUSTER, 3 X 7.25	8E-43
MAIN OIL SEALS, REAR	9-49,9-89
MAINTENANCE, EMISSION CONTROL SYSTEM	0-4
MAINTENANCE, ENGINE	0-15
MAINTENANCE SCHEDULES	0-4
MAJOR COMPONENT IDENTIFICATION	Intro.-5
MALFUNCTION INDICATOR LAMP (MIL); FUEL/IGNITION (XJ)	8W-30-5
MALFUNCTION INDICATOR LAMP (MIL); FUEL/IGNITION (YJ)	8W-30-5
MALFUNCTION INDICATOR LAMP (MIL); INSTRUMENT CLUSTER (XJ)	8W-40-2
MALFUNCTION INDICATOR LAMP (MIL); INSTRUMENT CLUSTER (XJ-RHD)	8W-40-1
MALFUNCTION INDICATOR LAMP (MIL); FUEL/IGNITION (XJ-RHD)	8W-30-4
MALFUNCTION INDICATOR LAMP—PCM OUTPUT	14-28
MALFUNCTIONS, DIAGNOSING PARKING BRAKE	5-8
MANIFOLD ABSOLUTE PRESSURE (MAP) SENSOR; FUEL SYSTEM	14-63
MANIFOLD ABSOLUTE PRESSURE (MAP) SENSOR; FUEL/IGNITION (YJ)	8W-30-4
MANIFOLD ABSOLUTE PRESSURE (MAP) SENSOR; IGNITION SYSTEMS	8D-23,8D-5
MANIFOLD ABSOLUTE PRESSURE (MAP) SENSOR TEST; FUEL SYSTEM	14-47
MANIFOLD ABSOLUTE PRESSURE (MAP) SENSOR TEST; IGNITION SYSTEMS	8D-11
MANIFOLD ABSOLUTE PRESSURE (MAP) SENSOR—PCM INPUT	14-23
MANIFOLD ABSOLUTE PRESSURE SENSOR; FUEL/IGNITION (XJ)	8W-30-4
MANIFOLD ABSOLUTE PRESSURE SENSOR; FUEL/IGNITION (XJ-RHD)	8W-30-4
MANIFOLD AIR TEMPERATURE SENSOR, INTAKE; FUEL SYSTEM	14-60
MANIFOLD AIR TEMPERATURE SENSOR, INTAKE; IGNITION SYSTEMS	8D-23,8D-5
MANIFOLD AIR TEMPERATURE SENSOR TEST, INTAKE; FUEL SYSTEM	14-46
MANIFOLD AIR TEMPERATURE SENSOR TEST, INTAKE; IGNITION SYSTEMS	8D-11
MANIFOLD AIR TEMPERATURE SENSOR—PCM INPUT, INTAKE	14-22
MANIFOLD GAUGE SET	24-7
MANIFOLD, INTAKE	14-63
MANIFOLD LEAKAGE DIAGNOSIS, INTAKE	9-5
MANIFOLD—2.5L ENGINE, ENGINE EXHAUST	11-7
MANIFOLD—2.5L ENGINE, INTAKE	11-7
MANIFOLD—4.0L ENGINE, ENGINE EXHAUST	11-7
MANIFOLD—4.0L ENGINE, INTAKE	11-8
MANUAL FIRST GEAR (1) POSITION, HYDRAULIC FLOW IN	21-97
MANUAL SECOND (2) RANGE, HYDRAULIC FLOW IN	21-96
MANUAL SHIFTING TEST	21-177
MANUAL STEERING GEAR; LUBRICATION AND MAINTENANCE	0-30
MANUAL STEERING GEAR; STEERING	19-37, 19-78
MANUAL STEERING GEAR SPECIFICATIONS	19-46
MANUAL STEERING SYSTEM DIAGNOSIS	19-38
MANUAL TRANSMISSION	0-22
MANUAL TRANSMISSION, AX 15	21-33
MANUAL TRANSMISSION, AX 4/5	21-1
MANUAL TRANSMISSION, SELECTIVE SNAP RING CHART—AX 15	21-334
MANUAL TRANSMISSION UP-SHIFT LAMP	8W-40-2
MANUAL VALVE SHAFT OVERHAUL	21-215
MANUAL VALVE SHAFT SEAL REPLACEMENT	21-187
MARKER LAMP BULB REPLACEMENT—XJ, SIDE	8L-10
MARKER LAMP BULB REPLACEMENT—YJ, SIDE	8L-25
MASTER CYLINDER AND COMBINATION VALVE INSTALLATION (WITH ABS)	5-20
MASTER CYLINDER AND COMBINATION VALVE REMOVAL (WITH ABS)	5-17
MASTER CYLINDER BENCH BLEEDING	5-21

Description	Group-Page
MASTER CYLINDER, CLUTCH	0-22
MASTER CYLINDER INSTALLATION (NON-ABS)	5-16
MASTER CYLINDER OVERHAUL (4-CYLINDER MODELS)	5-16
MASTER CYLINDER REMOVAL (NON-ABS)	5-15
MASTER CYLINDER—COMBINATION VALVE	5-15
MASTER CYLINDER/POWER BOOSTER TEST	5-8
MASTER CYLINDER/POWER BRAKE BOOSTER	5-34
MATCH MOUNTING	22-7
MATERIAL, BRAKELINING	5-1
MATS—XJ, CARPETS AND FLOOR	23-99
MEASUREMENT AND ADJUSTMENT, DIFFERENTIAL SHIM PACK	2-43
MEASUREMENT AND ASSEMBLY, PINION	3-22
MEASUREMENT AND INSTALLATION, DIFFERENTIAL	3-25
MEASUREMENT AND TORQUE SPECIFICATIONS	Intro.-11
MEASUREMENT, DIFFERENTIAL AND PINION	2-40
MEASUREMENT, UNIVERSAL JOINT ANGLE	16-4
MEASUREMENTS AND ADJUSTMENTS, ALIGNMENT	2-8
MEASURING WITH PLASTIGAGE	9-3
MECHANISM, ARMING/DISARMING; RESTRAINT SYSTEMS	8M-2
MECHANISM, ARMING/DISARMING; STEERING	19-48
MECHANISM, AUTOMATIC TRANSMISSION SHIFTER/IGNITION INTERLOCK	19-55
MECHANISM, SHIFT	21-307
MEMORY, RADIO; RADIO (XJ)	8W-47-1
MEMORY, RADIO; RADIO (XJ-RHD)	8W-47-1
MEMORY, RADIO; RADIO (YJ)	8W-47-1
METAL DOOR MIRROR (EXTERNAL)—YJ, HALF	23-121
METHODS AND PARTS USAGE, INSTALLATION	6-4
METRIC AND ENGLISH/SAE CONVERSION	Intro.-11
METRIC CONVERSION	Intro.-16
METRIC, THREAD NOTATION—SAE	Intro.-13
(MFI)—COMPONENT DESCRIPTION/ SYSTEM OPERATION, MULTI-PORT FUEL INJECTION	14-19
(MFI)—COMPONENT REMOVAL/ INSTALLATION, MULTI-PORT FUEL INJECTION	14-58
(MFI)—GENERAL DIAGNOSIS, MULTI-PORT FUEL INJECTION	14-35
MINI-CONSOLE WITH FLOOR SHIFT—XJ	23-94
MINI-FLOOR CONSOLE—XJ	23-94
MIRROR (EXTERNAL)—YJ, HALF METAL DOOR	23-121
MIRROR LAMPS, VISOR VANITY; INTERIOR LIGHTING (XJ)	8W-44-2
MIRROR LAMPS, VISOR VANITY; INTERIOR LIGHTING (XJ-RHD)	8W-44-1
MIRROR, POWER	8T-1
MIRROR REMOVE/INSTALL, POWER	8T-4
MIRROR RETAINING BRACKET—YJ, REARVIEW	23-144
MIRROR SUPPORT BRACKET REPLACEMENT—XJ, INTERIOR REARVIEW	23-68
MIRROR SWITCH CONTINUITY (LEFT POSITION), POWER	8T-3
MIRROR SWITCH CONTINUITY (RIGHT POSITION), POWER	8T-3
MIRROR SWITCH, POWER	8T-1,8T-2
MIRROR SWITCH REMOVE/INSTALL, POWER	8T-4
MIRROR SYSTEM, POWER	8T-1
MIRROR TROUBLE DIAGNOSIS—XJ, LIGHTED VANITY	8L-16
MIRROR—XJ, INTERIOR REARVIEW	23-66
MIRROR—XJ, LIGHTED VANITY	8L-16
MIRROR—YJ, REARVIEW	23-144
MIRRORS, POWER; POWER MIRRORS (XJ)	8W-62-1
MIRRORS, POWER; POWER MIRRORS (XJ-RHD)	8W-62-1
MIRRORS—XJ, EXTERNAL	23-27
MISALIGNMENT, CLUTCH	6-3
MISALIGNMENT, CLUTCH HOUSING	6-4
MISS, INJECTOR DIAGNOSIS—VEHICLE RUNS ROUGH AND/OR HAS A	14-52
MODE, ABS OPERATION IN ANTILOCK BRAKING	5-36
MODE, ABS OPERATION IN NORMAL BRAKING	5-35
MODEL 30 AXLE	2-49
MODEL 30 AXLE AND TUBE AXLE (2WD)	2-22
MODEL 30 FRONT AXLE	2-49
MODEL 35 AXLE	3-13,3-51
MODELS, BELT TENSION—EXCEPT RIGHT HAND DRIVE (RHD)	7-45
MODELS, IGNITION SWITCH—XJ	8D-26
MODELS, IGNITION SWITCH—YJ	8D-29
MODELS WITH 4.0L 6-CYLINDER ENGINE, AUXILIARY ELECTRIC COOLING FAN—XJ	7-35
MODELS WITH RIGHT HAND DRIVE, AUTOMATIC BELT TENSIONER—XJ	7-42
MODELS WITH RIGHT HAND DRIVE, BELT SERVICE—XJ	7-42
MODES OF OPERATION, OPEN LOOP/CLOSED LOOP	14-30
MODULE, AIRBAG	8M-1
MODULE, BUZZER	8U-1,8U-2
MODULE, CHIME/BUZZER; INTERIOR LIGHTING (XJ)	8W-44-2
MODULE, CHIME/BUZZER; INTERIOR LIGHTING (XJ-RHD)	8W-44-2
MODULE, DAYTIME RUNNING LAMP (DRL); FRONT LIGHTING (XJ)	8W-50-2
MODULE, DIMMING; FRONT LIGHTING (XJ-RHD)	8W-50-1
MODULE, FUEL PUMP; FUEL SYSTEM	14-61, 14-3
MODULE, FUEL PUMP; FUEL/IGNITION (XJ)	8W-30-2
MODULE, FUEL PUMP; FUEL/IGNITION (YJ)	8W-30-2
MODULE, FUEL PUMP; FUEL/IGNITION (XJ-RHD)	8W-30-2
MODULE HANDLING, AIRBAG	8M-2
MODULE, HEADLAMP DELAY; FRONT LIGHTING (XJ)	8W-50-2
MODULE, HEADLAMP DELAY; FRONT LIGHTING (XJ-RHD)	8W-50-1
MODULE, INTERMITTENT WIPE	8K-4
MODULE, KEYLESS ENTRY	8P-1,8P-7
MODULE (PCM) 60-WAY CONNECTOR, POWERTRAIN CONTROL	14-40
MODULE (PCM), POWERTRAIN CONTROL; EMISSION CONTROL SYSTEMS	25-7
MODULE (PCM), POWERTRAIN CONTROL; FUEL SYSTEM	14-20,14-64
MODULE (PCM), POWERTRAIN CONTROL; IGNITION SYSTEMS	8D-11,8D-23, 8D-5
MODULE, POWERTRAIN CONTROL	8H-1,8H-7
MODULE, REMOTE KEYLESS ENTRY	8W-61-1
MODULE REMOVE/INSTALL, AIRBAG	8M-3
MODULE REMOVE/INSTALL, KEYLESS ENTRY	8P-10
MODULE REMOVE—INSTALL, AIRBAG	19-49
MODULE REPLACEMENT—XJ, DRL	8L-15
MODULE REPLACEMENT—XJ, HEADLAMP DELAY	8L-14
MODULE REPLACEMENT—YJ, DRL	8L-30
MODULE SCHEMATIC - YJ, BUZZER	8U-4
MODULE (TCM) SERVICE, TRANSMISSION CONTROL	21-183
MODULE, TRANSMISSION CONTROL; TRANSMISSION CONTROLS (XJ-RHD)	8W-31-1
MODULE—4.0L ENGINE ONLY, TRANSMISSION CONTROL; TRANSMISSION CONTROLS (XJ)	8W-31-1
MODULE—CANADIAN VEHICLES ONLY, DAYTIME RUNNING LAMP (DRL)	8W-50-2
MODULE—XJ, SENTINEL HEADLAMP DELAY	8L-14
MOLDING/CLADDING—XJ, BODY SIDE	23-20
MOLDING—XJ, DRIP RAIL	23-25
MOLDING—XJ, WINDSHIELD REVEAL	23-66
MOLDING—XJ, WINDSHIELD SIDE	23-86
MOLDING—YJ, BODY SIDE STEP	23-115
MOLDING—YJ, WINDSHIELD REVEAL	23-144
MOLDINGS—XJ, DOOR WINDOW EXTERIOR	23-54
MOTOR, A/C BLOWER	24-35
MOTOR, A/C-HEATER BLOWER; AIR CONDITIONING/HEATER (YJ)	8W-42-2
MOTOR, BLOWER; AIR CONDITIONING/ HEATER (XJ)	8W-42-1
MOTOR, BLOWER; AIR CONDITIONING/ HEATER (XJ-RHD)	8W-42-1
MOTOR, BLOWER; HEATING AND AIR CONDITIONING	24-17
MOTOR DIAGNOSIS (CONT'D), DISCONNECT AXLE/SHIFT	2-30
MOTOR DIAGNOSIS, DISCONNECT AXLE/SHIFT	2-29
MOTOR, FRESH AIR DOOR VACUUM	24-34
MOTOR (HEATING), BLOWER	24-33
MOTOR, IDLE AIR CONTROL (IAC); FUEL SYSTEM	14-62
MOTOR, IDLE AIR CONTROL (IAC); FUEL/IGNITION (XJ)	8W-30-2
MOTOR, IDLE AIR CONTROL (IAC); FUEL/IGNITION (YJ)	8W-30-2
MOTOR, IDLE AIR CONTROL (IAC); FUEL/IGNITION (XJ-RHD)	8W-30-2
MOTOR, POWER LOCK	8P-1,8P-7
MOTOR, POWER WINDOW	8S-1,8S-2
MOTOR, RADIATOR FAN RELAY; AIR CONDITIONING/HEATER (XJ)	8W-42-2
MOTOR, RADIATOR FAN RELAY; AIR CONDITIONING/HEATER (XJ-RHD)	8W-42-2
MOTOR RELAY, ABS PUMP; ANTI-LOCK BRAKES (XJ)	8W-32-1
MOTOR RELAY, ABS PUMP; ANTI-LOCK BRAKES (XJ-RHD)	8W-32-1
MOTOR RELAY, ABS PUMP; ANTI-LOCK BRAKES (YJ)	8W-32-1
MOTOR RELAY TEST, STARTER	14-51
MOTOR REMOVE/INSTALL, LIFTGATE WIPER	8K-20,8K-6
MOTOR REMOVE/INSTALL, POWER LOCK	8P-8
MOTOR REMOVE/INSTALL, POWER WINDOW	8S-7
MOTOR REMOVE/INSTALL, WINDSHIELD WIPER	8K-19,8K-6
MOTOR REPLACEMENT, A/C RECIRCULATING DOOR VACUUM	24-27
MOTOR REPLACEMENT, HEATER/ DEFROSTER/INSTRUMENT PANEL OUTLET VACUUM	24-26
MOTOR RESISTORS REPLACEMENT, BLOWER	24-31
MOTOR SPEED SENSOR, PUMP; ANTI-LOCK BRAKES (XJ)	8W-32-2
MOTOR SPEED SENSOR, PUMP; ANTI-LOCK BRAKES (XJ-RHD)	8W-32-2
MOTOR SPEED SENSOR, PUMP; ANTI-LOCK BRAKES (YJ)	8W-32-1
MOTOR SWITCH, BLOWER	24-16
MOTOR SWITCH REPLACEMENT, BLOWER MOTOR/AIR DOOR	24-32
MOTOR TEST, IDLE AIR CONTROL	14-49
MOTOR/AIR DOOR MOTOR SWITCH REPLACEMENT, BLOWER	24-32
MOTOR/FAN REPLACEMENT, BLOWER	24-24
MOTOR—PCM OUTPUT, IDLE AIR CONTROL (IAC)	14-27
MOUNTED STOP LAMP (CHMSL)—XJ, CENTER HIGH	8L-12
MOUNTED STOP LAMP (CHMSL)—YJ, CENTER HIGH	8L-28
MOUNTING, MATCH	22-7
MOUNT—REAR, ENGINE	9-16,9-57
MOUNTS—FRONT, ENGINE	9-14,9-56
MUFFLER AND EXHAUST TAILPIPE—XJ VEHICLES	11-5
MUFFLER AND EXHAUST TAILPIPE—YJ VEHICLES	11-6
MULTI-FUNCTION SWITCH - XJ	8J-4
MULTI-FUNCTION SWITCH REMOVE/ INSTALL - XJ	8J-5
MULTI-FUNCTION SWITCH SERVICE PROCEDURES—XJ	8L-11

Description	Group-Page
MULTI-FUNCTION SWITCH TESTING PROCEDURES—XJ	8L-4
MULTI-PORT FUEL INJECTION (MFI)—COMPONENT DESCRIPTION/ SYSTEM OPERATION	14-19
MULTI-PORT FUEL INJECTION (MFI)—COMPONENT REMOVAL/ INSTALLATION	14-58
MULTI-PORT FUEL INJECTION (MFI)—GENERAL DIAGNOSIS	14-35
NAMEPLATES (ADHESIVE-BACKED)—YJ, EXTERIOR	23-120
NAMEPLATES—XJ, EXTERIOR	23-26
NEUTRAL SWITCH, PARK	14-63
NO LUBRICATION, COMPONENTS REQUIRING	0-2
NOISE DIAGNOSIS, 2.5L STARTER	8A-16
NOISE DIAGNOSIS, STARTER	8A-16
NOISE, GEAR AND BEARING; FRONT SUSPENSION AND AXLE	2-18
NOISE, GEAR AND BEARING; REAR SUSPENSION AND AXLES	3-9
NOISE OR VIBRATION, TIRE	22-4
NOISE SUPPRESSION, RADIO	8F-2
NOISE/VIBRATION DIAGNOSIS, AXLE; FRONT SUSPENSION AND AXLE	2-18
NOISE/VIBRATION DIAGNOSIS, AXLE; REAR SUSPENSION AND AXLES	3-9
NO-LEAD FUEL TANK FILLER TUBE	14-13
NON-INTERMITTENT WIPE SWITCH TESTING	8K-14
NON-TILT STEERING COLUMN	19-60
NORMAL BRAKING MODE, ABS OPERATION IN	5-35
NORMAL OPERATING CONDITIONS	5-3
NOTATION—SAE AND METRIC, THREAD	Intro.-13
NOTES, CAUTIONS, AND WARNINGS; WIRING DIAGRAMS—GENERAL INFORMATION (XJ)	8W-1
NOZZLE AND DUCT, DEFROSTER	24-33
NOZZLE REMOVE/INSTALL, LIFTGATE WASHER	8K-24
NOZZLE/TUBE—XJ, FUEL FILLER	23-26
NP231 SERVICE DIAGNOSIS	21-285
NP231 TRANSFER CASE	21-283,21-305
NP231 TRANSFER CASE, LEGEND	21-306
NP231/NP242 TORQUE SPECIFICATIONS	21-344
NP242 SERVICE DIAGNOSIS	21-308
NP242 TRANSFER CASE	21-307,21-331
NP242 TRANSFER CASE, LEGEND	21-332
NUMBER (VIN) DECODING, VEHICLE IDENTIFICATION	Intro.-4
NUMBER (VIN) PLATE, VEHICLE IDENTIFICATION	Intro.-4
NUT TIGHTENING, WHEEL	5-54,5-59
NUT, WHEEL LUG	22-12
(OHMS)—COOLANT TEMPERATURE SENSOR/MANIFOLD AIR TEMPERATURE, SENSOR RESISTANCE	14-46
OIL CHANGE AND FILTER REPLACEMENT, ENGINE	0-16
OIL COOLERS, TRANSMISSION	7-36
OIL, ENGINE	0-15
OIL FILTER, ENGINE	0-17
OIL FILTER REPLACEMENT	21-103
OIL PAN	9-36,9-77
OIL PRESSURE, ENGINE	9-7
OIL PRESSURE GAUGE	8W-40-2
OIL PRESSURE WARNING LAMP; INSTRUMENT CLUSTER (XJ)	8W-40-2
OIL PRESSURE WARNING LAMP; INSTRUMENT CLUSTER (XJ-RHD)	8W-40-1
OIL PUMP	9-39,9-81
OIL PUMP OVERHAUL	21-131,21-216
OIL PUMP SEAL REPLACEMENT	21-199
OIL PUMP WEAR LIMITS, AW-4	21-338
OIL, REFRIGERANT	24-12
OIL SEAL REPLACEMENT, INNER AXLE SHAFT	2-35
OIL SEAL REPLACEMENT, TIMING CASE COVER	9-30,9-73
OIL SEALS, REAR MAIN	9-49,9-89
OIL SEALS, VALVE SPRINGS	9-23
ON-BOARD DIAGNOSTIC SYSTEM, USING; BATTERY/STARTING/CHARGING SYSTEMS DIAGNOSTICS	8A-22
ON-BOARD DIAGNOSTIC SYSTEM, USING; VEHICLE SPEED CONTROL SYSTEM	8H-5
ON-BOARD DIAGNOSTICS	8D-15
ON-BOARD DIAGNOSTICS (OBD); COOLING SYSTEM	7-4
ON-BOARD DIAGNOSTICS (OBD); FUEL SYSTEM	14-51
ONLY, DAYTIME RUNNING LAMP (DRL) MODULE—CANADIAN VEHICLES; FRONT LIGHTING (YJ)	8W-50-2
ONLY, POWER STEERING PRESSURE SWITCH—2.5L ENGINE	14-63
ONLY, TORQUE CONVERTER CLUTCH (TCC) SOLENOID AND RELAY—2.5L ENGINE; TRANSMISSION CONTROLS (XJ)	8W-31-1
ONLY, TRANSMISSION CONTROL MODULE—4.0L ENGINE; TRANSMISSION CONTROLS (XJ)	8W-31-1
OPENING PANEL (GOP)—XJ, GRILLE AND GRILLE	23-3
OPENING WEATHERSTRIP SEAL—XJ, LIFTGATE	23-64
OPENING WEATHERSTRIP SEALS—XJ, DOOR WINDOW GLASS AND DOOR	23-55
OPERATING SPECIFICATIONS, PUMP	19-3
OPERATION, ACCELERATION SWITCH	5-37
OPERATION, AIR CONDITIONING; AIR CONDITIONING/HEATER (XJ)	8W-42-2
OPERATION, AIR CONDITIONING; AIR CONDITIONING/HEATER (XJ-RHD)	8W-42-2
OPERATION AND APPLICATION CHARTS, GEARTRAIN	21-169
OPERATION AND SERVICE, ABS	5-33
OPERATION AND WEAR COMPENSATION, CALIPER	5-45
OPERATION, BRAKE WARNING LIGHT	5-5
OPERATION, CLUTCH	6-2
OPERATION, COMPONENT IDENTIFICATION/SYSTEM	8D-1
OPERATION, ECU	5-37
OPERATION, HCU	5-36
OPERATION, HEATER AND A/C	24-1
OPERATION IN ANTILOCK BRAKING MODE, ABS	5-36
OPERATION IN NORMAL BRAKING MODE, ABS	5-35
OPERATION, MULTI-PORT FUEL INJECTION (MFI)—COMPONENT DESCRIPTION/SYSTEM	14-19
OPERATION, PARKING BRAKE	5-60
OPERATION, POWER BRAKE BOOSTER	5-23
OPERATION, POWER STEERING PUMP—INITIAL	19-15
OPERATION, WHEEL SPEED SENSOR	5-37
ORDER—2.5L 4-CYLINDER ENGINE, ENGINE FIRING	8D-32
ORDER—4.0L 6-CYLINDER ENGINE, ENGINE FIRING	8D-32
O-RING SEAL, FLOW CONTROL VALVE FITTING	19-14
ORNAMENTATION, WHEEL	22-6
OUTER SCUFF PLATES—XJ	23-89
OUTLET VACUUM MOTOR REPLACEMENT, HEATER/DEFROSTER/ INSTRUMENT PANEL	24-26
OUTPUT, AIR CONDITIONING (A/C) CLUTCH RELAY—PCM	14-26
OUTPUT, AUTO SHUTDOWN (ASD) RELAY—PCM	14-26
OUTPUT, DATA LINK CONNECTOR—PCM	14-27
OUTPUT, EMR LAMP—PCM	14-27
OUTPUT, FUEL INJECTORS—PCM	14-27
OUTPUT, FUEL PUMP RELAY—PCM	14-27
OUTPUT, GENERATOR FIELD—PCM	14-27
OUTPUT, GENERATOR LAMP—PCM	14-27
OUTPUT, IDLE AIR CONTROL (IAC) MOTOR—PCM	14-27
OUTPUT, IGNITION COIL—PCM	14-28
OUTPUT, MALFUNCTION INDICATOR LAMP—PCM	14-28
OUTPUT, RADIATOR FAN RELAY—PCM	14-28
OUTPUT, SCI TRANSMIT—PCM	14-29
OUTPUT, SHIFT INDICATOR—PCM	14-29
OUTPUT, SPEED CONTROL—PCM	14-29
OUTPUT, TACHOMETER—PCM	14-29
OUTPUT, TORQUE CONVERTER CLUTCH RELAY—PCM	14-29
OUTPUT VOLTAGE SPECIFICATIONS	8A-23
OUTS, TAKE; WIRING DIAGRAMS—GENERAL INFORMATION (XJ)	8W-2
OVERDRIVE COMPONENTS, FOURTH GEAR	21-167
OVERDRIVE PLANETARY GEAR AND CLUTCH OVERHAUL	21-218
OVERDRIVE SUPPORT OVERHAUL	21-226
OVERHAUL, 30RH/32RH TRANSMISSION	21-119
OVERHAUL (4-CYLINDER MODELS), MASTER CYLINDER	5-16
OVERHAUL, ADAPTER/EXTENSION HOUSING INSPECTION AND PARK LOCK COMPONENT	21-127
OVERHAUL, AW-4 TRANSMISSION	21-201
OVERHAUL, DIFFERENTIAL	3-46
OVERHAUL, DIRECT CLUTCH	21-228
OVERHAUL, FIRST-REVERSE BRAKE PISTON AND TRANSMISSION CASE	21-247
OVERHAUL, FORWARD CLUTCH	21-232
OVERHAUL, FRONT CLUTCH	21-134
OVERHAUL, FRONT PLANETARY GEAR	21-237
OVERHAUL, GOVERNOR AND PARK GEAR	21-127
OVERHAUL, MANUAL VALVE SHAFT	21-215
OVERHAUL, OIL PUMP	21-131,21-216
OVERHAUL OR FLUID/FILTER CHANGE, REFILLING AFTER	21-100,21-182
OVERHAUL, OVERDRIVE PLANETARY GEAR AND CLUTCH	21-218
OVERHAUL, OVERDRIVE SUPPORT	21-226
OVERHAUL, OVERRUNNING CLUTCH—LOW-REVERSE DRUM—REAR SUPPORT	21-125
OVERHAUL, PLANETARY GEAR TRAIN	21-141
OVERHAUL, REAR CLUTCH	21-138
OVERHAUL, REAR SERVO AND BAND	21-146
OVERHAUL, TRANSFER CASE DISASSEMBLY	21-289,21-310
OVERHAUL, TRANSMISSION DISASSEMBLY	21-37,21-5
OVERHAUL, TRANSMISSION VALVE BODY	21-250
OVERHAUL, WHEEL CYLINDER	5-57
OVERHEAD CONSOLE; OVERHEAD CONSOLE (XJ)	8W-49-1
OVERHEAD CONSOLE; OVERHEAD CONSOLE (XJ-RHD)	8W-49-1
OVERHEAD CONSOLE REMOVE/INSTALL	8C-6
OVERHEAD CONSOLE—XJ; BODY COMPONENTS—XJ VEHICLES	23-93
OVERHEAD CONSOLE—XJ; LAMPS	8L-17
OXYGEN (O2S) SENSOR; EMISSION CONTROL SYSTEMS	25-6,25-7
OXYGEN (O2S) SENSOR; FUEL SYSTEM	14-63
OXYGEN (O2S) SENSOR; IGNITION SYSTEMS	8D-23,8D-5
OXYGEN (O2S) SENSOR TESTS	8D-15
OXYGEN (O2S) SENSOR—PCM INPUT	14-24
OXYGEN SENSOR, HEATED; FUEL/ IGNITION (XJ)	8W-30-3
OXYGEN SENSOR, HEATED; FUEL/ IGNITION (YJ)	8W-30-3
OXYGEN SENSOR, HEATED; FUEL/ IGNITION (XJ-RHD)	8W-30-3
OXYGEN SENSOR (O2S) HEATING ELEMENT TEST	14-48
PACK MEASUREMENT AND ADJUSTMENT, DIFFERENTIAL SHIM	2-43
PACK REQUIREMENTS, AW-4 CLUTCH AND BRAKE	21-341
PACKAGE CLUSTER, GAUGE	8E-31,8E-43
PAINT	23-158
PAINT AND TRIM REPAIR PRODUCTS—XJ, AFTERMARKET	23-159
PAINT AND TRIM REPAIR PRODUCTS—YJ, AFTERMARKET	23-160
PAINTED SURFACE TOUCH-UP	23-158
PAN, OIL	9-36,9-77
PANEL AND GAUGES—YJ, INSTRUMENT	8E-24
PANEL COMPONENTS—YJ, INSTRUMENT	23-152
PANEL DIMMER SWITCH REMOVE/ INSTALL, HEADLAMP OR	8E-42
PANEL EXTENSION—XJ, QUARTER TRIM	23-87

Description	Group-Page
PANEL (GOP)—XJ, GRILLE AND GRILLE OPENING	23-3
PANEL ILLUMINATION LAMPS, INSTRUMENT; INTERIOR LIGHTING (XJ)	8W-44-1
PANEL ILLUMINATION LAMPS, INSTRUMENT; INTERIOR LIGHTING (XJ-RHD)	8W-44-1
PANEL, INSTRUMENT	8E-24,8E-1
PANEL INSULATOR PANEL—XJ, DASH	23-12
PANEL LAMP, ACCESSORY LAMP AND HEATER CONTROL; INTERIOR LIGHTING (YJ)	8W-44-1
PANEL OUTLET VACUUM MOTOR REPLACEMENT, HEATER/DEFROSTER/ INSTRUMENT	24-26
PANEL REMOVE/INSTALL, INSTRUMENT	8E-20
PANEL—XJ, DASH PANEL INSULATOR	23-12
PANEL—XJ, DOOR TRIM	23-31
PANEL—XJ, FRONT INNER SCUFF PLATE/COWL SIDE TRIM	23-86
PANEL—XJ, LIFTGATE TRIM	23-59
PANEL—YJ, FULL-METAL DOOR TRIM	23-137
PANEL—YJ, HOOD INSULATOR	23-107
PANEL—YJ, INSTRUMENT	23-151
PANELS AND SCUFF PLATES—XJ, INTERIOR TRIM	23-84
PANELS—XJ, QUARTER AND WHEELHOUSE TRIM	23-87
PARK GEAR OVERHAUL, GOVERNOR	21-127
PARK GEAR SERVICE, GOVERNOR	21-105
PARK INTERLOCK CABLE ADJUSTMENT	21-195
PARK INTERLOCK CABLE ADJUSTMENT (XJ)	21-101
PARK LOCK COMPONENT OVERHAUL, ADAPTER/EXTENSION HOUSING INSPECTION	21-127
PARK LOCK COMPONENT REPLACEMENT	21-108
PARK NEUTRAL SWITCH	14-63
PARK ROD AND PAWL SERVICE	21-190
PARKING BRAKE CABLE TENSIONER ADJUSTMENT (XJ/YJ)	5-69
PARKING BRAKE CABLE TENSIONER REPLACEMENT (XJ)	5-66
PARKING BRAKE FRONT CABLE REPLACEMENT (YJ)	5-67
PARKING BRAKE HANDLE COVER—XJ	23-94
PARKING BRAKE LEVER INSTALLATION (XJ WITH FULL CONSOLE)	5-64
PARKING BRAKE LEVER INSTALLATION (XJ WITH MINI CONSOLE)	5-63
PARKING BRAKE LEVER INSTALLATION (XJ WITHOUT CONSOLE)	5-65
PARKING BRAKE LEVER REMOVAL (XJ WITH FULL CONSOLE)	5-63
PARKING BRAKE LEVER REMOVAL (XJ WITH MINI CONSOLE)	5-62
PARKING BRAKE LEVER REMOVAL (XJ WITHOUT CONSOLE)	5-64
PARKING BRAKE MALFUNCTIONS, DIAGNOSING	5-8
PARKING BRAKE OPERATION	5-60
PARKING BRAKE PEDAL INSTALLATION (YJ)	5-66
PARKING BRAKE PEDAL REMOVAL (YJ)	5-66
PARKING BRAKE REAR CABLE REPLACEMENT (XJ)	5-67
PARKING BRAKE REAR CABLE REPLACEMENT (YJ)	5-68
PARKING BRAKE SWITCH	5-68
PARKING BRAKES	5-60
PARKING LAMPS; FRONT LIGHTING (XJ)	8W-50-1
PARKING LAMPS; FRONT LIGHTING (XJ-RHD)	8W-50-2
PARKING LAMPS; FRONT LIGHTING (YJ)	8W-50-1
PARK/NEUTRAL POSITION SWITCH; FUEL/IGNITION (XJ)	8W-30-4
PARK/NEUTRAL POSITION SWITCH; FUEL/IGNITION (YJ)	8W-30-4
PARK/NEUTRAL POSITION SWITCH; TRANSMISSION AND TRANSFER CASE	21-183
PARK/NEUTRAL POSITION SWITCH; FUEL/IGNITION (XJ-RHD)	8W-30-4
PARK/NEUTRAL POSITION SWITCH SERVICE	21-109
PARK/NEUTRAL SWITCH—PCM INPUT	14-24
PARK/TURN SIGNAL LAMP BULB REPLACEMENT—XJ, FRONT	8L-9
PARK/TURN SIGNAL LAMP BULB REPLACEMENT—YJ, FRONT	8L-25
PARTS INTERCHANGEABILITY, TRANSMISSION CHANGES	21-67
PARTS RECOMMENDATION, LUBRICATION AND REPLACEMENT	0-2
PASSENGER'S POWER LOCK SWITCH	8P-6
PASSENGER'S POWER WINDOW SWITCH	8S-6
PATTERN ANALYSIS, BACKLASH AND CONTACT; FRONT SUSPENSION AND AXLE	2-45
PATTERN ANALYSIS, BACKLASH AND CONTACT; REAR SUSPENSION AND AXLES	3-27
PATTERN, SHIFT	21-2
PATTERN, TRANSMISSION SHIFT	21-34
PATTERNS, TIRE WEAR	22-4
PAWL SERVICE, PARK ROD	21-190
PCM SYSTEM SCHEMATICS	14-41
PEDAL, ACCELERATOR	14-17
PEDAL AND THROTTLE CABLE, ACCELERATOR	14-17,14-58
PEDAL BUSHINGS, CLUTCH AND BRAKE	0-22
PEDAL INSTALLATION, BRAKE	5-31
PEDAL INSTALLATION, CLUTCH	6-15
PEDAL INSTALLATION (YJ), PARKING BRAKE	5-66
PEDAL REMOVAL, BRAKE	5-31
PEDAL REMOVAL, CLUTCH	6-15
PEDAL REMOVAL (YJ), PARKING BRAKE	5-66
PEDAL TRAVEL SENSOR, BRAKE; ANTI-LOCK BRAKES (YJ)	8W-32-1
PEDAL—BRAKELIGHT SWITCH, POWER BRAKE BOOSTER—BRAKE	5-22
PERFORMANCE, ENGINE	9-2
PERFORMANCE TEMPERATURE AND PRESSURE CHART, XJ	24-13
PERFORMANCE TEMPERATURE AND PRESSURE CHART, YJ	24-13
PERFORMANCE TEST, REFRIGERANT SERVICE	24-11
PERFORMANCE TESTS, AIR CONDITIONING	24-12
PILLAR TRIM COVERS—XJ, B/C-PILLAR AND LIFTGATE	23-88
PILOT BEARING REPLACEMENT	6-12
PIN REPLACEMENT, CAMSHAFT	9-34,9-75
PIN REPLACEMENT—XJ, DOOR HINGE/HINGE	23-52
PINION GEAR ASSEMBLY/INSTALLATION	2-42
PINION GEAR DEPTH INFORMATION; FRONT SUSPENSION AND AXLE	2-39
PINION GEAR DEPTH INFORMATION; REAR SUSPENSION AND AXLES	3-21
PINION GEAR DEPTH VARIANCE; FRONT SUSPENSION AND AXLE	2-40
PINION GEAR DEPTH VARIANCE; REAR SUSPENSION AND AXLES	3-22,3-39
PINION MEASUREMENT AND ASSEMBLY	3-22
PINION MEASUREMENT, DIFFERENTIAL	2-40
PINION REMOVAL/DISASSEMBLY; FRONT SUSPENSION AND AXLE	2-36
PINION REMOVAL/DISASSEMBLY; REAR SUSPENSION AND AXLES	3-19
PINION SEAL REPLACEMENT; FRONT SUSPENSION AND AXLE	2-25
PINION SEAL REPLACEMENT; REAR SUSPENSION AND AXLES	3-33
PINION SHAFT SEAL REPLACEMENT	3-15
PIPE—XJ VEHICLES, EXHAUST	11-3
PIPE—YJ VEHICLES, EXHAUST	11-4
PISTON AND TRANSMISSION CASE OVERHAUL, FIRST-REVERSE BRAKE	21-247
PISTON AND WORM SHAFT REPLACEMENT, RACK	19-32
PISTON CLEARANCE, AW-4 BUSHING	21-339
PISTON SPECIFICATIONS, AW-4 RETAINER	21-340
PISTONS AND CONNECTING RODS	9-39,9-81
PISTONS AND SPRINGS, ACCUMULATOR	21-189
PITMAN ARM	19-17,19-20
PITMAN SHAFT AND SIDE COVER REPLACEMENT	19-28
PITMAN SHAFT SEAL REPLACEMENT	19-37
PITMAN SHAFT SEALS AND BEARING REPLACEMENT	19-34
PITMAN SHAFT SEALS—IN CAR REPLACEMENT	19-23
PIVOTS REMOVE/INSTALL, WINDSHIELD WIPER LINKAGE	8K-17
PLANETARY GEAR AND CLUTCH OVERHAUL, OVERDRIVE	21-218
PLANETARY GEAR OVERHAUL, FRONT	21-237
PLANETARY GEAR TRAIN OVERHAUL	21-141
PLASTIC COMPONENT INSPECTION, RUBBER	0-20
PLASTIC HOSES/TUBING, RUBBER	0-26
PLASTIC INSERT—XJ, REAR QUARTER WINDOW GLASS/REAR QUARTER	23-73
PLASTIGAGE, MEASURING WITH	9-3
PLATE, FRONT SKID	13-1
PLATE, FUEL TANK SKID	13-15,13-3
PLATE LAMP HOUSING—XJ, LIFTGATE LICENSE	23-65
PLATE LAMP—XJ, LICENSE	8L-12
PLATE LAMPS, TAIL LAMPS AND LICENSE	8W-51-1
PLATE LAMPS, TAIL LAMPS AND REAR LICENSE; REAR LIGHTING (XJ)	8W-51-1
PLATE LAMPS, TAIL LAMPS AND REAR LICENSE; REAR LIGHTING (XJ-RHD)	8W-51-1
PLATE REPLACEMENT, SUPPORT	5-58
PLATE SCREW ANCHOR AND BUMPER—XJ, LIFTGATE LICENSE	23-65
PLATE SERVICE, CONVERTER—PUMP SEAL—DRIVE	21-116
PLATE SPECIFICATIONS, 30RH/32RH SNAP RING/THRUST WASHER/THRUST	21-335
PLATE THICKNESS, AW-4 CLUTCH DISC	21-338
PLATE, TRANSFER CASE SKID	13-15,13-3
PLATE, VEHICLE CODE	Intro.-4
PLATE, VEHICLE IDENTIFICATION NUMBER (VIN)	Intro.-4
PLATE/COWL SIDE TRIM PANEL—XJ, FRONT INNER SCUFF	23-86
PLATES—XJ, INTERIOR TRIM PANELS AND SCUFF	23-84
PLATES—XJ, OUTER SCUFF	23-89
PLATES—XJ, VEHICLE, LABELS	Intro.-2
PLATES—YJ, VEHICLE, LABELS	Intro.-3
PLATFORM—XJ, BUCKET SEAT	23-82
PLUG ASSEMBLY REPLACEMENT, ADJUSTER	19-29
PLUG CABLE RESISTANCE, SPARK	8D-14
PLUG, HOUSING END	19-28
PLUG LOCATIONS, TRANSMISSION SWITCH	21-34
PLUG SECONDARY CABLES, SPARK	8D-14, 8D-24
PLUGS, SPARK; IGNITION SYSTEMS	8D-12, 8D-23,8D-32
PLUGS, SPARK; LUBRICATION AND MAINTENANCE	0-20
POLISHING, WET SANDING,BUFFING	23-158
POOR CONNECTIONS, INTERMITTENT; WIRING DIAGRAMS—GENERAL INFORMATION (XJ)	8W-4
POSITION SENSOR, CAMSHAFT; FUEL SYSTEM	14-60
POSITION SENSOR, CAMSHAFT; FUEL/IGNITION (XJ)	8W-30-3
POSITION SENSOR, CAMSHAFT; FUEL/IGNITION (YJ)	8W-30-3
POSITION SENSOR, CAMSHAFT; IGNITION SYSTEMS	8D-17,8D-2
POSITION SENSOR, CAMSHAFT; FUEL/IGNITION (XJ-RHD)	8W-30-3
POSITION SENSOR, CRANKSHAFT; FUEL SYSTEM	14-60
POSITION SENSOR, CRANKSHAFT; FUEL/IGNITION (XJ)	8W-30-3
POSITION SENSOR, CRANKSHAFT; FUEL/IGNITION (YJ)	8W-30-3
POSITION SENSOR, CRANKSHAFT; IGNITION SYSTEMS	8D-17,8D-3
POSITION SENSOR, CRANKSHAFT; FUEL/IGNITION (XJ-RHD)	8W-30-3
POSITION SENSOR TEST, CAMSHAFT; FUEL SYSTEM	14-46
POSITION SENSOR TEST, CAMSHAFT; IGNITION SYSTEMS	8D-6

Description	Group-Page
POSITION SENSOR TEST, CRANKSHAFT; FUEL SYSTEM	14-47
POSITION SENSOR TEST, CRANKSHAFT; IGNITION SYSTEMS	8D-7
POSITION SENSOR TEST, THROTTLE	8D-15
POSITION SENSOR, THROTTLE; FUEL/IGNITION (XJ)	8W-30-4
POSITION SENSOR, THROTTLE; FUEL/IGNITION (YJ)	8W-30-4
POSITION SENSOR, THROTTLE; IGNITION SYSTEMS	8D-5
POSITION SENSOR, THROTTLE; FUEL/IGNITION (XJ-RHD)	8W-30-4
POSITION SENSOR (TPS) SERVICE, THROTTLE	21-193
POSITION SENSOR (TPS) TEST, THROTTLE	14-48
POSITION SENSOR (TPS), THROTTLE; FUEL SYSTEM	14-65
POSITION SENSOR (TPS), THROTTLE; IGNITION SYSTEMS	8D-25
POSITION SENSOR (TPS)—PCM INPUT, THROTTLE	14-25
POSITION SENSOR—PCM INPUT, CAMSHAFT	14-22
POSITION SENSOR—PCM INPUT, CRANKSHAFT	14-22
POSITION SWITCH, PARK/NEUTRAL; FUEL/IGNITION (XJ)	8W-30-4
POSITION SWITCH, PARK/NEUTRAL; FUEL/IGNITION (YJ)	8W-30-4
POSITION SWITCH, PARK/NEUTRAL; TRANSMISSION AND TRANSFER CASE	21-183
POSITION SWITCH, PARK/NEUTRAL; FUEL/IGNITION (XJ-RHD)	8W-30-4
POSITION SWITCH SERVICE, PARK/ NEUTRAL	21-109
POSITIONS, TRANSMISSION RANGES AND SHIFT LEVER	21-166
POWER ANTENNA; RADIO (XJ-RHD)	8W-47-1
POWER BOOSTER CHECK VALVE TEST	5-9
POWER BOOSTER VACUUM TEST	5-9
POWER BRAKE BOOSTER INSTALLATION (XJ WITH ABS)	5-27
POWER BRAKE BOOSTER INSTALLATION (XJ WITHOUT ABS)	5-30
POWER BRAKE BOOSTER INSTALLATION (YJ)	5-30
POWER BRAKE BOOSTER OPERATION	5-23
POWER BRAKE BOOSTER REMOVAL (XJ WITH ABS)	5-24
POWER BRAKE BOOSTER REMOVAL (XJ WITHOUT ABS)	5-29
POWER BRAKE BOOSTER REMOVAL (YJ)	5-30
POWER BRAKE BOOSTER—BRAKE PEDAL—BRAKELIGHT SWITCH	5-22
POWER BRAKE SYSTEM	0-30
POWER (DEVICE) GROUND; FUEL/ IGNITION (XJ)	8W-30-5
POWER (DEVICE) GROUND; FUEL/ IGNITION (YJ)	8W-30-5
POWER (DEVICE) GROUND; FUEL/ IGNITION (XJ-RHD)	8W-30-5
POWER DOOR LOCKS; POWER DOOR LOCKS (XJ)	8W-61-1
POWER DOOR LOCKS; POWER DOOR LOCKS (XJ-RHD)	8W-61-1
POWER GROUND	14-24
POWER LOCK MOTOR	8P-1,8P-7
POWER LOCK MOTOR REMOVE/INSTALL	8P-8
POWER LOCK SWITCH	8P-1
POWER LOCK SWITCH, PASSENGER'S	8P-6
POWER LOCK SWITCH REMOVE/ INSTALL	8P-8
POWER LOCK SWITCH—2-DOOR (LHD), DRIVER'S	8P-3
POWER LOCK SWITCH—2-DOOR (RHD), DRIVER'S	8P-4
POWER LOCK SWITCH—4-DOOR, DRIVER'S	8P-5
POWER LOCK SYSTEM	8P-2
POWER LOCK/UNLOCK RELAY REMOVE/INSTALL	8P-12
POWER LOCK/UNLOCK RELAYS	8P-1
POWER MIRROR	8T-1
POWER MIRROR REMOVE/INSTALL	8T-4
POWER MIRROR SWITCH	8T-1,8T-2
POWER MIRROR SWITCH CONTINUITY (LEFT POSITION)	8T-3
POWER MIRROR SWITCH CONTINUITY (RIGHT POSITION)	8T-3
POWER MIRROR SWITCH REMOVE/ INSTALL	8T-4
POWER MIRROR SYSTEM	8T-1
POWER MIRRORS; POWER MIRRORS (XJ)	8W-62-1
POWER MIRRORS; POWER MIRRORS (XJ-RHD)	8W-62-1
POWER RELAY, ABS; ANTI-LOCK BRAKES (XJ)	8W-32-1
POWER RELAY, ABS; ANTI-LOCK BRAKES (XJ-RHD)	8W-32-1
POWER RELAY, ABS; ANTI-LOCK BRAKES (YJ)	8W-32-1
POWER SEAT; POWER SEAT (XJ)	8W-63-1
POWER SEAT; POWER SEAT (XJ-RHD)	8W-63-1
POWER SEAT ADJUSTER/MOTORS	8R-1,8R-2
POWER SEAT ADJUSTER/MOTORS REMOVE/INSTALL	8R-3
POWER SEAT SWITCH	8R-1,8R-2
POWER SEAT SWITCH CONTINUITY	8R-2
POWER SEAT SWITCH REMOVE/INSTALL	8R-3
POWER STEERING GEAR	19-78
POWER STEERING GEAR, RECIRCULATING BALL	19-21
POWER STEERING GEAR SPECIFICATIONS	19-36
POWER STEERING GEARS, RECIRCULATING-BALL	19-74
POWER STEERING PRESSURE SWITCH; FUEL/IGNITION (XJ)	8W-30-5
POWER STEERING PRESSURE SWITCH; FUEL/IGNITION (YJ)	8W-30-4
POWER STEERING PRESSURE SWITCH—2.5L ENGINE ONLY	14-63
POWER STEERING PRESSURE SWITCH—PCM INPUT	14-24
POWER STEERING PUMP	19-11,19-74,19-78
POWER STEERING PUMP—INITIAL OPERATION	19-15
POWER STEERING SYSTEM	0-29
POWER STEERING SYSTEM DIAGNOSIS	19-3, 19-4,19-5,19-6,19-7,19-8,19-9
POWER WINDOW MOTOR	8S-1,8S-2
POWER WINDOW MOTOR REMOVE/ INSTALL	8S-7
POWER WINDOW SWITCH	8S-1,8S-2
POWER WINDOW SWITCH, PASSENGER'S	8S-6
POWER WINDOW SWITCH REMOVE/ INSTALL	8S-7
POWER WINDOW SWITCH—2-DOOR (LHD), DRIVER'S	8S-4
POWER WINDOW SWITCH—2-DOOR (RHD), DRIVER'S	8S-5
POWER WINDOW SWITCH—4-DOOR, DRIVER'S	8S-3
POWER WINDOWS; POWER WINDOWS (XJ)	8W-60-1
POWER WINDOWS; POWER WINDOWS (XJ-RHD)	8W-60-1
POWERTRAIN CONTROL MODULE	8H-1,8H-7
POWERTRAIN CONTROL MODULE (PCM); EMISSION CONTROL SYSTEMS	25-7
POWERTRAIN CONTROL MODULE (PCM); FUEL SYSTEM	14-20,14-64
POWERTRAIN CONTROL MODULE (PCM); IGNITION SYSTEMS	8D-11,8D-23,8D-5
POWERTRAIN CONTROL MODULE (PCM) 60-WAY CONNECTOR	14-40
POWER-UP AND INITIALIZATION, ABS SYSTEM	5-35
PRE-ALIGNMENT INSPECTION	2-6
PRECAUTIONS	16-10,16-8
PRECAUTIONS AND WARNINGS, SAFETY	13-10
PRECAUTIONS, BRAKE SAFETY	5-2
PRECAUTIONS, CLUTCH SAFETY	6-10
PRECAUTIONS, REFRIGERANT HOSES/TUBES	24-10
PRELIMINARY BRAKE CHECK	5-4
PRESSURE AND RETURN HOSE REPLACEMENT	19-11
PRESSURE CAP, RADIATOR	7-25
PRESSURE CHART, XJ PERFORMANCE TEMPERATURE	24-13
PRESSURE CHART, YJ PERFORMANCE TEMPERATURE	24-13
PRESSURE, ENGINE OIL	9-7
PRESSURE GAUGE, OIL; INSTRUMENT CLUSTER (XJ)	8W-40-2
PRESSURE LEAK DOWN TEST, FUEL	14-8
PRESSURE LEAKAGE TEST, CYLINDER COMBUSTION	9-6
PRESSURE LEAKAGE TEST DIAGNOSIS, CYLINDER COMBUSTION	9-7
PRESSURE (MAP) SENSOR, MANIFOLD ABSOLUTE; FUEL SYSTEM	14-63
PRESSURE (MAP) SENSOR, MANIFOLD ABSOLUTE; FUEL/IGNITION (YJ)	8W-30-4
PRESSURE (MAP) SENSOR, MANIFOLD ABSOLUTE; IGNITION SYSTEMS	8D-23,8D-5
PRESSURE (MAP) SENSOR TEST, MANIFOLD ABSOLUTE; FUEL SYSTEM	14-47
PRESSURE (MAP) SENSOR TEST, MANIFOLD ABSOLUTE; IGNITION SYSTEMS	8D-11
PRESSURE (MAP) SENSOR—PCM INPUT, MANIFOLD ABSOLUTE	14-23
PRESSURE REGULATOR, FUEL	14-33,14-61
PRESSURE RELEASE PROCEDURE, FUEL	14-6
PRESSURE RELEASE PROCEDURE, FUEL SYSTEM	14-62
PRESSURE RELIEF/ROLLOVER VALVE	25-6,25-7
PRESSURE RELIEF/ROLLOVER VALVE, FUEL TANK	14-16,14-62
PRESSURE SENSOR, MANIFOLD ABSOLUTE; FUEL/IGNITION (XJ)	8W-30-4
PRESSURE SENSOR, MANIFOLD ABSOLUTE; FUEL/IGNITION (XJ-RHD)	8W-30-4
PRESSURE SWITCH, POWER STEERING; FUEL/IGNITION (XJ)	8W-30-5
PRESSURE SWITCH, POWER STEERING; FUEL/IGNITION (YJ)	8W-30-4
PRESSURE SWITCH—2.5L ENGINE ONLY, POWER STEERING	14-63
PRESSURE SWITCH—PCM INPUT, POWER STEERING	14-24
PRESSURE TEST, AIR	21-74
PRESSURE TEST, CYLINDER COMPRESSION	9-5
PRESSURE TEST, FUEL SYSTEM	14-51,14-6
PRESSURE TEST SPECIFICATIONS, 30RH/32RH	21-336
PRESSURE WARNING LAMP, OIL; INSTRUMENT CLUSTER (XJ)	8W-40-2
PRESSURE WARNING LAMP, OIL; INSTRUMENT CLUSTER (XJ-RHD)	8W-40-1
PRESSURES, TIRE INFLATION	22-2
PRINTED CIRCUIT REMOVE/INSTALL	8E-19, 8E-40
PROBLEMS, TROUBLESHOOTING WIRING; WIRING DIAGRAMS—GENERAL INFORMATION (XJ)	8W-5
PROBLEMS, WHEEL AND TIRE	5-7
PROCEDURES—XJ, MULTI-FUNCTION SWITCH TESTING	8L-4
PROPELLER SHAFTS	16-1
PROPELLER SHAFTS AND U-JOINTS	16-15
PROTECTOR STRIP—XJ, DOOR EDGE GUARD/EDGE	23-54
PROTECTOR/NOZZLE—YJ, FUEL FILLER	23-121
PULLEY REPLACEMENT, DRIVE	19-13
PUMP CAPACITY TEST, FUEL	14-7
PUMP ELECTRICAL CONTROL, FUEL	14-5
PUMP LEAKAGE DIAGNOSIS	19-10
PUMP MODULE, FUEL; FUEL SYSTEM	14-61, 14-3
PUMP MODULE, FUEL; FUEL/IGNITION (XJ)	8W-30-2
PUMP MODULE, FUEL; FUEL/IGNITION (YJ)	8W-30-2
PUMP MODULE, FUEL; FUEL/IGNITION (XJ-RHD)	8W-30-2
PUMP MOTOR RELAY, ABS; ANTI-LOCK BRAKES (XJ)	8W-32-1
PUMP MOTOR RELAY, ABS; ANTI-LOCK BRAKES (XJ-RHD)	8W-32-1
PUMP MOTOR RELAY, ABS; ANTI-LOCK BRAKES (YJ)	8W-32-1
PUMP MOTOR SPEED SENSOR; ANTI-LOCK BRAKES (XJ)	8W-32-2
PUMP MOTOR SPEED SENSOR; ANTI-LOCK BRAKES (XJ-RHD)	8W-32-2

Description	Group-Page
PUMP MOTOR SPEED SENSOR; ANTI-LOCK BRAKES (YJ)	8W-32-1
PUMP, OIL	9-39,9-81
PUMP OPERATING SPECIFICATIONS	19-3
PUMP OVERHAUL, OIL	21-131,21-216
PUMP, POWER STEERING	19-11,19-74,19-78
PUMP RELAY, FUEL; FUEL SYSTEM	14-61
PUMP RELAY, FUEL; FUEL/IGNITION (XJ)	8W-30-2
PUMP RELAY, FUEL; FUEL/IGNITION (YJ)	8W-30-2
PUMP RELAY, FUEL; FUEL/IGNITION (XJ-RHD)	8W-30-2
PUMP RELAY TESTING, FUEL	14-47
PUMP RELAY—PCM OUTPUT, FUEL	14-27
PUMP REMOVE/INSTALL, WASHER	8K-24
PUMP REPLACEMENT	19-12
PUMP SEAL REPLACEMENT, OIL	21-199
PUMP TESTS, WATER	7-13
PUMP WEAR LIMITS, AW-4 OIL	21-338
PUMP—INITIAL OPERATION, POWER STEERING	19-15
PUMPS—GENERAL INFORMATION, WATER	7-13
PUMPS—REMOVAL/INSTALLATION, WATER	7-14
PUSH RODS, ROCKER ARMS	9-23,9-65
QUARTER AND WHEELHOUSE TRIM PANELS—XJ	23-87
QUARTER PLASTIC INSERT—XJ, REAR QUARTER WINDOW GLASS/REAR	23-73
QUARTER TRIM PANEL EXTENSION—XJ	23-87
QUARTER VENT WINDOW GLASS—XJ, REAR	23-73
QUARTER WINDOW APPLIQUE—XJ	23-25
QUARTER WINDOW GLASS—YJ, HARD TOP	23-149
QUARTER WINDOW GLASS/REAR QUARTER PLASTIC INSERT—XJ, REAR	23-73
QUICK-CONNECT FITTINGS	14-10,14-64
RACK PISTON AND WORM SHAFT REPLACEMENT	19-32
RACK—XJ, LUGGAGE	23-28
RADIATOR FAN RELAY AND MOTOR; AIR CONDITIONING/HEATER (XJ)	8W-42-2
RADIATOR FAN RELAY AND MOTOR; AIR CONDITIONING/HEATER (XJ-RHD)	8W-42-2
RADIATOR FAN RELAY—PCM OUTPUT	14-28
RADIATOR GRILLE APPLIQUE—YJ	23-104
RADIATOR PRESSURE CAP	7-25
RADIATOR SUPPORT CROSSMEMBER—XJ	23-6
RADIATORS	7-26
RADIO; AUDIO SYSTEMS	8F-2
RADIO; RADIO (XJ)	8W-47-1
RADIO; RADIO (XJ-RHD)	8W-47-1
RADIO CONNECTIONS	8F-4
RADIO DIAGNOSIS	8F-3
RADIO FREQUENCY INTERFERENCE	8F-5
RADIO ILLUMINATION; RADIO (XJ)	8W-47-1
RADIO ILLUMINATION; RADIO (XJ-RHD)	8W-47-1
RADIO ILLUMINATION; RADIO (YJ)	8W-47-1
RADIO ILLUMINATION RELAY	8F-1,8F-4
RADIO ILLUMINATION RELAY CONNECTIONS	8F-4
RADIO MEMORY; RADIO (XJ)	8W-47-1
RADIO MEMORY; RADIO (XJ-RHD)	8W-47-1
RADIO MEMORY; RADIO (YJ)	8W-47-1
RADIO NOISE SUPPRESSION	8F-2
RADIO REMOVE/INSTALL - XJ	8F-6
RADIO REMOVE/INSTALL - YJ	8F-9
RADIOS	8F-1
RAIL ASSEMBLY, FUEL	14-62
RAIL, FUEL	14-33
RAIL MOLDING—XJ, DRIP	23-25
RAMP ANGLE, GROUND CLEARANCE	0-11
RANGE LAMP, TRANSMISSION; INTERIOR LIGHTING (YJ)	8W-44-1
RANGES AND SHIFT LEVER POSITIONS, TRANSMISSION	21-166
RANGES, OPERATING	21-307
RATE, CHARGE	8A-9
RATINGS, BATTERY	8A-3
RATINGS, BATTERY CLASSIFICATIONS	8A-23
RATINGS, GENERATOR	8A-23
RATIOS, GEAR	21-2
RATIOS, TRANSMISSION GEAR	21-34
READING AND COURTESY LAMPS	8C-1
READING LAMPS; INTERIOR LIGHTING (XJ)	8W-44-2
READING LAMPS; INTERIOR LIGHTING (XJ-RHD)	8W-44-1
READING/COURTESY LAMP BULB REMOVE/INSTALL	8C-8
REAR AXLE ALIGNMENT	3-10
REAR AXLES, FRONT	0-24
REAR BENCH SEAT—YJ	23-153
REAR BUMPER	13-16,13-8
REAR CABLE REPLACEMENT (XJ), PARKING BRAKE	5-67
REAR CABLE REPLACEMENT (YJ), PARKING BRAKE	5-68
REAR CARPET/MAT—XJ	23-100
REAR CLUTCH OVERHAUL	21-138
REAR DOOR STATIONARY WINDOW GLASS—XJ	23-46
REAR DOOR WINDOW GLASS REGULATOR—XJ	23-44
REAR DOOR WINDOW GLASS—XJ	23-45
REAR LICENSE PLATE LAMPS, TAIL LAMPS; REAR LIGHTING (XJ)	8W-51-1
REAR LICENSE PLATE LAMPS, TAIL LAMPS; REAR LIGHTING (XJ-RHD)	8W-51-1
REAR MAIN OIL SEALS	9-49,9-89
REAR QUARTER VENT WINDOW GLASS—XJ	23-73
REAR QUARTER WINDOW GLASS/REAR QUARTER PLASTIC INSERT—XJ	23-73
REAR SEAT CUSHION COVER—XJ	23-82
REAR SEAT CUSHION—XJ	23-82
REAR SEATBACK COVER—XJ	23-84
REAR SEATBACK LATCH STRIKER AND BUMPER—XJ	23-84
REAR SEATBACK—XJ	23-83
REAR SHOULDER BELTS—YJ	23-154
REAR SHOULDER/LAP BELT/BUCKLE—XJ	23-91
REAR SUSPENSION COMPONENTS, XJ	3-51
REAR SUSPENSION COMPONENTS, YJ	3-51
REAR TOW HOOK	13-9
REAR WHEEL SENSOR INSTALLATION AND ADJUSTMENT	5-38
REAR WHEEL SENSOR REMOVAL	5-38
REAR WHEELHOUSE FLARES AND LINERS—XJ	23-19
REAR WINDOW GLASS GRID	8N-1,8N-2
REAR WINDOW GLASS GRID REPAIRS	8N-3
REAR WINDOW, HEATED; HEATED REAR WINDOW (XJ)	8W-48-1
REAR WINDOW, HEATED; HEATED REAR WINDOW (XJ-RHD)	8W-48-1
REAR WINDOW, HEATED; HEATED REAR WINDOW (YJ)	8W-48-1
REAR WIPER SYSTEM; WIPERS (XJ)	8W-53-1
REAR WIPER SYSTEM; WIPERS (XJ-RHD)	8W-53-1
REAR WIPER SYSTEM; WIPERS (YJ)	8W-53-1
REAR—XJ,YJ VEHICLES	16-8
REARVIEW MIRROR RETAINING BRACKET—YJ	23-144
REARVIEW MIRROR SUPPORT BRACKET REPLACEMENT—XJ, INTERIOR	23-68
REARVIEW MIRROR—XJ, INTERIOR	23-66
REARVIEW MIRROR—YJ	23-144
RECEIVE—PCM INPUT, SCI	14-24
RECEIVER, KEYLESS ENTRY	8C-1
RECEIVER TRAY LAMP—XJ, I/P ASH	23-80
RECEIVER-DRIER REPLACEMENT	24-35
RECEIVER—XJ, KEYLESS ENTRY	23-93
RECIRCULATING BALL POWER STEERING GEAR	19-21
RECIRCULATING DOOR VACUUM MOTOR REPLACEMENT, A/C	24-27
RECIRCULATING-BALL POWER STEERING GEARS	19-74
RECIRCULATION (EGR) SYSTEM, EXHAUST GAS	25-1
RECOMMENDATION, LUBRICATION AND REPLACEMENT PARTS	0-2
RECOMMENDATIONS, BRAKE BLEEDING	5-10
RECOMMENDATIONS, HOISTING	0-10
RECOMMENDATIONS, TOWING	0-10
RECOMMENDED BRAKE FLUID	5-10
RECOVERING REFRIGERANT SYSTEM	24-11
REFILLING COOLING SYSTEM	7-21
REFINISHING, BRAKE DRUM	5-58
REFINISHING, DISC BRAKE ROTOR	5-53
REFRIGERANT	24-7
REFRIGERANT EQUIPMENT	24-7
REFRIGERANT HOSES/TUBES PRECAUTIONS	24-10
REFRIGERANT, LEAK TESTING	24-11
REFRIGERANT OIL	24-12
REFRIGERANT SERVICE AND PERFORMANCE TEST	24-11
REFRIGERANT SYSTEM, CHARGING	24-11
REFRIGERANT SYSTEM, EVACUATING	24-11
REFRIGERANT SYSTEM, RECOVERING	24-11
REGULATOR, FUEL PRESSURE	14-33,14-61
REGULATOR HANDLE—YJ, FULL-METAL DOOR WINDOW GLASS	23-136
REGULATOR—XJ, FRONT DOOR WINDOW GLASS	23-42
REGULATOR—XJ, REAR DOOR WINDOW GLASS	23-44
REGULATOR—YJ, FULL-METAL DOOR WINDOW GLASS	23-138
RELAY, ABS POWER; ANTI-LOCK BRAKES (XJ)	8W-32-1
RELAY, ABS POWER; ANTI-LOCK BRAKES (XJ-RHD)	8W-32-1
RELAY, ABS POWER; ANTI-LOCK BRAKES (YJ)	8W-32-1
RELAY, ABS PUMP MOTOR; ANTI-LOCK BRAKES (XJ)	8W-32-1
RELAY, ABS PUMP MOTOR; ANTI-LOCK BRAKES (XJ-RHD)	8W-32-1
RELAY, ABS PUMP MOTOR; ANTI-LOCK BRAKES (YJ)	8W-32-1
RELAY, A/C COMPRESSOR CLUTCH	24-15,24-16
RELAY, AIR CONDITIONING (A/C) CLUTCH	14-58
RELAY AND MOTOR, RADIATOR FAN; AIR CONDITIONING/HEATER (XJ)	8W-42-2
RELAY AND MOTOR, RADIATOR FAN; AIR CONDITIONING/HEATER (XJ-RHD)	8W-42-2
RELAY, AUTOMATIC SHUT DOWN (ASD); FUEL/IGNITION (XJ)	8W-30-1
RELAY, AUTOMATIC SHUT DOWN (ASD); FUEL/IGNITION (YJ)	8W-30-1
RELAY, AUTOMATIC SHUT DOWN (ASD); FUEL/IGNITION (XJ-RHD)	8W-30-1
RELAY, AUTOMATIC SHUTDOWN (ASD); FUEL SYSTEM	14-59
RELAY, AUTOMATIC SHUTDOWN (ASD); IGNITION SYSTEMS	8D-17,8D-1
RELAY CONNECTIONS, RADIO ILLUMINATION	8F-4
RELAY CONNECTIONS, STARTER	8A-15
RELAY, DEFOGGER	8N-3
RELAY, FUEL PUMP; FUEL SYSTEM	14-61
RELAY, FUEL PUMP; FUEL/IGNITION (XJ)	8W-30-2
RELAY, FUEL PUMP; FUEL/IGNITION (YJ)	8W-30-2
RELAY, FUEL PUMP; FUEL/IGNITION (XJ-RHD)	8W-30-2
RELAY, HEADLAMP; FRONT LIGHTING (XJ-RHD)	8W-50-1
RELAY, HORN	8G-1
RELAY, LEFT TURN; TRAILER TOW (XJ)	8W-54-1
RELAY, LEFT TURN; TRAILER TOW (XJ-RHD)	8W-54-1
RELAY, LOCK; POWER DOOR LOCKS (XJ)	8W-61-1
RELAY, LOCK; POWER DOOR LOCKS (XJ-RHD)	8W-61-1
RELAY, RADIO ILLUMINATION	8F-1,8F-4
RELAY REMOVE/INSTALL, POWER LOCK/UNLOCK	8P-12
RELAY REMOVE/INSTALL, STARTER	8B-6
RELAY, RIGHT TURN; TRAILER TOW (XJ)	8W-54-1
RELAY, RIGHT TURN; TRAILER TOW (XJ-RHD)	8W-54-1
RELAY, STARTER AND STARTER	8B-4
RELAY, STOP LAMP; TRAILER TOW (XJ)	8W-54-1
RELAY, STOP LAMP; TRAILER TOW (XJ-RHD)	8W-54-1
RELAY TEST, AUTOMATIC SHUTDOWN (ASD)	8D-6
RELAY TEST, STARTER MOTOR	14-51
RELAY TEST, TORQUE CONVERTER CLUTCH	14-48

Description	Group-Page
RELAY TESTING, AUTOMATIC SHUTDOWN (ASD)	14-46
RELAY TESTING, FUEL PUMP	14-47
RELAY, TORQUE CONVERTER CLUTCH	14-65
RELAY, TORQUE CONVERTER CLUTCH (TCC) SOLENOID; FUEL/IGNITION (XJ)	8W-30-4
RELAY, TORQUE CONVERTER CLUTCH (TCC) SOLENOID; TRANSMISSION CONTROLS (YJ)	8W-31-1
RELAY, TURN SIGNAL; TURN SIGNALS (XJ-RHD)	8W-52-1
RELAY, UNLOCK; POWER DOOR LOCKS (XJ)	8W-61-1
RELAY, UNLOCK; POWER DOOR LOCKS (XJ-RHD)	8W-61-1
RELAY—2.5L ENGINE ONLY, TORQUE CONVERTER CLUTCH (TCC) SOLENOID; TRANSMISSION CONTROLS (XJ)	8W-31-1
RELAY—PCM OUTPUT, AIR CONDITIONING (A/C) CLUTCH	14-26
RELAY—PCM OUTPUT, AUTO SHUTDOWN (ASD)	14-26
RELAY—PCM OUTPUT, FUEL PUMP	14-27
RELAY—PCM OUTPUT, RADIATOR FAN	14-28
RELAY—PCM OUTPUT, TORQUE CONVERTER CLUTCH	14-29
RELAYS, POWER LOCK/UNLOCK	8P-1
RELAY/TIMER, DEFOGGER	8N-1
RELAY/TIMER REMOVE/INSTALL, DEFOGGER	8N-4
RELEASE AND LOCK HANDLE—YJ, FULL-METAL DOOR LATCH INSIDE	23-137
RELEASE AND LOCK RODS—XJ, DOOR INSIDE LATCH	23-50
RELEASE BEARING REPLACEMENT	6-11
RELEASE CABLE REPLACEMENT—XJ, LATCH	23-11
RELEASE HANDLE—YJ, FULL-METAL DOOR LATCH EXTERNAL	23-140
RELEASE HANDLE—YJ, TAILGATE LATCH	23-122
RELEASE PROCEDURE, FUEL PRESSURE	14-6
RELEASE PROCEDURE, FUEL SYSTEM PRESSURE	14-62
RELIEF/ROLLOVER VALVE, FUEL TANK PRESSURE	14-16,14-62
RELIEF/ROLLOVER VALVE, PRESSURE	25-6,25-7
REMINDER INDICATOR (SRI) LAMP, SERVICE	25-1
REMOTE GARAGE DOOR OPENER STORAGE	8C-1
REMOTE KEYLESS ENTRY MODULE; POWER DOOR LOCKS (XJ)	8W-61-1
REMOVAL, ACCELERATION SWITCH	5-39
REMOVAL AND INSTALLATION, 30RH/32RH TRANSMISSION	21-115
REMOVAL AND INSTALLATION, AW-4 TRANSMISSION	21-198
REMOVAL, BRAKE PEDAL	5-31
REMOVAL, BRAKELIGHT SWITCH	5-32
REMOVAL, CALIPER	5-48
REMOVAL, CLUTCH COVER AND DISC	6-10
REMOVAL, CLUTCH HYDRAULIC LINKAGE	6-13
REMOVAL, CLUTCH PEDAL	6-15
REMOVAL, DIFFERENTIAL; FRONT SUSPENSION AND AXLE	2-34
REMOVAL, DIFFERENTIAL; REAR SUSPENSION AND AXLES	3-18
REMOVAL, DISC BRAKESHOE	5-46
REMOVAL, DRUM BRAKESHOE	5-55
REMOVAL, FRONT WHEEL SENSOR	5-38
REMOVAL (NON-ABS), MASTER CYLINDER	5-15
REMOVAL, REAR WHEEL SENSOR	5-38
REMOVAL, ROTOR	5-51
REMOVAL, TRANSFER CASE	21-287,21-309
REMOVAL, TRANSMISSION	21-35,21-3
REMOVAL, TRANSMISSION AND CONVERTER	21-115
REMOVAL, TRANSMISSION AND TORQUE CONVERTER	21-198
REMOVAL, TRANSMISSION VALVE BODY	21-186
REMOVAL, VALVE BODY	21-104
REMOVAL, WHEEL CYLINDER	5-57
REMOVAL (WITH ABS), MASTER CYLINDER AND COMBINATION VALVE	5-17
REMOVAL (XJ), HCU	5-41
REMOVAL (XJ MODELS), ECU	5-40
REMOVAL (XJ), SHIFT LEVER	21-286,21-309
REMOVAL (XJ WITH ABS), POWER BRAKE BOOSTER	5-24
REMOVAL (XJ WITH FULL CONSOLE), PARKING BRAKE LEVER	5-63
REMOVAL (XJ WITH MINI CONSOLE), PARKING BRAKE LEVER	5-62
REMOVAL (XJ WITHOUT ABS), POWER BRAKE BOOSTER	5-29
REMOVAL (XJ WITHOUT CONSOLE), PARKING BRAKE LEVER	5-64
REMOVAL (YJ), HCU	5-44
REMOVAL (YJ), PARKING BRAKE PEDAL	5-66
REMOVAL (YJ), POWER BRAKE BOOSTER	5-30
REMOVAL (YJ), SHIFT LEVER	21-286
REMOVAL/DISASSEMBLY, PINION; FRONT SUSPENSION AND AXLE	2-36
REMOVAL/DISASSEMBLY, PINION; REAR SUSPENSION AND AXLES	3-19
REMOVAL/INSTALLATION, COMPONENT; EMISSION CONTROL SYSTEMS	25-7
REMOVAL/INSTALLATION, COMPONENT; IGNITION SYSTEMS	8D-17
REMOVAL/INSTALLATION, MULTI-PORT FUEL INJECTION (MFI)—COMPONENT	14-58
REMOVAL/INSTALLATION (YJ MODELS), ECU	5-41
REMOVAL/INSTALLATION—XJ, DOOR	23-35
REMOVE/INSTALL - XJ, ANTENNA	8F-8
REMOVE/INSTALL - XJ, MULTI-FUNCTION SWITCH	8J-5
REMOVE/INSTALL - XJ, RADIO	8F-6
REMOVE/INSTALL - XJ, SOUND BAR	8F-8
REMOVE/INSTALL - XJ, SPEAKERS	8F-6
REMOVE/INSTALL - YJ, ANTENNA	8F-10
REMOVE/INSTALL - YJ, RADIO	8F-9
REMOVE/INSTALL - YJ, SOUND BAR	8F-10
REMOVE/INSTALL - YJ, SPEAKERS	8F-9
REMOVE/INSTALL - YJ, TURN SIGNAL/HAZARD WARNING SWITCH	8J-5
REMOVE/INSTALL, AIRBAG MODULE	8M-3
REMOVE/INSTALL, BATTERY	8B-1
REMOVE/INSTALL, CLUSTER ASSEMBLY	8E-17, 8E-35
REMOVE/INSTALL, DEFOGGER RELAY/TIMER	8N-4
REMOVE/INSTALL, DEFOGGER SWITCH	8N-4
REMOVE/INSTALL, GAUGES	8E-17,8-E39
REMOVE/INSTALL, HEADLAMP OR PANEL DIMMER SWITCH	8E-42
REMOVE/INSTALL, HEADLAMP SWITCH	8E-19
REMOVE/INSTALL, HORN	8G-3
REMOVE/INSTALL, HORN SWITCH	8G-3
REMOVE/INSTALL, INSTRUMENT PANEL	8E-20
REMOVE/INSTALL, KEYLESS ENTRY MODULE	8P-10
REMOVE/INSTALL, LIFTGATE WASHER NOZZLE	8K-24
REMOVE/INSTALL, LIFTGATE WIPER ARM	8K-17
REMOVE/INSTALL, LIFTGATE WIPER MOTOR	8K-20,8K-6
REMOVE/INSTALL, LIFTGATE WIPER/ WASHER SWITCH	8K-24,8K-8
REMOVE/INSTALL, OVERHEAD CONSOLE	8C-6
REMOVE/INSTALL, POWER LOCK MOTOR	8P-8
REMOVE/INSTALL, POWER LOCK SWITCH	8P-8
REMOVE/INSTALL, POWER LOCK/ UNLOCK RELAY	8P-12
REMOVE/INSTALL, POWER MIRROR	8T-4
REMOVE/INSTALL, POWER MIRROR SWITCH	8T-4
REMOVE/INSTALL, POWER SEAT ADJUSTER/MOTORS	8R-3
REMOVE/INSTALL, POWER SEAT SWITCH	8R-3
REMOVE/INSTALL, POWER WINDOW MOTOR	8S-7
REMOVE/INSTALL, POWER WINDOW SWITCH	8S-7
REMOVE/INSTALL, PRINTED CIRCUIT	8E-19, 8E-40
REMOVE/INSTALL, READING/COURTESY LAMP BULB	8C-8
REMOVE/INSTALL, SERVO CABLE	8H-10
REMOVE/INSTALL, SPEED CONTROL SERVO	8H-9
REMOVE/INSTALL, SPEED CONTROL SWITCH	8H-9
REMOVE/INSTALL, STARTER RELAY	8B-6
REMOVE/INSTALL, SUNGLASSES STORAGE BIN	8C-7
REMOVE/INSTALL, VACUUM RESERVOIR	8H-10
REMOVE/INSTALL, WASHER PUMP	8K-24
REMOVE/INSTALL, WASHER PUMP/ RESERVOIR	8K-8
REMOVE/INSTALL, WINDSHIELD WIPER ARM	8K-17
REMOVE/INSTALL, WINDSHIELD WIPER BLADE	8K-17
REMOVE/INSTALL, WINDSHIELD WIPER LINKAGE AND PIVOTS	8K-17
REMOVE/INSTALL, WINDSHIELD WIPER MOTOR	8K-19,8K-6
REMOVE/INSTALL, WINDSHIELD WIPER/WASHER SWITCH	8K-20,8K-7
REMOVE/INSTALL—2.5L, STARTER	8B-4
REMOVE/INSTALL—4.0L, STARTER	8B-5
REMOVE/INSTALL—LEFT-HAND DRIVE, GENERATOR	8B-6
REMOVE/INSTALL—RIGHT-HAND DRIVE, GENERATOR	8B-7
REMOVE—INSTALL, AIRBAG MODULE	19-49
REPAIR DAMAGED OR WORN THREADS	9-4
REPAIR PRODUCTS—XJ, AFTERMARKET PAINT AND TRIM	23-159
REPAIR PRODUCTS—YJ, AFTERMARKET PAINT AND TRIM	23-160
REPAIR, WIRING; WIRING DIAGRAMS—GENERAL INFORMATION (XJ)	8W-6
REPAIRING LEAKS	22-3
REPAIR—MOLEX CONNECTORS, TERMINAL/CONNECTOR; WIRING DIAGRAMS—GENERAL INFORMATION (XJ)	8W-6
REPAIR—XJ, STATIONARY GLASS WATER LEAK DETECTION	23-76
REPAIR—YJ, HARD TOP	23-127
REPAIR—YJ, STATIONARY GLASS WATER LEAK DETECTION	23-150
REPAIRS, FRAME	13-13
REPAIRS, REAR WINDOW GLASS GRID; REAR WINDOW DEFOGGER	8N-3
REPLACE—CYLINDER HEAD NOT REMOVED, VALVE COMPONENT	9-23,9-65
REPLACEMENT—XJ, BACK-UP/REAR TURN SIGNAL/TAIL LAMP BULB	8L-12
REPLACEMENT—XJ, DOME LAMP	8L-17
REPLACEMENT—XJ, DOOR HINGE/ HINGE PIN	23-52
REPLACEMENT—XJ, DOOR RESTRAINT	23-41
REPLACEMENT—XJ, DRL MODULE	8L-15
REPLACEMENT—XJ, FOG LAMP	8L-9
REPLACEMENT—XJ, FOG LAMP SWITCH	8L-10
REPLACEMENT—XJ, FRONT PARK/TURN SIGNAL LAMP BULB	8L-9
REPLACEMENT—XJ, HEADLAMP BULB	8L-7
REPLACEMENT—XJ, HEADLAMP DELAY MODULE	8L-14
REPLACEMENT—XJ, HOOD HINGE	23-10
REPLACEMENT—XJ, HOOD LATCH	23-11
REPLACEMENT—XJ, HOOD LATCH STRIKER	23-11
REPLACEMENT—XJ, INTERIOR REARVIEW MIRROR SUPPORT BRACKET	23-68
REPLACEMENT—XJ, LATCH RELEASE CABLE	23-11
REPLACEMENT—XJ, LIFTGATE SUPPORT ROD BALL STUD	23-63
REPLACEMENT—XJ, SAFETY LATCH STRIKER	23-11
REPLACEMENT—XJ, SIDE MARKER LAMP BULB	8L-10
REPLACEMENT—XJ, UNDERHOOD LAMP	8L-13
REPLACEMENT—XJ, UNDERHOOD LAMP BULB	8L-13
REPLACEMENT—XJ VEHICLES, DRIVE AXLE ASSEMBLY; FRONT SUSPENSION AND AXLE	2-23

Description	Group-Page
REPLACEMENT—XJ VEHICLES, DRIVE AXLE ASSEMBLY; REAR SUSPENSION AND AXLES	3-14,3-31
REPLACEMENT—XJ, WINDSHIELD GLASS	23-69
REPLACEMENT—YJ, BACK-UP/REAR TURN SIGNAL/TAIL LAMP BULB	8L-28
REPLACEMENT—YJ, DOOR FRAME GLASS CHANNEL	23-142
REPLACEMENT—YJ, DOOR WEATHERSTRIP SEAL	23-142
REPLACEMENT—YJ, DRL MODULE	8L-30
REPLACEMENT—YJ, FOG LAMP	8L-25
REPLACEMENT—YJ, FOG LAMP SWITCH	8L-26
REPLACEMENT—YJ, FRONT PARK/TURN SIGNAL LAMP BULB	8L-25
REPLACEMENT—YJ, HEADLAMP BULB	8L-23
REPLACEMENT—YJ, HEADLAMP DIMMER SWITCH	8L-26
REPLACEMENT—YJ, LIFTGATE GLASS WEATHERSTRIP SEAL	23-125
REPLACEMENT—YJ, SIDE MARKER LAMP BULB	8L-25
REPLACEMENT—YJ, UNDERHOOD LAMP	8L-29
REPLACEMENT—YJ, UNDERHOOD LAMP BULB	8L-29
REPLACEMENT—YJ VEHICLES, DRIVE AXLE ASSEMBLY; FRONT SUSPENSION AND AXLE	2-24
REPLACEMENT—YJ VEHICLES, DRIVE AXLE ASSEMBLY; REAR SUSPENSION AND AXLES	3-14
REPLACEMENT—YJ VEHICLES, HARDTOP DOME/CARGO LAMP BULB	8L-31
REQUIREMENTS, FUEL	0-1
REQUIRING NO LUBRICATION, COMPONENTS	0-2
RESERVE/OVERFLOW SYSTEM, COOLANT	7-24
RESERVOIR REPLACEMENT (2-PIECE MASTER CYLINDER)	5-19
RESERVOIR, VACUUM	8H-1
RESISTANCE, IGNITION COIL	8D-9
RESISTANCE (OHMS)—COOLANT TEMPERATURE SENSOR/MANIFOLD AIR TEMPERATURE, SENSOR	14-46
RESISTANCE, SPARK PLUG CABLE	8D-14
RESISTORS REPLACEMENT, BLOWER MOTOR	24-31
RESTRAINT REPLACEMENT—XJ, DOOR	23-41
RETAINER AND PISTON SPECIFICATIONS, AW-4	21-340
RETAINING BRACKET—YJ, REARVIEW MIRROR	23-144
RETURN—PCM INPUT, SENSOR	14-25
REVEAL MOLDING—XJ, WINDSHIELD	23-66
REVEAL MOLDING—YJ, WINDSHIELD	23-144
RHD, STEERING	19-74
RIGHT HAND DRIVE, AUTOMATIC BELT TENSIONER—XJ MODELS WITH	7-42
RIGHT HAND DRIVE, BELT SERVICE—EXCEPT	7-40
RIGHT HAND DRIVE, BELT SERVICE—XJ MODELS WITH	7-42
RIGHT HAND DRIVE (RHD), BELT TENSION—EXCEPT	7-38
RIGHT HAND DRIVE (RHD) MODELS, BELT TENSION—EXCEPT	7-45
RIGHT HAND DRIVE VEHICLES	23-1
RIGHT TURN RELAY; TRAILER TOW (XJ)	8W-54-1
RIGHT TURN RELAY; TRAILER TOW (XJ-RHD)	8W-54-1
RING CHART—AX 15 MANUAL TRANSMISSION, SELECTIVE SNAP	21-334
RING/THRUST WASHER/THRUST PLATE SPECIFICATIONS, 30RH/32RH SNAP	21-335
ROCKER ARMS AND PUSH RODS	9-23,9-65
ROD AND PAWL SERVICE, PARK	21-190
ROD BALL STUD REPLACEMENT—XJ, LIFTGATE SUPPORT	23-63
ROD BEARING FITTING CHART, CONNECTING	9-41,9-83
ROD CYLINDER DISPOSAL—XJ, LIFTGATE SUPPORT	23-63
ROD CYLINDER—XJ, LIFTGATE SUPPORT	23-62
ROD, TIE	19-16,19-19
RODS, PISTONS AND CONNECTING	9-39,9-81
RODS, ROCKER ARMS AND PUSH	9-23,9-65
RODS—XJ, DOOR INSIDE LATCH RELEASE AND LOCK	23-50
ROOF VENT—YJ, HARD TOP	23-127
ROTOR, DISTRIBUTOR	8D-8
ROTOR, IGNITION CABLES, DISTRIBUTOR CAP	0-20
ROTOR INSTALLATION	5-51
ROTOR REFINISHING, DISC BRAKE	5-53
ROTOR REMOVAL	5-51
ROTOR RUNOUT, DISC BRAKE	5-52
ROTOR THICKNESS, DISC BRAKE	5-52
ROTOR—SPEEDOMETER DRIVE GEAR, SPEED SENSOR	21-193
ROUGH AND/OR HAS A MISS, INJECTOR DIAGNOSIS—VEHICLE RUNS	14-52
ROUTING SCHEMATIC—2.5L 4 CYLINDER ENGINE, VACUUM	25-3
ROUTING SCHEMATIC—4.0L 6 CYLINDER ENGINE, VACUUM	25-3
ROUTING SCHEMATICS, VACUUM HOSE	25-2
ROUTING, SYSTEM COOLANT	7-1
RUBBER AND PLASTIC COMPONENT INSPECTION	0-20
RUBBER AND PLASTIC HOSES/TUBING	0-26
RUNNING LAMP (DRL) MODULE, DAYTIME	8W-50-2
RUNNING LAMP (DRL) MODULE—CANADIAN VEHICLES ONLY, DAYTIME	8W-50-2
RUNNING LIGHTS (CANADA ONLY)—XJ, DAYTIME	8L-15
RUNNING LIGHTS (CANADA ONLY)—YJ, DAYTIME	8L-30
RUNOUT	16-4
RUNOUT, CLUTCH COVER AND DISC	6-3
RUNOUT, DISC BRAKE ROTOR	5-52
RUNOUT, FLYWHEEL	6-3
RUNOUT SPECIFICATIONS	16-4
RUNOUT, TIRE AND WHEEL	22-8
RUNS ROUGH AND/OR HAS A MISS, INJECTOR DIAGNOSIS—VEHICLE	14-52
SAFETY CERTIFICATION LABEL, VEHICLE	Intro.-4
SAFETY LATCH STRIKER REPLACEMENT—XJ	23-11
SAFETY LATCH—YJ, HOOD	23-109
SAFETY PRECAUTIONS AND WARNINGS	13-10
SAFETY PRECAUTIONS, BRAKE	5-2
SAFETY PRECAUTIONS, CLUTCH	6-10
SANDING,BUFFING AND POLISHING, WET	23-158
SCAN TOOL, DRB; BRAKES	5-3
SCAN TOOL, DRB; COOLING SYSTEM	7-5
SCAN TOOL, DRB; EMISSION CONTROL SYSTEMS	25-2
SCAN TOOL, DRB; FUEL SYSTEM	14-54
SCAN TOOL, DRB; IGNITION SYSTEMS	8D-8
SCHEDULES, MAINTENANCE	0-4
SCHEMATIC - YJ, BUZZER MODULE	8U-4
SCHEMATIC—2.5L 4 CYLINDER ENGINE, VACUUM ROUTING	25-3
SCHEMATIC—4.0L 6 CYLINDER ENGINE, VACUUM ROUTING	25-3
SCHEMATIC—XJ, AIR CONDITIONING	24-5
SCHEMATIC—XJ, HEATING	24-2
SCHEMATICS, BELT	7-38
SCHEMATICS, PCM SYSTEM	14-41
SCHEMATICS, VACUUM HOSE ROUTING	25-2
SCI RECEIVE—PCM INPUT	14-24
SCI TRANSMIT—PCM OUTPUT	14-29
SCREEN—XJ, COWL GRILLE	23-12
SCREEN—XJ, HEADLAMP/FOG LAMP ADJUSTMENT USING ALIGNMENT	8L-7
SCREEN—YJ, COWL GRILLE	23-109
SCREEN—YJ, HEADLAMP/FOG LAMP ADJUSTMENT USING ALIGNMENT	8L-23
SCREW ANCHOR AND BUMPER—XJ, LIFTGATE LICENSE PLATE	23-65
SCUFF PLATE/COWL SIDE TRIM PANEL—XJ, FRONT INNER	23-86
SCUFF PLATES—XJ, INTERIOR TRIM PANELS	23-84
SCUFF PLATES—XJ, OUTER	23-89
SEAL AND BEARING, AXLE SHAFT	3-17
SEAL AND BEARING SERVICE, AXLE SHAFT	3-32
SEAL AND SPRING REPLACEMENT, VALVE STEM	9-65
SEAL REPLACEMENT, INNER AXLE SHAFT OIL	2-35
SEAL REPLACEMENT, MANUAL VALVE SHAFT	21-187
SEAL REPLACEMENT, OIL PUMP	21-199
SEAL REPLACEMENT, PINION; FRONT SUSPENSION AND AXLE	2-25
SEAL REPLACEMENT, PINION; REAR SUSPENSION AND AXLES	3-33
SEAL REPLACEMENT, PINION SHAFT	3-15
SEAL REPLACEMENT, PITMAN SHAFT	19-37
SEAL REPLACEMENT, TIMING CASE COVER OIL	9-30,9-73
SEAL REPLACEMENT—YJ, DOOR WEATHERSTRIP	23-142
SEAL REPLACEMENT—YJ, LIFTGATE GLASS WEATHERSTRIP	23-125
SEAL/CROSSMEMBER AIR DEFLECTOR—XJ, COWL WEATHERSTRIP	23-11
SEAL—DRIVE PLATE SERVICE, CONVERTER—PUMP	21-116
SEAL—XJ, LIFTGATE OPENING WEATHERSTRIP	23-64
SEAL—YJ, BELTLINE	23-142
SEAL—YJ, COWL WEATHERSTRIP	23-109
SEAL—YJ, TAILGATE WEATHERSTRIP	23-123
SEAL—YJ, WINDSHIELD FRAME WEATHERSTRIP	23-146
SEALS AND BEARING REPLACEMENT, PITMAN SHAFT	19-34
SEALS, REAR MAIN OIL	9-49,9-89
SEALS, VALVE SPRINGS AND OIL	9-23
SEALS—IN CAR REPLACEMENT, PITMAN SHAFT	19-23
SEALS—XJ, DOOR WINDOW GLASS AND DOOR OPENING WEATHERSTRIP	23-55
SEALS—YJ, FULL-METAL DOOR WEATHERSTRIP	23-141
SEAT ADJUSTER/MOTORS, POWER	8R-1,8R-2
SEAT ADJUSTER/MOTORS REMOVE/INSTALL, POWER	8R-3
SEAT BELT INDICATOR WARNING LAMP; INSTRUMENT CLUSTER (XJ)	8W-40-2
SEAT BELT INDICATOR WARNING LAMP; INSTRUMENT CLUSTER (XJ-RHD)	8W-40-2
SEAT BELT SWITCH, DRIVER'S	8U-1,8U-3
SEAT CUSHION AND COVER—XJ, BUCKET	23-81
SEAT CUSHION COVER—XJ, REAR	23-82
SEAT CUSHION—XJ, REAR	23-82
SEAT PLATFORM—XJ, BUCKET	23-82
SEAT, POWER; POWER SEAT (XJ)	8W-63-1
SEAT, POWER; POWER SEAT (XJ-RHD)	8W-63-1
SEAT SWITCH CONTINUITY, POWER	8R-2
SEAT SWITCH, POWER	8R-1,8R-2
SEAT SWITCH REMOVE/INSTALL, POWER	8R-3
SEATBACK COVER AND FRAME—XJ, BUCKET	23-81
SEATBACK COVER—XJ, REAR	23-84
SEATBACK LATCH STRIKER AND BUMPER—XJ, REAR	23-84
SEATBACK—XJ, REAR	23-83
SEAT—YJ, REAR BENCH	23-153
SEATS—XJ, FRONT BUCKET	23-81
SEATS—YJ	23-153
SEATS—YJ, BUCKET	23-153
SECOND (2) RANGE, HYDRAULIC FLOW IN MANUAL	21-96
SECOND BRAKE OVERHAUL	21-241
SECONDARY CABLES, SPARK PLUG	8D-14, 8D-24
SECONDARY CIRCUIT DIAGNOSIS, IGNITION	8D-10
SECTION IDENTIFICATION; WIRING DIAGRAMS (XJ)	8W-1
SECTION IDENTIFICATION; WIRING DIAGRAMS (XJ-RHD)	8W-1
SECTION IDENTIFICATION; WIRING DIAGRAMS (YJ)	8W-1
SELECTIVE SNAP RING CHART—AX 15 MANUAL TRANSMISSION	21-334
SELF-DIAGNOSTIC TEST, COMPASS/DISPLAY	8C-2
SENDING UNIT, FUEL GAUGE	14-16
SENSE—PCM INPUT, AUTOMATIC SHUTDOWN (ASD)	14-21

Description	Group-Page
SENSE—PCM INPUT, IGNITION CIRCUIT	14-23
SENSING CYCLING CLUTCH SWITCH, FIN	24-15,24-31
SENSITIVE DEVICES, ELECTROSTATIC DISCHARGE (ESD)	8W-2
SENSOR AIR GAP, SPEED	5-37
SENSOR, BRAKE PEDAL TRAVEL; ANTI-LOCK BRAKES (YJ)	8W-32-1
SENSOR, CAMSHAFT POSITION; FUEL SYSTEM	14-60
SENSOR, CAMSHAFT POSITION; FUEL/IGNITION (XJ)	8W-30-3
SENSOR, CAMSHAFT POSITION; FUEL/IGNITION (YJ)	8W-30-3
SENSOR, CAMSHAFT POSITION; IGNITION SYSTEMS	8D-17,8D-2
SENSOR, CAMSHAFT POSITION; FUEL/IGNITION (XJ-RHD)	8W-30-3
SENSOR, COOLANT TEMPERATURE	25-7
SENSOR, CRANKSHAFT POSITION; FUEL SYSTEM	14-60
SENSOR, CRANKSHAFT POSITION; FUEL/IGNITION (XJ)	8W-30-3
SENSOR, CRANKSHAFT POSITION; FUEL/IGNITION (YJ)	8W-30-3
SENSOR, CRANKSHAFT POSITION; IGNITION SYSTEMS	8D-17,8D-3
SENSOR, CRANKSHAFT POSITION; FUEL/IGNITION (XJ-RHD)	8W-30-3
SENSOR, ENGINE COOLANT TEMPERATURE; FUEL SYSTEM	14-60
SENSOR, ENGINE COOLANT TEMPERATURE; FUEL/IGNITION (XJ)	8W-30-3
SENSOR, ENGINE COOLANT TEMPERATURE; FUEL/IGNITION (YJ)	8W-30-3
SENSOR, ENGINE COOLANT TEMPERATURE; IGNITION SYSTEMS	8D-19,8D-5
SENSOR, ENGINE COOLANT TEMPERATURE; FUEL/IGNITION (XJ-RHD)	8W-30-3
SENSOR, HEATED OXYGEN; FUEL/IGNITION (XJ)	8W-30-3
SENSOR, HEATED OXYGEN; FUEL/IGNITION (YJ)	8W-30-3
SENSOR, HEATED OXYGEN; FUEL/IGNITION (XJ-RHD)	8W-30-3
SENSOR INSTALLATION AND ADJUSTMENT, REAR WHEEL	5-38
SENSOR INSTALLATION, FRONT WHEEL	5-38
SENSOR, INTAKE AIR TEMPERATURE; FUEL/IGNITION (XJ)	8W-30-4
SENSOR, INTAKE AIR TEMPERATURE; FUEL/IGNITION (YJ)	8W-30-4
SENSOR, INTAKE AIR TEMPERATURE; FUEL/IGNITION (XJ-RHD)	8W-30-4
SENSOR, INTAKE MANIFOLD AIR TEMPERATURE; FUEL SYSTEM	14-60
SENSOR, INTAKE MANIFOLD AIR TEMPERATURE; IGNITION SYSTEMS	8D-23,8D-5
SENSOR, MANIFOLD ABSOLUTE PRESSURE; FUEL/IGNITION (XJ)	8W-30-4
SENSOR, MANIFOLD ABSOLUTE PRESSURE; FUEL/IGNITION (XJ-RHD)	8W-30-4
SENSOR, MANIFOLD ABSOLUTE PRESSURE (MAP); FUEL SYSTEM	14-63
SENSOR, MANIFOLD ABSOLUTE PRESSURE (MAP); FUEL/IGNITION (YJ)	8W-30-4
SENSOR, MANIFOLD ABSOLUTE PRESSURE (MAP); IGNITION SYSTEMS	8D-23, 8D-5
SENSOR (O2S) HEATING ELEMENT TEST, OXYGEN	14-48
SENSOR OPERATION, WHEEL SPEED	5-37
SENSOR, OXYGEN (O2S); EMISSION CONTROL SYSTEMS	25-6,25-7
SENSOR, OXYGEN (O2S); FUEL SYSTEM	14-63
SENSOR, OXYGEN (O2S); IGNITION SYSTEMS	8D-23,8D-5
SENSOR, PUMP MOTOR SPEED; ANTI-LOCK BRAKES (XJ)	8W-32-2
SENSOR, PUMP MOTOR SPEED; ANTI-LOCK BRAKES (XJ-RHD)	8W-32-2
SENSOR, PUMP MOTOR SPEED; ANTI-LOCK BRAKES (YJ)	8W-32-1
SENSOR REMOVAL, FRONT WHEEL	5-38
SENSOR REMOVAL, REAR WHEEL	5-38
SENSOR RESISTANCE (OHMS)—COOLANT TEMPERATURE SENSOR/MANIFOLD AIR TEMPERATURE	14-46
SENSOR RETURN—PCM INPUT	14-25
SENSOR ROTOR—SPEEDOMETER DRIVE GEAR, SPEED	21-193
SENSOR, SPEED	21-192
SENSOR TEST, CAMSHAFT POSITION; FUEL SYSTEM	14-46
SENSOR TEST, CAMSHAFT POSITION; IGNITION SYSTEMS	8D-6
SENSOR TEST, CRANKSHAFT POSITION; FUEL SYSTEM	14-47
SENSOR TEST, CRANKSHAFT POSITION; IGNITION SYSTEMS	8D-7
SENSOR TEST, ENGINE COOLANT TEMPERATURE; FUEL SYSTEM	14-46
SENSOR TEST, ENGINE COOLANT TEMPERATURE; IGNITION SYSTEMS	8D-9
SENSOR TEST, INTAKE MANIFOLD AIR TEMPERATURE; FUEL SYSTEM	14-46
SENSOR TEST, INTAKE MANIFOLD AIR TEMPERATURE; IGNITION SYSTEMS	8D-11
SENSOR TEST, MANIFOLD ABSOLUTE PRESSURE (MAP); FUEL SYSTEM	14-47
SENSOR TEST, MANIFOLD ABSOLUTE PRESSURE (MAP); IGNITION SYSTEMS	8D-11
SENSOR TEST, THROTTLE POSITION	8D-15
SENSOR TEST, VEHICLE SPEED	14-48
SENSOR TESTS, OXYGEN (O2S)	8D-15
SENSOR, THROTTLE POSITION; FUEL/IGNITION (XJ)	8W-30-4
SENSOR, THROTTLE POSITION; FUEL/IGNITION (YJ)	8W-30-4
SENSOR, THROTTLE POSITION; IGNITION SYSTEMS	8D-5
SENSOR, THROTTLE POSITION; FUEL/IGNITION (XJ-RHD)	8W-30-4
SENSOR (TPS) SERVICE, THROTTLE POSITION	21-193
SENSOR (TPS) TEST, THROTTLE POSITION	14-48
SENSOR (TPS), THROTTLE POSITION; FUEL SYSTEM	14-65
SENSOR (TPS), THROTTLE POSITION; IGNITION SYSTEMS	8D-25
SENSOR (TPS)—PCM INPUT, THROTTLE POSITION	14-25
SENSOR, VEHICLE SPEED; FUEL SYSTEM	14-66
SENSOR, VEHICLE SPEED; FUEL/IGNITION (XJ)	8W-30-2
SENSOR, VEHICLE SPEED; FUEL/IGNITION (YJ)	8W-30-3
SENSOR, VEHICLE SPEED; VEHICLE SPEED CONTROL SYSTEM	8H-1,8H-5
SENSOR, VEHICLE SPEED; FUEL/IGNITION (XJ-RHD)	8W-30-2
SENSOR/INFLATOR ASSEMBLY, IMPACT	8M-2
SENSOR/MANIFOLD AIR TEMPERATURE, SENSOR RESISTANCE (OHMS)—COOLANT TEMPERATURE	14-46
SENSOR—PCM INPUT, CAMSHAFT POSITION	14-22
SENSOR—PCM INPUT, CRANKSHAFT POSITION	14-22
SENSOR—PCM INPUT, ENGINE COOLANT TEMPERATURE	14-23
SENSOR—PCM INPUT, INTAKE MANIFOLD AIR TEMPERATURE	14-22
SENSOR—PCM INPUT, MANIFOLD ABSOLUTE PRESSURE (MAP)	14-23
SENSOR—PCM INPUT, OXYGEN (O2S)	14-24
SENSOR—PCM INPUT, VEHICLE SPEED	14-25
SENSORS, WHEEL SPEED; ANTI-LOCK BRAKES (XJ)	8W-32-1
SENSORS, WHEEL SPEED; ANTI-LOCK BRAKES (XJ-RHD)	8W-32-1
SENSORS, WHEEL SPEED; ANTI-LOCK BRAKES (YJ)	8W-32-1
SENSORS, WHEEL SPEED; BRAKES	5-34
SENTINEL HEADLAMP DELAY MODULE—XJ	8L-14
SERPENTINE DRIVE BELT DIAGNOSIS	7-39
SERVICEABILITY, ABS COMPONENT	5-37
SERVICE—EXCEPT RIGHT HAND DRIVE, BELT	7-40
SERVICE—XJ MODELS WITH RIGHT HAND DRIVE, BELT	7-42
SERVICE—XJ, STEERING COLUMN GENERAL	19-47
SERVICE—XJ VEHICLES, COMPONENT	24-23
SERVICE—YJ, FULL-METAL DOOR	23-142
SERVICE—YJ, SOFT TOP	23-129
SERVICE—YJ VEHICLES, COMPONENT	24-32
SERVO CABLE	8H-1
SERVO CABLE REMOVE/INSTALL	8H-10
SERVO REMOVE/INSTALL, SPEED CONTROL	8H-9
SERVO, SPEED CONTROL	8H-1,8H-6
SET, MANIFOLD GAUGE	24-7
SHAFT AND SIDE COVER REPLACEMENT, PITMAN	19-28
SHAFT, AXLE	3-16
SHAFT, HUB BEARING AND AXLE	2-25
SHAFT, INTERMEDIATE (COUPLER)	19-45
SHAFT, INTERMEDIATE—COUPLING	19-23
SHAFT OIL SEAL REPLACEMENT, INNER AXLE	2-35
SHAFT REPLACEMENT, RACK PISTON AND WORM	19-32
SHAFT SEAL AND BEARING, AXLE	3-17
SHAFT, SEAL AND BEARING SERVICE, AXLE	3-32
SHAFT SEAL REPLACEMENT, MANUAL VALVE	21-187
SHAFT SEAL REPLACEMENT, PINION	3-15
SHAFT SEAL REPLACEMENT, PITMAN	19-37
SHAFT SEALS AND BEARING REPLACEMENT, PITMAN	19-34
SHAFT SEALS—IN CAR REPLACEMENT, PITMAN	19-23
SHAFTS AND U-JOINTS, PROPELLER	16-15
SHAFTS, DRIVE	0-26
SHAFTS, PROPELLER	16-1
SHIELD, GENERATOR SPLASH	13-13
SHIELD—XJ VEHICLES, FUEL FILLER HOSE SPLASH	13-4
SHIELDS, EXHAUST HEAT	11-1
SHIELDS, HEAT	14-13
SHIELDS—YJ, FENDER INNER SPLASH	23-116
SHIFT CABLE ADJUSTMENT	21-195
SHIFT CABLE ADJUSTMENT (XJ)	21-100
SHIFT, DISASSEMBLY—COLUMN OR CONSOLE	19-60
SHIFT INDICATOR—PCM OUTPUT	14-29
SHIFT LEVER INSTALLATION (XJ)	21-286,21-309
SHIFT LEVER INSTALLATION (YJ)	21-286
SHIFT LEVER POSITIONS, TRANSMISSION RANGES	21-166
SHIFT LEVER REMOVAL (XJ)	21-286,21-309
SHIFT LEVER REMOVAL (YJ)	21-286
SHIFT LINKAGE ADJUSTMENT	21-286,21-309
SHIFT LINKAGE ADJUSTMENT (YJ)	21-100
SHIFT MECHANISM	21-307
SHIFT PATTERN	21-2
SHIFT PATTERN, TRANSMISSION	21-34
SHIFTER/IGNITION INTERLOCK MECHANISM, AUTOMATIC TRANSMISSION	19-55
SHIFTING TEST, MANUAL	21-177
SHIFT—XJ, MINI-CONSOLE WITH FLOOR	23-94
SHIM PACK MEASUREMENT AND ADJUSTMENT, DIFFERENTIAL	2-43
SHOCK ABSORBER; FRONT SUSPENSION AND AXLE	2-13,2-16
SHOCK ABSORBER; REAR SUSPENSION AND AXLES	3-4,3-7
SHOCK ABSORBER DIAGNOSIS, SPRING	3-3,3-6
SHOCK DIAGNOSIS, SPRING; FRONT SUSPENSION AND AXLE	2-13,2-15
SHOCK DIAGNOSIS, SPRING; REAR SUSPENSION AND AXLES	3-3,3-6
SHOULDER BELT/BUCKLE—XJ, FRONT	23-90
SHOULDER BELTS—YJ, FRONT	23-154
SHOULDER BELTS—YJ, REAR	23-154
SHOULDER/LAP BELT/BUCKLE—XJ, REAR	23-91
SHUT DOWN (ASD) RELAY, AUTOMATIC; FUEL/IGNITION (XJ)	8W-30-1
SHUT DOWN (ASD) RELAY, AUTOMATIC; FUEL/IGNITION (YJ)	8W-30-1
SHUT DOWN (ASD) RELAY, AUTOMATIC; FUEL/IGNITION (XJ-RHD)	8W-30-1

Description	Group-Page
SHUTDOWN (ASD) RELAY, AUTOMATIC; FUEL SYSTEM	14-59
SHUTDOWN (ASD) RELAY, AUTOMATIC; IGNITION SYSTEMS	8D-17,8D-1
SHUTDOWN (ASD) RELAY TEST, AUTOMATIC	8D-6
SHUTDOWN (ASD) RELAY TESTING, AUTOMATIC	14-46
SHUTDOWN (ASD) RELAY—PCM OUTPUT, AUTO	14-26
SHUTDOWN (ASD) SENSE—PCM INPUT, AUTOMATIC	14-21
SIDE COVER REPLACEMENT, PITMAN SHAFT	19-28
SIDE MARKER LAMP BULB REPLACEMENT—XJ	8L-10
SIDE MARKER LAMP BULB REPLACEMENT—YJ	8L-25
SIDE MOLDING/CLADDING—XJ, BODY	23-20
SIDE MOLDING—XJ, WINDSHIELD	23-86
SIDE STEP MOLDING—YJ, BODY	23-115
SIDE TRIM PANEL—XJ, FRONT INNER SCUFF PLATE/COWL	23-86
SIGNAL INDICATOR LAMPS, TURN; INSTRUMENT CLUSTER (XJ)	8W-40-2
SIGNAL INDICATOR LAMPS, TURN; INSTRUMENT CLUSTER (XJ-RHD)	8W-40-2
SIGNAL LAMP BULB REPLACEMENT—XJ, FRONT PARK/TURN	8L-9
SIGNAL LAMP BULB REPLACEMENT—YJ, FRONT PARK/TURN	8L-25
SIGNAL RELAY, TURN; TURN SIGNALS (XJ-RHD)	8W-52-1
SIGNAL SYSTEM - YJ, TURN	8J-3
SIGNAL SYSTEM, TURN	8J-1
SIGNAL, TACHOMETER; FUEL/IGNITION (XJ)	8W-30-5
SIGNAL, TACHOMETER; FUEL/IGNITION (YJ)	8W-30-5
SIGNAL, TACHOMETER; FUEL/IGNITION (XJ-RHD)	8W-30-4
SIGNAL/HAZARD WARNING SWITCH REMOVE/INSTALL - YJ, TURN	8J-5
SIGNAL/HAZARD WARNING SYSTEM - XJ, TURN	8J-3
SIGNALS, TURN; TURN SIGNALS (YJ)	8W-52-1
SIGNALS, WHEEL/TIRE SIZE AND INPUT	5-3
SIGNAL/TAIL LAMP BULB REPLACEMENT—XJ, BACK-UP/REAR TURN	8L-12
SIGNAL/TAIL LAMP BULB REPLACEMENT—YJ, BACK-UP/REAR TURN	8L-28
SINGLE CARDAN	16-10
SIZE AND INPUT SIGNALS, WHEEL/TIRE	5-3
SKID PLATE, FRONT	13-1
SKID PLATE, FUEL TANK	13-15,13-3
SKID PLATE, TRANSFER CASE	13-15,13-3
SLIP DIFFERENTIAL, LIMITED	3-10
SNAP, DRIVELINE; FRONT SUSPENSION AND AXLE	2-19
SNAP, DRIVELINE; REAR SUSPENSION AND AXLES	3-10
SNAP RING CHART—AX 15 MANUAL TRANSMISSION, SELECTIVE	21-334
SNAP RING/THRUST WASHER/THRUST PLATE SPECIFICATIONS, 30RH/32RH	21-335
SOFT TOP DOOR—YJ, HALF-METAL	23-134
SOFT TOP SERVICE INFORMATION—YJ	23-127
SOFT TOP SERVICE—YJ	23-129
SOLENOID AND RELAY, TORQUE CONVERTER CLUTCH (TCC); FUEL/IGNITION (XJ)	8W-30-4
SOLENOID AND RELAY, TORQUE CONVERTER CLUTCH (TCC); TRANSMISSION CONTROLS (YJ)	8W-31-1
SOLENOID AND RELAY—2.5L ENGINE ONLY, TORQUE CONVERTER CLUTCH (TCC); TRANSMISSION CONTROLS (XJ)	8W-31-1
SOLENOID TESTING SPECIFICATIONS, 2.5L STARTER	8A-23
SOLENOID TESTING SPECIFICATIONS, 4.0L STARTER	8A-23
SOLENOIDS, TRANSMISSION VALVE BODY	21-184
SOLVENTS, BRAKE FLUID/LUBRICANTS/ CLEANING	5-2
SOUND BAR REMOVE/INSTALL - XJ	8F-8
SOUND BAR REMOVE/INSTALL - YJ	8F-10
SOUND BAR—XJ	23-94
SPACER BLOCKS—TWO-DOOR VEHICLES, FRONT DOOR	23-53
SPARE TIRE/WHEEL HOLDDOWN AND FLOOR BRACKETS—XJ	23-98
SPARE/WHEEL TIRE CARRIER—YJ, EXTERNAL	23-133
SPARK PLUG CABLE RESISTANCE	8D-14
SPARK PLUG SECONDARY CABLES	8D-14,8D-24
SPARK PLUGS; IGNITION SYSTEMS	8D-12, 8D-23,8D-32
SPARK PLUGS; LUBRICATION AND MAINTENANCE	0-20
SPEAKERS; AUDIO SYSTEMS	8F-1,8F-2
SPEAKERS; RADIO (XJ)	8W-47-1
SPEAKERS; RADIO (XJ-RHD)	8W-47-1
SPEAKERS; RADIO (YJ)	8W-47-1
SPEAKERS REMOVE/INSTALL - XJ	8F-6
SPEAKERS REMOVE/INSTALL - YJ	8F-9
SPECIFICATION NOTATIONS	Intro.-11
SPECIFICATIONS; BATTERY/STARTER/ GENERATOR SERVICE	8B-8
SPECIFICATIONS; BATTERY/STARTING/ CHARGING SYSTEMS DIAGNOSTICS	8A-23
SPECIFICATIONS; BRAKES	5-70
SPECIFICATIONS; COOLING SYSTEM	7-45
SPECIFICATIONS; ENGINES	9-52,9-93
SPECIFICATIONS; FUEL SYSTEM	14-67
SPECIFICATIONS; HORNS	8G-5
SPECIFICATIONS; IGNITION SYSTEMS	8D-32
SPECIFICATIONS; INSTRUMENT PANEL AND GAUGES—XJ	8E-23,8E-43
SPECIFICATIONS; WHEELS AND TIRES	22-12
SPECIFICATIONS, 2.5L STARTER AND SOLENOID TESTING	8A-23
SPECIFICATIONS, 2.5L STARTING SYSTEM COLD CRANKING	8A-23
SPECIFICATIONS, 30RH/32RH GENERAL	21-335
SPECIFICATIONS, 30RH/32RH PRESSURE TEST	21-336
SPECIFICATIONS, 30RH/32RH TORQUE	21-336
SPECIFICATIONS, 4.0L STARTER AND SOLENOID TESTING	8A-23
SPECIFICATIONS, 4.0L STARTING SYSTEM COLD CRANKING	8A-23
SPECIFICATIONS, AW-4 GENERAL	21-337
SPECIFICATIONS, AW-4 TORQUE	21-344
SPECIFICATIONS, AXLE; FRONT SUSPENSION AND AXLE	2-49
SPECIFICATIONS, AXLE; REAR SUSPENSION AND AXLES	3-51
SPECIFICATIONS, BATTERY; BATTERY/ STARTER/GENERATOR SERVICE	8B-8
SPECIFICATIONS, BATTERY; BATTERY/ STARTING/CHARGING SYSTEMS DIAGNOSTICS	8A-23
SPECIFICATIONS, BELT TENSION	7-38
SPECIFICATIONS, BODY LUBRICANT	0-33
SPECIFICATIONS, BRAKE TORQUE	5-70
SPECIFICATIONS, CHARGING SYSTEM	8A-23
SPECIFICATIONS (CONT.), ENGINE	9-53,9-54, 9-94,9-95
SPECIFICATIONS, ENGINE	9-52,9-93
SPECIFICATIONS, GENERATOR	8B-8
SPECIFICATIONS, LUBRICANT; FRONT SUSPENSION AND AXLE	2-22
SPECIFICATIONS, LUBRICANT; REAR SUSPENSION AND AXLES	3-13,3-31
SPECIFICATIONS, MANUAL STEERING GEAR	19-46
SPECIFICATIONS, MEASUREMENT AND TORQUE	Intro.-11
SPECIFICATIONS, NP231/NP242 TORQUE	21-344
SPECIFICATIONS, OUTPUT VOLTAGE	8A-23
SPECIFICATIONS, POWER STEERING GEAR	19-36
SPECIFICATIONS, PUMP OPERATING	19-3
SPECIFICATIONS, RUNOUT	16-4
SPECIFICATIONS, STARTER	8B-8
SPECIFICATIONS, STARTING SYSTEM	8A-23
SPECIFICATIONS, TORQUE; CLUTCH	6-17
SPECIFICATIONS, TORQUE; ENGINES	9-54,9-95
SPECIFICATIONS, TORQUE; EXHAUST SYSTEM AND INTAKE MANIFOLD	11-10
SPECIFICATIONS, TORQUE; FRONT SUSPENSION AND AXLE	2-49
SPECIFICATIONS, TORQUE; HEATING AND AIR CONDITIONING	24-37
SPECIFICATIONS, TORQUE; INTRODUCTION	Intro.-11,Intro.-12
SPECIFICATIONS, TORQUE; PROPELLER SHAFTS	16-15
SPECIFICATIONS, TORQUE; REAR SUSPENSION AND AXLES	3-51
SPECIFICATIONS, TORQUE; STEERING	19-78
SPECIFICATIONS, TRAILER TOWING	Intro.-5, Intro.-9
SPECIFICATIONS, TRANSMISSION/ TRANSFER CASE	21-333
SPECIFICATIONS—ACCESSORIES, TORQUE	23-162
SPECIFICATIONS—MANUAL TRANSMISSION, TORQUE	21-333
SPECIFICATIONS—XJ VEHICLES, ALIGNMENT	2-10
SPECIFICATIONS—XJ VEHICLES, TORQUE	23-161
SPECIFICATIONS—YJ VEHICLES, ALIGNMENT	2-10
SPEED CONTROL DIAGNOSTIC TROUBLE CODE	8H-5
SPEED CONTROL SERVO	8H-1,8H-6
SPEED CONTROL SERVO REMOVE/ INSTALL	8H-9
SPEED CONTROL SWITCH	8H-1,8H-6
SPEED CONTROL SWITCH REMOVE/ INSTALL	8H-9
SPEED CONTROL, VEHICLE; VEHICLE SPEED CONTROL (XJ)	8W-33-1
SPEED CONTROL, VEHICLE; VEHICLE SPEED CONTROL (XJ-RHD)	8W-33-1
SPEED CONTROL—PCM INPUT	14-25
SPEED CONTROL—PCM OUTPUT	14-29
SPEED KNOCK, LOW; FRONT SUSPENSION AND AXLE	2-19
SPEED KNOCK, LOW; REAR SUSPENSION AND AXLES	3-10
SPEED SENSOR	21-192
SPEED SENSOR AIR GAP	5-37
SPEED SENSOR OPERATION, WHEEL	5-37
SPEED SENSOR, PUMP MOTOR; ANTI-LOCK BRAKES (XJ)	8W-32-2
SPEED SENSOR, PUMP MOTOR; ANTI-LOCK BRAKES (XJ-RHD)	8W-32-2
SPEED SENSOR, PUMP MOTOR; ANTI-LOCK BRAKES (YJ)	8W-32-1
SPEED SENSOR ROTOR—SPEEDOMETER DRIVE GEAR	21-193
SPEED SENSOR TEST, VEHICLE	14-48
SPEED SENSOR, VEHICLE; FUEL SYSTEM	14-66
SPEED SENSOR, VEHICLE; FUEL/ IGNITION (XJ)	8W-30-2
SPEED SENSOR, VEHICLE; FUEL/ IGNITION (YJ)	8W-30-3
SPEED SENSOR, VEHICLE; VEHICLE SPEED CONTROL SYSTEM	8H-1,8H-5
SPEED SENSOR, VEHICLE; FUEL/ IGNITION (XJ-RHD)	8W-30-2
SPEED SENSOR—PCM INPUT, VEHICLE	14-25
SPEED SENSORS, WHEEL; ANTI-LOCK BRAKES (XJ)	8W-32-1
SPEED SENSORS, WHEEL; ANTI-LOCK BRAKES (XJ-RHD)	8W-32-1
SPEED SENSORS, WHEEL; ANTI-LOCK BRAKES (YJ)	8W-32-1
SPEED SENSORS, WHEEL; BRAKES	5-34
SPEEDOMETER; INSTRUMENT CLUSTER (XJ)	8W-40-2
SPEEDOMETER; INSTRUMENT CLUSTER (XJ-RHD)	8W-40-1
SPEEDOMETER CABLE	0-33
SPEEDOMETER SERVICE	21-109,21-287,21-309
SPLASH APRONS—YJ, FENDER	23-115
SPLASH LINERS—YJ, WHEELHOUSE	23-115
SPLASH SHIELD, GENERATOR	13-13
SPLASH SHIELD—XJ VEHICLES, FUEL FILLER HOSE	13-4
SPLASH SHIELDS—YJ, FENDER INNER	23-116
SPLICE INDEX; SPLICE INFORMATION (XJ)	8W-70-1
SPLICE INDEX; SPLICE INFORMATION (XJ-RHD)	8W-70-1

Description	Group-Page
SPLICE INDEX; SPLICE INFORMATION (YJ)	8W-70-1
SPLICE LOCATIONS; SPLICE LOCATIONS (XJ)	8W-95-1
SPLICE LOCATIONS; SPLICE LOCATIONS (YJ)	8W-95-1
SPLICE LOCATIONS; WIRING DIAGRAMS (XJ)	8W-1
SPLICE LOCATIONS; WIRING DIAGRAMS (XJ-RHD)	8W-1
SPLICE LOCATIONS; WIRING DIAGRAMS (YJ)	8W-1
SPORT BAR—YJ	23-132
SPRING AND SHOCK ABSORBER DIAGNOSIS	3-3,3-6
SPRING AND SHOCK DIAGNOSIS; FRONT SUSPENSION AND AXLE	2-13,2-15
SPRING AND SHOCK DIAGNOSIS; REAR SUSPENSION AND AXLES	3-3,3-6
SPRING, COIL	2-14
SPRING EYE BUSHING REPLACEMENT, LEAF; FRONT SUSPENSION AND AXLE	2-17
SPRING EYE BUSHING REPLACEMENT, LEAF; REAR SUSPENSION AND AXLES	3-5,3-7
SPRING IDENTIFICATION, AW-4 VALVE	21-343
SPRING, LEAF; FRONT SUSPENSION AND AXLE	2-16
SPRING, LEAF; REAR SUSPENSION AND AXLES	3-4,3-7
SPRING REPLACEMENT, VALVE STEM SEAL	9-65
SPRINGS, ACCUMULATOR PISTONS	21-189
SPRINGS AND OIL SEALS, VALVE	9-23
SPRINGS, VALVES AND VALVE	9-27,9-69
SPROCKETS, TIMING CHAIN	9-31,9-73
STABILIZER BAR; FRONT SUSPENSION AND AXLE	2-11,2-15
STABILIZER BAR; REAR SUSPENSION AND AXLES	3-5
STALL TEST, CONVERTER	21-74
STALL TEST, TORQUE CONVERTER	21-178
STANDARD SERVICE PROCEDURES	9-1
STANDARD WIPERS	8W-53-1
STARTER AND SOLENOID TESTING SPECIFICATIONS, 2.5L	8A-23
STARTER AND SOLENOID TESTING SPECIFICATIONS, 4.0L	8A-23
STARTER AND STARTER RELAY	8B-4
STARTER MOTOR RELAY TEST	14-51
STARTER NOISE DIAGNOSIS	8A-16
STARTER NOISE DIAGNOSIS, 2.5L	8A-16
STARTER RELAY CONNECTIONS	8A-15
STARTER RELAY REMOVE/INSTALL	8B-6
STARTER RELAY, STARTER	8B-4
STARTER REMOVE/INSTALL—2.5L	8B-4
STARTER REMOVE/INSTALL—4.0L	8B-5
STARTER SPECIFICATIONS	8B-8
STARTING PROCEDURE, JUMP	0-9
STARTING SYSTEM; BATTERY/ STARTING/CHARGING SYSTEMS DIAGNOSTICS	8A-11
STARTING SYSTEM; STARTING SYSTEM (XJ)	8W-21-1
STARTING SYSTEM; STARTING SYSTEM (XJ-RHD)	8W-21-1
STARTING SYSTEM; STARTING SYSTEM (YJ)	8W-21-1
STARTING SYSTEM COLD CRANKING SPECIFICATIONS, 2.5L	8A-23
STARTING SYSTEM COLD CRANKING SPECIFICATIONS, 4.0L	8A-23
STARTING SYSTEM DIAGNOSIS	8A-12
STARTING SYSTEM SPECIFICATIONS	8A-23
STARTING, TOWING AND HOISTING, JUMP	0-9
STATEMENT—GAS ENGINES, FUEL USAGE	0-19
STATIONARY GLASS	23-144
STATIONARY GLASS WATER LEAK DETECTION AND REPAIR—XJ	23-76
STATIONARY GLASS WATER LEAK DETECTION AND REPAIR—YJ	23-150
STATIONARY WINDOW GLASS	23-66
STATIONARY WINDOW GLASS—XJ, REAR DOOR	23-46
STATOR CLUTCH INSPECTION, TORQUE CONVERTER	21-199
STEERING COLUMN GENERAL SERVICE—XJ	19-47
STEERING COLUMN, NON-TILT	19-60
STEERING COLUMN, TILT	19-66
STEERING COLUMN—XJ	19-78
STEERING COLUMN—YJ	19-58,19-78
STEERING DAMPER	19-17,19-20
STEERING GEAR ADJUSTMENTS	19-24
STEERING GEAR, MANUAL; LUBRICATION AND MAINTENANCE	0-30
STEERING GEAR, MANUAL; STEERING	19-37, 19-78
STEERING GEAR, POWER	19-78
STEERING GEAR, RECIRCULATING BALL POWER	19-21
STEERING GEAR REPLACEMENT	19-23,19-45
STEERING GEAR SPECIFICATIONS, MANUAL	19-46
STEERING GEAR SPECIFICATIONS, POWER	19-36
STEERING GEARS, RECIRCULATING-BALL POWER	19-74
STEERING KNUCKLE AND BALL STUDS	2-32
STEERING LINKAGE	0-28
STEERING LINKAGE—XJ	19-16,19-78
STEERING LINKAGE—YJ	19-19,19-78
STEERING PRESSURE SWITCH, POWER; FUEL/IGNITION (XJ)	8W-30-5
STEERING PRESSURE SWITCH, POWER; FUEL/IGNITION (YJ)	8W-30-4
STEERING PRESSURE SWITCH—2.5L ENGINE ONLY, POWER	14-63
STEERING PRESSURE SWITCH—PCM INPUT, POWER	14-24
STEERING PUMP, POWER	19-11,19-74,19-78
STEERING PUMP—INITIAL OPERATION, POWER	19-15
STEERING RHD	19-74
STEERING SYSTEM COMPONENTS	19-1
STEERING SYSTEM DIAGNOSIS, MANUAL	19-38
STEERING SYSTEM DIAGNOSIS, POWER	19-3, 19-4,19-5,19-6,19-7,19-8,19-9
STEERING SYSTEM DIAGNOSIS, SUSPENSION	2-7
STEERING SYSTEM, POWER	0-29
STEERING WHEEL	19-49,19-58
STEM SEAL AND SPRING REPLACEMENT, VALVE	9-65
STEP MOLDING—YJ, BODY SIDE	23-115
STOP LAMP (CHMSL)—XJ, CENTER HIGH MOUNTED	8L-12
STOP LAMP (CHMSL)—YJ, CENTER HIGH MOUNTED	8L-28
STOP LAMP RELAY; TRAILER TOW (XJ)	8W-54-1
STOP LAMP RELAY; TRAILER TOW (XJ-RHD)	8W-54-1
STOP LAMP SWITCH	8H-1,8H-6
STOP LAMPS AND CHMSL LAMPS; REAR LIGHTING (XJ)	8W-51-1
STOP LAMPS AND CHMSL LAMPS; REAR LIGHTING (XJ-RHD)	8W-51-1
STOP LAMPS AND CHMSL LAMPS; REAR LIGHTING (YJ)	8W-51-1
STORAGE BIN REMOVE/INSTALL, SUNGLASSES	8C-7
STORAGE, REMOTE GARAGE DOOR OPENER	8C-1
STORAGE, SUNGLASSES	8C-1
STORAGE—XJ, JACK	23-97
STRAIGHTENING, FRAME	13-13
STRAP, FUEL TANK SUPPORT	13-4
STRENGTH, BOLT	Intro.-15
STRIKER AND BUMPER—XJ, REAR SEATBACK LATCH	23-84
STRIKER REPLACEMENT—XJ, HOOD LATCH	23-11
STRIKER REPLACEMENT—XJ, SAFETY LATCH	23-11
STRIKER—YJ, HALF-METAL DOOR LATCH	23-135
STRIKER—YJ, TAILGATE LATCH	23-123
STRIPES/DECALS—XJ, BODY	23-21
STRIPES/DECALS—YJ, BODY	23-116
STRIP—XJ, DOOR EDGE GUARD/EDGE PROTECTOR	23-54
STUD REPLACEMENT—XJ, LIFTGATE SUPPORT ROD BALL	23-63
STUDS, STEERING KNUCKLE AND BALL	2-32
SUN GEAR AND NO. 1 ONE-WAY CLUTCH OVERHAUL	21-238
SUNGLASSES STORAGE	8C-1
SUNGLASSES STORAGE BIN REMOVE/ INSTALL	8C-7
SUNVISORS—XJ	23-93
SUNVISORS—YJ	23-155
SUPPLY TEST, VACUUM	8H-6
SUPPORT BRACKET REPLACEMENT—XJ, INTERIOR REARVIEW MIRROR	23-68
SUPPORT CROSSMEMBER—XJ, RADIATOR	23-6
SUPPORT OVERHAUL, OVERDRIVE	21-226
SUPPORT OVERHAUL, OVERRUNNING CLUTCH—LOW-REVERSE DRUM—REAR	21-125
SUPPORT PLATE REPLACEMENT	5-58
SUPPORT ROD BALL STUD REPLACEMENT—XJ, LIFTGATE	23-63
SUPPORT ROD CYLINDER DISPOSAL—XJ, LIFTGATE	23-63
SUPPORT ROD CYLINDER—XJ, LIFTGATE	23-62
SUPPORT STRAP, FUEL TANK	13-4
SUPPORTS, ENGINE	0-21
SUPPRESSION, RADIO NOISE	8F-2
SURFACE TOUCH-UP, PAINTED	23-158
SUSPENSION AND STEERING SYSTEM DIAGNOSIS	2-7
SUSPENSION ARM, LOWER	2-13
SUSPENSION ARM, UPPER	2-12
SUSPENSION COMPONENTS	3-1
SUSPENSION COMPONENTS, XJ FRONT	2-49
SUSPENSION COMPONENTS, XJ REAR	3-51
SUSPENSION COMPONENTS, YJ FRONT	2-49
SUSPENSION COMPONENTS, YJ REAR	3-51
SUSPENSION, FRONT	2-1
SUSPENSION, XJ	3-3
SUSPENSION, XJ FRONT	2-11
SUSPENSION, YJ	3-6
SUSPENSION, YJ FRONT	2-15
SWITCH - XJ, MULTI-FUNCTION	8J-4
SWITCH, ACCELERATION; ANTI-LOCK BRAKES (XJ)	8W-32-1
SWITCH, ACCELERATION; ANTI-LOCK BRAKES (XJ-RHD)	8W-32-1
SWITCH, ACCELERATION; ANTI-LOCK BRAKES (YJ)	8W-32-1
SWITCH, ACCELERATION; BRAKES	5-35
SWITCH ADJUSTMENT, BRAKELIGHT	5-32
SWITCH AND KEY CYLINDER SERVICE, IGNITION	8D-26
SWITCH AND PLUG LOCATIONS, TRANSMISSION	21-34
SWITCH, BLOWER MOTOR	24-16
SWITCH, BRAKE	14-59
SWITCH CONTINUITY (LEFT POSITION), POWER MIRROR	8T-3
SWITCH CONTINUITY, POWER SEAT	8R-2
SWITCH CONTINUITY (RIGHT POSITION), POWER MIRROR	8T-3
SWITCH CONTINUITY TESTS, IGNITION	8D-30
SWITCH, DEFOGGER	8N-1,8N-3
SWITCH, DRIVER'S DOOR JAMB	8U-1,8U-2
SWITCH, DRIVER'S SEAT BELT	8U-1,8U-3
SWITCH, EXTENDED IDLE	8W-30-5
SWITCH, FIN SENSING CYCLING CLUTCH	24-15,24-31
SWITCH, FOUR-WHEEL DRIVE (4WD); INSTRUMENT CLUSTER (XJ-RHD)	8W-40-2
SWITCH, FOUR-WHEEL DRIVE (4WD); TRANSMISSION CONTROLS (XJ-RHD)	8W-31-1
SWITCH, HORN	8G-1
SWITCH, IGNITION; BRAKES	5-35
SWITCH, IGNITION; FUEL/IGNITION (XJ)	8W-30-1
SWITCH, IGNITION; FUEL/IGNITION (YJ)	8W-30-1
SWITCH, IGNITION; FUEL/IGNITION (XJ-RHD)	8W-30-1
SWITCH, IGNITION KEY-IN	8U-1,8U-2
SWITCH INPUT, BRAKE; ANTI-LOCK BRAKES (XJ)	8W-32-2
SWITCH INPUT, BRAKE; ANTI-LOCK BRAKES (XJ-RHD)	8W-32-2
SWITCH INPUT, BRAKE; ANTI-LOCK BRAKES (YJ)	8W-32-2
SWITCH INPUT, BRAKE; FUEL/IGNITION (XJ)	8W-30-5

Description	Group-Page
SWITCH INPUT, BRAKE; FUEL/IGNITION (YJ)	8W-30-5
SWITCH INPUT, BRAKE; FUEL/IGNITION (XJ-RHD)	8W-30-5
SWITCH INSTALLATION, ACCELERATION	5-39
SWITCH INSTALLATION, BRAKELIGHT	5-32
SWITCH LAMP, IGNITION; INTERIOR LIGHTING (XJ)	8W-44-1
SWITCH LAMP, IGNITION; INTERIOR LIGHTING (XJ-RHD)	8W-44-1
SWITCH, LIFTGATE WIPER/WASHER	8K-16,8K-5
SWITCH OPERATION, ACCELERATION	5-37
SWITCH, PARK NEUTRAL	14-63
SWITCH, PARKING BRAKE	5-68
SWITCH, PARK/NEUTRAL POSITION; FUEL/IGNITION (XJ)	8W-30-4
SWITCH, PARK/NEUTRAL POSITION; FUEL/IGNITION (YJ)	8W-30-4
SWITCH, PARK/NEUTRAL POSITION; TRANSMISSION AND TRANSFER CASE	21-183
SWITCH, PARK/NEUTRAL POSITION; FUEL/IGNITION (XJ-RHD)	8W-30-4
SWITCH, PASSENGER'S POWER LOCK	8P-6
SWITCH, PASSENGER'S POWER WINDOW	8S-6
SWITCH, POWER BRAKE BOOSTER—BRAKE PEDAL—BRAKELIGHT	5-22
SWITCH, POWER LOCK	8P-1
SWITCH, POWER MIRROR	8T-1,8T-2
SWITCH, POWER SEAT	8R-1,8R-2
SWITCH, POWER STEERING PRESSURE; FUEL/IGNITION (XJ)	8W-30-5
SWITCH, POWER STEERING PRESSURE; FUEL/IGNITION (YJ)	8W-30-4
SWITCH, POWER WINDOW	8S-1,8S-2
SWITCH REMOVAL, ACCELERATION	5-39
SWITCH REMOVAL, BRAKELIGHT	5-32
SWITCH REMOVE/INSTALL - XJ, MULTI-FUNCTION	8J-5
SWITCH REMOVE/INSTALL - YJ, TURN SIGNAL/HAZARD WARNING	8J-5
SWITCH REMOVE/INSTALL, DEFOGGER	8N-4
SWITCH REMOVE/INSTALL, HEADLAMP	8E-19
SWITCH REMOVE/INSTALL, HEADLAMP OR PANEL DIMMER	8E-42
SWITCH REMOVE/INSTALL, HORN	8G-3
SWITCH REMOVE/INSTALL, LIFTGATE WIPER/WASHER	8K-24,8K-8
SWITCH REMOVE/INSTALL, POWER LOCK	8P-8
SWITCH REMOVE/INSTALL, POWER MIRROR	8T-4
SWITCH REMOVE/INSTALL, POWER SEAT	8R-3
SWITCH REMOVE/INSTALL, POWER WINDOW	8S-7
SWITCH REMOVE/INSTALL, SPEED CONTROL	8H-9
SWITCH REMOVE/INSTALL, WINDSHIELD WIPER/WASHER	8K-20,8K-7
SWITCH REPLACEMENT, BLOWER MOTOR/AIR DOOR MOTOR	24-32
SWITCH REPLACEMENT—XJ, FOG LAMP	8L-10
SWITCH REPLACEMENT—YJ, FOG LAMP	8L-26
SWITCH REPLACEMENT—YJ, HEADLAMP DIMMER	8L-26
SWITCH SERVICE, IGNITION	19-54
SWITCH SERVICE, PARK/NEUTRAL POSITION	21-109
SWITCH SERVICE PROCEDURES—XJ, MULTI-FUNCTION	8L-11
SWITCH, SPEED CONTROL	8H-1,8H-6
SWITCH, STOP LAMP	8H-1,8H-6
SWITCH TEST, EXTENDED IDLE	14-48
SWITCH TESTING, INTERMITTENT WIPE	8K-15
SWITCH TESTING, NON-INTERMITTENT WIPE	8K-14
SWITCH TESTING PROCEDURES—XJ, MULTI-FUNCTION	8L-4
SWITCH, TRANSMISSION COMFORT; TRANSMISSION CONTROLS (XJ-RHD)	8W-31-1
SWITCH, WINDSHIELD WIPER/WASHER	8K-13, 8K-4
SWITCH (XJ ONLY), HEADLAMP	8U-1,8U-3
SWITCH—2.5L ENGINE ONLY, POWER STEERING PRESSURE	14-63
SWITCH—2-DOOR (LHD), DRIVER'S POWER LOCK	8P-3
SWITCH—2-DOOR (LHD), DRIVER'S POWER WINDOW	8S-4
SWITCH—2-DOOR (RHD), DRIVER'S POWER LOCK	8P-4
SWITCH—2-DOOR (RHD), DRIVER'S POWER WINDOW	8S-5
SWITCH—4-DOOR, DRIVER'S POWER LOCK	8P-5
SWITCH—4-DOOR, DRIVER'S POWER WINDOW	8S-3
SWITCH—PCM INPUT, BRAKE	14-22
SWITCH—PCM INPUT, EXTENDED IDLE	14-23
SWITCH—PCM INPUT, PARK/NEUTRAL	14-24
SWITCH—PCM INPUT, POWER STEERING PRESSURE	14-24
SWITCH—XJ, HEADLAMP	8L-10
SWITCH—XJ MODELS, IGNITION	8D-26
SWITCH—YJ, HEADLAMP	8L-26
SWITCH—YJ MODELS, IGNITION	8D-29
SYMBOLS; WIRING DIAGRAMS—GENERAL INFORMATION (XJ)	8W-2
SYMBOLS, INTERNATIONAL	0-1
SYMBOLS, INTERNATIONAL VEHICLE CONTROL AND DISPLAY	Intro.-5
SYMBOLS, VEHICLE CONTROL AND DISPLAY	Intro.-10
SYSTEM - XJ, TURN SIGNAL/HAZARD WARNING	8J-3
SYSTEM - YJ, HAZARD WARNING	8J-4
SYSTEM - YJ, TURN SIGNAL	8J-3
SYSTEM, A/C-HEATER; AIR CONDITIONING/HEATER (XJ)	8W-42-1
SYSTEM, A/C-HEATER; AIR CONDITIONING/HEATER (XJ-RHD)	8W-42-1
SYSTEM, AIRBAG; RESTRAINT SYSTEMS	8M-1
SYSTEM, AIRBAG; STEERING	19-47
SYSTEM CAPACITIES, COOLING	7-45
SYSTEM, CHARGING; BATTERY/STARTING/CHARGING SYSTEMS DIAGNOSTICS	8A-17
SYSTEM, CHARGING; CHARGING SYSTEM (XJ)	8W-20-1
SYSTEM, CHARGING; CHARGING SYSTEM (XJ-RHD)	8W-20-1
SYSTEM, CHARGING; CHARGING SYSTEM (YJ)	8W-20-1
SYSTEM, CHARGING REFRIGERANT	24-11
SYSTEM CLEANING/REVERSE FLUSHING, COOLING	7-22
SYSTEM COLD CRANKING SPECIFICATIONS, 2.5L STARTING	8A-23
SYSTEM COLD CRANKING SPECIFICATIONS, 4.0L STARTING	8A-23
SYSTEM COMPONENTS, COOLING	7-1
SYSTEM COMPONENTS, STEERING	19-1
SYSTEM, COOLANT RESERVE/OVERFLOW	7-24
SYSTEM COOLANT ROUTING	7-1
SYSTEM, COOLING; COOLING SYSTEM	7-1
SYSTEM, COOLING; HEATING AND AIR CONDITIONING	24-10
SYSTEM, CRANKCASE VENTILATION; EMISSION CONTROL SYSTEMS	25-5
SYSTEM, CRANKCASE VENTILATION; LUBRICATION AND MAINTENANCE	0-19
SYSTEM DESCRIPTION	5-33
SYSTEM DIAGNOSIS, CHARGING	8A-19
SYSTEM DIAGNOSIS (CONT.), COOLING	7-10, 7-11,7-12,7-7,7-8,7-9
SYSTEM DIAGNOSIS, COOLING	7-6
SYSTEM DIAGNOSIS, EXHAUST	11-2
SYSTEM DIAGNOSIS, HEATING	24-18
SYSTEM DIAGNOSIS, MANUAL STEERING	19-38
SYSTEM DIAGNOSIS, POWER STEERING	19-3, 19-4,19-5,19-6,19-7,19-8,19-9
SYSTEM DIAGNOSIS, STARTING	8A-12
SYSTEM DIAGNOSIS, SUSPENSION AND STEERING	2-7
SYSTEM, DRAINING COOLING	7-21
SYSTEM, EMISSION CONTROL	0-20
SYSTEM, ENGINE COOLING	0-18
SYSTEM, EVACUATING REFRIGERANT	24-11
SYSTEM, EVAP (EVAPORATION) CONTROL	25-4
SYSTEM, EXHAUST; EXHAUST SYSTEM AND INTAKE MANIFOLD	11-1
SYSTEM, EXHAUST; LUBRICATION AND MAINTENANCE	0-21
SYSTEM, EXHAUST GAS RECIRCULATION (EGR)	25-1
SYSTEM FANS, COOLING	7-32
SYSTEM FOR LEAKS, TESTING COOLING	7-22
SYSTEM, FUEL	14-67
SYSTEM, FUEL DELIVERY	14-3
SYSTEM, HAZARD WARNING	8J-1
SYSTEM, HEATER; AIR CONDITIONING/HEATER (XJ)	8W-42-1
SYSTEM, HEATER; AIR CONDITIONING/HEATER (XJ-RHD)	8W-42-1
SYSTEM, HEATER; AIR CONDITIONING/HEATER (YJ)	8W-42-1
SYSTEM HOSES, COOLING	7-32
SYSTEM, HYDRAULIC	21-169
SYSTEM INDICATOR LAMP, CHARGING; INSTRUMENT CLUSTER (XJ)	8W-40-3
SYSTEM, LIFTGATE WASHER	8K-5
SYSTEM, LIFTGATE WIPER	8K-4
SYSTEM, LIFTGATE WIPER/WASHER	8K-10, 8K-16,8K-1
SYSTEM, LUBRICATION	9-37,9-79
SYSTEM MAINTENANCE, EMISSION CONTROL	0-4
SYSTEM, POWER BRAKE	0-30
SYSTEM, POWER LOCK	8P-2
SYSTEM, POWER MIRROR	8T-1
SYSTEM, POWER STEERING	0-29
SYSTEM POWER-UP AND INITIALIZATION, ABS	5-35
SYSTEM PRESSURE RELEASE PROCEDURE, FUEL	14-62
SYSTEM PRESSURE TEST, FUEL	14-51,14-6
SYSTEM, REAR WIPER; WIPERS (XJ)	8W-53-1
SYSTEM, REAR WIPER; WIPERS (XJ-RHD)	8W-53-1
SYSTEM, REAR WIPER; WIPERS (YJ)	8W-53-1
SYSTEM, RECOVERING REFRIGERANT	24-11
SYSTEM, REFILLING COOLING	7-21
SYSTEM SCHEMATICS, PCM	14-41
SYSTEM SERVICE (DEPLOYED), AIRBAG	8M-2
SYSTEM SPECIFICATIONS, CHARGING	8A-23
SYSTEM SPECIFICATIONS, STARTING	8A-23
SYSTEM, STARTING; BATTERY/STARTING/CHARGING SYSTEMS DIAGNOSTICS	8A-11
SYSTEM, STARTING; STARTING SYSTEM (XJ)	8W-21-1
SYSTEM, STARTING; STARTING SYSTEM (XJ-RHD)	8W-21-1
SYSTEM, STARTING; STARTING SYSTEM (YJ)	8W-21-1
SYSTEM, TURN SIGNAL	8J-1
SYSTEM, USING ON-BOARD DIAGNOSTIC; BATTERY/STARTING/CHARGING SYSTEMS DIAGNOSTICS	8A-22
SYSTEM, USING ON-BOARD DIAGNOSTIC; VEHICLE SPEED CONTROL SYSTEM	8H-5
SYSTEM WARNING LIGHT	5-35
SYSTEM, WINDSHIELD WASHER	8K-10,8K-12, 8K-1,8K-4
SYSTEM, WINDSHIELD WIPER	8K-10,8K-12, 8K-1,8K-3
TABLE, BATTERY CHARGING TIME	8A-8
TACHOMETER; INSTRUMENT CLUSTER (XJ)	8W-40-2
TACHOMETER; INSTRUMENT CLUSTER (XJ-RHD)	8W-40-2
TACHOMETER SIGNAL; FUEL/IGNITION (XJ)	8W-30-5
TACHOMETER SIGNAL; FUEL/IGNITION (YJ)	8W-30-5
TACHOMETER SIGNAL; FUEL/IGNITION (XJ-RHD)	8W-30-4
TACHOMETER—PCM OUTPUT	14-29
TAIL LAMPS AND LICENSE PLATE LAMPS; REAR LIGHTING (YJ)	8W-51-1
TAIL LAMPS AND REAR LICENSE PLATE LAMPS; REAR LIGHTING (XJ)	8W-51-1
TAIL LAMPS AND REAR LICENSE PLATE LAMPS; REAR LIGHTING (XJ-RHD)	8W-51-1
TAILGATE ADJUSTMENT—YJ	23-121
TAILGATE HINGE—YJ	23-121
TAILGATE LATCH AND RELEASE HANDLE—YJ	23-122

Description	Group-Page
TAILGATE LATCH STRIKER—YJ	23-123
TAILGATE LOCK CYLINDER—YJ	23-122
TAILGATE WEATHERSTRIP SEAL—YJ	23-123
TAILGATE—YJ	23-121
TAILPIPE—XJ VEHICLES, MUFFLER AND EXHAUST	11-5
TAILPIPE—YJ VEHICLES, MUFFLER AND EXHAUST	11-6
TAKE OUTS; WIRING DIAGRAMS—GENERAL INFORMATION (XJ)	8W-2
TANK CAPACITIES, FUEL	14-13,14-67
TANK FILLER TUBE CAP, FUEL; EMISSION CONTROL SYSTEMS	25-4,25-7
TANK FILLER TUBE CAP, FUEL; FUEL SYSTEM	14-13
TANK FILLER TUBE, NO-LEAD FUEL	14-13
TANK, FUEL	14-13
TANK PRESSURE RELIEF/ROLLOVER VALVE, FUEL	14-16,14-62
TANK SKID PLATE, FUEL	13-15,13-3
TANK SUPPORT STRAP, FUEL	13-4
TANKS, FUEL	14-13,14-62
TAPPETS, HYDRAULIC	9-24,9-66
TELL-TALE CLUSTER (LHD)	8E-10
TEMPERATURE AND PRESSURE CHART, XJ PERFORMANCE	24-13
TEMPERATURE AND PRESSURE CHART, YJ PERFORMANCE	24-13
TEMPERATURE CONTROL THERMOSTAT	24-34
TEMPERATURE GAUGE, ENGINE COOLANT; INSTRUMENT CLUSTER (XJ)	8W-40-1
TEMPERATURE SENSOR, COOLANT	25-7
TEMPERATURE SENSOR, ENGINE COOLANT; FUEL SYSTEM	14-60
TEMPERATURE SENSOR, ENGINE COOLANT; FUEL/IGNITION (XJ)	8W-30-3
TEMPERATURE SENSOR, ENGINE COOLANT; FUEL/IGNITION (YJ)	8W-30-3
TEMPERATURE SENSOR, ENGINE COOLANT; IGNITION SYSTEMS	8D-19,8D-5
TEMPERATURE SENSOR, ENGINE COOLANT; FUEL/IGNITION (XJ-RHD)	8W-30-3
TEMPERATURE SENSOR, INTAKE AIR; FUEL/IGNITION (XJ)	8W-30-4
TEMPERATURE SENSOR, INTAKE AIR; FUEL/IGNITION (YJ)	8W-30-4
TEMPERATURE SENSOR, INTAKE AIR; FUEL/IGNITION (XJ-RHD)	8W-30-4
TEMPERATURE SENSOR, INTAKE MANIFOLD AIR; FUEL SYSTEM	14-60
TEMPERATURE SENSOR, INTAKE MANIFOLD AIR; IGNITION SYSTEMS	8D-23,8D-5
TEMPERATURE, SENSOR RESISTANCE (OHMS)—COOLANT TEMPERATURE SENSOR/MANIFOLD AIR	14-46
TEMPERATURE SENSOR TEST, ENGINE COOLANT; FUEL SYSTEM	14-46
TEMPERATURE SENSOR TEST, ENGINE COOLANT; IGNITION SYSTEMS	8D-9
TEMPERATURE SENSOR TEST, INTAKE MANIFOLD AIR; FUEL SYSTEM	14-46
TEMPERATURE SENSOR TEST, INTAKE MANIFOLD AIR; IGNITION SYSTEMS	8D-11
TEMPERATURE SENSOR/MANIFOLD AIR TEMPERATURE, SENSOR RESISTANCE (OHMS)—COOLANT	14-46
TEMPERATURE SENSOR—PCM INPUT, ENGINE COOLANT	14-23
TEMPERATURE SENSOR—PCM INPUT, INTAKE MANIFOLD AIR	14-22
TEMPERATURE WARNING LAMP, ENGINE COOLANT; INSTRUMENT CLUSTER (XJ)	8W-40-1
TEMPERATURE WARNING LAMP, ENGINE COOLANT; INSTRUMENT CLUSTER (XJ-RHD)	8W-40-1
TENSION, DRIVE BELT	7-45
TENSION SPECIFICATIONS, BELT	7-38
TENSIONER ADJUSTMENT (XJ/YJ), PARKING BRAKE CABLE	5-69
TENSIONER REPLACEMENT (XJ), PARKING BRAKE CABLE	5-66
TENSIONER—XJ MODELS WITH RIGHT HAND DRIVE, AUTOMATIC BELT	7-42
TENSION—EXCEPT RIGHT HAND DRIVE (RHD), BELT	7-38
TENSION—EXCEPT RIGHT HAND DRIVE (RHD) MODELS, BELT	7-45
TENSION—RIGHT HAND DRIVE (RHD), BELT	7-38
TERMINAL REPLACEMENT; WIRING DIAGRAMS—GENERAL INFORMATION (XJ)	8W-8
TERMINAL REPLACEMENT, CONNECTOR; WIRING DIAGRAMS—GENERAL INFORMATION (XJ)	8W-7
TERMINAL/CONNECTOR REPAIR—MOLEX CONNECTORS; WIRING DIAGRAMS—GENERAL INFORMATION (XJ)	8W-6
TEST, AUTOMATIC SHUTDOWN (ASD) RELAY	8D-6
TEST, CAMSHAFT POSITION SENSOR; FUEL SYSTEM	14-46
TEST, CAMSHAFT POSITION SENSOR; IGNITION SYSTEMS	8D-6
TEST, COMPASS/DISPLAY SELF-DIAGNOSTIC	8C-2
TEST, CONVERTER STALL	21-74
TEST, CRANKSHAFT POSITION SENSOR; FUEL SYSTEM	14-47
TEST, CRANKSHAFT POSITION SENSOR; IGNITION SYSTEMS	8D-7
TEST, CYLINDER COMBUSTION PRESSURE LEAKAGE	9-6
TEST, CYLINDER COMPRESSION PRESSURE	9-5
TEST DIAGNOSIS, CYLINDER COMBUSTION PRESSURE LEAKAGE	9-7
TEST, ENGINE COOLANT TEMPERATURE SENSOR; FUEL SYSTEM	14-46
TEST, ENGINE COOLANT TEMPERATURE SENSOR; IGNITION SYSTEMS	8D-9
TEST, EXTENDED IDLE SWITCH	14-48
TEST, FUEL INJECTOR	14-51
TEST, FUEL PRESSURE LEAK DOWN	14-8
TEST, FUEL PUMP CAPACITY	14-7
TEST, FUEL SYSTEM PRESSURE	14-51,14-6
TEST, HYDRAULIC PRESSURE	21-177,21-72
TEST, IDLE AIR CONTROL MOTOR	14-49
TEST, INTAKE MANIFOLD AIR TEMPERATURE SENSOR; FUEL SYSTEM	14-46
TEST, INTAKE MANIFOLD AIR TEMPERATURE SENSOR; IGNITION SYSTEMS	8D-11
TEST, MANIFOLD ABSOLUTE PRESSURE (MAP) SENSOR; FUEL SYSTEM	14-47
TEST, MANIFOLD ABSOLUTE PRESSURE (MAP) SENSOR; IGNITION SYSTEMS	8D-11
TEST, MANUAL SHIFTING	21-177
TEST, MASTER CYLINDER/POWER BOOSTER	5-8
TEST, OXYGEN SENSOR (O2S) HEATING ELEMENT	14-48
TEST, POWER BOOSTER CHECK VALVE	5-9
TEST, POWER BOOSTER VACUUM	5-9
TEST PROCEDURES, HEATING AND AIR CONDITIONING	24-15
TEST, REFRIGERANT SERVICE AND PERFORMANCE	24-11
TEST, STARTER MOTOR RELAY	14-51
TEST, THROTTLE POSITION SENSOR	8D-15
TEST, THROTTLE POSITION SENSOR (TPS)	14-48
TEST, TORQUE CONVERTER CLUTCH RELAY	14-48
TEST, TORQUE CONVERTER STALL	21-178
TEST, VACUUM SUPPLY	8H-6
TEST, VEHICLE SPEED SENSOR	14-48
TESTING, AUTOMATIC SHUTDOWN (ASD) RELAY	14-46
TESTING COOLING SYSTEM FOR LEAKS	7-22
TESTING, FUEL PUMP RELAY	14-47
TESTING, INTERMITTENT WIPE SWITCH	8K-15
TESTING, NON-INTERMITTENT WIPE SWITCH	8K-14
TESTING PROCEDURES—XJ, MULTI-FUNCTION SWITCH	8L-4
TESTING REFRIGERANT, LEAK	24-11
TESTING, ROAD	5-5
TESTING SPECIFICATIONS, 2.5L STARTER AND SOLENOID	8A-23
TESTING SPECIFICATIONS, 4.0L STARTER AND SOLENOID	8A-23
TESTING, TRANSMISSION COOLER FLOW	21-113
TESTS, AIR CONDITIONING PERFORMANCE	24-12
TESTS, IGNITION SWITCH CONTINUITY	8D-30
TESTS, OXYGEN (O2S) SENSOR	8D-15
TESTS, SYSTEM	8N-1
TESTS, TROUBLESHOOTING; WIRING DIAGRAMS—GENERAL INFORMATION (XJ)	8W-4
TESTS, WATER PUMP	7-13
THERMOMETER	8C-1
THERMOMETER DIAGNOSIS	8C-2
THERMOSTAT	7-17
THERMOSTAT, TEMPERATURE CONTROL	24-34
THERMOSTATIC CONTROL	24-16
THICKNESS, AW-4 CLUTCH DISC AND PLATE	21-338
THICKNESS, DISC BRAKE ROTOR	5-52
THIS GROUP, HOW TO USE; WIRING DIAGRAMS (XJ)	8W-1
THIS GROUP, HOW TO USE; WIRING DIAGRAMS (XJ-RHD)	8W-1
THIS GROUP, HOW TO USE; WIRING DIAGRAMS (YJ)	8W-1
THREAD NOTATION—SAE AND METRIC	Intro.-13
THREADS, REPAIR DAMAGED OR WORN	9-4
THROTTLE BODY	14-33,14-64
THROTTLE CABLE	14-17
THROTTLE CABLE, ACCELERATOR PEDAL	14-17,14-58
THROTTLE CABLE ADJUSTMENT, TRANSMISSION	21-194
THROTTLE CABLE REPLACEMENT, TRANSMISSION	21-193
THROTTLE POSITION SENSOR; FUEL/IGNITION (XJ)	8W-30-4
THROTTLE POSITION SENSOR; FUEL/IGNITION (YJ)	8W-30-4
THROTTLE POSITION SENSOR; IGNITION SYSTEMS	8D-5
THROTTLE POSITION SENSOR; FUEL/IGNITION (XJ-RHD)	8W-30-4
THROTTLE POSITION SENSOR TEST	8D-15
THROTTLE POSITION SENSOR (TPS); FUEL SYSTEM	14-65
THROTTLE POSITION SENSOR (TPS); IGNITION SYSTEMS	8D-25
THROTTLE POSITION SENSOR (TPS) SERVICE	21-193
THROTTLE POSITION SENSOR (TPS) TEST	14-48
THROTTLE POSITION SENSOR (TPS)—PCM INPUT	14-25
THROTTLE VALVE CABLE ADJUSTMENT, TRANSMISSION	21-71
THROTTLE VALVE CABLE ADJUSTMENT (XJ/YJ)	21-101
THROUGH DEEP WATER PUDDLES, BRAKES DO NOT HOLD AFTER DRIVING	5-7
TIE ROD	19-16,19-19
TIGHTENING, WHEEL NUT	5-54,5-59
TILT STEERING COLUMN	19-66
TIME LAG TEST	21-178
TIME TABLE, BATTERY CHARGING	8A-8
TIMING CASE COVER	9-31,9-72
TIMING CASE COVER OIL SEAL REPLACEMENT	9-30,9-73
TIMING CHAIN AND SPROCKETS	9-31,9-73
TIMING, IGNITION	8D-11
TIMING, VALVE	9-30,9-71
TIPS, TRANSMISSION ASSEMBLY	21-155
TIRE AND WHEEL BALANCE	22-6
TIRE AND WHEEL RUNOUT	22-8
TIRE CARRIER—YJ, EXTERNAL SPARE/WHEEL	23-133
TIRE INFLATION PRESSURES	22-2
TIRE NOISE OR VIBRATION	22-4
TIRE PROBLEMS, WHEEL	5-7
TIRE WEAR PATTERNS	22-4
TIRES; LUBRICATION AND MAINTENANCE	0-32
TIRES; WHEELS AND TIRES	22-1
TIRES, CLEANING OF	22-2
TIRES, REPLACEMENT	22-2

Description	Group-Page
TIRE/WHEEL HOLDDOWN AND FLOOR BRACKETS—XJ, SPARE	23-98
TO USE THIS GROUP, HOW; WIRING DIAGRAMS (XJ)	8W-1
TO USE THIS GROUP, HOW; WIRING DIAGRAMS (XJ-RHD)	8W-1
TO USE THIS GROUP, HOW; WIRING DIAGRAMS (YJ)	8W-1
TOOL, DRB SCAN; BRAKES	5-3
TOOL, DRB SCAN; COOLING SYSTEM	7-5
TOOL, DRB SCAN; EMISSION CONTROL SYSTEMS	25-2
TOOL, DRB SCAN; FUEL SYSTEM	14-54
TOOL, DRB SCAN; IGNITION SYSTEMS	8D-8
TOOLS, TROUBLESHOOTING	8W-4
TOP DOOR—YJ, HALF-METAL SOFT	23-134
TOP LIFTGATE GLASS—YJ, HARD	23-124
TOP QUARTER WINDOW GLASS—YJ, HARD	23-149
TOP REPAIR—YJ, HARD	23-127
TOP ROOF VENT—YJ, HARD	23-127
TOP SERVICE INFORMATION—YJ, SOFT	23-127
TOP SERVICE—YJ, SOFT	23-129
TOP—YJ, HARD	23-126
TORQUE; BATTERY/STARTER/ GENERATOR SERVICE	8B-8
TORQUE; COOLING SYSTEM	7-46
TORQUE; FUEL SYSTEM	14-67
TORQUE; IGNITION SYSTEMS	8D-32
TORQUE CONVERTER	21-167,21-67
TORQUE CONVERTER CLUTCH RELAY	14-65
TORQUE CONVERTER CLUTCH RELAY TEST	14-48
TORQUE CONVERTER CLUTCH RELAY—PCM OUTPUT	14-29
TORQUE CONVERTER CLUTCH (TCC) SOLENOID AND RELAY; FUEL/IGNITION (XJ)	8W-30-4
TORQUE CONVERTER CLUTCH (TCC) SOLENOID AND RELAY; TRANSMISSION CONTROLS (YJ)	8W-31-1
TORQUE CONVERTER CLUTCH (TCC) SOLENOID AND RELAY—2.5L ENGINE ONLY; TRANSMISSION CONTROLS (XJ)	8W-31-1
TORQUE CONVERTER DIAGNOSIS	21-86,21-87, 21-88
TORQUE CONVERTER INSTALLATION, TRANSMISSION	21-199
TORQUE CONVERTER REMOVAL, TRANSMISSION	21-198
TORQUE CONVERTER STALL TEST	21-178
TORQUE CONVERTER STATOR CLUTCH INSPECTION	21-199
TORQUE SPECIFICATIONS; CLUTCH	6-17
TORQUE SPECIFICATIONS; ENGINES	9-54,9-95
TORQUE SPECIFICATIONS; EXHAUST SYSTEM AND INTAKE MANIFOLD	11-10
TORQUE SPECIFICATIONS; FRONT SUSPENSION AND AXLE	2-49
TORQUE SPECIFICATIONS; HEATING AND AIR CONDITIONING	24-37
TORQUE SPECIFICATIONS; INTRODUCTION	Intro.-11,Intro.-12
TORQUE SPECIFICATIONS; PROPELLER SHAFTS	16-15
TORQUE SPECIFICATIONS; REAR SUSPENSION AND AXLES	3-51
TORQUE SPECIFICATIONS; STEERING	19-78
TORQUE SPECIFICATIONS, 30RH/32RH	21-336
TORQUE SPECIFICATIONS, AW-4	21-344
TORQUE SPECIFICATIONS, BRAKE	5-70
TORQUE SPECIFICATIONS, MEASUREMENT	Intro.-11
TORQUE SPECIFICATIONS, NP231/NP242	21-344
TORQUE SPECIFICATIONS—ACCESSORIES	23-162
TORQUE SPECIFICATIONS—MANUAL TRANSMISSION	21-333
TORQUE SPECIFICATIONS—XJ VEHICLES	23-161
TORQUE—2.5L	8B-8
TORQUE—4.0L	8B-8
TOUCH-UP, PAINTED SURFACE	23-158
TOW HOOK, REAR	13-9
TOW HOOKS	13-13
TOW HOOKS, FRONT	13-7
TOW, TRAILER; TRAILER TOW (XJ)	8W-54-1
TOW, TRAILER; TRAILER TOW (XJ-RHD)	8W-54-1
TOWING AND HOISTING, JUMP STARTING	0-9
TOWING, FOUR-WHEEL-DRIVE VEHICLE	0-12
TOWING RECOMMENDATIONS	0-10
TOWING SPECIFICATIONS, TRAILER	Intro.-5, Intro.-9
TOWING WHEN KEYS ARE NOT AVAILABLE	0-13
TOWING—XJ, TWO-WHEEL-DRIVE VEHICLE	0-11
(TPS)—PCM INPUT, THROTTLE POSITION SENSOR	14-25
TRACK BAR; FRONT SUSPENSION AND AXLE	2-11,2-15
TRACK BAR; REAR SUSPENSION AND AXLES	3-8
TRAC-LOK DIFFERENTIAL	3-45
TRAILER HITCH	23-77
TRAILER HITCH—XJ	23-77
TRAILER TOW; TRAILER TOW (XJ)	8W-54-1
TRAILER TOW; TRAILER TOW (XJ-RHD)	8W-54-1
TRAILER TOWING SPECIFICATIONS	Intro.-5, Intro.-9
TRANSFER CASE (4WD VEHICLES)	0-24
TRANSFER CASE ASSEMBLY	21-294,21-319
TRANSFER CASE CHANGES	21-307
TRANSFER CASE DISASSEMBLY AND OVERHAUL	21-289,21-310
TRANSFER CASE IDENTIFICATION	21-284, 21-307
TRANSFER CASE INSTALLATION	21-288,21-309
TRANSFER CASE, LEGEND FOR NP231	21-306
TRANSFER CASE, LEGEND FOR NP242	21-332
TRANSFER CASE LUBRICANT AND FILL LEVEL	21-284
TRANSFER CASE, NP231	21-283,21-305
TRANSFER CASE, NP242	21-307,21-331
TRANSFER CASE REMOVAL	21-287,21-309
TRANSFER CASE SKID PLATE	13-15,13-3
TRANSMISSION, 30RH/32RH AUTOMATIC	21-67
TRANSMISSION AND CONVERTER INSTALLATION	21-117
TRANSMISSION AND CONVERTER REMOVAL	21-115
TRANSMISSION AND TORQUE CONVERTER INSTALLATION	21-199
TRANSMISSION AND TORQUE CONVERTER REMOVAL	21-198
TRANSMISSION APPLICATION	21-67
TRANSMISSION ASSEMBLY AND ADJUSTMENT	21-265,21-16,21-52
TRANSMISSION ASSEMBLY AND ADJUSTMENT PROCEDURES	21-155
TRANSMISSION ASSEMBLY TIPS	21-155
TRANSMISSION, AUTOMATIC	0-23
TRANSMISSION, AW-4 AUTOMATIC	21-165
TRANSMISSION, AX 15 MANUAL	21-33
TRANSMISSION, AX 4/5 MANUAL	21-1
TRANSMISSION CASE CLEANING AND INSPECTION	21-125
TRANSMISSION CASE OVERHAUL, FIRST-REVERSE BRAKE PISTON	21-247
TRANSMISSION CHANGES AND PARTS INTERCHANGEABILITY	21-67
TRANSMISSION COMFORT SWITCH; TRANSMISSION CONTROLS (XJ-RHD)	8W-31-1
TRANSMISSION CONTROL MODULE; TRANSMISSION CONTROLS (XJ-RHD)	8W-31-1
TRANSMISSION CONTROL MODULE (TCM) SERVICE	21-183
TRANSMISSION CONTROL MODULE—4.0L ENGINE ONLY; TRANSMISSION CONTROLS (XJ)	8W-31-1
TRANSMISSION CONTROLS AND COMPONENTS	21-67
TRANSMISSION COOLER FLOW TESTING	21-113
TRANSMISSION COOLER LINE AND FITTING SERVICE	21-111
TRANSMISSION COOLER LINE FITTINGS	21-197
TRANSMISSION COOLER REVERSE FLUSHING	21-114
TRANSMISSION COOLER SERVICE	21-196
TRANSMISSION DIAGNOSIS	21-78,21-79,21-80, 21-81,21-82,21-83,21-84,21-85
TRANSMISSION DIAGNOSIS, 30RH/32RH	21-70
TRANSMISSION DIAGNOSIS, AW-4	21-176
TRANSMISSION DISASSEMBLY	21-119,21-201
TRANSMISSION DISASSEMBLY AND OVERHAUL	21-37,21-5
TRANSMISSION GEAR RATIOS	21-34
TRANSMISSION IDENTIFICATION	21-166,21-33, 21-67,21-2
TRANSMISSION INSTALLATION	21-36,21-5
TRANSMISSION LUBRICANT	21-34
TRANSMISSION, MANUAL	0-22
TRANSMISSION OIL COOLERS	7-36
TRANSMISSION OVERHAUL, 30RH/32RH	21-119
TRANSMISSION OVERHAUL, AW-4	21-201
TRANSMISSION RANGE LAMP; INTERIOR LIGHTING (YJ)	8W-44-1
TRANSMISSION RANGES AND SHIFT LEVER POSITIONS	21-166
TRANSMISSION REMOVAL	21-35,21-3
TRANSMISSION REMOVAL AND INSTALLATION, 30RH/32RH	21-115
TRANSMISSION REMOVAL AND INSTALLATION, AW-4	21-198
TRANSMISSION SHIFT PATTERN	21-34
TRANSMISSION SHIFTER/IGNITION INTERLOCK MECHANISM, AUTOMATIC	19-55
TRANSMISSION SWITCH AND PLUG LOCATIONS	21-34
TRANSMISSION THROTTLE CABLE ADJUSTMENT	21-194
TRANSMISSION THROTTLE CABLE REPLACEMENT	21-193
TRANSMISSION THROTTLE VALVE CABLE ADJUSTMENT	21-71
TRANSMISSION, TORQUE SPECIFICATIONS—MANUAL	21-333
TRANSMISSION UP-SHIFT LAMP, MANUAL; INSTRUMENT CLUSTER (XJ)	8W-40-2
TRANSMISSION VALVE BODY INSTALLATION	21-187
TRANSMISSION VALVE BODY OVERHAUL	21-250
TRANSMISSION VALVE BODY REMOVAL	21-186
TRANSMISSION VALVE BODY SOLENOIDS	21-184
TRANSMISSION/TRANSFER CASE IDENTIFICATION, ENGINE	Intro.-5
TRANSMISSION/TRANSFER CASE SPECIFICATIONS	21-333
TRANSMIT—PCM OUTPUT, SCI	14-29
TRANSMITTER, KEYLESS ENTRY	8P-1,8P-7,8P-8
TRAVEL SENSOR, BRAKE PEDAL; ANTI-LOCK BRAKES (YJ)	8W-32-1
TRAY LAMP—XJ, I/P ASH RECEIVER	23-80
TRAY—XJ, BATTERY	23-14
TRAY—YJ, BATTERY	23-110
TREAD WEAR INDICATORS	22-3
TRIM COVERS—XJ, B/C-PILLAR AND LIFTGATE PILLAR	23-88
TRIM PANEL EXTENSION—XJ, QUARTER	23-87
TRIM PANEL—XJ, DOOR	23-31
TRIM PANEL—XJ, FRONT INNER SCUFF PLATE/COWL SIDE	23-86
TRIM PANEL—XJ, LIFTGATE	23-59
TRIM PANEL—YJ, FULL-METAL DOOR	23-137
TRIM PANELS AND SCUFF PLATES—XJ, INTERIOR	23-84
TRIM PANELS—XJ, QUARTER AND WHEELHOUSE	23-87
TRIM REPAIR PRODUCTS—XJ, AFTERMARKET PAINT	23-159
TRIM REPAIR PRODUCTS—YJ, AFTERMARKET PAINT	23-160
TROUBLE CODE (DTC), DIAGNOSTIC	14-54
TROUBLE CODE, GENERATOR DIAGNOSTIC	8A-22
TROUBLE CODE, SPEED CONTROL DIAGNOSTIC	8H-5
TROUBLE DIAGNOSIS—XJ, DOME/ COURTESY LAMP	8L-16
TROUBLE DIAGNOSIS—XJ, HEADLAMP DELAY FUNCTION	8L-14
TROUBLE DIAGNOSIS—XJ, LIGHTED VANITY MIRROR	8L-16
TROUBLE DIAGNOSIS—YJ, DOME/ COURTESY LAMP	8L-31
TROUBLESHOOTING TESTS; WIRING DIAGRAMS—GENERAL INFORMATION (XJ)	8W-4

Description	Group-Page
TROUBLESHOOTING TOOLS; WIRING DIAGRAMS—GENERAL INFORMATION (XJ)	8W-4
TROUBLESHOOTING WIRING PROBLEMS; WIRING DIAGRAMS—GENERAL INFORMATION (XJ)	8W-5
TUBE AXLE (2WD), MODEL 30 AXLE	2-22
TUBE CAP, FUEL TANK FILLER; EMISSION CONTROL SYSTEMS	25-4,25-7
TUBE CAP, FUEL TANK FILLER; FUEL SYSTEM	14-13
TUBE, NO-LEAD FUEL TANK FILLER	14-13
TUBES/LINES/HOSES AND CLAMPS, FUEL	14-62,14-9
TURN RELAY, LEFT; TRAILER TOW (XJ)	8W-54-1
TURN RELAY, LEFT; TRAILER TOW (XJ-RHD)	8W-54-1
TURN RELAY, RIGHT; TRAILER TOW (XJ)	8W-54-1
TURN RELAY, RIGHT; TRAILER TOW (XJ-RHD)	8W-54-1
TURN SIGNAL INDICATOR LAMPS; INSTRUMENT CLUSTER (XJ)	8W-40-2
TURN SIGNAL INDICATOR LAMPS; INSTRUMENT CLUSTER (XJ-RHD)	8W-40-2
TURN SIGNAL RELAY; TURN SIGNALS (XJ-RHD)	8W-52-1
TURN SIGNAL SYSTEM	8J-1
TURN SIGNAL SYSTEM - YJ	8J-3
TURN SIGNAL/HAZARD WARNING SWITCH REMOVE/INSTALL - YJ	8J-5
TURN SIGNAL/HAZARD WARNING SYSTEM - XJ	8J-3
TURN SIGNALS; TURN SIGNALS (YJ)	8W-52-1
TURN SIGNAL/TAIL LAMP BULB REPLACEMENT—XJ, BACK-UP/REAR	8L-12
TURN SIGNAL/TAIL LAMP BULB REPLACEMENT—YJ, BACK-UP/REAR	8L-28
TWO-WHEEL-DRIVE VEHICLE TOWING—XJ	0-11
U-JOINTS, PROPELLER SHAFTS	16-15
UNBALANCE	16-3
UNDERHOOD LAMP; INTERIOR LIGHTING (XJ)	8W-44-2
UNDERHOOD LAMP; INTERIOR LIGHTING (XJ-RHD)	8W-44-1
UNDERHOOD LAMP; INTERIOR LIGHTING (YJ)	8W-44-1
UNDERHOOD LAMP BULB REPLACEMENT—XJ	8L-13
UNDERHOOD LAMP BULB REPLACEMENT—YJ	8L-29
UNDERHOOD LAMP REPLACEMENT—XJ	8L-13
UNDERHOOD LAMP REPLACEMENT—YJ	8L-29
UNDERHOOD LAMP SERVICE INFORMATION—XJ	8L-12
UNDERHOOD LAMP SERVICE INFORMATION—YJ	8L-28
UNIT (ECU), ELECTRONIC CONTROL	5-34
UNIT, FUEL GAUGE SENDING	14-16
UNIT (HCU), HYDRAULIC CONTROL	5-33
UNIT, HYDRAULIC CONTROL; ANTI-LOCK BRAKES (XJ)	8W-32-2
UNIT, HYDRAULIC CONTROL; ANTI-LOCK BRAKES (XJ-RHD)	8W-32-2
UNIT, HYDRAULIC CONTROL; ANTI-LOCK BRAKES (YJ)	8W-32-2
UNIVERSAL JOINT ANGLE MEASUREMENT	16-4
UNIVERSAL JOINT REPLACEMENT	16-10
UNIVERSAL JOINTS	16-2
UNLOCK RELAY; POWER DOOR LOCKS (XJ)	8W-61-1
UNLOCK RELAY; POWER DOOR LOCKS (XJ-RHD)	8W-61-1
UPPER SUSPENSION ARM	2-12
UPSHIFT LAMP; FUEL/IGNITION (XJ)	8W-30-5
UP-SHIFT LAMP; INSTRUMENT CLUSTER (YJ)	8W-40-2
UPSHIFT LAMP; TRANSMISSION CONTROLS (XJ)	8W-31-1
UPSHIFT LAMP; TRANSMISSION CONTROLS (YJ)	8W-31-1
UP-SHIFT LAMP, MANUAL TRANSMISSION; INSTRUMENT CLUSTER (XJ)	8W-40-2
USAGE, INSTALLATION METHODS AND PARTS	6-4
USAGE STATEMENT, FUEL	14-1
USAGE STATEMENT—GAS ENGINES, FUEL	0-19
USE THIS GROUP, HOW TO; WIRING DIAGRAMS (XJ)	8W-1
USE THIS GROUP, HOW TO; WIRING DIAGRAMS (XJ-RHD)	8W-1
USE THIS GROUP, HOW TO; WIRING DIAGRAMS (YJ)	8W-1
USING ALIGNMENT SCREEN—XJ, HEADLAMP/FOG LAMP ADJUSTMENT	8L-7
USING ALIGNMENT SCREEN—YJ, HEADLAMP/FOG LAMP ADJUSTMENT	8L-23
USING ON-BOARD DIAGNOSTIC SYSTEM; BATTERY/STARTING/CHARGING SYSTEMS DIAGNOSTICS	8A-22
USING ON-BOARD DIAGNOSTIC SYSTEM; VEHICLE SPEED CONTROL SYSTEM	8H-5
VACUUM DISCONNECT AXLE—YJ VEHICLES	2-27
VACUUM HOSE ROUTING SCHEMATICS	25-2
VACUUM MOTOR, FRESH AIR DOOR	24-34
VACUUM MOTOR REPLACEMENT, A/C RECIRCULATING DOOR	24-27
VACUUM MOTOR REPLACEMENT, HEATER/DEFROSTER/INSTRUMENT PANEL OUTLET	24-26
VACUUM RESERVOIR	8H-1
VACUUM RESERVOIR REMOVE/INSTALL	8H-10
VACUUM ROUTING SCHEMATIC—2.5L 4 CYLINDER ENGINE	25-3
VACUUM ROUTING SCHEMATIC—4.0L 6 CYLINDER ENGINE	25-3
VACUUM SUPPLY TEST	8H-6
VACUUM TEST, POWER BOOSTER	5-9
VALUES, CONVERSION FORMULAS AND EQUIVALENT	Intro.-11
VALVE AND SPRING IDENTIFICATION, AW-4	21-343
VALVE BODY ASSEMBLY AND ADJUSTMENT	21-153
VALVE BODY CHECK BALL DIMENSIONS, AW-4	21-341
VALVE BODY DISASSEMBLY AND INSPECTION	21-147
VALVE BODY INSTALLATION, TRANSMISSION	21-187
VALVE BODY OVERHAUL, TRANSMISSION	21-250
VALVE BODY REMOVAL, TRANSMISSION	21-186
VALVE BODY SERVICE	21-104
VALVE BODY SOLENOIDS, TRANSMISSION	21-184
VALVE CABLE ADJUSTMENT, TRANSMISSION THROTTLE	21-71
VALVE CABLE ADJUSTMENT (XJ/YJ), THROTTLE	21-101
VALVE COMPONENT REPLACE—CYLINDER HEAD NOT REMOVED	9-23,9-65
VALVE, EXPANSION	24-31,24-35
VALVE FITTING O-RING SEAL, FLOW CONTROL	19-14
VALVE, FUEL TANK PRESSURE RELIEF/ROLLOVER	14-16,14-62
VALVE INSTALLATION (WITH ABS), MASTER CYLINDER AND COMBINATION	5-20
VALVE, MASTER CYLINDER—COMBINATION	5-15
VALVE, PRESSURE RELIEF/ROLLOVER	25-6,25-7
VALVE REMOVAL (WITH ABS), MASTER CYLINDER AND COMBINATION	5-17
VALVE REPLACEMENT (NON-ABS), COMBINATION	5-16
VALVE SERVICE, CONVERTER DRAINBACK CHECK	21-113
VALVE SHAFT OVERHAUL, MANUAL	21-215
VALVE SHAFT SEAL REPLACEMENT, MANUAL	21-187
VALVE SPRINGS AND OIL SEALS	9-23
VALVE SPRINGS, VALVES	9-27,9-69
VALVE STEM SEAL AND SPRING REPLACEMENT	9-65
VALVE TEST, POWER BOOSTER CHECK	5-9
VALVE TIMING	9-30,9-71
VALVES AND VALVE SPRINGS	9-27,9-69
VANITY MIRROR LAMPS, VISOR; INTERIOR LIGHTING (XJ)	8W-44-2
VANITY MIRROR LAMPS, VISOR; INTERIOR LIGHTING (XJ-RHD)	8W-44-1
VANITY MIRROR TROUBLE DIAGNOSIS—XJ, LIGHTED	8L-16
VANITY MIRROR—XJ, LIGHTED	8L-16
VARIANCE, PINION GEAR DEPTH; FRONT SUSPENSION AND AXLE	2-40
VARIANCE, PINION GEAR DEPTH; REAR SUSPENSION AND AXLES	3-22,3-39
VARIATION ADJUSTMENT, COMPASS	8C-5
VARIATION, DISC BRAKE ROTOR THICKNESS	5-52
VEHICLE CODE DECODING	Intro.-5
VEHICLE CODE DESIGNATIONS	Intro.-1
VEHICLE CODE PLATE	Intro.-4
VEHICLE CONTROL AND DISPLAY SYMBOLS	Intro.-10
VEHICLE CONTROL AND DISPLAY SYMBOLS, INTERNATIONAL	Intro.-5
VEHICLE DESIGNATIONS	Intro.-1
VEHICLE DIMENSION DATA	Intro.-5,Intro.-6
VEHICLE EMISSION CONTROL INFORMATION (VECI) LABEL	25-1
VEHICLE, GEAR ADJUSTMENTS IN	19-39
VEHICLE IDENTIFICATION NUMBER (VIN) DECODING	Intro.-4
VEHICLE IDENTIFICATION NUMBER (VIN) PLATE	Intro.-4
VEHICLE, LABELS AND PLATES—XJ	Intro.-2
VEHICLE, LABELS AND PLATES—YJ	Intro.-3
VEHICLE LOAD DATA	Intro.-5
VEHICLE LOAD DATA—XJ	Intro.-7
VEHICLE LOAD DATA—YJ	Intro.-8
VEHICLE SAFETY CERTIFICATION LABEL	Intro.-4
VEHICLE SPEED CONTROL; VEHICLE SPEED CONTROL (XJ)	8W-33-1
VEHICLE SPEED CONTROL; VEHICLE SPEED CONTROL (XJ-RHD)	8W-33-1
VEHICLE SPEED SENSOR; FUEL SYSTEM	14-66
VEHICLE SPEED SENSOR; FUEL/IGNITION (XJ)	8W-30-2
VEHICLE SPEED SENSOR; FUEL/IGNITION (YJ)	8W-30-3
VEHICLE SPEED SENSOR; VEHICLE SPEED CONTROL SYSTEM	8H-1,8H-5
VEHICLE SPEED SENSOR; FUEL/IGNITION (XJ-RHD)	8W-30-2
VEHICLE SPEED SENSOR TEST	14-48
VEHICLE SPEED SENSOR—PCM INPUT	14-25
VEHICLE TOWING, FOUR-WHEEL-DRIVE	0-12
VEHICLE TOWING—XJ, TWO-WHEEL-DRIVE	0-11
VEHICLE VIBRATION	22-10
VENT DOOR CONTROL CABLES	24-32
VENT WINDOW GLASS—XJ, REAR QUARTER	23-73
VENT WINDOW GLASS—YJ, FULL-METAL DOOR	23-137
VENTILATION SYSTEM, CRANKCASE; EMISSION CONTROL SYSTEMS	25-5
VENTILATION SYSTEM, CRANKCASE; LUBRICATION AND MAINTENANCE	0-19
VENT—YJ, HARD TOP ROOF	23-127
VIBRATION; FRONT SUSPENSION AND AXLE	2-19
VIBRATION; PROPELLER SHAFTS	16-3
VIBRATION; REAR SUSPENSION AND AXLES	3-10
VIBRATION DAMPER	9-30,9-72
VIBRATION DIAGNOSIS	22-10,22-11
VIBRATION, DRIVELINE	16-3
VIBRATION, TIRE NOISE OR	22-4
VIBRATION TYPES	22-10
VIBRATION, VEHICLE	22-10
VISCOUS FAN DRIVE	7-34
VISOR VANITY MIRROR LAMPS; INTERIOR LIGHTING (XJ)	8W-44-2
VISOR VANITY MIRROR LAMPS; INTERIOR LIGHTING (XJ-RHD)	8W-44-1
VISUAL INSPECTION	14-35
VOLTAGE, OPEN CIRCUIT	8A-6
VOLTAGE SPECIFICATIONS, OUTPUT	8A-23
VOLTAGE—PCM INPUT, BATTERY	14-21
WARNING LAMP, ABS; ANTI-LOCK BRAKES (XJ)	8W-32-2

Description	Group-Page
WARNING LAMP, ABS; ANTI-LOCK BRAKES (XJ-RHD)	8W-32-2
WARNING LAMP, ABS; ANTI-LOCK BRAKES (YJ)	8W-32-2
WARNING LAMP, ABS; INSTRUMENT CLUSTER (XJ)	8W-40-2
WARNING LAMP, ABS; INSTRUMENT CLUSTER (XJ-RHD)	8W-40-2
WARNING LAMP, ABS; INSTRUMENT CLUSTER (YJ)	8W-40-2
WARNING LAMP, BRAKE; INSTRUMENT CLUSTER (XJ)	8W-40-2
WARNING LAMP, BRAKE; INSTRUMENT CLUSTER (XJ-RHD)	8W-40-2
WARNING LAMP, BRAKE; INSTRUMENT CLUSTER (YJ)	8W-40-2
WARNING LAMP, ENGINE COOLANT TEMPERATURE; INSTRUMENT CLUSTER (XJ)	8W-40-1
WARNING LAMP, ENGINE COOLANT TEMPERATURE; INSTRUMENT CLUSTER (XJ-RHD)	8W-40-1
WARNING LAMP, LOW FUEL; INSTRUMENT CLUSTER (XJ)	8W-40-1
WARNING LAMP, LOW WASHER FLUID; INSTRUMENT CLUSTER (XJ)	8W-40-2
WARNING LAMP, LOW WASHER FLUID; INSTRUMENT CLUSTER (XJ-RHD)	8W-40-2
WARNING LAMP, OIL PRESSURE; INSTRUMENT CLUSTER (XJ)	8W-40-2
WARNING LAMP, OIL PRESSURE; INSTRUMENT CLUSTER (XJ-RHD)	8W-40-1
WARNING LAMP, SEAT BELT INDICATOR; INSTRUMENT CLUSTER (XJ)	8W-40-2
WARNING LAMP, SEAT BELT INDICATOR; INSTRUMENT CLUSTER (XJ-RHD)	8W-40-2
WARNING LIGHT DISPLAY, ABS	5-3
WARNING LIGHT OPERATION, BRAKE	5-5
WARNING LIGHT, SYSTEM	5-35
WARNING LIGHTS, BRAKE	5-1
WARNING SWITCH REMOVE/INSTALL - YJ, TURN SIGNAL/HAZARD	8J-5
WARNING SYSTEM - XJ, TURN SIGNAL/HAZARD	8J-3
WARNING SYSTEM - YJ, HAZARD	8J-4
WARNING SYSTEM, HAZARD	8J-1
WARNINGS	24-9
WARNINGS, CAUTIONS AND SERVICE PRECAUTIONS	24-9
WARNINGS, NOTES, CAUTIONS; WIRING DIAGRAMS—GENERAL INFORMATION (XJ)	8W-1
WARNINGS, SAFETY PRECAUTIONS	13-10
WASHER FLUID WARNING LAMP, LOW; INSTRUMENT CLUSTER (XJ)	8W-40-2
WASHER FLUID WARNING LAMP, LOW; INSTRUMENT CLUSTER (XJ-RHD)	8W-40-2
WASHER NOZZLE REMOVE/INSTALL, LIFTGATE	8K-24
WASHER PUMP REMOVE/INSTALL	8K-24
WASHER PUMP/RESERVOIR REMOVE/ INSTALL	8K-8
WASHER SYSTEM, LIFTGATE	8K-5
WASHER SYSTEM, WINDSHIELD	8K-10,8K-12, 8K-1,8K-4
WASHER/THRUST PLATE SPECIFICATIONS, 30RH/32RH SNAP RING/THRUST	21-335
WATER LEAK DETECTION AND REPAIR—XJ, STATIONARY GLASS	23-76
WATER LEAK DETECTION AND REPAIR—YJ, STATIONARY GLASS	23-150
WATER PUDDLES, BRAKES DO NOT HOLD AFTER DRIVING THROUGH DEEP	5-7
WATER PUMP TESTS	7-13
WATER PUMPS—GENERAL INFORMATION	7-13
WATER PUMPS—REMOVAL/ INSTALLATION	7-14
WATERDAM—YJ, FULL-METAL DOOR	23-137
WEAR COMPENSATION, CALIPER OPERATION	5-45
WEAR INDICATORS, TREAD	22-3
WEAR LIMITS, AW-4 OIL PUMP	21-338
WEAR PATTERNS, TIRE	22-4
WEATHERSTRIP SEAL REPLACEMENT—YJ, DOOR	23-142
WEATHERSTRIP SEAL REPLACEMENT—YJ, LIFTGATE GLASS	23-125
WEATHERSTRIP SEAL/CROSSMEMBER AIR DEFLECTOR—XJ, COWL	23-11
WEATHERSTRIP SEAL—XJ, LIFTGATE OPENING	23-64
WEATHERSTRIP SEAL—YJ, COWL	23-109
WEATHERSTRIP SEAL—YJ, TAILGATE	23-123
WEATHERSTRIP SEAL—YJ, WINDSHIELD FRAME	23-146
WEATHERSTRIP SEALS—XJ, DOOR WINDOW GLASS AND DOOR OPENING	23-55
WEATHERSTRIP SEALS—YJ, FULL-METAL DOOR	23-141
WET SANDING,BUFFING AND POLISHING	23-158
WHEEL ALIGNMENT, FRONT	2-5
WHEEL AND TIRE PROBLEMS	5-7
WHEEL BALANCE, TIRE	22-6
WHEEL BEARING LUBRICANTS, CHASSIS COMPONENT	0-28
WHEEL BEARINGS, FRONT	0-28
WHEEL CYLINDER INSTALLATION	5-58
WHEEL CYLINDER OVERHAUL	5-57
WHEEL CYLINDER REMOVAL	5-57
WHEEL INSTALLATION	22-6
WHEEL LUG NUT	22-12
WHEEL NUT TIGHTENING	5-54,5-59
WHEEL ORNAMENTATION	22-6
WHEEL REPLACEMENT	22-6
WHEEL RUNOUT, TIRE	22-8
WHEEL SENSOR INSTALLATION AND ADJUSTMENT, REAR	5-38
WHEEL SENSOR INSTALLATION, FRONT	5-38
WHEEL SENSOR REMOVAL, FRONT	5-38
WHEEL SENSOR REMOVAL, REAR	5-38
WHEEL SPEED SENSOR OPERATION	5-37
WHEEL SPEED SENSORS; ANTI-LOCK BRAKES (XJ)	8W-32-1
WHEEL SPEED SENSORS; ANTI-LOCK BRAKES (XJ-RHD)	8W-32-1
WHEEL SPEED SENSORS; ANTI-LOCK BRAKES (YJ)	8W-32-1
WHEEL SPEED SENSORS; BRAKES	5-34
WHEEL, STEERING	19-49,19-58
WHEELHOUSE FLARES AND LINERS—XJ, REAR	23-19
WHEELHOUSE SPLASH LINERS—YJ	23-115
WHEELHOUSE TRIM PANELS—XJ, QUARTER	23-87
WHEELS	22-6
WHEEL/TIRE SIZE AND INPUT SIGNALS	5-3
WHEN KEYS ARE NOT AVAILABLE, TOWING	0-13
WINDOW APPLIQUE—XJ, QUARTER	23-25
WINDOW EXTERIOR MOLDINGS—XJ, DOOR	23-54
WINDOW GLASS AND DOOR OPENING WEATHERSTRIP SEALS—XJ, DOOR	23-55
WINDOW GLASS GRID, REAR	8N-1,8N-2
WINDOW GLASS GRID REPAIRS, REAR	8N-3
WINDOW GLASS REGULATOR HANDLE—YJ, FULL-METAL DOOR	23-136
WINDOW GLASS REGULATOR—XJ, FRONT DOOR	23-42
WINDOW GLASS REGULATOR—XJ, REAR DOOR	23-44
WINDOW GLASS REGULATOR—YJ, FULL-METAL DOOR	23-138
WINDOW GLASS, STATIONARY	23-66
WINDOW GLASS—XJ, FRONT DOOR	23-43
WINDOW GLASS—XJ, LIFTGATE	23-74
WINDOW GLASS—XJ, REAR DOOR	23-45
WINDOW GLASS—XJ, REAR DOOR STATIONARY	23-46
WINDOW GLASS—XJ, REAR QUARTER VENT	23-73
WINDOW GLASS—YJ, FULL-METAL DOOR	23-139
WINDOW GLASS—YJ, FULL-METAL DOOR VENT	23-137
WINDOW GLASS—YJ, HARD TOP QUARTER	23-149
WINDOW GLASS/REAR QUARTER PLASTIC INSERT—XJ, REAR QUARTER	23-73
WINDOW, HEATED REAR; HEATED REAR WINDOW (XJ)	8W-48-1
WINDOW, HEATED REAR; HEATED REAR WINDOW (XJ-RHD)	8W-48-1
WINDOW, HEATED REAR; HEATED REAR WINDOW (YJ)	8W-48-1
WINDOW MOTOR, POWER	8S-1,8S-2
WINDOW MOTOR REMOVE/INSTALL, POWER	8S-7
WINDOW SWITCH, PASSENGER'S POWER	8S-6
WINDOW SWITCH, POWER	8S-1,8S-2
WINDOW SWITCH REMOVE/INSTALL, POWER	8S-7
WINDOW SWITCH—2-DOOR (LHD), DRIVER'S POWER	8S-4
WINDOW SWITCH—2-DOOR (RHD), DRIVER'S POWER	8S-5
WINDOW SWITCH—4-DOOR, DRIVER'S POWER	8S-3
WINDOWS, POWER; POWER WINDOWS (XJ)	8W-60-1
WINDOWS, POWER; POWER WINDOWS (XJ-RHD)	8W-60-1
WINDSHIELD FRAME WEATHERSTRIP SEAL—YJ	23-146
WINDSHIELD FRAME—YJ	23-145
WINDSHIELD GLASS REPLACEMENT—XJ	23-69
WINDSHIELD GLASS—YJ	23-146
WINDSHIELD REVEAL MOLDING—XJ	23-66
WINDSHIELD REVEAL MOLDING—YJ	23-144
WINDSHIELD SERVICE INFORMATION	23-68
WINDSHIELD SIDE MOLDING—XJ	23-86
WINDSHIELD WASHER SYSTEM	8K-10,8K-12, 8K-1,8K-4
WINDSHIELD WIPER ARM REMOVE/ INSTALL	8K-17
WINDSHIELD WIPER BLADE REMOVE/ INSTALL	8K-17
WINDSHIELD WIPER LINKAGE AND PIVOTS REMOVE/INSTALL	8K-17
WINDSHIELD WIPER MOTOR REMOVE/ INSTALL	8K-19,8K-6
WINDSHIELD WIPER SYSTEM	8K-10,8K-12, 8K-1,8K-3
WINDSHIELD WIPER/WASHER SWITCH	8K-13, 8K-4
WINDSHIELD WIPER/WASHER SWITCH REMOVE/INSTALL	8K-20,8K-7
WIPE MODULE, INTERMITTENT	8K-4
WIPE SWITCH TESTING, INTERMITTENT	8K-15
WIPE SWITCH TESTING, NON-INTERMITTENT	8K-14
WIPER ARM REMOVE/INSTALL, LIFTGATE	8K-17
WIPER ARM REMOVE/INSTALL, WINDSHIELD	8K-17
WIPER BLADE REMOVE/INSTALL, WINDSHIELD	8K-17
WIPER LINKAGE AND PIVOTS REMOVE/INSTALL, WINDSHIELD	8K-17
WIPER MOTOR REMOVE/INSTALL, LIFTGATE	8K-20,8K-6
WIPER MOTOR REMOVE/INSTALL, WINDSHIELD	8K-19,8K-6
WIPER SYSTEM, LIFTGATE	8K-4
WIPER SYSTEM, REAR; WIPERS (XJ)	8W-53-1
WIPER SYSTEM, REAR; WIPERS (XJ-RHD)	8W-53-1
WIPER SYSTEM, REAR; WIPERS (YJ)	8W-53-1
WIPER SYSTEM, WINDSHIELD	8K-10,8K-12, 8K-1,8K-3
WIPERS, INTERMITTENT; WIPERS (XJ-RHD)	8W-53-1
WIPERS, STANDARD; WIPERS (XJ-RHD)	8W-53-1
WIPERS—INTERMITTENT; WIPERS (XJ)	8W-53-1
WIPERS—INTERMITTENT; WIPERS (YJ)	8W-53-1
WIPERS—STANDARD; WIPERS (XJ)	8W-53-1
WIPERS—STANDARD; WIPERS (YJ)	8W-53-1
WIPER/WASHER SWITCH, LIFTGATE	8K-16,8K-5
WIPER/WASHER SWITCH REMOVE/ INSTALL, LIFTGATE	8K-24,8K-8
WIPER/WASHER SWITCH REMOVE/ INSTALL, WINDSHIELD	8K-20,8K-7
WIPER/WASHER SWITCH, WINDSHIELD	8K-13, 8K-4
WIPER/WASHER SYSTEM, LIFTGATE	8K-10, 8K-16,8K-1
WIRE CODE IDENTIFICATION; WIRING DIAGRAMS—GENERAL INFORMATION (XJ)	8W-1

Description	Group-Page	Description	Group-Page	Description	Group-Page
WIRING PROBLEMS, TROUBLESHOOTING; WIRING DIAGRAMS—GENERAL INFORMATION (XJ)	8W-5				
WIRING REPAIR	8W-6				
WORM SHAFT REPLACEMENT, RACK PISTON	19-32				
WORN THREADS, REPAIR DAMAGED OR	9-4				